T-Mobile

Technology Associates

WELLER KING/FUJISADA CONDOS

510 6TH AVE S
SEATTLE, WA 98104

SITE NUMBER: SE03494E

LATITUDE 47° 35' 52.61" N (47.597948) **LONGITUDE 122° 19' 32.80" W (-122.325779)**

RFDS: VER: 1
PROJECT: CELL SPLIT

GENERAL LOCATION MAP

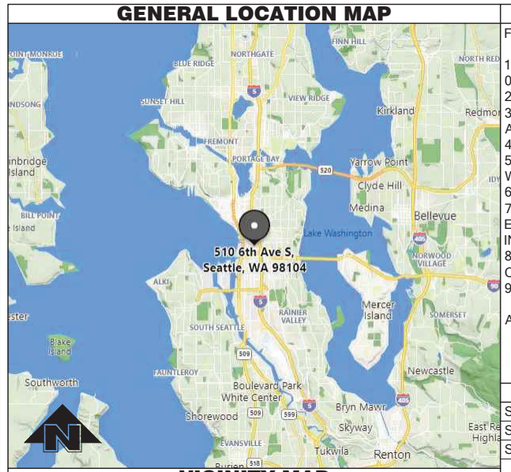

VICINITY MAP

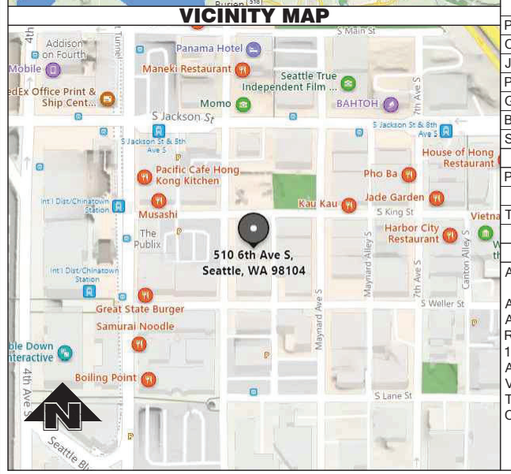

DRIVING DIRECTIONS

FROM T-MOBILE BOTHELL 4 OFFICE:

1. DEPART AND HEAD SOUTH ON N CREEK PKWY 0.3 MI
2. TURN RIGHT ONTO NE 195TH ST 0.3 MI
3. TAKE THE RAMP ON THE LEFT FOR I-405 SOUTH AND HEAD TOWARD RENTON 0.3 MI
4. MERGE ONTO I-405 S 9.0 MI
5. AT EXIT 14, HEAD RIGHT ON THE RAMP FOR WA-520 WEST TOWARD SEATTLE 6.8 MI
6. TAKE THE RAMP FOR I-5 S 2.7 MI
7. AT EXIT 164, HEAD RIGHT ON THE RAMP FOR I-90 EAST TOWARD CITY CENTER / DUWAMISH INDUSTRIAL AREA 0.9 MI
8. TURN RIGHT ONTO S DEARBORN ST TOWARD CITY CENTER / DUWAMISH INDUSTRIAL AREA 0.3 MI
9. TURN RIGHT ONTO 6TH AVE S 0.2 MI

ARRIVE AT 510 6TH AVE S, SEATTLE, WA 98104

ZONING INFORMATION

SITE NUMBER:	SE03494E
SITE NAME:	WELLER KING/FUJISADA CONDOS
SITE ADDRESS:	510 6TH AVE S SEATTLE, WA 98104
PARCEL #:	2662650000
CURRENT ZONING:	IDM-75-86
JURISDICTION:	CITY OF SEATTLE
PARCEL AREA:	TBD
GOV CODE:	2018 IBC, STANDARDS & AMENDMENTS, WAC 51-50
BUILDING TYPE:	--
SITE TYPE:	UNSTAFFED TELECOMM FACILITY

UTILITY PURVEYOR

POWER COMPANY:	SEATTLE CITY LIGHT
TELCO COMPANY:	CENTURYLINK

LEGAL DESCRIPTION

ABBREVIATED PER ASSESSOR RECORDS.

ALL UNITS OF FUJISADA, A CONDOMINIUM, ACCORDING TO THE DECLARATION THEREOF RECORDED UNDER RECORDING NUMBER 19990927002088, AND ANY AMENDMENTS THERETO, AND SURVEY MAP AND PLANS RECORDED IN VOLUME 159 OF CONDOMINIUMS, PAGES 19 THROUGH 25, INCLUSIVE, RECORDS OF KING COUNTY, WASHINGTON.

PROJECT TEAM

PROPERTY OWNER:	FUJISADA, A CONDOMINIUM
PROJECT MANAGER:	TAEC BARBARA CHANEY 9725 THIRD AVE NE, SUITE 410 SEATTLE, WA 98115 PHONE: (206) 310-0477 barbara.chaney@taec.net
CONSTRUCTION MANAGER:	TAEC KEVIN KITCH 9725 THIRD AVE NE, SUITE 410 SEATTLE, WA 98115 PHONE: (425) 306-3909 kevin.kitch@taec.net
SITE ACQUISITION:	TAEC STEVEN KOPELMAN 9725 THIRD AVE NE, SUITE 410 SEATTLE, WA 98115 PHONE: (770) 463-0463 steven.kopelman@taec.net
ZONING:	TAEC CHRIS DEVOIST 9725 THIRD AVE NE, SUITE 410 SEATTLE, WA 98115 PHONE: (206) 949-3321 chris.devoist@taec.net
SURVEYOR:	DUNCANSON COMPANY 145 SW 155TH STREET, SUITE 102 SEATTLE, WA 98166 PHONE: (206) 244-4141
CONSULTING ENGINEER:	B.J. THOMAS, P.E. 7607 80TH AVE NE MARYSVILLE, WA 98270 PHONE: 206-851-1106 bjthomas@bjthomaspe.comcastbiz.net

PROJECT DESCRIPTION

T-MOBILE PROPOSES TO CONSTRUCT AN UNSTAFFED TELECOMMUNICATIONS FACILITY CONSISTING OF BTS EQUIPMENT LOCATED ON (P) 8' x 8' ELEVATED PLATFORM ON BUILDING ROOFTOP & ANTENNAS MOUNTED WITHIN (P) 17'-7" x 9'-8" FRP ANTENNA SCREEN ON (E) STAIRWELL PENTHOUSE.

CODE COMPLIANCE

ALL WORK AND MATERIALS SHALL BE PERFORMED AND INSTALLED IN ACCORDANCE WITH THE CURRENT EDITIONS OF THE FOLLOWING CODES AS ADOPTED BY THE LOCAL GOVERNING AUTHORITIES. NOTHING ON THESE PLANS IS TO BE CONSTRUCTED TO PERMIT WORK NOT CONFORMING TO THESE CODES:
2018 IBC/SBC, STANDARDS & AMENDMENTS, WAC 51-50
2018 IMC, STANDARDS & AMENDMENTS, WAC 51-52
2018 IFC/SFC, STANDARDS & AMENDMENTS, WAC 51-54
2020 NFPA 54 - NATIONAL FUEL GAS CODE (PROPANE INSTALLATIONS ONLY)
2020 NFPA 58 - LIQUEFIED PETROLEUM GAS CODE (PROPANE INSTALLATIONS ONLY)
2018 INTERNATIONAL FIRE CODE/SEATTLE FIRE CODE
2018 UPC, STANDARDS & AMENDMENTS, WAC 51-56, 51-57
2020 NATIONAL ELECTRICAL CODE
2017 NATIONAL ELECTRIC SAFETY CODE
LOCAL BUILDING CODE ORDINANCES
ANSI / TIA / EIA - 222 - H - 2017
NFPA-101 - LIFE SAFETY CODE
SEATTLE CODE AMENDMENTS THAT APPLY

DRAWING INDEX

T-1	TITLE SHEET & PROJECT DATA
G-1	GENERAL NOTES
A-1	OVERALL SITE PLAN
A-1.1	ENLARGED SITE PLAN
A-2 TO A-2.5	EXISTING & PROPOSED SITE ELEVATIONS
RF-1	RF DETAILS
RF-1.1	SFP DETAILS
RF-2	RF DETAILS
A-3 & A-3.1	BTS EQUIPMENT DETAILS
A-4 TO A-8	GENERAL DETAILS
SV1	LAND SURVEY (BY OTHERS)
E-1	POWER & TELCO ROUTING
E-1.1	ELECTRICAL SITE PLAN
E-1.2	ELECTRICAL DETAILS
E-1.3 & E-1.4	ELECTRICAL DIAGRAMS
E-2	ELECTRICAL GROUNDING PLAN
E-3	ELECTRICAL GROUNDING DETAILS
S-1 TO S-4	STRUCTURAL DRAWINGS (BY OTHERS)

PROJECT INFORMATION

THIS IS UNSTAFFED AND RESTRICTED EQUIPMENT AND WILL BE USED FOR THE TRANSMISSION OF RADIO SIGNALS FOR THE PURPOSE OF PROVIDING PUBLIC CELLULAR SERVICE.
T-MOBILE CERTIFIES THAT THIS TELEPHONE EQUIPMENT FACILITY WILL BE SERVICED ONLY BY T-MOBILE EMPLOYEES AND THE WORK ASSOCIATED WITH ANY EQUIPMENT CANNOT BE PERFORMED BY HANDICAPPED PERSONS. THIS FACILITY WILL BE FREQUENTED ONLY BY SERVICE PERSONNEL FOR REPAIR PURPOSES. PURSUANT TO THE AMERICANS WITH DISABILITIES ACT (ADA), APPENDIX B SECTION 4.11. (5)(b), THIS FACILITY IS EXEMPT FROM THAT ACT.
NO POTABLE WATER SUPPLY IS TO BE PROVIDED AT THIS LOCATION.
NO WASTE WATER OR SOLID WASTE WILL BE GENERATED AT THIS LOCATION.
T-MOBILE MAINTENANCE CREW (ONE PERSON) WILL MAKE AN AVERAGE OF ONE TRIP PER MONTH AT ONE HOUR PER TRIP.

APPROVAL/SIGN OFF OF CONST DRAWINGS

REVIEWERS SHALL CLEARLY PLACE INITIALS ADJACENT TO EACH REDLINE NOTE AS DRAWINGS ARE BEING REVIEWED.

CONSULTANT GROUP SIGN OFF

LANDLORD'S REPRESENTATIVE:	DATE:
CONSTRUCTION MANAGER:	DATE:
CONSTRUCTION PROJECT MANAGER:	DATE:
PROJECT MANAGER:	DATE:
SITE ACQUISITION:	DATE:
ZONING:	DATE:
RF ENGINEER:	DATE:

T-Mobile

PROJECT INFORMATION:

WELLER KING/FUJISADA CONDOS
SE03494E

510 6TH AVE S
SEATTLE, WA 98104

ISSUED FOR:

BUILDING PERMIT

REVISION HISTORY:

NO.	DATE:	DESCRIPTION:	CHK. BY:
19	5/31/2022	UPDATED STRUCTURAL SHEETS ADDED	BJT
18	5/29/2022	UPDATED STRUCTURAL SHEETS ADDED	BJT
17	5/25/2022	MINOR REV	BJT
16	5/24/2022	MINOR REV	BJT
15	5/18/2022	MINOR REV	BJT
14	5/17/2022	REVISED PER OWNER COMMENTS	BJT
13	5/9/2022	REVISED STRUCTURAL SHEETS ADDED	BJT
12	4/28/2022	MINOR REV	BJT
11	4/27/2022	MINOR REV	BJT
10	4/20/2022	REVISED PER REDLINES	BJT
9	4/8/2022	RELOCATED ANTENNAS, REVISED PER SITE WALK	BJT

PLANS PREPARED BY:

B. J. THOMAS, P.E.
7607 80TH AVE NE
MARYSVILLE, WA 98270
206-851-1106

DRAWN BY:	CHK. BY:
JL	BJ

LICENSURE:

B. J. THOMAS
STATE OF WASHINGTON
REGISTERED PROFESSIONAL ENGINEER
5/31/2022

JURISDICTIONAL APPROVAL:

DRAWING TITLE:

TITLE SHEET

DRAWING NUMBER:

T-1

GENERAL NOTES:

1. DRAWINGS ARE NOT TO BE SCALED, WRITTEN DIMENSIONS TAKE PRECEDENCE, THIS SET OF DOCUMENTS IS INTENDED TO BE USED FOR DIAGRAMMATIC PURPOSED ONLY, UNLESS NOTED OTHERWISE. THE GENERAL CONTRACTOR'S SCOPE OF WORK SHALL INCLUDE FURNISHING ALL MATERIALS, EQUIPMENT, LABOR AND ANY REQUIREMENTS DEEMED NECESSARY TO COMPLETE INSTALLATION AS DESCRIBED IN THE DRAWINGS AND OWNER'S PROJECT MANUAL.

2. THE CONTRACTOR IS RESPONSIBLE FOR ALL DIMENSIONS AND STANDARDIZED DETAILS THAT REQUIRE MODIFICATIONS DUE TO ACTUAL FIELD CONDITIONS AND REQUIREMENTS MUST BE SUBMITTED TO AND APPROVED BY, T-MOBILE WIRELESS REPRESENTATIVE PRIOR TO START OF WORK.

3. PRIOR TO THE SUBMISSION OF BIDS, CONTRACTORS INVOLVED SHALL VISIT THE JOB SITE TO FAMILIARIZE THEMSELVES WITH ALL CONDITIONS AFFECTING THE PROPOSED PROJECT. CONTRACTORS SHALL VISIT THE CONSTRUCTION SITE WITH THE CONSTRUCTION/CONTRACT DOCUMENTS TO VERIFY FIELD CONDITIONS AND CONFIRM THAT THE PROJECT WILL BE ACCOMPLISHED AS SHOWN. PRIOR TO PROCEEDING WITH CONSTRUCTION, ANY ERRORS, OMISSIONS, OR DISCREPANCIES SHALL BE BROUGHT TO THE ATTENTION OF THE ARCHITECT/ENGINEER VERBALLY AND IN WRITING.

4. THE GENERAL CONTRACTOR SHALL RECEIVE WRITTEN AUTHORIZATION TO PROCEED WITH CONSTRUCTION PRIOR TO STARTING WORK ON ANY ITEM NOT CLEARLY DEFINED BY THE CONSTRUCTION DRAWINGS/CONTRACT DOCUMENTS.

5. THE CONTRACTOR SHALL SUPERVISE AND DIRECT THE PROJECT DESCRIBED IN THE CONTRACT DOCUMENTS. THE CONTRACTOR SHALL BE SOLELY RESPONSIBLE FOR ALL CONSTRUCTION MEANS, METHODS, TECHNIQUES, SEQUENCES, SAFETY, AND PROCEDURES FOR COORDINATING ALL PORTIONS OF THE WORK UNDER THE CONTRACT.

6. THE CONTRACTOR SHALL INSTALL ALL EQUIPMENT AND MATERIALS ACCORDING TO MANUFACTURER'S/VENDOR'S SPECIFICATIONS UNLESS NOTED OTHERWISE OR WHERE LOCAL CODES OR ORDINANCES TAKE PRECEDENCE.

7. ALL WORK PERFORMED ON THE PROJECT AND MATERIALS INSTALLED SHALL BE IN STRICT ACCORDANCE WITH ALL APPLICABLE CODES, REGULATIONS, AND ORDINANCES. CONTRACTOR SHALL GIVE ALL NOTICES AND COMPLY WITH ALL LAWS, ORDINANCES, RULES, REGULATIONS AND LAWFUL ORDERS OF ANY PUBLIC AUTHORITY, MUNICIPAL AND UTILITY COMPANY SPECIFICATIONS, AND LOCAL AND STATE JURISDICTIONAL CODES BEARING ON THE PERFORMANCE OF THE WORK.

8. GENERAL CONTRACTOR SHALL PROVIDE, AT THE PROJECT SITE, A FULL SET OF CONSTRUCTION DOCUMENTS UPDATED WITH THE LATEST REVISIONS INVOLVED WITH THE PROJECT. THIS SET IS A VALID CONTRACT DOCUMENT ONLY IF THE TITLE SHEET IS STAMPED IN RED INK "FOR CONSTRUCTION" AND EACH SUCCESSIVE SHEET BEARS THE ARCHITECT'S/ENGINEER'S SIGNED WET STAMP.

9. THE CONTRACTOR IS RESPONSIBLE FOR ADEQUATELY BRACING AND PROTECTING ALL WORK DURING CONSTRUCTION AGAINST DAMAGE, BREAKAGE, COLLAPSE, ETC. ACCORDING TO APPLICABLE CODES, STANDARDS, AND GOOD CONSTRUCTION PRACTICES.

10. THE CONTRACTOR SHALL MEET ALL OSHA REQUIREMENTS FOR ALL INSTALLATIONS.

11. THE CONTRACTOR SHALL BE RESPONSIBLE FOR ALL DAMAGES TO THE EXISTING CONSTRUCTION AND REPAIR ALL DAMAGES TO BETTER THAN NEW CONSTRUCTION. THE CONTRACTOR SHALL NOTIFY THE CONSULTANT OF ANY DAMAGE TO THE BUILDING SITE OR ANY ADJACENT STRUCTURES AROUND THE PROJECT. THE T-MOBILE REPRESENTATIVE SHALL BE SOLE AND FINAL JUDGE AS TO THE QUALITY OF THE REPAIRED CONSTRUCTION. ANY ADDITIONAL MODIFICATIONS WHICH MUST BE MADE SHALL BE MADE AT THE CONTRACTOR'S EXPENSE.

12. WHERE NEW PAVING, CONCRETE SIDEWALKS OR PATHS MEET EXISTING CONSTRUCTION, THE CONTRACTOR SHALL MATCH THE EXISTING PITCH, GRADE, AND ELEVATION SO THE ENTIRE STRUCTURE SHALL HAVE A SMOOTH TRANSITION.

13. THE CONTRACTOR SHALL MODIFY THE EXISTING FLOORS, WALL, CEILING, OR OTHER CONSTRUCTION AS REQUIRED TO GAIN ACCESS TO AREAS FOR ALL MECHANICAL, PLUMBING, ELECTRICAL, OR STRUCTURAL MODIFICATIONS. WHERE THE EXISTING CONSTRUCTION DOORS, PARTITIONS, CEILING, ETC., ARE TO BE REMOVED, MODIFIED, OR REARRANGED OR WHERE THE EXPOSED OR HIDDEN MECHANICAL, ELECTRICAL, SYSTEMS ARE ADDED OR MODIFIED, THE GENERAL CONTRACTOR SHALL REPAIR, PATCH AND MATCH ALL EXISTING CONSTRUCTION AND FINISHES OF ALL FLOORS WALLS AND CEILINGS. WHERE CONCRETE MASONRY CONSTRUCTION IS MODIFIED, THE CONTRACTOR SHALL TOOTH IN ALL NEW CONSTRUCTION TO MATCH THE EXISTING BOND. WHERE CONCRETE CONSTRUCTION IS MODIFIED, THE CONTRACTOR SHALL VERIFY THE EXACT DETAILS TO BE USED FOR CONSTRUCTION. ALL WORK SHALL BE COVERED UNDER THE GENERAL CONTRACT.

14. IF CONTRACTOR OR SUBCONTRACTOR FIND IT NECESSARY TO DEVIATE FROM ORIGINAL APPROVED PLANS, THEN IT IS THE CONTRACTOR'S AND THE SUBCONTRACTOR'S RESPONSIBILITY TO PROVIDE THE CONSULTANT WITH 4 COPIES OF THE PROPOSED CHANGES FOR HIS APPROVAL BEFORE PROCEEDING WITH THE WORK. IN ADDITION THE CONTRACTOR AND SUBCONTRACTORS SHALL BE RESPONSIBLE FOR PROCURING ALL NECESSARY APPROVALS FROM THE BUILDING AUTHORITIES FOR THE PROPOSED CHANGES BEFORE PROCEEDING WITH THE WORK. THE CONTRACTOR AND SUBCONTRACTORS SHALL BE RESPONSIBLE FOR PROCURING ALL NECESSARY INSPECTIONS AND APPROVALS FROM BUILDING AUTHORITIES DURING THE EXECUTION OF THE WORK.

15. CONTRACTOR TO PROVIDE A PORTABLE FIRE EXTINGUISHER WITH A RATING OF NOT LESS THAN 2-A OR 2-A10BC WITHIN 75 FEET TRAVEL DISTANCE TO ALL PORTIONS OF PROJECT AREA DURING CONSTRUCTION.

16. THE CONTRACTOR SHALL PERFORM WORK DURING OWNER'S PREFERRED HOURS TO AVOID DISTURBING NORMAL BUSINESS.

17. SEAL ALL PENETRATIONS THROUGH FIRE-RATED AREAS WITH U.L. LISTED OR FIRE MARSHAL APPROVED MATERIALS AS APPLICABLE TO THIS FACILITY AND OR PROJECT SITE.

18. CONTRACTOR SHALL BE RESPONSIBLE FOR UTILITY LOCATES, SCHEDULING, COORDINATING SPECIAL AND BUILDING DEPARTMENT INSPECTIONS.

19. CONTRACTOR SHALL BE RESPONSIBLE FOR CONTACTING AND UTILIZING ORIGINAL ROOFING CONTRACTOR AS REQUIRED TO MAINTAIN ANY EXISTING ROOFING WARRANTY.

20. ROUTING OF ALL CONDUITS, CABLES, CABLE TRAYS ETC ARE INDICATED AS PROPOSED LOCATION ONLY. CONFIRM THE EXACT LOCATION AND ROUTING WITH THE ON SITE T-MOBILE CONSTRUCTION MANAGER PRIOR TO STARTING WORK.

ABBREVIATIONS

AC	AIR CONDITIONER
AFF	ABOVE FINISHED FLOOR
AFG	ABOVE FINISHED GRADE
AFS	ABOVE FINISHED SLAB
ALUM	ALUMINUM
	ANCHOR BOLT
	ANGLE
ARCH	ARCHITECTURAL
BTS	BASE TRANSMISSION SYSTEM
BLDG	BUILDING
BM	BEAM
BOT	BOTTOM
B.O.	BOTTOM OF
BOC	BOTTOM OF CONCRETE
BOS	BOTTOM OF STEEL
	CONTROL JOINT
	CENTER LINE
CLG	CEILING
CLR	CLEAR
CMU	CONCRETE MASONRY UNIT
COL	COLUMN
CONC	CONCRETE
CONST	CONSTRUCTION
CONT	CONTINUOUS
CTR	CENTER
DIA / Ø	DIAMETER
DTL	DETAIL
	EXISTING
EA	EACH
	EXPANSION JOINT
ELEC	ELECTRIC/ELECTRICAL
	ELEVATION
EQ	EQUAL
EW	EACH WAY
EXP	EXPANSION
EXT	EXTERIOR
	FLOOR DRAIN
FIN	FINISH
FIN FLR	FINISH FLOOR
FLR	FLOOR
FTG	FOOTING
GA	GAUGE
GALV	GALVANIZED
GYP	GYPSUM
GB	GYPSUM BOARD
HM	HOLLOW METAL
HOR	HORIZONTAL
HR	HOUR
	HEIGHT
HVAC	HEATING VENTILATION AIR CONDITIONING
INSUL	INSULATION
INT	INTERIOR
JT	JOINT
LAM	LAMINATED
LF	LINEAL FOOT
MANUF	MANUFACTURER
MAX	MAXIMUM
MECH	MECHANICAL
MH	MANHOLE
MM	MILLIMETER
MIN	MINIMUM
MISC	MISCELLANEOUS
MPH	MILES PER HOUR
MTL	METAL
NIC	NOT IN CONTRACT
NOM	NOMINAL
NTS	NOT TO SCALE
OC	ON CENTER
OD	OUTSIDE DIAMETER
OH	OVERHEAD
OPNG	OPENING
OPP	OPPOSITE
(P)	PROPOSED
PCS	PERSONAL COMMUNICATION SYSTEM
P	PLATE
PR	PAIR
PSI	POUNDS PER SQUARE INCH
PSF	POUNDS PER SQUARE FOOT
PT	PRESSURE TREATED
RAD	RADIUS
RD	ROOF DRAIN
REINF	REINFORCED/REINFORCING
REQ'D	REQUIRED
RM	ROOM
R/W	RIGHT OF WAY
SCHED	SCHEDULE
SECT	SECTION
SF	SQUARE FOOT
SIM	SIMILAR
SQ FT	SQUARE FOOT
SS	STAINLESS STEEL
STD	STANDARD
STL	STEEL
STRUC	STRUCTURAL
TEMP	TEMPORARY
THK	THICK
T.O.	TOP OF
TOS	TOP OF STEEL
TOC	TOP OF CONCRETE
TYP	TYPICAL
UNO	UNLESS NOTED OTHERWISE
VCT	VINYL COMPOSITION TILE
VERT	VERTICAL
W/	WITH
WWM	WELDED WIRE MESH

LEGENDS & SYMBOLS

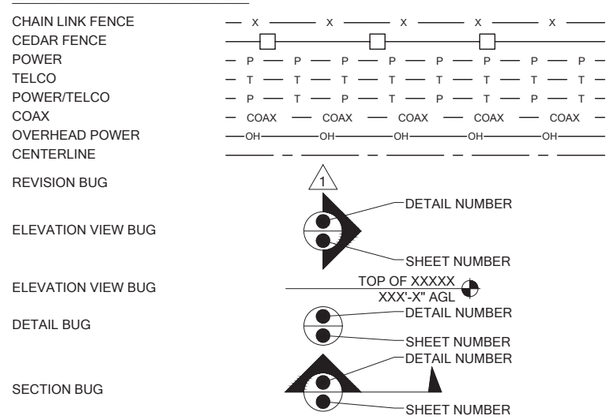

SPECIAL INSPECTIONS:

SPECIAL INSPECTIONS IN ACCORDANCE WITH IBC 2018 SECTION 1704.

SOILS/GEOTECHNICAL:
- ☐ SHORING INSTALLATION AND MONITORING
- ☐ OBSERVE AND MONITOR EXCAVATION
- ☐ VERIFY SOIL BEARING _____ psf BEARING
- ☐ SUBSURFACE DRAINAGE PLACEMENT
- ☐ VERIFY FILL MATERIAL AND COMPACTION
- ☐ VERIFY CONDITIONS AS ANTICIPATED
- ☐ PILE PLACEMENT (AUGER CAST/DRIVEN PILE)
- ☐ OTHER

REINFORCED CONCRETE:
- ☐ REINFORCING STEEL AND CONCRETE PLACEMENT
- ☐ PRESTRESSED/PRECAST CONCRETE FABRICATION AND ERECTION
- ☐ BATCH PLANT INSPECTION
- ☐ SHOTCRETE
- ☐ GROUTING
- ☐ OTHER

STRUCTURAL STEEL:
- ☐ FABRICATION AND SHOP WELDS
- ☐ ERECTION AND FIELD WELDS AND BOLTING
- ☐ OTHER: _____

STRUCTURAL ALUMINUM:
- ☐ FABRICATION AND SHOP WELDS
- ☐ ERECTION AND FIELD WELDS AND BOLTING
- ☐ OTHER: _____

STRUCTURAL MASONRY:
- ☐ CONTINUOUS
- ☐ PERIODIC
- ☐ OTHER: _____

MISCELLANEOUS:
- ☐ OTHER: _____

ANCHORING TO CONCRETE:
- ☐ BOLTS INSTALLED IN CONCRETE
- ☐ POST-INSTALLATION ADHESIVE ANCHORS
- ☐ POST-INSTALLATION MECHANICAL ANCHORS

SAFETY PRECAUTION SHALL BE IMPLEMENTED BY CONTRACTOR(S) AT ALL TRENCHING IN ACCORDANCE WITH CURRENT OSHA STANDARDS

CALL TWO WORKING DAYS BEFORE YOU DIG

811

NATIONAL UTILITIES UNDERGROUND LOCATE

ELECTRIC - RED	TEL/CATV - ORANGE
SEWER - GREEN	PROPOSED - WHITE
GAS/OIL - YELLOW	WATER - BLUE
SURVEY - PINK	

T-Mobile

PROJECT INFORMATION:

WELLER KING/FUJISADA CONDOS
SE03494E

510 6TH AVE S
SEATTLE, WA 98104

ISSUED FOR:

BUILDING PERMIT

REVISION HISTORY:

NO.	DATE:	DESCRIPTION:	CHK. BY:
19	5/31/2022	UPDATED STRUCTURAL SHEETS ADDED	BJT
18	5/29/2022	UPDATED STRUCTURAL SHEETS ADDED	BJT
17	5/25/2022	MINOR REV	BJT
16	5/24/2022	MINOR REV	BJT
15	5/18/2022	MINOR REV	BJT
14	5/17/2022	REVISED PER OWNER COMMENTS	BJT
13	5/9/2022	REVISED STRUCTURAL SHEETS ADDED	BJT
12	4/28/2022	MINOR REV	BJT
11	4/27/2022	MINOR REV	BJT
10	4/20/2022	REVISED PER REDLINES	BJT
9	4/8/2022	RELOCATED ANTENNAS, REVISED PER SITE WALK	BJT

PLANS PREPARED BY:

B. J. THOMAS, P.E.
7607 80TH AVE NE
MARYSVILLE, WA 98270
206-851-1106

DRAWN BY:	CHK. BY:
JL	BJ

LICENSURE:

B. J. THOMAS — STATE OF WASHINGTON — REGISTERED PROFESSIONAL ENGINEER

5/31/2022

JURISDICTIONAL APPROVAL:

DRAWING TITLE:

GENERAL NOTES

DRAWING NUMBER:

G-1

LEGAL DESCRIPTION

ABBREVIATED PER ASSESSOR RECORDS.

ALL UNITS OF FUJISADA, A CONDOMINIUM, ACCORDING TO THE DECLARATION THEREOF RECORDED UNDER RECORDING NUMBER 19990927002088, AND ANY AMENDMENTS THERETO, AND SURVEY MAP AND PLANS RECORDED IN VOLUME 159 OF CONDOMINIUMS, PAGES 19 THROUGH 25, INCLUSIVE, RECORDS OF KING COUNTY, WASHINGTON.

PROPERTY OWNER:	FUJISADA, A CONDOMINIUM
ADDRESS:	510 6TH AVE S SEATTLE, WA 98104
BUILDING GROSS SQFT:	5,312 s.f.
LAND SQFT:	7,200 s.f.

QUARTER SECTION TOWNSHIP RANGE: NW-5-24-4

ROOFTOP COVERAGE SCHEDULE:

ROOFTOP:	5,730± sqft
EXISTING ROOFTOP EQUIPMENT:	150± sqft
PROPOSED T-MOBILE EQUIPMENT:	234 sqft
TOTAL COVERAGE:	6.70%

ZONE HEIGHT TABLE:

ZONE BUILDING HEIGHT LIMIT: 85'
ALLOWABLE MAXIMUM HEIGHT ALLOWED FOR LESS THAN 20% OF THE TOTAL ROOFTOP AREA: 100'
EXISTING BUILDING ROOFTOP AREA: 5,730± sqft
EXISTING COVERAGE AREA OF ROOFTOP FEATURES EXTENDING ABOVE 85' BUT LESS THAN 100': 170 sqft OR 2.97%
PROPOSED COVERAGE AREA OF ROOFTOP FEATURES EXTENDING ABOVE 85' BUT LESS THAN 100': 170 sqft OR 2.97%
ALL FEATURES WILL BE LESS THAN 100', AND TOTAL AREA OF FEATURES EXTENDING BEYOND 85' IS LESS THAN 20%.

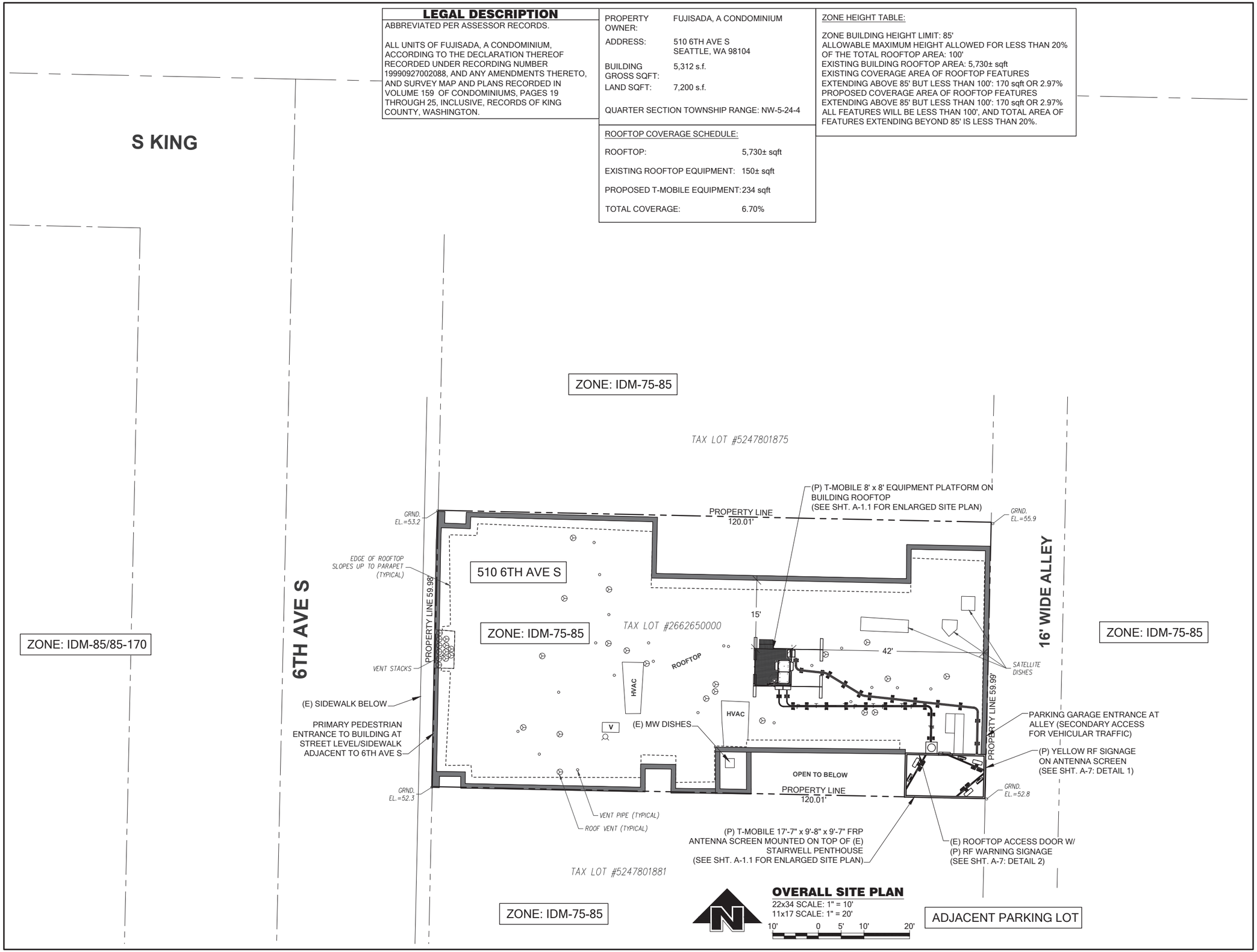

OVERALL SITE PLAN
22x34 SCALE: 1" = 10'
11x17 SCALE: 1" = 20'

T-Mobile

PROJECT INFORMATION:

WELLER KING/FUJISADA CONDOS
SE03494E

510 6TH AVE S
SEATTLE, WA 98104

ISSUED FOR:

BUILDING PERMIT

REVISION HISTORY:

NO.	DATE:	DESCRIPTION:	CHK. BY:
19	5/31/2022	UPDATED STRUCTURAL SHEETS ADDED	BJT
18	5/29/2022	UPDATED STRUCTURAL SHEETS ADDED	BJT
17	5/25/2022	MINOR REV	BJT
16	5/24/2022	MINOR REV	BJT
15	5/18/2022	MINOR REV	BJT
14	5/17/2022	REVISED PER OWNER COMMENTS	BJT
13	5/9/2022	REVISED STRUCTURAL SHEETS ADDED	BJT
12	4/28/2022	MINOR REV	BJT
11	4/27/2022	MINOR REV	BJT
10	4/20/2022	REVISED PER REDLINES	BJT
9	4/8/2022	RELOCATED ANTENNAS, REVISED PER SITE WALK	BJT

PLANS PREPARED BY:

B. J. THOMAS, P.E.
7607 80TH AVE NE
MARYSVILLE, WA 98270
206-851-1106

DRAWN BY:	CHK. BY:
JL	BJ

LICENSURE:

B. J. THOMAS
STATE OF WASHINGTON
REGISTERED PROFESSIONAL ENGINEER
BJ Thomas
5/31/2022

JURISDICTIONAL APPROVAL:

DRAWING TITLE:

OVERALL SITE PLAN

DRAWING NUMBER:

A-1

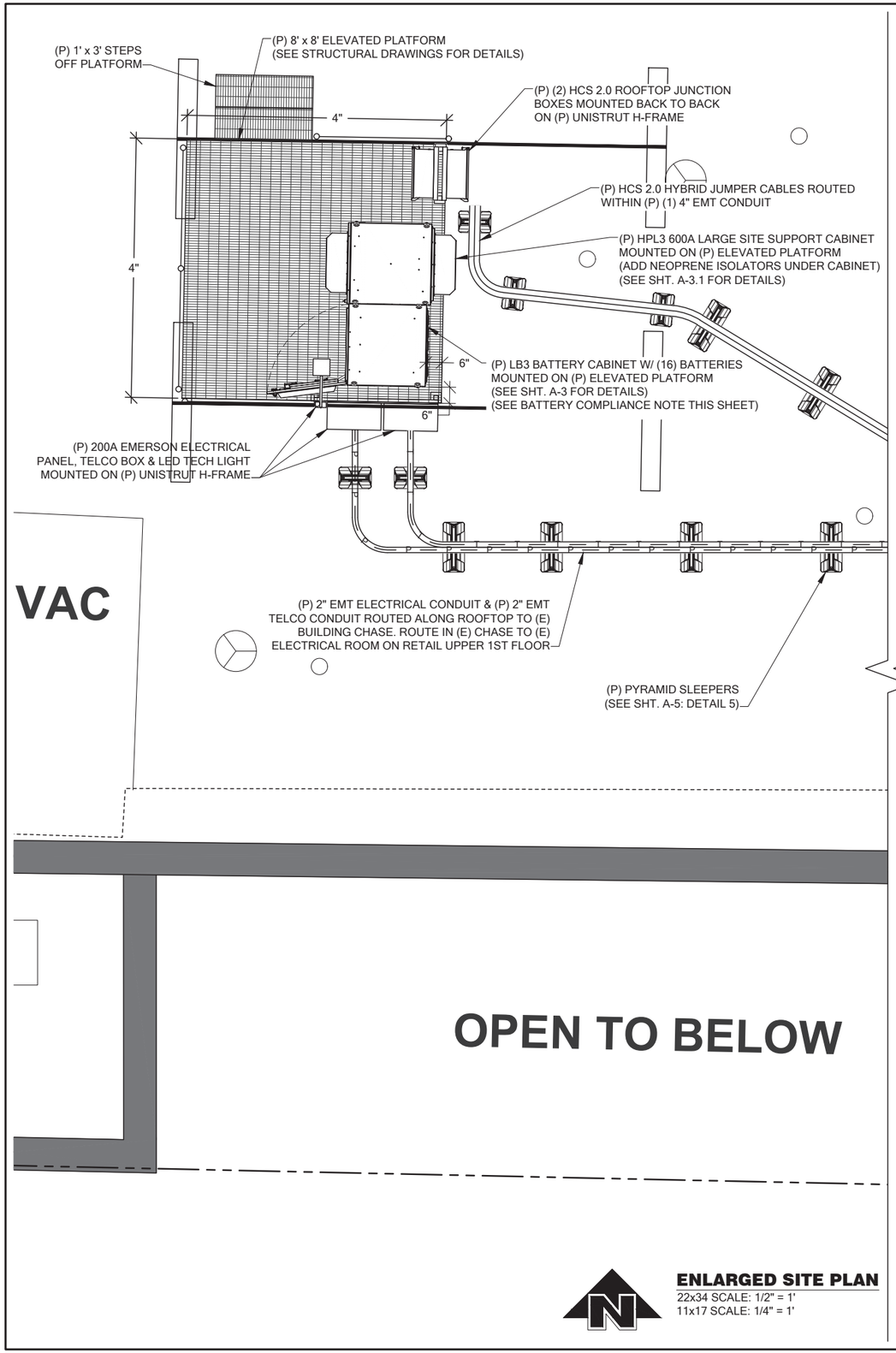

ENLARGED SITE PLAN
22x34 SCALE: 1/2" = 1'
11x17 SCALE: 1/4" = 1'

BATTERY COMPLIANCE NOTE:

PROPOSED FINAL BATTERY CONFIGURATION TO CONSIST OF (16) LEAD ACID BATTERIES. 2018 IFC/SFC COMPLIANCE: EACH BATTERY IS RATED AT 2.28 kWh (12Vx190AH/1000) FOR A TOTAL OF 36.48kWh. AS THIS DOES NOT EXCEED THE 70kWh THRESHOLD LISTED IN TABLE 1206.2 OF THE 2018 INTERNATIONAL FIRE CODE/SEATTLE FIRE CODE, COMPLIANCE WITH 2018 IFC/SFC SECTIONS 1206.2.1 THROUGH 1206.2.12.6 IS NOT REQUIRED.

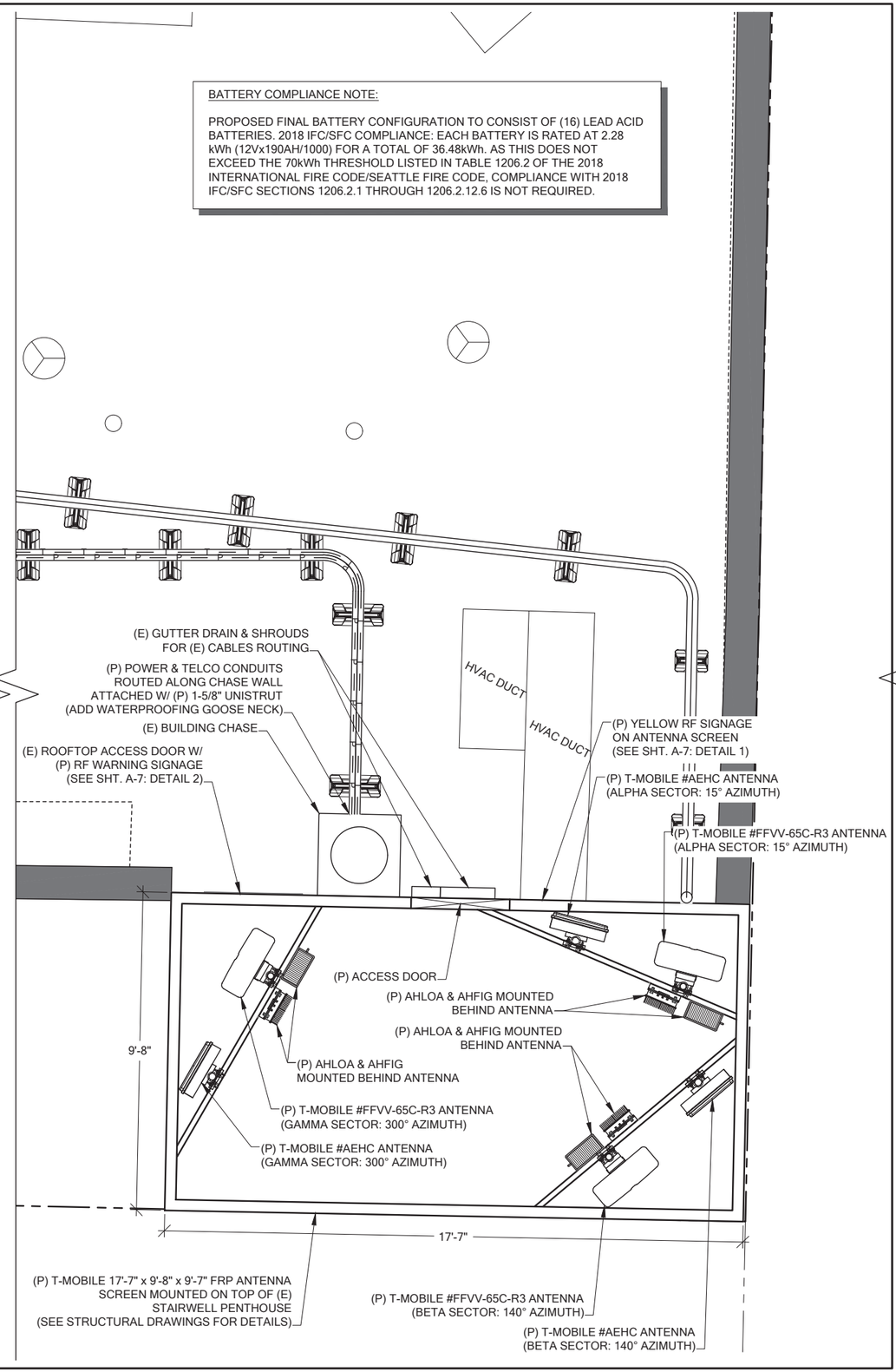

T-Mobile

PROJECT INFORMATION:

WELLER KING/FUJISADA CONDOS
SE03494E

510 6TH AVE S
SEATTLE, WA 98104

ISSUED FOR:

BUILDING PERMIT

REVISION HISTORY:

NO.	DATE:	DESCRIPTION:	CHK. BY:
19	5/31/2022	UPDATED STRUCTURAL SHEETS ADDED	BJT
18	5/29/2022	UPDATED STRUCTURAL SHEETS ADDED	BJT
17	5/25/2022	MINOR REV	BJT
16	5/24/2022	MINOR REV	BJT
15	5/18/2022	MINOR REV	BJT
14	5/17/2022	REVISED PER OWNER COMMENTS	BJT
13	5/9/2022	REVISED STRUCTURAL SHEETS ADDED	BJT
12	4/28/2022	MINOR REV	BJT
11	4/27/2022	MINOR REV	BJT
10	4/20/2022	REVISED PER REDLINES	BJT
9	4/8/2022	RELOCATED ANTENNAS, REVISED PER SITE WALK	BJT

PLANS PREPARED BY:

B. J. THOMAS, P.E.
7607 80TH AVE NE
MARYSVILLE, WA 98270
206-851-1106

DRAWN BY:	CHK. BY:
JL	BJ

LICENSURE:

B J Thomas
5/31/2022
B. J. THOMAS
STATE OF WASHINGTON
REGISTERED PROFESSIONAL ENGINEER

JURISDICTIONAL APPROVAL:

DRAWING TITLE:

ENLARGED SITE PLAN

DRAWING NUMBER:

A-1.1

1 A-2 **EXISTING WEST ELEVATION**
SCALE: NTS

SCREEN WALL ENCLOSURE DESIGN NOTE:

PROPOSED SCREEN WALL WILL BE CONSTRUCTED WITH AN EXTERIOR FINISH OF RF TRANSPARENT FRP DESIGNED TO MATCH THE COLOR AND TEXTURE OF THE EXISTING HORIZONTAL LAP SIDING AND TRIM OF THE EXISTING PENTHOUSE. (E) PENTHOUSE PARAPET TO BE REMOVED FOR FRP SCREEN INSTALLATION. SEE STRUCTURAL SHEETS FOR DETAILS.

COLOR SPECIFICATIONS:
SHERWIN WILLIAMS SW 7529 SAND BEACH (BASED ON VISUAL INSPECTION AND MATCH, GC TO CONFIRM PHYSICAL MATCH ON SITE AND VERIFY)

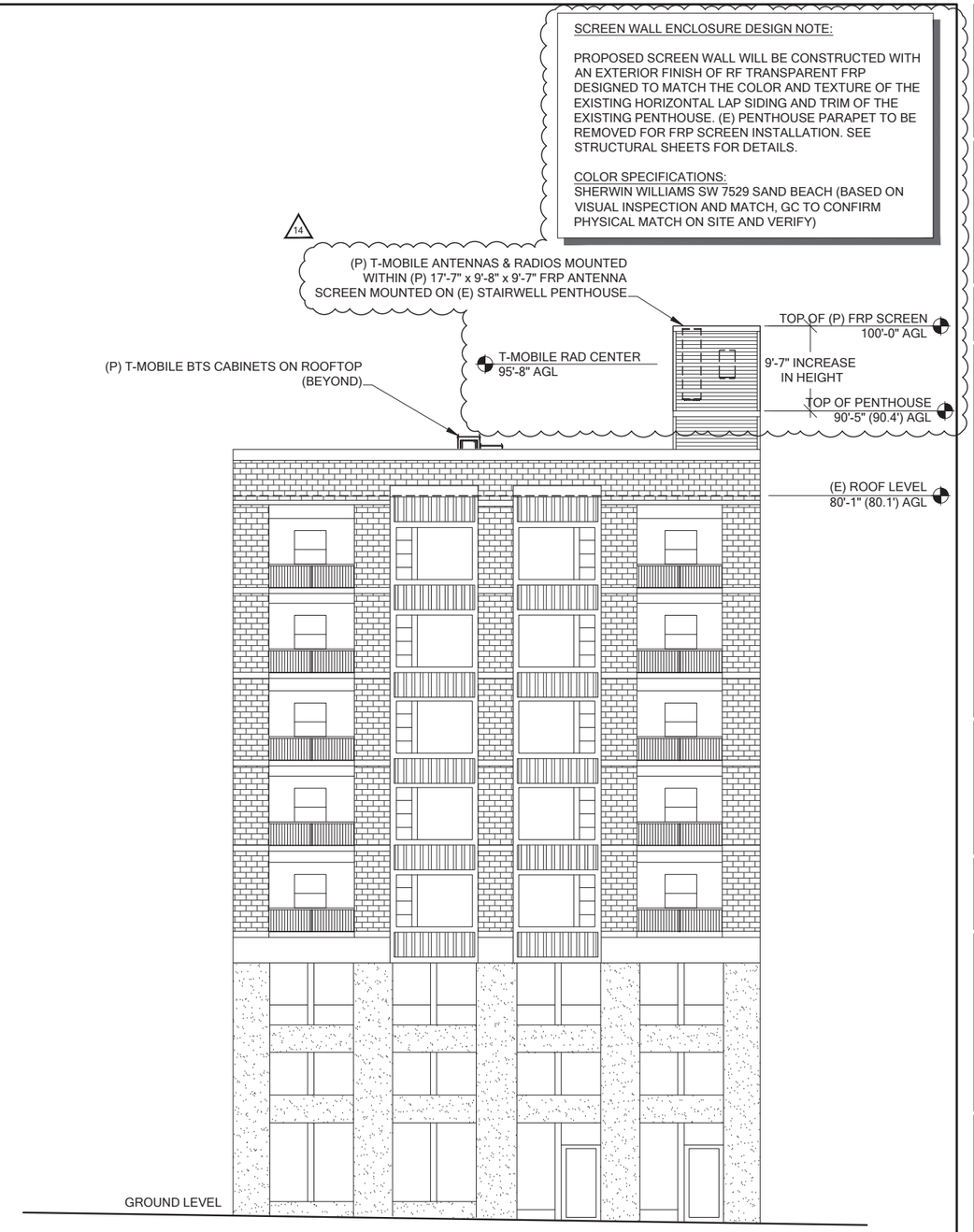

2 A-2 **PROPOSED WEST ELEVATION**
SCALE: NTS

T-Mobile

PROJECT INFORMATION:

WELLER KING/FUJISADA CONDOS
SE03494E

510 6TH AVE S
SEATTLE, WA 98104

ISSUED FOR:

BUILDING PERMIT

REVISION HISTORY:

NO.	DATE:	DESCRIPTION:	CHK. BY:
19	5/31/2022	UPDATED STRUCTURAL SHEETS ADDED	BJT
18	5/29/2022	UPDATED STRUCTURAL SHEETS ADDED	BJT
17	5/25/2022	MINOR REV	BJT
16	5/24/2022	MINOR REV	BJT
15	5/18/2022	MINOR REV	BJT
14	5/17/2022	REVISED PER OWNER COMMENTS	BJT
13	5/9/2022	REVISED STRUCTURAL SHEETS ADDED	BJT
12	4/28/2022	MINOR REV	BJT
11	4/27/2022	MINOR REV	BJT
10	4/20/2022	REVISED PER REDLINES	BJT
9	4/8/2022	RELOCATED ANTENNAS, REVISED PER SITE WALK	BJT

PLANS PREPARED BY:

B. J. THOMAS, P.E.
7607 80TH AVE NE
MARYSVILLE, WA 98270
206-851-1106

DRAWN BY:	CHK. BY:
JL	BJ

LICENSURE:

B J Thomas
5/31/2022
B. J. THOMAS
STATE OF WASHINGTON
REGISTERED PROFESSIONAL ENGINEER

JURISDICTIONAL APPROVAL:

DRAWING TITLE:

SITE ELEVATION

DRAWING NUMBER:

A-2

1 / A-2.1 **EXISTING SOUTH ELEVATION**
SCALE: NTS

T-Mobile

PROJECT INFORMATION:

WELLER KING/FUJISADA CONDOS
SE03494E

510 6TH AVE S
SEATTLE, WA 98104

ISSUED FOR:

BUILDING PERMIT

REVISION HISTORY:

NO.	DATE:	DESCRIPTION:	CHK. BY:
19	5/31/2022	UPDATED STRUCTURAL SHEETS ADDED	BJT
18	5/29/2022	UPDATED STRUCTURAL SHEETS ADDED	BJT
17	5/25/2022	MINOR REV	BJT
16	5/24/2022	MINOR REV	BJT
15	5/18/2022	MINOR REV	BJT
14	5/17/2022	REVISED PER OWNER COMMENTS	BJT
13	5/9/2022	REVISED STRUCTURAL SHEETS ADDED	BJT
12	4/28/2022	MINOR REV	BJT
11	4/27/2022	MINOR REV	BJT
10	4/20/2022	REVISED PER REDLINES	BJT
9	4/8/2022	RELOCATED ANTENNAS, REVISED PER SITE WALK	BJT

PLANS PREPARED BY:

B. J. THOMAS, P.E.
7607 80TH AVE NE
MARYSVILLE, WA 98270
206-851-1106

DRAWN BY:	CHK. BY:
JL	BJ

LICENSURE:

B. J. THOMAS
STATE OF WASHINGTON
REGISTERED PROFESSIONAL ENGINEER
5/31/2022

JURISDICTIONAL APPROVAL:

DRAWING TITLE:

SITE ELEVATION

DRAWING NUMBER:

A-2.1

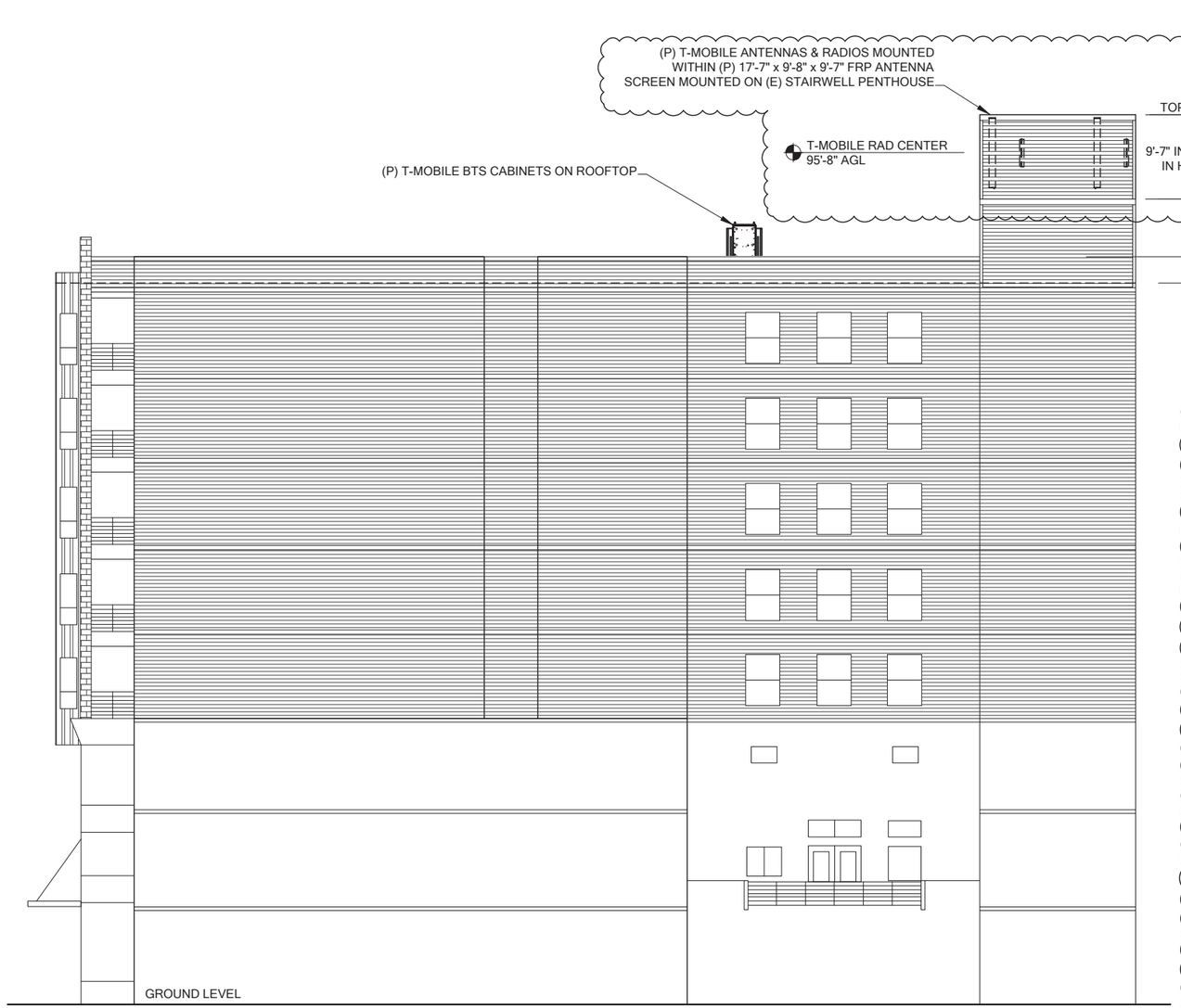

1 A-2.2 **PROPOSED SOUTH ELEVATION**
SCALE: NTS

SCREEN WALL ENCLOSURE DESIGN NOTE:

PROPOSED SCREEN WALL WILL BE CONSTRUCTED WITH AN EXTERIOR FINISH OF RF TRANSPARENT FRP DESIGNED TO MATCH THE COLOR AND TEXTURE OF THE EXISTING HORIZONTAL LAP SIDING AND TRIM OF THE EXISTING PENTHOUSE. (E) PENTHOUSE PARAPET TO BE REMOVED FOR FRP SCREEN INSTALLATION. SEE STRUCTURAL SHEETS FOR DETAILS.

COLOR SPECIFICATIONS:
SHERWIN WILLIAMS SW 7529 SAND BEACH (BASED ON VISUAL INSPECTION AND MATCH, GC TO CONFIRM PHYSICAL MATCH ON SITE AND VERIFY)

14

14

NOTE:
CONTRACTOR TO REPLACE WOOD SIDING AND TRIM BELOW TRANSITION AND PAINT TO MATCH AS REQUIRED TO CREATE A GAP FREE AND SEAMLESS ARCHITECTURAL TRANSITION BETWEEN THE EXISTING AND PROPOSED STRUCTURE.

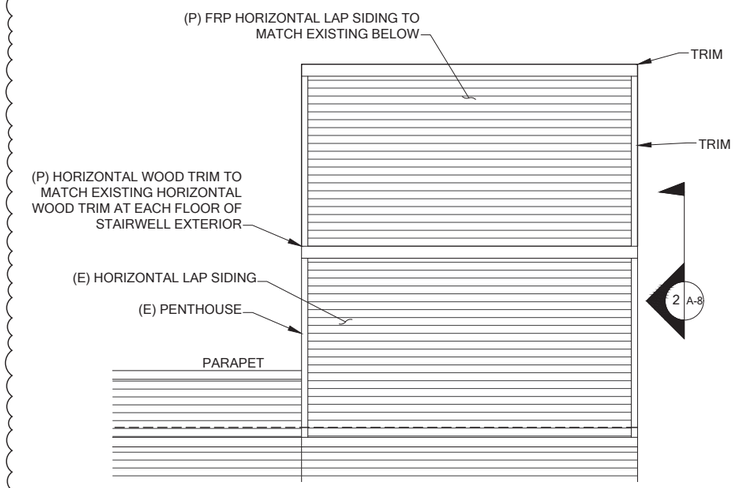

2 A-2.2 **ENLARGED SCREEN ELEVATION**
SCALE: NTS

T-Mobile

PROJECT INFORMATION:

WELLER KING/FUJISADA CONDOS
SE03494E

510 6TH AVE S
SEATTLE, WA 98104

ISSUED FOR:

BUILDING PERMIT

REVISION HISTORY:

NO.	DATE:	DESCRIPTION:	CHK. BY:
19	5/31/2022	UPDATED STRUCTURAL SHEETS ADDED	BJT
18	5/29/2022	UPDATED STRUCTURAL SHEETS ADDED	BJT
17	5/25/2022	MINOR REV	BJT
16	5/24/2022	MINOR REV	BJT
15	5/18/2022	MINOR REV	BJT
14	5/17/2022	REVISED PER OWNER COMMENTS	BJT
13	5/9/2022	REVISED STRUCTURAL SHEETS ADDED	BJT
12	4/28/2022	MINOR REV	BJT
11	4/27/2022	MINOR REV	BJT
10	4/20/2022	REVISED PER REDLINES	BJT
9	4/8/2022	RELOCATED ANTENNAS, REVISED PER SITE WALK	BJT

PLANS PREPARED BY:

B. J. THOMAS, P.E.
7607 80TH AVE NE
MARYSVILLE, WA 98270
206-851-1106

DRAWN BY:	CHK. BY:
JL	BJ

LICENSURE:

B J Thomas
5/31/2022
B. J. THOMAS
STATE OF WASHINGTON
REGISTERED PROFESSIONAL ENGINEER

JURISDICTIONAL APPROVAL:

DRAWING TITLE:

SITE ELEVATION

DRAWING NUMBER:

A-2.2

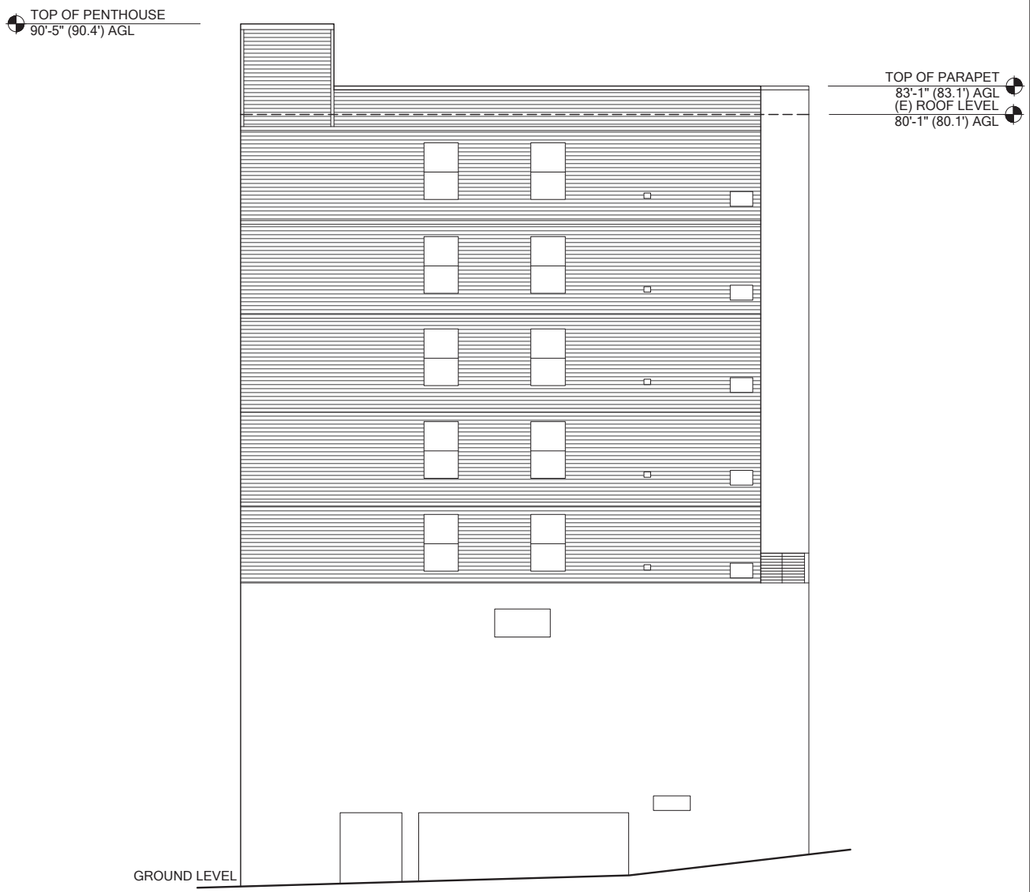

1 A-2.3 **EXISTING EAST ELEVATION**
SCALE: NTS

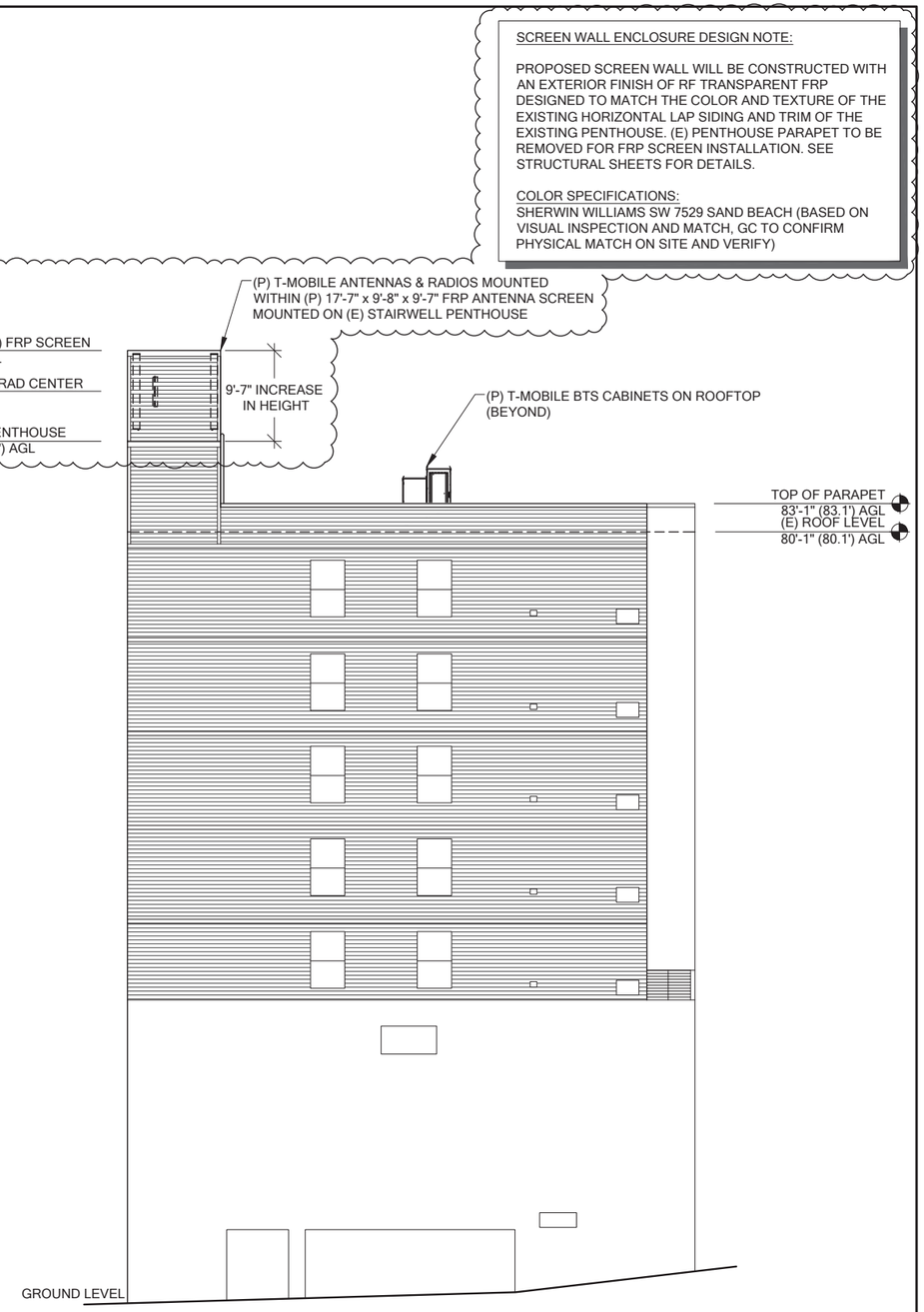

2 A-2.3 **PROPOSED EAST ELEVATION**
SCALE: NTS

T-Mobile

PROJECT INFORMATION:

WELLER KING/FUJISADA CONDOS
SE03494E

510 6TH AVE S
SEATTLE, WA 98104

ISSUED FOR:

BUILDING PERMIT

REVISION HISTORY:

NO.	DATE:	DESCRIPTION:	CHK. BY:
19	5/31/2022	UPDATED STRUCTURAL SHEETS ADDED	BJT
18	5/29/2022	UPDATED STRUCTURAL SHEETS ADDED	BJT
17	5/25/2022	MINOR REV	BJT
16	5/24/2022	MINOR REV	BJT
15	5/18/2022	MINOR REV	BJT
14	5/17/2022	REVISED PER OWNER COMMENTS	BJT
13	5/9/2022	REVISED STRUCTURAL SHEETS ADDED	BJT
12	4/28/2022	MINOR REV	BJT
11	4/27/2022	MINOR REV	BJT
10	4/20/2022	REVISED PER REDLINES	BJT
9	4/8/2022	RELOCATED ANTENNAS, REVISED PER SITE WALK	BJT

PLANS PREPARED BY:

B. J. THOMAS, P.E.
7607 80TH AVE NE
MARYSVILLE, WA 98270
206-851-1106

DRAWN BY:	CHK. BY:
JL	BJ

LICENSURE:

B J Thomas
5/31/2022
B. J. THOMAS
STATE OF WASHINGTON
REGISTERED PROFESSIONAL ENGINEER

JURISDICTIONAL APPROVAL:

DRAWING TITLE:

SITE ELEVATION

DRAWING NUMBER:

A-2.3

1 / A-2.4 **EXISTING NORTH ELEVATION**
SCALE: NTS

T-Mobile

PROJECT INFORMATION:

WELLER KING/FUJISADA CONDOS
SE03494E

510 6TH AVE S
SEATTLE, WA 98104

ISSUED FOR:

BUILDING PERMIT

REVISION HISTORY:

NO.	DATE:	DESCRIPTION:	CHK. BY:
19	5/31/2022	UPDATED STRUCTURAL SHEETS ADDED	BJT
18	5/29/2022	UPDATED STRUCTURAL SHEETS ADDED	BJT
17	5/25/2022	MINOR REV	BJT
16	5/24/2022	MINOR REV	BJT
15	5/18/2022	MINOR REV	BJT
14	5/17/2022	REVISED PER OWNER COMMENTS	BJT
13	5/9/2022	REVISED STRUCTURAL SHEETS ADDED	BJT
12	4/28/2022	MINOR REV	BJT
11	4/27/2022	MINOR REV	BJT
10	4/20/2022	REVISED PER REDLINES	BJT
9	4/8/2022	RELOCATED ANTENNAS, REVISED PER SITE WALK	BJT

PLANS PREPARED BY:

B. J. THOMAS, P.E.
7607 80TH AVE NE
MARYSVILLE, WA 98270
206-851-1106

DRAWN BY:	CHK. BY:
JL	BJ

LICENSURE:

B. J. THOMAS
STATE OF WASHINGTON
REGISTERED PROFESSIONAL ENGINEER
5/31/2022

JURISDICTIONAL APPROVAL:

DRAWING TITLE:

SITE ELEVATION

DRAWING NUMBER:

A-2.4

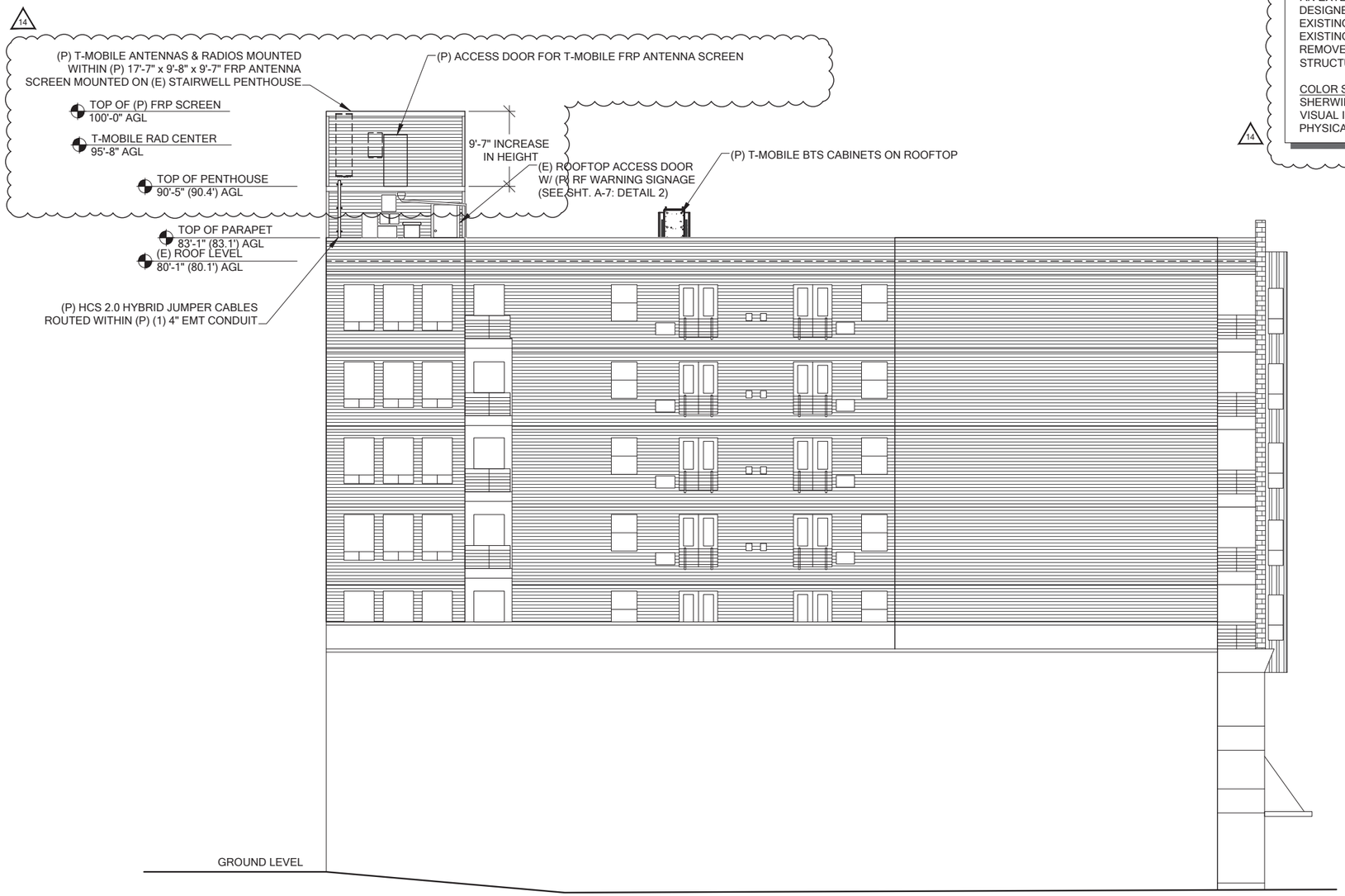

1 A-2.5 **PROPOSED NORTH ELEVATION**
SCALE: NTS

14

SCREEN WALL ENCLOSURE DESIGN NOTE:

PROPOSED SCREEN WALL WILL BE CONSTRUCTED WITH AN EXTERIOR FINISH OF RF TRANSPARENT FRP DESIGNED TO MATCH THE COLOR AND TEXTURE OF THE EXISTING HORIZONTAL LAP SIDING AND TRIM OF THE EXISTING PENTHOUSE. (E) PENTHOUSE PARAPET TO BE REMOVED FOR FRP SCREEN INSTALLATION. SEE STRUCTURAL SHEETS FOR DETAILS.

COLOR SPECIFICATIONS:
SHERWIN WILLIAMS SW 7529 SAND BEACH (BASED ON VISUAL INSPECTION AND MATCH, GC TO CONFIRM PHYSICAL MATCH ON SITE AND VERIFY)

T-Mobile

PROJECT INFORMATION:

WELLER KING/FUJISADA CONDOS
SE03494E

510 6TH AVE S
SEATTLE, WA 98104

ISSUED FOR:

BUILDING PERMIT

REVISION HISTORY:

NO.	DATE:	DESCRIPTION:	CHK. BY:
19	5/31/2022	UPDATED STRUCTURAL SHEETS ADDED	BJT
18	5/29/2022	UPDATED STRUCTURAL SHEETS ADDED	BJT
17	5/25/2022	MINOR REV	BJT
16	5/24/2022	MINOR REV	BJT
15	5/18/2022	MINOR REV	BJT
14	5/17/2022	REVISED PER OWNER COMMENTS	BJT
13	5/9/2022	REVISED STRUCTURAL SHEETS ADDED	BJT
12	4/28/2022	MINOR REV	BJT
11	4/27/2022	MINOR REV	BJT
10	4/20/2022	REVISED PER REDLINES	BJT
9	4/8/2022	RELOCATED ANTENNAS, REVISED PER SITE WALK	BJT

PLANS PREPARED BY:

B. J. THOMAS, P.E.
7607 80TH AVE NE
MARYSVILLE, WA 98270
206-851-1106

DRAWN BY: JL
CHK. BY: BJ

LICENSURE:

B J Thomas
5/31/2022
B. J. THOMAS
STATE OF WASHINGTON
REGISTERED PROFESSIONAL ENGINEER

JURISDICTIONAL APPROVAL:

DRAWING TITLE:

SITE ELEVATION

DRAWING NUMBER:

A-2.5

"FINAL" SITE LOADING CHART

SECTOR	COLOR	POSITION	ANTENNA MODEL #	VENDOR	AZIMUTH (TN)	RADIATION CENTER 14	HYBRID CABLE LENGTH	COAX CABLES	ADDITIONAL EQUIPMENT
ALPHA	RED	1 2	FFVV-65C-R3-V1 AEHC	COMMSCOPE NOKIA	15°	95'-8" AGL 95'-8" AGL	HCS 2.0 HYBRID JUMPER CABLES	N/A	(1) AHLOA (1) AHFIG
BETA	GREEN	1 2	FFVV-65C-R3-V1 AEHC	COMMSCOPE NOKIA	140°	95'-8" AGL 95'-8" AGL			(1) AHLOA (1) AHFIG
GAMMA	BLUE	1 2	FFVV-65C-R3-V1 AEHC	COMMSCOPE NOKIA	300°	95'-8" AGL 95'-8" AGL			(1) AHLOA (1) AHFIG

RFDS	
PROJECT TYPE	CELL SPLIT
RFDS VERSION	1

MANUFACTURER: NOKIA
MODEL: AEHC
WEIGHT: 108 LBS
DIMENSIONS: 38.2" x 21.5" x 5.9"

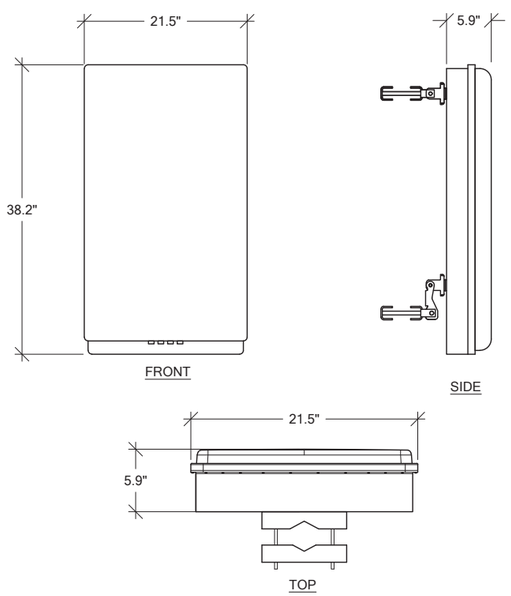

1 RF-1 **AEHC DETAIL**
SCALE: NTS

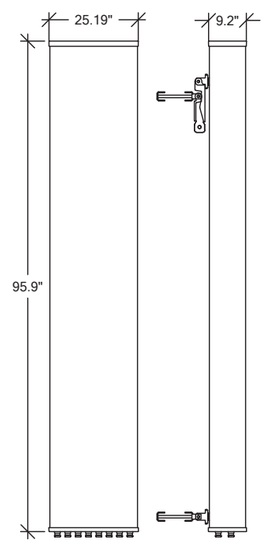

COMMSCOPE ANTENNA DATA

MECHANICAL SPECIFICATIONS				
PART NUMBER	HEIGHT	WIDTH	DEPTH	WEIGHT
FFVV-65C-R3-V1	95.9 in	25.19 in	9.2 in	124.5 lbs
CONNECTORS	STANDARD MOUNTING HARDWARE			
(8) 7-16 DIN	INCLUDED			

ELECTRICAL SPECIFICATIONS			
FREQUENCY	POLARIZATION	GAIN	AZIMUTH B.W.
617-2690 MHz	±45°	16-18.6 dBi	57°- 68°
	VSWR	MAX INPUT POWER	ELEVATION B.W.
	<1.5:1	250 WATTS	4.1° - 10.2°

2 RF-1 **FFVV-65C-R3-V1 ANTENNA DETAIL**
SCALE: NTS

T-Mobile

PROJECT INFORMATION:

WELLER KING/FUJISADA CONDOS
SE03494E

510 6TH AVE S
SEATTLE, WA 98104

ISSUED FOR:

BUILDING PERMIT

REVISION HISTORY:

NO.	DATE:	DESCRIPTION:	CHK. BY:
19	5/31/2022	UPDATED STRUCTURAL SHEETS ADDED	BJT
18	5/29/2022	UPDATED STRUCTURAL SHEETS ADDED	BJT
17	5/25/2022	MINOR REV	BJT
16	5/24/2022	MINOR REV	BJT
15	5/18/2022	MINOR REV	BJT
14	5/17/2022	REVISED PER OWNER COMMENTS	BJT
13	5/9/2022	REVISED STRUCTURAL SHEETS ADDED	BJT
12	4/28/2022	MINOR REV	BJT
11	4/27/2022	MINOR REV	BJT
10	4/20/2022	REVISED PER REDLINES	BJT
9	4/8/2022	RELOCATED ANTENNAS, REVISED PER SITE WALK	BJT

PLANS PREPARED BY:

B. J. THOMAS, P.E.
7607 80TH AVE NE
MARYSVILLE, WA 98270
206-851-1106

DRAWN BY:	CHK. BY:
JL	BJ

LICENSURE:

B. J. THOMAS STATE OF WASHINGTON REGISTERED PROFESSIONAL ENGINEER
5/31/2022

JURISDICTIONAL APPROVAL:

DRAWING TITLE:

RF DETAILS

DRAWING NUMBER:

RF-1

NOKIA ITEM CODE/SECTOR		PRODUCT NAME
474335A	x 2	FOCZ QSFP+ 4x10 km SM
474385A	x 2	FOUF SFP+ 10GBASE-LR 1271 nm CWDM 10 km SM
474386A	x 2	FOUG SFP+ 10GBASE-LR 1291 nm CWDM 10 km SM
474387A	x 1	FOUH SFP+ 10GBASE-LR 1311 nm CWDM 10 km SM
474388A	x 1	FOUI SFP+ 10GBASE-LR 1331 nm CWDM 10 km SM
474829A	x 2	AOSB QSFP28 SM 10 km LC
FTLX1370W4BTL	x 4	SM SFP 1310 nm CPRI 9.8G 1.4km (CPRI)
473471A	x 3	FOTA Optical SFP+ 10GBase-SR 850nm MM
FTLX8573D3BTL	x 3	10Gb/s 850nm Multimode SFP+ Datacom Transceiver

NOTE:
JDSU AND EXFO GEAR CAN BE USED TO READ WAVELENGTH ON THE SFPs.

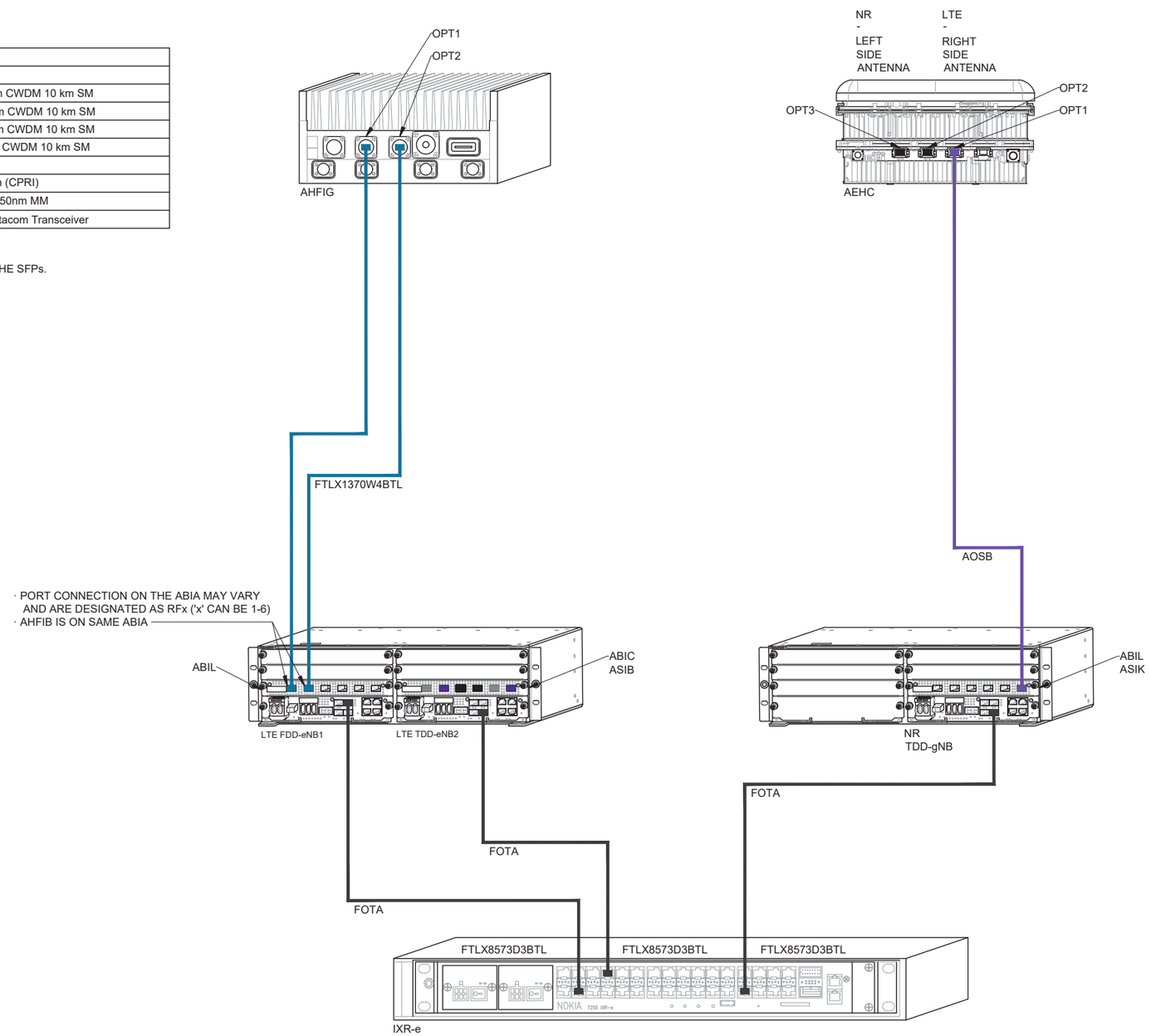

T-Mobile

PROJECT INFORMATION:

WELLER KING/FUJISADA CONDOS
SE03494E

510 6TH AVE S
SEATTLE, WA 98104

ISSUED FOR:

BUILDING PERMIT

REVISION HISTORY:

NO.	DATE:	DESCRIPTION:	CHK. BY:
19	5/31/2022	UPDATED STRUCTURAL SHEETS ADDED	BJT
18	5/29/2022	UPDATED STRUCTURAL SHEETS ADDED	BJT
17	5/25/2022	MINOR REV	BJT
16	5/24/2022	MINOR REV	BJT
15	5/18/2022	MINOR REV	BJT
14	5/17/2022	REVISED PER OWNER COMMENTS	BJT
13	5/9/2022	REVISED STRUCTURAL SHEETS ADDED	BJT
12	4/28/2022	MINOR REV	BJT
11	4/27/2022	MINOR REV	BJT
10	4/20/2022	REVISED PER REDLINES	BJT
9	4/8/2022	RELOCATED ANTENNAS, REVISED PER SITE WALK	BJT

PLANS PREPARED BY:

B. J. THOMAS, P.E.
7607 80TH AVE NE
MARYSVILLE, WA 98270
206-851-1106

DRAWN BY:	CHK. BY:
JL	BJ

LICENSURE:

B J Thomas
5/31/2022
B. J. THOMAS
STATE OF WASHINGTON
REGISTERED PROFESSIONAL ENGINEER

JURISDICTIONAL APPROVAL:

DRAWING TITLE:

SFP DETAILS

DRAWING NUMBER:

RF-1.1

Configuration 56790EZ_SR_R

* For 5G and LTE Airscale BB dimensioning refer to Fiber Port matrices.
(Alpha, Beta & Gamma)

DRAFT

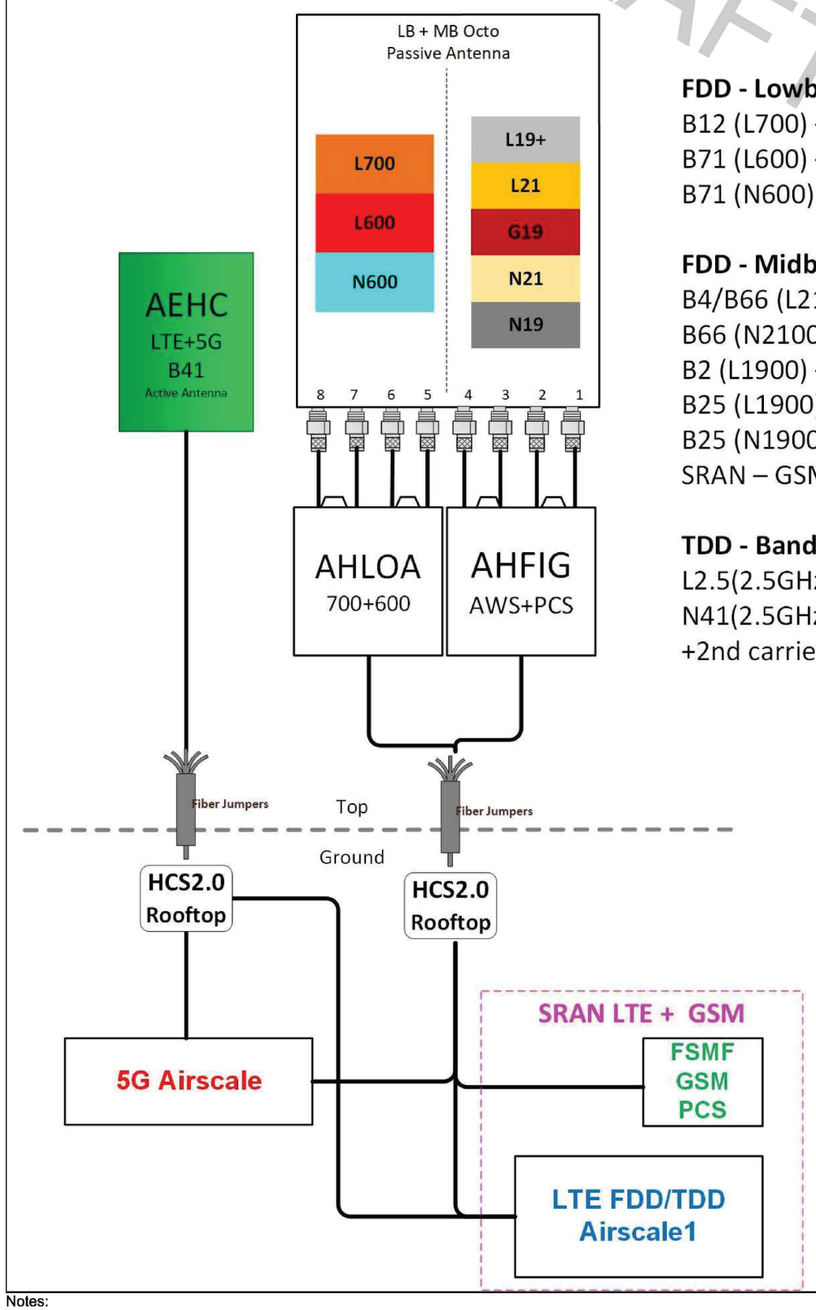

FDD - Lowband
B12 (L700) – 5 MHz
B71 (L600) –10 MHz
B71 (N600) – 15 MHz

FDD - Midband
B4/B66 (L2100) – 20 MHz
B66 (N2100) – 20 MHz
B2 (L1900) – 20 MHz
B25 (L1900) – 20 MHz
B25 (N1900) – 20 MHz
SRAN – GSM PCS

TDD - Band 41
L2.5(2.5GHz)– 60 MHz
N41(2.5GHz) – 100MHz
+2nd carrier (<=80MHz)

Notes:

T-Mobile

PROJECT INFORMATION:

WELLER KING/FUJISADA CONDOS
SE03494E

510 6TH AVE S
SEATTLE, WA 98104

ISSUED FOR:

BUILDING PERMIT

REVISION HISTORY:

NO.	DATE:	DESCRIPTION:	CHK. BY:
19	5/31/2022	UPDATED STRUCTURAL SHEETS ADDED	BJT
18	5/29/2022	UPDATED STRUCTURAL SHEETS ADDED	BJT
17	5/25/2022	MINOR REV	BJT
16	5/24/2022	MINOR REV	BJT
15	5/18/2022	MINOR REV	BJT
14	5/17/2022	REVISED PER OWNER COMMENTS	BJT
13	5/9/2022	REVISED STRUCTURAL SHEETS ADDED	BJT
12	4/28/2022	MINOR REV	BJT
11	4/27/2022	MINOR REV	BJT
10	4/20/2022	REVISED PER REDLINES	BJT
9	4/8/2022	RELOCATED ANTENNAS, REVISED PER SITE WALK	BJT

PLANS PREPARED BY:

B. J. THOMAS, P.E.
7607 80TH AVE NE
MARYSVILLE, WA 98270
206-851-1106

DRAWN BY: JL
CHK. BY: BJ

LICENSURE:

B. J. THOMAS
STATE OF WASHINGTON
REGISTERED PROFESSIONAL ENGINEER
5/31/2022

JURISDICTIONAL APPROVAL:

DRAWING TITLE:

RF DETAILS

DRAWING NUMBER:

RF-2

PURCELL "HPL3" BATTERY CABINET		
MANUFACTURER: PURCELL		
HEIGHT: 60.4"	DEPTH: 31.6"	WIDTH: 30"
MAX WEIGHT: 2206 lbs		
OPTIONAL: AIR CONDITIONER, AC POWER COMPARTMENT, AND REAR PANEL.		
NOTE: WIRES RUN THROUGH PROVIDED KNOCKOUT FOLLOW PROPER INSTALLATION OF GASKET BEFORE MATING THE 2 CABINETS.		

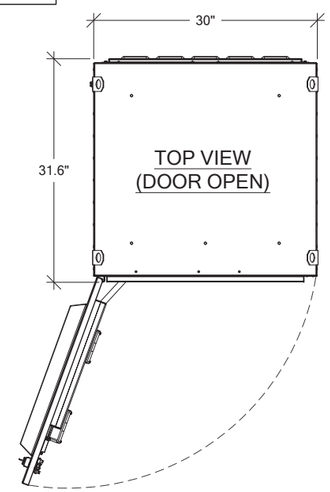

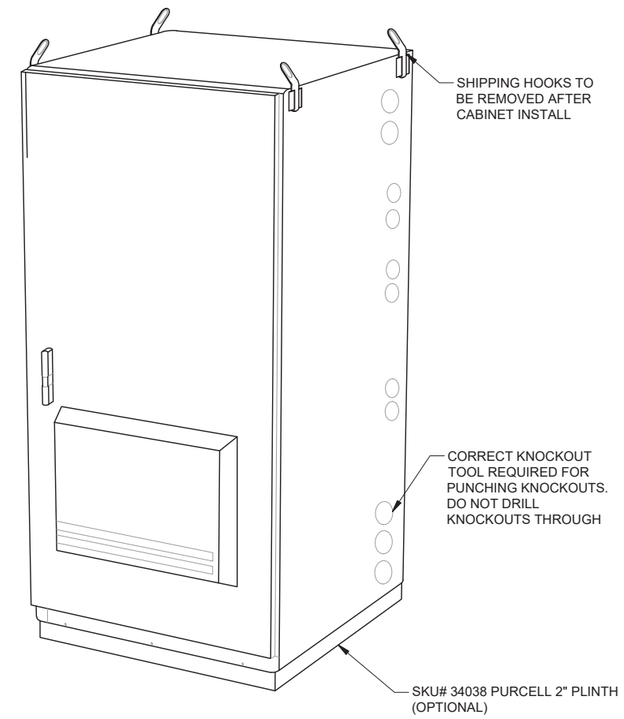

BATTERY COMPLIANCE NOTE:

PROPOSED FINAL BATTERY CONFIGURATION TO CONSIST OF (16) LEAD ACID BATTERIES. 2018 IFC/SFC COMPLIANCE: EACH BATTERY IS RATED AT 2.28 kWh (12Vx190AH/1000) FOR A TOTAL OF 36.48kWh. AS THIS DOES NOT EXCEED THE 70kWh THRESHOLD LISTED IN TABLE 1206.2 OF THE 2018 INTERNATIONAL FIRE CODE/SEATTLE FIRE CODE, COMPLIANCE WITH 2018 IFC/SFC SECTIONS 1206.2.1 THROUGH 1206.2.12.6 IS NOT REQUIRED.

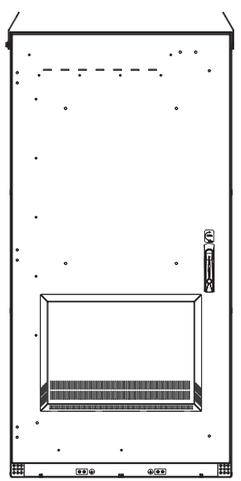

FRONT
(DAC DOOR)

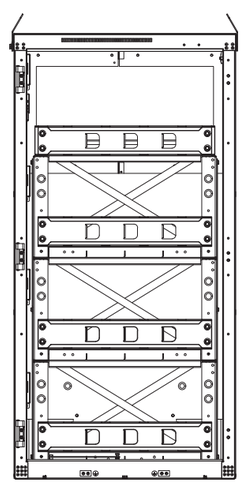

FRONT
(DOOR REMOVED)

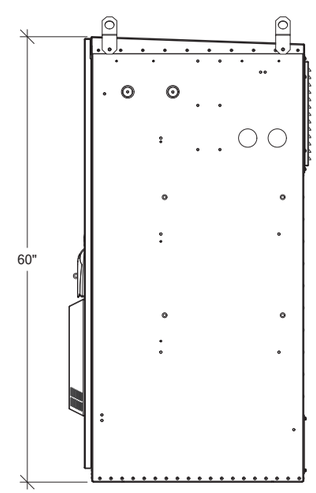

RIGHT VIEW
(DAC DOOR)

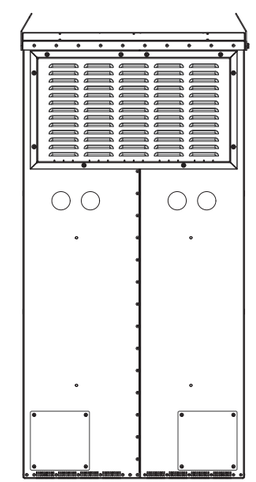

REAR VIEW

2 / A-3 **PURCELL "HPL3" BATTERY CABINET DETAILS**
SCALE: NTS

T-Mobile

PROJECT INFORMATION:

WELLER KING/FUJISADA CONDOS
SE03494E

510 6TH AVE S
SEATTLE, WA 98104

ISSUED FOR:

BUILDING PERMIT

REVISION HISTORY:

NO.	DATE:	DESCRIPTION:	CHK. BY:
19	5/31/2022	UPDATED STRUCTURAL SHEETS ADDED	BJT
18	5/29/2022	UPDATED STRUCTURAL SHEETS ADDED	BJT
17	5/25/2022	MINOR REV	BJT
16	5/24/2022	MINOR REV	BJT
15	5/18/2022	MINOR REV	BJT
14	5/17/2022	REVISED PER OWNER COMMENTS	BJT
13	5/9/2022	REVISED STRUCTURAL SHEETS ADDED	BJT
12	4/28/2022	MINOR REV	BJT
11	4/27/2022	MINOR REV	BJT
10	4/20/2022	REVISED PER REDLINES	BJT
9	4/8/2022	RELOCATED ANTENNAS, REVISED PER SITE WALK	BJT

PLANS PREPARED BY:

B. J. THOMAS, P.E.
7607 80TH AVE NE
MARYSVILLE, WA 98270
206-851-1106

DRAWN BY:	CHK. BY:
JL	BJ

LICENSURE:

B. J. THOMAS
STATE OF WASHINGTON
REGISTERED PROFESSIONAL ENGINEER
5/31/2022

JURISDICTIONAL APPROVAL:

DRAWING TITLE:

BTS EQUIPMENT DETAILS

DRAWING NUMBER:

A-3

PURCELL "HPL3" 600A LARGE SITE SUPPORT CABINET SPECS:		
MANUFACTURER: PURCELL		
HEIGHT: 72"	DEPTH: 48"	WIDTH: 30"
CABINET WEIGHT: 430LBS		

NOTE:
ADDITIONAL KNOCKOUTS MAY BE REQUIRED AND CAN BE DRILLED ON SITE AS NECESSARY. FOR CABINETS STARTING AT 501 THERE WILL BE A TOTAL OF (8) KNOCKOUTS (2) HORIZONTAL ROWS OF (4)

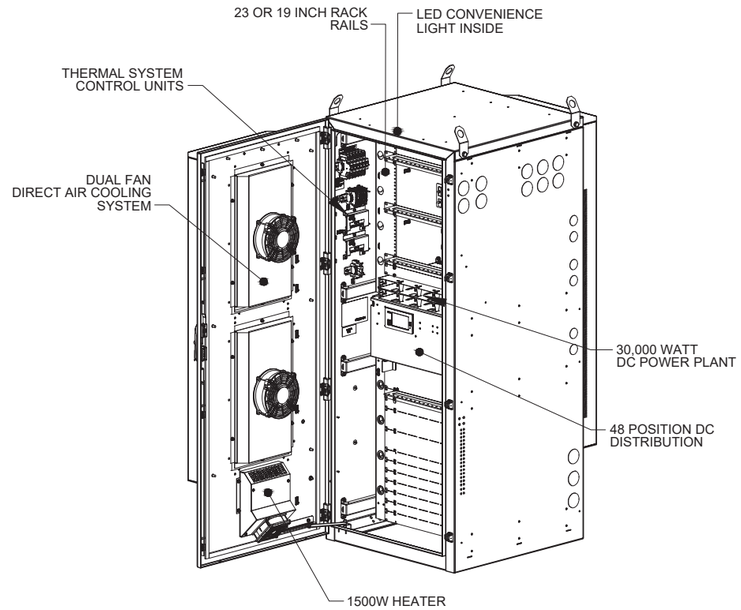

ISO VIEW

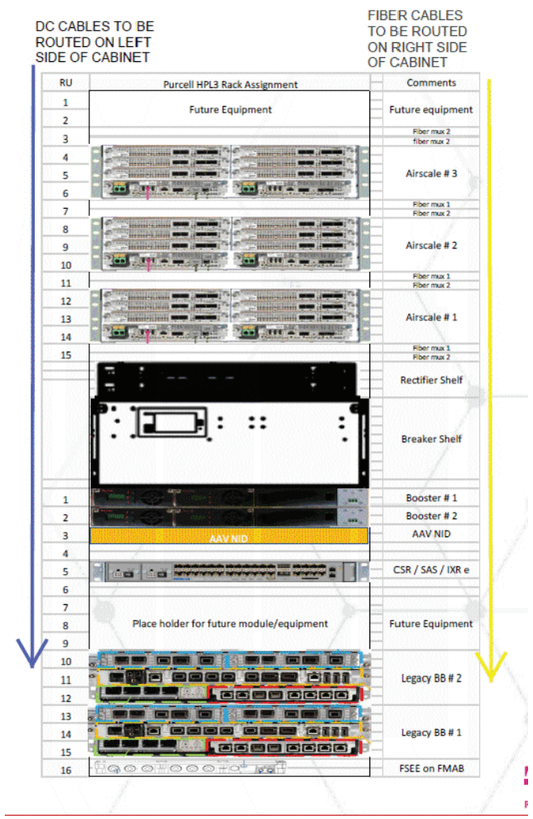

INTERNAL ROUTING

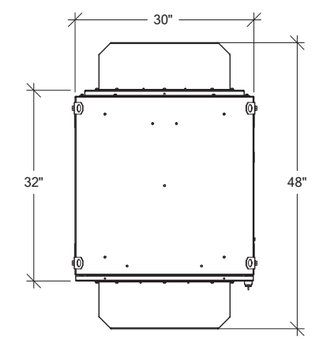

TOP VIEW

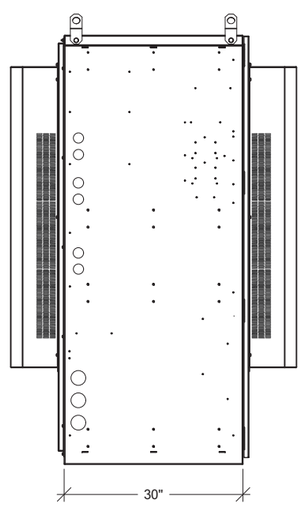

LEFT VIEW

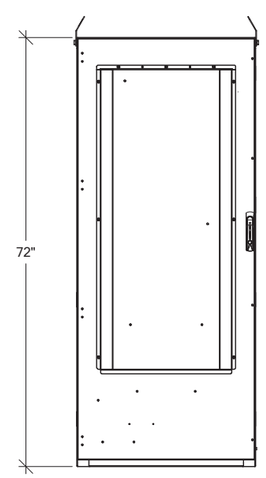

FRONT VIEW

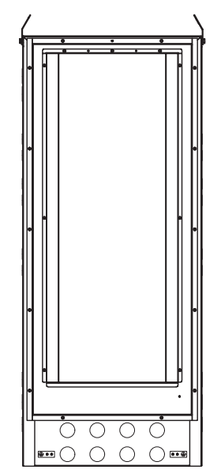

REAR VIEW

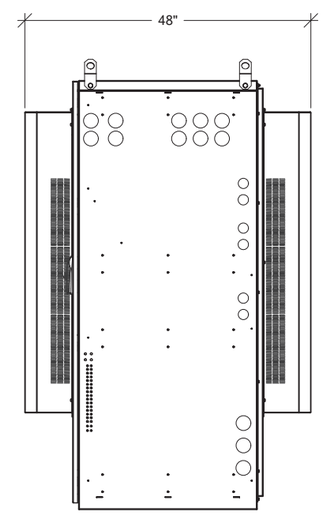

RIGHT VIEW

2 A-3.1 **PURCELL "HPL3" 600A LARGE SITE SUPPORT CABINET DETAILS**
SCALE: NTS

T-Mobile

PROJECT INFORMATION:

WELLER KING/FUJISADA CONDOS
SE03494E

510 6TH AVE S
SEATTLE, WA 98104

ISSUED FOR:

BUILDING PERMIT

REVISION HISTORY:

NO.	DATE:	DESCRIPTION:	CHK. BY:
19	5/31/2022	UPDATED STRUCTURAL SHEETS ADDED	BJT
18	5/29/2022	UPDATED STRUCTURAL SHEETS ADDED	BJT
17	5/25/2022	MINOR REV	BJT
16	5/24/2022	MINOR REV	BJT
15	5/18/2022	MINOR REV	BJT
14	5/17/2022	REVISED PER OWNER COMMENTS	BJT
13	5/9/2022	REVISED STRUCTURAL SHEETS ADDED	BJT
12	4/28/2022	MINOR REV	BJT
11	4/27/2022	MINOR REV	BJT
10	4/20/2022	REVISED PER REDLINES	BJT
9	4/8/2022	RELOCATED ANTENNAS, REVISED PER SITE WALK	BJT

PLANS PREPARED BY:

B. J. THOMAS, P.E.
7607 80TH AVE NE
MARYSVILLE, WA 98270
206-851-1106

DRAWN BY: JL **CHK. BY:** BJ

LICENSURE:

B J Thomas
5/31/2022
B. J. THOMAS STATE OF WASHINGTON REGISTERED PROFESSIONAL ENGINEER

JURISDICTIONAL APPROVAL:

DRAWING TITLE:

BTS EQUIPMENT DETAILS

DRAWING NUMBER:

A-3.1

MANUFACTURER:	NOKIA
MODEL:	ASIB
DIMENSION (HxWxD)	1.7" x 8.6" x 14.2"
WEIGHT:	6.4 LBS

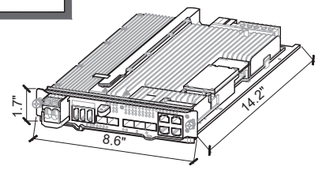

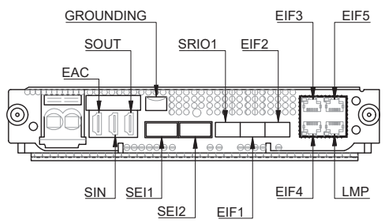

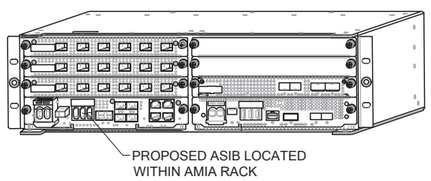

1 / A-4 **ASIB DETAIL**
SCALE: NTS

MANUFACTURER:	NOKIA
MODEL:	ABIA
DIMENSION (HxWxD)	1.1" x 8.6" x 14.2"
WEIGHT:	4.6 LBS

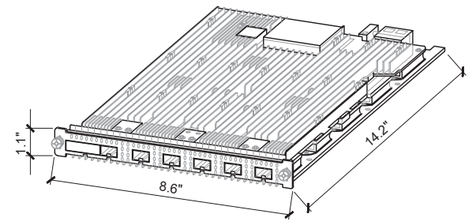

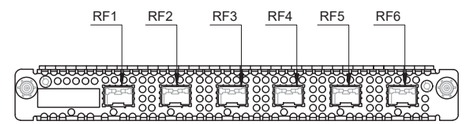

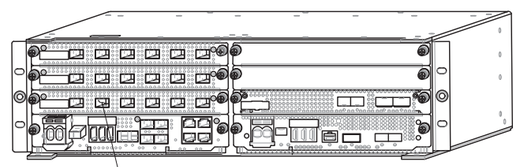

2 / A-4 **ABIA DETAIL**
SCALE: NTS

MANUFACTURER:	NOKIA
MODEL:	ABIL
DIMENSION (HxWxD)	1.1" x 8.6" x 14.2"
WEIGHT:	4.4 LBS

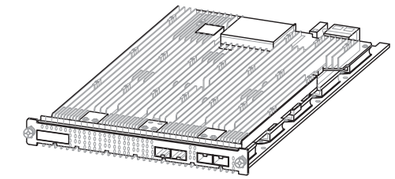

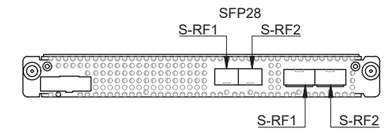

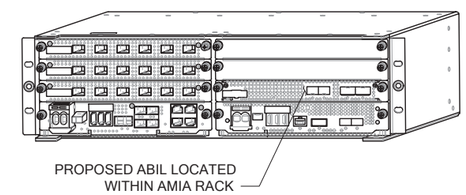

3 / A-4 **ABIL DETAIL**
SCALE: NTS

MANUFACTURER:	NOKIA
MODEL:	ABIC
DIMENSION (HxWxD)	1.7" x 8.6" x 14.2"
WEIGHT:	5.8 LBS

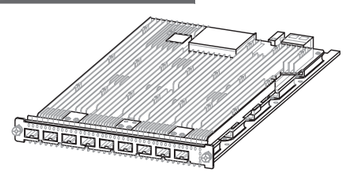

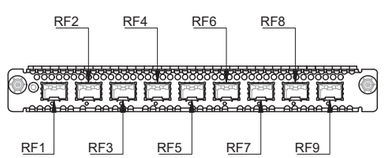

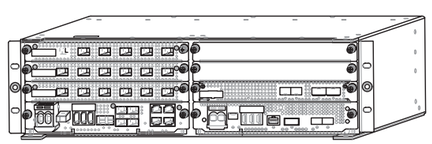

4 / A-4 **ABIC DETAIL**
SCALE: NTS

MANUFACTURER:	NOKIA
MODEL:	ASIA
DIMENSION (HxWxD)	1.7" x 8.6" x 14.2"
WEIGHT:	6.8 LBS

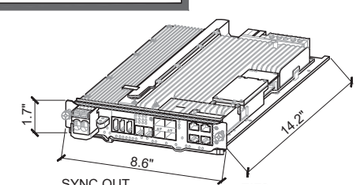

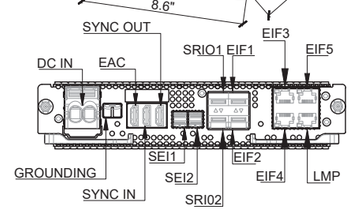

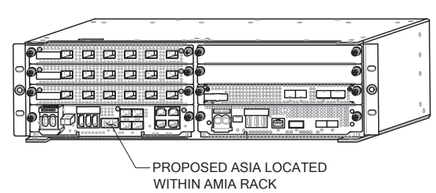

5 / A-4 **ASIA DETAIL**
SCALE: NTS

MANUFACTURER:	NOKIA
MODEL:	ASIK
DIMENSION (HxWxD)	1.7" x 8.6" x 14.2"
WEIGHT:	6.6 LBS

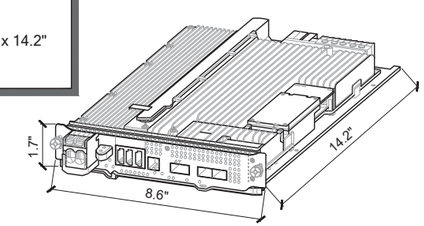

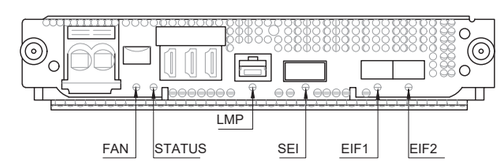

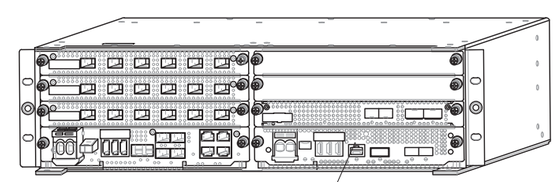

6 / A-4 **ASIK DETAIL**
SCALE: NTS

T-Mobile

PROJECT INFORMATION:

WELLER KING/FUJISADA CONDOS
SE03494E

510 6TH AVE S
SEATTLE, WA 98104

ISSUED FOR:

BUILDING PERMIT

REVISION HISTORY:

NO.	DATE:	DESCRIPTION:	CHK. BY:
19	5/31/2022	UPDATED STRUCTURAL SHEETS ADDED	BJT
18	5/29/2022	UPDATED STRUCTURAL SHEETS ADDED	BJT
17	5/25/2022	MINOR REV	BJT
16	5/24/2022	MINOR REV	BJT
15	5/18/2022	MINOR REV	BJT
14	5/17/2022	REVISED PER OWNER COMMENTS	BJT
13	5/9/2022	REVISED STRUCTURAL SHEETS ADDED	BJT
12	4/28/2022	MINOR REV	BJT
11	4/27/2022	MINOR REV	BJT
10	4/20/2022	REVISED PER REDLINES	BJT
9	4/8/2022	RELOCATED ANTENNAS, REVISED PER SITE WALK	BJT

PLANS PREPARED BY:

B. J. THOMAS, P.E.
7607 80TH AVE NE
MARYSVILLE, WA 98270
206-851-1106

DRAWN BY:	CHK. BY:
JL	BJ

LICENSURE:

B. J. THOMAS
STATE OF WASHINGTON
REGISTERED PROFESSIONAL ENGINEER
5/31/2022

JURISDICTIONAL APPROVAL:

DRAWING TITLE:

GENERAL DETAILS

DRAWING NUMBER:

A-4

MANUFACTURER:	NOKIA
MODEL:	AMIA
DIMENSION (HxWxD)	5.1" x 15.7" x 17.6"
WEIGHT:	11.2 LBS (UNIT ONLY)

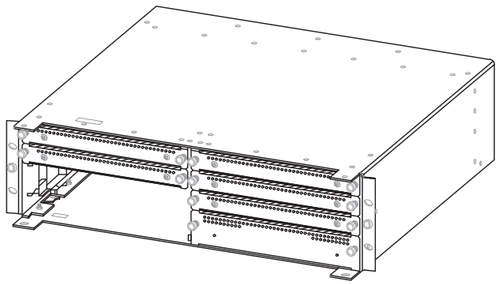

1 / A-5 **AMIA DETAIL**
SCALE: NTS

MANUFACTURER:	NOKIA
MODEL:	FSMF
DIMENSION (HxWxD)	5.2" x 17.6" x 16.5"
WEIGHT:	25.3 LBS

NOTE:
FSMF SHALL BE PLACED WITHIN RADIO CABINET PER T-MOBILE REQUIREMENTS

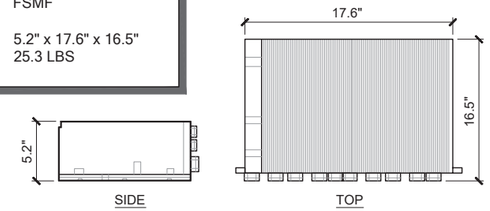

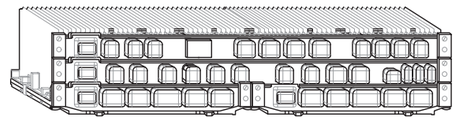

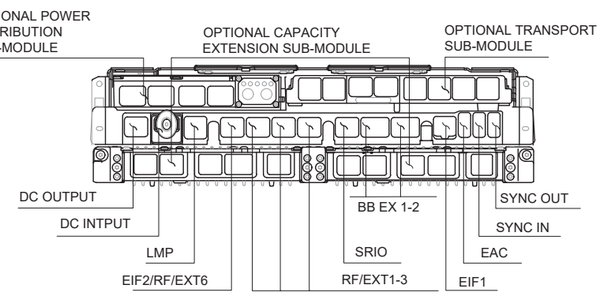

2 / A-5 **FSMF DETAIL**
SCALE: NTS

MANUFACTURER:	NOKIA
MODEL:	IXR-e
DIMENSION (HxWxD)	17.25" x 10.0" x 1.75"
WEIGHT:	TBD

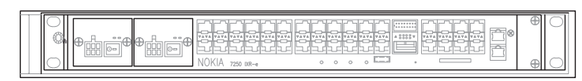

3 / A-5 **IXR-e DETAIL**
SCALE: NTS

POWER PLUS 100-3-1U

TOTAL POWER:	19.5 kW
MAX OUTPUT CURRENT:	300 A
MAX INPUT CURRENT:	100 A
DIMENSION (MODULE) (HxWxD)	1.61" x 5.12" x 6.85"
WEIGHT (MODULE):	2.14lbs
NET WEIGHT (RACK):	11.24lbs

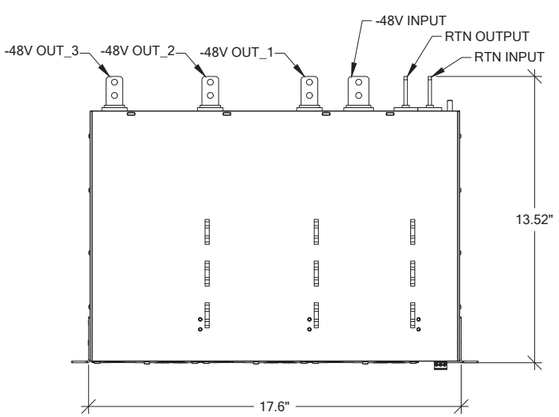

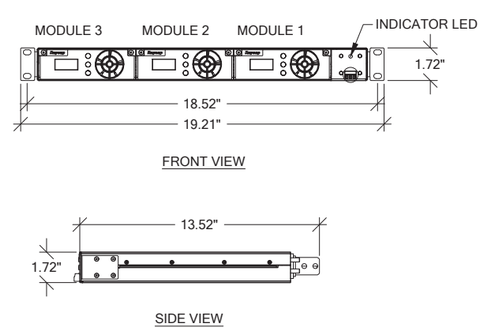

4 / A-5 **VOLTAGE BOOSTER DETAIL**
SCALE: NTS

NOTE:
-PROPOSED RRUs TO BE MOUNTED VERTICALLY ONLY
-MOUNTING PIPE NOT SHOWN FOR CLARITY

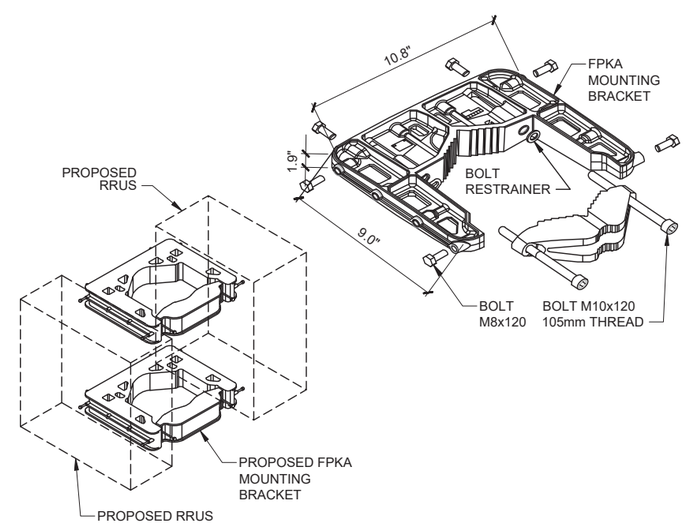

5 / A-5 **FPKA DETAIL**
SCALE: NTS

T-Mobile

PROJECT INFORMATION:

WELLER KING/FUJISADA CONDOS
SE03494E

510 6TH AVE S
SEATTLE, WA 98104

ISSUED FOR:

BUILDING PERMIT

REVISION HISTORY:

NO.	DATE:	DESCRIPTION:	CHK. BY:
19	5/31/2022	UPDATED STRUCTURAL SHEETS ADDED	BJT
18	5/29/2022	UPDATED STRUCTURAL SHEETS ADDED	BJT
17	5/25/2022	MINOR REV	BJT
16	5/24/2022	MINOR REV	BJT
15	5/18/2022	MINOR REV	BJT
14	5/17/2022	REVISED PER OWNER COMMENTS	BJT
13	5/9/2022	REVISED STRUCTURAL SHEETS ADDED	BJT
12	4/28/2022	MINOR REV	BJT
11	4/27/2022	MINOR REV	BJT
10	4/20/2022	REVISED PER REDLINES	BJT
9	4/8/2022	RELOCATED ANTENNAS, REVISED PER SITE WALK	BJT

PLANS PREPARED BY:

B. J. THOMAS, P.E.
7607 80TH AVE NE
MARYSVILLE, WA 98270
206-851-1106

DRAWN BY:	CHK. BY:
JL	BJ

LICENSURE:

B. J. Thomas
5/31/2022

JURISDICTIONAL APPROVAL:

DRAWING TITLE:

GENERAL DETAILS

DRAWING NUMBER:

A-5

RADIO MODULE FOR 600/700MHz RRH

MANUFACTURER:	NOKIA
MODEL:	AHLOA
NET WEIGHT:	83.78 LBS
DIMENSION (LxWxD)	22.05" x 12.13" x 7.44"

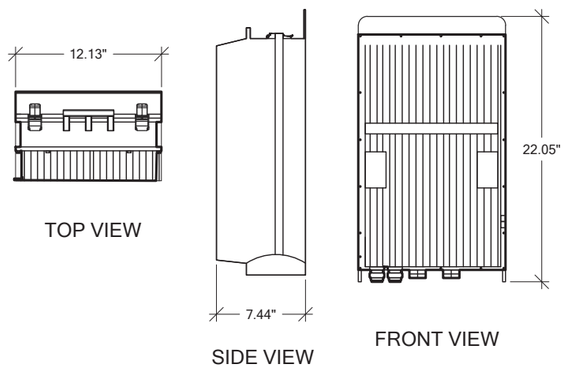

1 / A-6 **AHLOA DETAIL**
SCALE: NTS

FIBER & POWER JUNCTION BOX W/ OVP

MANUFACTURER:	COMMSCOPE
MODEL:	FE-16148-OVP-RT12
DIMENSION (HxWxD)	16" x 14" x 8"
WEIGHT:	23.5lbs

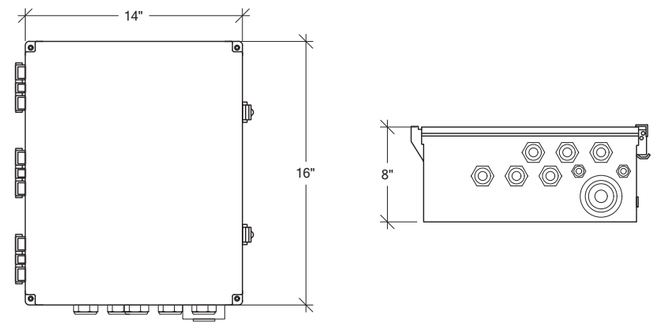

2 / A-6 **ROOFTOP OVP/JUNCTION BOX DETAIL**
SCALE: NTS

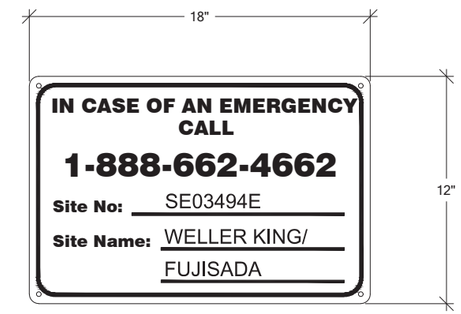

3 / A-6 **SITE SIGNAGE DETAIL**
SCALE: NTS

MANUFACTURER:	NOKIA
MODEL:	AHFIG
WEIGHT:	70.5 LBS
DIMENSION (LxWxD) w/ COVER	28.74" x 12.87" x 5.59"

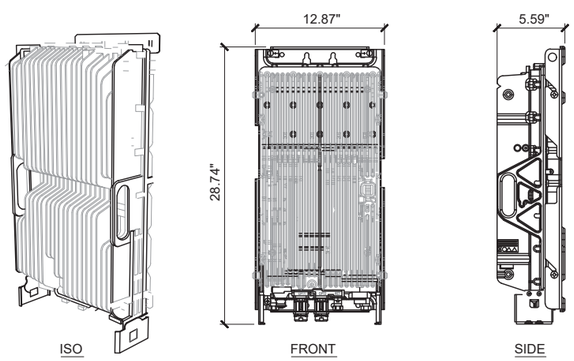

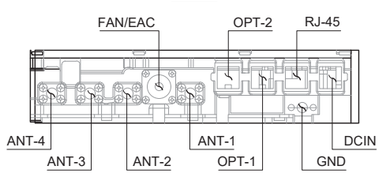

4 / A-6 **AHFIG DETAIL**
SCALE: NTS

General Specifications

Cable Type	HFT410-4SNOK2-xx	HFT410-4SNOK3-xx (for FASB)
Brand	HELIAX® FiberFeed®	HELIAX® FiberFeed®
Total Fiber Quantity	4	4
Fiber Type	Bend insensitive single mode fiber (G.657.A2)	Bend insensitive single mode fiber (G.657.A2)
Jacket Color	Black	Black
Dimensions		
Cable Weight	456.1 kg/km | 306.5 lb/kft	456.1 kg/km | 306.5 lb/kft
Breakout Length Fiber, end 1	815 mm | 32 in	1560 mm | 61 in
Breakout Length Power, end 1	895 mm | 35 in	457 mm | 18 in
Breakout Length Fiber, end 2	600 mm | 24 in	600 mm | 24 in
Diameter Over Jacket	1831 mm | 0.72 in	1831 mm | 0.72 in
Physical Specifications		
Minimum Bend Radius, loaded	365.8 mm | 14.4 in	365.8 mm | 14.4 in
Minimum Bend Radius, unloaded	221.0 mm | 8.7 in	221.0 mm | 8.7 in
Tensile Load, long term, maximum	801 N | 180 lbf	801 N | 180 lbf
Tensile Load, short term, maximum	2669 N | 600 lbf	2669 N | 600 lbf

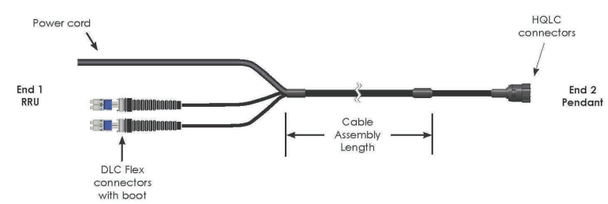

5 / A-6 **HCS 2.0 HYBRID JUMPER DETAIL**
SCALE: NTS

HELIAX FiberFeed Hybrid Jumpers

FiberFeed hybrid jumpers are constructed specifically for the conditions of the last few feet to the RRUs.

Features

- Smallest cable diameter for high flexibility
- Corrugated aluminum shield resists bird/animal damag
- Exact fit to Pendant and RRU

Specifications

Cable Series	# of Power Conductors	# of Fibers	End 1 Power Breakout (inches)	End 1 Fiber Breakout (inches)	End 2 Fiber Breakout (inches)
Hybrid Jumpers 10 AWG power conductor wire 4 Single mode fibers					
HFT410-4SNOK2	4	4	35	32	24
HFT410-4SNOK3	4	4	18	61	24

Hybrid Jumpers for Nokia Radios

Ordering Information

Description	Length (feet)	Part Number
Hybrid Jumpers for Nokia Radios End 1: 4 fibers terminated DLC for Nokia RRUs with flush cut power cord (red/black conductors). End 2: 4 fibers terminated LC and 4 X 10 AWG conductors terminated at hybrid trunk connector (HQLC)	6	HFT410-4SNOK2-6
	10	HFT410-4SNOK2-10
	15	HFT410-4SNOK2-15
	20	HFT410-4SNOK2-20
	25	HFT410-4SNOK2-25
	30	HFT410-4SNOK2-30
	40	HFT410-4SNOK2-40
	50	HFT410-4SNOK2-50
	60	HFT410-4SNOK2-60
	70	HFT410-4SNOK2-70
	80	HFT410-4SNOK2-80
	90	HFT410-4SNOK2-90
	100	HFT410-4SNOK2-100

Note: Longer lengths are available; contact your CommScope sales representative for details.

T-Mobile

PROJECT INFORMATION:

WELLER KING/FUJISADA CONDOS
SE03494E

510 6TH AVE S
SEATTLE, WA 98104

ISSUED FOR:

BUILDING PERMIT

REVISION HISTORY:

NO.	DATE:	DESCRIPTION:	CHK. BY:
19	5/31/2022	UPDATED STRUCTURAL SHEETS ADDED	BJT
18	5/29/2022	UPDATED STRUCTURAL SHEETS ADDED	BJT
17	5/25/2022	MINOR REV	BJT
16	5/24/2022	MINOR REV	BJT
15	5/18/2022	MINOR REV	BJT
14	5/17/2022	REVISED PER OWNER COMMENTS	BJT
13	5/9/2022	REVISED STRUCTURAL SHEETS ADDED	BJT
12	4/28/2022	MINOR REV	BJT
11	4/27/2022	MINOR REV	BJT
10	4/20/2022	REVISED PER REDLINES	BJT
9	4/8/2022	RELOCATED ANTENNAS, REVISED PER SITE WALK	BJT

PLANS PREPARED BY:

B. J. THOMAS, P.E.
7607 80TH AVE NE
MARYSVILLE, WA 98270
206-851-1106

DRAWN BY: JL **CHK. BY:** BJ

LICENSURE:

B. J. THOMAS STATE OF WASHINGTON REGISTERED PROFESSIONAL ENGINEER
5/31/2022

JURISDICTIONAL APPROVAL:

DRAWING TITLE:

GENERAL DETAILS

DRAWING NUMBER:

A-6

YELLOW

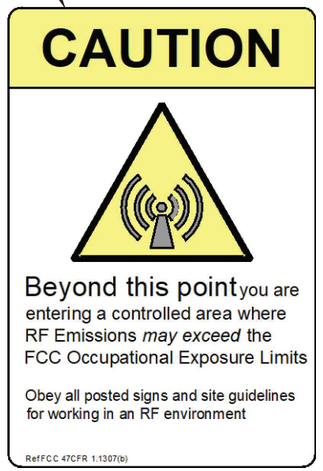

NOTES:

1. 8" X 12" ALUMINUM.
2. POSTED AT EACH ANTENNA ARRAY ON ROOFTOP SITE.
3. BUILDING OWNER MAY HAVE RESTRICTIONS ON WHERE SIGNS CAN BE POSTED.

1 / A-7 RF CAUTION SIGNAGE DETAIL
SCALE: NTS

BLUE

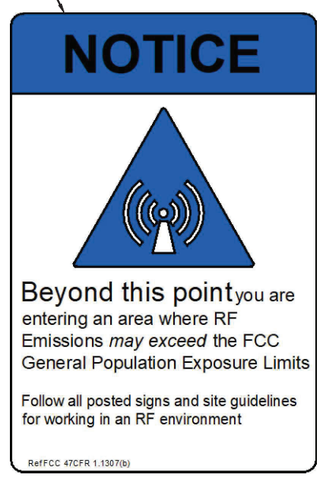

NOTES:

1. 8" X 12" ALUMINUM.
2. POSTED AT EACH ENTRANCE (GATE, DOOR, HATCHWAY, ETC.).
3. BUILDING OWNER MAY HAVE RESTRICTIONS ON WHERE SIGNS CAN BE POSTED.

2 / A-7 RF NOTICE SIGNAGE DETAIL
SCALE: NTS

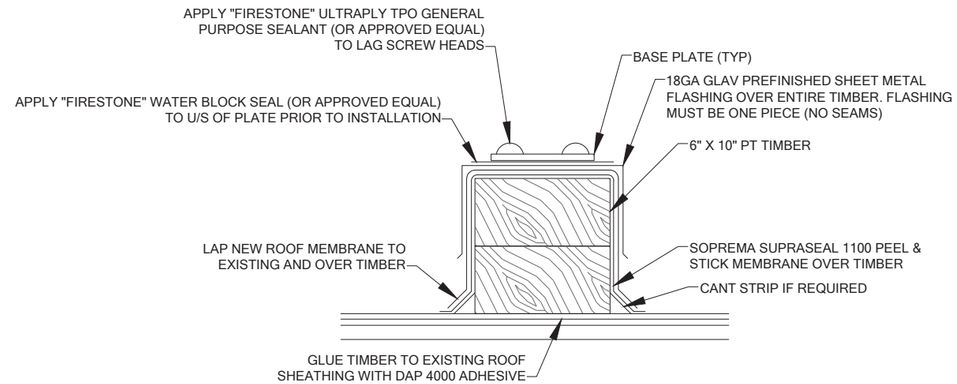

3 / A-7 FLASHING DETAIL
SCALE: NTS

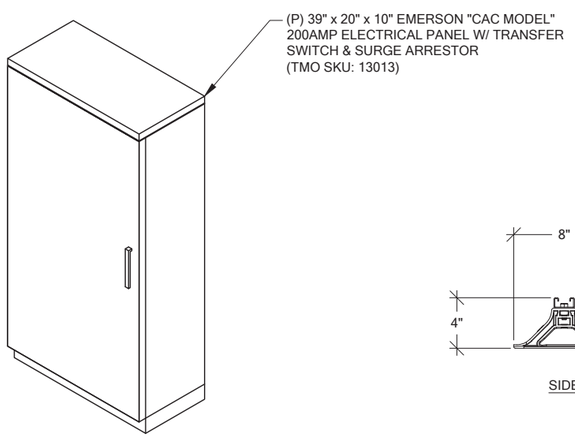

MANUFACTURER:	VERTIV
MODEL:	EMERSON CAC MODEL
DIMENSIONS:	39" x 20" x 10"
WEIGHT:	75LBS

4 / A-7 200AMP AC PANEL DETAIL
SCALE: NTS

NOTE:

1,500 LBS MAX RECOMMENDED LOAD

HOT-DIPPED GALVANIZED FINISH FOR STRUT & HARDWARE

SURFACE AREA: 140.8 SQUARE INCH

WEIGHT: 4.40 LBS (EACH)

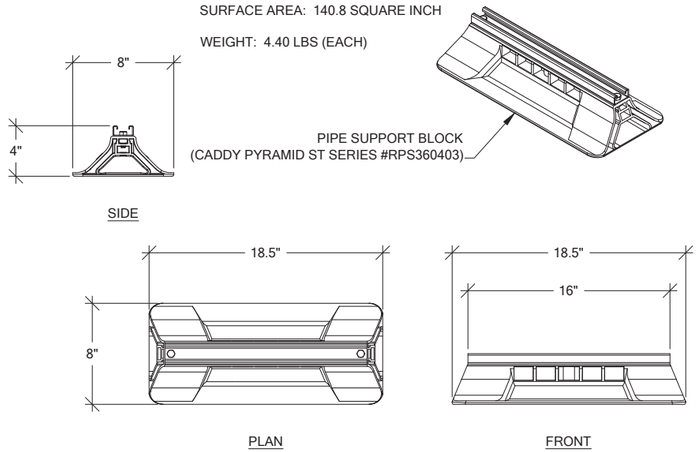

5 / A-7 PIPE SUPPORT DETAIL
SCALE: NTS

X34-35L/120 RAB

Small, general purpose lighting that's pocket friendly.

Color: Bronze Weight: 1.5 lbs

Project:	Type:
Prepared By:	Date:

Driver Info		LED Info	
Type	Constant Current	Watts	35W
120V	0.3A	Color Temp	5000K (Cool)
208V	N/A	Color Accuracy	85 CRI
240V	N/A	L70 Lifespan	50,000 Hours
277V	N/A	Lumens	3,501
Input Watts	34.1W	Efficacy	102.7 lm/W

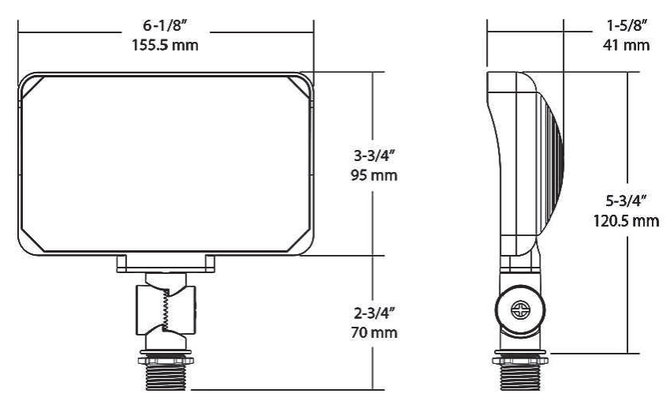

6 / A-7 LED TECH LIGHT DETAIL
SCALE: NTS

T-Mobile

PROJECT INFORMATION:

WELLER KING/FUJISADA CONDOS
SE03494E

510 6TH AVE S
SEATTLE, WA 98104

ISSUED FOR:

BUILDING PERMIT

REVISION HISTORY:

NO.	DATE:	DESCRIPTION:	CHK. BY:
19	5/31/2022	UPDATED STRUCTURAL SHEETS ADDED	BJT
18	5/29/2022	UPDATED STRUCTURAL SHEETS ADDED	BJT
17	5/25/2022	MINOR REV	BJT
16	5/24/2022	MINOR REV	BJT
15	5/18/2022	MINOR REV	BJT
14	5/17/2022	REVISED PER OWNER COMMENTS	BJT
13	5/9/2022	REVISED STRUCTURAL SHEETS ADDED	BJT
12	4/28/2022	MINOR REV	BJT
11	4/27/2022	MINOR REV	BJT
10	4/20/2022	REVISED PER REDLINES	BJT
9	4/8/2022	RELOCATED ANTENNAS, REVISED PER SITE WALK	BJT

PLANS PREPARED BY:

B. J. THOMAS, P.E.
7607 80TH AVE NE
MARYSVILLE, WA 98270
206-851-1106

DRAWN BY: JL **CHK. BY:** BJ

LICENSURE:

B. J. THOMAS
STATE OF WASHINGTON
REGISTERED PROFESSIONAL ENGINEER
5/31/2022

JURISDICTIONAL APPROVAL:

DRAWING TITLE:

GENERAL DETAILS

DRAWING NUMBER:

A-7

MASON INDUSTRIES, Inc.
Manufacturers of Vibration Control Products
350 Rabro Drive, Hauppauge, NY 11788, 631/348-0282, FAX 631/348-0279
2101 W. Crescent Ave., Suite D, Anaheim, CA 92801, 714/535-2727, FAX 714/535-5738
Info@Mason-Ind.com • www.Mason-Ind.com

ALL DIRECTIONAL CAPTIVE MOUNTING FOR SEISMIC, MOBILE, MARINE, WALL HUNG and OVERSEAS APPLICATIONS

BR

DATA SHEET DS-400-8.3A

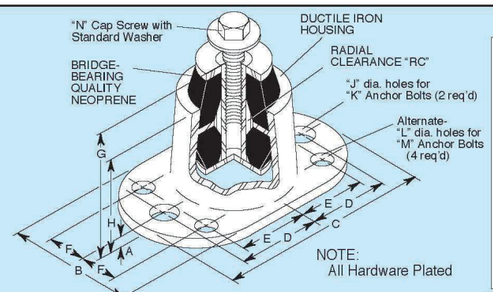

OSHPD OPA-0201
Rated Load Curves (lbs kgs)

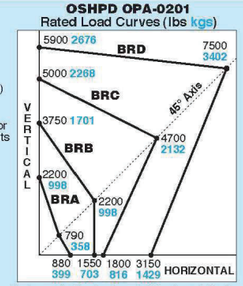

Horizontal, Vertical and 45° plotted Ratings are California OSHPD approved values having the OSHPD Anchorage Preapproval Number OPA-0201. Testing and calculations were performed to meet OSHPD criteria. BRX's have not been submitted to OSHPD.

To use approved OSHPD rated load curves: 1) Calculate Vertical and Horizontal Forces on mounting including translations and overturning moments. 2) Plot Horizontal Load vs Vertical Load. The point must fall within the area below the OSHPD curve.

TYPE BR DIMENSIONS (inches millimeters)

Type	A	B	C	D	E	F	G	H	J	K	L	M	N	RC
BRX	3/16 5	2 50	3 3/4 95	1 3/8 35	1 25	5/8 16	2 1/2 64	15/8 41	7/16 11	3/8 10	5/16 8	1/4 6	1/4-20UNC x 3/4	1/8 3
BRA	3/16 5	2 1/2 64	4 1/4 108	1 5/8 41	1 3/8 35	3/4 19	3 76	2 51	1/2 13	3/8 10	3/8 10	1/4 6	5/16-18UNC x 1	3/16 5
BRB	3/16 5	3 1/4 83	5 3/4 146	2 1/4 57	1 7/8 48	7/8 22	3 76	2 51	5/8 16	1/2 13	1/2 13	3/8 10	7/16-14UNC x 1	1/4 6
BRC	1/4 6	5 1/4 133	9 229	3 5/8 92	3 76	1 1/2 38	6 1/2 165	4 1/2 114	7/8 22	3/4 19	3/4 19	5/8 16	5/8-11UNC x 1 1/2	5/8 16
BRD	1/4 6	6 152	10 1/2 267	4 3/8 111	3 5/8 92	1 5/8 41	6 1/2 165	4 1/2 114	7/8 22	3/4 19	3/4 19	5/8 16	5/8-11UNC x 1 1/2	5/8 16

TYPE BR RATINGS

Type	Size (Color Mark)	Duro-meter	COMPRESSION Rated Capacity (lbs) (kgs)	COMPRESSION Rated Defl (in) (mm)	TENSION Rated Capacity (lbs) (kgs)	TENSION Rated Defl (in) (mm)	SHEAR Rated Capacity (lbs) (kgs)	SHEAR Rated Defl (in) (mm)	Maximum Horizontal Static G Rating*
BR-	X-Green	40	30 14	0.12 3	30 14	0.12 3	20 9	0.08 2	12.0
	X-Red	50	45 20		45 20		35 16		8.0
	X-White	60	70 32		70 32		45 20		6.0
	A-Green	40	85 39	0.2 5	85 39	0.18 5	20 9	0.13 3	10.4
	A-Red	50	125 57		125 57		30 14		7.0
	A-White	60	205 93		205 95		50 23		4.3
	A-Yellow	70	290 132		290 132		70 32		3.0
	B-Red	50	450 204	0.2 5	500 227	0.18 5	100 45	0.15 4	3.4
	B-White	60	740 336		750 340		170 77		2.1
	B-Yellow	70	1040 472		1050 476		240 109		1.5
	C-Red	50	650 295	0.3 8	750 340	0.25 6	380 172	0.50 13	2.8
	C-White	60	1100 499		1150 522		500 227		1.6
	C-Yellow	70	1540 699		1610 730		700 318		1.2
	D-White	60	2390 1084	0.3 8	2450 1111	0.25 6	750 340	0.50 13	1.3
	D-Yellow	70	3150 1429		3430 1556		1050 476		1.0

All Rated Capacities are based on proper neoprene loadings without metal to metal contact. Seismic Max. G Ratings are based on metal failure under static seismic loadings as defined in the building codes.

*Horizontal G Ratings are for quick reference only– Use OSHPD Rated Load Curves.

BRIDGE-BEARING NEOPRENE SPECIFICATIONS

ORIGINAL PHYSICAL PROPERTIES (a) Duro-meter	(b) Tensile Strength (min)	(b) Elongat. at Break (min)	TESTED FOR AGING (c) OVEN AGING(70h/212°F) Hard-ness (max)	(c) Tensile Strength (max)	(c) Elongat at Break (max)	(d) OZONE 100 ppm in air by Vol.20% Strain 100°F	COMPRES-SION SET (e) 22hrs 212°F Method B
40±5	2000 psi	450%	+15%	±15%	-40%	No Cracks	30%(max)
50±5	2250 psi	400%	+15%	±15%	-40%	No Cracks	35%(max)
60±5	2250 psi	350%	+15%	±15%	-40%	No Cracks	35%(max)
70±5	2250 psi	300%	+15%	±15%	-40%	No Cracks	35%(max)

(a)ASTM D-676 (b)ASTM D-412 (c)ASTM D-573 (d)ASTM D-1149 (e)ASTM D-395

Specification

Captive Neoprene elements shall be arranged in opposition within a steel or ductile iron housing to provide positive mechanical restraint in all directions. Neoprene elements shall prevent metal to metal contact during normal operation. Bonded assemblies without mechanical interlocks are not acceptable. Neoprene elements shall be of bridge bearing quality as tabulated.

All mountings shall have minimum 1.0 horizontal G ratings and anchorage preapproval "OPA" numbers from the Office of Statewide Health Planning and Development (OSHPD) in the state of California prior to 2010, attesting to the maximum horizontal and vertical load ratings. All mountings shall have bolts for rigid attachment to the equipment and adequate base bolting provision. Mountings shall have a minimum static deflection of 0.2" (5 mm).

In seismic zones, submittals shall include calculations showing that the intersection of the horizontal and vertical seismic loads fall below the OSHPD approved curves. Anchorages must be designed to meet the applicable building codes. All calculations must be signed by a professional engineer. Mountings shall be type BR as manufactured by Mason Industries, Inc.

Note: OSHPD changed requirements in California in 2010, but the reference remains excellent as a general guideline.

1 / A-8 **NEOPRENE CABINET MOUNT DETAIL**
SCALE: NTS

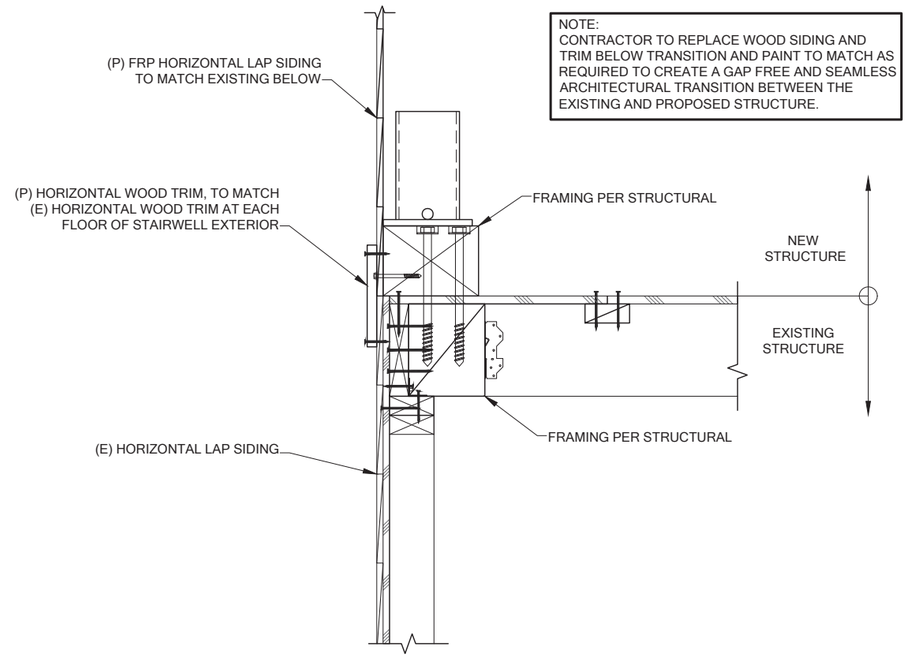

2 / A-8 **SECTION DETAIL DETAIL**
SCALE: NTS

14

T-Mobile

PROJECT INFORMATION:

WELLER KING/FUJISADA CONDOS
SE03494E

510 6TH AVE S
SEATTLE, WA 98104

ISSUED FOR:

BUILDING PERMIT

REVISION HISTORY:

NO.	DATE:	DESCRIPTION:	CHK. BY:
19	5/31/2022	UPDATED STRUCTURAL SHEETS ADDED	BJT
18	5/29/2022	UPDATED STRUCTURAL SHEETS ADDED	BJT
17	5/25/2022	MINOR REV	BJT
16	5/24/2022	MINOR REV	BJT
15	5/18/2022	MINOR REV	BJT
14	5/17/2022	REVISED PER OWNER COMMENTS	BJT
13	5/9/2022	REVISED STRUCTURAL SHEETS ADDED	BJT
12	4/28/2022	MINOR REV	BJT
11	4/27/2022	MINOR REV	BJT
10	4/20/2022	REVISED PER REDLINES	BJT
9	4/8/2022	RELOCATED ANTENNAS, REVISED PER SITE WALK	BJT

PLANS PREPARED BY:

B. J. THOMAS, P.E.
7607 80TH AVE NE
MARYSVILLE, WA 98270
206-851-1106

DRAWN BY: JL **CHK. BY:** BJ

LICENSURE:

B. J. THOMAS, STATE OF WASHINGTON, REGISTERED PROFESSIONAL ENGINEER
5/31/2022

JURISDICTIONAL APPROVAL:

DRAWING TITLE:

GENERAL DETAILS

DRAWING NUMBER:

A-8

LEGAL DESCRIPTION

NO TITLE RESEARCH PROVIDED AT THIS TIME

EASEMENTS

(#) CORRESPONDS WITH ITEM NUMBER IN 'SCHEDULE B' OF TITLE REPORT.

THE FOLLOWING EASEMENTS FROM THE REFERENCED TITLE REPORT CONTAIN SUFFICIENT INFORMATION TO BE DEPICTED ON THE PLAN. OTHER EASEMENTS OR ENCUMBRANCES, IF ANY, MAY AFFECT THE PROPERTY, BUT LACK SUFFICIENT INFORMATION TO BE SHOWN.

(#) NO TITLE RESEARCH PROVIDED AT THIS TIME

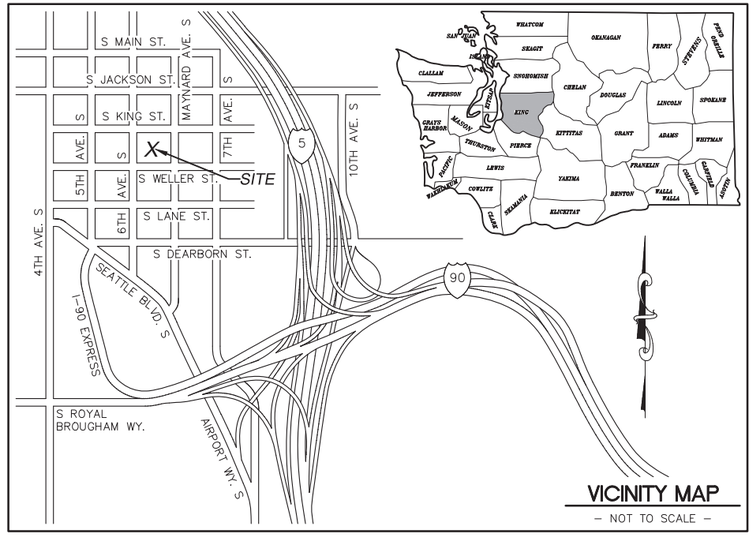

LATITUDE/LONGITUDE POSITION

COORDINATE DATA AT PROPOSED ANTENNA LOCATION:
NAD 83
LAT – 47°35'52.61" N
LONG – 122°19'32.80" W

NAVD 88
ELEV.= 53.5 FEET

LAT – 47.597948° N
LONG – 122.325779° W

NAVD 88

BENCHMARK IS BASED ON WSRN PUGET SOUND REFERENCE NETWORK.

ELEVATION DERIVED USING GPS. ACCURACY MEETS OR EXCEEDS 1A STANDARDS AS DEFINED ON THE FAA ASAC INFORMATION SHEET 91:003.

NOTES

1) NO TITLE RESEARCH PROVIDED AT THIS TIME. CALCULATED BOUNDARY MAY CHANGE UPON RECEIPT OF TITLE.
2) FIELD WORK CONDUCTED IN DECEMBER, 2021.
3) BASIS OF BEARING: WASHINGTON STATE PLANE COORDINATE SYSTEM, NORTH ZONE (NAD83/91).
4) UNDERGROUND UTILITIES SHOWN HEREON, IF ANY, WERE DELINEATED FROM SURFACE EVIDENCE AND/OR UTILITY COMPANY RECORDS. CRITICAL LOCATIONS SHOULD BE VERIFIED PRIOR TO DESIGN AND CONSTRUCTION.

BUILDING HEIGHT NOTE

AVERAGE GROUND ELEVATION IS 53.5 FEET, USING RULE 4–2012
HEIGHTS BASED ON THIS ELEVATION ARE AS FOLLOWS:
AVERAGE ROOF HT.=80.1'
PARAPET HT.=83.1'
PENTHOUSE ROOF HT.=90.4'

GRAPHIC SCALE

10 0 5 10 20 40

(IN FEET)
1 inch = 10 ft.
1 inch = 20 ft. (11x17 SHEET)

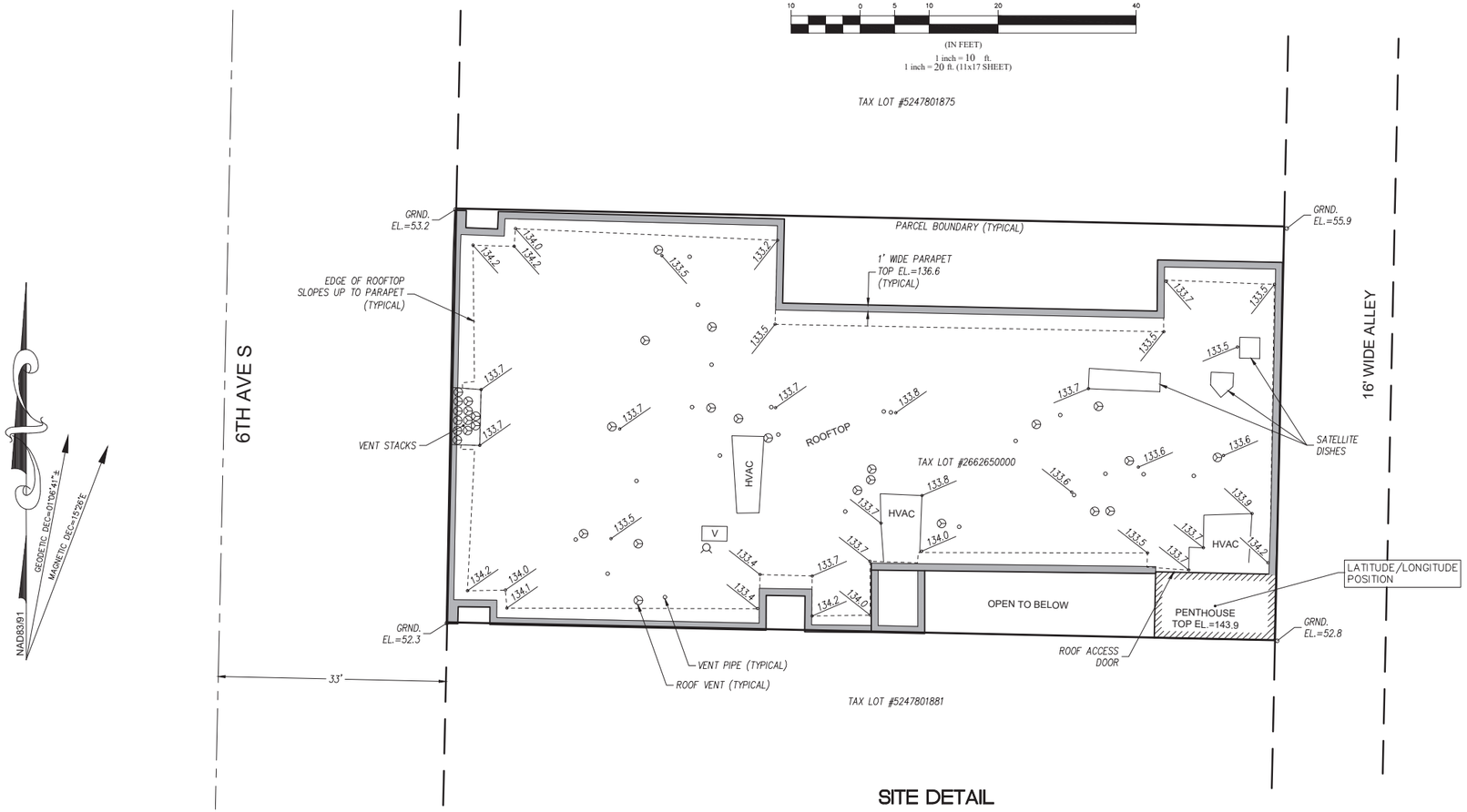

SITE DETAIL

LEGEND

- SUBJECT BOUNDARY LINE
- RIGHT–OF–WAY CENTERLINE
- RIGHT–OF–WAY LINE
- ADJACENT BOUNDARY LINE
- SECTIONAL BREAKDOWN LINE
- OP — OVERHEAD POWER LINE
- UP — BURIED POWER LINE
- G — BURIED GAS LINE
- OT — OVERHEAD TELEPHONE LINE
- UT — BURIED TELEPHONE LINE
- W — BURIED WATER LINE
- SS — BURIED SANITARY SEWER
- SD — BURIED STORM DRAIN
- DITCH LINE/FLOW LINE
- ROCK RETAINING WALL
- VEGETATION LINE
- CHAIN LINK FENCE
- WOOD FENCE
- X — BARBED WIRE/WIRE FENCE
- TRANSFORMER
- LIGHT STANDARD
- POWER VAULT
- UTILITY BOX
- UTILITY POLE
- GUY ANCHOR
- GAS VALVE
- GAS METER
- TELEPHONE VAULT
- TEL. MANHOLE
- TEL. PEDESTAL
- FIRE HYDRANT
- GATE VALVE
- WATER METER
- FIRE STAND PIPE
- IRRIGATION CONTROL
- CATCH BASIN, TYPE I
- CATCH BASIN, TYPE II
- SIGN
- BOLLARD
- MAIL BOX
- 234.21 SPOT ELEVATION

NOTE:
1) ALL ELEVATIONS SHOWN ARE ABOVE MEAN SEA LEVEL (AMSL) AND ARE REFERENCED TO THE NAVD88 DATUM.
2) ALL TOWER, TREE AND APPURTENANCE HEIGHTS ARE ABOVE GROUND LEVEL (AGL) AND ARE ACCURATE TO ± 0.5 FEET OR ± 1% OF TOTAL HEIGHT, WHICHEVER IS GREATER.

TREE LEGEND

DECIDUOUS TREE
AL12 ← TRUNK DIAMETER (IN)
TYPE

AL=ALDER
MP=MAPLE
DS=DECIDUOUS
MA=MADRONA
OK=OAK
CH=CHERRY

EVERGREEN TREE
DF18
195.2
HEIGHT AGL IF MEASURED

ST=STUMP

CE=CEDAR
DF=DOUGLAS FIR
HE=HEMLOCK
PI=PINE
EVG=EVERGREEN

NOTE:
TREE DRIP LINES ARE NOT TO SCALE. TREE SYMBOLS REFERENCE TRUNK LOCATION ONLY. TRUNK DIAMETERS WERE APPROXIMATED AT 3.5' TO 4' ABOVE GROUND LEVEL. TREES SHOWN ARE FOR REFERENCE ONLY AND OTHER TREES AND VEGETATION MAY EXIST.

SITE INFORMATION

TAX LOT NUMBER	2662650000
SITE ADDRESS	510 6TH AVE S SEATTLE, WA 98104
SITE CONTACT	.
PHONE NUMBER	.
ZONING	IDM–75–86 (CITY OF SEATTLE)
TOTAL LOT AREA	TO BE DETERMINED
PROJECT AREA	TO BE DETERMINED

SURVEY REFERENCE

CONDOMINIUM PLAT PER VOLUME 159, PAGE 20, RECORDS OF KING COUNTY.
RECORD OF SURVEY PER A.F. NO. 20140506900001, RECORDS OF KING COUNTY.

BOUNDARY DISCLAIMER

THIS PLAN DOES NOT REPRESENT A BOUNDARY SURVEY. SUBJECT AND ADJACENT PROPERTY LINES ARE DEPICTED USING FIELD–FOUND EVIDENCE AND RECORD INFORMATION.

CAUTION!

UNDERGROUND UTILITIES EXIST IN THE AREA AND UTILITY INFORMATION SHOWN MAY BE INCOMPLETE. STATE LAW REQUIRES THAT CONTRACTOR CONTACT THE ONE–CALL UTILITY LOCATE SERVICE AT LEAST 48 HOURS BEFORE STARTING ANY CONSTRUCTION.

1-800-424-5555

T-Mobile

Technology Associates

DUNCANSON
Company, Inc.
145 SW 155th Street, Suite 102
Seattle, Washington 98166
Phone 206.244.4141
Fax 206.244.4455

SITE

SE03949E
WELLER
KING/FUJISADA

510 6TH AVE S
SEATTLE, WA 98104
KING COUNTY

THIS DRAWING WAS CREATED FOR THE EXCLUSIVE USE OF THE CLIENT NAMED HEREON, AND IS NOT TO BE USED IN WHOLE OR IN PART WITHOUT WRITTEN AUTHORIZATION FROM SAID CLIENT.
©2021, DUNCANSON COMPANY, INC.

FLD. CREW:	PN/AH
FLD. BOOK:	581/52
DRAWN BY:	LAC
JOB #:	01808.1815
DATE:	12/03/21

REVISIONS

DATE	DESCRIPTION	BY

STEVEN J WALKER
STATE OF WASHINGTON
41038
REGISTERED PROFESSIONAL LAND SURVEYOR
12/03/21

SHEET TITLE
EXISTING SITE SURVEY
SEC 5, TWP 24 N, RNG 4 E, WM

SHEET NUMBER
SV1

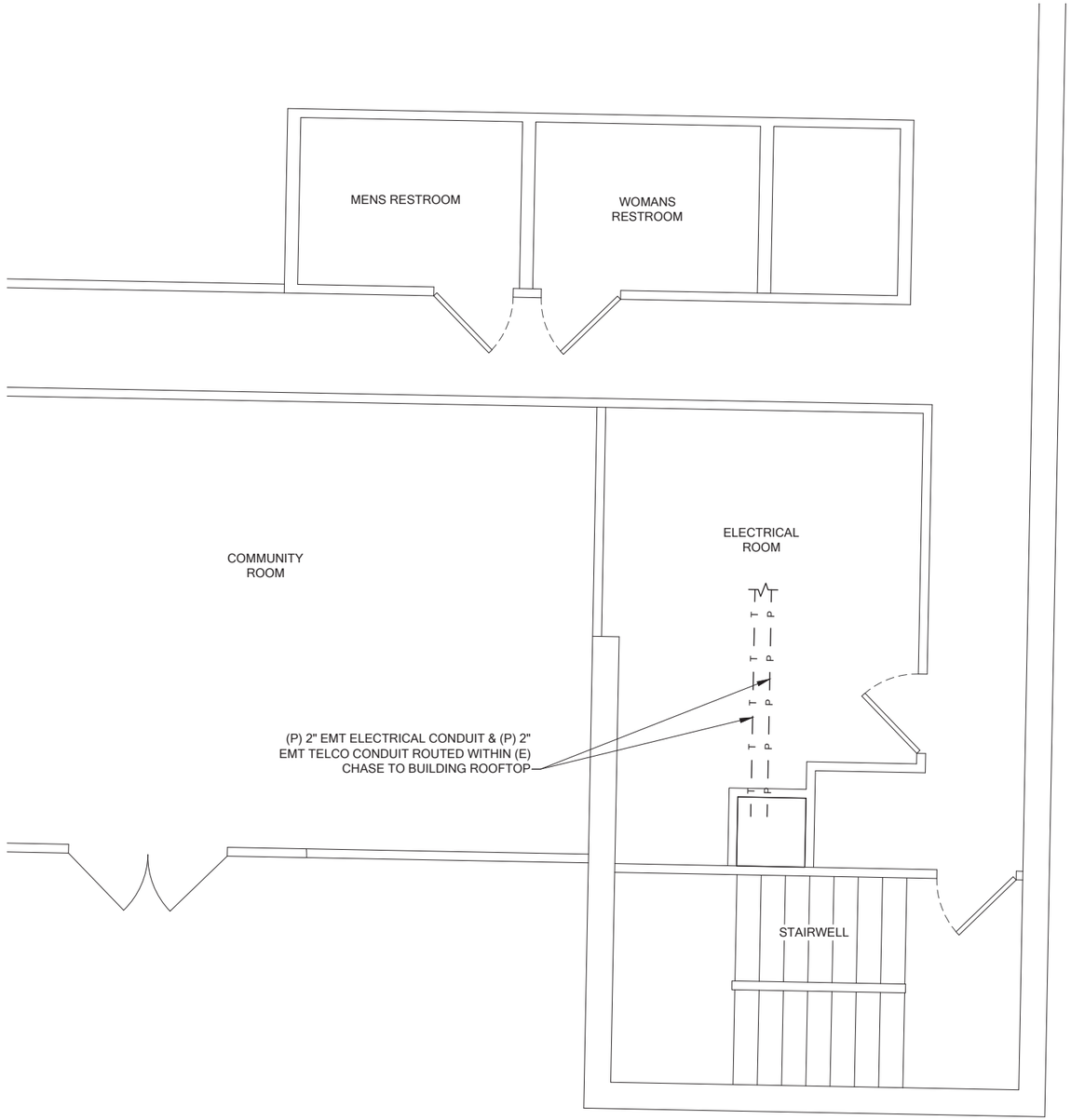

POWER & TELCO ROUTING "RETAIL UPPER 1ST FLOOR"

22x34 SCALE: 3/8" = 1'
11x17 SCALE: 3/16" = 1'

T-Mobile

PROJECT INFORMATION:

WELLER KING/FUJISADA CONDOS
SE03494E

510 6TH AVE S
SEATTLE, WA 98104

ISSUED FOR:

BUILDING PERMIT

REVISION HISTORY:

NO.	DATE:	DESCRIPTION:	CHK. BY:
19	5/31/2022	UPDATED STRUCTURAL SHEETS ADDED	BJT
18	5/29/2022	UPDATED STRUCTURAL SHEETS ADDED	BJT
17	5/25/2022	MINOR REV	BJT
16	5/24/2022	MINOR REV	BJT
15	5/18/2022	MINOR REV	BJT
14	5/17/2022	REVISED PER OWNER COMMENTS	BJT
13	5/9/2022	REVISED STRUCTURAL SHEETS ADDED	BJT
12	4/28/2022	MINOR REV	BJT
11	4/27/2022	MINOR REV	BJT
10	4/20/2022	REVISED PER REDLINES	BJT
9	4/8/2022	RELOCATED ANTENNAS, REVISED PER SITE WALK	BJT

PLANS PREPARED BY:

B. J. THOMAS, P.E.
7607 80TH AVE NE
MARYSVILLE, WA 98270
206-851-1106

DRAWN BY:	CHK. BY:
JL	BJ

LICENSURE:

B. J. THOMAS
STATE OF WASHINGTON
REGISTERED PROFESSIONAL ENGINEER
5/31/2022

JURISDICTIONAL APPROVAL:

DRAWING TITLE:

POWER & TELCO ROUTING

DRAWING NUMBER:

E-1

ELECTRICAL NOTES:

1. ALL ELECTRICAL WORK SHALL BE COMPLETED IN ACCORDANCE WITH THE LATEST EDITION OF THE NATIONAL ELECTRICAL CODE AND ANY LOCAL, CITY, OR COUNTY CODES THAT MAY APPLY.
2. GROUNDING SHALL COMPLY WITH ARTICLE 250 OF THE NATIONAL ELECTRICAL CODE.
3. CONTRACTOR SHALL BE RESPONSIBLE FOR PERMITTING, FILINGS, INSPECTIONS, AND TESTING AS REQUIRED BY THE PERMITTING AUTHORITY AND T-MOBILE.
4. UNDERGROUND CONDUIT SHALL BE RIGID POLYVINYL CHLORIDE CONDUIT, SCHEDULE 40, TYPE 1, CONFORMING TO UL ARTICLE 651; MANUFACTURED BY WESTERN PLASTICS, CARLON, OR EQUAL. ALL BENDS SHALL BE 30" MINIMUM RADIUS.
5. CONTRACTOR SHALL CONTACT ALL UTILITIES FOR LOCATION OF UNDERGROUND SERVICES. SERVICE LOCATIONS TO BE CONFIRMED PRIOR TO CONSTRUCTION.
6. ALL EQUIPMENT, WIRING, AND MATERIALS MUST HAVE A UL LABEL.
7. CONDUIT USED INDOORS SHALL BE EMT. CONDUIT USED OUTDOORS SHALL BE RMC. COUPLINGS SHALL BE RIGID STEEL AND COMPRESSION TYPE FOR EMT (SET SCREW FITTINGS ARE NOT PERMITTED). RMC TO BE USED FOR ALL CONDUIT STUB-UPS.
8. WIRES AND CABLES SHALL BE CONTINUOUS FROM TERMINATION TO TERMINATION WITH NO SPLICES ALLOWED.
9. ALL JUNCTION AND OUTLET BOXES SHALL BE LABELED WITH KROY TAPE OR EQUAL. CONTRACTOR TO DESIGNATE ALL CIRCUIT NUMBERS CONTAINED IN EACH BOX.
10. THE DISTRIBUTION PANEL SHALL HAVE A TYPED LEGEND IDENTIFYING THE LOADS OF ALL CIRCUIT BREAKERS.
11. CONTRACTOR SHALL INSTALL CONDUIT SEALING COMPOUND (BLACKBURN DX DUCT SEAL OR EQUAL) AFTER WIRING IS PULLED AND TERMINATED.

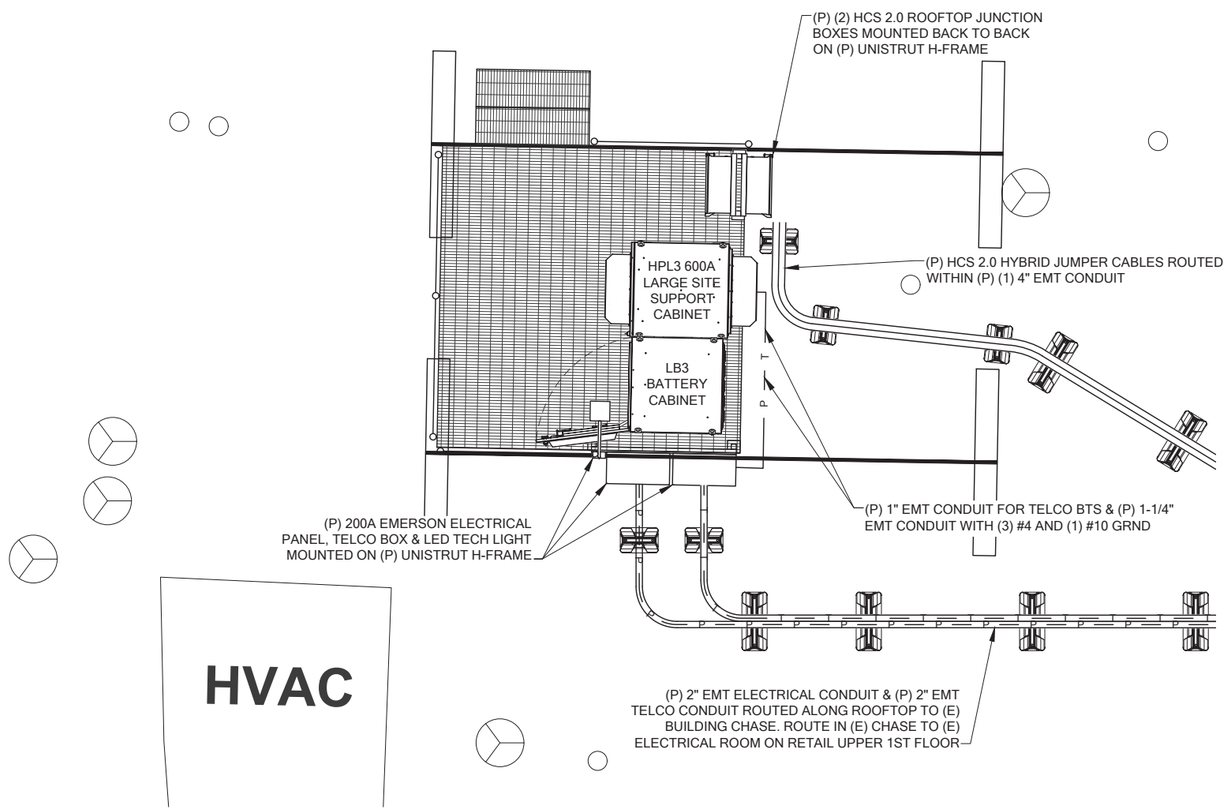

ELECTRICAL ROUTING "RETAIL UPPER 1ST FLOOR"
22x34 SCALE: 1/2" = 1'
11x17 SCALE: 1/4" = 1'

T-Mobile

PROJECT INFORMATION:

WELLER KING/FUJISADA CONDOS
SE03494E

510 6TH AVE S
SEATTLE, WA 98104

ISSUED FOR:

BUILDING PERMIT

REVISION HISTORY:

NO.	DATE:	DESCRIPTION:	CHK. BY:
19	5/31/2022	UPDATED STRUCTURAL SHEETS ADDED	BJT
18	5/29/2022	UPDATED STRUCTURAL SHEETS ADDED	BJT
17	5/25/2022	MINOR REV	BJT
16	5/24/2022	MINOR REV	BJT
15	5/18/2022	MINOR REV	BJT
14	5/17/2022	REVISED PER OWNER COMMENTS	BJT
13	5/9/2022	REVISED STRUCTURAL SHEETS ADDED	BJT
12	4/28/2022	MINOR REV	BJT
11	4/27/2022	MINOR REV	BJT
10	4/20/2022	REVISED PER REDLINES	BJT
9	4/8/2022	RELOCATED ANTENNAS, REVISED PER SITE WALK	BJT

PLANS PREPARED BY:

B. J. THOMAS, P.E.
7607 80TH AVE NE
MARYSVILLE, WA 98270
206-851-1106

DRAWN BY:	CHK. BY:
JL	BJ

LICENSURE:

B. J. THOMAS STATE OF WASHINGTON REGISTERED PROFESSIONAL ENGINEER
5/31/2022

JURISDICTIONAL APPROVAL:

DRAWING TITLE:

ELECTRICAL SITE PLAN

DRAWING NUMBER:

E-1.1

NEMA 3R - PANELBOARD FURNISHED BY T-MOBILE
WIRELESS, INSTALLED BY CONTRACTOR.

SURFACE MOUNTING
65,000 AIC

PANEL SCHEDULE

NO. A | LOCATION: ROOFTOP | SERVING: T-MOBILE | 120/208 VOLTS 1PHASE 3WIRE | 200 AMPS WITH 200 MAIN BREAKER

CKT NO.	LOAD DESCRIPTION	KVA	TRIP AMPS	TRIP AMPS	KVA	LOAD DESCRIPTION	CKT NO.
1	TVSS	-	30	20	.2	GFCI RECPT & LIGHT	2
3	TVSS	-	"				4
5	HPL3	24	200				6
7	HPL3	"	"				8
9	HPL3	"	"				10
11	HPL3	"	"				12
13							14
15							16
17							18
19							20
21							22
23							24

REMARKS:

CONNECTED LOAD: 24.2 KVA 116.3 AMPS

DEMAND LOAD: 24.2 KVA 116.3 AMPS

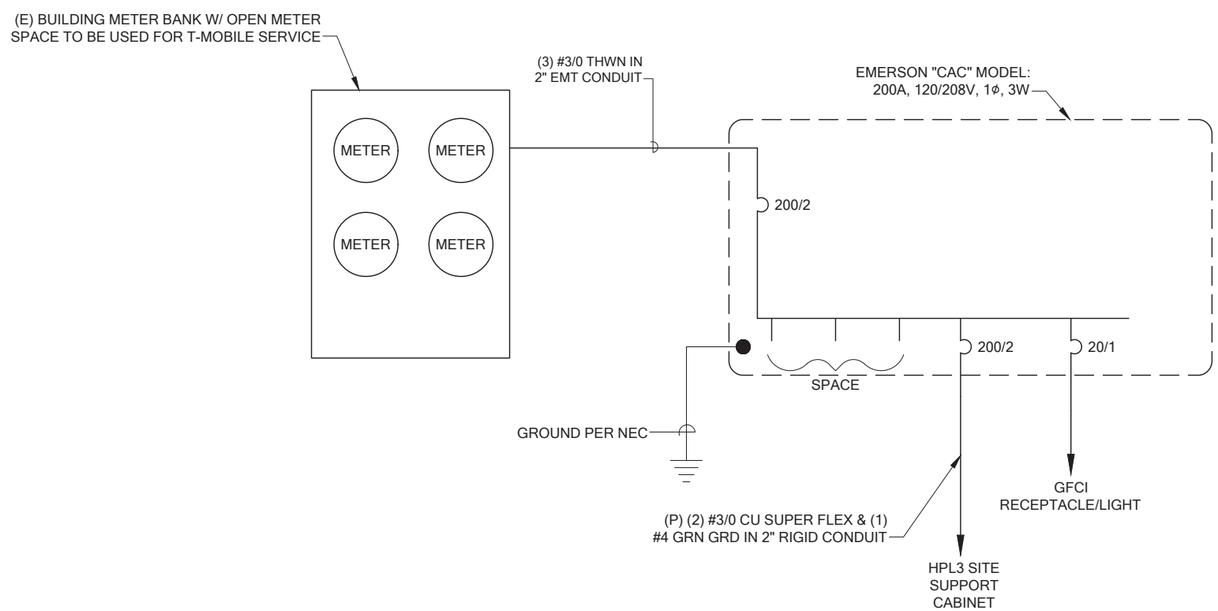

ELECTRICAL ONE LINE

T-Mobile

PROJECT INFORMATION:

WELLER KING/FUJISADA CONDOS
SE03494E

510 6TH AVE S
SEATTLE, WA 98104

ISSUED FOR:

BUILDING PERMIT

REVISION HISTORY:

NO.	DATE:	DESCRIPTION:	CHK. BY:
19	5/31/2022	UPDATED STRUCTURAL SHEETS ADDED	BJT
18	5/29/2022	UPDATED STRUCTURAL SHEETS ADDED	BJT
17	5/25/2022	MINOR REV	BJT
16	5/24/2022	MINOR REV	BJT
15	5/18/2022	MINOR REV	BJT
14	5/17/2022	REVISED PER OWNER COMMENTS	BJT
13	5/9/2022	REVISED STRUCTURAL SHEETS ADDED	BJT
12	4/28/2022	MINOR REV	BJT
11	4/27/2022	MINOR REV	BJT
10	4/20/2022	REVISED PER REDLINES	BJT
9	4/8/2022	RELOCATED ANTENNAS, REVISED PER SITE WALK	BJT

PLANS PREPARED BY:

B. J. THOMAS, P.E.
7607 80TH AVE NE
MARYSVILLE, WA 98270
206-851-1106

DRAWN BY: JL **CHK. BY:** BJ

LICENSURE:

B. J. THOMAS
STATE OF WASHINGTON
REGISTERED PROFESSIONAL ENGINEER
5/31/2022

JURISDICTIONAL APPROVAL:

DRAWING TITLE:

ELECTRICAL DETAILS

DRAWING NUMBER:

E-1.2

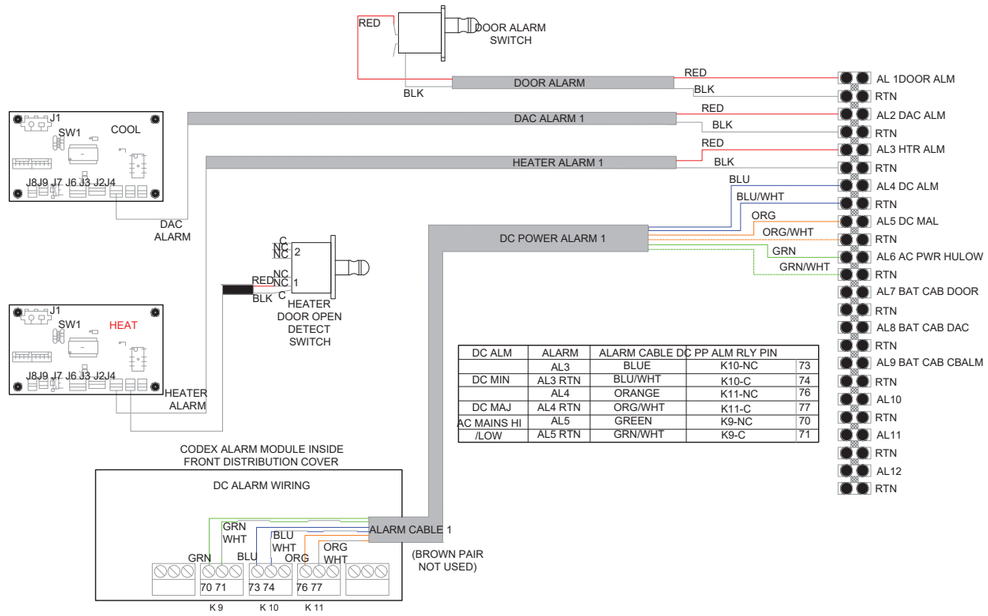

DC ALM	ALARM	ALARM CABLE DC PP ALM RLY PIN		
	AL3	BLUE	K10-NC	73
DC MIN	AL3 RTN	BLU/WHT	K10-C	74
	AL4	ORANGE	K11-NC	76
DC MAJ	AL4 RTN	ORG/WHT	K11-C	77
AC MAINS HI	AL5	GREEN	K9-NC	70
/LOW	AL5 RTN	GRN/WHT	K9-C	71

ALARM WIRING DIAGRAM

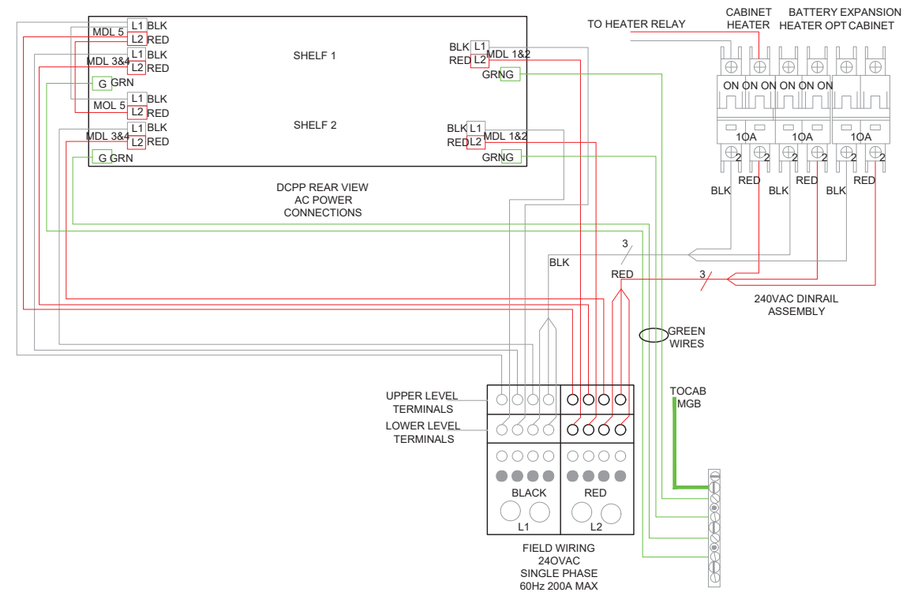

AC POWER WIRING DIAGRAM

NOTE:
DIAGRAMS PROVIDED ARE PER MANUFACTURER INSTALLATION GUIDE

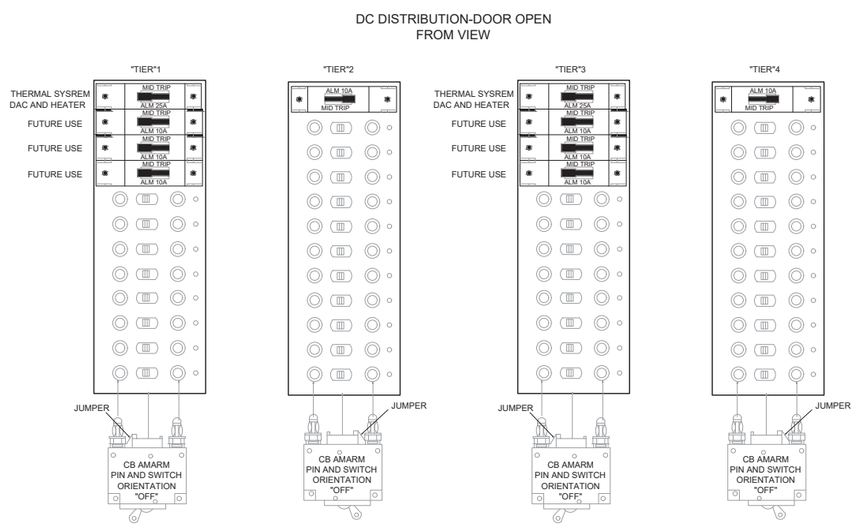

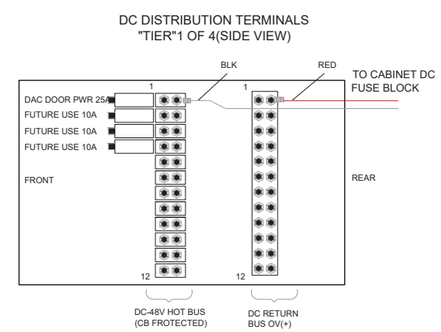

DC POWER WIRING DIAGRAM

T-Mobile

PROJECT INFORMATION:

WELLER KING/FUJISADA CONDOS
SE03494E

510 6TH AVE S
SEATTLE, WA 98104

ISSUED FOR:

BUILDING PERMIT

REVISION HISTORY:

NO.	DATE:	DESCRIPTION:	CHK. BY:
19	5/31/2022	UPDATED STRUCTURAL SHEETS ADDED	BJT
18	5/29/2022	UPDATED STRUCTURAL SHEETS ADDED	BJT
17	5/25/2022	MINOR REV	BJT
16	5/24/2022	MINOR REV	BJT
15	5/18/2022	MINOR REV	BJT
14	5/17/2022	REVISED PER OWNER COMMENTS	BJT
13	5/9/2022	REVISED STRUCTURAL SHEETS ADDED	BJT
12	4/28/2022	MINOR REV	BJT
11	4/27/2022	MINOR REV	BJT
10	4/20/2022	REVISED PER REDLINES	BJT
9	4/8/2022	RELOCATED ANTENNAS, REVISED PER SITE WALK	BJT

PLANS PREPARED BY:

B. J. THOMAS, P.E.
7607 80TH AVE NE
MARYSVILLE, WA 98270
206-851-1106

DRAWN BY:	CHK. BY:
JL	BJ

LICENSURE:

B. J. THOMAS
STATE OF WASHINGTON
REGISTERED PROFESSIONAL ENGINEER
5/31/2022

JURISDICTIONAL APPROVAL:

DRAWING TITLE:

ELECTRICAL DIAGRAMS

DRAWING NUMBER:

E-1.3

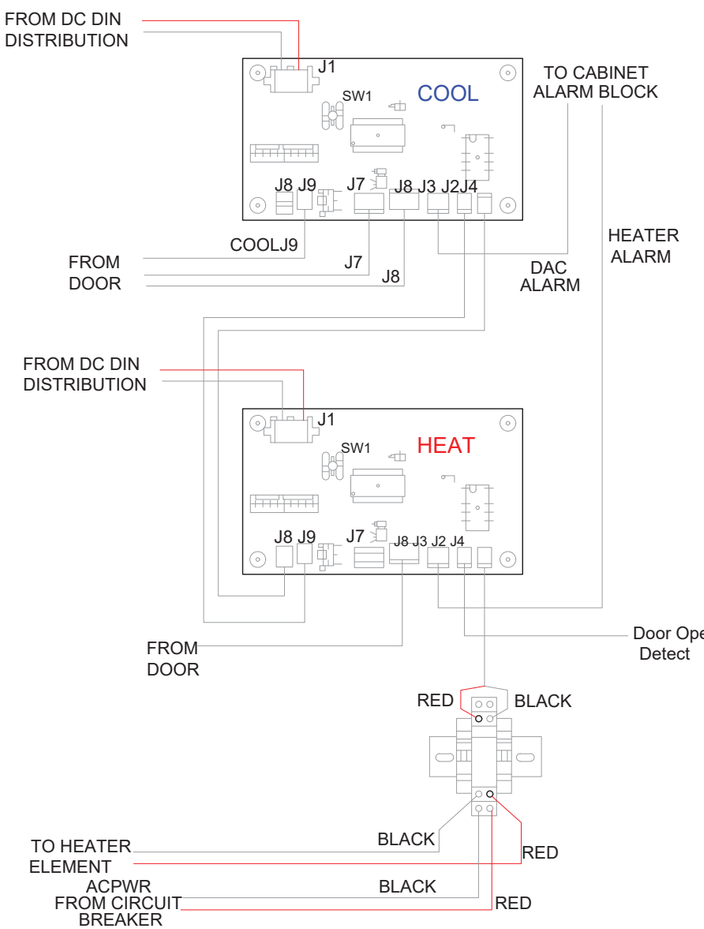

DAC (COOLING) CONTROLLER

COHN	FUNCTION
JI	PIWR IN
J8	DELTA T JUMPER
J9	OUTSIDE TEMPETATURE
J7	DACFAN (LOWER)
J6	DACFAN (UPPER)
J3	ALARM
J2	COOLING INHBIT
J4	HEAT REQUEST

HEATER CONTROLLER

COHN	FUNCTION
JI	PIWR IN
J8	HEAT REQUEST
J9	COOLING INHBIT
J7	UNUSED
J6	HEATER FAN
J3	ALARM
J2	DOOR SW INPUT
J4	HEATER REALY CONTROL

DC HEATING AND COOLING WIRING DIAGRAM

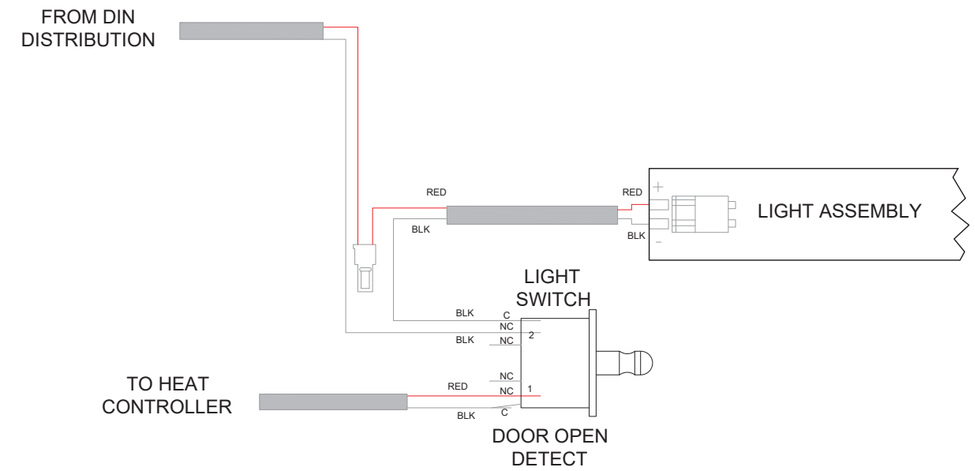

DC CABINET DOOR LIGHT POWER WIRING DIAGRAM

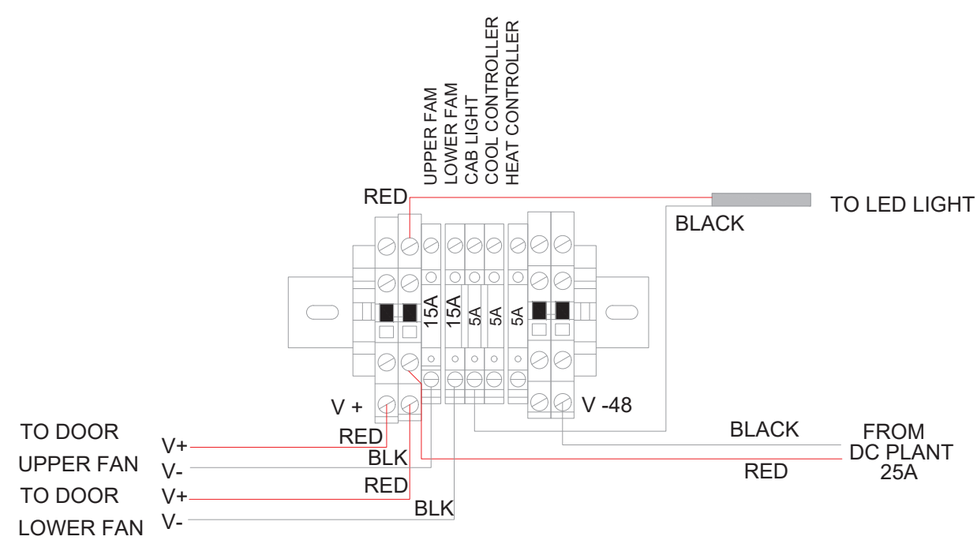

DC DISTRIBUTION (BLACK WIRE JUMPERS TO FUSE POSOTIONS REMOVED FOR CLARITY)

DC FUSE BLOCK WIRING DIAGRAM

T-Mobile

PROJECT INFORMATION:

WELLER KING/FUJISADA CONDOS
SE03494E

510 6TH AVE S
SEATTLE, WA 98104

ISSUED FOR:

BUILDING PERMIT

REVISION HISTORY:

NO.	DATE:	DESCRIPTION:	CHK. BY:
19	5/31/2022	UPDATED STRUCTURAL SHEETS ADDED	BJT
18	5/29/2022	UPDATED STRUCTURAL SHEETS ADDED	BJT
17	5/25/2022	MINOR REV	BJT
16	5/24/2022	MINOR REV	BJT
15	5/18/2022	MINOR REV	BJT
14	5/17/2022	REVISED PER OWNER COMMENTS	BJT
13	5/9/2022	REVISED STRUCTURAL SHEETS ADDED	BJT
12	4/28/2022	MINOR REV	BJT
11	4/27/2022	MINOR REV	BJT
10	4/20/2022	REVISED PER REDLINES	BJT
9	4/8/2022	RELOCATED ANTENNAS, REVISED PER SITE WALK	BJT

PLANS PREPARED BY:

B. J. THOMAS, P.E.
7607 80TH AVE NE
MARYSVILLE, WA 98270
206-851-1106

DRAWN BY:	CHK. BY:
JL	BJ

LICENSURE:

B J Thomas
5/31/2022

JURISDICTIONAL APPROVAL:

DRAWING TITLE:

ELECTRICAL DIAGRAMS

DRAWING NUMBER:

E-1.4

SYMBOL LEGEND:

MGB	MASTER GROUND BAR 1/4"x4"x24" COPPER
AGB	ACCESSORY GROUND BAR 1/4"x4"x12" OR 1/4"x4"x20" COPPER
———	EXPOSED WIRING
- - - - -	UNDERGROUND WIRING
■	CADWELD
•	MECHANICAL CONNECTION
●	5/8"x8' COPPER CLAD STEEL GROUND ROD
⊙	INSPECTION PORT
- -■- -	EXOTHERMIC (CADWELD) BELOW GROUND
⏚	GROUND

GROUNDING NOTES:

1. GROUNDING SHALL COMPLY WITH LATEST EDITION OF THE NATIONAL ELECTRICAL CODE.
2. MINIMUM BENDING RADIUS FOR GROUND CONDUCTOR IS 8".
3. NO SPLICES PERMITTED IN GROUND CONDUCTORS.
4. ALL GROUNDING CONNECTORS TO BE CLEAN AND FREE OF PAINT AT THEIR MATING SURFACES AND INSTALLED PER MANUFACTURER'S RECOMMENDATIONS. USE PENETROX OR EQUIVALENT ANTIOXIDANT GREASE.
5. ALL GROUND BAR CONNECTIONS ARE TO BE 2 HOLE LUG COMPRESSION TYPE. STACKED CONNECTIONS ARE NOT ACCEPTABLE. BACK TO BACK CONNECTIONS ON OPPOSITE SIDES OF THE GROUND BAR WILL BE PERMITTED.
6. ENSURE ALL MECHANICAL CONNECTORS ARE TORQUED TO THE MANUFACTURER'S SPECIFIED VALUES.
7. MAXIMUM RESISTANCE OF THE COMPLETED GROUND SYSTEM SHALL NOT EXCEED A RESISTANCE OF 5 OHMS TO EARTH.
8. GROUND WIRES SHALL NOT BE INSTALLED THROUGH HOLES IN ANY METAL OBJECTS OR SUPPORTS; TO PRECLUDE ESTABLISHING A "CHOKE" POINT.
9. GROUND BARS SHALL NOT BE FIELD MODIFIED.
10. A CERTIFIED CONTRACTOR WILL MAKE ALL MEASUREMENTS REQUIRED TO TEST THE GROUNDING SYSTEM USING A MEGGER OR EQUIVALENT. THE ACCEPTABLE RESISTANCE MEASURED FOR THE GROUNDING SYSTEM WILL NOT EXCEED 5 OHMS RESISTANCE. THREE DISTANCES SHALL BE USED: 1 AT 100 FEET, 1 AT 70 FEET, AND 1 AT 35 FEET. THESE DISTANCES ARE SUBJECT TO A SITE BY SITE BASIS. T-MOBILE-WTS SHALL BE GIVEN 24 HOURS NOTICE. ALL COSTS ASSOCIATED WITH GROUND TESTING WILL BE AT THE EXPENSE OF THE CONTRACTOR.

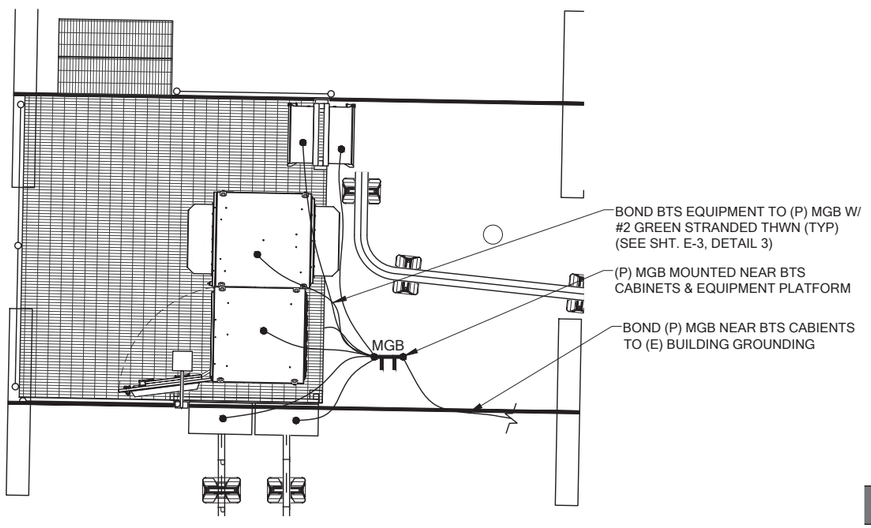

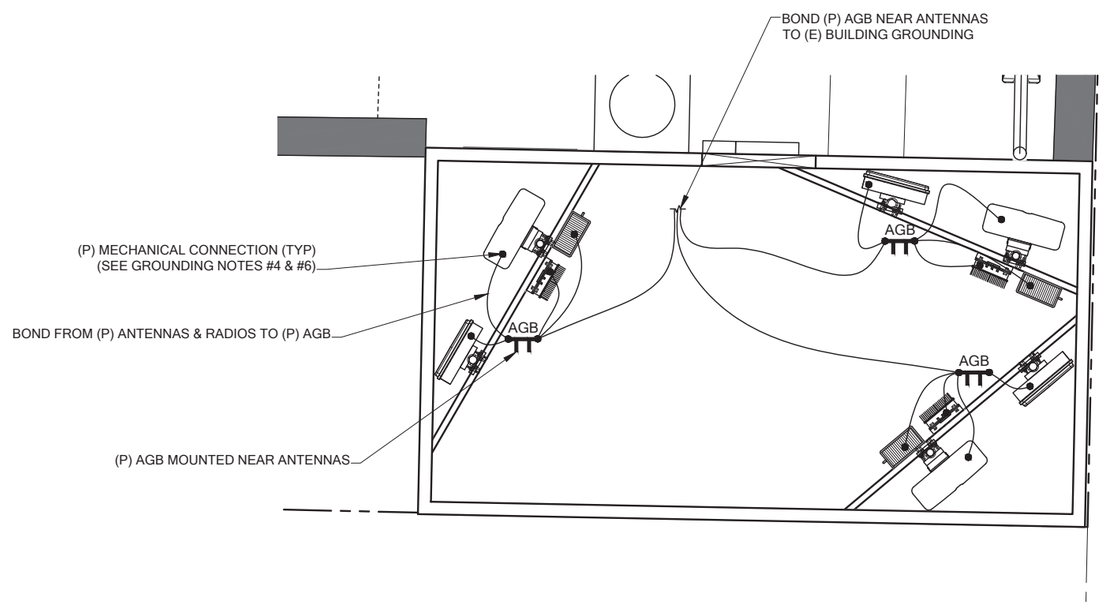

1 / E-2 **ELECTRICAL GROUNDING PLAN**

22x34 SCALE: 1/2" = 1'
11x17 SCALE: 1/4" = 1'

T-Mobile

PROJECT INFORMATION:

WELLER KING/FUJISADA CONDOS
SE03494E

510 6TH AVE S
SEATTLE, WA 98104

ISSUED FOR:

BUILDING PERMIT

REVISION HISTORY:

NO.	DATE:	DESCRIPTION:	CHK. BY:
19	5/31/2022	UPDATED STRUCTURAL SHEETS ADDED	BJT
18	5/29/2022	UPDATED STRUCTURAL SHEETS ADDED	BJT
17	5/25/2022	MINOR REV	BJT
16	5/24/2022	MINOR REV	BJT
15	5/18/2022	MINOR REV	BJT
14	5/17/2022	REVISED PER OWNER COMMENTS	BJT
13	5/9/2022	REVISED STRUCTURAL SHEETS ADDED	BJT
12	4/28/2022	MINOR REV	BJT
11	4/27/2022	MINOR REV	BJT
10	4/20/2022	REVISED PER REDLINES	BJT
9	4/8/2022	RELOCATED ANTENNAS, REVISED PER SITE WALK	BJT

PLANS PREPARED BY:

B. J. THOMAS, P.E.
7607 80TH AVE NE
MARYSVILLE, WA 98270
206-851-1106

DRAWN BY:	CHK. BY:
JL	BJ

LICENSURE:

B J Thomas
5/31/2022
B. J. THOMAS
STATE OF WASHINGTON
REGISTERED PROFESSIONAL ENGINEER

JURISDICTIONAL APPROVAL:

DRAWING TITLE:

ELECTRICAL GROUNDING PLAN

DRAWING NUMBER:

E-2

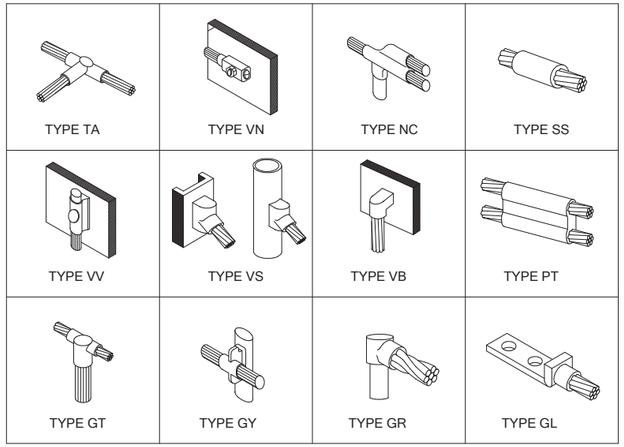

1 / E-3 **TYPICAL CADWELD CONNECTIONS**
N.T.S.

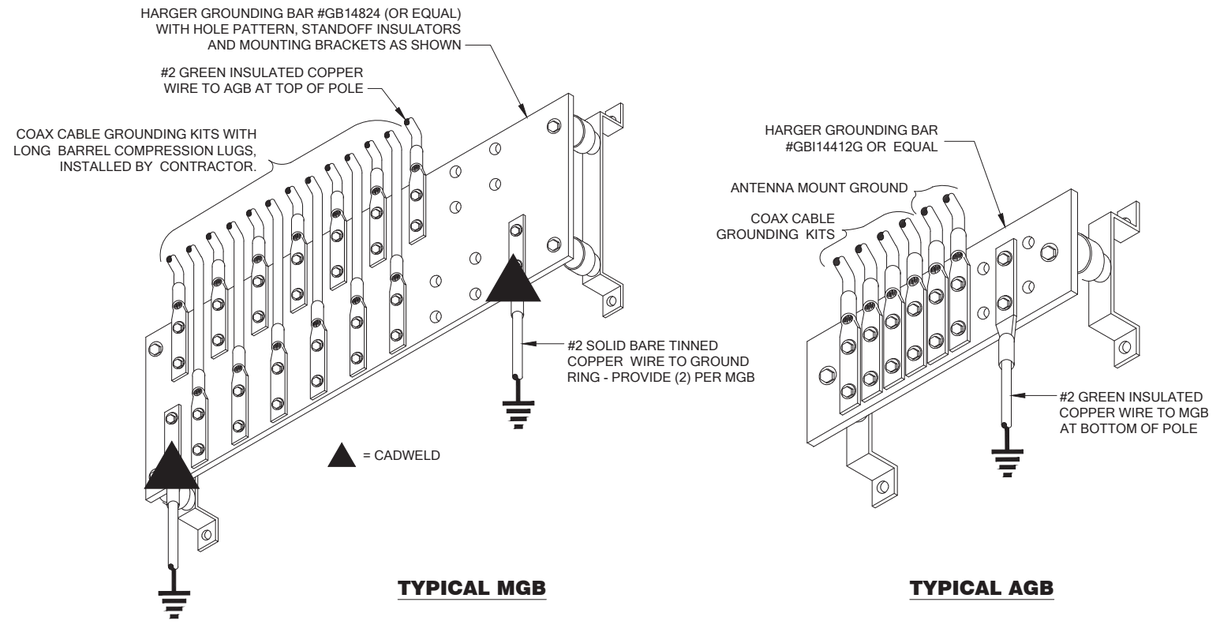

2 / E-3 **GROUND BAR DETAILS**
N.T.S.

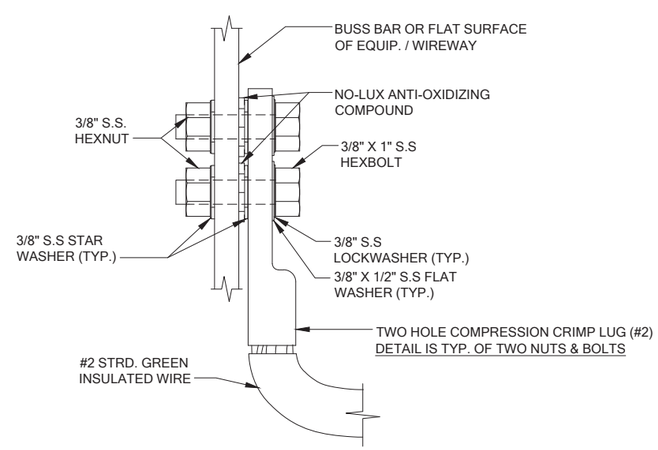

NOTES
1. TYP. ALL GROUND WIRES FOR ELECT. AND OTHER EQUIPMENT.

2. THE ENTIRE LUG AND AREA TO BE SPRAYED WITH CLEAR LAQUER OR COLD GALVINIZING SPRAY

3. GROUND LEADS TO BE CADWELDED TO GROUND RING.

3 / E-3 **TYPICAL CABINET GROUNDING DETAIL**
N.T.S.

T-Mobile

PROJECT INFORMATION:

WELLER KING/FUJISADA CONDOS
SE03494E

510 6TH AVE S
SEATTLE, WA 98104

ISSUED FOR:

BUILDING PERMIT

REVISION HISTORY:

NO.	DATE:	DESCRIPTION:	CHK. BY:
19	5/31/2022	UPDATED STRUCTURAL SHEETS ADDED	BJT
18	5/29/2022	UPDATED STRUCTURAL SHEETS ADDED	BJT
17	5/25/2022	MINOR REV	BJT
16	5/24/2022	MINOR REV	BJT
15	5/18/2022	MINOR REV	BJT
14	5/17/2022	REVISED PER OWNER COMMENTS	BJT
13	5/9/2022	REVISED STRUCTURAL SHEETS ADDED	BJT
12	4/28/2022	MINOR REV	BJT
11	4/27/2022	MINOR REV	BJT
10	4/20/2022	REVISED PER REDLINES	BJT
9	4/8/2022	RELOCATED ANTENNAS, REVISED PER SITE WALK	BJT

PLANS PREPARED BY:

B. J. THOMAS, P.E.
7607 80TH AVE NE
MARYSVILLE, WA 98270
206-851-1106

DRAWN BY: JL
CHK. BY: BJ

LICENSURE:

B. J. THOMAS
STATE OF WASHINGTON
REGISTERED PROFESSIONAL ENGINEER
5/31/2022

JURISDICTIONAL APPROVAL:

DRAWING TITLE:

ELECTRICAL GROUNDING DETAILS

DRAWING NUMBER:

E-3

STRUCTURAL NOTES

(THESE NOTES ARE TYPICAL UNLESS NOTED OR DETAILED OTHERWISE ON DRAWINGS)

CODE

ALL MATERIALS, WORKMANSHIP, DESIGN, AND CONSTRUCTION SHALL CONFORM TO THE DRAWINGS, SPECIFICATIONS, AND THE INTERNATIONAL BUILDING CODE (IBC), 2018 EDITION. SPECIFICATIONS AND STANDARDS WHERE REFERENCED ON THE DRAWINGS ARE TO BE THE LATEST EDITION.

DESIGN LOADS

DEAD LOADS:

ROOF	15 PSF
FLOOR	17 PSF
EXTERIOR WALL	12 PSF

LIVE LOADS:

ROOF (SNOW LOAD)	25 PSF
RESIDENTIAL	40 PSF

(LIVE LOADS ARE REDUCED WHERE PERMISSIBLE PER IBC SECTION 1607.11).

EARTHQUAKE LOADS:

EQUIVALENT LATERAL FORCE PROCEDURE PER ASCE 7-16 SECTION 12.8.

SITE CLASS (ASSUMED)	D
SHORT PERIOD SPECTRAL RESPONSE ACCEL (S_S)	1.413
ONE SECOND SPECTRAL RESPONSE ACCEL (S_1)	0.493
SHORT PERIOD DESIGN SPECTRAL RESPONSE ACCEL (S_{DS})	0.942
ONE SECOND DESIGN SPECTRAL RESPONSE ACCEL (S_{D1})	0.594
RISK CATEGORY	II
SEISMIC IMPORTANCE FACTOR (I_E)	1.0
SEISMIC DESIGN CATEGORY	D
BASIC SEISMIC FORCE-RESISTING-SYSTEM	WOOD SHEAR WALLS
RESPONSE MODIFICATION FACTOR, (R)	6.5
REDUNDANCY FACTOR (p)	1.0
SEISMIC RESPONSE COEFFICIENT (C_S)	0.145

W = TOTAL SEISMIC DEAD LOAD AS DEFINED PER ASCE 7-16 SECTION 12.7.2.

BASE SHEAR (V), $V = C_S W = \frac{S_{DS}}{R/I} W$

WIND LOADS:

BASIC WIND SPEED (3 SECOND GUST)	97 MPH
EXPOSURE	B
K_{ZT}	1.0

SEE PLANS FOR ADDITIONAL DESIGN LOADS.

DESIGN LOADS

EQUIPMENT PLATFORM DEAD LOAD: 5,000 LBS

SCREENWALL DEAD LOAD: 5,800 LBS (INCLUDE APPURTENANCES)

ROOFTOP SCREENWALL:

WIND LOAD: 97 MPH EXPOSURE B

F =	qz x (GCr) x Af = 37.3 PSF = 22.4 PSF (ASD)
qz =	19.62 PSF (Kz = 0.96, Kzt = 1.00, Kd = 0.85)
GCr =	1.9
RISK CATEGORY	II

SEISMIC LOAD: SEISMIC DESIGN CATEGORY D, SOIL TYPE Sd

Fp =	$\frac{0.4 ap Sds Ip}{Rp}$ [1+2z/h] Wp = 0.337 Wp (ASD)
ap =	1.0 (SCREENWALL)
Rp =	2.5 (SCREENWALL)
Sds =	0.942 (Ss = 1.413 & Fa = 1.0 BASED ON LAT/LONG)
Ip =	1.5 (COMM EQUIPMENT)
z/h =	1.0

STATEMENT OF SPECIAL INSPECTIONS

SPECIAL INSPECTIONS ARE REQUIRED AS INDICATED IN THE FOLLOWING TABLE. THE CONTRACTOR SHALL SUBMIT A WRITTEN STATEMENT OF RESPONSIBILITY TO THE BUILDING OFFICIAL AND OWNER PRIOR TO COMMENCEMENT OF WORK IN ACCORDANCE WITH SECTION 1704.4 OF THE IBC.

STEEL CONSTRUCTION - SPECIAL INSPECTION IS REQUIRED IN CONFORMANCE WITH IBC SECTION 1705.2.

STRUCTURAL OBSERVATION OF THE STRUCTURAL SYSTEM BY THE ENGINEER IS NOT REQUIRED.

FREQUENCY AND DISTRIBUTION OF REPORTS - INSPECTION REPORTS SHALL BE PROVIDED FOR EACH DAY ON SITE BY SPECIAL INSPECTOR. STRUCTURAL OBSERVATION REPORTS SHALL BE PROVIDED AFTER EACH OBSERVATION. REPORTS SHALL BE DISTRIBUTED TO THE CONTRACTOR, ARCHITECT, ENGINEER AND BUILDING OFFICIAL.

SPECIAL INSPECTION

OPERATION	CONT	PERIODIC	REMARKS
STRUCTURAL STEEL & FRP			
FABRICATION & ERECTION		X	
HIGH STRENGTH BOLTING		X	
SHOP & FIELD WELDING			
FILLET WELDS > 5/16"	X		

NOTE:
ALL ITEMS MARKED WITH AN "X" SHALL BE INSPECTED IN ACCORDANCE WITH IBC CHAPTER 17. SPECIAL INSPECTION SHALL BE PERFORMED BY A QUALIFIED TESTING AGENCY DESIGNATED BY THE OWNER. THE ARCHITECT, STRUCTURAL ENGINEER, AND BUILDING OFFICIAL SHALL BE FURNISHED WITH COPIES OF ALL RESULTS. ANY INSPECTION FAILING TO MEET THE PROJECT SPECIFICATIONS SHALL BE IMMEDIATELY BROUGHT TO THE ATTENTION OF THE DESIGN TEAM.

SHOP DRAWINGS

SHOP DRAWINGS FOR THE FOLLOWING ITEMS SHALL BE SUBMITTED TO THE ARCHITECT AND STRUCTURAL ENGINEER FOR REVIEW PRIOR TO FABRICATION:

1. STRUCTURAL STEEL
2. STEEL GRATING
3. FRP SCREENWALLS

SHOP DRAWINGS SHALL BE REVIEWED, REVISED AS REQUIRED FOR FIELD CONDITIONS, AND DATE STAMPED BY THE CONTRACTOR PRIOR TO REVIEW BY THE ENGINEER. CONTRACTOR SHALL PROVIDE (3) SETS OF SHOP DRAWINGS FOR ENGINEER'S REVIEW. ALLOW TWO WEEKS FOR SHOP DRAWING APPROVAL BY ENGINEER.

ENGINEER'S SHOP DRAWING REVIEW IS FOR GENERAL CONFORMANCE WITH THE DESIGN CONCEPT AND CONTRACT DOCUMENTS. MARKINGS OR COMMENTS SHALL NOT BE CONSTRUED AS RELIEVING THE CONTRACTOR FROM COMPLIANCE WITH THE PROJECT PLANS AND SPECIFICATIONS. THE CONTRACTOR REMAINS RESPONSIBLE FOR DETAILS AND ACCURACY, FOR CONFORMING AND CORRELATING ALL QUANTITIES AND DIMENSIONS, FOR SELECTING FABRICATION PROCESSES, FOR TECHNIQUES OF ASSEMBLY, AND FOR PERFORMING THE WORK IN A SAFE MANNER.

ENGINEER'S SHOP DRAWING REVIEW OF STRUCTURAL COMPONENTS DESIGNED BY OTHERS IS FOR LOADS IMPOSED ON THE BASIC STRUCTURE. THE COMPONENT DESIGNER IS RESPONSIBLE FOR CODE CONFORMANCE AND ALL CONNECTIONS TO THE BASIC STRUCTURE. SHOP DRAWINGS SHALL INDICATE MAGNITUDE AND DIRECTION OF THE LOADS IMPOSED ON THE BASIC STRUCTURE AND SHALL BE STAMPED & SIGNED BY A PROFESSIONAL ENGINEER REGISTERED IN THE SAME STATE AS THE PROJECT.

FABRICATION SHALL BEGIN ONLY AFTER SHOP DRAWINGS BEARING THE STAMP AND SIGNATURE OF THE PROJECT ARCHITECT, ENGINEER OF RECORD, AND CONTRACTOR HAVE BEEN RECEIVED.

STRUCTURAL STEEL

STRUCTURAL STEEL DESIGN, FABRICATION AND ERECTION SHALL BE IN ACCORDANCE WITH THE AISC "SPECIFICATION FOR THE DESIGN, FABRICATION, AND ERECTION OF STRUCTURAL STEEL FOR BUILDINGS", LATEST EDITION.

WIDE FLANGE SHAPES SHALL CONFORM TO ASTM A992, Fy = 50 KSI.

PLATES, ANGLES, CHANNELS, AND RODS SHALL CONFORM TO ASTM A36, Fy = 36 KSI.

STRUCTURAL TUBING SHALL CONFORM TO ASTM A500 GRADE B, Fy = 46 KSI.

STEEL PIPE SHALL CONFORM TO ASTM A53 GRADE B, Fy = 35 KSI.

BOLTS CONNECTING STEEL MEMBERS SHALL CONFORM TO ASTM A325-N. BOLTS SHALL BE 3/4"Ø MINIMUM, UNO ANCHOR BOLTS SHALL CONFORM TO ASTM A307.

CONTRACTOR SHALL PROVIDE CONNECTION ADJUSTMENT TOLERANCES TO SATISFY THE REQUIREMENTS OF AISC MANUAL OF STEEL CONSTRUCTION.

UNLESS SPECIFIED AS STAINLESS STEEL, ALL STEEL MEMBERS, SHAPES, BOLTS, AND ACCESSORIES EXPOSED TO WEATHER SHALL BE HOT DIP GALVANIZED.

WELDING

WELDING SHALL CONFORM TO AWS "STRUCTURAL WELDING CODE", LATEST EDITION. ALL WELDING SHALL BE DONE WITH 70 KSI LOW HYDROGEN ELECTRODES. WHERE NOT CALLED OUT, MINIMUM FILLET WELD SIZE SHALL BE PER TABLE 5.8 IN AWS D1.1, LATEST EDITION.

WELDING OF REINFORCING BARS SHALL NOT BE PERMITTED UNLESS SPECIFICALLY CALLED OUT ON DRAWINGS OR APPROVED BY STRUCTURAL ENGINEER. WELDING OF GRADE 60 REINFORCING BARS SHALL BE PERFORMED USING LOW HYDROGEN ELECTRODES. WELDING OF GRADE 40 REINFORCING BARS SHALL BE PERFORMED USING E70XX ELECTRODES. SEE REINFORCING NOTES FOR MATERIAL REQUIREMENTS OF WELDED BARS. WELDING WITHIN 4" OF COLD BENDS IN REINFORCING BARS IS NOT PERMITTED.

ALL WELDING SHALL BE DONE BY WASHINGTON ASSOCIATION OF BUILDING OFFICIALS (WABO) CERTIFIED WELDERS.

LUMBER

ALL GRADES SPECIFIED ARE MINIMUM GRADES REQUIRED. ALL LUMBER SHALL BE IN ACCORDANCE WITH WWPA GRADING RULES, KILN-DRIED TO MC 19 AND OF THE FOLLOWING MINIMUM STANDARDS:

SIZE CLASSIFICATION	SPECIES	GRADE	Fb (PSI)	Fc (PSI)
SLEEPERS	DOUG-FIR	#2	875	-

REFER TO PLAN NOTES, SCHEDULES, AND DETAILS FOR MORE SPECIFIC LUMBER SIZE AND GRADE REQUIREMENTS.

UNLESS NOTED OTHERWISE IN THE PLANS, ALL WOOD AND WOOD-BASED MEMBERS EXPOSED TO WEATHER OR IN CONTACT WITH CONCRETE, MASONRY, OR WITHIN 8" OF SOIL SHALL BE PRESERVATIVE-TREATED BY VACUUM-PRESSURE IMPREGNATION IN ACCORDANCE WITH AWPA STANDARD U1.

NAILS, BOLTS, AND METAL CONNECTORS FOR WOOD

ALL NAILS SHALL CONFORM TO THE STANDARDS SET FORTH BY THE NATIONAL DESIGN STANDARDS (NDS) FOR WOOD CONSTRUCTION, LATEST EDITION. NAILING NOT SPECIFIED SHALL BE PER IBC TABLE 2304.10.1 NAILING SCHEDULE. ALL NAILS CALLED OUT ON PLANS SHALL BE COMMON NAILS UNLESS NOTED OTHERWISE AND SHALL MEET OR EXCEED THE FOLLOWING MINIMUM GUIDELINES:

NAIL	SHANK Ø	MIN LENGTH
8d COMMON	0.131Ø	2 1/2" SHANK
10d COMMON	0.148Ø	3" SHANK
12d COMMON	0.148Ø	3 1/4" SHANK
16d COMMON	0.162Ø	3 1/2" SHANK

10d BOX NAILS MAY BE SUBSTITUTED FOR 8d COMMON NAILS WITH NO CHANGE IN NAIL SPACING. FRAMING MEMBERS MAY BE NAILED WITH 16d SINKERS (0.148"Ø x 3 1/4"), BUT ONLY 16d COMMON NAILS SHALL BE USED WHERE 16d NAILS ARE INDICATED IN THIS DRAWING SET. ENGINEER MAY APPROVE OTHER NAILS IF NAIL LABELS ARE SUBMITTED TO ENGINEER PRIOR TO START OF CONSTRUCTION.

ALL BOLTS IN WOOD MEMBERS SHALL CONFORM TO ASTM A307. PROVIDE WASHERS UNDER THE HEADS AND NUTS OF ALL BOLTS AND LAG SCREWS BEARING ON WOOD. LEAD HOLES FOR LAG BOLTS SHALL BE BORED FOR THE SHANK AND THREADED PORTIONS PER NDS 12.1.4.2.

CONNECTORS CALLED OUT BY LETTERS AND NUMBERS SHALL BE "STRONG-TIE" BY SIMPSON COMPANY, CATALOG TO BE THE LATEST EDITION, OR ENGINEER APPROVED EQUAL. CONNECTORS SHALL BE INSTALLED IN ACCORDANCE WITH THE MANUFACTURER'S RECOMMENDATIONS AND WITH THE NUMBER AND SIZE OF FASTENERS AS SPECIFIED BY THE MANUFACTURER. WHERE CONNECTOR STRAPS CONNECT TWO MEMBERS, PLACE ONE-HALF OF THE NAILS, SCREWS, OR BOLTS IN EACH MEMBER.

INSTALL SOLID BLOCKING AT ALL BEARING POINTS. ALL SHIMS SHALL BE SEASONED, DRIED, AND THE SAME GRADE (MINIMUM) AS MEMBERS CONNECTED.

GALVANIZATION

UNLESS NOTED OTHERWISE, STEEL CONNECTORS IN CONTACT WITH TREATED WOOD SHALL BE GALVANIZED ACCORDING TO THE FOLLOWING TABLE:

GALVANIZATION	UNTREATED WOOD	CCA-C	SBX	ACQ-C ACQ-D	CBA-A CA-B	OTHER BORATE	ACZA	OTHER PT WOOD
G90	X	X	X					
G185	X	X	X	X	X	X		
HDG	X	X	X	X	X	X		
STT300	X	X	X	X	X	X	X	X

G90 = 0.90 OZ. OF ZINC PER SQUARE FOOT OF AREA
G185 = 1.85 OZ. OF ZINC PER SQUARE FOOT OF AREA
HDG = HOT DIP GALVANIZED
STT300 = TYPE 316L STAINLESS STEEL

RATED SHEATHING

RATED SHEATHING SHALL BE GRADE C-D INT-APA WITH EXTERIOR GLUE OR OSB SHEATHING WITH EXTERIOR GLUE IN CONFORMANCE WITH IBC STANDARD 2303.1.5.

FIBER REINFORCED POLYMER (FRP) SHAPES AND FASTENERS

ALL FRP STRUCTURAL SHAPES SHALL BE 1625 SERIES PULTEX STANDARD PROFILES BY CREATIVE PULTRUSIONS, INC OR APPROVED EQUAL.

ALL FRP FLAT PANELS SHALL BE 1500/1525 OR 1625 SERIES PULTEX STANDARD PROFILES BY CREATIVE PULTRUSIONS, INC OR APPROVED EQUAL.

BOLTS AND NUTS SHALL BE SUPERSTUD FIBER REINFORCED POLYMER FASTENER SYSTEM BY CREATIVE PULTRUSIONS, INC OR APPROVED EQUAL.

ALL FRP PRODUCTS EXPOSED TO WEATHER SHALL CONTAIN AN ULTRAVIOLET INHIBITOR.

ALL FIELD CUT, DRILLED EDGES AND HOLES SHALL BE SEALED WITH CATALYZED RESIN AS RECOMMENDED BY MANUFACTURER.

FIBER REINFORCED POLYMER PRODUCTS SHALL BE DESIGNED AND PROVIDED BY HI-TECH COMPOSITE STRUCTURES OR ENGINEER-APPROVED EQUIVALENT MANUFACTURER. SHOP DRAWINGS ARE REQUIRED PER THE STRUCTURAL NOTES AND SHALL BE DESIGNED AND STAMPED BY THE MANUFACTURER'S PROFESSIONAL ENGINEER LICENSED IN THE SAME STATE AS THE PROJECT. REFER TO THE DESIGN LOADS SECTION OF THE STRUCTURAL NOTES FOR MAXIMUM WEIGHT OF SCREENWALL AS WELL AS LATERAL FORCE REQUIREMENTS.

STEEL GRATING

PROVIDE GALVANIZED STEEL FLOOR GRATING BY GRATING PACIFIC OR APPROVED EQUAL. BAND ALL GRATING EDGES.

TYPE OF GRATING: 19-W-4
SIZE OF BEARING BARS: 1 1/2" x 1/8" @ 1 3/16" OC
MAX SPAN: 7'-0"

MANUFACTURER/SUPPLIER TO PROVIDE CONNECTION OF GRATING TO STRUCTURAL STEEL WITH "G" CLIPS. SUBMIT SHOP DRAWINGS FOR APPROVAL. PROVIDE MIN. OF (1) "G" CLIP CONNECTOR BETWEEN GRATING & STRUCTURAL STEEL ADJACENT TO EACH LOCATION WHERE EQUIPMENT IS ATTACHED TO THE GRATING.

MOUNT EQUIPMENT TO GRATING USING GM SERIES CLIPS WITH 1/2"Ø THREADED STUDS MANUFACTURED BY G-CLIPS GRATING FASTENERS.

EXISTING BUILDING

CONTRACTOR SHALL VERIFY ALL DIMENSIONS, MEMBER SIZES AND CONDITIONS OF THE EXISTING BUILDING DEPICTED IN THE DRAWINGS, AND NOTIFY THE STRUCTURAL ENGINEER OF ANY DISCREPANCIES FOR POSSIBLE REDESIGN.

GENERAL

STRUCTURAL DRAWINGS SHALL BE USED IN CONJUNCTION WITH ARCHITECTURAL, CIVIL, ELECTRICAL, AND MECHANICAL DRAWINGS FOR BIDDING AND CONSTRUCTION. CONTRACTOR SHALL VERIFY ALL DIMENSIONS AND CONDITIONS FOR COMPATIBILITY BEFORE PROCEEDING. ANY DISCREPANCIES SHALL BE BROUGHT TO THE ATTENTION OF THE ARCHITECT BEFORE PROCEEDING.

CONTRACTOR TO SEE ARCHITECTURAL, CIVIL, ELECTRICAL AND MECHANICAL DRAWINGS FOR SIZE AND LOCATION OF PIPE, VENT, DUCT AND OTHER OPENINGS AND DETAILS NOT SHOWN ON THESE DRAWINGS.

CONTRACTOR SHALL BE RESPONSIBLE FOR ERECTION STABILITY AND TEMPORARY SHORING AS NECESSARY UNTIL PERMANENT SUPPORT AND STIFFENING ARE INSTALLED.

CONTRACTOR-INITIATED CHANGES SHALL BE SUBMITTED IN WRITING TO THE ARCHITECT AND STRUCTURAL ENGINEER FOR APPROVAL PRIOR TO FABRICATION OR CONSTRUCTION. CHANGES SHOWN ON SHOP DRAWINGS ONLY WILL NOT SATISFY THIS REQUIREMENT.

DRAWINGS INDICATE GENERAL AND TYPICAL DETAILS OF CONSTRUCTION. WHERE CONDITIONS ARE NOT SPECIFICALLY INDICATED BUT ARE OF A SIMILAR CHARACTER TO DETAILS SHOWN, SIMILAR DETAILS OF CONSTRUCTION SHALL BE USED, SUBJECT TO REVIEW AND APPROVAL BY THE ARCHITECT AND THE STRUCTURAL ENGINEER.

LEGEND

DEFINITION	SYMBOL	DEFINITION	SYMBOL
DIRECTION OF FRAMING		NATIVE SOIL	
EXTENT OF FRAMING		GRANULAR FILL	
COLUMNS		STRUCTURAL STEEL	
COLUMN BEARING ON BEAM	(A)	RATED SHEATHING	
BEAM CONTINUOUS OVER SUPPORT	CL (B)	SHEAR WALL (SEE SCHEDULE)	SWX
CONCRETE WALL		COLUMN MARK (SEE SCHEDULE)	CL
BEARING STUD WALL		FOOTING MARK (SEE SCHEDULE)	FX
NON-BEARING STUD WALL		HOLDOWN MARK (SEE SCHEDULE)	HD
BEARING STUD SHEAR WALL		HANGER MARK (SEE SCHEDULE)	X
NON-BEARING STUD SHEAR WALL		FLAG NOTE (SEE PLAN NOTES)	X
CMU WALL		STEEL MOMENT FRAME CONN.	

ABBREVIATIONS

(A)	ABOVE	GLB	GLUE-LAMINATED BEAM
AB	ANCHOR BOLT	HORIZ	HORIZONTAL
ALT	ALTERNATE	KP	KING POST
ARCH	ARCHITECT	KSI	KIPS PER SQUARE INCH
(B)	BELOW	L	ANGLE
BD	BAR DIAMETER	MECH	MECHANICAL
BLKG	BLOCKING	MF	MOMENT FRAME
BM	BEAM	MTL	METAL
BOT	BOTTOM	NS	NEAR SIDE
BRNG	BEARING	OC	ON CENTER
BTWN	BETWEEN	OPP	OPPOSITE
CJP	COMPLETE JOINT PENETRATION	PL	PLATE
CLR	CLEAR	PLCS	PLACES
CMU	CONCRETE MASONRY UNIT	PSI	POUNDS PER SQUARE INCH
COL	COLUMN	PSF	POUNDS PER SQUARE FOOT
CONC	CONCRETE	P/T	POST TENSIONED
CONN	CONNECTION	PT	PRESSURE TREATED
CONT	CONTINUOUS	REINF	REINFORCING
COORD	COORDINATE	REQ'D	REQUIRED
DBL	DOUBLE	SCHED	SCHEDULE
DET	DETAIL	SIM	SIMILAR
DIA	DIAMETER	SOG	SLAB ON GRADE
DIM	DIMENSION	STD	STANDARD
DIR	DIRECTION	STIFF	STIFFENER
EA	EACH	STL	STEEL
ELEV	ELEVATION	SYMM	SYMMETRICAL
ES	EACH SIDE	SW	SHEARWALL
EX	EXISTING	TOC	TOP OF CONCRETE
EXP	EXPANSION	TOS	TOP OF STEEL
FLR	FLOOR	TOW	TOP OF WALL
FDN	FOUNDATION	TYP	TYPICAL
FTG	FOOTING	UNO	UNLESS NOTED OTHERWISE
FS	FAR SIDE	VERT	VERTICAL
GC	GENERAL CONTRACTOR	WF	WIDE FLANGE

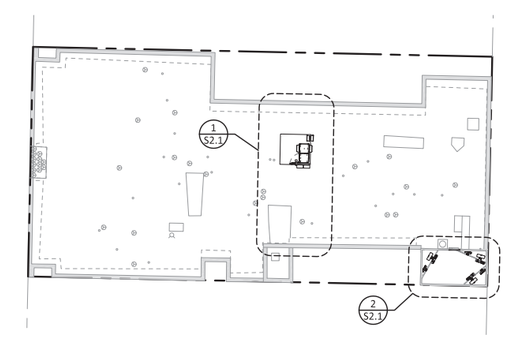

1 OVERALL ROOF PLAN
SCALE: 1" = 20'
20 0 10 20 40

T-Mobile

PROJECT INFORMATION:

WELLER KING/FUJISADA CONDOS
SE03494E

510 6TH AVE S
SEATTLE, WA 98104

ISSUED FOR:

BUILDING PERMIT

REVISION HISTORY:

NO.	DATE:	DESCRIPTION:	CHK. BY:
1	05/31/2022	ISSUED FOR PERMIT	JGG

PLANS PREPARED BY:

B. J. THOMAS, P.E.
7607 80TH AVE NE
MARYSVILLE, WA 98270
206-851-1106

DRAWN BY: JEG **CHK. BY:** JGG

LICENSURE:

JOSEPH G. GALUSHA · STATE OF WASHINGTON · 38551 · STRUCTURAL ENGINEER · PROFESSIONAL ENGINEER
05/31/22
CG# 22070.603

DRAWING INFORMATION:

DO NOT SCALE DRAWINGS. CONTRACTOR MUST VERIFY ALL DIMENSIONS AND ADVISE CONSULTANTS OF ANY ERRORS AND OMISSIONS. ALL PREVIOUS ISSUES OF THIS DRAWING ARE SUPERSEDED BY THE LATEST REVISION. THE INFORMATION CONTAINED IN THIS SET OF DOCUMENTS IS PROPRIETARY BY NATURE. ANY USE OR DISCLOSURE OTHER THAN WHICH IS RELATED TO NAMED CLIENT IS STRICTLY PROHIBITED.

DRAWING TITLE:

STRUCTURAL NOTES AND ROOF PLAN

DRAWING NUMBER:

S-1

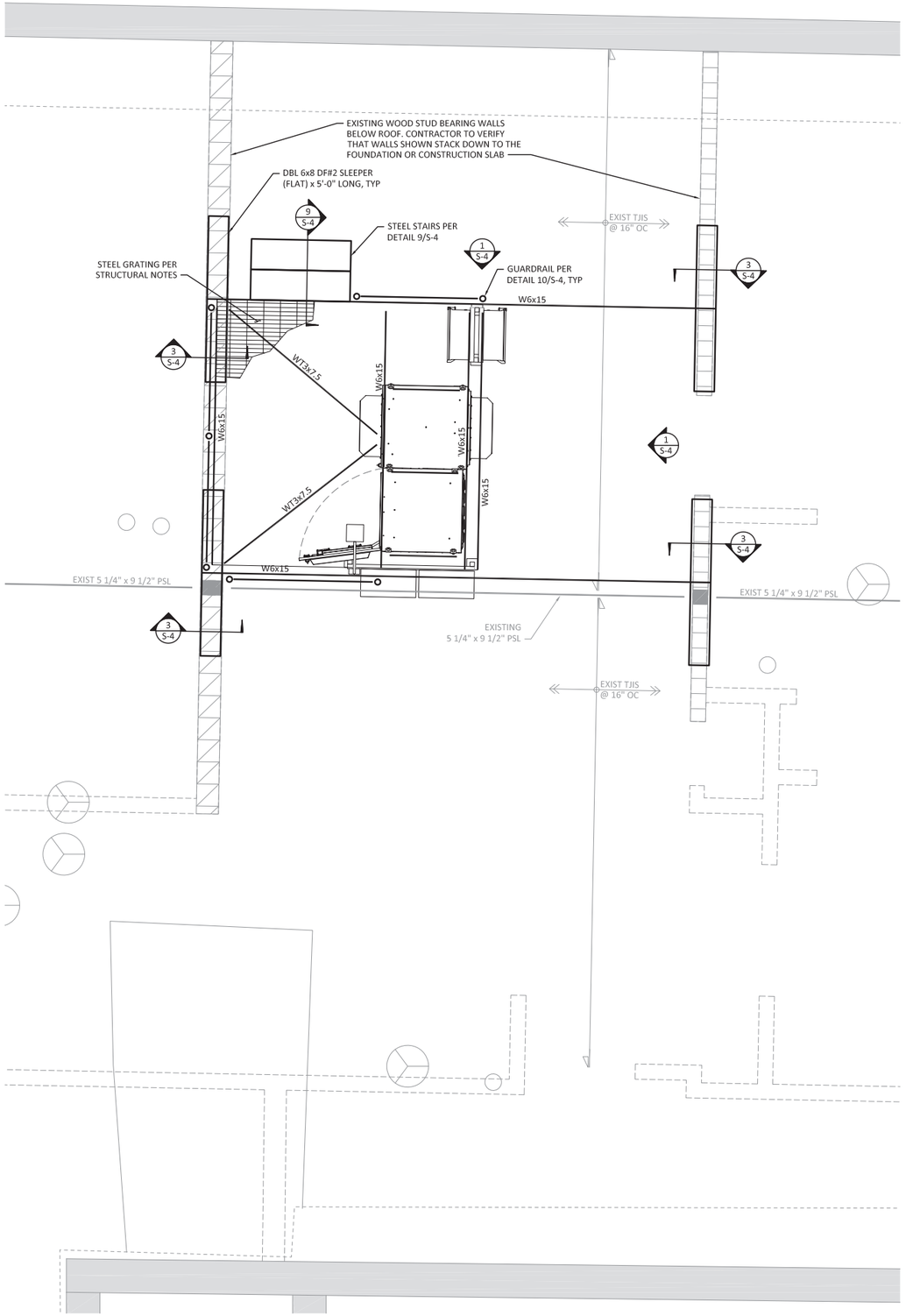

1 EQUIPMENT PLATFORM FRAMING PLAN

SCALE: 1/2" = 1'-0"

1'-0" 0 2'-0" 4'-0"

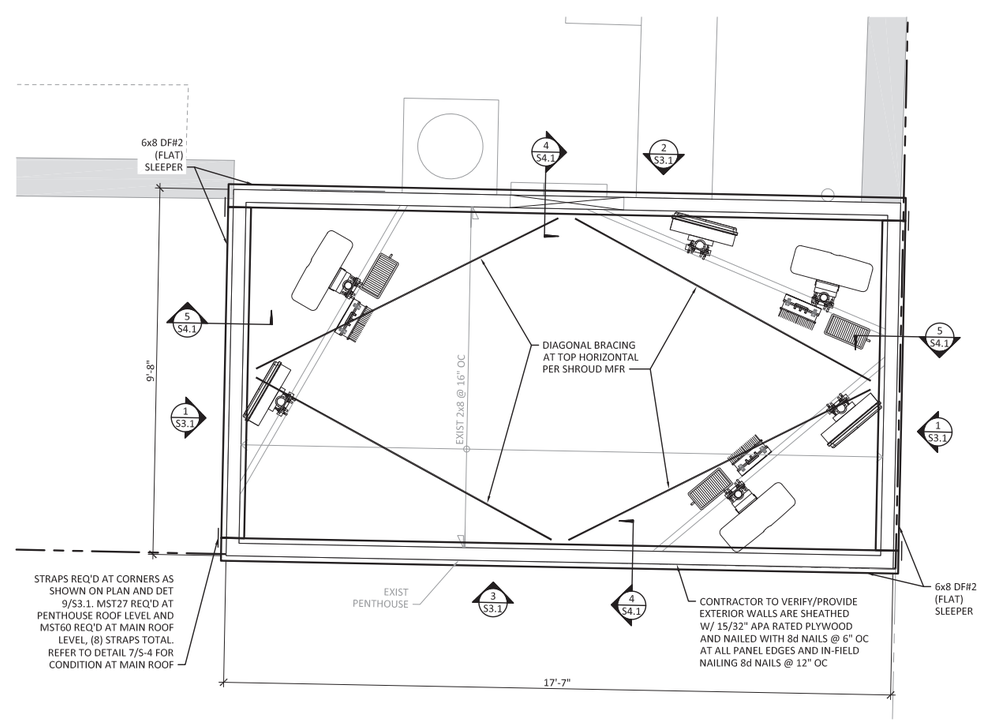

2 EQUIPMENT PLATFORM FRAMING PLAN

SCALE: 1/2" = 1'-0"

1'-0" 0 2'-0" 4'-0"

T-Mobile

PROJECT INFORMATION:

WELLER KING/FUJISADA CONDOS
SE03494E

510 6TH AVE S
SEATTLE, WA 98104

ISSUED FOR:

BUILDING PERMIT

REVISION HISTORY:

NO.	DATE:	DESCRIPTION:	CHK. BY:
1	05/31/2022	ISSUED FOR PERMIT	JGG

PLANS PREPARED BY:

B. J. THOMAS, P.E.
7607 80TH AVE NE
MARYSVILLE, WA 98270
206-851-1106

DRAWN BY:	CHK. BY:
JEG	JGG

LICENSURE:

JOSEPH G. GALLEGOS
STATE OF WASHINGTON
28553
STRUCTURAL ENGINEER
PROFESSIONAL ENGINEER
05/31/22

CG# 22070.603

DRAWING INFORMATION:

DO NOT SCALE DRAWINGS. CONTRACTOR MUST VERIFY ALL DIMENSIONS AND ADVISE CONSULTANTS OF ANY ERRORS AND OMISSIONS. ALL PREVIOUS ISSUES OF THIS DRAWING ARE SUPERSEDED BY THE LATEST REVISION. THE INFORMATION CONTAINED IN THIS SET OF DOCUMENTS IS PROPRIETARY BY NATURE. ANY USE OR DISCLOSURE OTHER THAN WHICH IS RELATED TO NAMED CLIENT IS STRICTLY PROHIBITED.

DRAWING TITLE:

ENLARGED PLANS

DRAWING NUMBER:

S-2

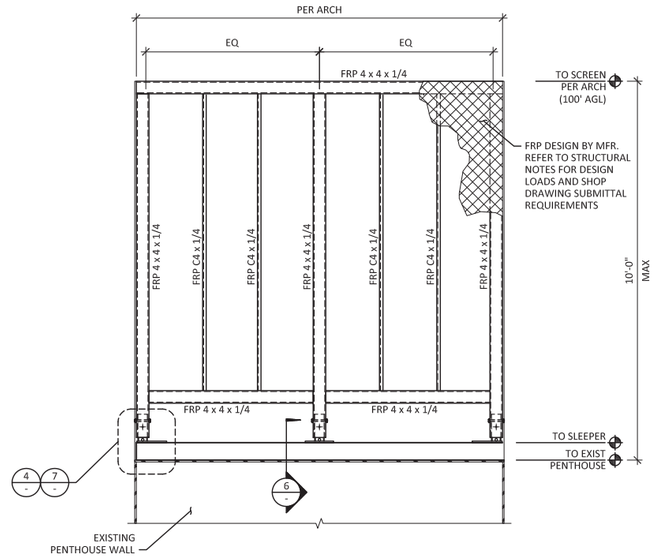

1 SCREEN WALL ELEVATION
SCALE: 1/2" = 1'-0"

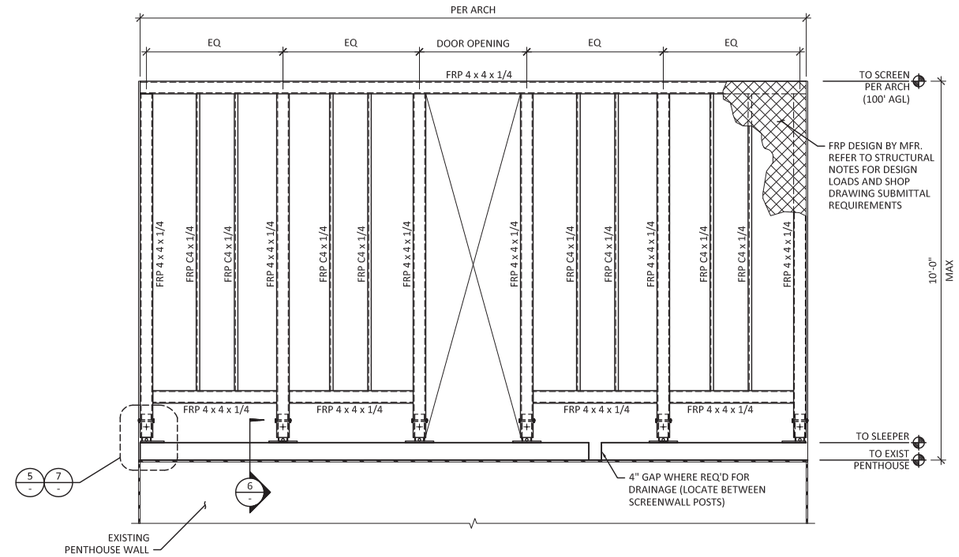

2 SCREEN WALL ELEVATION
SCALE: 1/2" = 1'-0"

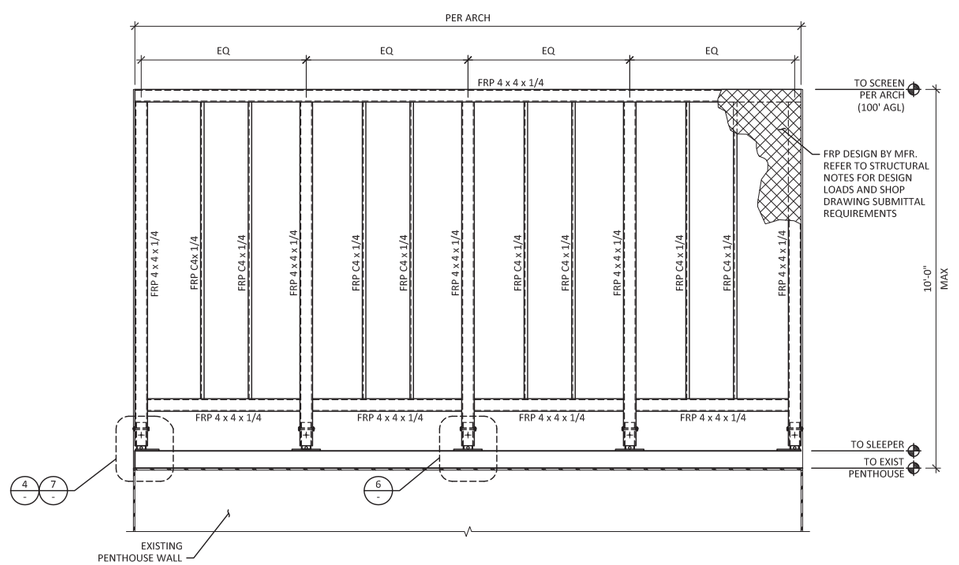

3 SCREEN WALL ELEVATION
SCALE: 1/2" = 1'-0"

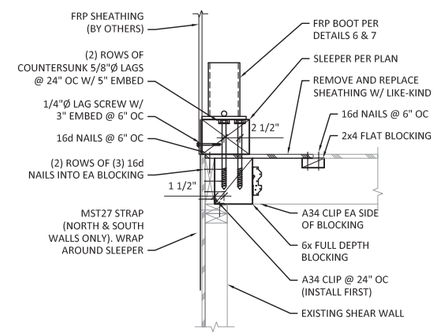

4 FRP SCREEN CONN (PERPENDICULAR)
SCALE: 1" = 1'-0"

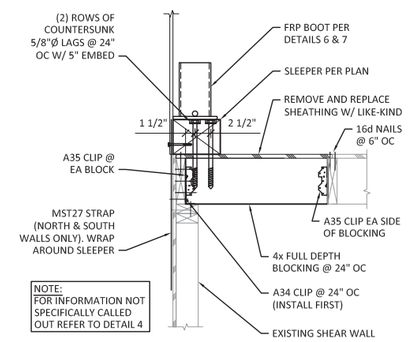

NOTE:
FOR INFORMATION NOT SPECIFICALLY CALLED OUT REFER TO DETAIL 4

5 FRP SCREEN CONN (PARALLEL)
SCALE: 1" = 1'-0"

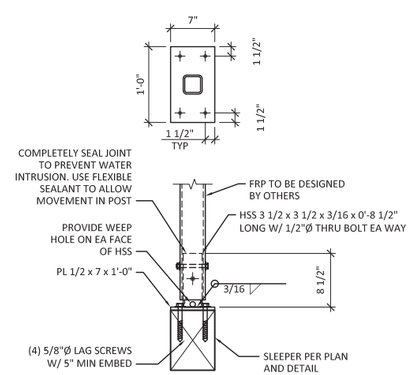

6 FRP BOOT CONN
SCALE: 1" = 1'-0"

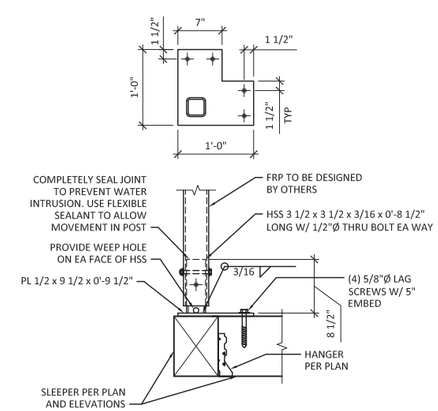

7 FRP BOOT CORNER CONN
SCALE: 1" = 1'-0"

T-Mobile

PROJECT INFORMATION:

WELLER KING/FUJISADA CONDOS
SE03494E

510 6TH AVE S
SEATTLE, WA 98104

ISSUED FOR:

BUILDING PERMIT

REVISION HISTORY:

NO.	DATE:	DESCRIPTION:	CHK. BY:
1	05/31/2022	ISSUED FOR PERMIT	JGG

PLANS PREPARED BY:

B. J. THOMAS, P.E.
7607 80TH AVE NE
MARYSVILLE, WA 98270
206-851-1106

DRAWN BY:	CHK. BY:
JEG	JGG

LICENSURE:

JOSEPH G. GALUSHA — STATE OF WASHINGTON — 38553 — STRUCTURAL ENGINEER — PROFESSIONAL ENGINEER
05/31/22
CG# 22070.603

DRAWING INFORMATION:

DO NOT SCALE DRAWINGS. CONTRACTOR MUST VERIFY ALL DIMENSIONS AND ADVISE CONSULTANTS OF ANY ERRORS AND OMISSIONS. ALL PREVIOUS ISSUES OF THIS DRAWING ARE SUPERSEDED BY THE LATEST REVISION. THE INFORMATION CONTAINED IN THIS SET OF DOCUMENTS IS PROPRIETARY BY NATURE. ANY USE OR DISCLOSURE OTHER THAN WHICH IS RELATED TO NAMED CLIENT IS STRICTLY PROHIBITED.

DRAWING TITLE:

ELEVATIONS AND DETAILS

DRAWING NUMBER:

S-3

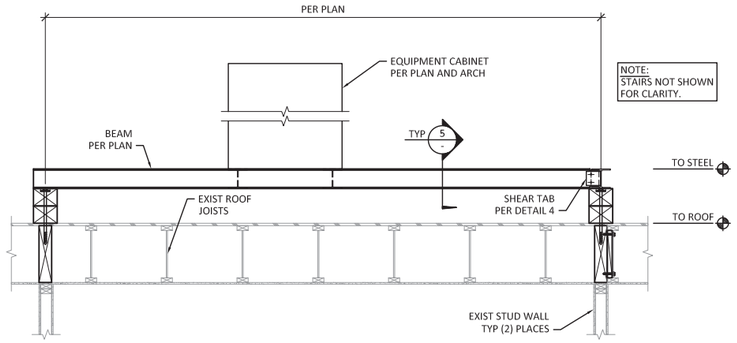

1 TYPICAL EQUIPMENT FRAME ELEVATION
SCALE: 1/2" = 1'-0"

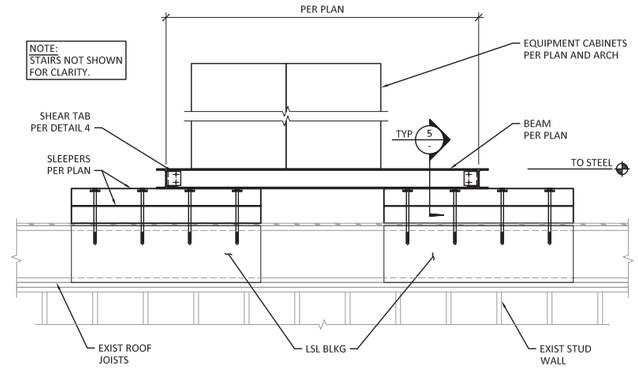

2 TYPICAL EQUIPMENT FRAME ELEVATION
SCALE: 1/2" = 1'-0"

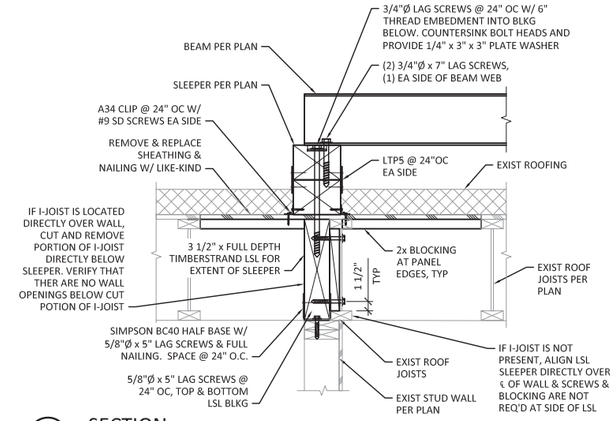

3 SECTION
SCALE: 1" = 1'-0"

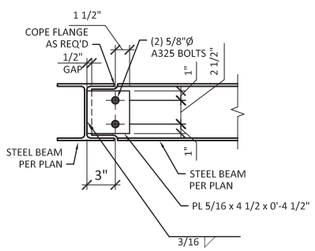

4 TYP SINGLE PLATE SHEAR CONN
SCALE: 1 1/2" = 1'-0"

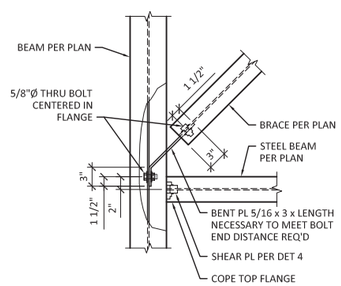

5 TYP BRACE CONN
SCALE: 1" = 1'-0"

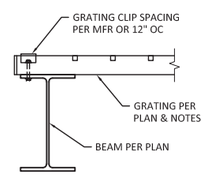

6 SECTION
SCALE: 1 1/2" = 1'-0"

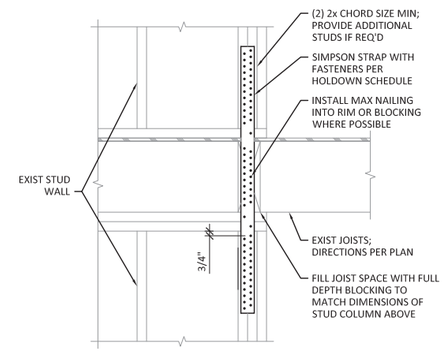

7 TYPICAL STRAP HOLDOWN DETAIL
SCALE: 1" = 1'-0"

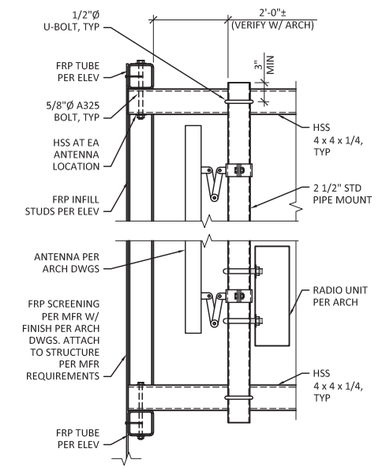

8 SECTION
SCALE: 1" = 1'-0"

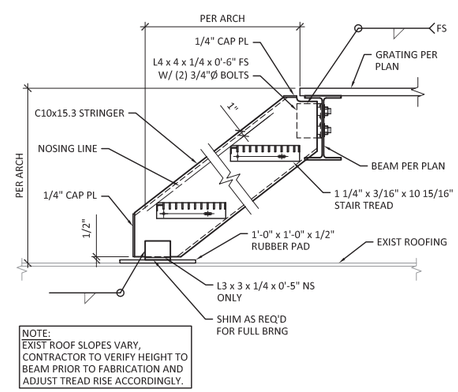

9 SECTION
SCALE: 1" = 1'-0"

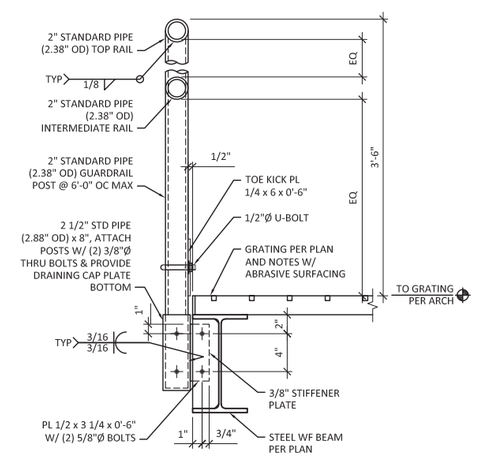

10 GUARDRAIL CONNECTION TO STEEL FRAMING
SCALE: 1 1/2" = 1'-0"

T-Mobile

PROJECT INFORMATION:

WELLER KING/FUJISADA CONDOS
SE03494E

510 6TH AVE S
SEATTLE, WA 98104

ISSUED FOR:

BUILDING PERMIT

REVISION HISTORY:

NO.	DATE:	DESCRIPTION:	CHK. BY:
1	05/31/2022	ISSUED FOR PERMIT	JGG

PLANS PREPARED BY:

B. J. THOMAS, P.E.
7607 80TH AVE NE
MARYSVILLE, WA 98270
206-851-1106

DRAWN BY:	CHK. BY:
JEG	JGG

LICENSURE:

CG# 22070.603

DRAWING INFORMATION:

DO NOT SCALE DRAWINGS. CONTRACTOR MUST VERIFY ALL DIMENSIONS AND ADVISE CONSULTANTS OF ANY ERRORS AND OMISSIONS. ALL PREVIOUS ISSUES OF THIS DRAWING ARE SUPERSEDED BY THE LATEST REVISION. THE INFORMATION CONTAINED IN THIS SET OF DOCUMENTS IS PROPRIETARY BY NATURE. ANY USE OR DISCLOSURE OTHER THAN WHICH IS RELATED TO NAMED CLIENT IS STRICTLY PROHIBITED.

DRAWING TITLE:

ELEVATIONS AND DETAILS

DRAWING NUMBER:

S-4