BLOSSOM APARTMENTS

214-220 5th Ave. S, Seattle

COA SUBMITTAL

OWNER / DEVELOPER	VIBRANT CITIES Contact: James Wong PH: (206) 605-6188 EMAIL: jwong@VibrantCities.com Address: 606 Maynard Ave S Suite 251 Seattle WA 98104
CONSTRUCTION MANAGEMENT CONSULTANT	STOLLER LLC Contact: Ryan Stoller PH: (206) 660-0329 EMAIL: ryan@stollerllc.com Address: 901 32nd Ave E Suite Seattle WA 98112
ARCHITECT	LINK DESIGN GROUP Contact: Scott Douglas PH: 425.298.0080 EMAIL: scott.douglas@linkdesigngroup.com Address: 439 Kirkland Way Suite Kirkland WA 98033
STRUCTURAL ENGINEER	CT ENGINEERING Inc. Contact: Tyler Wandschneider PH: 206.285.4512 EMAIL: tylerw@ctengineering.com Address: 180 Nickerson Street Suite 302 Seattle WA 98109
CIVIL ENGINEER	GREEN LAKE ENGINEERING Contact: Robert Kehrli PH: 206.898.4269 EMAIL: bob.kehrli@greenlakeengineering.com Address: 6045 4TH Avenue NE Suite Seattle WA 98115
LANDSCAPE ARCHITECT	KLLA Landscape Architects Inc. Contact: Ken Large PH: 425.836.4578 EMAIL: klla@ comcast.net Address: 21803 NE 17TH COURT Suite Sammamish WA 98074
GEOTECHNICAL ENGINEER	PanGEO, Inc. Contact: Siew L. Tan PH: 206.262.0370 EMAIL: stan@pangeoinc.com Address: 3213 Eastlake Avenue East Suite B Seattle WA 98102
ENVELOPE CONSULTANT	BEE Consulting Contact: Patrick McMahon PH: 425.672.3900 EMAIL: Patrick@bee-engineers.com Address: 170 W Dayton St Suite 206 Edmonds WA 98020
MEP CONSULTANT	Emerald City Engineers, Inc. Contact: Adam C. French PH: 425.741.1200 EMAIL: afrench@emeraldcityeng.com Address: 21705 Highway 99 Suite Lynnwood WA 98036
ADA CONSULTANT	Endelman & Associates PLLC Contact: PH: 206.324.6462 EMAIL: One Union Square, 600 University St. Suite 1515 Seattle WA 98101

LINK

LINK DESIGN GROUP LLC.

439 Kirkland Way
Kirkland, WA. US. 98033
+1.425.298.0080

602 Pengjiang RD, E461 ShangHai, China 200072
上海市静安区彭江路602号E座461室 邮编 200072
+86.21.6667.0228

Project No: Enter Client Supplied Number
XXXXXXXXXX

Client/Owner/Project Address

Owner
VIBRANT CITIES
606 Maynard Ave S
Suite 251
Seattle, WA 98104

Consultant

BLOSSOM APARTMENTS - COA SUBMITTAL

Issue Drawing Log

	09/04/20	INITIAL PRICING SET
	01/21/21	PERMIT SET SUBMITTAL
	03/05/21	COA SUBMITTAL

Professional Certification - I certify that these documents were prepared or approved by me, and that i am a duly licensed Architect under the laws of the state of Washington, License number _____, Expiration date _____.

8628 REGISTERED ARCHITECT
Jenny Li
JENNY LI
STATE OF WASHINGTON

SDCI APPROVAL STAMP

©LINK DESIGN GROUP LLC.
All rights reserved. No part of this document may be reproduced in any form or by any means without permission in writing from LINK DESIGN GROUP LLC.

PROJECT NUMBER	20-0108A
PROJECT MANAGER	JX
DRAWN BY	DS, MB

Sheet Identification

COVER SHEET

G000

ABBREVIATIONS

ACOUST	ACOUSTICAL
ACSF	ACCESS FLOORING
ACT	ACOUSTICAL CEILING TILE OR PANEL
ADJ	ADJACENT
AFF	ABOVE FINISHED FLOOR
AL	ALUMINUM
ALT	ALTERNATE
ANOD	ANODIZED
APPROX	APPROXIMATE
ARCH	ARCHITECTURAL
ASPH	ASPHALT
BD	BOARD
BIT	BITUMINOUS
BLDG	BUILDING
BLK'G	BLOCKING
BM	BEAM
BO	BOTTOM OF
BOT	BOTTOM
BTWN	BETWEEN
CAB	CABINET
CB	CATCH BASIN
CEM	CEMENT
CG	CORNER GUARD
CI	CAST IRON
CIP	CAST IN PLACE
CJ	CONSTRUCTION JOINT, CONTROL JOINT
CL	CENTERLINE
CLG	CEILING
CLR	CLEAR
CMU	CONCRETE MASONRY UNIT
COL	COLUMN
CONC	CONCRETE
CONN	CONNECTION
CONST	CONSTRUCTION
CONT	CONTINUOUS
CORR	CORRIDOR
CPT	CARPET
CR	CARD READER
CT	CERAMIC TILE
CU FT	CUBIC FEET
DEPT	DEPARTMENT
DF	DRINKING FOUNTAIN
DIA	DIAMETER
DIM	DIMENSION
DISP	DISPENSER
DN	DOWN
DS	DOWNSPOUT
DTL	DETAIL
DWG	DRAWING
EA	EACH
EFS	EXTERIOR FINISH SYSTEM
EIFS	EXTERIOR INSULATION & FINISH SYSTEM
EJ	EXPANSION JOINT
EL	ELEVATION
ELEC	ELECTRICAL
ELEV	ELEVATOR
EPT	EPOXY PAINT
EPX	EPOXY-QUARTZ FLOORING
EQ	EQUAL
EQUIP	EQUIPMENT
EW	EACH WAY
EWC	ELECTRIC WATER COOLER
EWH	ELECTRIC WATER HEATER
EXH	EXHAUST
EXIST	EXISTING
EXP	EXPOSED STRUCTURE
EXT	EXTERIOR
FAC FIN	FACTORY FINISH
FD	FLOOR DRAIN
FDN	FOUNDATION
FE	FIRE EXTINGUISHER
FEC	FIRE EXTINGUISHER CABINET
FF	FINISHED FLOOR
FF&E	FURNITURE, FIXTURES & EQUIPMENT
FIN	FINISH
FLR	FLOOR
FO	FACE OF
FOC	FACE OF CONCRETE
FOF	FACE OF FINISH
FOIC	FURNISHED BY OWNER INSTALLED BY CONTRACTOR
FOIO	FURNISHED BY OWNER INSTALLED BY OWNER
FOS	FACE OF STUD
FRP	FIBER REINFORCED PLASTIC
FRT	FIRE RETARDANT TREATED
FS	FLOOR SINK
FT	FOOT/FEET
FTG	FOOTING
FURN	FURNISHED
FURR	FURRING
FWP	FABRIC WRAP WALL PANEL
GA	GAUGE
GALV	GALVANIZED
GB	GRAB BAR
GC	GENERAL CONTRACTOR
GI	GALVANIZED IRON
GL	GLASS
GWB	GYPSUM WALLBOARD
GYP	GYPSUM
HB	HOSE BIBB
HC	HOLLOW CORE
HDWR	HARDWARE
HG	HARDWARE GROUP
HM	HOLLOW METAL
HORIZ	HORIZONTAL
HP	HIGH POINT
HT	HEIGHT
HTR	HEATER
HVAC	HEATING, VENTILATION & AIR CONDITIONING
IBC	INTERNATIONAL BUILDING CODE
ID	INSIDE DIAMETER
IE	INVERT ELEVATION
IN	INCH
INSUL	INSULATION
INT	INTERIOR
JAN	JANITOR
JT	JOINT
L	LENGTH, LONG
LAM	LAMINATE
LB	POUND
LF	LINEAR FEET
LIQ	LIQUID
LMC	LINEAR METAL CEILING
LP	LOW POINT
LT	LIGHT
LT WT	LIGHT WEIGHT
MAS	MASONRY
MAX	MAXIMUM
MECH	MECHANICAL
MEZZ	MEZZANINE
MFCR	MANUFACTURER
MH	MANHOLE
MHO	MAGNETIC HOLD OPEN
MIN	MINIMUM, MINUTES
MISC	MISCELLANEOUS
MO	MASONRY OPENING
MR	MOISTURE RESISTANT
MTD	MOUNTED
MTG	MOUNTING
MTL	METAL
MULL	MULLION
NA	NOT APPLICABLE
NIC	NOT IN CONTRACT
NO	NUMBER
NOM	NOMINAL
NTS	NOT TO SCALE
OA	OVERALL
OC	ON CENTER
OD	OUTSIDE DIAMETER
OH	OVERHEAD
OPN'G	OPENING
OPP	OPPOSITE
PERP	PERPENDICULAR
PL	PROPERTY LINE, PLATE
PLAM	PLASTIC LAMINATE
PLAS	PLASTER
PLBG	PLUMBING
PLT	PLATE
PLYWD	PLYWOOD
PNL	PANEL
PR	PAIR
PREFIN	PREFINISHED
PRESS T	PRESSURE TREATED
PROJ	PROJECT
PT	POST-TENSIONED, POINT, PAINT
QT	QUARRY TILE
QTR	QUARTER
R	RADIUS, RISER
RB	RESILIENT BASE, RUBBER BASE
RCP	REFLECTED CEILING PLAN
RD	ROOF DRAIN
REC'D	RECEIVED
REF	REFERENCE
REFR	REFRIGERATOR
REINF	REINFORCING
REQ'D	REQUIRED
RF	RUBBER FLOORING
RM	ROOM
RO	ROUGH OPENING
ROW	RIGHT OF WAY
SAN	SANITARY
SC	SOLID CORE
SCHED	SCHEDULE
SECT	SECTION
SF	SQUARE FEET
SHT	SHEET
SHT MTL	SHEET METAL
SIM	SIMILAR
SJ	SCORE JOINT
SPEC	SPECIFIED, SPECIFICATION
SQ	SQUARE
SS	SANITARY SEWER
SST	STAINLESS STEEL
ST	STONE MASONRY OR TILE
STD	STANDARD
STL	STEEL
STOR	STORAGE
STRUCT	STRUCTURAL
SUSP	SUSPENDED
SYM	SYMMETRICAL
SYS	SYSTEM
T	TOP, TREAD
T&B	TOP AND BOTTOM
T&G	TONGUE & GROOVE
TBD	TO BE DETERMINED
TEL	TELEPHONE
TEMP	TEMPORARY
TER	TERRAZZO
TOC	TOP OF CONCRETE
TOJ	TOP OF JOIST
TOM	TOP OF MASONRY
TOP	TOP OF PARAPET
TOS	TOP OF STEEL / STUD
TOW	TOP OF WALL
TYP	TYPICAL
UL	UNDERWRITER'S LABORATORIES
UNO	UNLESS NOTED OTHERWISE
UTL	UTILITY
VAR	VARNISH
VB	VINYL BASE
VCT	VINYL COMPOSITION TILE
VERT	VERTICAL
VEST	VESTIBULE
VIF	VERIFY IN FIELD
VP	VENEER PLASTER
VT	VINYL TILE
VTF	VINYL TILE FLOORING
W/	WITH
W/O	WITHOUT
WB	WOOD BASE
WC	WATER CLOSET, WALL COVERING
WD	WOOD
WDC	WOOD CEILING
WDP	WOOD PANELING
WF	WOOD FLOORING
WIN	WINDOW
WOM	WALK OF MAT OR CARPET
WP	WATERPROOF, OR WORK POINT
WR	WATER RESISTANT
WRB	WEATHER RESISTANT BARRIER
WS	WEATHERSTRIP
WSCT	WAINSCOT
WT	WEIGHT
WWF	WELDED WIRE FABRIC
YD	YARD

SYMBOL LEGEND

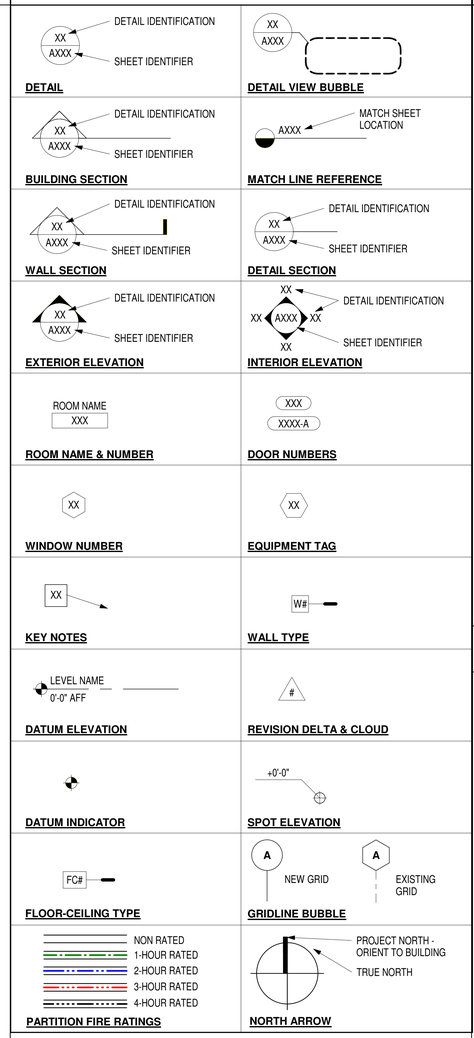

VICINITY MAP

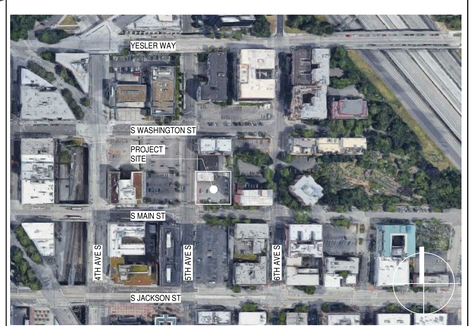

PROJECT INFORMATION

PROJECT ADDRESS:	214 - 220 5TH AVE. S, SEATTLE, WA 98104
PROJECT DESCRIPTION:	THE PROJECT IS TO CONSTRUCT AN 8-STORY RESIDENTIAL MIXED-USE BUILDING ABOVE THE GRADE, AND 1-STORY STORAGE/ MECHANICAL SPACES BELOW THE GRADE. THE BUILDING WILL CONTAIN 184 RESIDENTIAL UNITS WITH AN AMENITY SPACE, ROOFTOP TERRACE AND RETAIL/COMMERCIAL SPACE AT THE STREET LEVEL.
CONSTRUCTION TYPES:	6 STORIES TYPE IIIA OVER 2 STORIES TYPE IA
ASSESOR'S PARCEL NUMBER:	982070-0100 & 524780-1545
LEGAL DESCRIPTION	214 5TH AVENUE SOUTH, SEATTLE, WA YESLER & MC INTOSHS SUPL MAYNARDS & 3 BLK 32 MAYNARDS PLAT PLAT BLOCK: 32 & PLAT LOT: 3 220 5TH AVENUE SOUTH, SEATTLE, WA MAYNARDS D S PLAT PLAT BLOCK: 32 PLAT LOT: 4
ZONING:	IDR 45/125-270 (SEATTLE ZONING & LAND USE)
OVERLAYS:	ASIAN DESIGN CHARACTER DISTRICT INTERNATIONAL SPECIAL REVIEW DISTRICT
BUILDING CODE:	2015 SEATTLE BUILDING CODE (SBC) 2015 SEATTLE ENERGY CODE (SEC) 2015 SEATTLE MECHANICAL CODE (SMC)
RELEVANT ZONING CODE AND DESIGN GUIDELINES:	CITY OF SEATTLE MUNICIPAL CODE - CHAPTER 23 INTERNATIONAL SPECIAL REVIEW DISTRICT GUIDELINES
PROJECT PARCEL SIZE:	14,400 SF

AREA SUMMARY

	AREAS					
	UTILITY - GFA	PARKING GFA	GROSS BUILDING AREA [COMMERCIAL]	GROSS BUILDING AREA [RESIDENTIAL]	INDOOR AMENITY AREA	FLOOR TOTAL
ROOF	769			830		1,599
L 08	99			11,632	746	12,477
L 07	222			12,684		12,906
L 06	102			12,803		12,905
L 05	102			12,803		12,905
L 04	222			12,684		12,906
L 03	102			12,630		12,732
L 02	487			11,999		12,486
L 01	1,051	4,670	4,625	1,035	1,433	12,814
B 01	1,509	1,713		2,005		5,227
	4,665	6,383	4,625	91,105	2,179	108,957

	CONSTRUCTION		
	FLOOR ELEVATION [FT]	Type IA GROSS BUILDING AREA	Type IIIA GROSS BUILDING AREA
ROOF	158'-0"		1,599
L 08	143'-0"		12,477
L 07	134'-0"		12,906
L 06	125'-0"		12,905
L 05	116'-0"		12,905
L 04	107'-0"		12,906
L 03	98'-0"		12,732
L 02	89'-0"	12,486	
L 01	73'-6"	12,814	
B 01	61'-0"	5,227	
		30,527	78,430

	UNITS		
	TOTAL UNIT COUNT	1-BED [AVG SIZE: 603 SF]	STUDIO [AVG SIZE: 395 SF]
	25	1	24
	27	1	26
	27	1	26
	27	1	26
	27	1	26
	27	1	26
	24	3	21
	184	9	175

SHEET INDEX

GENERAL
G000 COVER SHEET
G101.1 PROJECT DATA
G102 GENERAL NOTES
G103 LAND USE PRE-SUBMITTAL MEETING MINUTES
G104 ZONING CODE SUMMARY
G104.1 ZONING DEPARTURES
G104.2 ZONING DEPARTURES
G104.3 DESIGN GUIDLINES
G105 STRUCTURE HEIGHT / FIRE SEPARATION DIAGRAMS
G106 RESIDENTIAL COMMON REC AREA, GRADE PLANE CALCULATIONS
G107.1 LIFE SAFETY PLANS
G107.2 LIFE SAFETY PLANS
G107.3 LIFE SAFETY PLANS
G108.1 BUILDING CODE ANALYSIS
G108.2 BUILDING CODE ANALYSIS
G108.3 BUILDING CODE ANALYSIS
G108.4 BUILDING CODE ANALYSIS
G109.1 ADA CODE STANDARDS
G109.2 ADA CODE STANDARDS
G110 ENLARGED PLANS - TRASH ROOM AND PARKING
G111.1 EXTERIOR BUILDING FINISHES DIAGRAMS
G111.2 EXTERIOR BUILDING FINISHES DIAGRAMS
22

SURVEY
SRV SRV
1

CIVIL
C3.00 DEMOLITION PLAN
SIP-1 COVER SHEET, NOTES & INDEX
SIP-2 S MAIN ST & 5TH AVE. S PLAN
SIP-3 STREET TREE LANDSCAPE PLAN
4

LANDSCAPE
L-1.1 LANDSCAPE PLAN & DETAILS GROUND LEVEL
L-1.2 LANDSCAPE PLAN & DETAILS LEVEL 02
L-1.3 LANDSCAPE PLAN & DETAILS ROOF PLAN
L-1.4 PRODUCTS AND SPECIFICATIONS
L-2.1 GREEN FACTOR PLAN - GROUND LEVEL
L-2.2 GREEN FACTOR PLAN - LEVEL 02
L-2.3 GREEN FACTOR PLAN - ROOF PLAN
L-3.1 COLORED LANDSCAPE PLAN & DETAILS - GROUND LEVEL
L-3.2 COLORED LANDSCAPE PLAN & DETAILS - LEVEL 02
L-3.3 COLORED LANDSCAPE PLAN & DETAILS - ROOF PLAN
10

ARCHITECTURAL
A101 ARCHITECTURAL SITE PLAN
A200 BASEMENT FLOOR PLAN
A201 1ST FLOOR PLAN
A202 2ND FLOOR PLAN
A203 3RD FLOOR PLAN
A204 4TH FLOOR PLAN
A205 5TH FLOOR PLAN
A206 6TH FLOOR PLAN
A207 7TH FLOOR PLAN
A208 8TH FLOOR PLAN
A210 ROOF PLAN
A211 ROOF DRAIN PLAN
A300 BASEMENT RCP
A301 1ST FLOOR RCP
A310 ENLARGED CORRIDOR PLAN & RCP - LEVEL 2
A311 ENLARGED CORRIDOR PLAN & RCP - LEVELS 3-7
A312 ENLARGED CORRIDOR PLAN & RCP - LEVEL 8
A401 EXTERIOR ELEVATIONS
A402 EXTERIOR ELEVATIONS
A403 EXTERIOR ELEVATIONS
A404 EXTERIOR ELEVATIONS
A405 ENLARGED STOREFRONT ELEVATION
A450 BUILDING SECTIONS
A451 BUILDING SECTIONS
A501 WALL SECTIONS
A502 WALL SECTIONS
A503 WALL SECTIONS
A503.1 WALL SECTIONS
A504 WALL SECTIONS
A505 WALL SECTIONS
A506 WALL SECTIONS & ENLARGED PLANS
A701 ENLARGED UNIT PLANS
A702 ENLARGED UNIT PLANS
A703 ENLARGED UNIT PLANS
A704 ENLARGED PLANS & ELEVATIONS
A705 ENLARGED PLANS & ELEVATIONS
A706 ENLARGED PLANS
A707 ENLARGED PLANS
A750 STAIR & ELEVATOR DETAILS
A751 STAIR PLANS AND SECTIONS
A752 STAIR PLANS & SECTION
A753 STAIR & CORE PLANS
A754 ELEVATOR CORE SECTION
A804 WALL TYPES
A805 WALL TYPES
A806 FLOOR-CEILING TYPES
A820 WINDOW SCHEDULE
A821 STOREFRONT WINDOW SCHEDULE
A830 DOOR SCHEDULE
A831 DOOR SCHEDULE
A901 EXTERIOR DETAILS
A902 CONCRETE DETAILS
A903 EXTERIOR DETAILS
A904 EXTERIOR DETAILS
A905 EXTERIOR DETAILS
55

Shoring
SS1.0 Shoring Notes
SS1.1 Shoring Notes
SS2.0 Shoring Plan
SS3.0 Elevations and Details
SS3.1 Elevations and Details
SS4.0 Details
SS4.1 Sections

Structural
S1.01 Structural Notes
S1.02 Structural Notes
S1.10 IBC 2015 Inspection Tables
S1.20 Shearwall Schedule & Details
S1.30 Holdown Schedule & Details
S1.31 Holddown and Rebar Details
S2.01 Foundation Plan - Basement
S2.02 Foundation Plan - Level 1
S2.03 Level 2 PT Plan
S2.04 Level 2 Reinforcing Plan
S2.05 Level 3 PT Plan
S2.06 Level 3 Reinforcing Plan
S2.07 Shearwall and Holdown Plan
S2.08 Level 4 Floor Framing Plan
S2.09 Level 5 Floor Framing Plan
S2.10 Level 6 Floor Framing Plan
S2.11 Level 7 Floor Framing Plan
S2.12 Level 8 Floor Framing Plan
S2.13 Roof Framing Plan
S2.14 Upper Roof Framing Plan
S3.01 Elevations
S6.01 Concrete Details
S6.02 Column Sections and Details
S6.03 Concrete Details
S6.04 Concrete Wall Sections
S6.05 Concrete Wall Sections
S6.06 Concrete Wall Sections
S7.01 PT Details
S7.02 PT Details
S7.03 PT Details
S8.01 Typical Elevator Steel Details
S9.10 Wood Framing Details
S9.20 Wood Framing Details
S9.30 Wood Framing Details
S9.50 Wood & Steel Details

Mechanical,
M000 Legend, General & Drawing index
M001 Schedule & Calculations
M002 Calculations & Notes
M100 Site Plan
M200 Basement level floor plan
M201 Level 1 floor plan
M202 Level 2 floor plan
M203 Level 3 floor plan
M204 Level 4 floor plan
M205 Level 5 floor plan
M206 Level 6 floor plan
M207 Level 7 floor plan
M208 Level 8 floor plan
M209 Roof plan

TOTAL SHEETS: 92

LINK
LINK DESIGN GROUP LLC.
439 Kirkland Way
Kirkland, WA. US. 98033
+1.425.298.0080

602 Pengjiang RD, E461 ShangHai, China 200072
上海市静安区彭江路602号E座461室 邮编 200072
+86.21.6667.0228

Project No: Enter Client Supplied Number
XXXXXXXXXX

Client/Owner/Project Address

Owner
VIBRANT CITIES
606 Maynard Ave S
Suite 251
Seattle, WA 98104

Consultant

BLOSSOM APARTMENTS - COA SUBMITTAL

Issue Drawing Log

	09/04/20	INITIAL PRICING SET
	01/21/21	PERMIT SET SUBMITTAL
	03/05/21	COA SUBMITTAL

Professional Certification - I certify that these documents were prepared or approved by me, and that I am a duly licensed Architect under the laws of the state of Washington, License number _____, Expiration date _____.

8628 REGISTERED ARCHITECT
Jenny Li
JENNY LI
STATE OF WASHINGTON

SDCI APPROVAL STAMP

©LINK DESIGN GROUP LLC.
All rights reserved. No part of this document may be reproduced in any form or by any means without permission in writing from LINK DESIGN GROUP LLC.

PROJECT NUMBER	20-0108A
PROJECT MANAGER	JX
DRAWN BY	DS, MB

Sheet Identification

PROJECT DATA

G101.1

GENERAL NOTES

1. THE DRAWINGS, SPECIFICATIONS AND OTHER DOCUMENTS PREPARED BY THE ARCHITECT ARE INSTRUMENTS OF THE ARCHITECT'S SERVICE THROUGH WHICH THE WORK TO BE EXECUTED BY THE CONTRACTOR IS DESCRIBED. NEITHER THE CONTRACTOR NOR ANY SUBCONTRACTOR, SUB-SUBCONTRACTOR OR MATERIAL OR EQUIPMENT SUPPLIER SHALL OWN OR CLAIM A COPYRIGHT IN THE DRAWINGS, SPECIFICATIONS AND OTHER DOCUMENTS PREPARED BY THE ARCHITECT, AND UNLESS OTHERWISE INDICATED, THE ARCHITECT SHALL BE DEEMED THE AUTHOR OF THEM AND WILL RETAIN ALL COMMON LAW, STATUTORY AND OTHER RESERVED RIGHTS, IN ADDITION TO THE COPYRIGHT. THE DRAWINGS, SPECIFICATIONS, AND OTHER DOCUMENTS PREPARED BY THE ARCHITECT AND COPIES THEREOF FURNISHED TO THE CONTRACTOR, ARE FOR USE SOLELY WITH RESPECT TO THIS PROJECT. THEY ARE NOT TO BE USED BY THE CONTRACTOR OR ANY SUBCONTRACTOR, SUB-SUBCONTRACTOR OR MATERIAL OR EQUIPMENT SUPPLIER ON OTHER PROJECTS OR FOR ADDITIONS TO THIS PROJECT OUTSIDE THE SCOPE OF THE WORK WITHOUT THE SPECIFIC KNOWLEDGE OR WRITTEN CONSENT OF THE ARCHITECT.

2. THE ARCHITECT HAS AUTHORITY TO ACT ON BEHALF OF THE OWNER ONLY TO THE EXTENT PROVIDED IN THE CONTRACT DOCUMENTS. IN MATTERS WHERE THE ARCHITECT HAS NOT BEEN ENGAGED BY THE OWNER TO CONDUCT CONSTRUCTION ADMINISTRATION DUTIES, THE OWNER SHALL FULFILL THE ROLE OF THE ARCHITECT AND SHALL BE RESPONSIBLE FOR ENSURING FAITHFUL PERFORMANCE OF THE CONTRACTOR IN ACCORDANCE WITH THE CONTRACT DOCUMENTS.

3. THE ARCHITECT WILL NOT BE REQUIRED TO MAKE EXHAUSTIVE OR CONTINUOUS ON-SITE INSPECTIONS TO CHECK QUALITY OR QUANTITY OF THE WORK.

4. THE ARCHITECT WILL NOT HAVE CONTROL OVER OR CHARGE OF, AND WILL NOT BE RESPONSIBLE FOR CONSTRUCTION MEANS, METHODS, TECHNIQUES, AND SEQUENCES. THE CONTRACTOR SHALL BE SOLELY RESPONSIBLE FOR INITIATING, MAINTAINING AND SUPERVISING ALL SAFETY PRECAUTIONS AND PROGRAMS IN CONNECTION WITH THE PERFORMANCE OF THE CONTRACT.

5. ALL WORK BY ANY AND ALL DESIGN PROFESSIONALS SHALL BE COORDINATED, VERIFIED AND SUPERVISED BY THE CONTRACTOR. THIS INCLUDES BUT IS NOT LIMITED TO ALL WORK / DESIGN BY CIVIL, SOILS, LANDSCAPING, MECHANICAL, ELECTRICAL, FIRE PROTECTION/ SPRINKLER AS WELL AS AND INCLUDING ANY AND ALL GOVERNMENT AND LOCAL AGENCIES AS APPLICABLE.

6. EXECUTION OF THE CONTRACT BY THE CONTRACTOR IS A REPRESENTATION THE CONTRACTOR HAS VISITED THE SITE AND BECOME GENERALLY FAMILIAR WITH LOCAL CONDITIONS UNDER WHICH THE WORK IS TO BE PERFORMED AND CORRELATED PERSONAL OBSERVATIONS WITH REQUIREMENTS OF THE CONTRACT DOCUMENTS.

7. THE CONTRACTOR SHALL INSPECT PORTIONS OF WORK ALREADY PERFORMED UNDER THIS CONTRACT TO DETERMINE THAT SUCH PORTIONS ARE IN PROPER CONDITION TO RECEIVE SUBSEQUENT WORK. WHERE A COMPLEX ASSEMBLY INVOLVING SEVERAL TRADES IS CALLED FOR ON DRAWINGS, SUBMIT SHOP DRAWINGS SHOWING THE PROPOSED INTERACTION OF RELATED ELEMENTS FOR ARCHITECT'S REVIEW. THE CONTRACTOR IS RESPONSIBLE FOR PROPER OPERATION OF ALL SYSTEMS.

8. THE CONTRACTOR SHALL BE SOLELY RESPONSIBLE FOR INITIATING, MAINTAINING AND SUPERVISING ALL SAFETY PRECAUTIONS AND PROGRAMS IN CONNECTION WITH THE PERFORMANCE OF THE CONTRACT.

9. ALL WORK SHALL CONFORM TO APPLICABLE LOCAL, STATE AND FEDERAL CODES, ORDINANCES AND REQUIREMENTS. THE CONTRACTOR SHALL VERIFY AND COORDINATE THE SAME.

10. THE CONTRACTOR PRIOR TO COMMENCING WORK SHALL OBTAIN ALL REQUIRED APPROVALS AND PERMITS FROM APPLICABLE PUBLIC AGENCIES EXCEPT FOR BUILDING PERMIT WHICH OWNER IS RESPONSIBLE FOR OBTAINING.

11. THE CONTRACTOR PRIOR TO THE CONTINUANCE OF WORK FOR WORK PERFORMED SHALL OBTAIN ALL REQUIRED INSPECTIONS AND APPROVALS.

12. TRADE CONTRACTORS AND DELEGATED DESIGN-BUILD CONTRACTORS ARE RESPONSIBLE FOR THE LAYOUT THEIR OWN WORK, AND TO SEE THAT ITS WORK COMES TOGETHER WITH THAT OF OTHERS. REPORT DISCREPANCIES ON DRAWINGS TO THE ARCHITECT FOR DECISIONS.

13. TRADE CONTRACTORS AND DELEGATED DESIGN-BUILD CONTRACTORS ARE RESPONSIBLE FOR ACQUIRING THE LATEST DRAWINGS ISSUED FOR CONSTRUCTION IN THE CONTRACTOR'S SITE OFFICES.

14. ALL SHOP DRAWINGS FOR MATERIALS, FABRICATION, AND INSTALLATION OF MATERIALS, EQUIPMENT, AND SYSTEMS SHALL BE SUBMITTED TO THE ARCHITECT FOR APPROVAL PRIOR TO FABRICATION OR INSTALLATION.

15. ALL WORK SHALL BE PERFORMED IN A TIMELY AND PROFESSIONAL MANNER AND SHALL BE COORDINATED WITH WORK BY ANY AND ALL OTHER CONTRACTORS.

16. ALL MATERIALS AND EQUIPMENT FURNISHED ON THE PROJECT SHALL BE OF GOOD QUALITY AND NEW UNLESS OTHERWISE REQUIRED OR PERMITTED BY THE CONTRACT DOCUMENTS. THE WORK WILL BE FREE FROM DEFECTS NOT INHERENT IN THE QUALITY REQUIRED OR PERMITTED AND THE WORK WILL CONFORM TO THE REQUIREMENTS OF THE CONTRACT DOCUMENTS. WORK NOT CONFORMING TO THESE REQUIREMENTS, INCLUDING SUBSTITUTIONS NOT PROPERLY APPROVED AND AUTHORIZED BY THE ARCHITECT, MAY BE CONSIDERED DEFECTIVE.

17. THE CONTRACTOR SHALL BE RESPONSIBLE FOR CUTTING, FITTING OR PATCHING REQUIRED TO COMPLETE THE WORK OR TO MAKE ITS PARTS FIT TOGETHER PROPERLY.

18. ALL DAMAGE TO MATERIALS AND EQUIPMENT WHETHER IN STORAGE ON OR OFF THE SITE, OR OTHER DAMAGE TO THE WORK CAUSED BY CONSTRUCTION ACTIVITIES ARE THE RESPONSIBILITY OF THE CONTRACTOR AND SHALL BE MADE AS NEW BY THE CONTRACTOR.

19. ALL OFF SITE LIABILITY INCURRED BY THE CONTRACTOR, SUBCONTRACTOR, SUB-SUBCONTRACTOR, EMPLOYEES, VENDORS OR THEIR AGENTS SHALL BE THE SOLE AND SINGULAR RESPONSIBILITY OF THE CONTRACTOR.

20. ALL CHANGES AND MODIFICATIONS TO BE APPROVED BY THE ARCHITECT PRIOR TO CONSTRUCTION.

21. DO NOT SCALE DRAWINGS. DIMENSIONS GOVERN. CONSULT ARCHITECT FOR DIMENSIONAL CLARIFICATION IF NEEDED. CAREFULLY REVIEW DIMENSIONS INDICATED ON DRAWINGS AS WELL AS SITE CONDITIONS. NOTIFY ARCHITECT IMMEDIATELY OF CONFLICTS OR DISCREPANCIES PRIOR TO CONSTRUCTING THE WORK.

21A. INFORMATION REGARDING EXISTING CONDITIONS USED TO PREPARE THESE DRAWINGS HAS BEEN PROVIDED BY OTHERS. CONTRACTOR TO FIELD VERIFY EXISTING CONDITIONS PRIOR TO COMMENCING CONSTRUCTION. PROVIDE WRITTEN NOTIFICATION TO THE ARCHITECT OF ANY DISCREPANCIES BETWEEN EXISTING CONDITIONS & THE DRAWINGS. THE ARCHITECT WILL ISSUE A WRITTEN DIRECTIVE IF FURTHER CLARIFICATION IS REQUIRED.

21B. THE DRAWINGS ARE FOR SHELL AND CORE INFORMATION. INTERIORS TO BE PROVIDED BY OTHERS.

22. HORIZONTAL DIMENSIONS ARE TO BUILDING GRID LINES, OR FACE OF STRUCTURE, OR FACE OF STUD UNLESS NOTED OTHERWISE.

23. HORIZONTAL CLEAR DIMENSIONS ARE TO FACE OF FINISHED WALL UNLESS NOTED OTHERWISE.

23A. "M.O." ON A DIMENSION LINE INDICATES "MASONRY OPENING" W/ DIMENSION POINTS TO THE CENTERLINE OF IMPLIED MASONRY JOINT, NOT TO THE FACE OF THE MASONRY UNIT. THIS MODULAR DIMENSIONING SYSTEM IS BASED ON THE NOMINAL SIZE(S) OF THE MASONRY UNITS INDICATED. VERIFY ACTUAL OPENING SIZE IN THE FIELD.

24. HEIGHTS ARE DIMENSIONED FROM TOP OF SLAB IN CONCRETE CONSTRUCTION UNLESS NOTED OTHERWISE. VERIFY SLAB CONDITIONS.

25. GLAZING SYSTEM DIMENSIONS ARE TO CENTER OF MULLION UNLESS NOTED OTHERWISE. VERIFY AS-BUILT ROUGH OPENINGS PRIOR TO ORDERING WINDOWS.

26. DOORS AND CASED OPENINGS INDICATED ADJACENT TO WALL INTERSECTIONS SHALL BE LOCATED WITH THE EDGE OF FINISH OPENING FOUR INCHES FROM THE ADJACENT WALL UNLESS OTHERWISE INDICATED. ALL OTHER DOORS AND CASED OPENINGS SHALL BE CENTERED BETWEEN NEAREST ADJACENT WALL INTERSECTIONS, UNLESS OTHERWISE DIMENSIONED.

27. 'ALIGN' MEANS TO ACCURATELY LOCATE FINISHED FACES IN SAME PLANE.

28. THE CONTRACT DOCUMENTS ARE COMPLIMENTARY DOCUMENTS USED BY THE ARCHITECT TO DESCRIBE THE BUILDING PROJECT AND BY THE CONTRACTOR TO DEVELOP AN UNDERSTANDING OF THE ARCHITECT'S INTENT AND WHAT IS REQUIRED BY ONE SHALL BE AS BINDING AS IF REQUIRED BY ALL. THE CONTRACT DOCUMENTS INCLUDE, BUT ARE NOT LIMITED TO, THE PROJECT MANUAL AND THESE DRAWINGS. REPORT DISCREPANCIES, ERRORS, OMISSIONS, OR INCONSISTENCIES DISCOVERED BY THE CONTRACTOR PROMPTLY TO ARCHITECT AS A REQUEST FOR INTERPRETATION (RFI).

29. DRAWINGS OF LARGER SCALE SHALL GOVERN OVER THOSE OF SMALLER SCALE OF THE SAME DATE.

30. DIMENSIONS SHOWN IN DRAWINGS SHALL GOVERN OVER DIMENSIONS SCALED FROM DRAWINGS.

31. LATER DATED DOCUMENTS SHALL GOVERN OVER EARLIER DOCUMENTS OF THE SAME TYPE.

32. STRUCTURAL DRAWINGS GOVERN OVER ARCHITECTURAL IN MATTERS OF STRUCTURAL DESIGN.

33. NOTIFY ARCHITECT IF BUILDING CODE REQUIREMENTS CONFLICT WITH OTHER PROJECT REQUIREMENTS.

34. WHEN CONSTRUCTION DETAILS ARE NOT SHOWN OR NOTED FOR PARTS OF THE WORK, DETAILS SHALL BE THE SAME AS FOR OTHER SIMILAR WORK. IF QUESTIONS CANNOT BE RESOLVED IN THIS MANNER, CONTACT THE ARCHITECT PRIOR TO PROCEEDING.

35. REPETITIVE FEATURES NOT SHOWN IN DRAWINGS SHALL BE COMPLETELY PROVIDED AS IF DRAWN IN FULL.

36. ALL MECHANICAL DUCTWORK, EQUIPMENT AND OTHER COMPONENTS SHOWN FOR REFERENCE ONLY AND SUBJECT TO CHANGE.

37. PRIOR TO ORDERING MATERIALS FOR EACH PORTION OF THE WORK, INVESTIGATE AND VERIFY SITE CONDITIONS AND DIMENSIONS TO ASCERTAIN THAT WORK IS FEASIBLE AS SHOWN. IMMEDIATELY NOTIFY ARCHITECT OF ISSUES WITH SITE CONDITIONS.

38. COORDINATE SIZES AND LOCATIONS OF FLOOR AND WALL OPENINGS, PENETRATIONS AND SLEEVE LOCATIONS FOR WORK PRIOR TO CONSTRUCTION, INCLUDING BUT NOT LIMITED TO MECHANICAL, PLUMBING AND ELECTRICAL WORK.

39. PLUMBING, FIRE PROTECTION, HVAC AND ELECTRICAL SYSTEMS ARE DELEGATED BIDDER-DESIGNED SYSTEMS. OBTAIN REQUIRED SEPARATE CONSTRUCTION PERMITS FOR EACH SYSTEM. COORDINATE DESIGN AND INSTALLATION OF DELEGATED BIDDER-DESIGNED SYSTEMS.

40. PROVIDE A WEATHER-TIGHT AND WATERPROOFED BUILDING ENVELOPE COMPLETE WITH REQUIRED AIR BARRIERS, WEATHER BARRIERS, FLASHINGS, SEALANTS, WATERPROOF MEMBRANES, ROOFING MEMBRANE AND EXTERIOR CLADDING IN ACCORDANCE WITH THE CONTRACT DOCUMENTS, BUILDING CODE, INDUSTRY STANDARDS, MANUFACTURER SPECIFICATIONS AND THE REQUIREMENTS OF THE OWNER'S BUILDING ENVELOPE CONSULTANT.

41. INSTALL FIRE EXTINGUISHERS, STANDPIPES AND CONNECTIONS AT LOCATIONS INDICATED UNLESS OTHERWISE REQUIRED BY LOCAL BUILDING INSPECTION JURISDICTION OR FIRE DEPARTMENT. PROMPTLY NOTIFY THE ARCHITECT AND OWNER IN WRITING IN THE EVENT INDICATED LOCATIONS ARE UNACCEPTABLE TO THE LOCAL BUILDING INSPECTION JURISDICTION OR FIRE DEPARTMENT.

42. INSTALL FIRE STOPPING IN STRICT ACCORDANCE WITH LOCAL AUTHORITY HAVING JURISDICTION SEATTLE BUILDING CODE, DOCUMENTED AND FIRE TESTED WALL, FLOOR/CEILING OR ROOF/CEILING ASSEMBLIES AND IN PRECISE ACCORDANCE WITH MANUFACTURER'S SPECIFICATIONS AND REQUIREMENTS.

43. DRAWINGS HAVE BEEN PREPARED ON AN ORIGINAL SHEET SIZE OF 30" X 42"

FIRE SUPPRESSION NOTES

1. SUBMIT SHOP DRAWINGS FOR THE FOLLOWING FIRE PROTECTION SYSTEMS TO THE CITY OF SEATTLE FOR PLAN APPROVAL PRIOR TO INSTALLATION: AUTOMATIC SPRINKLER - PLANS SHALL INCLUDE WATER SUPPLY INFORMATION, FIRE ALARM & FIRE STOP PROGRAM.
2. AUTOMATIC SPRINKLER SYSTEM TO BE MONITORED BY AN APPROVED CENTRAL STATION SERVICE. DESIGN AND INSTALL IN ACCORDANCE WITH NFPA 13 (STANDARD 9-1)
3. PROVIDE FIRE ALARM SYSTEM THAT MEETS NFPA 72, IFC SECTION 907 AND CITY OF SEATTLE, INCLUDING ZONING OF INITIATING DEVICES BY FLOOR, LOCATION OF THE CONTROL PANEL OR REMOTE ANNUNCIATOR AT THE MAIN BUILDING ENTRANCE, SMOKE DETECTION IN RESIDENTIAL CORRIDORS, AUDIBILITY OF 15 DBA ABOVE AMBIENT SOUND LEVELS OR 75 DBA MIN. THROUGHOUT ALL NORMALLY OCCUPIED AREAS AND 70 DBA MIN AT ANY POINT IN BEDROOMS WITH DOOR CLOSED, VISUAL ALARMS IN COMMON-USE AREAS AS REQUIRED BY CITY OF SEATTLE, ELEVATOR RECALL, AND CONNECTION OF SPRINKLER WATER FLOW AND VALVE TAMPER INDICATORS.
4. PROVIDE A CLASS 2A FIRE EXTINGUISHER WITH RECESSED CABINET FOR EVERY 6,000 SF. MAX TRAVEL DISTANCE TO FIRE EXTINGUISHER CABINETS TO BE 75' WITHIN ALL AREAS AND FROM UNIT ENTRY DOORS. WRAP OPENING WITH GWB TO MAINTAIN FIRE RATING OF WALL.
5. PROVIDE BUILDING RADIO COVERAGE PER CITY CODE.
6. CONTRACTOR MATERIALS AND ACTIVITIES SHALL NOT BLOCK ANY EXIT OR IMPAIR FLOOR TO FLOOR FIRE SEPARATION WHILE THE BUILDING IS OCCUPIED.
7. STANDBY POWER TO BE PROVIDED TO THE STAIR SHAFT PRESSURIZATION SYSTEMS BY TAP ON MAIN.
8. CONTRACTOR TO SUBMIT DETAILS OF FIRE CONTROL ROOM TO THE CITY OF SEATTLE WITH FIRE SPRINKLER SUBMITTAL.

LOW VOLTAGE NOTES

1. THE TWO-WAY COMMUNICATION SYSTEM SHALL PROVIDE COMMUNICATION BETWEEN EACH REQUIRED LOCATION AND THE FIRE CONTROL ROOM PER SBC 1007.8.
2. THE TWO-WAY COMMUNICATION SYSTEM SHALL HAVE A TIMED AUTOMATIC TELEPHONE DIAL-OUT CAPABILITY TO A MONITORING LOCATION OR 911.
3. THE TWO-WAY COMMUNICATION SYSTEM SHALL INCLUDE BOTH AUDIBLE VISUAL SIGNALS.
4. DIRECTIONS FOR THE USE OF THE TWO-WAY COMMUNICATION SYSTEM, INSTRUCTIONS FOR SUMMONING ASSISTANCE VIA THE TWO-WAY COMMUNICATION SYSTEM, AND WRITTEN IDENTIFICATION OF THE LOCATION SHALL BE POSTED ADJACENT TO THE TWO-WAY COMMUNICATION SYSTEM.
5. ALL DOORS NOTED AS "CARD READER", "TELEPHONE ENTRY SYSTEM", AND "ELECTRONIC STRIKE" SHALL BE UNLOCKED IN THE DIRECTION OF EGRESS TRAVEL AT ALL TIMES.
6. ACTIVATION OF THE BUILDING FIRE ALARM SYSTEM, BUILDING SPRINKLER SYSTEM, OR FIRE DETECTION SYSTEM SHALL AUTOMATICALLY UNLOCK THE DOORS NOTED ON THE DOOR SCHEDULE AS "CARD READER", "TELEPHONE ENTRY SYSTEM" AND "ELECTRONIC STRIKE". THESE DOORS SHALL REMAIN UNLOCKED UNTIL THE FIRE ALARM SYSTEM HAS BEEN RESET

OCCUPANCY VENTILATION NOTES

1. RESIDENTIAL: PROVIDE NATURAL VENTILATION AT HABITABLE ROOMS BY MEANS OF OPENABLE EXT. OPENINGS WITH AN AREA NOT LESS THAN 1/20TH OF THE FLOOR AREA WITH A MINIMUM SIZE AS REQUIRED BY CODE OR MECHANICAL VENT NOTED IN THIS SECTION.
2. EXHAUST FANS: DUCTS TO TERMINATE OUTSIDE THE BUILDING WITH BACKDRAFT DAMPERS.
3. EACH UNIT SHALL HAVE A WHOLE HOUSE VENTILATION FAN.
4. EACH UNIT SHALL HAVE WINDOW PORTS TO PROVIDE OUTDOOR AIR IN ACCORDANCE WITH IMC WASHINGTON STATE AMENDMENTS. CONTRACTOR TO PROVIDE CALCULATE REQUIRED NUMBER AND LOCATION OF WINDOW PORTS IN CONJUNCTION WITH WINDOW PROVIDER AND MECHANICAL ENGINEER.

LINK
LINK DESIGN GROUP LLC.
439 Kirkland Way
Kirkland, WA. US. 98033
+1.425.298.0080

602 Pengjiang RD, E461 ShangHai, China 200072
上海市静安区彭江路602号E座461室 邮编 200072
+86.21.6667.0228

Project No: Enter Client Supplied Number
XXXXXXXXXX

Client/Owner/Project Address

Owner
VIBRANT CITIES
606 Maynard Ave S
Suite 251
Seattle, WA 98104

Consultant

BLOSSOM APARTMENTS - COA SUBMITTAL

Issue Drawing Log

	09/04/20	INITIAL PRICING SET
	01/21/21	PERMIT SET SUBMITTAL
	03/05/21	COA SUBMITTAL

Professional Certification - I certify that these documents were prepared or approved by me, and that i am a duly licensed Architect under the laws of the state of Washington, License number _____, Expiration date _____.

8628 REGISTERED ARCHITECT
Jenny Li
JENNY LI
STATE OF WASHINGTON

SDCI APPROVAL STAMP

©LINK DESIGN GROUP LLC.
All rights reserved. No part of this document may be reproduced in any form or by any means without permission in writing from LINK DESIGN GROUP LLC.

PROJECT NUMBER	20-0108A
PROJECT MANAGER	JX
DRAWN BY	DS, MB

Sheet Identification

GENERAL NOTES

G102

LINK DESIGN GROUP LLC

3036319-LU / 214 5TH AVE - PRE-SUBMITTAL CONFERENCE MEETING MINUTES

APPROVED PRESUB NOTES HJG 10-15-2020

Project: Blossom Apartments	Date: 6/10/2020	Time: 9:00-10:30 am
Project #: 18-0601A	Location: MS Teams	
Meeting No. 01		
Prepared by Stuart Hand, Link Design Group		

Attendees:
Rebecca Frestedt rebecca.frestedt@seattle.gov
Angela Wallis angela.wallis@seattle.gov
Holly Godard holly.godard@seattle.gov
Gerald Buker gerald.buker@seattle.gov
Ray Ramos ray.ramos@seattle.gov
Jonathan Williams Jonathan.williams@seattle.gov
Stuart Hand Stuart.Hand@linkdesigngroup.com
Mira Tihova Mira.Tihova@linkdesigngroup.com
Gary Wakatsuki gary.wakatsuki@linkdesigngroup.com
Han Beh Han.Beh@linkdesigngroup.com
Scott Douglas scott.douglas@linkdesigngroup.com
Jason Xu jason.xu@linkdesigngroup.com
Ming Fung mfung@vibrantcities.com
Jodi Patterson-O'Hare jodi@permitcnw.com

ITEM	DESCRIPTION
1	**Project Overview and Introductions (Gary Wakatsuki)** **1)** Gary Wakatsuki of Link Design Group presented an overview of the site and project massing.(See attached drawings)
2	**SPU and Solid Waste (Angela Wallis)** 1) The slope of the site will be a considerable challenge regarding solid waste pick up. 2) Per Land Use Code and safety standards, the service provider cannot service 2yd or smaller, uncompacted containers on more than a 6 percent grade; any container with compacted materials must be serviced from level grade. 3) On site roll off containers are the preferred method for storage to reduce the cost of waste pickup over the life of the building.

LINK DESIGN GROUP LLC

	4) 14'-0" is the required clearance for garage for a roll off container and truck access. 5) Angela's functional recommendation was that garbage trucks will need to pull headfirst into the alley, back into the garage, and pull headfirst onto S Main Street. It is not acceptable for garbage trucks to back up into South Main Street. Currently, Angela does not see another viable option for solid waste pick up 6) Angela directed the team to refer to the Seattle Public Utilities website, 'Solid Waste for Developers', for further design guidance.
3	**City Light (Ray Ramos)** 1) The power pole located on the southeast corner of the site may be going away at some point in the future as other new projects come on line. It was noted that there may be a franchise utility also on the pole and they will need to be contacted as well as part of the removal. Currently, there are overhead high voltage lines along both 5th Ave S & S Main St; there is a plan for removal; the project must work with SCL Engineering for the latest update on scheduling of that work; depending on or until removed, 14-ft clearance is required from the nearest high voltage line. 2) It was unknown if steam is still being utilized in the area. 3) The service will be within Seattle City Light's network system and the standards for such will be followed. SCL Standard 0751.00 is for in-building vaults 4) Building power may be sufficient to be pulled from the existing alley vault but will need to be evaluated after application to SCL. 5) It was recommended that the team reach out to the Seattle City Service Rep and Engineering team to get more feedback as to the future for the area and submit an application for service. SCL ESR contact: Bill Danbom, 206-386-1797, bill.danbom@seattle.gov; link to SCL application which includes additional links to SCL Standards and Requirements: http://www.seattle.gov/light/electricservice/application.asp 6) This project will most likely require a full SIP process. As such, SCL information obtained through SCL Engineering should be included in the SIP plans as it is beneficial to all parties involved. 7) The size of the transformer in-building vault can be provided by Seattle City Light once the load and service size have been determined. 8) The street light pole (pedestrian lighting) standards are specific to the ISRD and will be utilized. 9)
4	**SDOT (Jonathan Williams)** 1) Jonathan mentioned that ISRD Board ultimately approves changes to the right of way and that SDOT works in collaboration with the board. The ISRD does

LINK DESIGN GROUP LLC

	not have prescriptive widths of sidewalks. Jonathan referred the team to Map 1c in section 23.49 of the SMC which calls for 12' minimum on all downtown zone streets from face of curb to back of sidewalk Standards call out street trees in a 5.5' area at the curb with a minimum 6' clear sidewalk. Wider sidewalks are recommended on 5th Ave S due to pedestrian volume and align with plans to the north. 2) It was recommended to keep Rebecca Frestedt in the loop as to decisions that are being made during the SIP process. 3) Jonathan recommended that the sidewalk width on S 5th Ave work in conjunction with the project planned directly to the north. 4) The curb ramps must be upgraded to ADA standard. Improved crosswalks must have companion/receiving ramps that meet SDOT's companion ramp standards/ 5) There are currently brick pavers on the site in the ROW. SDOT prefers to have typical standards in the ROW and Rebecca mentioned that the Board prefers a continuity of paving within all four corners of an intersection. Typically, preservation of pavers where they exist is preferred. The Board will look at individual intersections on a case-by-case basis. Stuart Hand mentioned that owner/city maintenance agreements are often required for non-standard paving/patterns w/ in the right of way. If the ISRD Board recommends that bricks or other paving be utilized in the right of way, is such an agreement still required? 6) SDOT did not have any comments in relation to the proximity of the alley garage entrance to South Main Street. However, it was noted that the ISRD Board may have comments due to the proximity to the Green Street and potential conflicts with pedestrian traffic. 7) SDOT does not want vehicles backing out onto S Main Street via the alley. 8) A vehicle turn-around or through connection to S Washington Street for the alley is not required by the land use code because S Main St is not designated as an arterial.
5	**Land Use & Zoning (Gerald Buker, SDCI zoning; Rebecca Frestedt, DON and Holly Godard, SDCI land use planner)** **Land Use & Zoning (Gerald Buker and Rebecca Frestedt)** 1) Green Street Departure Request – The departure request to eliminate the required set back on the east wing of the building is not listed in the non-departable requests as outlined in SMC 23.41.012.B. Unless specifically stated in this code section, a departure request can be sought.

LINK DESIGN GROUP LLC

	2) Gary Wakatsuki of LINK design group inquired about the process of community outreach given the state of the community during the Covid response. Rebecca suggested to reach out to the community stakeholders to advise on how to approach the community about feedback. Are there specific individuals or groups within the ISRD that you recommend reaching out to? (Rebecca will email an initial list of community stakeholders and contact info to design team.) From RF: The ISRD Board has not been able to meet in person since March and at the time we didn't have a mechanism to meet remotely. The Council passed emergency legislation that allows Historic Preservation Program staff to administratively review small applications for things like changes of use, minor exterior alterations and signage. Administrative review does not include proposed demolition or new construction projects. At this time we are not scheduling project briefings. We are still working on developing a language access plan for bigger projects. In the meantime, applicants are able to submit applications for Certificates of Approval so that they're in the project queue. Those can be submitted via Accela as of about two weeks ago. (Early October 2020) From GB: I spoke with Scott Ringgold about this question. We are fine taking it in and worrying about the CofA and DON/ISRD process during correction rounds. That said, we are not process experts, the applicant may want to touch base with DON to ensure they are on board. From HG: zone is IDR 45/125-270. Main is a green street 5th is a Class I Pedestrian street 205 units proposed SEPA threshold is 250 Approx. 3,000 sf commercial (restaurant) sepa threshold is 12,000/30,000 Does not appear to meet SEPA thresholds for review. 23.66.318 dev. Standards Rebecca will review. Cert. of approval required for all projects after Board reviews are complete. No admin review is available, so project will wait until meetings resume. Reference code sections: SMC 23.53.035B Alley regulations 23.66.302 IDR development standards SMC 23.66.306 Special Objectives A-E SMC 23.66.312 Special Review Board
6	Other 1) Jodi Patterson-O'Hare will be the primary point of contact for the city as the applicant.

LINK DESIGN GROUP LLC

Approved Subject to Errors & Omissions

Digitally signed by Cornell Burt, P.E.
Date: 2020.07.23 20:08:48-07'00'

6777621-CN / 214 5TH AVE - PRE-SUBMITTAL CONFERENCE MEETING MINUTES

Project: Blossom Apartments	Date: 6/18/2020	Time: 1:00-2:30 mm
Project #: 18-0601A	Location: MS Teams	
Meeting No. 01		
Prepared by Scott Douglas, Link Design Group		
Distributed to Attendees: Blossom Team + Cornell Burt (CB) SDCI and Shawn **Shepherd (SAS/SFD 7/20/20)** ~~Shepard~~ (SS) Seattle Fire Dept.		

ITEM	ISSUED DISCUSSED	UNDERSTOOD RESOLUTION
1	**Termination of Fire Separation walls at roof**	CB indicated that fire walls are required to extend 30 inches above roof. However, subject to exceptions in SBC 706.6 2-hour firewalls may terminate below roof sheathing. ***SDCI: Correct. BURT 7-7-20***
2	**Interpretation of allowable unprotected openings (window glazing) for our project**	CB determined that since our opposing units, separated by 14 feet, are within the same building, that our percentage of unprotected openings is 'unlimited'. During meeting CB had Amy Barnett also confirm this. ***SDCI: Correct. BURT 7-7-20***
3	**Mezzanines in Type III B Residential Buildings**	Occupiable mezzanine levels are not allowed on any floors but storage levels above sleeping/bathrooms are acceptable provided they do not exceed 70 sf. ***SDCI: Correct, subject to requirements of SBC 510.10. BURT 7-7-20***
4	**75-foot measurement for highrise determination**	SS indicated that our project should use the 'sliding ladder' form of measurement from 5th Ave. South. This means we are to use a perpendicular line (E/W Direction) across 5th for our datum to measure 75 feet. This means measuring from the lowest point at any point along the sliding ladder line. **Update:** Per email correspondence that occurred between 6/18 and 7/1, SS confirmed that a slightly different method of measurement, shown in the attachments with these minutes, confirms that our building will NOT be considered a high-rise building. In short, if we don't exceed 75 feet from the gutter elevations directly adjacent to our property, and directly below our 8th floor, SFD will not view our design a high-rise building. **SAS/SFD RESPONSE: The building is**

LINK DESIGN GROUP LLC

		not a high-rise per the provided plans provided in the 7/2 email from Scott Douglas and the roof occupant load is less than 50. SAS/SFD 7/20/20
5	**Rating of Wall construction at north property line**	Scott Douglas asked if any wall construction was required to exceed a 2-hour rating, including our north wall within 9" of line. CB mentioned that no wall construction in our building is required to exceed 2-hour construction. ***SDCI: Walls of Type III construction will not require a rating of 3 hours, whereas Walls of Type IA construction will require a 3 hour rating per SBC Tables 601 and 602. BURT 7-7-20***
6	**Exterior wall construction on either side of firewall termination**	CB indicated that unprotected openings are required to be no closer than 4 feet on either side of firewall termination, unless a 3/4 Hr. rated glazing system is being used within the 4-foot dimension. See SBC 706.5.2 ***SDCI: SBC 706.5.1 includes requirements for termination of fire walls at exterior wall intersections. Imaginary lines can be drawn such that each opening meets the requirements of 705.5 and 705.8 relative to that line. BURT 7-7-20***
7	**Efficient Dwelling Unit vs. Small EDU**	It was confirmed that Blossom is NOT planning to be a SEDU as described in DR 9-2017 ***SDCI: Noted. BURT 7-7-20***
9	**Fire Department roof access**	SS stated that both stairs must extend to the roof. **SAS/SFD RESPONSE: As the building is not considered a high-rise, at least one stairway shall terminate on the roof level per 10.11.12. SAS/SFD/ 7/20/20**
10	**Roof Amenity Area**	Provided that our roof elevator vestibule is only large enough to meet mechanical needs (i.e. not including room for furniture) we can have 750 sf of exterior amenity area – not including landscaped area - as long as we don't exceed an occupancy of 50 people. ***SDCI: Excessively wide walkways may be considered as occupied depending on the layout, and this area may increast the occupant load on the roof, which could require compliance with SBC 403 (high-rise). BURT 7-7-20 Subsequent discussion confirms that the building as proposed is NOT designated a high rise. Note that since the roof occupant load exceeds 10, both stairs shall extend to the roof as exits to comply with SBC section 1006.3.2 (item 6). BURT 7-23-20***
11	**Means of egress – Direction of door swing regarding interior door(s) at firewall separating floor plate into areas less than 12,000 sf.**	Per SBC section 1010.1.2.1 – Since our occupant load on either side of our firewall will be less than 50 people (approx. 6800 sf at east and west sides) we will only be required to have one swing door with no specified/required door swing direction. ***SDCI: Correct in general, but no specific plan reference included herein. BURT 7-7-20***
12	**END**	**END**

LINK
LINK DESIGN GROUP LLC.
439 Kirkland Way
Kirkland, WA. US. 98033
+1.425.298.0080

602 Pengjiang RD, E461 ShangHai, China 200072
上海市静安区彭江路602号E座461室 邮编 200072
+86.21.6667.0228
Project No: Enter Client Supplied Number
XXXXXXXXXX

Client/Owner/Project Address

Owner
VIBRANT CITIES
606 Maynard Ave S
Suite 251
Seattle, WA 98104

Consultant

BLOSSOM APARTMENTS - COA SUBMITTAL

Issue Drawing Log

	09/04/20	INITIAL PRICING SET
	01/21/21	PERMIT SET SUBMITTAL
	03/05/21	COA SUBMITTAL

Professional Certification - I certify that these documents were prepared or approved by me, and that I am a duly licensed Architect under the laws of the state of Washington, License number _____, Expiration date _____.

8628 REGISTERED ARCHITECT
JENNY LI
STATE OF WASHINGTON

SDCI APPROVAL STAMP

©LINK DESIGN GROUP LLC.
All rights reserved. No part of this document may be reproduced in any form or by any means without permission in writing from LINK DESIGN GROUP LLC.

PROJECT NUMBER	20-0108A
PROJECT MANAGER	JX
DRAWN BY	DS, MB

Sheet Identification

LAND USE PRE-SUBMITTAL MEETING MINUTES

G103

ZONING CODE SUMMARY

1. Floor area ratio
SMC 23.49.011 Table A
Base FAR = 1.5
Maximum = 2, if 50 percent or more of the total gross floor area on the lot is in residential use
SMC 23.49.011 B
Exemptions and deductions from FAR calculations:
1. b.Street-level uses meeting the requirements of Section 23.49.009.
f.Residential use
k.Floor area below grade
*l.*Floor area that is used only for:1)*Short-term parking or parking accessory to residential uses*, or both, subject to a limit on floor area used wholly or in part as parking accessory to residential uses of one parking space for each dwelling unit on the lot with the residential use served by the parking;
*y.*The floor area of required bicycle parking for small efficiency dwelling units or congregate residence sleeping rooms.
2.Mechanical equipment
a.As an allowance for mechanical equipment fully contained within a structure, three and one-half percent shall be deducted in computing chargeable gross floor area. Calculation of the allowance excludes gross floor area exempt pursuant to subsection 23.49.011.B.1.
b.Mechanical equipment located on the roof of a structure shall not be calculated as part of the total gross floor area of the structure.

2. Structure Height
SMC 23.49.236
B. the applicable height limits in an IDR zone are determined as set forth in this subsection 23.49.236.B:
1.Where there are multiple height limits listed, the applicable height limit for structures containing only nonresidential and live-work uses is the first figure after the "IDR" designation, and is the height limit for all portions of a structure that contain those uses. *The base height limit for portions of a structure that contain residential use, shown as the first figure following the "/", is the applicable residential height limit for portions of a structure that contain residential uses if the structure does not qualify for extra floor area under Section 23.49.023.* The third figure shown, if any, is the applicable height limit for portions of a structure that contain residential uses if the structure qualifies for extra residential floor area under Section 23.49.023.
SMC 23.86.006.E
3.The maximum height shall be measured as follows:
a.When the slope of the major street lot line is less than or equal to 7.5 percent, the elevation of maximum height shall be determined by adding the maximum permitted height to the existing grade elevation at the midpoint of the major street lot line.
b.When the slope of the major street lot line exceeds 7.5 percent, the major street lot line shall be divided into four or fewer equal segments no longer than 120 feet in length. The elevation of maximum height shall be determined by adding the maximum permitted height to the existing grade elevation at the midpoint of each segment.
SMC 23.66.332.B
B.Rooftop features
3.Open railings, planters, clerestories, skylights, play equipment, parapets and firewalls may extend up to 4 feet above the maximum height limit and may have unlimited rooftop coverage.
4.Solar collectors excluding greenhouses may extend up to 7 feet above the maximum height limit and may have unlimited rooftop coverage.
5.The following rooftop features may extend up to 15 feet above the maximum height limit provided that the combined coverage of all features listed below does not exceed 15 percent of the roof area: a.Solar collectors, excluding greenhouses; b.Mechanical equipment that is set back at least 15 feet from the roof edge; c.Minor communication utilities and accessory communication devices
6.Stair and elevator penthouses may extend above the applicable height limit up to 15 feet provided that the combined rooftop coverage of stair and elevator penthouses and all features listed in subsection 23.66.332.B.5 does not exceed 15 percent of the roof area.

3. IDR development standards
SMC 23.49.242
B.Minimum lot size requirement.
The minimum lot size is 21,000 square feet for any structure exceeding a height of 170 feet excluding rooftop features.
C.Coverage limits
1.Upper-level coverage limits do not apply to structures 85 feet in height or less excluding rooftop features on lots of 8,000 square feet or less in IDR zones.
2.For structures 170 feet in height or less:
65 feet or less No limit
Greater than 65 feet up to 125 feet 75% of lot area
Greater than 125 feet up to 170 feet 65% of lot area
D.Setbacks
1.a. In an IDR zone, a continuous upper-level setback of 15 feet is required from the green street lot line for all portions of the structure above 45 feet in height. This setback is not required if a structure is 65 feet in height or less, except on Maynard Avenue S.
2.For a structure exceeding 85 feet in height excluding rooftop features, a continuous upper-level setback of 15 feet is required from each side lot line that is not a street or alley lot line for all portions of the structure above a height of 65 feet.
E.Facade modulation
1.For structures 170 feet or less in height excluding rooftop features, modulation is required for the portion of a street-facing facade above 65 feet in height and located less than 15 feet from street lot lines. No modulation is required for portions of a facade set back 15 feet or more from street lot lines.
65 feet in height or less: No limit
Greater than 65 feet up to 125 feet: 155 feet

4. Parking and access
SMC 23.49.019
A.Parking quantity requirements
1.No parking, either long-term or short-term, is required for uses on lots in Downtown zones, except as follows:
a.In the International District Mixed and International District Residential zones, ***parking requirements for restaurants, motion picture theaters, and other entertainment uses*** are as prescribed by Section 23.66.342.
c.***Bicycle parking*** is required as specified in subsection 23.54.015.K.
SMC 23.66.342
restaurants shall be required to provide one space per 500 square feet for all gross floor area in excess of 2,500 square feet; motion picture theaters shall be required to provide one space per 15 seats for all seats in excess of 150; and other entertainment uses shall be required to provide one space per 400 square feet for all gross floor area in excess of 2,500 square feet.
SMC 23.66.342.D
1.Access to parking shall be reviewed by the Board on a case-by-case basis, according to the following criteria: ***a. Alley access is preferred.*** b. Conflicts with pedestrian traffic, with efforts to provide continuous street facades, and with transit access shall be minimized.
2.The number and width of curbcuts shall be as required in Section 23.54.030.
4.The Board may recommend, and the Department of Neighborhoods Director may require, changes to proposed access to parking in order to meet the criteria of this Section 23.66.342.
SMC 23.54.015.K. table D
Bicycle parking:
Multi-family structures: 1 per dwelling unit and 1 per small efficiency dwelling unit
Sales and services, general: 1 per 4,000 square feet for long term; 1 per 2,000 square feet for short term
Eating and drinking establishments: 1 per 5,000 square feet for long term; 1 per 1,000 square feet for short term

5. Permitted uses
All uses permitted with exception of those specifically prohibited by SMC 23.66.322 and by special review under 23.66.324.
SMC 23.66.326
A. To retain and strengthen the King Street business core as a pedestrian-oriented retail shopping district, street-level uses are required on streets within the Retail Core designated on Map B for 23.66.326. Required street-level uses shall satisfy the standards of this Section 23.66.326.
B. Preference shall be given to pedestrian-oriented retail shopping and service businesses that are highly visible or prominently display merchandise in a manner that contributes color and activity to the streetscape, including but not limited to: Apparel shops; Asian arts, crafts, and specialty goods shops; Bakeries; Banks; Barbecue shops; Bookstores; Coffee shops; Floral shops; Groceries; Museums; Personal services such as beauty shops and barbershops; Restaurants; Sidewalk cafes; Tea shops; Travel agencies; Variety stores.
C. The Board may, following a special review of potential impacts, including, but not limited to traffic, parking, noise and the scale and character of the pedestrian environment, recommend to the Director of Neighborhoods that the following uses at street level be approved if the impacts of such uses are not significantly adverse: Residential uses
D.Standards for Required Street-level Uses.
1.Street-level uses within the Retail Core designated on Map B for 23.66.326 shall not exceed 50 feet of street frontage per use if located within the interior portion of a block, or 145 feet of street frontage per use if located on a corner.
2.Street-level uses shall comply with exterior building finish requirements of Section 23.66.336.
SMC 23.66.328. B
Residential uses and non-vehicular-oriented commercial uses that primarily serve the District and are in operation throughout the day are preferred. Preferred uses above street level include but are not limited to: Community clubs and centers; Expansion of existing retail sales and service uses at street level; Medical services

6. Street, Sidewalk and Alley
SMC 23.66.334
Review by the Special Review Board and approval by the Director of Neighborhoods are required before any changes may be made to sidewalk prism lights, sidewalk furniture, sidewalk widths, or street paving and curbs. Review by the Special Review Board and the Director of Neighborhoods, with respect to the International Special Review District goals and objectives in Section 23.66.302 as applicable, are required for any street design concept plan prior to inclusion in the Right-of-Way Improvements Manual.
SMC 23.53.030. Table C
Required Minimum Right-of-Way Widths for Existing Alleys:
4. NC3, C1, C2, SM, all downtown zones : 20 feet

7. Exterior building finishes
SMC 23.66.336
A.General Requirements. To retain and enhance the visual order of the District, which is created by existing older buildings that provide unique character and form through their subtle detailing and quarter-block and half-block coverage, new development, including exterior remodeling, should respect the architectural and structural integrity of the building in which the work is undertaken, through sympathetic use of colors, material and style. Exterior building facades shall be of a scale compatible with surrounding structures. Window proportions, floor height, cornice line, street elevations and other elements of the building facades shall relate to the scale of the existing buildings in the immediate area.
B.Asian Design Character District.
1.Materials. Building facades are limited to earthen materials such as brick, concrete, stucco and wood. Other materials may be used if approved by the Director of Neighborhoods. Decorative ceramic glazed roof tiles are encouraged, as are tiled awnings and marquees if appropriately integrated into the overall design.
2.Colors. Building facade colors must be reviewed by the Special Review Board and approved by the Director of Neighborhoods. Colors shall be compatible with those of adjacent buildings.
3.Surfaces. Textured concrete, brick and wood surfaces are preferred over non-textured surfaces. Recesses and voids that break up monotonous surface areas and create visual relief are encouraged. The design and location of mechanical equipment visible from the street must be reviewed by the Board and approved by the Director of Neighborhoods.
4.Transparency Requirement. Street-level uses shall have highly visible linkages with the street. Transparent surfaces shall be provided for at least 50 percent of the exposed street-facing facade measured between sidewalk level and a height of 10 feet or the height of the second floor level, whichever is less. The average height of window sills shall be no greater than 3 feet above the sidewalk.
5.Awnings. Awnings shall be functional, serving as weather protection for pedestrians at street level. Awnings over sidewalks shall overhang the sidewalk a minimum of five feet. All awnings shall be of a design compatible with the architecture of the area.

ZONING CODE SUMMARY

PROPOSED USE SMC 23.66.320	RESIDENTIAL COMMERCIAL PARKING
FLOOR AREA RATIO SMC 23.49.011	Base FAR = 1.5 Maximum = 2, if 50 percent or more of the total gross floor area on the lot is in residential use. Exemptions and deductions from FAR calculations: 1. b.Street-level uses f.Residential use k.Floor area below grade l.Floor area that is used only for parking accessory to residential uses y.The floor area of required bicycle parking 2.Mechanical equipment FAR PROPOSED: 0
PARKING SMC 23.49.019	PARKING REQUIRED : NONE PARKING PROPOSED: 9 5 MEDIUM STALLS: 56% 4 MEDIUM STALLS: 44% ADA PARKING: 2% OF TOTAL PROPOSED PARKING: 2%X9 = 1 SPACE
BIKE PARKING SMC 23.54.015.K. TABLE D	Multi-family structures: 1 per dwelling unit and 1 per small efficiency dwelling unit Sales and services, general: 1 per 4,000 square feet for long term; 1 per 2,000 square feet for short term Eating and drinking establishments: 1 per 5,000 square feet for long term; 1 per 1,000 square feet for short term REQUIRED:184 space for units+ 2 space for commercial= 186 spaces PROPOSED: 186 spaces
PARKING ACCESS SMC 23.66.342.D	1.Access to parking shall be reviewed by the Board on a case-by-case basis, according to the following criteria: a. Alley access is preferred. b. Conflicts with pedestrian traffic, with efforts to provide continuous street facades, and with transit access shall be minimized. 2.The number and width of curb cuts shall be as required in Section 23.54.030. 4.The Board may recommend, and the Department of Neighborhoods Director may require, changes to proposed access to parking in order to meet the criteria of this Section 23.66.342. PRPOSED PARKING ACCESS: ALLEY ONLY
MINIMUM SIDEWALK&ALLEY WIDTH 23.49. (MAP 1C)	5TH AVE S: 12 FEET SOUTH MAIN STREET: 12 FEET ALLEY: 20 FEET CURRENT ALLEY WIDTH: 16 FEET PROPOSED ALLEY DEDICATION (20-16)/2=2 FEET
STRUCTURE HEIGHT 23.49.236	BASE HEIGHT: 125 FEET The base height limit for portions of a structure that contain residential use, shown as the first figure following the "/", is the applicable residential height limit for portions of a structure that contain residential uses if the structure does not qualify for extra floor area under Section 23.49.023. The third figure shown, if any, is the applicable height limit for portions of a structure that contain residential uses if the structure qualifies for extra residential floor area under Section 23.49.023.
SETBACKS 23.49.242.D	GREEN STREET SETBACK SOUTH MAIN STREET: 15 FEET - (DEPARTURE REQUESTED)
LOT COVERAGE 23.49.242.C	MAX. LOT COVERAGE ABOVE 65 FEET: 75%. MAX. ALLOWED: 14,400 SF X 0.75 = 10,800 SF PROPOSED: 12,747 SF PER FL @ L7 & L8 - (DEPARTURE REQUESTED)
FACADE MODULATION 23.49.242.E	1.For structures 170 feet or less in height excluding rooftop features, modulation is required for the portion of a street-facing facade above 65 feet in height and located less than 15 feet from street lot lines. No modulation is required for portions of a facade set back 15 feet or more from street lot lines. 65 feet in height or less: No limit
BUILDING OVERHANG 23.53.035.B	The maximum length of each structural building overhang shall be 15 feet measured at any location that is beyond the property line. The bay or other projection may be shaped in any way that remains within the 3 foot by 15 foot envelope beyond the property lines. The minimum horizontal separation between bay windows, between balconies, and between bay window and balcony combinations, shall be 8 feet. - (DEPARTURE REQUESTED)
OVERHEAD WEATER PROTECTION 23.49.018	Continuous overhead weather protection shall be required for new development along the entire street frontage of a lot; minimum 10' above sidewalk grade and maximum 15' above sidewalk grade; must extend a minimum of 8' from building; provide adequate lighting.

LINK
LINK DESIGN GROUP LLC.
439 Kirkland Way
Kirkland, WA. US. 98033
+1.425.298.0080
602 Pengjiang RD, E461 ShangHai, China 200072
上海市静安区彭江路602号E座461室 邮编 200072
+86.21.6667.0228

Project No: Enter Client Supplied Number
XXXXXXXXXX

Client/Owner/Project Address
Owner
VIBRANT CITIES
606 Maynard Ave S
Suite 251
Seattle, WA 98104

Consultant

BLOSSOM APARTMENTS - COA SUBMITTAL

Issue Drawing Log

	09/04/20	INITIAL PRICING SET
	01/21/21	PERMIT SET SUBMITTAL
	03/05/21	COA SUBMITTAL

Professional Certification - I certify that these documents were prepared or approved by me, and that i am a duly licensed Architect under the laws of the state of Washington, License number _____, Expiration date _____.

8628 REGISTERED ARCHITECT
Jenny Li
JENNY LI
STATE OF WASHINGTON

SDCI APPROVAL STAMP

©LINK DESIGN GROUP LLC.
All rights reserved. No part of this document may be reproduced in any form or by any means without permission in writing from LINK DESIGN GROUP LLC.

PROJECT NUMBER	20-0108A
PROJECT MANAGER	JX
DRAWN BY	DS, MB

Sheet Identification
ZONING CODE SUMMARY

G104

REQUEST FOR EXCEPTION - UPPER LEVEL SETBACK

ZONING CODE	REQUIREMENT	PROPOSED	JUSTIFICATION
SMC 23.49.242.D.1a - International District Residential, Development Standards - Setbacks	In an IDR zone, a continuous upper-level setback of 15 feet is required from the green street lot line for all portions of the structure above 45 feet in height. This setback is not required if a structure is 65 feet in height or less.	Request a departure from the required green street upper level building setback at 45'-0" along the eastern ½-block of S Main St. to allow the building to be developed within the required setback space.	By infilling the setback with units on 4 levels, it allows the project to create an urban plaza and gathering space within the property line at the corner of 5th Ave and S Main St without reducing the number of workforce housing units planned for the neighborhood. The elimination of the upper level setback also breaks down the scale of the project into vertically proportioned facades, resulting in a building proportion that compliments the existing context. Furthermore, the subject property is located on the north side of the street and therefore, does not block sunlight to the street below. **SMC 23.66.302.A** - *Reestablishing the District as a stable residential neighborhood with a mixture of housing types* **SMC 23.66.302.B** - *Encouraging the use of street-level spaces for pedestrian-oriented retail specialty shops...* **SMC 23.66.302.E** - *Improving the visual and urban design relationships between existing and future buildings...open spaces and public improvements...* **SMC 23.66.306.D** - *The design, siting and construction of structures in a manner that allows reasonable solar exposure and air circulation to adjacent properties* **SMC 23.66.306.E** - *The design, siting and construction of structures that are aesthetically compatible with the area's steep topography and/or nearby public open spaces.* **SMC 23.66.336** - *Exterior building finishes: To retain and enhance the visual order of the District. Exterior building facades shall be of a scale compatible with surrounding structures. Window proportions, floor height, cornice line, street elevations and other elements of the building facades shall relate to the scale of the existing buildings in the immediate area.* **ISRD GUIDING PRINCIPLES (*not yet adopted as of 4/2021)** *Encouraging continuity in urban design and wayfinding through preservation and creation of new open spaces, alleys and rights-of-ways.* 1. *Context & Site:* **S2:** *Provide opportunities for street activation beyond just landscaping and transparency.* 2. *Public Life* **A5:** *...increase in the size and/or quality of project-related open space available for public life.* **B7:** *... Consider setting structures back from the street or incorporating space in the ground floor design into which retail uses can extend.* 3. *BUILDING DESIGN* **C2:** *When designing the massing (height, bulk, scale) of the building, consider the massing of adjacent buildings, characteristics of the site and nearby open spaces.* **C7:** *Where appropriate, design the exterior of the building to reflect interior use.*

PROPOSED LEVEL 5 FLOORPLAN

PROPOSED SOUTH ELEVATION

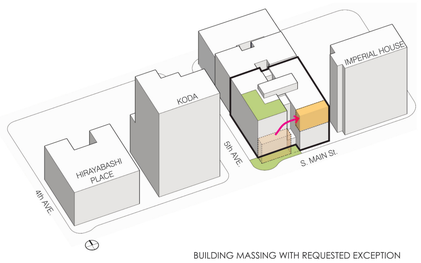

BUILDING MASSING WITH REQUESTED EXCEPTION

ZONE AFFECTED BY EXCEPTION REQUEST

REQUEST FOR EXCEPTION - UPPER FLOOR LOT COVERAGE

ZONING CODE	REQUIREMENT	PROPOSED	JUSTIFICATION
SMC 23.49.242.C.1 - International District Residential, Development Standards - Coverage Limits SMC 23.49.242.C.2 - International District Residential, Development Standards - Coverage Limits	In an IDR zone, upper-level coverage limits do not apply to structures 85 feet in height or less excluding rooftop features on lots of 8,000 square feet or less. For structures 170 feet in height or less the coverage limits are: 75% of lot area is permitted for floor area per story for structures that are greater than 65 feet and up to 125 feet.	Request a departure from the required coverage limits of 75% on the 8th floor of the building which is above 65 feet.	The elimination of the required upper level lot coverage would allow for a continuous facade along S Main St. which relates better to the vertically of the adjacent buildings. While the site's zoning allows for a maximum building development height of 270', the project does not take advantage of the allowable height in order to respond to the character of neighboring properties. By eliminating the upper level lot coverage requirement, the floorplate would be maximized which would preserve the amount of workforce housing units and preserve the open space plaza which is proposed on the street level. **SMC 23.66.302.A** - . *Reestablishing the District as a stable residential neighborhood with a mixture of housing types* **SMC 23.66.302.E** - *Improving the visual and urban design relationships between existing and future buildings...open spaces and public improvements within the International District* **SMC 23.66.306.D** - *The design, siting and construction of structures in a manner that allows reasonable solar exposure and air circulation to adjacent properties* **SMC 23.66.336** - *Exterior building finishes: To retain and enhance the visual order of the District. Exterior building facades shall be of a scale compatible with surrounding structures. Window proportions, floor height, cornice line, street elevations and other elements of the building facades shall relate to the scale of the existing buildings in the immediate area.* **ISRD GUIDING PRINCIPLES (*not yet adopted as of 4/2021)** 1. *BUILDING DESIGN* **A2:** *Respond to datum lines, street edge relationships and proportions created by existing buildings.* **C1:** *Where appropriate, make connections to neighboring buildings by using similar materials, proportions, modulation, articulation, fenestration, color, landscaping, detailing, textures and relief.* **C2:** *When designing the massing (height, bulk, scale) of the building, consider the massing of adjacent buildings, characteristics of the site and nearby open spaces.* **C7:** *Where appropriate, design the exterior of the building to reflect interior use.*

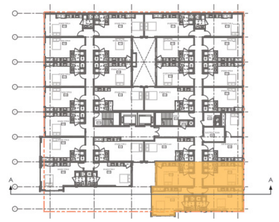

PROPOSED LEVEL 7-8 FLOORPLAN

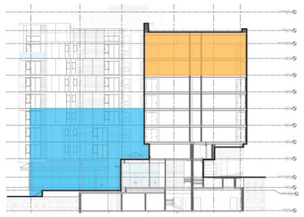

PROPOSED EW BUILDING SECTION A-A

COMPLIANT MASSING

PROPOSED MASSING

LEVEL	VOLUNTARY AREA REDUCTION (SF)	AREA OVER LOT COVERAGE (SF)	% OVERAGE PER FLOOR
1	750	-	-
2	1,523	-	-
3	1,523	-	-
4	1,523	-	-
5	-	-	-
6	-	-	-
7	-	1,947	13.5%
8	-	1,947	13.5%
TOTAL	**5,319**	**3,894**	**27%**

Total proposed SF less than allowed by **1,425 SF**

VOLUNTARY SETBACK

ZONE AFFECTED BY EXCEPTION REQUEST

REQUEST FOR EXCEPTION - STRUCTURAL BUILDING OVERHANGS

ZONING CODE	REQUIREMENT	PROPOSED	JUSTIFICATION
SMC 23.53.035.B.7 - Structural Building Overhangs And Minor Architectural Encroachments: Length SMC 23.53.035.B.9 - Structural Building Overhangs And Minor Architectural Encroachments: Separation	The maximum length of each structural building overhang shall be **15 feet** measured at any location that is beyond the property line. The bay or other projection may be shaped in any way that remains within the 3 foot by 15 foot envelope beyond the property lines. The minimum horizontal separation between bay windows, between balconies, and between bay window and balcony combinations, shall be **8 feet**	A departure is requested to exceed the maximum bay length by 10" for two units. A departure is requested to reduce the minimum horizontal separation between 2 bay windows to zero at the Southeast corner of the building.	The project's efficient workforce housing unit plan is based on a 15' wide grid line that is center on the middle of the demising wall of each unit. The requested 10" of length is a result of the thickness of the interior partition being represented on the exterior facade, 5" on each side of a unit. Combined two bay window lengths to create a larger massing move at the building's dominant street corner for a more elegantly proportioned articulated facade that fits in with the overall character and story of the building design and adjacent projects. The total area of Structural Building Overhangs does not exceed code maximum. **SMC 23.66.302.E** - *Improving the visual and urban design relationships between existing and future buildings...open spaces and public improvements within the International District* **SMC 23.66.336** - *Exterior building finishes: To retain and enhance the visual order of the District. Exterior building facades shall be of a scale compatible with surrounding structures. Window proportions, floor height, cornice line, street elevations and other elements of the building facades shall relate to the scale of the existing buildings in the immediate area.* **ISRD GUIDING PRINCIPLES (*not yet adopted as of 4/2021)** 1. *Context & Site:* **A1:** *...neighborhood context* **A2:** *...proportions created by existing buildings* 2. *BUILDING DESIGN* **C2:** *...consider massing of adjacent buildings...* **C7:** *Where appropriate, design the exterior of the building to reflect interior use.* **C10:** *Design new buildings and additions to reflect contemporary architectural practices. Avoid materials and designs that create a false sense of history.*

PROPOSED WEST ELEVATION

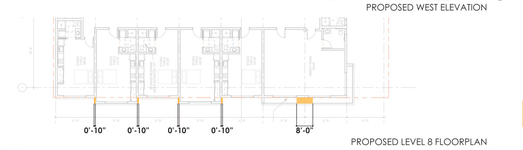

PROPOSED LEVEL 8 FLOORPLAN

ZONE AFFECTED BY EXCEPTION REQUEST

LINK
LINK DESIGN GROUP LLC.
439 Kirkland Way
Kirkland, WA. US. 98033
+1.425.298.0080

602 Pengjiang RD, E461 ShangHai, China 200072
上海市静安区彭江路602号E座461室 邮编 200072
+86.21.6667.0228

Project No: Enter Client Supplied Number
XXXXXXXXXXX

Client/Owner/Project Address

Owner
VIBRANT CITIES
606 Maynard Ave S
Suite 251
Seattle, WA 98104

Consultant

BLOSSOM APARTMENTS - COA SUBMITTAL

-

Issue Drawing Log

	09/04/20	INITIAL PRICING SET
	01/21/21	PERMIT SET SUBMITTAL
	03/05/21	COA SUBMITTAL

Professional Certification - I certify that these documents were prepared or approved by me, and that i am a duly licensed Architect under the laws of the state of Washington. License number _____, Expiration date _____.

8628 REGISTERED ARCHITECT JENNY LI STATE OF WASHINGTON

SDCI APPROVAL STAMP

©LINK DESIGN GROUP LLC.
All rights reserved. No part of this document may be reproduced in any form or by any means without permission in writing from LINK DESIGN GROUP LLC.

PROJECT NUMBER	20-0108A
PROJECT MANAGER	JX
DRAWN BY	DS, MB

Sheet Identification

ZONING DEPARTURES

G104.1

REQUEST FOR EXCEPTION - ALLEY SETBACK

ZONING CODE	REQUIREMENT	PROPOSED	JUSTIFICATION
SMC 23.53.030.F.1 - Minimum Width Required For Existing Alleys	Alleys in downtown zones shall have a minimum width of 20' to at least 16' above the finish grade, when an existing alley does not meet that width, a dedication equal to half the difference between the existing (16') and the minimum required shall be required. 2' is provided.	PER SMC 23.53.030.G.5, The director may modify or waive the requirements for dedication if it is determined that the widening would be detrimental to the character and goals of the district. A 2' dedication will be provided for the height of the finished level at the alley (L1 to L3), approximately 12'-6" above grade which is less than the recommended 26' but more than the 8' approved for the development to the north (exception granted by the ISRD on 10/27/2020). The alley slopes over 16' from north to south. Above the proposed alley setback heights, the building will project out to the current property line.	To relate the facade in proportion to the proposed building to the north and to establish an elegant base, middle and top vocabulary. Loading and trash servicing/staging at the alley takes place towards the entry of the alley and adequate hight clearances have been provided in that area and coordinated with SDOT and SPU Solid Waste. **SMC 23.66.302.E** - *Improving the visual and urban design relationships between existing and future buildings, parking garages, open spaces and public improvements within the International District* **SMC 23.66.306.E** - *The design, siting and construction of structures that are aesthetically compatible with the area's steep topography and/or nearby public open spaces.* **SMC 23.66.336** - *Exterior building finishes: To retain and enhance the visual order of the District. Exterior building facades shall be of a scale compatible with surrounding structures. Window proportions, floor height, cornice line, street elevations and other elements of the building facades shall relate to the scale of the existing buildings in the immediate area.* **ISRD GUIDING PRINCIPLES (*not yet adopted as of 4/2021)** 1. *BUILDING DESIGN* **C1:** *Where appropriate, make connections to neighboring buildings by using similar materials, proportions, modulation, articulation, fenestration, color, landscaping, detailing, textures and relief.* **C2:** *...consider massing of adjacent buildings...*

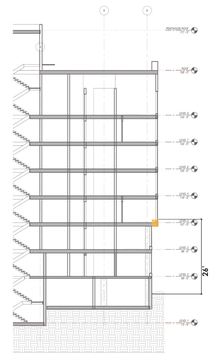

PROPOSED EW BUILDING SECTION

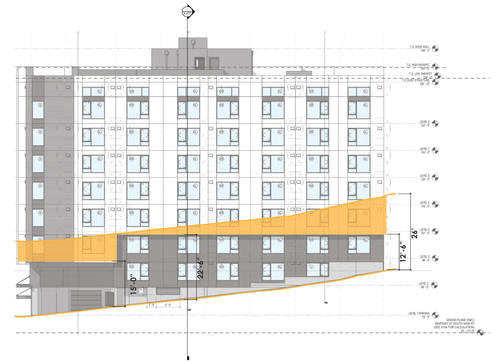

PROPOSED EAST ELEVATION

ZONE AFFECTED BY EXCEPTION REQUEST

APPROVED FUTURE PROJECT EAST ELEVATION

PROPOSED EAST ELEVATION

ZONE AFFECTED BY EXCEPTION REQUEST

LINK
LINK DESIGN GROUP LLC.
439 Kirkland Way
Kirkland, WA. US. 98033
+1.425.298.0080

602 Pengjiang RD, E461 ShangHai, China 200072
上海市静安区彭江路602号E座461室 邮编 200072
+86.21.6667.0228

Project No: Enter Client Supplied Number
XXXXXXXXXX

Client/Owner/Project Address

Owner
VIBRANT CITIES
606 Maynard Ave S
Suite 251
Seattle, WA 98104

Consultant

BLOSSOM APARTMENTS - COA SUBMITTAL

Issue Drawing Log

	09/04/20	INITIAL PRICING SET
	01/21/21	PERMIT SET SUBMITTAL
	03/05/21	COA SUBMITTAL

Professional Certification - I certify that these documents were prepared or approved by me, and that I am a duly licensed Architect under the laws of the state of Washington, License number _____, Expiration date _____.

8628 REGISTERED ARCHITECT
Jenny Li
JENNY LI
STATE OF WASHINGTON

SDCI APPROVAL STAMP

©LINK DESIGN GROUP LLC.
All rights reserved. No part of this document may be reproduced in any form or by any means without permission in writing from LINK DESIGN GROUP LLC.

PROJECT NUMBER	20-0108A
PROJECT MANAGER	JX
DRAWN BY	DS, MB

Sheet Identification

ZONING DEPARTURES

G104.2

ZONING CODE SUMMARY

SMC 23.66.302 - International Special Review District goals and objectives

The International District is the urban focal point for the Asian American community. The International Special Review District is established to promote, preserve and perpetuate the cultural, economic, historical, and otherwise beneficial qualities of the area, particularly the features derived from its Asian heritage, by:

A.Reestablishing the District as a stable residential neighborhood with a mixture of housing types;

B.Encouraging the use of street-level spaces for pedestrian-oriented retail specialty shops with colorful and interesting displays;

C.Protecting the area and its periphery from the proliferation of parking lots and other automobile-oriented uses;

D.Encouraging the rehabilitation of existing structures;

E.Improving the visual and urban design relationships between existing and future buildings, parking garages, open spaces and public improvements within the International District;

F.Exercising a reasonable degree of control over site development and the location of off-street parking and other automobile-oriented uses; and

G.Discouraging traffic and parking resulting from athletic stadium events and commuters working outside the District.

SMC 23.66.306 - International District Residential (IDR) Zone goals and objectives

A.The establishment of the International District area north of South Jackson Street as one of downtown's predominant residential neighborhoods;

B.The development of flexible land use controls, regulations and guidelines to address present conditions and those which may develop in the future;

C.The design, siting, and construction of structures that minimize view blockage from Kobe Terrace Park and from existing structures that are used primarily for residential purposes;

D.The design, siting and construction of structures in a manner that allows reasonable solar exposure and air circulation to adjacent properties;

E.The design, siting and construction of structures that are aesthetically compatible with the area's steep topography and/or nearby public open spaces.

EXISTING ISRD DESIGN GUIDELINES

I. AWNINGS AND CANOPIES

Those businesses that want to install awnings or canopies shall conform to the following requirements:

A. PERMITTED ELEMENTS

1. Awnings shall be of a solid through color, i.e., the underside of the awning is the same color as the exposed face.

2. Awnings shall be a color compatible with the building facade.

3. Interior lighted awnings shall be permitted if the lighting system is encased or screened from view underneath. Warm color lighting systems and neon are encouraged.

4. The scale of the awning, i.e., height, length, depth and overall bulk shall be compatible with the building storefront.

5. Signage and graphics applied to awnings shall be reviewed for color, scale, and overall design compatibility. Large letter sizes and message areas shall not be permitted on awnings. Asian symbols or designs are encouraged elements.

B. PROHIBITED ELEMENTS

I. Awnings shall not be made of shiny, high-gloss, and translucent materials.

2. Awning shall not cover distinctive architectural features of the building face, nor shall installation of the awning damage the structure.

3. Curved shaped awnings are not permitted. A curved shape may be considered only when the curved component is only a minor element of overall design.

C. REQUIREMENTS

1. Awnings over sidewalks shall overhang the sidewalk a minimum of five feet (5').

D. CANOPIES

1. Tiled covered canopies are an encouraged element.

II. STOREFRONT AND BUILDING DESIGN GUIDELINES

The following guidelines will be used by the board in the evaluation of requests for storefront and building design approval and shall apply to the Asian Design Character District (SMC23.66.326).

A. Any exterior facade alteration shall respect the original architectural integrity of the storefront.

B. Earthen materials such as brick, wood, concrete, and tile shall be used for entry doors, windows and the main facade. The painting of brick shall be discouraged.

C. Recessed entryways and/or alcoves shall be maintained for existing street level storefronts.

D. Original storefront fenestration shall be preserved (i.e., bay windows, transom areas and door design).

E. Anodized aluminum or other metal materials shall be reviewed by the board and permitted when:

I. The historic appearance of the building and district is preserved by replicating visual building details.

2. The aluminum or metal material is painted of a compatible color.

3. The building is a non-contributing historically or architecturally significant building.

4. The appearance does not impact a primary facade.

F. All glass and window areas shall be clear. Mirrored glass is not permitted in the district.

G. Physical elements that exhibit the district's Asian character shall be encouraged, preserved and restored. Such items include calligraphic signs, lattice work, and tiled canopies.

LINK
LINK DESIGN GROUP LLC.
439 Kirkland Way
Kirkland, WA. US. 98033
+1.425.298.0080

602 Pengjiang RD, E461 ShangHai, China 200072
上海市静安区彭江路602号E座461室 邮编 200072
+86.21.6667.0228

Project No: Enter Client Supplied Number
XXXXXXXXXX

Client/Owner/Project Address

Owner
VIBRANT CITIES
606 Maynard Ave S
Suite 251
Seattle, WA 98104

Consultant

BLOSSOM APARTMENTS - COA SUBMITTAL

Issue Drawing Log

	05/18/18	PRELIM. PRICING SET
	07/13/18	PERMIT SET
	01/14/19	GMP SET
	06/03/19	LUX #1
6	03/06/2020	IFC SET
7	07/01/2020	ASI #3
7 R1	07/01/2020	ASI #3 REVISION #1
8	07/29/2020	ASI #4
9	10/23/2020	ASI #5
	10/23/2020	POST PERMIT REVISION

Professional Certification - I certify that these documents were prepared or approved by me, and that I am a duly licensed Architect under the laws of the state of Washington, License number _____, Expiration date _____.

8628 REGISTERED ARCHITECT
Jenny Li
JENNY LI
STATE OF WASHINGTON

©LINK DESIGN GROUP LLC.
All rights reserved. No part of this document may be reproduced in any form or by any means without permission in writing from LINK DESIGN GROUP LLC.

PROJECT NUMBER	17-108717
PROJECT MANAGER	JX
DRAWN BY	CS, LM

Sheet Identification

DESIGN GUIDLINES

G104.3

TYPE IIIA CONSTRUCTION/ FIRE SEPARATION DIAGRAM - PLAN (LEVEL 4 SHOWN)

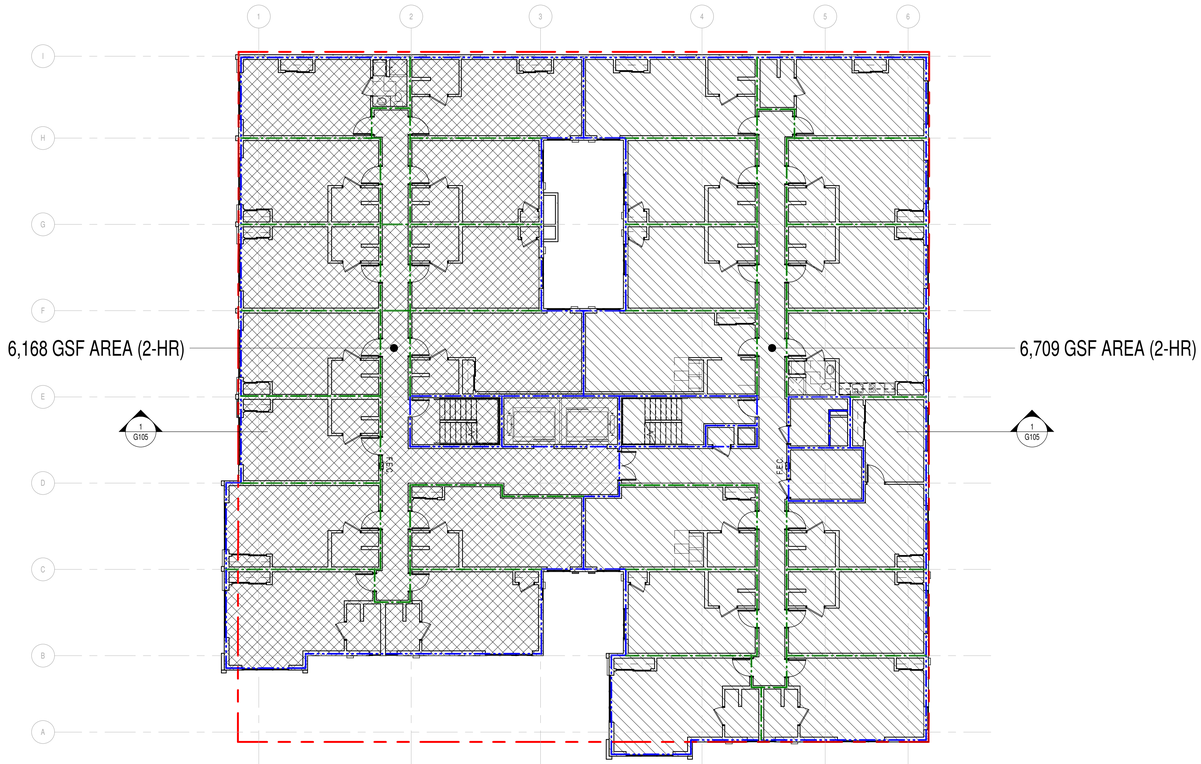

FIRE RATING LEGEND

- 1 HOUR RATED WALL / FLOOR
- 2 HOUR RATED WALL / FLOOR
- 3 HOUR RATED WALL / FLOOR
- 4 HOUR RATED WALL / FLOOR

STRUCTURE HEIGHT DIAGRAM / TYPE IIIA CONSTRUCTION/ FIRE SEPARATION DIAGRAM - SECTION

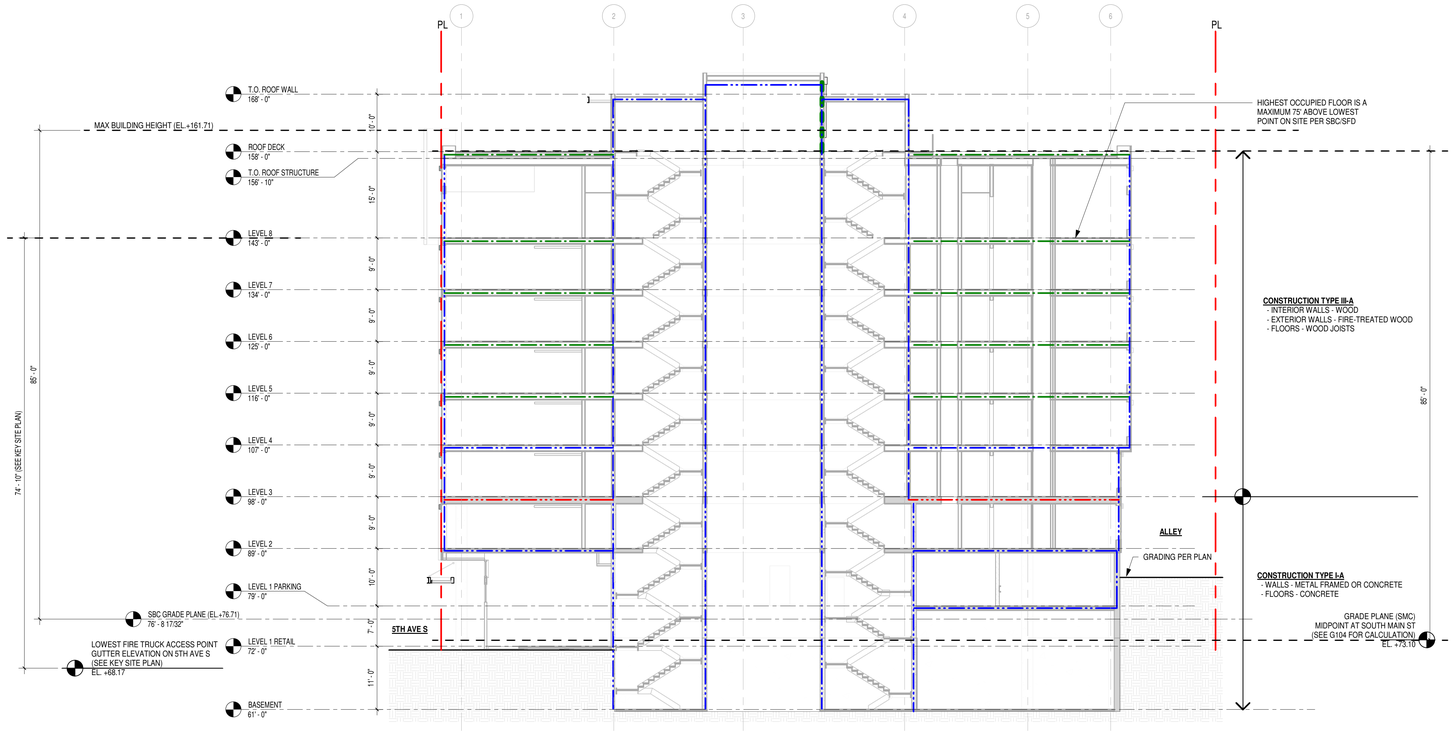

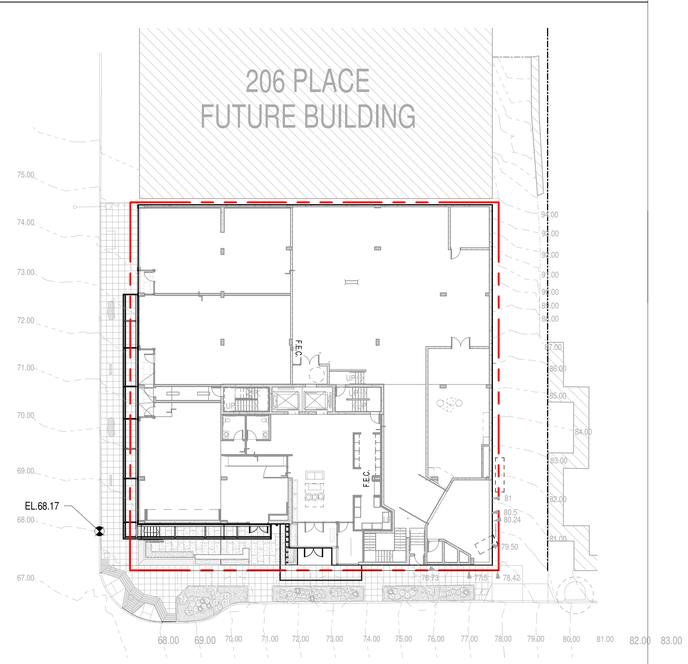

3 KEY SITE PLAN

1" = 20'-0"

LINK

LINK DESIGN GROUP LLC.

439 Kirkland Way
Kirkland, WA. US. 98033
+1.425.298.0080

602 Pengjiang RD, E461 ShangHai, China 200072
上海市静安区彭江路602号E座461室 邮编 200072
+86.21.6667.0228

Project No: Enter Client Supplied Number
XXXXXXXXXX

Client/Owner/Project Address

Owner
VIBRANT CITIES
606 Maynard Ave S
Suite 251
Seattle, WA 98104

Consultant

BLOSSOM APARTMENTS - COA SUBMITTAL

-

Issue Drawing Log

	09/04/20	INITIAL PRICING SET
	01/21/21	PERMIT SET SUBMITTAL
	03/05/21	COA SUBMITTAL

Professional Certification - I certify that these documents were prepared or approved by me, and that i am a duly licensed Architect under the laws of the state of Washington. License number _____, Expiration date _____

8628 REGISTERED ARCHITECT JENNY LI STATE OF WASHINGTON

SDCI APPROVAL STAMP

©LINK DESIGN GROUP LLC.
All rights reserved. No part of this document may be reproduced in any form or by any means without permission in writing from LINK DESIGN GROUP LLC.

PROJECT NUMBER	20-0108A
PROJECT MANAGER	JX
DRAWN BY	DS, MB

Sheet Identification

STRUCTURE HEIGHT / FIRE SEPARATION DIAGRAMS

G105

4 SITE PLAN - GRADE PLANE - SMC

1" = 20'-0"

GRADE PLANE CALCULATION (SMC)

SOUTH MAIN STREET WILL BE SELECTED PER SECTION 23.86.006.E.1, AS THE LOT HAS TWO OR MORE STREET LOT LINES OF EQUAL LENGTH, THE APPLICANT SHALL CHOOSE THE MAJOR STREET LOT LINE.

PER SECTION 23.86.006.E.3.A, THE ELEVATION OF MAXIMUM HEIGHT SHALL BE DETERMINED BY ADDING THE MAXIMUM PERMITTED HEIGHT TO THE EXISTING GRADE ELEVATION AT THE MIDPOINT OF THE MAJOR STREET LOT LINE.

78.47' - 67.90' = 10.57' / 120.00' = 8.8% > 7.5%. LENGTH OF LOT IS NO LONGER THAN 120' SO THE MIDPOINT OF THE MAJOR STREET LOT LINE WILL BE USED.

AVERAGE GRADE PLANE: +73.10

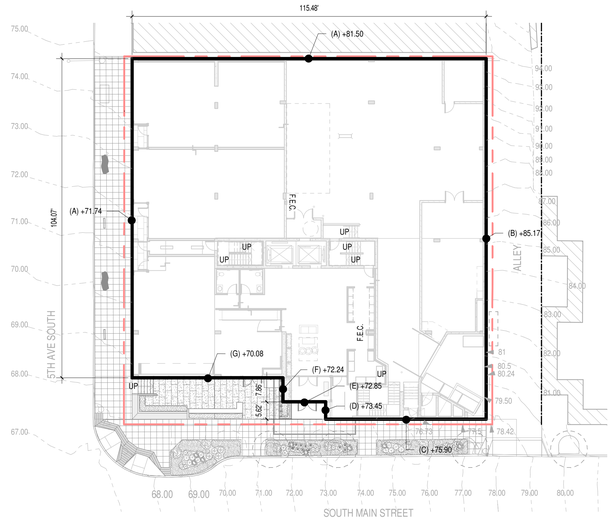

5 SITE PLAN - GRADE PLANE - SBC

1" = 20'-0"

GRADE PLANE CALCULATION (SBC)

WALL SEGMENT	LENGTH	MID PT. ELEV.	LENGTH X MID PT. ELEV
A	104.07	71.74	7,465.98
B	117.55	85.17	10,011.73
C	53.32	75.90	3971.08
D	5.65	73.45	414.99
E	13.95	72.85	1,016.25
F	7.83	72.24	565.64
G	49.21	70.08	3,448.64
TOTAL	350.58		26,894.32
	GRADE PLANE	**26,894.32 / 350.58 =**	**76.71**

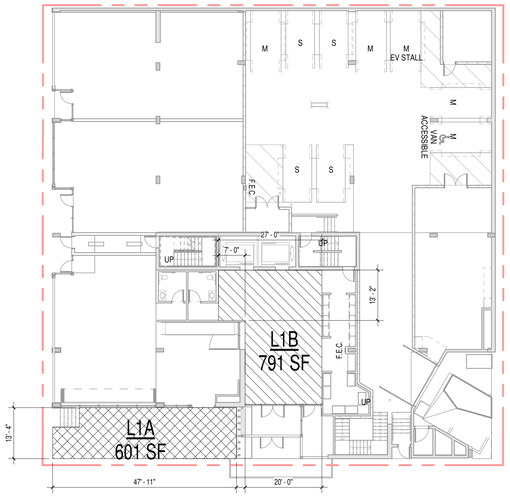

1 LEVEL 1 - COMMON RECREATION AREA

1/16" = 1'-0"

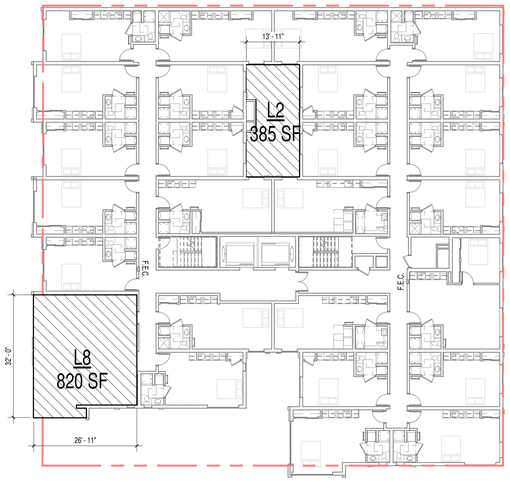

2 LEVEL 2 & 8 - COMMON RECREATION AREA

1/16" = 1'-0"

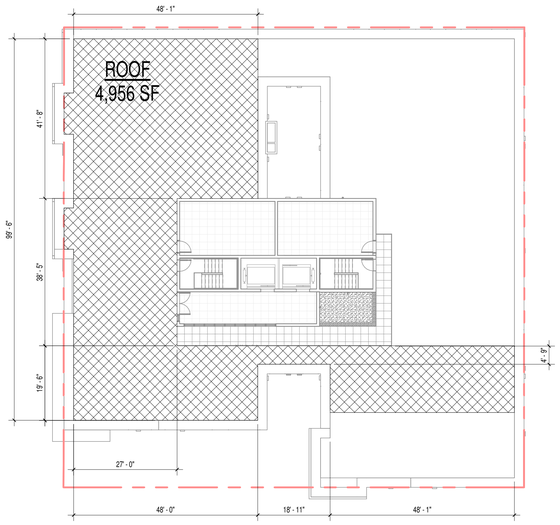

3 ROOF - COMMON RECREATION AREA

1/16" = 1'-0"

AMENITY AREA TYPE LEGEND

OUTDOOR

INDOOR / ENCLOSED

AREA SCHEDULE - AMENITIES

NAME	AREA TYPE	AREA (SF)
L1A	OUTDOOR	601
L2	OUTDOOR	385
ROOF	OUTDOOR	4,956
SUBTOTAL		**5,942**
L1B	INDOOR / ENCLOSED	791
L8	INDOOR / ENCLOSED	820
SUBTOTAL		**1,611**
GRAND TOTAL		**7,553**

COMMON RECREATION AREA

SMC 23.49.010B. COMMON RECREATION AREA IS REQUIRED FOR ALL NEW DEVELOPMENT WITH MORE THAN 20 DWELLING UNITS. REQUIRED COMMON RECREATION AREA SHALL MEET THE FOLLOWING STANDARDS:
1. AN AREA EQUIVALENT TO 5 PERCENT OF THE TOTAL GROSS FLOOR AREA IN RESIDENTIAL USE, EXCLUDING ANY FLOOR AREA IN RESIDENTIAL USE GAINED IN A PROJECT THROUGH A VOLUNTARY AGREEMENT FOR HOUSING UNDER SECTION 23.49.015, SHALL BE PROVIDED AS COMMON RECREATION AREA. THE AMOUNT OF REQUIRED COMMON RECREATION AREA SHALL NOT EXCEED THE AREA OF THE LOT. THE COMMON RECREATION AREA SHALL BE AVAILABLE TO ALL RESIDENTS AND MAY BE PROVIDED AT OR ABOVE GROUND LEVEL.
2. A MAXIMUM OF 50 PERCENT OF THE COMMON RECREATION AREA MAY BE ENCLOSED.

TOTAL GROSS FLOOR AREA:	79,270 SF (SEE G107.1 FOR AREA CALCULATION)
AMENITY AREA REQUIRED (5%):	5% X 79,270 SF = 3,964 SF
AMENITY AREA PROVIDED:	7,553 SF
ENCLOSED AMENITY AREA MAX (50%):	1,611 SF / 5,942 SF = 27% < 50%

LINK
LINK DESIGN GROUP LLC.
439 Kirkland Way
Kirkland, WA. US. 98033
+1.425.298.0080

602 Pengjiang RD, E461 ShangHai, China 200072
上海市静安区彭江路602号E座461室 邮编 200072
+86.21.6667.0228

Project No: Enter Client Supplied Number
XXXXXXXXXX

Client/Owner/Project Address

Owner
VIBRANT CITIES
606 Maynard Ave S
Suite 251
Seattle, WA 98104

Consultant

BLOSSOM APARTMENTS - COA SUBMITTAL

Issue Drawing Log

	09/04/20	INITIAL PRICING SET
	01/21/21	PERMIT SET SUBMITTAL
	03/05/21	COA SUBMITTAL

Professional Certification - I certify that these documents were prepared or approved by me, and that i am a duly licensed Architect under the laws of the state of Washington, License number _____, Expiration date _____.

8628 REGISTERED ARCHITECT JENNY LI STATE OF WASHINGTON

SDCI APPROVAL STAMP

©LINK DESIGN GROUP LLC.
All rights reserved. No part of this document may be reproduced in any form or by any means without permission in writing from LINK DESIGN GROUP LLC.

PROJECT NUMBER	20-0108A
PROJECT MANAGER	JX
DRAWN BY	DS, MB

Sheet Identification

RESIDENTIAL COMMON REC AREA, GRADE PLANE CALCULATIONS

G106

PARKING REQUIREMENTS

SBC 23.54.030.B.1.b.
WHEN MORE THAN FIVE PARKING SPACES ARE PROVIDED, A MINIMUM OF 60 PERCENT OF THE PARKING SPACES SHALL BE STRIPED FOR MEDIUM VEHICLES. THE MINIMUM SIZE FOR A MEDIUM PARKING SPACE SHALL ALSO BE THE MAXIMUM SIZE. FORTY PERCENT OF THE PARKING SPACES MAY BE STRIPED FOR ANY SIZE.

REQUIRED: 9 STALLS X .60 = 5.4 = 5
PROVIDED: 5 MEDIUM STALLS

SBC 1106.1, 1106.2, 1106.5; FHA REQ. 2; FHADM 2.23
ACCESSIBLE PARKING IS REQUIRED TO BE 2% OF PROVIDED PARKING. 1 PER 6 ACCESSIBLE STALLS (PROVIDED) MUST BE A VAN ACCESSIBLE STALL.

REQUIRED: 9 STALLS X .02 = .18 = 1
PROVIDED: 1 ADA (VAN ACCESSIBLE)

WAC 51-50-0427 SECTION 427
5% OF PARKING ARE TO BE ELECTRICAL VEHICLE CHARGING STATIONS. EXCEPTION IN R2 IF LESS THAN 20 ON-SITE SPACES ARE PROVIDED.

REQUIRED: 9 STALLS X .05 = .45 = 1
PROVIDED: 1 EV STALL (ACCESSIBLE)

PARKING COUNT

SMALL	4
MEDIUM EV	1
MEDIUM ADA	1
MEDIUM	3
TOTAL	9

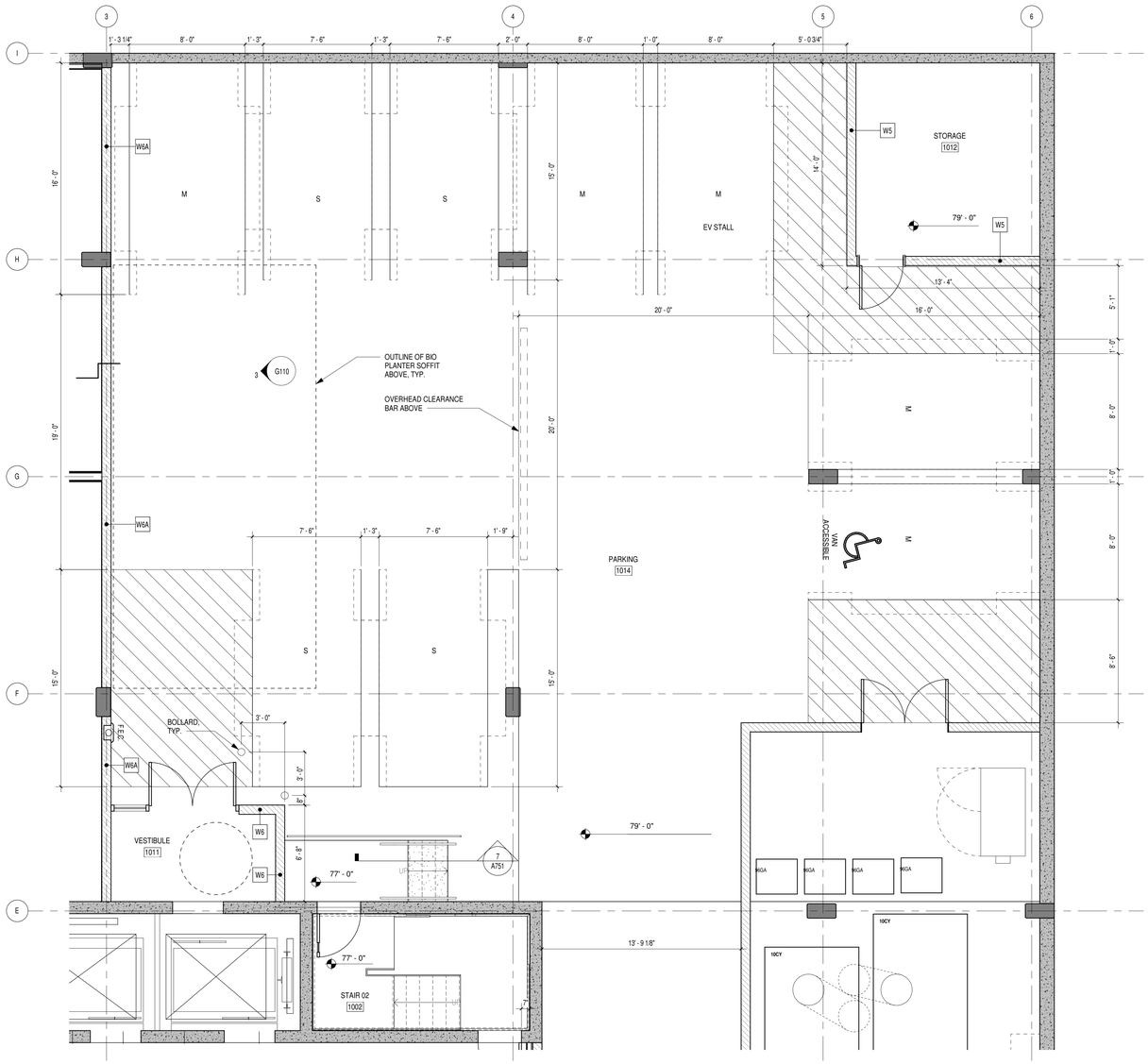

1 ENLARGED PLAN - LEVEL 1 PARKING
1/4" = 1'-0"

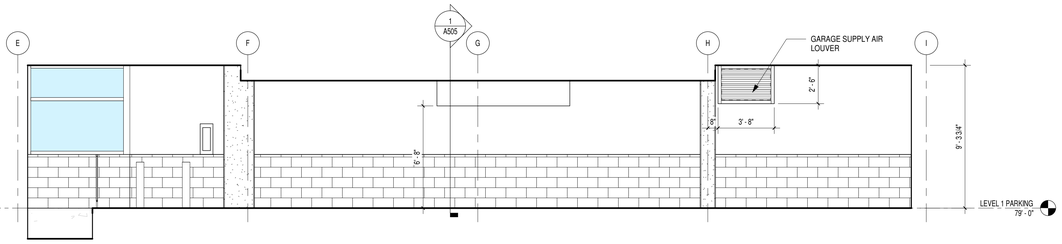

3 INTERIOR ELEVATION PARKING GARAGE
1/4" = 1'-0"

SOLID WASTE & RECYCLABLE MATERIALS STORAGE AND ACCESS

SBC TABLE A 23.54.040 - MINIMUM AREA

RESIDENTIAL DEVELOPMENT

DWELLING UNITS: 182

REQUIRED MIN. SHARED SOLID WASTE AREA:
FOR MORE THAN 100 DWELLING UNITS, 575 SF + 4 SF FOR EACH ADD'L UNIT ABOVE 100

575 SF + (4 SF X 82) = 903 SF

23.54.040.C. THE REQUIRED MIN. AREA FOR STORAGE SPACE MAY BE REDUCED BY 15%, IF THE AREA PROVIDED AS STORAGE SPACE HAS A MINIMUM HORIZONTAL DIMENSION OF 20 FEET.

903 SF X .85 = **767 SF**

NON-RESIDENTIAL DEVELOPMENT

DEVELOPMENT AREA: 4,321 SF

REQUIRED MIN. SHARED SOLID WASTE AREA:
FOR 0 - 5,000 SF, 82 SF X 50%= **41 SF**

REQUIRED MIN. SHARED SOLID WASTE AREA: 767 + 41 = 808 SF

PROVIDED SHARED SOLID WASTE AREA: **860 SF**

CONTAINER SIZE SUMMARY

WASTE	TENANT	NUMBER	VOLUME	TOTAL
RECYCLING	RESIDENTIAL	1	10 CY	10 CY
	COMMERCIAL	2	1.5 CY	3 CY
GARBAGE	SHARED	1	10 CY	10 CY
COMPOST	RESIDENTIAL	4	96 GA	384 GA
	COMMERCIAL	1	2 CY	2 CY

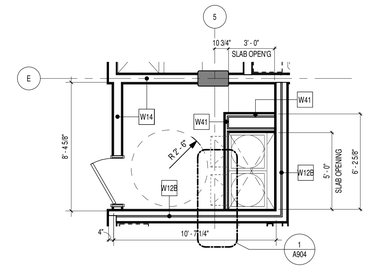

4 ENLARGED PLAN - TRASH ROOM (L2-L8)
1/4" = 1'-0"

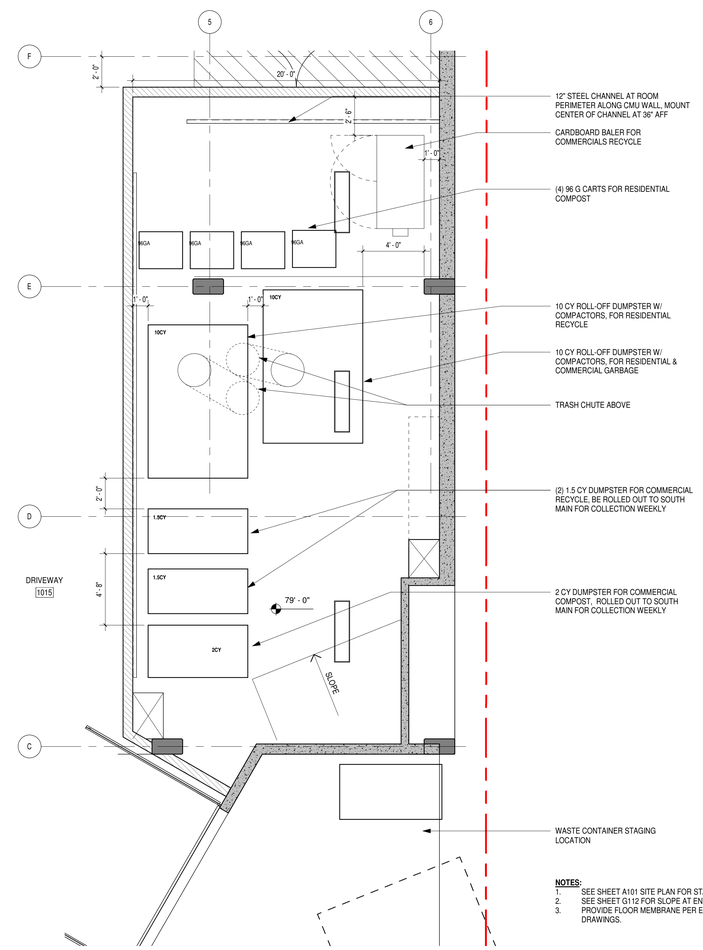

NOTES:
1. SEE SHEET A101 SITE PLAN FOR STAGING LOCATIONS.
2. SEE SHEET G112 FOR SLOPE AT ENTRY DOOR.
3. PROVIDE FLOOR MEMBRANE PER ENVELOPE DRAWINGS.

2 ENLARGED PLAN - TRASH ROOM (L1)
1/4" = 1'-0"

LINK
LINK DESIGN GROUP LLC.
439 Kirkland Way
Kirkland, WA. US. 98033
+1.425.298.0080
602 Pengjiang RD, E461 ShangHai, China 200072
上海市静安区彭江路602号E座461室 邮编 200072
+86.21.6667.0228

Project No: Enter Client Supplied Number
XXXXXXXXXX

Client/Owner/Project Address

Owner
VIBRANT CITIES
606 Maynard Ave S
Suite 251
Seattle, WA 98104

Consultant

BLOSSOM APARTMENTS - COA SUBMITTAL

Issue Drawing Log

	09/04/20	INITIAL PRICING SET
	01/21/21	PERMIT SET SUBMITTAL
	03/05/21	COA SUBMITTAL

Professional Certification - I certify that these documents were prepared or approved by me, and that I am a duly licensed Architect under the laws of the state of Washington, License number _____, Expiration date _____.

8628 REGISTERED ARCHITECT
JENNY LI
STATE OF WASHINGTON

SDCI APPROVAL STAMP

©LINK DESIGN GROUP LLC.
All rights reserved. No part of this document may be reproduced in any form or by any means without permission in writing from LINK DESIGN GROUP LLC.

PROJECT NUMBER	20-0108A
PROJECT MANAGER	JX
DRAWN BY	DS, MB

Sheet Identification

ENLARGED PLANS - TRASH ROOM AND PARKING

G110

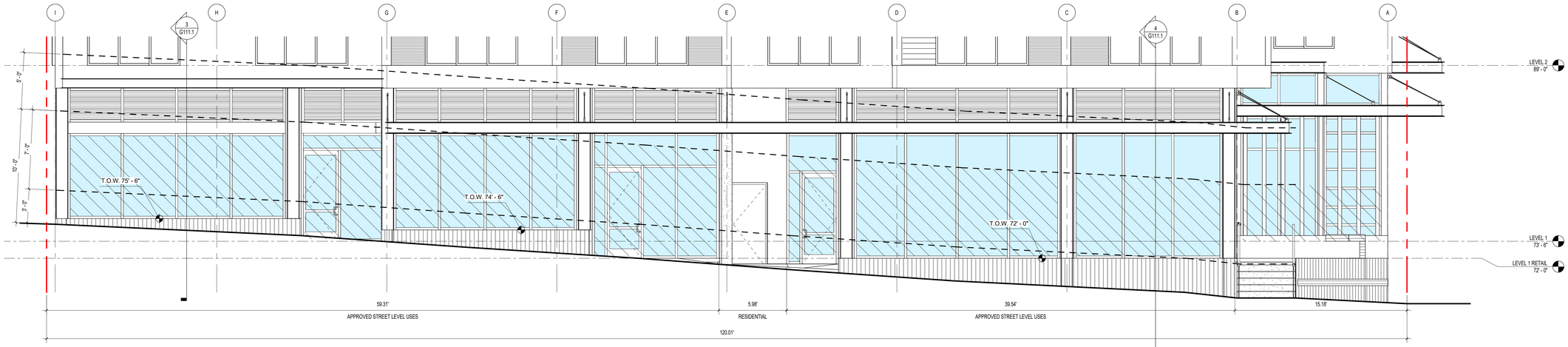

STREET LEVEL USE CALCULATIONS:
SMC 23.66.326.D.1, STREET-LEVEL USES SHALL NOT EXCEED 145 FEET OF STREET FRONTAGE PER USE IF LOCATED ON A CORNER.
PROPOSED: 59.31 + 39.60 = **98.91**

TRANSPARENCY CALCULATIONS:
SMC 23.66.3326.B.4. TRANSPARENT SURFACES SHALL BE PROVIDED FOR AT LEAST 50 PERCENT OF THE EXPOSED STREET-FACING FACADE MEASURED BETWEEN SIDEWALK LEVEL AND A HEIGHT OF 10 FEET OR THE HEIGHT OF THE SECOND FLOOR LEVEL, WHICHEVER IS LESS. THE AVERAGE HEIGHT OF WINDOW SILLS SHALL BE NO GREATER THAN 3 FEET ABOVE THE SIDEWALK.
FACADE AREA: 1,177 SF
PROPOSED: 742 SF / 1,177 SF = **63%**

1 FACADE CALCULATIONS - WEST ELEVATION
1/4" = 1'-0"

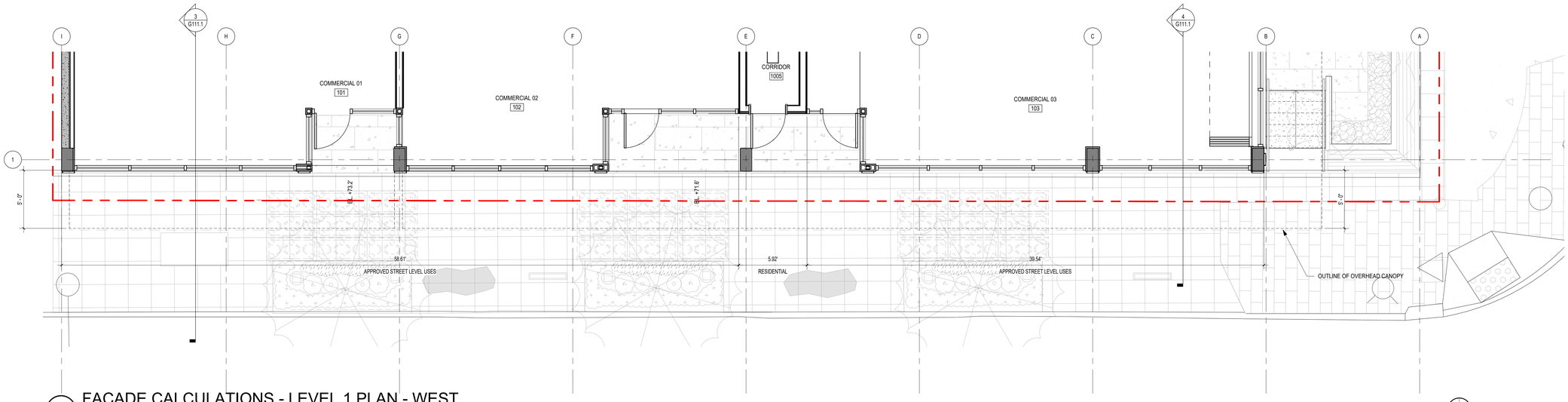

2 FACADE CALCULATIONS - LEVEL 1 PLAN - WEST
1/4" = 1'-0"

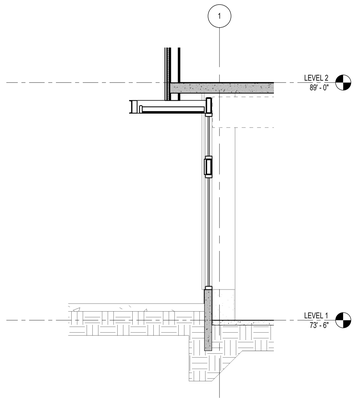

3 CANOPY SECTION - WEST 01
1/4" = 1'-0"

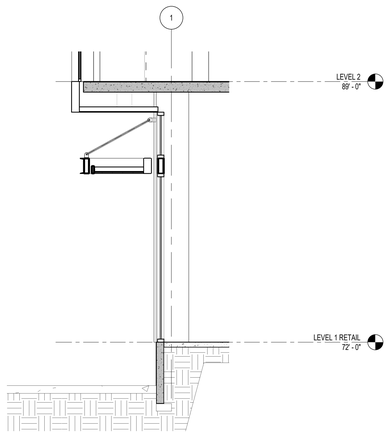

4 CANOPY SECTION - WEST 02
1/4" = 1'-0"

LINK
LINK DESIGN GROUP LLC.
439 Kirkland Way
Kirkland, WA. US. 98033
+1.425.298.0080
602 Pengjiang RD, E461 ShangHai, China 200072
上海市静安区彭江路602号E园461室 邮编 200072
+86.21.6667.0228

Project No: Enter Client Supplied Number XXXXXXXXXX

Client/Owner/Project Address

Owner
VIBRANT CITIES
606 Maynard Ave S
Suite 251
Seattle, WA 98104

Consultant

BLOSSOM APARTMENTS - COA SUBMITTAL

Issue Drawing Log

	09/04/20	INITIAL PRICING SET
	01/21/21	PERMIT SET SUBMITTAL
	03/05/21	COA SUBMITTAL

Professional Certification - I certify that these documents were prepared or approved by me, and that I am a duly licensed Architect under the laws of the state of Washington, License number _____, Expiration date _____.

8628 REGISTERED ARCHITECT JENNY LI STATE OF WASHINGTON

SDCI APPROVAL STAMP

©LINK DESIGN GROUP LLC.
All rights reserved. No part of this document may be reproduced in any form or by any means without permission in writing from LINK DESIGN GROUP LLC.

PROJECT NUMBER	20-0108A
PROJECT MANAGER	JX
DRAWN BY	DS, MB

Sheet Identification

EXTERIOR BUILDING FINISHES DIAGRAMS

G111.1

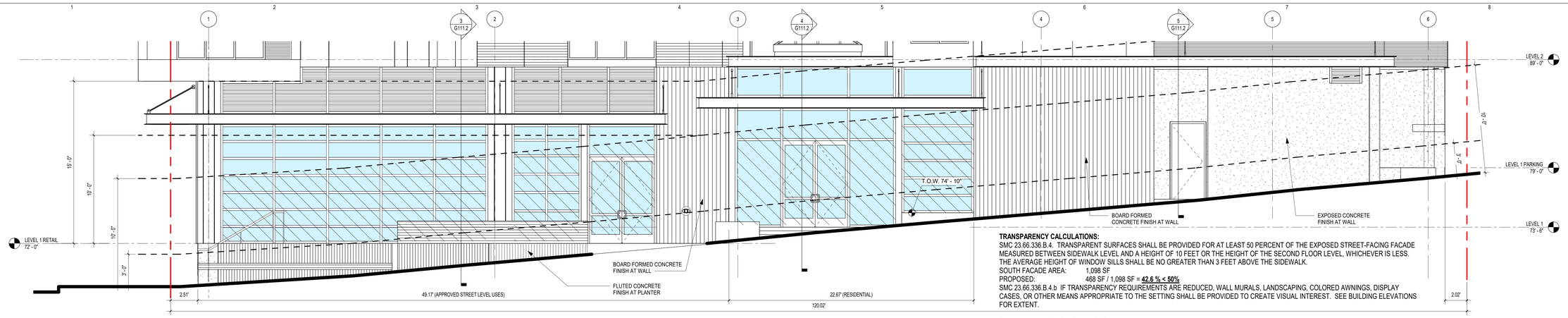

1 FACADE CALCULATIONS - SOUTH ELEVATION

1/4" = 1'-0"

TRANSPARENCY CALCULATIONS:
SMC 23.66.336.B.4. TRANSPARENT SURFACES SHALL BE PROVIDED FOR AT LEAST 50 PERCENT OF THE EXPOSED STREET-FACING FACADE MEASURED BETWEEN SIDEWALK LEVEL AND A HEIGHT OF 10 FEET OR THE HEIGHT OF THE SECOND FLOOR LEVEL, WHICHEVER IS LESS. THE AVERAGE HEIGHT OF WINDOW SILLS SHALL BE NO GREATER THAN 3 FEET ABOVE THE SIDEWALK.
SOUTH FACADE AREA: 1,098 SF
PROPOSED: 468 SF / 1,098 SF = **42.6 % < 50%**
SMC 23.66.336.B.4.b IF TRANSPARENCY REQUIREMENTS ARE REDUCED, WALL MURALS, LANDSCAPING, COLORED AWNINGS, DISPLAY CASES, OR OTHER MEANS APPROPRIATE TO THE SETTING SHALL BE PROVIDED TO CREATE VISUAL INTEREST. SEE BUILDING ELEVATIONS FOR EXTENT.

STREET LEVEL USE CALCULATIONS:
SMC 23.66.326.D.1, STREET-LEVEL USES SHALL NOT EXCEED 145 FEET OF STREET FRONTAGE PER USE IF LOCATED ON A CORNER.
PROPOSED: **49.17' < 145.0'**

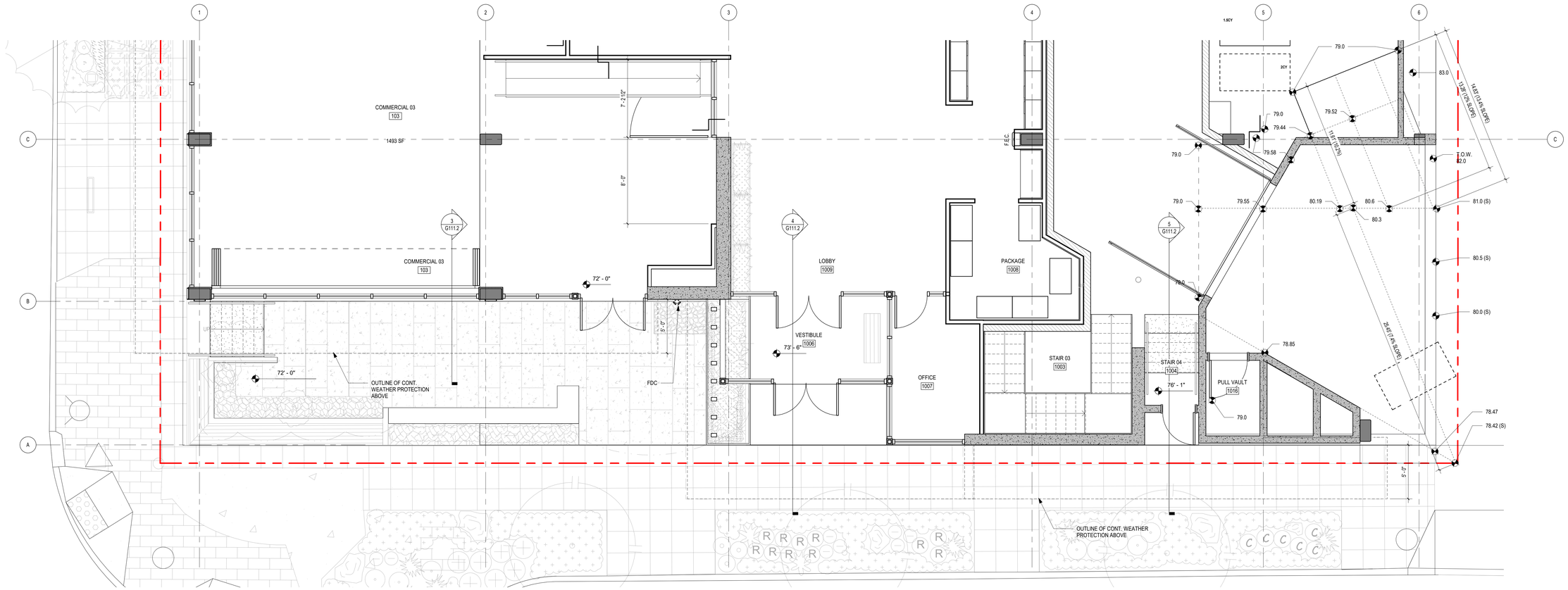

2 FACADE CALCULATIONS - LEVEL 1 PLAN - SOUTH

1/4" = 1'-0"

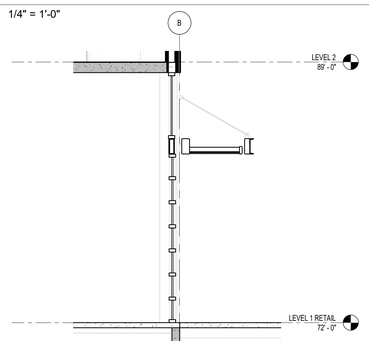

3 CANOPY SECTION - SOUTH 01

1/4" = 1'-0"

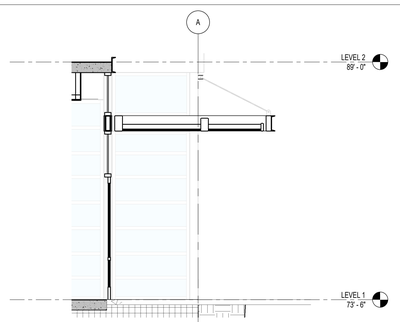

4 CANOPY SECTION - SOUTH 02

1/4" = 1'-0"

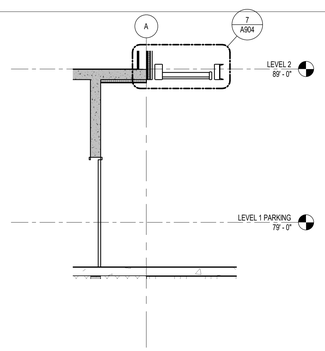

5 CANOPY SECTION - SOUTH 03

1/4" = 1'-0"

LINK
LINK DESIGN GROUP LLC.
439 Kirkland Way
Kirkland, WA. US. 98033
+1.425.298.0080
602 Pengjiang RD, E461 ShangHai, China 200072
上海市静安区彭江路602号E园461室 邮编 200072
+86.21.6667.0228

Project No: Enter Client Supplied Number
XXXXXXXXXX

Client/Owner/Project Address

Owner
VIBRANT CITIES
606 Maynard Ave S
Suite 251
Seattle, WA 98104

Consultant

BLOSSOM APARTMENTS - COA SUBMITTAL

Issue Drawing Log

	09/04/20	INITIAL PRICING SET
	01/21/21	PERMIT SET SUBMITTAL
	03/05/21	COA SUBMITTAL

Professional Certification - I certify that these documents were prepared or approved by me, and that I am a duly licensed Architect under the laws of the state of Washington, License number _____, Expiration date _____.

8628 REGISTERED ARCHITECT
JENNY LI
STATE OF WASHINGTON

SDCI APPROVAL STAMP

©LINK DESIGN GROUP LLC.
All rights reserved. No part of this document may be reproduced in any form or by any means without permission in writing from LINK DESIGN GROUP LLC.

PROJECT NUMBER	20-0108A
PROJECT MANAGER	JX
DRAWN BY	DS, MB

Sheet Identification

EXTERIOR BUILDING FINISHES DIAGRAMS

G111.2

N.W. 1/4, SECTION. 5, TOWNSHIP. 24 N., RANGE. 4 E., W.M.

STATEMENT OF TOPOGRAPHIC MAP ELEMENTS (WAC 332-130-145)

2(B) PURPOSE: CIVIL ENGINEERING DESIGN.

2(C) CONTOUR SOURCE: CONTOURS DERIVED FROM DIRECT FIELD OBSERVATIONS

2(F) CONTOUR ACCURACY: COMPLIES WITH UNITED STATES NATIONAL MAP ACCURACY STANDARDS (90% OR GREATER OF ALL SURVEY POINTS CHECKED ARE CORRECT WITHIN HALF OF ONE CONTOUR INTERVAL).

2(G) LIMITATIONS: THIS TOPOGRAPHIC SURVEY IS TO SUPPORT SPECIFIC EFFORTS WITHIN THE AREA OF MAPPING SHOWN.

2(H) BOUNDARY SOURCE: FIELD SURVEY OF CONTROLLING MONUMENTS, AND CONSIDERATION OF EXISTING RECORDS OF SURVEYS FOR DETERMINING ON THE GROUND POSITIONS OF DEEDED PROPERTY AND EASEMENT LINES.

3(A) & 3(B) UTILITIES: UNDERGROUND UTILITIES ARE SHOWN BY ONE OR MORE OF THE FOLLOWING METHODS:

1. SURVEY FIELD OBSERVATION OF MARKINGS PRODUCED BY DIRECT UTILITY DETECTION WORK.
2. DIRECT OBSERVATIONS OF UNDERGROUND, GRAVITY FLOW PIPES PERFORMED AT VISIBLE CONTROLLING STRUCTURES.
3. SCALING OF AS-BUILTS, DESIGN DRAWINGS OR OTHER RECORDS.

3(C) SCOPE STATEMENT: AGREED UPON SCOPE BETWEEN PROJECT OWNER/AGENT AND SURVEYOR IS TO PROVIDE A COMPLIANT TOPOGRAPHIC SURVEY.

HORIZONTAL BENCHMARKS:

OWNER: CITY OF SEATTLE
DESCRIPTION: 2" BRASS DISC WITH PUNCH, MONUMENT IN CASE, DOWN 0.6'
LOCATION: INTERSECTION OF CENTERLINES OF 5TH AVENUE SOUTH AND SOUTH MAIN STREET
NORTHING: 222454.05
EASTING: 1271761.48

OWNER: CITY OF SEATTLE
DESCRIPTION: 3/8" ROD WITH PUNCHED, MONUMENT IN CASE, DOWN 0.8'
LOCATION: INTERSECTION OF CENTERLINES OF 6TH AVENUE SOUTH AND SOUTH MAIN STREET
NORTHING: 222447.00
EASTING: 1272088.21

VERTICAL BENCHMARKS:

ID NO.: 3663-24A
DESCRIPTION: 2" BRASS DISC
ELEVATION: 51.80 FT.
LOCATION: SET 1 FOOT NORTH OF THE INTERSECTION OF BACK OF CONCRETE WALK AND 12 FEET WEST AND 11 FEET SOUTH OF CURB FACES AT THE SOUTHWEST CORNER OF THE INTERSECTION OF SOUTH KING STREET AND 6TH AVENUE SOUTH.

ID NO.: 3663-24B
DESCRIPTION: 2" BRASS DISC
ELEVATION: 48.14 FT.
LOCATION: SET AT THE INTERSECTION OF THE BACK OF CONCRETE WALK 19 FT. WEST OF THE CURB FACE AT THE SOUTHWEST CORNER OF THE INTERSECTION OF SOUTH JACKSON STREET AND 5TH AVENUE SOUTH.

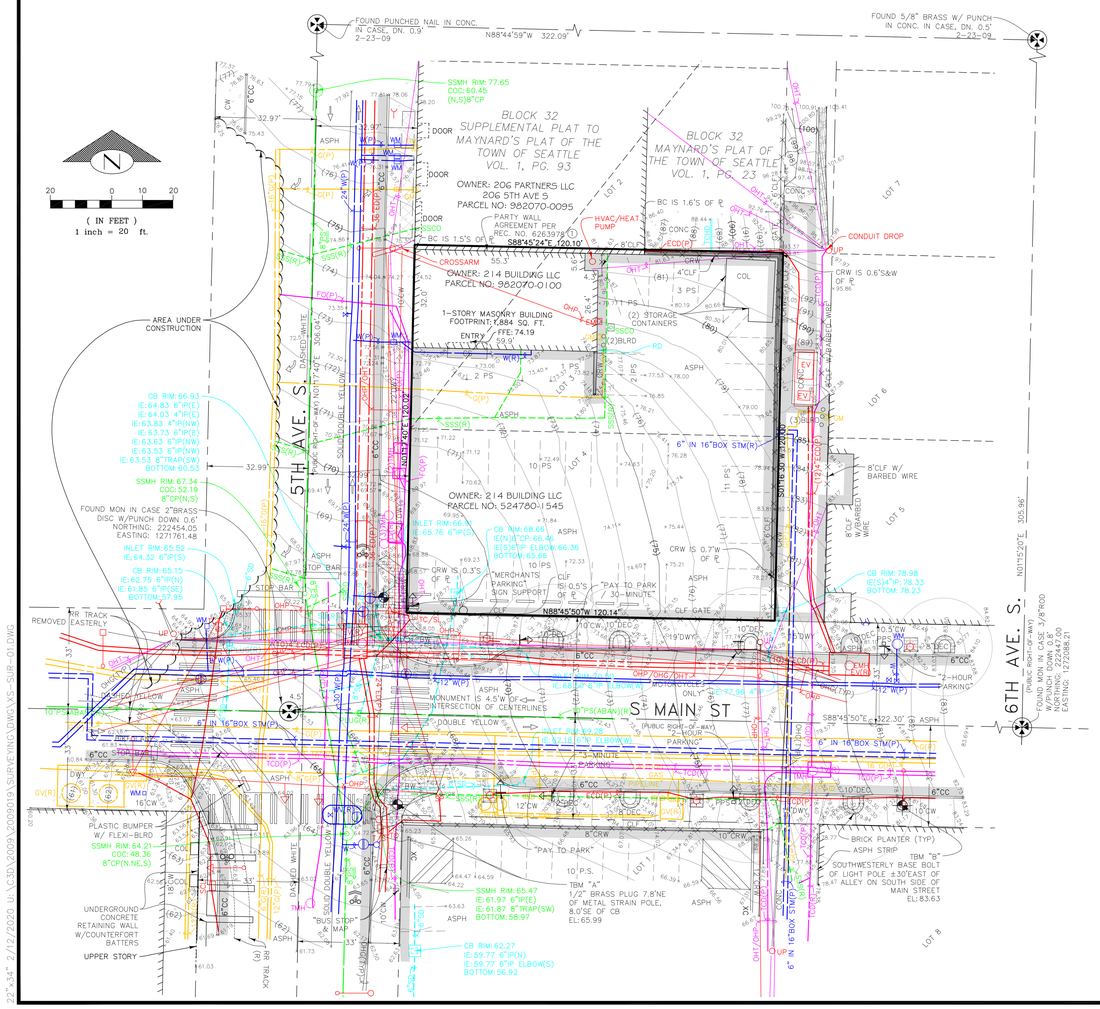

SITE NOTES

SITE ADDRESS:
214 5TH AVENUE S.
SEATTLE, WA 98104

TAX ACCOUNT NO.:
982070010003
5247801545O5

ZONING:
IDR 45/125-270

ZONING AGENCY:
CITY OF SEATTLE
SEATTLE DEPARTMENT OF CONSTRUCTION AND INSPECTIONS
700 5TH AVENUE, SUITE 2000
SEATTLE, WA 98104
(206) 684-8600

SETBACKS:
CURRENT SETBACK REQUIREMENTS SUBJECT TO SITE PLAN REVIEW. CURRENT SETBACKS MAY DIFFER FROM THOSE IN EFFECT DURING DESIGN/CONSTRUCTION OF EXISTING IMPROVEMENTS.

THE ISSUANCE OF A CERTIFICATE OF OCCUPANCY BY THE GOVERNING JURISDICTION INDICATES THAT STRUCTURES ON THIS PROPERTY COMPLIED WITH MINIMUM SETBACK AND HEIGHT REQUIREMENTS FOLLOWING CONSTRUCTION.

FLOOD ZONE:
THIS SITE APPEARS ON NATIONAL FLOOD INSURANCE RATE MAP, DATED MAY 16, 1995, COMMUNITY PANEL NO. 53033C0630F, AND IS SITUATED IN ZONE "X", AREA DETERMINED TO BE OUTSIDE THE 500-YEAR FLOODPLAIN.

HORIZONTAL DATUM:
NAD 83/2011 (EPOCH 2010.00)

VERTICAL DATUM:
NAVD 88

AREA:
SITE AS SHOWN CONTAINS 14,416 SQUARE FEET OR 0.3309 ACRES, MORE OR LESS.

PARKING SPACE COUNT:
PARKING SPACES TOTAL 40, INCLUDING 0 DISABLED PARKING SPACES.

SUBSTRUCTURES:
BURIED UTILITIES ARE SHOWN AS INDICATED ON RECORDS MAPS FURNISHED BY OTHERS AND VERIFIED WHERE POSSIBLE BY FEATURES LOCATED IN THE FIELD. WE ASSUME NO LIABILITY FOR THE ACCURACY OF THOSE RECORDS. FOR THE FINAL LOCATION OF EXISTING UTILITIES IN AREAS CRTICAL TO DESIGN CONTACT THE UTILITY OWNER/AGENCY.

TELECOMMUNICATIONS/FIBER OPTIC DISCLAIMER:
RECORDS OF UNDERGROUND TELECOMMUNICATIONS AND/OR FIBER OPTIC LINES ARE NOT ALWAYS AVAILABLE TO THE PUBLIC. BRH HAS NOT CONTACTED EACH OF THE MANY COMPANIES, IN THE COURSE OF THIS SURVEY, WHICH COULD HAVE UNDERGROUND LINES WITHIN ADJACENT RIGHTS-OF-WAY. THEREFORE, BRH DOES NOT ACCEPT RESPONSIBILITY FOR THE EXISTENCE OF UNDERGROUND TELECOMMUNICATIONS/FIBER OPTIC LINES WHICH ARE NOT MADE PUBLIC RECORD WITH THE LOCAL JURISDICTION. AS ALWAYS, CALL 1-800-424-5555 BEFORE CONSTRUCTION.

UTILITY PROVIDERS:
SANITARY SEWER AND STORM DRAINAGE:
SEATTLE PUBLIC UTILITIES
PROJECT MANAGEMENT AND ENGINEERING
700 5TH AVENUE
PO BOX 34018
SEATTLE, WA 98124-4018
(206) 233-7900

WATER:
SEATTLE PUBLIC UTILITIES
700 5TH AVENUE, SUITE 4900
PO BOX 34018
SEATTLE, WA 98124-4018
(206) 684-3000

POWER:
SEATTLE CITY LIGHT
700 5TH AVENUE, SUITE 3200
SEATTLE, WA 98124-4023
(206) 684-3000

NATURAL GAS:
PUGET SOUND ENERGY
10885 NE 4TH STREET, SUITE 1200
PO BOX 97034
BELLEVUE, WA 98009-9734
(425) 454-6363
(888) 225-5773

TELEPHONE:
CENTURY LINK
1600 7TH AVENUE
SEATTLE, WA 98191
(800) 244-1111

DESCRIPTION:
BEGINNING AT THE INTERSECTION OF THE EAST LINE OF FIFTH AVENUE SOUTH, FORMERLY 6TH STREET, WITH THE NORTH LINE OF LOT 3, BLOCK 32, SUPPLEMENTAL PLAT TO MAYNARD'S PLAT OF THE TOWN OF SEATTLE, ACCORDING TO THE PLAT THEREOF RECORDED IN VOLUME 1 OF PLATS, PAGE 93, IN KING COUNTY, WASHINGTON;

THENCE EAST ALONG SAID NORTH LINE OF SAID LOT 3, AND SAID NORTH LINE PRODUCED, TO AN INTERSECTION WITH THE WEST LINE OF THE ALLEY IN BLOCK 32 OF TOWN OF SEATTLE, AS LAID OUT BY D.S. MAYNARD (COMMONLY KNOWN AS D.S. MAYNARD'S PLAT OF SEATTLE), ACCORDING TO THE PLAT THEREOF RECORDED IN VOLUME 1 OF PLATS, PAGE 23, IN KING COUNTY, WASHINGTON;
THENCE SOUTH ALONG THE WEST LINE OF SAID ALLEY 60 FEET;
THENCE WEST AT RIGHT ANGLES, TO THE SAID EAST LINE OF FIFTH AVENUE SOUTH, FORMERLY 6TH STREET;
THENCE NORTH TO BEGINNING;

(SOMETIMES KNOWN AND DESCRIBED AS LOT 3, BLOCK 32, MAYNARD'S PLAT OF THE TOWN OF SEATTLE);

TOGETHER WITH LOT 4, BLOCK 32, D.S. MAYNARD'S PLAT OF THE TOWN OF SEATTLE, ACCORDING TO THE PLAT THEREOF RECORDED IN VOLUME 1 OF PLATS, PAGE 23, IN KING COUNTY, WASHINGTON.

TITLE REPORT REFERENCE:
THIS SURVEY WAS CONDUCTED ACCORDING TO THE DESCRIPTION SHOWN, FURNISHED BY CHICAGO TITLE INSURANCE COMPANY, COMMITMENT NO. 194539-SC, DATED NOVEMBER 1, 2019. THE EASEMENTS SHOWN OR NOTED HEREON RELATE TO THIS COMMITMENT.

NOTE: EASEMENTS CREATED OR RESCINDED AFTER THIS DATE ARE NOT SHOWN OR NOTED HEREON.

TITLE REPORT SCHEDULE B EXCEPTIONS:
ITEMS CIRCLED ARE SHOWN ON MAP.

1. PARTY WALL AGREEMENT, INCLUDING THE TERMS AND PROVISIONS THEREOF:
   EXECUTED BY: ALDA M. FRANCE, AS HER SEPARATE ESTATE
   AND: LORNTY INVESTMENT COMPANY, A WASHINGTON CORPORATION
   RECORDING DATE: NOVEMBER 13, 1967
   RECORDING NO.: 6263978
2. LAND USE PROVISIONS, BUILDING REQUIREMENTS, REHABILITATION STANDARDS AND OTHER MATTERS AFFECTING SAID PREMISES IDENTIFIED AS LYING WITHIN AND A PART OF THE PIONEER SQUARE PRESERVATION DISTRICT AND THE INTERNATIONAL SPECIAL REVIEW DISTRICT, PURSUANT TO ORDINANCE NUMBER 112134 OF THE CITY OF SEATTLE, A CERTIFIED COPY OF WHICH WAS RECORDED MARCH 14, 1985 UNDER RECORDING NUMBER 8503140774.
   *SURVEYOR'S NOTE: NOT A SURVEY MATTER

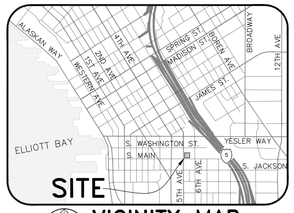

VICINITY MAP
NO SCALE

LEGEND

⊕	AREA DRAIN
ABAN/RET	ABANDONED/RETIRED
	ASPHALT (ASPH)
BLRD	BOLLARD
	BRICK SURFACE
	BUILDING LINE
BC	BUILDING CORNER
BR	BIKE RACK
	CANOPY
	CATCH BASIN (CB)
	CONCRETE SURFACE
CW/BW	CONCRETE/BRICK WALK
CRW/RRW	CONCRETE/WOOD RETAINING WALL
CC/XC	CONCRETE/EXTRUDED CURB
CP/IP	CONCRETE/IRON PIPE
	CHAIN LINK FENCE (CLF)
COL	COLUMN
℄/M	CENTERLINE/MONUMENT LINE
CS/WS	CONCRETE/WOOD STAIRS
CON	CONIFEROUS TREE
DEC	DECIDUOUS TREE
CMP	CORRUGATED METAL PIPE
C.O.C.	CENTER OF CHANNEL
DWY	DRIVEWAY
ECD	ELECTRICAL CONDUIT
ED	ELECTRICAL DUCT
EHH	ELECTRICAL HANDHOLE
EMH	ELECTRICAL MANHOLE
EM	ELECTRICAL METER
EV/ET	ELECTRICAL VAULT/TRANSFORMER
	FOUND SURVEY MONUMENT (AS NOTED)
	FIRE HYDRANT
	FIRE DEPT. CONNECTION (FDC)
FO	FIBER OPTICS
FOMH	FIBER OPTIC MANHOLE
FFE	FINISH FLOOR ELEVATION
G	GAS MAIN
GM	GAS METER
GV	GAS VALVE
GV	GAS VAULT
GP	GUY ANCHOR
GP	GUY POLE
SP	STRAIN POLE
ICB	IRRIGATION CONTROL BOX
IV	IRRIGATION VALVE
IE	INVERT ELEVATION
	LIGHT POLE (METAL)
	LIGHT POLE (WOOD)
	STRAIN POLE W/ LIGHT
	LIGHT POLE (DECORATIVE)
LSCAPE/PA	LANDSCAPE/PLANTER
	MANHOLE
MW	MONITOR WELL
OHP/OHT	OVERHEAD POWER/TELEPHONE
OHG/OHB	OVERHEAD GUYWIRE/BUS (TROLLEY)
P.S.	PARKING SPACE(S)
ℙ	PROPERTY LINE (PL)
(P)	PAINTED UTILITY LOCATION
	PIPE FLOW DIRECTION
PE	POLYETHYLENE
PPS	PARKING PAY STATION
PS/PSS	COMBINED/SANITARY SEWER
PSD	STORM DRAIN
	PEDESTRIAN PUSH BUTTON (PPB)
	PEDESTRIAN SIGNAL/PEDESTAL
(R)	RECORD DATA
	GRAVEL SURFACE
	ROCKERY
RE	ROOF ELEVATION
SD	SERVICE DRAIN (STORM)
CO	CLEANOUT
STM/V	STEAM LINE/VAULT
SSS	SANITARY SIDE SEWER (RECORD)
	SIGN/STREET NAME SIGN
TC/SL	TRAFFIC CONTROL/STREET LIGHT HANDHOLE
TCHD	TRENCH DRAIN
	TEMPORARY BENCHMARK (TBM)
TCD	TELEPHONE CONDUIT (BURIED)
TD	TELEPHONE DUCT
TV	TELEPHONE VAULT
TMH	TELEPHONE MANHOLE
TS	TELEPHONE SENTRY
	TRAFFIC FLOW DIRECTION
	TRAFFIC SIGNAL
TRCD	TRAFFIC SIGNAL CONDUIT (BURIED)
UP	UTILITY POLE (WOOD)
WV	WATER VAULT
W	WATER MAIN
WM	WATER METER
	WATER VALVE
	WATER GATE VALVE/CHAMBER
VO/CO	VACATION/CONDEMNATION ORDINANCE

BUSH, ROED & HITCHINGS, INC.
LAND SURVEYORS & CIVIL ENGINEERS
2009 MINOR AVE. EAST
SEATTLE, Washington
98102-3513
(206) 323-4144
1-800-935-0508
FAX# (206) 323-7135

NO	REVISION	DATE

BOUNDARY AND TOPOGRAPHIC SURVEY
VIBRANT CITIES
214 5TH AVENUE SOUTH
SEATTLE KING COUNTY WASHINGTON

drawn by	checked by
HAK	TRS
scale 1" = 20'	date 02/12/20
job no. 2009019.01	
sheet 1 of 1	

LINK
LINK DESIGN GROUP LLC.
439 Kirkland Way
Kirkland, WA. US. 98033
+1.425.298.0080
602 Pengjiang RD, E461 ShangHai, China 200072
上海市静安区彭江路602号E座461室 邮编 200072
+86.21.6667.0228

Project No: Enter Client Supplied Number
XXXXXXXXXX

Client/Owner/Project Address

Owner
VIBRANT CITIES
606 Maynard Ave S
Suite 251
Seattle, WA 98104

Consultant

02/12/20

BLOSSOM APARTMENTS - COA SUBMITTAL

Issue Drawing Log

	09/04/20	INITIAL PRICING SET
	01/21/21	PERMIT SET SUBMITTAL
	03/05/21	COA SUBMITTAL

Professional Certification - I certify that these documents were prepared or approved by me, and that I am a duly licensed Architect under the laws of the state of Washington, License number _____, Expiration date _____.

8628 REGISTERED ARCHITECT JENNY LI STATE OF WASHINGTON

SDCI APPROVAL STAMP

©LINK DESIGN GROUP LLC.
All rights reserved. No part of this document may be reproduced in any form or by any means without permission in writing from LINK DESIGN GROUP LLC.

PROJECT NUMBER	20-0108A
PROJECT MANAGER	JX
DRAWN BY	DS, MB

Sheet Identification

SRV

SRV

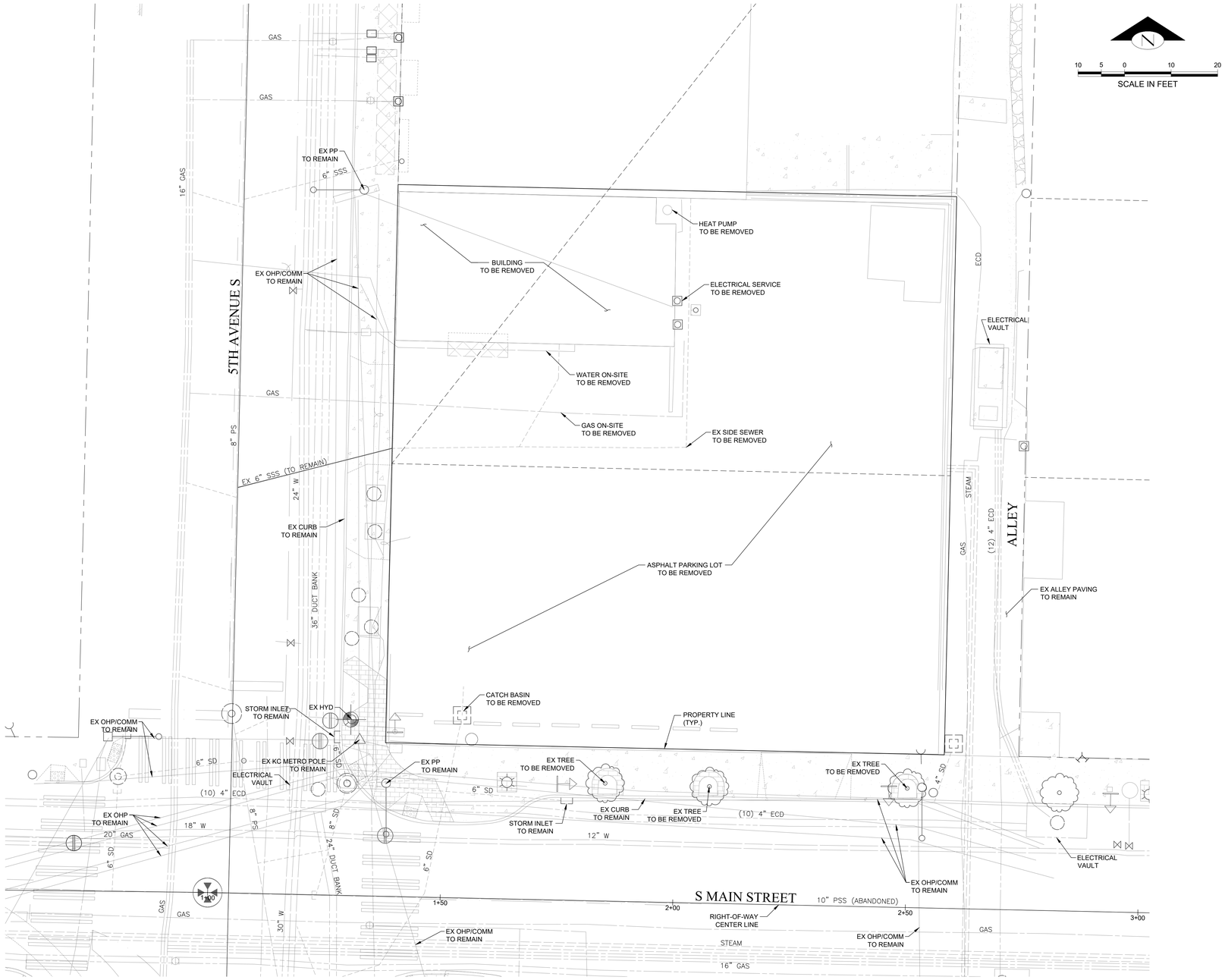

PREPARED BY GREEN LAKE ENGINEERING, LLC

LINK DESIGN GROUP LLC.
439 Kirkland Way
Kirkland, WA. US. 98033
+1.425.298.0080

602 Pengjiang RD, E461 ShangHai, China 200072
上海市静安区彭江路 602号E座461室 邮编 200072
+86.21.6667.0228

Project No: Enter Client Supplied Number
XXXXXXXXXX

Owner
VIBRANT CITIES
606 MAYNARD AVE S
SUITE 251
SEATTLE, WA 98104

Consultant

Green Lake Engineering, LLC
6045 4th Ave. NE, Seattle, WA 98115
Phone: 206-525-5332
email: bob.kehrli@greenlakeengineering.com
Contact : Bob Kehrli, PE

BLOSSOM APARTMENTS - 01.21.2021 PERMIT SET

-

Issue Drawing Log

	01/21/21	PERMIT SET

NOT FOR CONSTRUCTION

SDCI APPROVAL STAMP

PROJECT NUMBER	20-365-16
PROJECT MANAGER	RMK
DRAWN BY	RMK

Sheet Identification

DEMOLITION PLAN

C3.00

214 5TH AVENUE SOUTH, SEATTLE, WA 98104
MARCH 17, 2022
90% DESIGN

VICINITY MAP

SCALE: 1"=200'

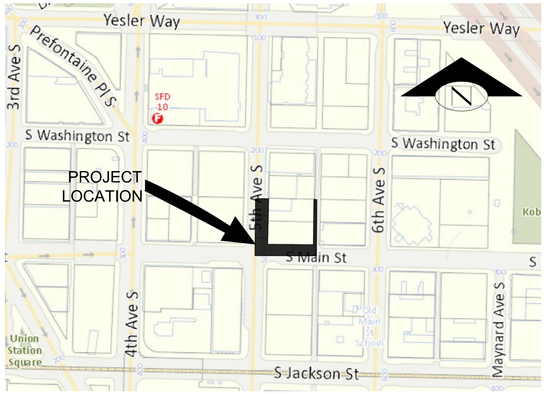

LEGAL DESCRIPTION

BEGINNING AT THE INTERSECTION OF THE EAST LINE OF FIFTH AVENUE SOUTH, FORMERLY 6TH STREET, WITH THE NORTH LINE OF LOT 3, BLOCK 32, SUPPLEMENTAL PLAT TO MAYNARD'S PLAT OF THE TOWN OF SEATTLE, ACCORDING TO THE PLAT THEREOF RECORDED IN VOLUME 1 OF PLATS, PAGE 93, IN KING COUNTY, WASHINGTON;

THENCE EAST ALONG SAID NORTH LINE OF SAID LOT 3, AND SAID NORTH LINE PRODUCED, TO AN INTERSECTION WITH THE WEST LINE OF THE ALLEY IN BLOCK 32 OF TOWN OF SEATTLE, AS LAID OUT BY D.S. MAYNARD (COMMONLY KNOWN AS D.S. MAYNARD'S PLAT OF SEATTLE), ACCORDING TO THE PLAT THEREOF RECORDED IN VOLUME 1 OF PLATS, PAGE 23, IN KING COUNTY, WASHINGTON;
THENCE SOUTH ALONG THE WEST LINE OF SAID ALLEY 60 FEET;
THENCE WEST AT RIGHT ANGLES, TO THE SAID EAST LINE OF FIFTH AVENUE SOUTH, FORMERLY 6TH STREET;
THENCE NORTH TO BEGINNING;

(SOMETIMES KNOWN AND DESCRIBED AS LOT 3, BLOCK 32, MAYNARD'S PLAT OF THE TOWN OF SEATTLE);

TOGETHER WITH LOT 4, BLOCK 32, D.S. MAYNARD'S PLAT OF THE TOWN OF SEATTLE, ACCORDING TO THE PLAT THEREOF RECORDED IN VOLUME 1 OF PLATS, PAGE 23, IN KING COUNTY, WASHINGTON.

VERTICAL DATUM

NAVD 88

HORIZONTAL DATUM

NAD 83/2011 (EPOCH 2010.00)

CONTACT INFORMATION

OWNER: WANG BROTHERS INVESTMENTS, LLC
ATTN: KEVIN WANG
2417 MARINER SQUARE LOOP, SUITE 247
ALAMEDA, CA 94501

ENGINEER: GREEN LAKE ENGINEERING, LLC
ATTN: ROBERT KEHRLI, PE
6045 4TH AVE. NE
SEATTLE, WA 98115
OFFICE NUMBER: 206-525-5332
BOB.KEHRLI@GREENLAKEENGINEERING.COM

SURVEYOR: BUSH, ROED & HITCHINGS, INC.
ATTN: TAYLOR SCHULTE
2009 MINOR AVE. E
SEATTLE, WA 98102
OFFICE NUMBER: (206) 323-4144

DATE	MARK	NATURE REVISIONS	MADE	CHK'D	REV'D

GENERAL NOTES

1. ALL WORK SHALL CONFORM TO THE 2020 EDITION OF CITY OF SEATTLE STANDARD SPECIFICATIONS, THE 2020 EDITION OF THE CITY OF SEATTLE STANDARD PLANS; AND SEATTLE DEPARTMENT OF TRANSPORTATION RIGHT-OF-WAY OPENING AND RESTORATION RULES (01-2017) FOR STREET AND SIDEWALK PAVEMENT OPENING AND RESTORATION . A COPY OF THESE DOCUMENTS SHALL BE ON SITE DURING CONSTRUCTION.
2. A COPY OF THE APPROVED PLAN MUST BE ON SITE WHENEVER CONSTRUCTION IS IN PROGRESS.
3. ERRORS AND OMISSIONS ON THE PERMITTED PLANS MUST BE CORRECTED BY THE ENGINEER AND APPROVED BY THE CITY OF SEATTLE.
4. ALL PERMITS REQUIRED FOR WORK WITHIN THE PUBLIC RIGHT OF WAY MUST BE OBTAINED PRIOR TO THE START OF CONSTRUCTION.
5. PRIOR TO THE START OF CONSTRUCTION WITHIN THE RIGHT OF WAY, THE PERMITTEE SHALL SCHEDULE AND ATTEND A PRECONSTRUCTION MEETING WITH THE CITY OF SEATTLE DEPARTMENT OF TRANSPORTATION.
6. PERMITTEE SHALL CONTACT SEATTLE DEPARTMENT OF TRANSPORTATION, STREET USE INSPECTOR A MINIMUM OF 2 BUSINESS DAYS PRIOR TO NEEDING AN INSPECTION.
7. ALL DAMAGE TO CITY INFRASTRUCTURE CAUSED BY THE CONSTRUCTION SHALL BE REPAIRED AS REQUIRED BY THE SEATTLE DEPARTMENT OF TRANSPORTATION.
8. THE APPROVED PLANS SHOW THE APPROXIMATE AREA OF PAVEMENT RESTORATION BASED ON THE DEPTH OF UTILITY CUTS AND/OR THE AREA OF CURB AND/OR PAVEMENT TO BE REMOVED AND REPLACED. THE ACTUAL LIMITS OF THE PAVEMENT RESTORATION SHALL BE PER THE STREET AND SIDEWALK PAVEMENT OPENING AND RESTORATION DIRECTOR'S RULE 01-2017 AND WILL BE DETERMINED IN THE FIELD BY THE SEATTLE DEPARTMENT OF TRANSPORTATION STREET USE INSPECTOR PRIOR TO THE PAVEMENT RESTORATION.
9. DATUM: NAVD 88 AND NAD83 (1991).
10. SURVEYING AND STAKING OF ALL IMPROVEMENTS IN THE PUBLIC RIGHT OF WAY SHALL BE COMPLETED PRIOR TO CONSTRUCTION. SURVEY CUT SHEETS MUST BE SUBMITTED AND APPROVED BY THE SEATTLE DEPARTMENT OF TRANSPORTATION AT LEAST 5 DAYS PRIOR TO CONSTRUCTION.
11. IF AN EXISTING CURB IS TO BE REMOVED AND REPLACED IN THE SAME LOCATION THE PERMITTEE SHALL PROVIDE THE STREET USE INSPECTOR A PLAN WITH EXISTING FLOW LINE AND TOP OF CURB ELEVATIONS IDENTIFIED. PERMITTEE TO STAKE THE LOCATION OF THE EXISTING CURB PRIOR TO DEMOLITION.
12. THE PERMITTEE SHALL BE RESPONSIBLE FOR REFERENCING AND REPLACING ALL MONUMENTS THAT MAY BE DISTURBED, DESTROYED OR REMOVED BY THE PROJECT AND SHALL FILE AN APPLICATION FOR PERMIT TO REMOVE OR DESTROY A SURVEY MONUMENT WITH THE WASHINGTON STATE DEPARTMENT OF NATURAL RESOURCES, PURSUANT TO RCW 58.24.040(8).
13. THE PERMITTEE SHALL SUBMIT ALL APPLICABLE DOCUMENTS REQUIRED UNDER SECTION 1-05.3 OF THE STANDARD SPECIFICATIONS PRIOR TO CONSTRUCTION. A MATERIAL SOURCE FORM FOR ALL MATERIALS TO BE PLACED IN THE RIGHT OF WAY AND MIX DESIGNS FOR ALL ASPHALT, CONCRETE AND AGGREGATES TO BE PLACED IN THE RIGHT OF WAY MUST BE SUBMITTED TO THE SEATTLE DEPARTMENT OF TRANSPORTATION FOR REVIEW AND APPROVAL PRIOR TO BEGINNING CONSTRUCTION. A REVISED MATERIAL SOURCE FORM AND MIX DESIGNS MUST BE SUBMITTED FOR REVIEW AND APPROVAL PRIOR TO PLACEMENT OF ANY SUBSTITUTE MATERIALS.
14. THE PERMITTEE SHALL NOTIFY THE SEATTLE FIRE DEPARTMENT DISPATCHER (206-386-1495) AT LEAST TWENTY-FOUR (24) HOURS IN ADVANCE OF ALL WATER SERVICE INTERRUPTIONS, HYDRANT SHUTOFFS, AND STREET CLOSURES OR OTHER ACCESS BLOCKAGE. THE PERMITTEE SHALL ALSO NOTIFY THE DISPATCHER OF ALL NEW, RELOCATED, OR ELIMINATED HYDRANTS RESULTING FROM THIS WORK.
15. THE PERMITTEE SHALL LOCATE AND PROTECT ALL CASTINGS AND UTILITIES DURING CONSTRUCTION.
16. THE PERMITTEE SHALL CONTACT THE UNDERGROUND UTILITIES LOCATOR SERVICE (1-800-424-5555) AT LEAST 48 HOURS PRIOR TO CONSTRUCTION.
17. IT IS THE SOLE RESPONSIBILITY OF THE PERMITTEE TO VERIFY THE ACCURACY OF ALL UTILITY LOCATIONS SHOWN AND TO FURTHER DISCOVER AND AVOID ANY OTHER UTILITIES NOT SHOWN WHICH MAY BE AFFECTED BY THE IMPLEMENTATION OF THIS PLAN.
18. THE PERMITTEE SHALL ADJUST ALL EXISTING MANHOLE RIMS, DRAINAGE STRUCTURE LIDS, VALVE BOXES, AND UTILITY ACCESS STRUCTURES TO FINISH GRADE WITHIN AREAS AFFECTED BY THE PROPOSED IMPROVEMENTS.
19. SPU-DWW MUST PERFORM ALL CORE DRILL OPERATIONS INTO EXISTING MAINS OR STRUCTURES. CONTRACTORS ARE NOT ALLOWED TO CORE INTO MAINS OR STRUCTURES WITHOUT PRIOR APPROVAL FROM SPU-DWW. TO SCHEDULE CORE CUTS CONTACT SPU-DWW AT 206-615-0511 A MINIMUM OF 48 HOURS IN ADVANCE.
20. UTILITY SERVICE CONNECTIONS SHOWN ON THIS PLAN REQUIRE SEPARATE PERMITS AND ARE TO BE MAINTAINED PRIVATELY AND NOT BY THE CITY OF SEATTLE.
21. THE PERMITTEE SHALL PROVIDE FOR ALL TESTING AS REQUIRED BY THE STREET USE INSPECTOR.
22. BACKFILL MATERIAL USED IN PUBLIC RIGHT-OF-WAY SHALL MEET STANDARD SPECIFICATIONS AND SHALL BE APPROVED BY SEATTLE DEPARTMENT OF TRANSPORTATION.
23. INSPECTION AND ACCEPTANCE OF ALL WORK IN THE PUBLIC RIGHT-OF-WAY SHALL BE DONE BY REPRESENTATIVES OF THE CITY OF SEATTLE. IT SHALL BE THE PERMITTEE'S RESPONSIBILITY TO COORDINATE AND SCHEDULE APPROPRIATE INSPECTIONS ALLOWING FOR PROPER ADVANCE NOTICE. THE SEATTLE DEPARTMENT OF TRANSPORTATION STREET USE INSPECTOR MAY REQUIRE REMOVAL AND RECONSTRUCTION OF ANY ITEMS PLACED IN THE RIGHT OF WAY THAT DO NOT MEET CITY STANDARDS OR THAT WERE CONSTRUCTED WITHOUT APPROPRIATE INSPECTIONS.
24. THE PERMITTEE SHALL PROVIDE AND MAINTAIN TEMPORARY EROSION CONTROL AND SEDIMENTATION COLLECTION FACILITIES TO ENSURE THAT SEDIMENT-LADEN WATER DOES NOT ENTER THE NATURAL OR PUBLIC DRAINAGE SYSTEM PER SECTION 8-01. AS CONSTRUCTION PROGRESSES AND UNEXPECTED (SEASONAL) CONDITIONS DICTATE, ADDITIONAL CONTROL FACILITIES MAY BE REQUIRED. DURING THE COURSE OF CONSTRUCTION IT SHALL BE THE OBLIGATION AND RESPONSIBILITY OF THE PERMITTEE TO ADDRESS ANY NEW CONDITIONS THAT MAY BE CREATED BY THE PERMITTEE'S ACTIVITIES AND TO PROVIDE ADDITIONAL FACILITIES THAT MAY BE NEEDED TO PROTECT ADJACENT PROPERTIES.
25. THE PERMITTEE SHALL KEEP ALL PAVED SURFACES IN THE RIGHT OF WAY CLEAN BY SWEEPING PER SECTION 8-01.3(16).
26. ALL DISTURBED SOILS MUST BE AMENDED PER STANDARD PLAN 142 AND SECTION 8-02 OF THE STANDARD SPECIFICATIONS UNLESS WITHIN ONE FOOT OF A CURB OR SIDEWALK, THREE FEET OF A UTILITY STRUCTURE (E.G. WATER METER, UTILITY POLE, HAND HOLE, ETC.), OR THE DRIPLINE OF AN EXISTING TREE.
27. ALL TRAFFIC CONTROL SHALL BE IN ACCORDANCE WITH THE CITY OF SEATTLE TRAFFIC CONTROL MANUAL FOR IN-STREET WORK. AN APPROVED TRAFFIC CONTROL PLAN WILL BE REQUIRED FOR ALL ARTERIAL STREETS PRIOR TO BEGINNING CONSTRUCTION.
28. PERMITTEE SHALL NOTIFY KING COUNTY METRO AT 684-2732 FOURTEEN DAYS IN ADVANCE OF ANY IMPACT TO TRANSIT OPERATIONS.
29. COORDINATE SIGN AND PAY STATION AND/OR PARKING METER HEAD REMOVAL AND INSTALLATION WITH SEATTLE DEPARTMENT OF TRANSPORTATION AT 684-5370. SIGNPOSTS ARE TO BE INSTALLED IN ACCORDANCE WITH STANDARD PLANS 616, 620, 621A, 621B, 625, & 626.
30. ALL STREET NAME SIGNS MUST BE INSTALLED BY SEATTLE DEPARTMENT OF TRANSPORTATION AT THE PERMITTEE'S EXPENSE.
31. ALL WORK PERFORMED BY SEATTLE CITY LIGHT, SEATTLE PUBLIC UTILITIES, AND OTHER UTILITIES TO REMOVE OR RELOCATE EXISTING UTILITIES SHALL BE DONE AT THE PERMITTEE'S EXPENSE.
32. PERMITTEE MUST CONTACT THE SEATTLE DEPARTMENT OF PARKS AND RECREATION TO APPLY FOR A SEPARATE PERMIT IF WORKING WITHIN A DESIGNATED PARK BOULEVARD.
33. CARE SHALL BE EXERCISED WHEN EXCAVATING NEAR EXISTING CHARGED WATER MAINS.
34. PERMITTEE SHALL CONTACT SEATTLE DEPARTMENT OF TRANSPORTATION, STREET USE INSPECTOR A MINIMUM OF 2 BUSINESS DAYS PRIOR TO PLANTING FOR INSPECTION OF STREET TREES AND LANDSCAPING.

SHEET INDEX

SHEET NUMBER	TITLE
1	COVER SHEET, NOTES & INDEX
2	S MAIN ST & 5TH AVE. S PLAN
3	LANDSCAPE PLAN
4	LANDSCAPE PLAN

WATER SERVICE NOTES

1. APPLICATION FOR A NEW METERED WATER SERVICE AND PAYMENT OF ALL FEES IS REQUIRED BEFORE SERVICE WILL BE AVAILABLE.
2. APPLICANT WILL NEED A WATER AVAILABILITY CERTIFICATE (WAC) AND LEGAL DESCRIPTION OF PROPERTY WHEN SUBMITTING THE APPLICATION. TO OBTAIN A WAC, PLEASE CONTACT THE DEVELOPMENT SERVICES OFFICE AT (206) 684-3333 OR SPUWATERAVAILABILITY@SEATTLE.GOV.
3. ALL WATER SERVICES SHALL BE LOCATED IN THE PUBLIC RIGHT OF WAY AND WITHIN THE FRONTAGE OF THE PARCEL BEING SERVED.
4. WATER SERVICES SERVING PARCELS WITHOUT FRONTAGE TO THE PUBLIC RIGHT OF WAY (SUCH AS UNIT LOT SUBDIVISIONS) OR LANDLOCKED PARCELS SHALL BE SERVED BY A PRIVATE WATER SERVICE EXTENDING FROM THE WATER METER TO THE PARCEL BEING SERVED. THE WATER SERVICE SHALL BE INSTALLED IN A DEDICATED EASEMENT. THE EASEMENT SHALL BE OBTAINED BY THE DEVELOPER, RECORDED, AND A COPY SHALL BE PROVIDED TO SEATTLE PUBLIC UTILITIES (SPU) AT THE TIME OF APPLICATION SUBMITTAL.
5. ALL WATER SERVICES PIPING ON PROPERTY MUST BE INSPECTED PRIOR TO BACKFILLING TRENCH. CONTACT (206) 684-5800 TO REQUEST AN INSPECTION.
6. CUSTOMERS ARE REQUIRED TO INSTALL AN APPROVED AIR GAP OR REDUCED-PRESSURE BACKFLOW ASSEMBLY (RPBA/RPDA) ON ALL WATER SERVICE CONNECTIONS POSING A HIGH HEALTH CROSS-CONNECTION HAZARD (PURSUANT TO WAC 246-290-490). BACKFLOW PREVENTION IS ALSO REQUIRED ON WATER SERVICE CONNECTIONS SUCH AS FIRE SERVICES, IRRIGATION SERVICES, BUILDINGS EXCEEDING THREE STORIES OR 30 FT. IN HEIGHT ABOVE THE METER (MEASURED TO THE HIGHEST WATER FIXTURE), AND MAY BE REQUIRED FOR OTHER WATER SERVICES. SPU AND KING COUNTY HEALTH DEPARTMENT (KCHD) ARE THE ADMINISTRATIVE AUTHORITIES ENGAGED IN A JOINT PROGRAM IDENTIFYING ACTUAL AND POTENTIAL CROSS-CONNECTIONS BETWEEN THE PUBLIC WATER SUPPLY AND POSSIBLE SOURCES OF CONTAMINATION. FOR ANSWERS TO SPECIFIC CROSS-CONNECTION CONTROL QUESTIONS OR TO REQUEST AN INSPECTION, PLEASE CALL (206) 684-3536.

STREET LIGHTING GENERAL NOTES

1. ALL DISCONNECTIONS, TEMPORARY OR FINAL SERVICE CONNECTIONS WILL BE MADE BY SEATTLE CITY LIGHT (SCL) AT PROJECT'S EXPENSE. COORDINATE ALL ENERGIZING AND DE-ENERGIZING OF STREET LIGHTING SERVICE WITH SCL ELECTRICAL SERVICE REPRESENTATIVE AND STREETLIGHT ENGINEER FIFTEEN (15) WORKING DAYS IN ADVANCE. ADDITIONAL TIME MAY BE NEEDED FOR CREW SCHEDULING AND MOBILIZATION.
2. CONTRACTOR MUST MAKE PRIOR COORDINATION FOR FLOOD OR STREETLIGHT REMOVAL. CONTRACTOR MUST MAKE PRIOR DELIVERY COORDINATION FOR SALVAGED STREETLIGHT-RELATED MATERIALS TO SEATTLE CITY LIGHT SALVAGE YARD AT 4TH AVE S & S SPOKANE ST, 98134. CONTACT SALVAGE COORDINATOR AT 206-386-1765. NO ARTERIAL STREETLIGHT MAY BE DISABLED WITHOUT PRIOR APPROVAL FROM SEATTLE DEPARTMENT OF TRANSPORTATION (SDOT).
3. EXISTING STREET LIGHTING SYSTEM SHALL BE MAINTAINED DURING CONSTRUCTION.
4. WORK MUST BE SCHEDULED SUCH THAT NO TWO (2) ADJACENT OR OPPOSITE STREETLIGHTS ARE DISABLED AT ANY ONE TIME.
5. ANY EXCAVATION IN PROXIMITY TO AN EXISTING STREETLIGHT POLE MUST BE DONE WITHOUT UNDERMINING ITS STABILITY. CONTRACTOR IS RESPONSIBLE FOR TEMPORARY STABILIZING SUPPORT.
6. ALL WORK SHALL CONFORM TO SEATTLE CITY LIGHT (SCL) CURRENT STANDARDS ONCE CONSTRUCTION COMMENCES.
7. INSTALLATION OF UNDERGROUND STREETLIGHT SYSTEMS, AND STREETLIGHT SYSTEM GROUNDING AND BONDING MUST BE PER SEATTLE CITY LIGHT (SCL) CONSTRUCTION STANDARD 1714.50.
8. ALL WIRING, INCLUDING STREET LIGHTING, PEDESTRIAN LIGHTING AND FESTOON LIGHTING CIRCUITS MUST BE CLEARLY LABELED PER SEATTLE CITY LIGHT (SCL) CONSTRUCTION STANDARD 1714.10.
9. EACH LUMINAIRE MUST BE FUSED PER (SCL) CONSTRUCTION STANDARD 1730.00.
10. STREETLIGHT HANDHOLE AND CONDUIT REQUIREMENTS MUST CONFORM TO SCL CONSTRUCTION STANDARD 1716.07.
11. PULL TAPE MUST BE INSTALLED THROUGH VACANT CONDUIT AND CAPPED PER (SCL) CONSTRUCTION STANDARD U2-11.40/NDK-40.
12. MAINTAIN MINIMUM HORIZONTAL & VERTICAL CLEARANCES BETWEEN SCL UNDERGROUND STRUCTURES AND VARIOUS OTHER UTILITY STRUCTURES PER SCL CONSTRUCTION STANDARD 0214.00.
13. FOR STREET LIGHTING INSPECTIONS CONTACT SCL ELECTRICAL REVIEWER TEN (10) WORKING DAYS IN ADVANCE.
14. CONTRACTOR MUST CALL FOR AN ELECTRICAL REVIEWER INSPECTION OF THE STREET LIGHTING SYSTEM AT VARIOUS STAGES OF INSTALLATION/CONSTRUCTION OR AS INSTRUCTED BY THE SCL INSPECTOR.
15. CONTRACTOR MUST PROVIDE AN OPERATOR AND MAN LIFT TRUCK FOR USE DURING INSPECTION OF INSTALLED STREETLIGHT FACILITIES.
16. CONTRACTOR MUST ASSIST THE INSPECTOR DURING INSPECTIONS, COMMISSIONING, AND FINAL CONNECTION PHASES OF THE PROJECT AS INSTRUCTED BY THE INSPECTOR. SUCH ASSISTANCE WILL INCLUDE, BUT NOT BE LIMITED TO OPENING HANDHOLES, MANHOLES AND VARIOUS ACCESS COVERS, DISCONNECTING AND RECONNECTING FUSE HOLDERS AND MECHANICAL SPLICE CONNECTIONS, VERIFYING CONDUIT RUNS, ETC.
17. PRIOR TO REQUESTING FINAL STREETLIGHT SERVICE CONNECTION, CONTRACTOR MUST CORRECT ALL PUNCH LIST ITEMS AND CALL FOR A RE-INSPECTION WHERE REQUIRED BY THE INSPECTOR. CONTRACTOR MUST PREPARE A SIGNED AS-BUILT AND WIRING DIAGRAM WHICH INCLUDES WHICH DUCT IS USED IN EACH DUCT BANK.

SDCI PROJECT #6777621-CN CALL 811 BEFORE YOU DIG

90% Complete Street Improvement Plan - NOT FOR CONSTRUCTION

ROBERT M. KEHRLI STATE OF WASHINGTON 48089 REGISTERED PROFESSIONAL ENGINEER

Green Lake Engineering, LLC
6045 4th Ave. NE, Seattle, WA 98115
Phone: 206-525-5332
email: bob.kehrli@greenlakeengineering.com
Contact : Bob Kehrli, PE

REVIEWED BY SPU/WATER ENGINEERING	NAME OR INITIALS AND DATE	INITIALS AND DATE
..... 20....	DESIGNED RMK 03-17-22	REVIEWED: .....
REVIEWED BY SPU/DRAINAGE	CHECKED RMK 03-17-22	PROJECT MANAGER
..... 20....	DRAWN RMK 03-17-22	
APPROVED BY SDOT STREET IMPROVEMENT PERMITTING	CHECKED RMK 03-17-22	
..... 20....	DESIGN REVIEW	REVISED AS-BUILT.....

All work done in accordance with the City of Seattle Standard Plans and Specifications in effect on the date shown above, and supplemented by Special Provisions.

City of Seattle
Seattle Department of Transportation

SCALE: H. V. INSPECTORS'S BOOK

214 5TH AVENUE SOUTH
STREET IMPROVEMENTS
COVER SHEET, NOTES & INDEX

SDOT PROJECT NO. SUSIP0000004
VAULT PLAN NO.
VAULT SERIAL NO.
SHEET 1 OF 4

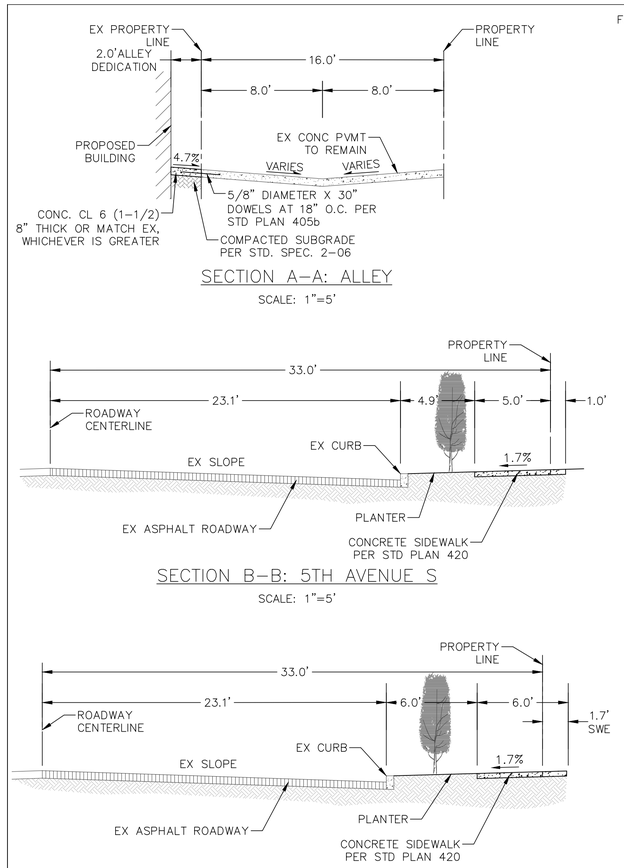

NOTES

1. CURB SHALL MATCH EXISTING HEIGHT AND ADJACENT CURB AT INTERFACE WITH THE EXISTING CURB.
2. THE CONTRACTOR SHALL PROTECT EXISTING PAVEMENT TO REMAIN. IF THE ROADWAY SURFACE IS DISTURBED DURING CONSTRUCTION THE CONTRACTOR SHALL COORDINATE RESTORATION LIMITS WITH THE RIGHT-OF-WAY OPENING AND RESTORATION RULES (01-2017) AND THE SDOT STREET-USE INSPECTOR.
3. ASPHALT ROADWAY PAVEMENT SHALL PE PER COS STANDARD DETAIL 401D: 3" HMA (CL 1/2") OVER 6" TYPE 2 MINERAL AGGREGATE.
4. SOILS IN ROW PLANTING AREAS SHALL BE AMENDED PER COS STANDARD PLAN 142.
5. REMOVAL OF EXISTING TREES ALONG THE PROJECTS FRONTAGE IN SOUTH MAIN STREET WILL REQUIRE APPROVAL FROM URBAN FORESTRY.

DATE	MARK	NATURE REVISIONS	MADE	CHK'D	REV'D

90% Complete Street Improvement Plan - NOT FOR CONSTRUCTION

SDCI PROJECT #6777621-CN

CALL 811 BEFORE YOU DIG

ROBERT M. KEHRLI — STATE OF WASHINGTON — 48089 — REGISTERED PROFESSIONAL ENGINEER

Green Lake Engineering, LLC
6045 4th Ave. NE, Seattle, WA 98115
Phone: 206-525-5332
email: bob.kehrli@greenlakeengineering.com
Contact : Bob Kehrli, PE

REVIEWED BY SPU/WATER ENGINEERING	20....
REVIEWED BY SPU/DRAINAGE	20....
APPROVED BY SDOT STREET IMPROVEMENT PERMITTING	20....

NAME OR INITIALS AND DATE			INITIALS AND DATE
DESIGNED	RMK	03-17-22	REVIEWED:
CHECKED	RMK	03-17-22	
DRAWN	RMK	03-17-22	PROJECT MANAGER
CHECKED	RMK	03-17-22	
DESIGN REVIEW			REVISED AS-BUILT

All work done in accordance with the City of Seattle Standard Plans and Specifications in effect on the date shown above, and supplemented by Special Provisions.

City of Seattle
Seattle Department of Transportation

SCALE: H. V. INSPECTORS'S BOOK

214 5TH AVENUE SOUTH
STREET IMPROVEMENTS
S MAIN ST. AND 5TH AVE. S PLAN

SDOT PROJECT NO. SUSIP0000004
VAULT PLAN NO.
VAULT SERIAL NO.
SHEET 2 OF 4

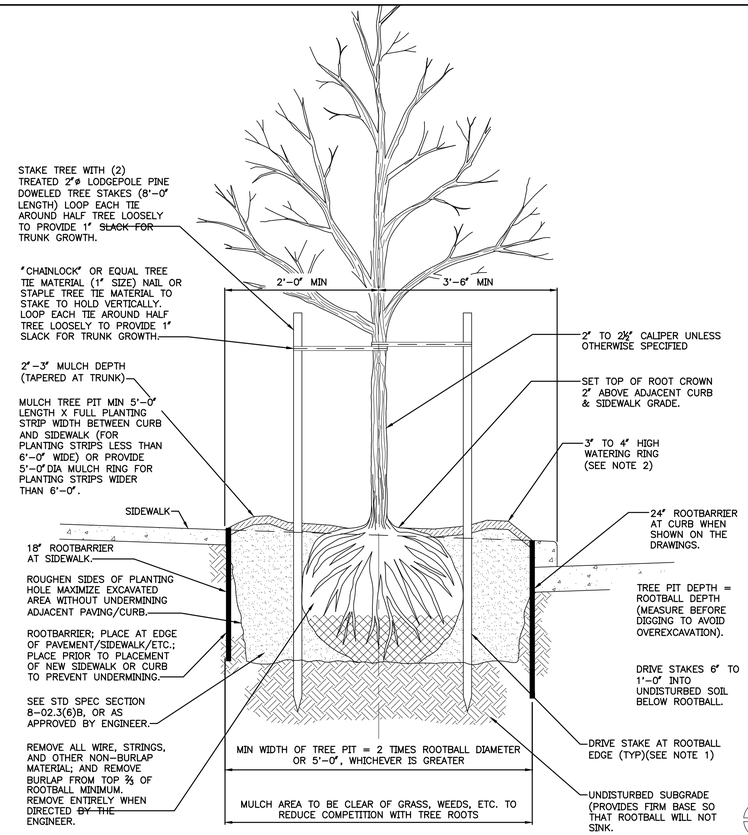

PLANT LIST STREET TREES

BLOSSOM April 19, 2022

QUAN	SYMBOL	PLANT NAME	SIZE
3	STX	STYRAX JAPONICA/ JAPANESE SNOWDROP TREE	2.5 " CAL. B/B, Street Tree to conform to SDOT Standards
3	NYS	NYSSA SYLVATICA RED RAGE/ RED RAGE TUPELO	2.5 " CAL. B/B, Street Tree to conform to SDOT Standards

100 LANDSCAPE PLANTING

STANDARD PLAN NO **100a**

REV DATE: JAN 2017

REF STD SPEC SEC 8-02

NOTES:

1. REMOVE STAKES ONE YEAR AFTER INSTALLATION.
2. SHAPE SOIL SURFACE TO PROVIDE 4' DIA WATERING RING.
3. TREE CLEARANCE MUST BE PER STD PLAN NO 030.
4. SEE STD PLAN NO 424 FOR TREE PIT DETAIL.
5. ADJUST TREE TIES DURING ESTABLISHMENT TO ALLOW ROOM FOR GROWTH (@1" SLACK).
6. ROOT BARRIER REQUIRED ALONG EDGE OF ROADWAY, CURB, DRIVEWAY, TRAIL, SIDEWALK, OR OTHER STRUCTURES WHERE ROOTBALL IS WITHIN TWO FEET; PLACE VERTICAL ROOTBARRIER AS SHOWN IN STANDARD PLANS NO 424a OR 424b. INSTALL ROOT BARRIERS FOR NEWLY PLANTED TREES ONLY.

2 / 1 TREE PLANTING IN PLANTING STRIP

SCALE: N.T.S. SIMLAR FOR ALL TREE PLANTING

NOTES FOR STREET TREES:

- Trees are to be a minimum of 2-2.5" caliper.
- Soil is to be amended per COS plan 142.
- Street trees are to be planted per COS plan 100a.
- Provide 18" deep x 10' length root barrier along the sidewalk edge and 24" deep x 10' length root barrier along the street side, centered to each tree and placed at each street tree, typical.
- Notify SDOT Urban Forestry two working days prior to planting (206-684-5693). To review size, quality and location of the street trees.
- Street trees shall receive supplemental water for the first three growing seasons following planting.

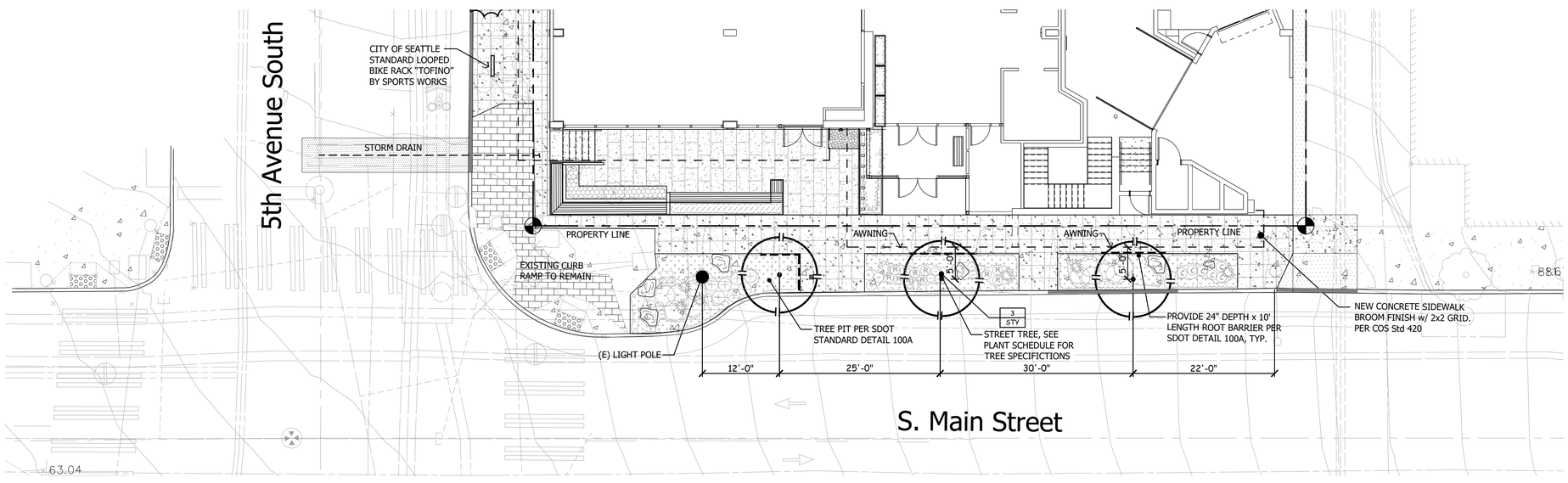

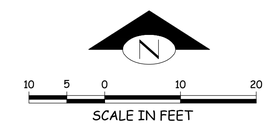

DATE	MARK	NATURE REVISIONS	MADE	CHK'D	REV'D

90% Complete Street Improvement Plan - NOT FOR CONSTRUCTION

SDCI PROJECT #6777621-CN

CALL 811 BEFORE YOU DIG

STATE OF WASHINGTON REGISTERED LANDSCAPE ARCHITECT

KENNETH E. LARGE
KLLA LANDSCAPE ARCHITECTS, INC.
CERTIFICATE #301

KLLA LANDSCAPE ARCHITECTS INC.
P 206 396 7617
KLLA@COMCAST.NET
21803 NE 17TH COURT SAMMAMISH, WA 98074

KEN LARGE
Landscape Architect
21803 NE 17th Court
Sammamish, Wa. 98074
Office: 425-836-4578, Cell: 206-396-7617
E-mail: klla@comcast.net
FAX: 425-898-8923

REVIEWED BY SPU/WATER ENGINEERING ..... 20.....

REVIEWED BY SPU/DRAINAGE ..... 20.....

APPROVED BY SDOT STREET IMPROVEMENT PERMITTING ..... 20.....

NAME OR INITIALS AND DATE	INITIALS AND DATE
DESIGNED	REVIEWED:
CHECKED	PROJECT MANAGER
DRAWN	
CHECKED	
DESIGN REVIEW	REVISED AS–BUILT

All work done in accordance with the City of Seattle Standard Plans and Specifications in effect on the date shown above, and supplemented by Special Provisions.

City of Seattle
Seattle Department of Transportation

SCALE: H. V. INSPECTORS'S BOOK

214 5TH AVENUE SOUTH
STREET IMPROVEMENTS
S. Main Street

SDOT PROJECT NO. SUSIP0000004

VAULT PLAN NO.

VAULT SERIAL NO.

SHEET 3 OF 4

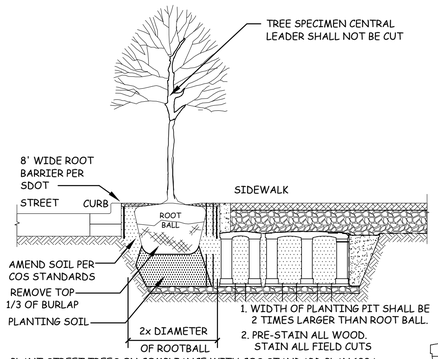

PLANT STREET TREES ON COMPLIANCE WITH COS STANDARD PLAN 100A

2/2 TYPICAL STREET TREE PLANTING

SCALE: N.T.S

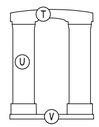

SILVA CELL COMPONENTS

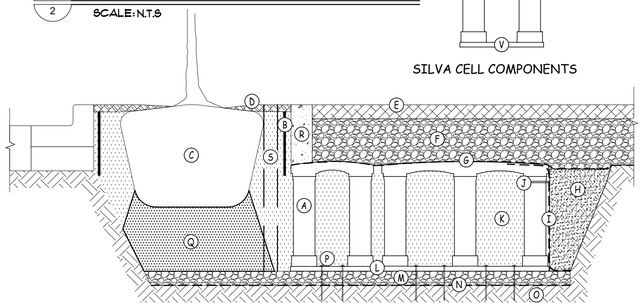

3/2 SILVA CELL TYPICAL SECTION

SCALE: N.T.S

KEY PLAN

- (A) SILVA CELL SYSTEM (DECK, BASE, & POSTS)
- (B) DEEPROOT ROOT BARRIER (DEPTH PER PROJECT SPECIFICATIONS). PREVENTS ROOTS FROM DISTURBING PAVEMENT.
- (C) TREE ROOT PACKAGE, SIZE VARIES
- (D) 1"-2" (25mm-50mm) MULCH, PLACED IN TREE OPENING
- (E) SURFACE TREATMENT, PER PROJECT
- (F) AGGREGATE BASE COURSE, DEPTH VARIES PER PROJECT
- (G) GEOTEXTILE TO KEEP AGGREGATE FROM MIGRATING DOWN THROUGH CELL DECK
- (H) BACKFILL, PER PROJECT SPECS.
- (I) GEOGRID TO PROVIDE FOR VERTICAL SEPARATION BETWEEN PLANTING SOILS AND BACKFILL WHILE ALLOWING ROOT PENETRATION INTO ADJACENT SOILS. 6" (150 mm) TOE (OUTWARD FROM BASE) AND 12" (305 mm) EXCESS (OVER TOP OF DECK).
- (J) CABLE TIE, ATTACHING GEOGRID TO SILVA CELL AT BASE OF UPPER POST FLARE
- (K) PLANTING SOIL, PER PROJECT SPECIFICATIONS, COMPACTED TO 70-80% PROCTOR
- (L) 1" - 4" (25 mm - 100mm) SPACING BETWEEN SILVA CELLS AT BASE
- (M) 4" (100 mm) MIN AGGREGATE SUB BASE, COMPACTED TO 95% PROCTOR
- (N) GEOTEXTILE, TO PROVIDE SEPARATION BETWEEN SUBGRADE AND AGGREGATE BASE
- (O) SUBGRADE, COMPACT TO 95% PROCTOR
- (P) PIN, PER SILVA CELL SPECIFICATIONS, TO KEEP CELLS IN PLACE DURING CONSTRUCTION
- (Q) PLANTING SOIL BELOW TREE ROOT PACKAGE, COMPACTED TO 85-90% PROCTOR
- (R) CONCRETE EDGE RESTRAINT TO STABILIZE EDGE AND PREVENT AGGREGATE MIGRATION INTO TREE OPENING.
- (S) INSPECTION RISER TO PROVIDE FOR MONITORING OF SOIL MOISTURE (OPTIONAL)
- (T) SILVA CELL DECK
- (U) SILVA CELL POST
- (V) SILVA CELL BASE

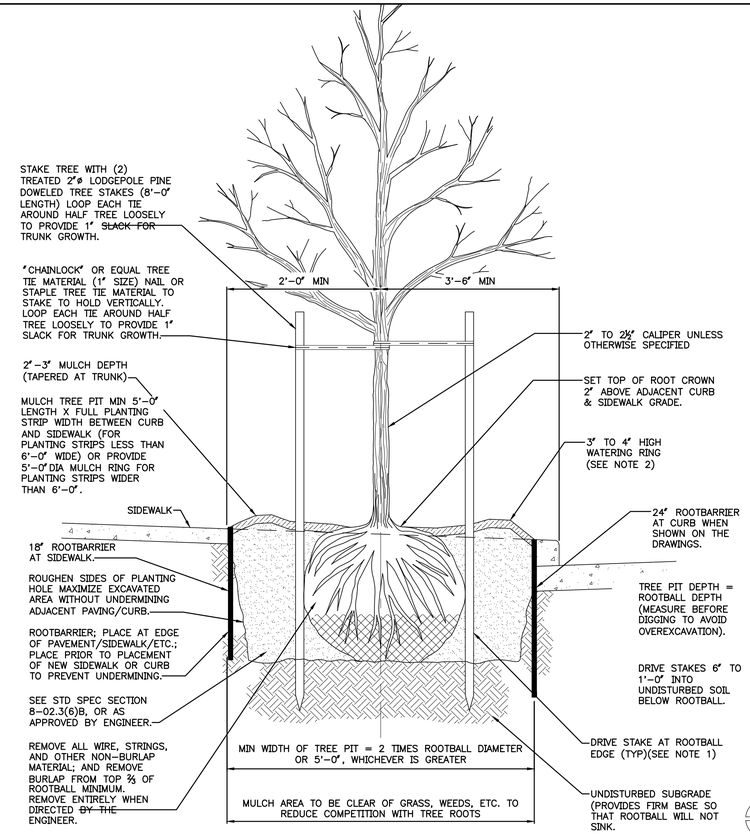

1/2 TREE PLANTING IN PLANTING STRIP

SCALE: N.T.S. SIMLAR FOR ALL TREE PLANTING

PLANT LIST STREET TREES

BLOSSOM April 19, 2022

QUAN	SYMBOL	PLANT NAME	SIZE
3	STX	STYRAX JAPONICA/ JAPANESE SNOWDROP TREE	2.5 " CAL. B/B, Street Tree to conform to SDOT Standards
3	NYS	NYSSA SYLVATICA RED RAGE/ RED RAGE TUPELO	2.5 " CAL. B/B, Street Tree to conform to SDOT Standards

100 LANDSCAPE PLANTING

STANDARD PLAN NO **100a**

REV DATE: JAN 2017

REF STD SPEC SEC 8-02

NOTES:

1. REMOVE STAKES ONE YEAR AFTER INSTALLATION.
2. SHAPE SOIL SURFACE TO PROVIDE 4' DIA WATERING RING.
3. TREE CLEARANCE MUST BE PER STD PLAN NO 030.
4. SEE STD PLAN NO 424 FOR TREE PIT DETAIL.
5. ADJUST TREE TIES DURING ESTABLISHMENT TO ALLOW ROOM FOR GROWTH (@1" SLACK).
6. ROOT BARRIER REQUIRED ALONG EDGE OF ROADWAY, CURB, DRIVEWAY, TRAIL, SIDEWALK, OR OTHER STRUCTURES WHERE ROOTBALL IS WITHIN TWO FEET; PLACE VERTICAL ROOTBARRIER AS SHOWN IN STANDARD PLANS NO 424a OR 424b. INSTALL ROOT BARRIERS FOR NEWLY PLANTED TREES ONLY.

NOTES FOR STREET TREES:

- Trees are to be a minimum of 2-2.5" caliper.
- Soil is to be amended per COS plan 142.
- Street trees are to be planted per COS plan 100a.
- Provide 18" deep x 10' length root barrier along the sidewalk edge and 24" deep x 10' length root barrier along the street side, centered to each tree and placed at each street tree, typical.
- Notify SDOT Urban Forestry two working days prior to planting (206-684-5693). To review size, quality and location of the street trees.
- Street trees shall receive supplemental water for the first three growing seasons following planting.

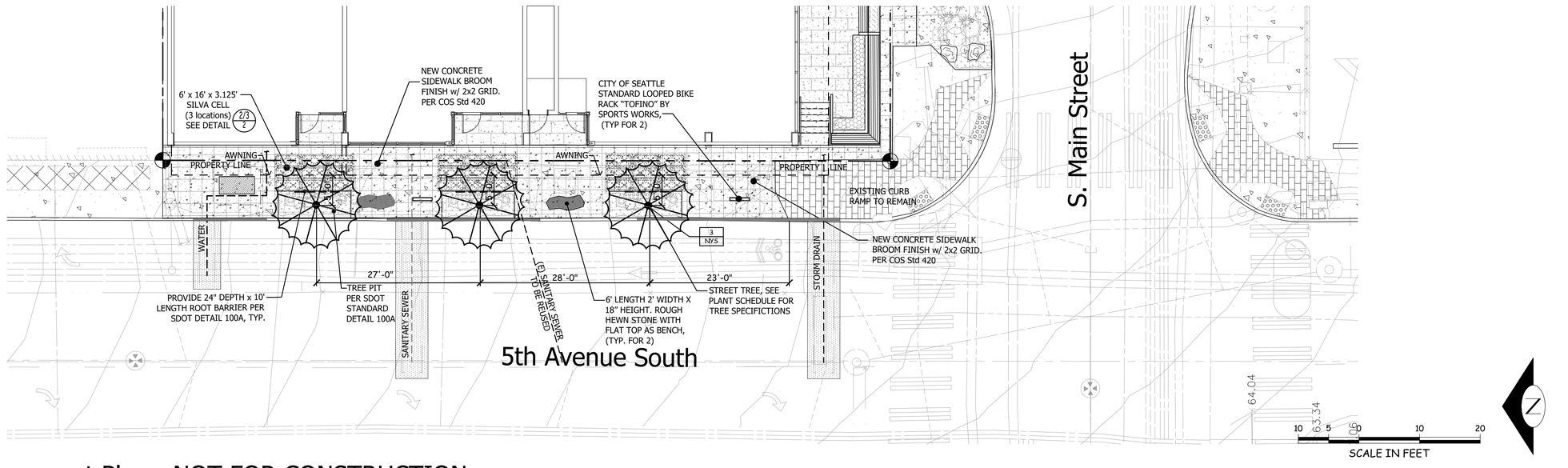

DATE	MARK	NATURE REVISIONS	MADE	CHK'D	REV'D

90% Complete Street Improvement Plan - NOT FOR CONSTRUCTION

SDCI PROJECT #6777621-CN

CALL 811 BEFORE YOU DIG

STATE OF WASHINGTON REGISTERED LANDSCAPE ARCHITECT

KENNETH E. LARGE
KLLA LANDSCAPE ARCHITECTS, INC.
CERTIFICATE #301

KLLA LANDSCAPE ARCHITECTS INC.
P 206 396 7617
KLLA@COMCAST.NET
21803 NE 17TH COURT SAMMAMISH, WA 98074

KEN LARGE
Landscape Architect
21803 NE 17th Court
Sammamish, Wa. 98074
Office: 425-836-4578, Cell: 206-396-7617
E-mail: klla@comcast.net
FAX: 425-898-8923

REVIEWED BY SPU/WATER ENGINEERING ..... 20.....

REVIEWED BY SPU/DRAINAGE ..... 20.....

APPROVED BY SDOT STREET IMPROVEMENT PERMITTING ..... 20.....

NAME OR INITIALS AND DATE	INITIALS AND DATE
DESIGNED	REVIEWED:
CHECKED	PROJECT MANAGER
DRAWN CHECKED	
DESIGN REVIEW	REVISED AS-BUILT

All work done in accordance with the City of Seattle Standard Plans and Specifications in effect on the date shown above, and supplemented by Special Provisions.

City of Seattle
Seattle Department of Transportation

SCALE: H. V. INSPECTORS'S BOOK

214 5TH AVENUE SOUTH
STREET IMPROVEMENTS
5th Avenue South

SDOT PROJECT NO. SUSIP0000004

VAULT PLAN NO.

VAULT SERIAL NO.

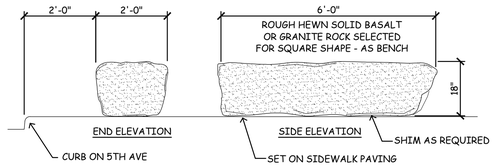

5 / L-1.0 STONE BENCH
SCALE: 1"=1'-0"

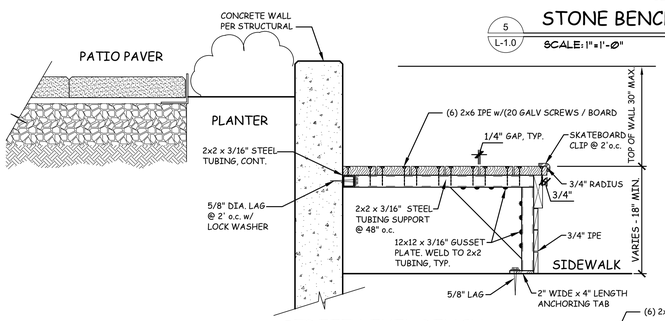

4 / L-1.0 STREET LEVEL BENCH
SCALE: 1"=1'-0"

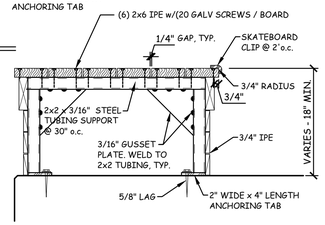

3 / L-1.0 PLAZA LEVEL BENCH
SCALE: 1"=1'-0"

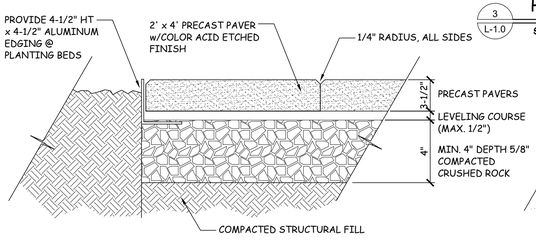

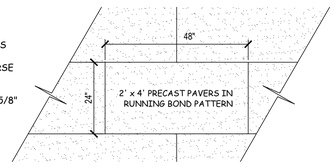

2 / L-1.0 PATIO PAVER DETAIL
SCALE: 1-1/2"=1'-0"

PLANT LIST STREET LEVEL

BLOSSOM April 19, 2022

QUAN	SYMBOL	PLANT NAME	SIZE
42	ACOR	ACORUS PUSILLUS MINIMUS AUREUS	1 GALLON CAN
4	BERB	BERBERIS GLADWYNENSIS WILLIAM PENN/ WILLIAM PENNBARBERRY	1 GALLON CAN 18" HEIGHT
273	COTD	COTONEASTER DAMMERI LOW FAST	4" POTS
6	CHAO	CHANOMELES TOYO NISHIKI /QUINCE	2 GALLON CAN
10	ERYN	ERYNGIUM ZABELII 'BIG BLUE'(SEA HOLLY)	ONE GALLON
11	ESC	ESCALLONIA NEWPORT DWARF	5 GALLON CAN
6	EUPH	EUPHORBIA WULFENII	1 GALLON CAN
8	HYDP	HYDRANGEA PANNICULATA TARDIVA	5 GALLON
12	ICC	ILEX CRENATA COMPACTA JAPANESE HOLLY	10 GALLON CAN, 18 to 21" ht and width or B/B
4	IRISK	IRIS KAMPFERI/ JAPANESE IRIS	1 GALLON
78	LIRS	LIROPE SPICATA/ SPREADING LIROPE	QUARTS AT 18" TRI SPACING
10	NEPT	NEPTETA CATARIA WALKERS LOWCATNIP	1 GALLON CAN
3	NYS	NYSSA SYLVATICA RED RAGE/ RED RAGE TUPELO	2.5 " CAL. B/B, Street Tree to conform to SDOT Standards
13	PENNV	PENNISETUM BURGUNDY BUNNY	1 GALLON CAN
32	PHYLLO	PHYLLOSTACHYS NIGRA/ BLACK BAMBOO	15 GALLON CAN, 7 STEMS MIN. PER CONTAINER
10	RAPH	RAPHIOLEPSIS UMBELLATA MINOR	5 GALLON CAN
3	STY	STYRAX JAPONICA/ JAPANESE SNOWDROP TREE	2.5 " CAL. B/B, Street Tree to conform to SDOT Standards

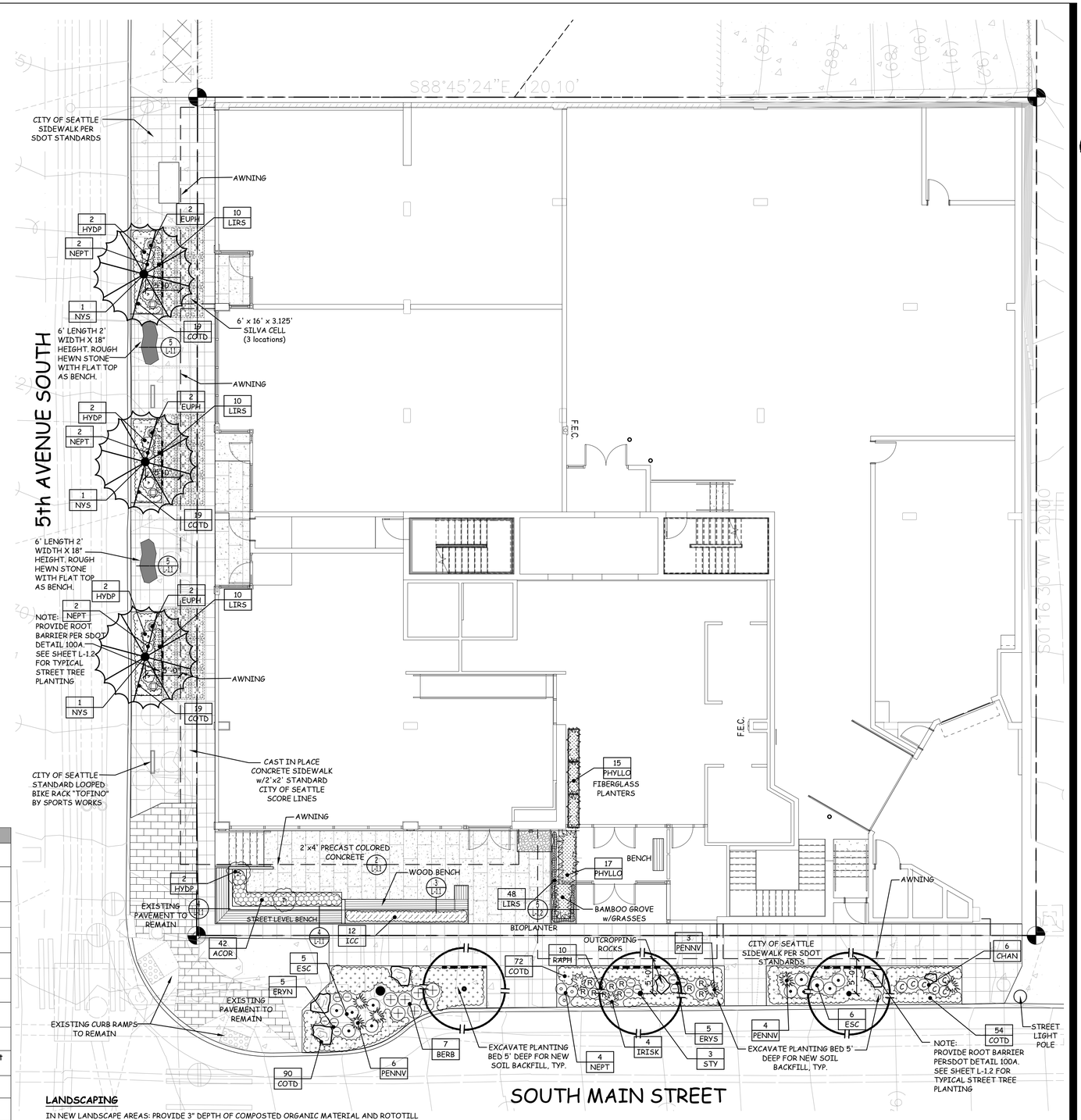

LANDSCAPING

IN NEW LANDSCAPE AREAS: PROVIDE 3" DEPTH OF COMPOSTED ORGANIC MATERIAL AND ROTOTILL INTO THE SUBGRADES TO A DEPTH OF 6 INCHES. OVER THE TOP OF THE PREPARED SUBGRADES PROVIDE AN ADDITIONAL 6" OF PACIFIC TOPSOILS 60/40 SOIL .

PROVIDE LAYOUT OF PLANT MATERIAL FOR APPROVAL OF THE LANDSCAPE ARCHITECT. SUBSTITUTIONS OF PLANT MATERIAL WITHOUT PRIOR AUTHORIZATION IS NOT ALLOWED AND THE PLANT MATERIAL REMOVED WITHOUT COMPENSATION.

INSTALL PLANTS FOR BEST ORIENTATION AND CLEAN UNIFORM ROWS AT PROPER PLANTING DEPTH.

UPON APPROVAL OF THE FINAL PLANTING LAYOUT, PROVIDE 2" DEPTH PACIFIC TOPSOILS COMP. MULCH.

PROVIDE ONE YEAR WARRANTY ON ALL PAVING AND PLANTING.

IRRIGATION

IRRIGATION IS NETAFIN DRIP TUBING AT 12" o.c.

w/ EMITTERS AT 9" ON CENTER. PROVIDE RAINBIRD ESP

CLOCK w/ AUTOMATIC WIRELSS RAIN SENSOR.

NOTES FOR STREET TREES:

- TREES ARE TO BE A MINIMUM OF 2-2.5" CALIPER.
- SOIL IS TO BE AMENDED PER COS PLAN 142.
- STREET TREES ARE TO BE PLANTED PER COS PLAN 100A.
- PROVIDE 18" DEEP X 6' LENGTH ROOT BARRIER, CENTERED TO EACH TREE AND PLACED ALONG THE SIDEWALK EDGE AT EACH STREET TREE, TYPICAL.
- NOTIFY SDOT URBAN FORESTRY TWO WORKING DAYS PRIOR TO PLANTING (206-684-5693). TO REVIEW SIZE, QUALITY AND LOCATION OF THE STREET TREES.
- STREET TREES SHALL RECEIVE SUPPLEMENTAL WATER FOR THE FIRST THREE GROWING SEASONS FOLLOWING PLANTING.

CALL BEFORE YOU DIG

CALL 811 OR 1 800 424 5555 AT LEAST TWO BUSINESS DAYS PRIOR TO DIGGING OPERATIONS. PROVIDE TICKET NUMBER.

0 8 16
PLAN IN FEET

1 / L-1.1 LANDSCAPE PLAN GROUND LEVEL
SCALE: 1/8"=1'-0"

KEN LARGE
Landscape Architect
21803 NE 17th Court
Sammamish, Wa. 98074
Office: 425-836-4578, Cell: 206-396-7617
E-mail: klla@comcast.net
FAX: 425-898-8923

SEAL:

STATE OF WASHINGTON
REGISTERED
LANDSCAPE ARCHITECT
KENNETH E. LARGE
KLLA LANDSCAPE ARCHITECTS
CERTIFICATE # 547

BLOSSUM APARTMENTS
214-220 5TH AVENUE SOUTH
SEATTLE, WASHINGTON

JOB NUMBER:
DRAWN: KEL
CHECKED:
DATE: MARCH 12,2021
REVISIONS:

1	PLANTER SCHE. 04/03/21
2	MUP COMMENT 04/19/21
3	PAVER UPDATE 11/11/21
4	PLANTING 5th 04/19/22

SHEET TITLE:

LANDSCAPE PLAN & DETAILS

GROUND LEVEL

PERMIT SET

SHEET NUMBER:

L-1.1

NOTES:

1. REMOVE STAKES ONE YEAR AFTER INSTALLATION.
2. SHAPE SOIL SURFACE TO PROVIDE 4' DIA WATERING RING.
3. TREE CLEARANCE MUST BE PER STD PLAN NO 030.
4. SEE STD PLAN NO 424 FOR TREE PIT DETAIL.
5. ADJUST TREE TIES DURING ESTABLISHMENT TO ALLOW ROOM FOR GROWTH (Ø1" SLACK).
6. ROOT BARRIER REQUIRED ALONG EDGE OF ROADWAY, CURB, DRIVEWAY, TRAIL, SIDEWALK, OR OTHER STRUCTURES WHERE ROOTBALL IS WITHIN TWO FEET; PLACE VERTICAL ROOTBARRIER AS SHOWN IN STANDARD PLANS NO 424a OR 424b. INSTALL ROOT BARRIERS FOR NEWLY PLANTED TREES ONLY.

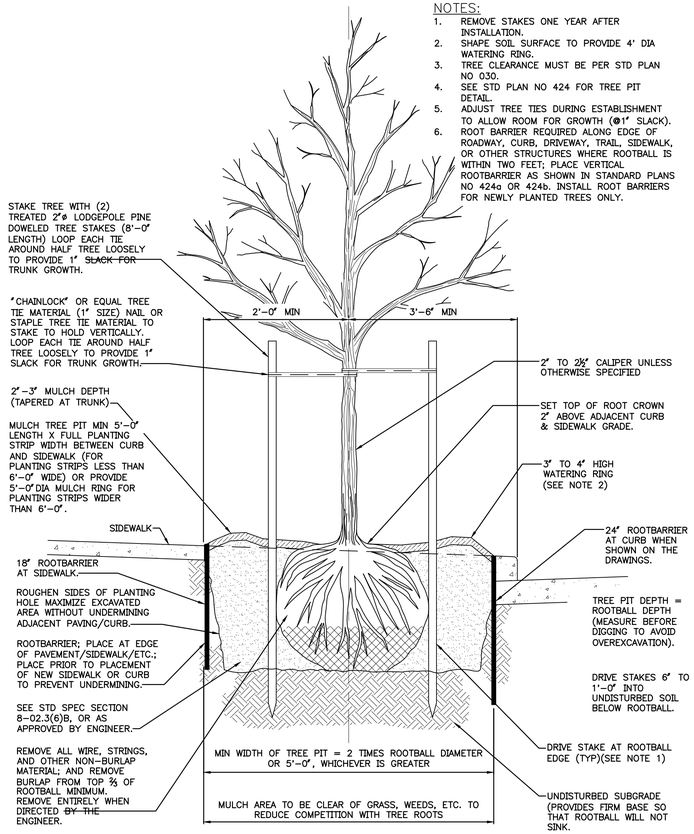

4 / L-1.2 STREET TREE PLANTING IN PLANTING STRIP

SCALE: N.T.S.

SPACING "A"	SPACING "B"	# OF PLANTS/SF
6" o.c.	5.20"	4.60
8" o.c.	6.93"	2.60
10" o.c.	8.66"	1.66
12" o.c.	10.40"	1.15
15" o.c.	13.00"	.738
18" o.c.	15.60"	.512
24" o.c.	20.80"	.290
30" o.c.	26.00"	.185
36" o.c.	30.00"	.116

SEE GROUNDCOVER PLANT KEY FOR MAXIMUM TRIANGULAR SPACING "A". THIS CHART IS TO BE USED TO DETERMINE NUMBER OF GROUNDCOVER PLANTS REQUIRED IN A GIVEN AREA.

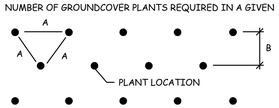

PLANT SPACING CHART
FOR USE WHEN PLANTS ARE SPACED EQUIDISTANT FROM EACH OTHER, AS IN ALL MASSED SHRUB/GROUNDCOVER PLANTINGS

3 / L-1.2 PLANT SPACING CHART

SCALE: N.T.S.

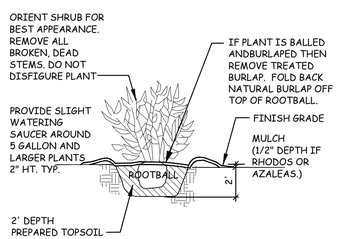

2 / L-1.2 TYPICAL SHRUB PLANTING

SCALE: N.T.S.

PLANT LIST LEVEL 2

QUAN.	SYMBOL	PLANT NAME	SIZE
1	ACERP	ACER SHIRASAWANUM/ FULL MOON MAPLE	6-7'- B/B
5	BAMB	ARTIFICAL BAMBOO	8-12' MINIMUM 18 STEMS FROM ARTIFICAL PLANTS UNLIMITED
2	MAHC	MAHONIA CHARITY/ CHARITY OREGON GRAPE	5 GALLON CAN, 18 INCH HEIGHT 3' TRI. SPACING
10	NAN	NANDINA DOMESTICA GULF STREAM/ HEAVENLY BAMBOO	5 GALLON CAN
5	POLYB	POLYSTICHUM POLYBLEHARUM TASSEL FERN	1 GALLON CAN
90	SAG	SAGINA SUBULATA/ IRISH MOSS	4" POTS
6	SARC	SARCOCOCCA RUSKIFOLIA FRAGRANT SARCOCOCCA	1 GALLON

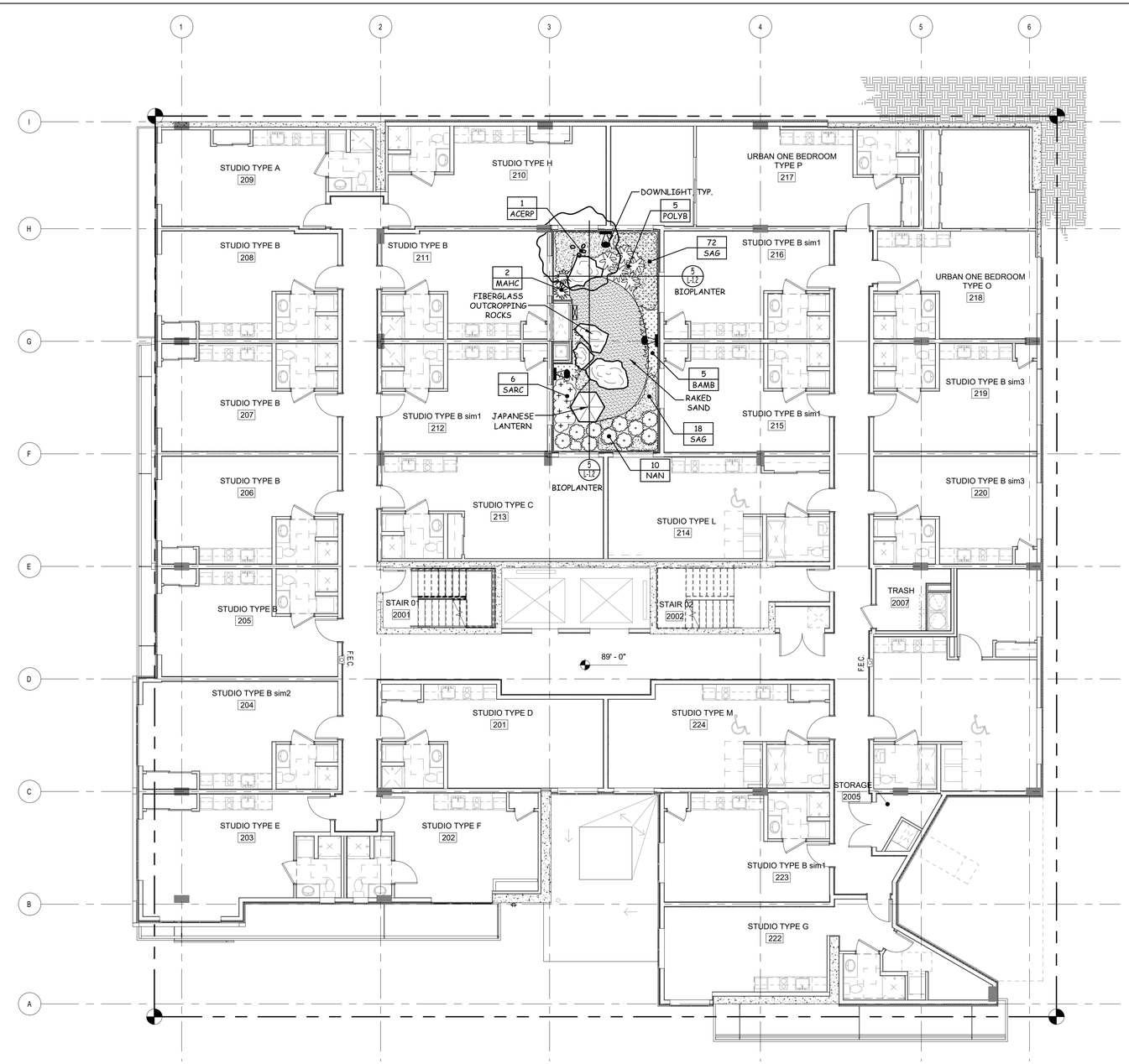

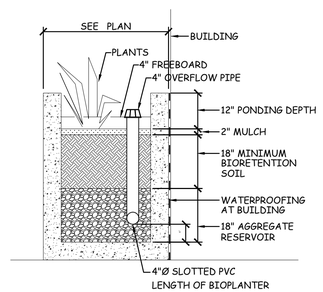

5 / L-1.2 BIOPLANTER SECTION (CONCRETE)

SCALE: 1/2"=1'-0"

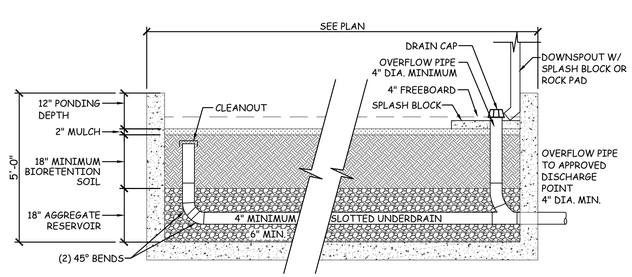

IRRIGATION

IRRIGATION IS NETAFIN DRIP TUBING AT 12" o.c. w/ EMITTERS AT 9" ON CENTER. PROVIDE RAINBIRD ESP CLOCK w/ AUTOMATIC WIRELSS RAIN SENSOR.

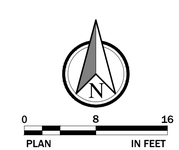

1 / L-1.2 LANDSCAPE PLAN LEVEL 02

SCALE: 1/8"=1'-0"

KEN LARGE
Landscape Architect
21803 NE 17th Court
Sammamish, Wa. 98074
Office: 425-836-4578, Cell: 206-396-7617
E-mail: klla@comcast.net
FAX: 425-898-8923

SEAL:

STATE OF WASHINGTON REGISTERED LANDSCAPE ARCHITECT
KENNETH E. LARGE
KLLA LANDSCAPE ARCHITECTS
CERTIFICATE # 501

BLOSSUM APARTMENTS
214-220 5TH AVENUE SOUTH
SEATTLE, WASHINGTON

JOB NUMBER:
DRAWN: KEL
CHECKED:
DATE: MARCH 12,2021

REVISIONS:

1	PLANTER SCHE. 04/03/21
2	MUP COMMENT 04/19/21
3	PAVER UPDATE 11/11/21
4	STREET TREES ON 5th

SHEET TITLE:

LANDSCAPE PLAN & DETAILS

LEVEL 02

PERMIT SET

SHEET NUMBER:

L-1.2

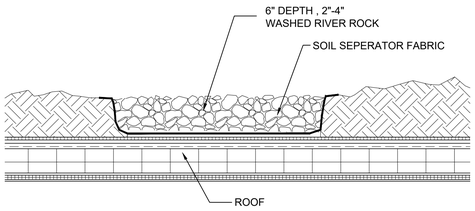

5 L-1.3 WASHED ROCK DETAIL
SCALE: "=1'-0"

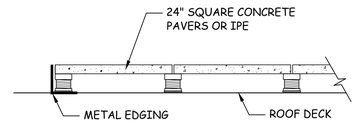

4 L-1.3 PEDESTAL ROOF PAVERS/ICP DECKING
SCALE: "=1'-0"

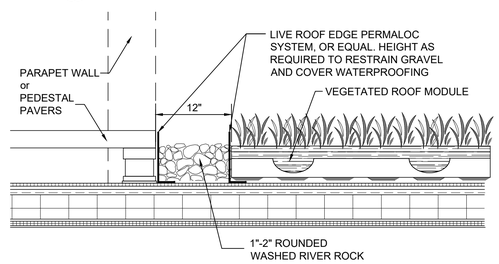

3 L1-3 GRAVEL EDGE AT GREEN ROOF
SCALE: 1/2 "=1'-0"

ROOF GARDEN PLANTERS (Blossom)

Manufactured by Planter Technologies
Brandon McCormick
Regional Sales Manager | Carlsbad Manufacturing
6056 Corte Del Cedro Carlsbad, CA 92011
P: 877-595-9732 x741 | F: 877-595-973

#	X"	Y"	HEIGHT	QUANTITY	COMMENT
1	48"	48"	42"	3	FIBERGLASS, BLACK WITH DRAIN HOLES
2	42"	48"	42"	4	"
3	36"	72"	42"	1	"
4	36"	60"	42"	2	"
5	30"	60"	42"	2	"
6	30"	60"	24"	1	"
7	30"	48"	42"	8	"
8	24"	72"	36"	11	"
9	24"	60"	36"	1	"

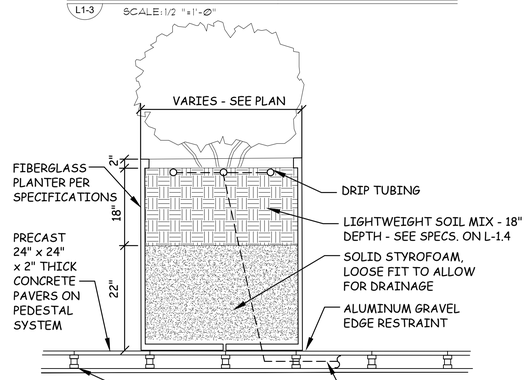

2 L-1.3 FIBERGLASS PLANTER SECTION
SCALE:NTS

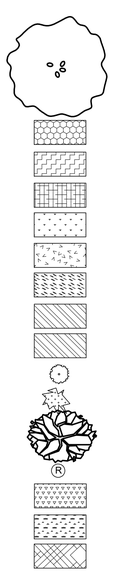

PLANT LIST ROOF LEVEL

QUAN.	SYMBOL	PLANT NAME	SIZE
1	ACERG	ACER DISSECTUM GARNET/ GARNET MAPLE	6-7 ' HT AND 4' WIDTH, SPECIMEN, WIGGINS NURSERY
51	ACOR	ACORUS PUSILLUS MINIMUS AUREUS	1 GALLON CAN
16	CAMP	CAMPANULA PORTENSCHLAGIANABELLFLOWER	1 GALLON CAN
32	CAREX	CAREX TESTACEA/ ORANGE SEDGE	1 GALLON CAN
16	IBER	IBERIS SEMPERVIRENS/ CANDYTUFT	4" POTS
32	LAVD	LAVENDULA DENDATA/ FRENCH LAVENDAR	1 GALLON
90	LIRS	LIROPE SPICATA/ SPREADING LIROPE	QUARTS AT 18" TRI SPACING
6	MISC	MISCANTHUS SINENSIS GRACILIMUS	1 GALLON CAN WIGGINS
12	MISCYJ	MISCANTHUS YAKU JIMA	1 GALLON
7	NAN	MAHONIA SOFT CARESS	5 GALLON CAN
37	PHYLLO	PHYLLOSTACHYS AUREA/ GOLDEN BAMBOO	15 GALLON CAN, 7 CANES PER CONTAINER MIN.
3	PIN	PINUS DENSIFLORA HINDU PAN	10-12' SPECIMEN, WIGGINS NURSERY
5	RAPH	RAPHIOLEPSIS UMBELLATA MINOR	5 GALLON CAN
18	SCHIZ	SCHIZOSTYLIS COCCINEA KAFIR LILY	1 GALLON CAN
100	SED	SEDUM TRAYS 1' X 2' : MIX OF THREE DIFFERENT SEDUMS IN	TRAYS 4" DEPTH SOIL MIX
92	THYM	THYMUS PULEGIOIDES FOXLEY / FOXLEY THYYME	4" POTS

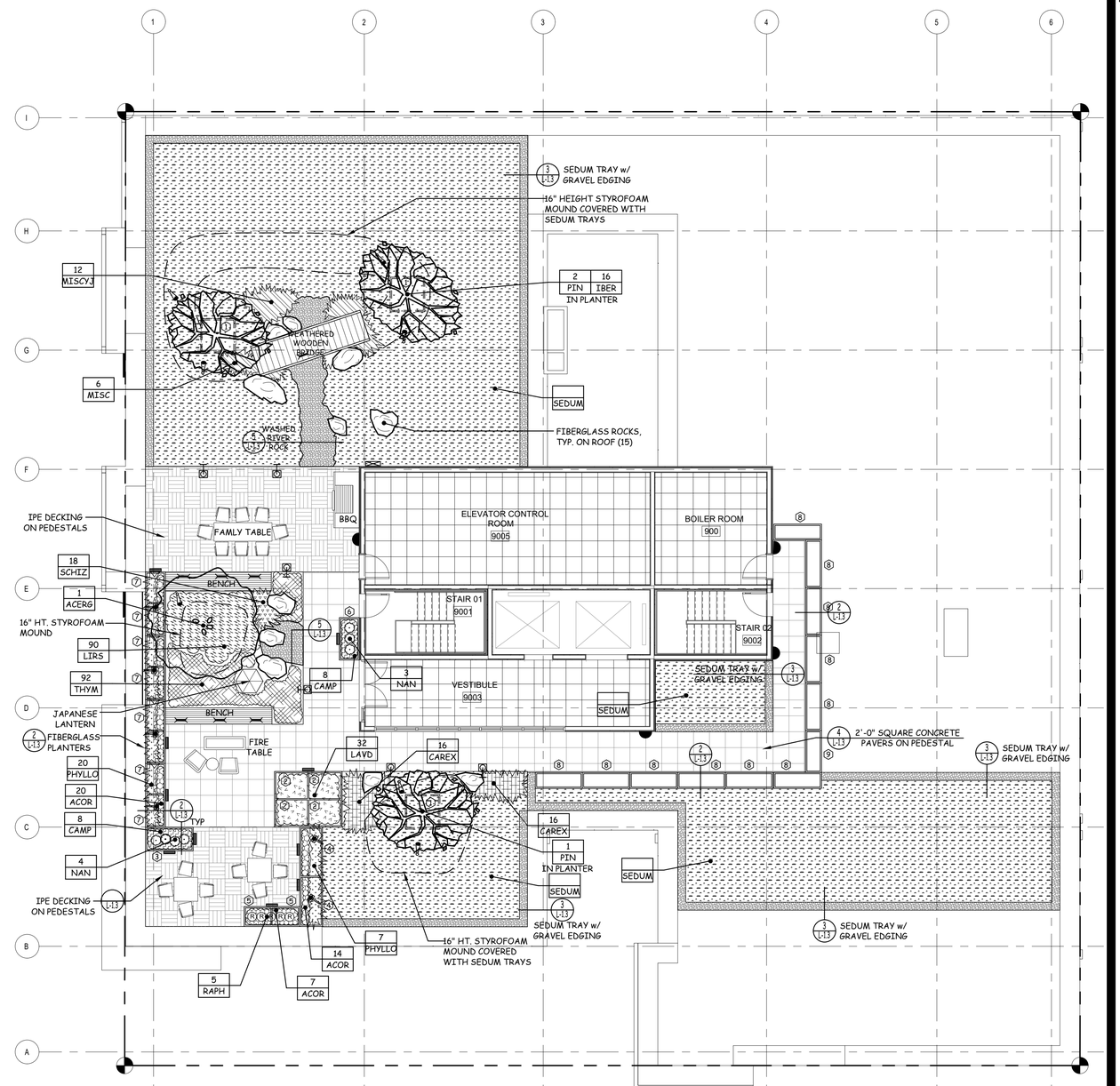

IRRIGATION

IRRIGATION IS NETAFIN DRIP TUBING AT 12" o.c. w/ EMITTERS AT 9" ON CENTER. PROVIDE RAINBIRD ESP CLOCK w/ AUTOMATIC WIRELSS RAIN SENSOR.

NOTE: SEE SHEET L-1.4 FOR SEDUM TRAY IRRIGATION, ROOF PLANTER SOIL SPECIFICATIONS, AND FIXTURE PRODUCT INFORMATION

0 8 16
PLAN IN FEET

1 L-1.3 LANDSCAPE PLAN - ROOF
SCALE: 1/8"=1'-0"

KEN LARGE
Landscape Architect
21803 NE 17th Court
Sammamish, Wa. 98074
Office: 425-836-4578, Cell: 206-396-7617
E-mail: klla@comcast.net
FAX: 425-898-8923

SEAL:
STATE OF WASHINGTON REGISTERED LANDSCAPE ARCHITECT
KENNETH E. LARGE
KLLA LANDSCAPE ARCHITECTS
CERTIFICATE # 3411

BLOSSUM APARTMENTS
214-220 5TH AVENUE SOUTH
SEATTLE, WASHINGTON

JOB NUMBER:
DRAWN: KEL
CHECKED:
DATE: MARCH 12,2021
REVISIONS:

1	PLANTER SCHE. 04/03/21
2	MUP COMMENT 04/19/21
3	PAVER UPDATE 11/11/21
4	STREET TREES ON 5th

SHEET TITLE:
LANDSCAPE PLAN & DETAILS
ROOF PLAN
PERMIT SET

SHEET NUMBER:
L-1.3

Permanent irrigation for landscaping on roof pursuant to SFC Section 317.4

Irrigation on the Green Roof Areas are watered by a mean of integral tubing to the planting trays per the following information sheet:

COLUMBIA GREEN TECHNOLOGIES

TECHNICAL INFORMATION SHEET

Integrated Drip Irrigation for Planted-In-Place Tray System

Product NUMBER: IR6000

Description:

Easy to install, this durable integrated drip irrigation system for Columbia Green's trays secures the driplines in place, so they don't float to the surface or shift over time. The system provides low maintenance, successful plant establishment and adds supplemental irrigation during warm weather, protecting your green roof from temporary regional droughts and hot spells throughout the life of the green roof. Optional but recomended, this high efficency, cost effective drip irrigation system locks into the tray preventing the driplines from shifting or floating to the surface.

Fabricated of a heavy duty polypropylene, the distribution header is easily placed within the Irrigation Tray Edger for concealment, UV protection giving the system a finished look. The header connects to the drip tape through simple barb/compression fittings, reducing the need for any special tools and pipe cements.

Once connected to the header, the high strength, pressure compensating drip tape is hooked into the the designed depression in the Columbia Green Tray edge, ensuring proper line spacing that won't shift over time. The drip tape is set at a ¾" minimum depth into the growing media, so drip tubing will never be visible on the finished roof.

The Columbia Green Integrated Drip Irrigation system includes: The poly-header, drip tape and associated tray hooks and fittings. Our Irrigation Concealment Edger is also available to cleanly hide the header pipe. Please contact our team for flow requirements or system zoning information if needed. The system point-of-connection, controller, supply line to the header, backflow prevention, control valves and associated accessories are by others.

Roof Garden and Planters are irrigated with Netafim Techline drip tubing with a 12" row spacing and a 12" emitter spacing. The system is automated to maintain levels of hydration necessary to keep green roof plants alive and to keep dry foliage to a minimum.

Scheduled Maintenance: All green roof areas and planters will be monitored for dead, dry and overgrown foliage and accumulated debris on a every two week basis from April 1 to October 1 and monthly before and after those dates.

Clearances: vegetation shall have a 6' minimum clearance to all rooftop equipment, mechanical equipment, roof vents and solar panels.

Lightweight Soil Specifications per Pacific Topsoils:

TABLE I

Sample ID No:	37781	
Description	Pacific Topsoil's, Inc. Lite Weight (client supplied sample)	
Sample Date	4/9/10	
	Particle Size Analysis (ASTM D422)	
Test	**Percent Passing**	**Specifications**
Sieve Size 0.375"	99.7*	90-100
Sieve Size 0.125"	74.5	55-95
Sieve Size #18	43.7	20-50
Sieve Size #60	9.2*	10-25
Sieve Size #200	2.9*	5-15
	pH Value (ASTM D4972)	
Test	**Value**	**Specifications**
pH Value	8.0	5.5-7.5
	Moisture, Ash, and Organic Matter of Peat and Other Organic Soils (ASTM D2974)	
Test	**Percent Loss**	**Specifications**
Organic Content (percent)	13.3*	6-12
	Unit Weight of Consolidated Soils and Aggregate (ASTM C29)	
Test	**Results**	**Specifications**
Dry Bulk Density (pcf)	27.6*	38-68 pcf
Saturated Bulk Density (pcf)	41.4*	62-93 pcf

Note: (*) denotes out of specifications

PRODUCTS

ITEM	MANUFACTURER	PRODUCT NUMBER/ SERIAL NUMBER	QUANTITY	NOTES
BBQ	WEBER	SUMMIT S-670 NATURAL GAS , 7470001	1	
FIRETABLE	REAL FLAME	BALTIC 50" RECTANGULAR NATURAL GAS, T9650NG-GLG	1	
LANTERNS	PACIFIC STONESCAPES INC (541)-928-7678	KANJUJI 30'' X 40'' TALL WITH WOOD WINDOW	2	
FIBERGLASS ROCKS	ORION STONE DEPOT (248)-391-2490	8 LARGE 7 MEDIUM 4 SMALL	19	MIX OF SHAPES AND TEXTURES
BRIDGE	SAMS GAZEBOS	8' JAPANESE WOOD GARDEN MOON BRIDGE J8 T WITH RAILING, 205058764	1	STAINED DARK WALNUT
ROOF PAVERS-WOOD	TILE TECH (888)-380-5575	2' SQUARE X 1-5/8" WITH GROOVED , WEATHERED SURFACE	AS SHOWN ON PLAN	PROVIDE HYBRID ADJUSTABLE PEDESTAL SYSTEM, BLACK JACK OR EQUAL
ROOF PAVERS-CONCRETE	ABBOTSFORD	TEXADA NATURAL COLOR ARCHITECTURAL FINISH 24 X 24" X 2" THICK	AS SHOWN ON PLAN	PROVIDE HYBRID ADJUSTABLE PEDESTAL SYSTEM BLACK JACK OR EQUAL
METAL EDGING	PERMALOC	GEOEDGE 4.5" X 4.5" ALUMINUM	PER PLAN	USE WITH PAVERS AND SEDUM TRAYS
SKATEBOARD DETERENT CLIPS	BARRETT ROBINSON (800)-848-6666	FA-135 ALUMINUM,	PROVIDE 20	PINNED AND GLUED TO STREET LEVEL BENCHES

KEN LARGE
Landscape Architect
21803 NE 17th Court
Sammamish, Wa. 98074

Office: 425-836-4578, Cell: 206-396-7617
E-mail: klla@comcast.net
FAX: 425-898-8923

SEAL:

STATE OF WASHINGTON REGISTERED LANDSCAPE ARCHITECT

Ken Large

KENNETH R. LARGE
KLLA - LANDSCAPE ARCHITECT
CERTIFICATE # 2437

BLOSSUM APARTMENTS
214-220 5TH AVENUE SOUTH
SEATTLE, WASHINGTON

JOB NUMBER:
DRAWN: KEL
CHECKED:
DATE: JANUARY 21,2021
REVISIONS:
1 -

SHEET TITLE:

PRODUCTS AND SPECFICATIONS

PERMIT SET

SHEET NUMBER:

L-1.4

Revised 4/8/09

Green Factor Worksheet*

SEATTLE × green factor

BLOSSOM APARTMENTS		Planting Area 1	2	3	keep adding columns as needed			TOTAL**
A1	square feet							0
A2	square feet	562						562
A3	square feet	39	370					409
B1	square feet	601	370	2965				4072
B2	# of plants	63	21	49				133
B3	# of trees			4				4
B4	# of trees							0
B5	# of trees	3						3
B6	# of trees							0
B7	# of trees							0
C1	square feet			2965				2965
C2	square feet			906				906
D	square feet							0
E	square feet							0
F1	square feet	15		125				140
F2	square feet							0
G	square feet							0
H1	square feet	601		3871				4472
H2	square feet							0
H3	square feet	601						601
H4	square feet							0

* See Green Factor score sheet for category definitions
** Enter totals on the Green Factor score sheet

Revised 12/28/10

Green Factor Score Sheet

SEATTLE × green factor

BLOSSOM APARTMENTS

Parcel size (enter this value first) * enter sq ft of parcel: 14,413 — SCORE 0.304

	Landscape Elements**	Totals from GF worksheet	Factor	Total
A	**Landscaped areas (select one of the following for each area)**			
1	Landscaped areas with a soil depth of less than 24"	enter sq ft: 0	0.1	-
2	Landscaped areas with a soil depth of 24" or greater	enter sq ft: 562	0.6	337.2
3	Bioretention facilities	enter sq ft: 409	1.0	409.0
B	**Plantings (credit for plants in landscaped areas from Section A)**			
1	Mulch, ground covers, or other plants less than 2' tall at maturity	enter sq ft: 4072	0.1	407
2	Shrubs or perennials 2'+ at maturity - calculated at 12 sq ft per plant (typically planted no closer than 18" on center)	enter number of plants: 133 — 1596	0.3	479
3	Tree canopy for "small trees" or equivalent (canopy spread 8' to 15') - calculated at 75 sq ft per tree	enter number of plants: 4 — 300	0.3	90
4	Tree canopy for "small/medium trees" or equivalent (canopy spread 16' to 20') - calculated at 150 sq ft per tree	enter number of plants: 0 — 0	0.3	-
5	Tree canopy for "medium/large trees" or equivalent (canopy spread of 21' to 25') - calculated at 250 sq ft per tree	enter number of plants: 3 — 750	0.4	300.0
6	Tree canopy for "large trees" or equivalent (canopy spread of 26' to 30') - calculated at 350 sq ft per tree	enter number of plants: 0 — 0	0.4	-
7	Tree canopy for preservation of large existing trees with trunks 6"+ in diameter - calculated at 20 sq ft per inch diameter	enter inches DBH: 0 — 0	0.8	-
C	**Green roofs**			
1	Over at least 2" and less than 4" of growth medium	enter sq ft: 2965	0.4	1,186.0
2	Over at least 4" of growth medium	enter sq ft: 906	0.7	634.2
D	**Vegetated walls**	enter sq ft: 0	0.7	-
E	**Approved water features**	enter sq ft: 0	0.7	-
F	**Permeable paving**			
1	Permeable paving over at least 6" and less than 24" of soil or gravel	enter sq ft: 140	0.2	28.0
2	Permeable paving over at least 24" of soil or gravel	enter sq ft: 0	0.5	-
G	**Structural soil systems**	enter sq ft: 0	0.2	-
		sub-total of sq ft = 11,700		
H	**Bonuses**			
1	Drought-tolerant or native plant species	enter sq ft: 4472	0.1	447.2
2	Landscaped areas where at least 50% of annual irrigation needs are met through the use of harvested rainwater	enter sq ft: 0	0.2	-
3	Landscaping visible to passersby from adjacent public right of way or public open spaces	enter sq ft: 601	0.1	60
4	Landscaping in food cultivation	enter sq ft: 0	0.1	-
			Green Factor numerator =	4,378

** Do not count public rights-of-way in parcel size calculation.*
*** You may count landscape improvements in rights-of-way contiguous with the parcel. All landscaping on private and public property must comply with the Landscape Standards Director's Rule (DR 6-2009)*

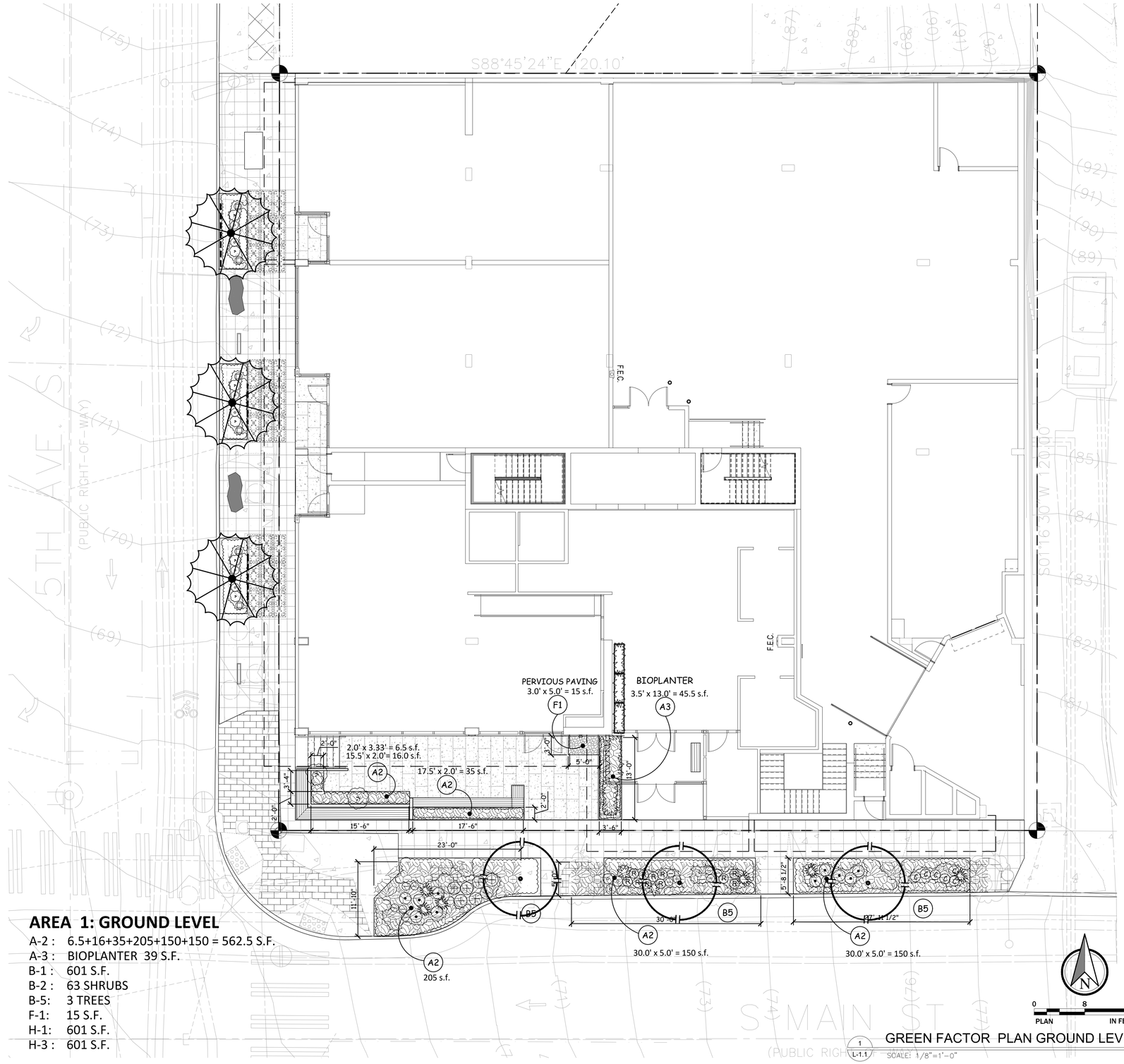

AREA 1: GROUND LEVEL

A-2 : 6.5+16+35+205+150+150 = 562.5 S.F.
A-3 : BIOPLANTER 39 S.F.
B-1 : 601 S.F.
B-2 : 63 SHRUBS
B-5: 3 TREES
F-1: 15 S.F.
H-1: 601 S.F.
H-3 : 601 S.F.

1 L-1.1 GREEN FACTOR PLAN GROUND LEVEL
SCALE: 1/8"=1'-0"

KEN LARGE
Landscape Architect
21803 NE 17th Court
Sammamish, Wa. 98074
Office: 425-836-4578, Cell: 206-396-7617
E-mail: klla@comcast.net
FAX: 425-898-8923

SEAL:

STATE OF WASHINGTON REGISTERED LANDSCAPE ARCHITECT
Ken Large
KENNETH E. LARGE
KLLA LANDSCAPE ARCHITECTS
CERTIFICATE # 345

BLOSSUM APARTMENTS
214-220 5TH AVENUE SOUTH
SEATTLE, WASHINGTON

JOB NUMBER:
DRAWN: KEL
CHECKED:
DATE: MARCH 12,2021
REVISIONS:

1	PLANTER SCHE. 04/03/21
2	MUP COMMENT 04/19/21
3	PAVER UPDATE 11/11/21
4	STREET TREES ON 5th

SHEET TITLE:
GREEN FACTOR PLAN

GROUND LEVEL
PERMIT SET

SHEET NUMBER:
L-2.1

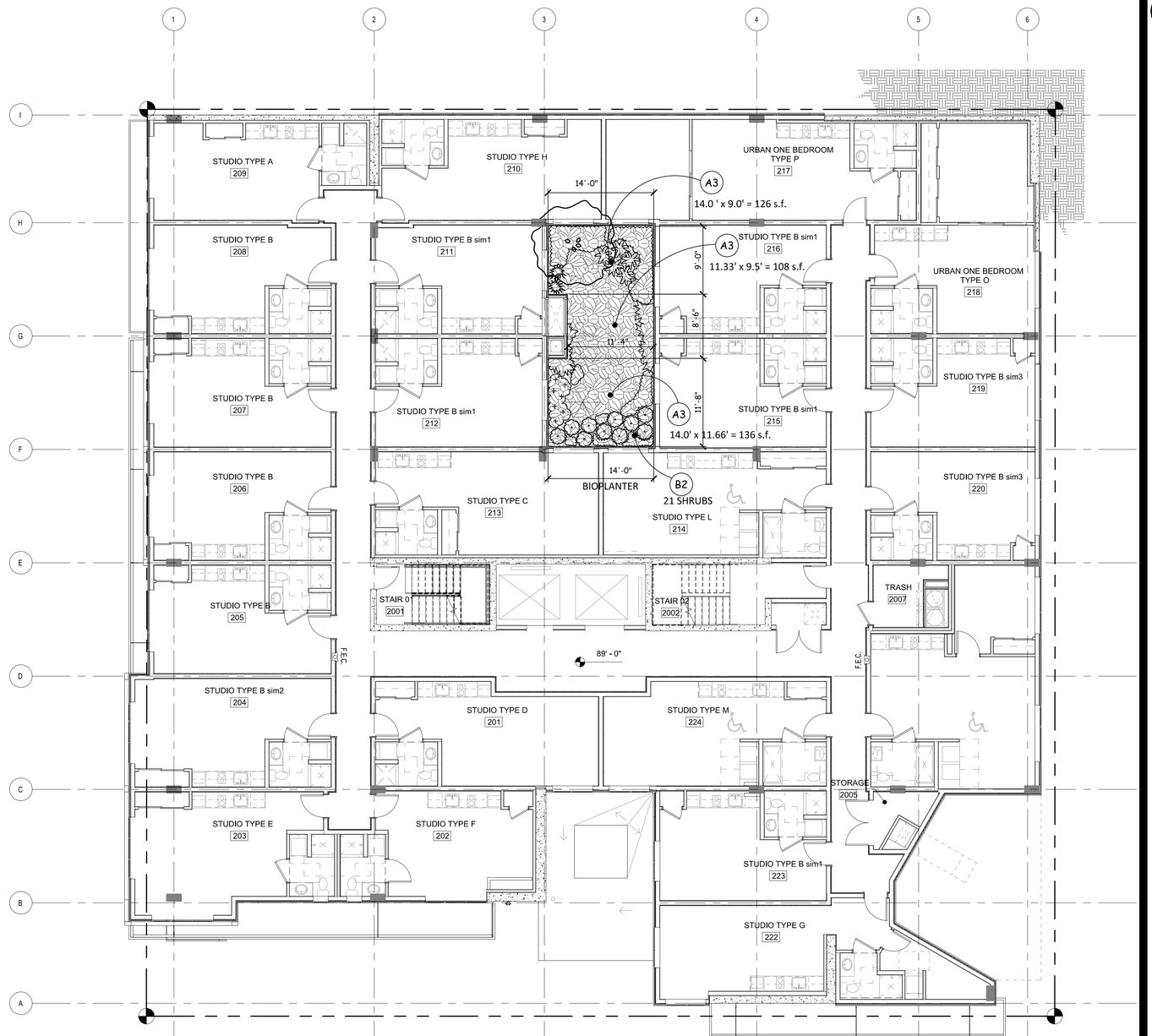

AREA 2: LIGHT WELL

A-3 : BIOPLANTER -126+108+136 = 370 s.f.
B-1 : 371 S.F.
B-2 : 21 SHRUBS

0 8 16
PLAN IN FEET

1 L-2.2 GREEN FACTOR PLAN LEVEL 0
SCALE: 1/8"=1'-0"

KEN LARGE
Landscape Architect
21803 NE 17th Court
Sammamish, Wa. 98074
Office: 425-836-4578, Cell: 206-396-7617
E-mail: klla@comcast.net
FAX: 425-898-8923

SEAL:
STATE OF WASHINGTON REGISTERED LANDSCAPE ARCHITECT
Ken Large
KENNETH E. LARGE
KLLA LANDSCAPE ARCHITECT, INC.
CERTIFICATE #301

BLOSSUM APARTMENTS
214-220 5TH AVENUE SOUTH
SEATTLE, WASHINGTON

JOB NUMBER:
DRAWN: KEL
CHECKED:
DATE: JANUARY 21,2021
REVISIONS:
1 -

SHEET TITLE:
GREEN FACTOR PLAN
LEVEL 02
PERMIT SET

SHEET NUMBER:
L-2.2

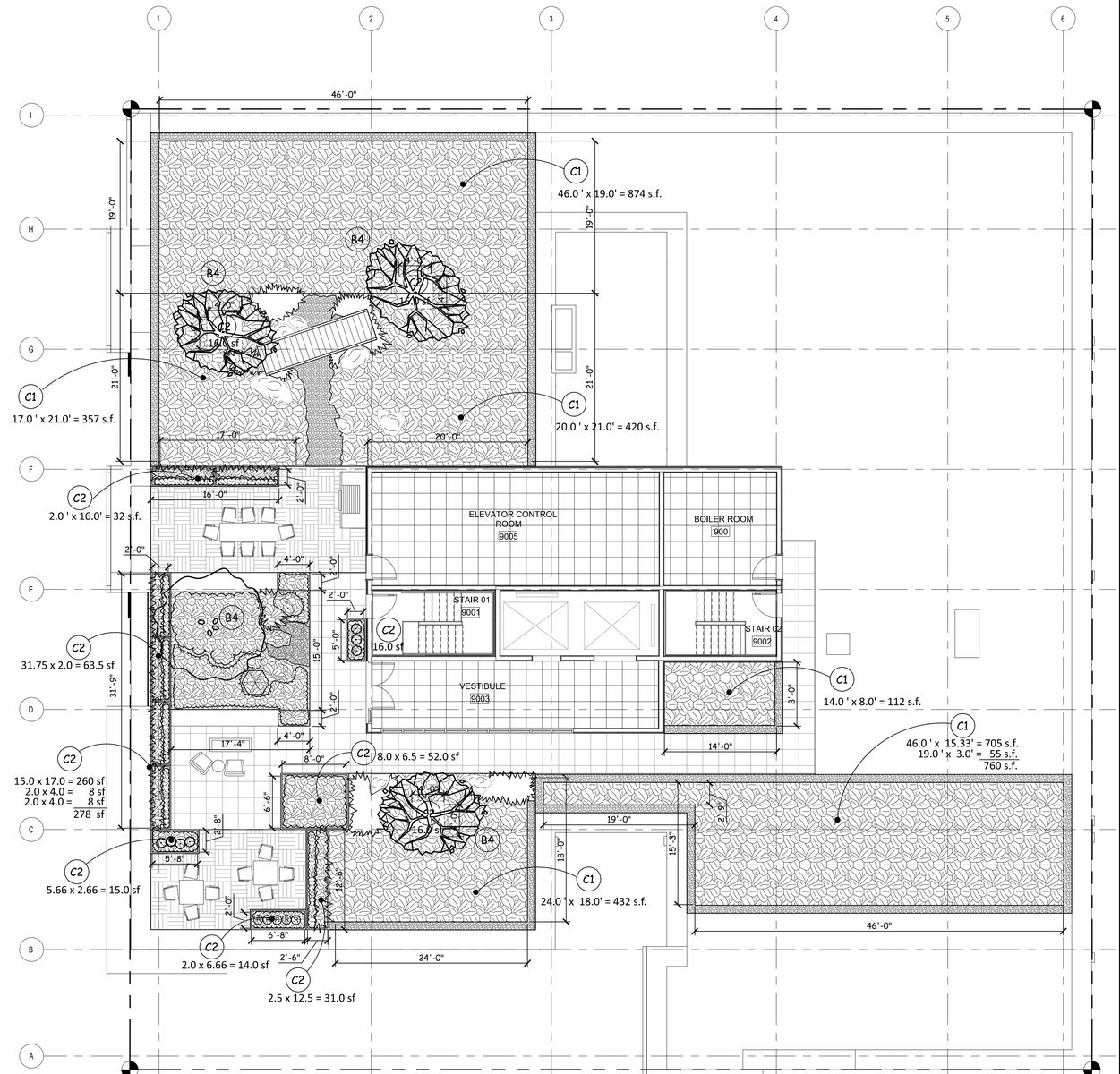

AREA 3: ROOF

B-1 : 2965 S.F.
B-2 : 49 SHRUBS
B-3: 4 TREES
C-1 : 357+874+420+112+432+760 = 2965 S.F.
C-2 : 16+16+357+32+63.5+16+
278+52+15+14+31+16 = 906.5 S.F.
F-1 : 125 S.F.
H-1 : 3871 S.F.

0 8 16
PLAN IN FEET

1 L-2.3 GREEN FACTOR PLAN - ROOF
SCALE: 1/8"=1'-0"

KEN LARGE
Landscape Architect
21803 NE 17th Court
Sammamish, Wa. 98074
Office: 425-836-4578, Cell: 206-396-7617
E-mail: klla@comcast.net
FAX: 425-898-8923

SEAL:

STATE OF WASHINGTON REGISTERED LANDSCAPE ARCHITECT
Ken Large
KENNETH E. LARGE
KLLA LANDSCAPE ARCHITECT, INC.
CERTIFICATE #301

BLOSSUM APARTMENTS
214-220 5TH AVENUE SOUTH
SEATTLE, WASHINGTON

JOB NUMBER:
DRAWN: KEL
CHECKED:
DATE: JANUARY 21,2021
REVISIONS:
1 -

SHEET TITLE:
GREEN FACTOR PLAN
ROOF PLAN
PERMIT SET

SHEET NUMBER:
L-2.3

BLOSSOM LOW VOLTAGE LIGHTING SCHEDULE

Item	Symbol	Fixture picture	Manufacturer	Model number	Quantity
Path lights AT ROOF	A		FX 36.25" hat	DL BRONZE .33 FOOTCANDLES AT 6 FEET, refer to detail for special mounting base plate.	6
Uplights UPLIGHTING TREES	B		FX	MU LED35 WATT FLOOD	9
LIP lights UNDER BENCHES	C		FX	C-LL 20 W LED AB BRONZE 6.9" WIDTH .4 FOOTCANDLES AT 12', See Bench detail	15
Planter light for pathways on roof, CUT INTO PLANTERS	D		FX	HS with integrated led 40w LIGHT, 8" WIDTH Surface mount to the side of the planter. Feed wire through the planter.	10
Wall lights AT GROUND LEVEL BAMBOO	E		FX	CWW LED 35 WATT AB3	6
Downlights IN SECOND LEVEL ENCLOSED GARDEN	F		KICHLER	15087 AZT 5 WATT. MR16	3
transformer	G		KICHLER	TRANSFORMER WITH PHOTOCELL AND TIMER 15pr100ss	2 AT 100 WATTS, 1 AT 50 WATTS
Well lights	H		FX RP-CW MD LED, 20 WATT FLOOD, 4.4 FOOTCANDLES AT 12'		2
Wall Sconce Light	I		Modern Forms 110 volt	WS-W5521	4
Exterior Stair light	J		FX 20 watt 12 volt 2.3 foot candles at 5.3 ft.	LM	4
Canopy lights	K	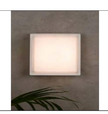	Tech Lighting, 12 LED's 5 " square, 120 volt	7000 WBX Small, 3000 color temp, bronze	26

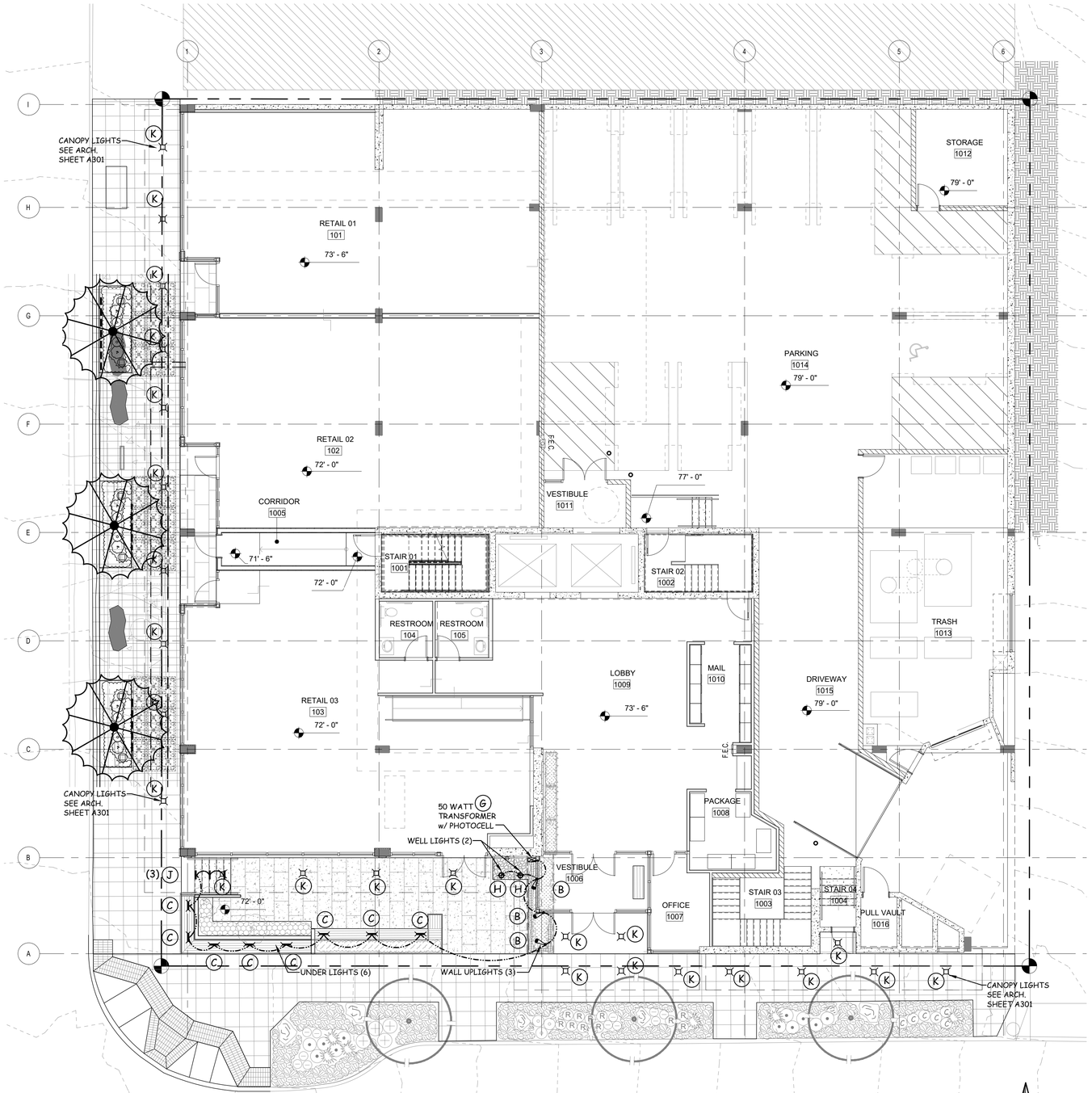

3 L-3.1 LIGHTING PLAN - GROUND LEVEL

SCALE: 1/8" = 1'-0"

0 8 16 PLAN IN FEET

KEN LARGE
Landscape Architect
21803 NE 17th Court
Sammamish, Wa. 98074
Office: 425-836-4578, Cell: 206-396-7617
E-mail: klla@comcast.net
FAX: 425-898-8923

SEAL:

STATE OF WASHINGTON REGISTERED LANDSCAPE ARCHITECT
Ken Large
KENNETH E. LARGE
KLLA LANDSCAPE ARCHITECT, INC.
CERTIFICATE #301

BLOSSUM APARTMENTS
214-220 5TH AVENUE SOUTH
SEATTLE, WASHINGTON

JOB NUMBER:
DRAWN: KEL
CHECKED:
DATE: MARCH 12,2021
REVISIONS:

1	PLANTER SCHE. 04/03/21
2	MUP COMMENT 04/19/21

SHEET TITLE:

LIGHITNG PLAN & DETAILS

GROUND LEVEL

PERMIT SET

SHEET NUMBER:

L-3.1

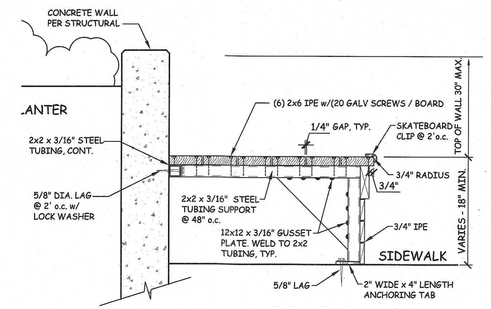

4 L-1.0 STREET LEVEL BENCH

SCALE: 1"=1'-0"

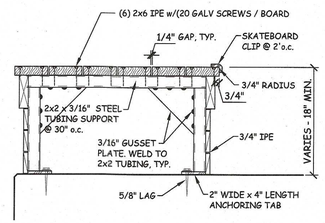

3 L-1.0 PLAZA LEVEL BENCH

SCALE: 1"=1'-0"

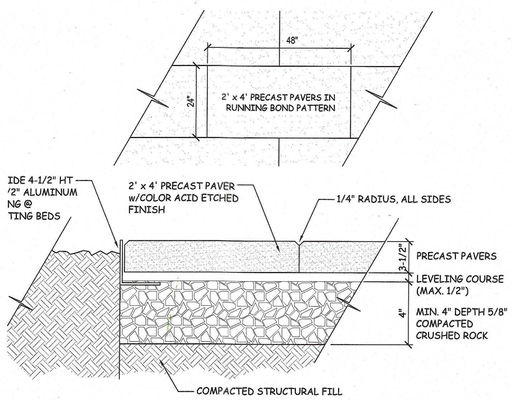

2 L-1.0 PATIO PAVER DETAIL

SCALE: 1-1/2"=1'-0"

PLANT LIST STREET LEVEL

QUAN.	SYMBOL	PLANT NAME	SIZE
42	ACOR	ACORUS PUSILLUS MINIMUS AUREUS	1 GALLON CAN
4	BERB	BERBERIS GLADWYNENSIS WILLIAM PENN/ WILLIAM PENNBARBERRY	1 GALLON CAN 18" HEIGHT
6	CHAN	CHANOMELES TOYO NISHIKI/ QUINCE	2 GALLON CAN
216	COTD	COTONEASTER DAMMERI LOW FAST	4" POTS
10	ERYN	ERYNGIUM ZABELII " BIG BLUE"(SEA HOLLY)	ONE GALLON
11	ESC	ESCALLONIA NEWPORT DWARF	5 GALLON CAN
2	HYDP	HYDRANGEA PANNICULATA TARDIVA	5 GALLON
12	ICC	ILEX CRENATA COMPACTA JAPANESE HOLLY	10 GALLON CAN, 18 to 21" ht and width or B/B
4	IRISK	IRIS KAMPFERI/ JAPANESE IRIS	1 GALLON
48	LIRS	LIROPE SPICATA/ SPREADING LIROPE	QUARTS AT 18" TRI SPACING
4	NEPT	NEPTETA CATARIA WALKERS LOW CATNIP	1 GALLON CAN
13	PENNV	PENNISETUM BURGUNDY BUNNY	1 GALLON CAN
32	PHYLLO	PHYLLOSTACHYS NIGRA/ BLACK BAMBOO	15 GALLON CAN, 7 STEMS MIN. PER CONTAINER
3	PRUNE	PRUNUS SARGENTII/ PINK FLAIR SARGENTS CHERRY	2.5 " CALIPER B/B, STREET TREE TO CONFORM TO SDOT STANDARDS
10	RAPH	RAPHIOLEPSIS UMBELLATA MINOR	5 GALLON CAN

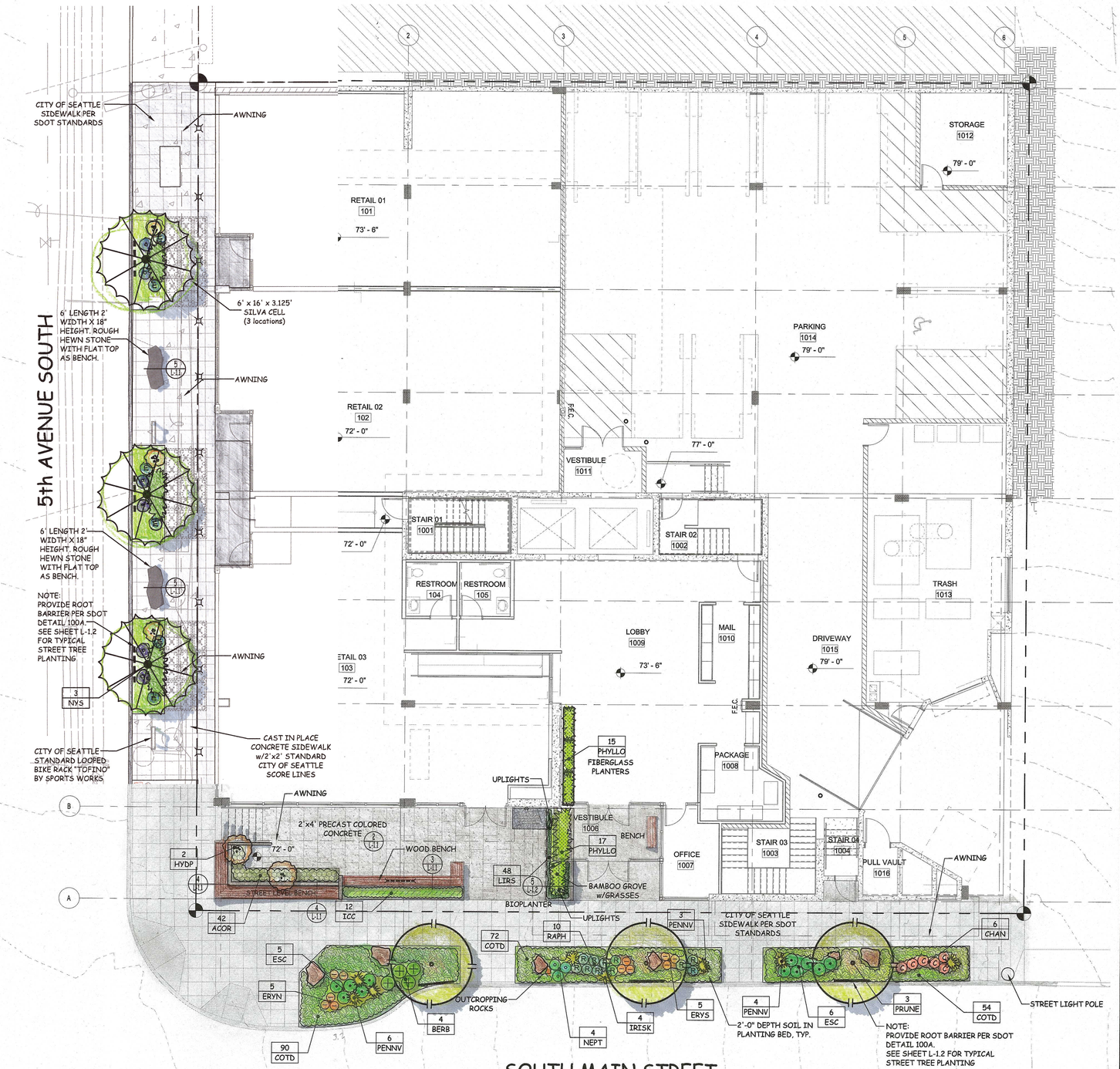

LANDSCAPING

IN NEW LANDSCAPE AREAS: PROVIDE 3" DEPTH OF COMPOSTED ORGANIC MATERIAL AND ROTOTILL INTO THE SUBGRADES TO A DEPTH OF 6 INCHES. OVER THE TOP OF THE PREPARED SUBGRADES PROVIDE AN ADDITIONAL 6" OF PACIFIC TOPSOILS 60/40 SOIL .

PROVIDE LAYOUT OF PLANT MATERIAL FOR APPROVAL OF THE LANDSCAPE ARCHITECT. SUBSTITUTIONS OF PLANT MATERIAL WITHOUT PRIOR AUTHORIZATION IS NOT ALLOWED AND THE PLANT MATERIAL REMOVED WITHOUT COMPENSATION.

INSTALL PLANTS FOR BEST ORIENTATION AND CLEAN UNIFORM ROWS AT PROPER PLANTING DEPTH.

UPON APPROVAL OF THE FINAL PLANTING LAYOUT, PROVIDE 2" DEPTH PACIFIC TOPSOILS COMP. MULCH.

PROVIDE ONE YEAR WARRANTY ON ALL PAVING AND PLANTING.

IRRIGATION

IRRIGATION IS NETAFIN DRIP TUBING AT 12" o.c.

w/ EMITTERS AT 9" ON CENTER. PROVIDE RAINBIRD ESP

CLOCK w/ AUTOMATIC WIRELSS RAIN SENSOR.

NOTES FOR STREET TREES:

- TREES ARE TO BE A MINIMUM OF 2-2.5" CALIPER.
- SOIL IS TO BE AMENDED PER COS PLAN 142.
- STREET TREES ARE TO BE PLANTED PER COS PLAN 100A.
- PROVIDE 18" DEEP X 6' LENGTH ROOT BARRIER, CENTERED TO EACH TREE AND PLACED ALONG THE SIDEWALK EDGE AT EACH STREET TREE, TYPICAL.
- NOTIFY SDOT URBAN FORESTRY TWO WORKING DAYS PRIOR TO PLANTING (206-684-5693). TO REVIEW SIZE, QUALITY AND LOCATION OF THE STREET TREES.
- STREET TREES SHALL RECEIVE SUPPLEMENTAL WATER FOR THE FIRST THREE GROWING SEASONS FOLLOWING PLANTING.

CALL BEFORE YOU DIG

CALL 811 OR 1 800 424 5555 AT LEAST TWO BUSINESS DAYS PRIOR TO DIGGING OPERATIONS

0 8 16
PLAN IN FEET

1 L-1.1 LANDSCAPE PLAN GROUND LEVEL

SCALE: 1/8"=1'-0"

KEN LARGE
Landscape Architect
21803 NE 17th Court
Sammamish, Wa. 98074
Office: 425-836-4578, Cell: 206-396-7617
E-mail: klla@comcast.net
FAX: 425-898-8923

SEAL:

STATE OF WASHINGTON REGISTERED LANDSCAPE ARCHITECT
Ken Large
KENNETH E. LARGE
KLLA LANDSCAPE ARCHITECTS, INC.
CERTIFICATE #301

BLOSSUM APARTMENTS
214-220 5TH AVENUE SOUTH
SEATTLE, WASHINGTON

JOB NUMBER:
DRAWN: KEL
CHECKED:
DATE: JANUARY 15,2021
REVISIONS:
1 -

SHEET TITLE:
COLORED LANDSCAPE PLAN & DETAILS
GROUND LEVEL
MUP SUBMITTAL

SHEET NUMBER:
L-3.1

NOTES:

1. REMOVE STAKES ONE YEAR AFTER INSTALLATION.
2. SHAPE SOIL SURFACE TO PROVIDE 4' DIA WATERING RING.
3. TREE CLEARANCE MUST BE PER STD PLAN NO 030.
4. SEE STD PLAN NO 424 FOR TREE PIT DETAIL.
5. ADJUST TREE TIES DURING ESTABLISHMENT TO ALLOW ROOM FOR GROWTH (@1" SLACK).
6. ROOT BARRIER REQUIRED ALONG EDGE OF ROADWAY, CURB, DRIVEWAY, TRAIL, SIDEWALK, OR OTHER STRUCTURES WHERE ROOTBALL IS WITHIN TWO FEET; PLACE VERTICAL ROOTBARRIER AS SHOWN IN STANDARD PLANS NO 424a OR 424b. INSTALL ROOT BARRIERS FOR NEWLY PLANTED TREES ONLY.

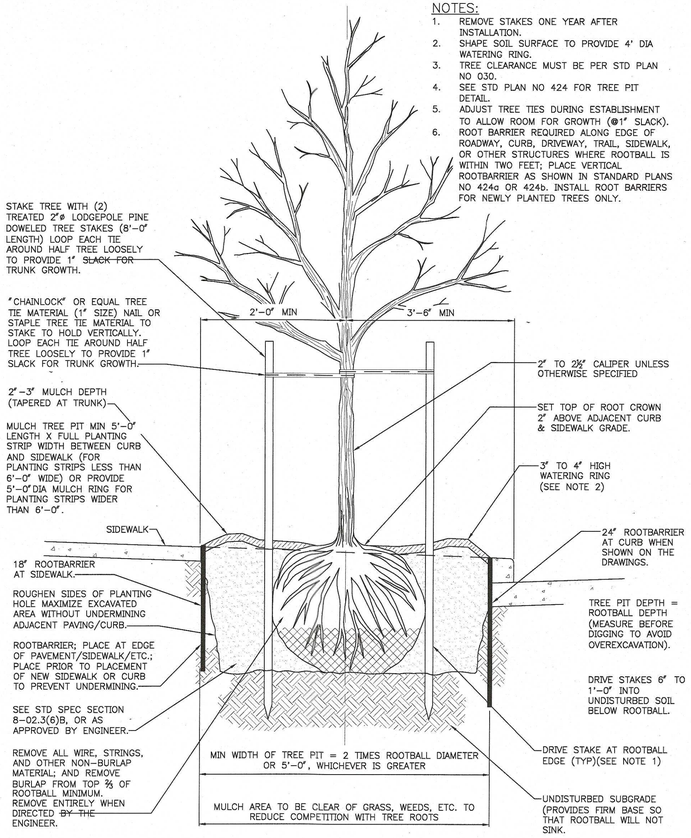

4 L-1.2 STREET TREE PLANTING IN PLANTING STRIP

SCALE: N.T.S.

SPACING "A"	SPACING "B"	# OF PLANTS/SF
6" o.c.	5.20"	4.60
8" o.c.	6.93"	2.60
10" o.c.	8.66"	1.66
12" o.c.	10.40"	1.15
15" o.c.	13.00"	.738
18" o.c.	15.60"	.512
24" o.c.	20.80"	.290
30" o.c.	26.00"	.185
36" o.c.	30.00"	.116

SEE GROUNDCOVER PLANT KEY FOR MAXIMUM TRIANGULAR SPACING "A". THIS CHART IS TO BE USED TO DETERMINE NUMBER OF GROUNDCOVER PLANTS REQUIRED IN A GIVEN AREA.

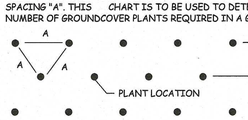

PLANT SPACING CHART
FOR USE WHEN PLANTS ARE SPACED EQUIDISTANT FROM EACH OTHER, AS IN ALL MASSED SHRUB/GROUNDCOVER PLANTINGS

3 L-1.2 PLANT SPACING CHART

SCALE: N.T.S.

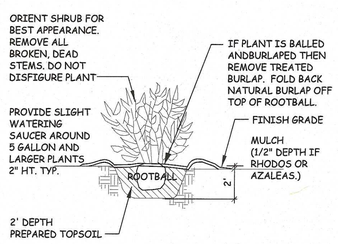

2 L-1.2 TYPICAL SHRUB PLANTING

SCALE: N.T.S.

PLANT LIST LEVEL 2

QUAN.	SYMBOL	PLANT NAME	SIZE
1	ACERP	ACER SHIRASAWANUM/ FULL MOON MAPLE	6-7'- B/B
5	BAMB	ARTIFICAL BAMBOO	8-12' MINIMUM 18 STEMS FROM ARTIFICAL PLANTS UNLIMITED
2	MAHC	MAHONIA CHARITY/ CHARITY OREGON GRAPE	5 GALLON CAN, 18 INCH HEIGHT 3' TRI. SPACING
10	NAN	NANDINA DOMESTICA GULF STREAM/ HEAVENLY BAMBOO	5 GALLON CAN
5	POLYB	POLYSTICHUM POLYBLEHARUM TASSEL FERN	1 GALLON CAN
90	SAG	SAGINA SUBULATA/ IRISH MOSS	4" POTS
6	SARC	SARCOCOCCA RUSKIFOLIA FRAGRANT SARCOCOCCA	1 GALLON

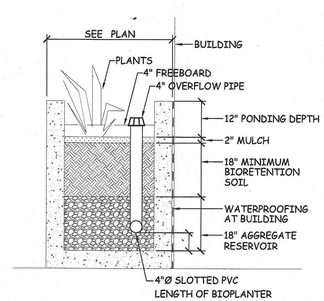

5 L-1.2 BIOPLANTER SECTION (CONCRETE)

SCALE: 1/2"=1'-0"

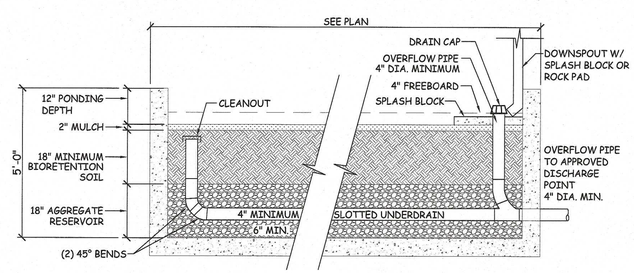

IRRIGATION

IRRIGATION IS NETAFIN DRIP TUBING AT 12" o.c. w/ EMITTERS AT 9" ON CENTER. PROVIDE RAINBIRD ESP CLOCK w/ AUTOMATIC WIRELSS RAIN SENSOR.

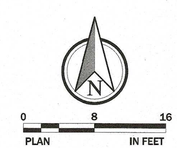

1 L-1.2 LANDSCAPE PLAN LEVEL 02

SCALE: 1/8"=1'-0"

KEN LARGE
Landscape Architect
21803 NE 17th Court
Sammamish, Wa. 98074
Office: 425-836-4578, Cell: 206-396-7617
E-mail: klla@comcast.net
FAX: 425-898-8923

SEAL:

STATE OF WASHINGTON REGISTERED LANDSCAPE ARCHITECT
KENNETH E. LARGE
KLLA LANDSCAPE ARCHITECTS, INC.
CERTIFICATE #301

BLOSSUM APARTMENTS
214-220 5TH AVENUE SOUTH
SEATTLE, WASHINGTON

JOB NUMBER:
DRAWN: KEL
CHECKED:
DATE: JANUARY 15,2021
REVISIONS:
1 -

SHEET TITLE:
COLORED LANDSCAPE PLAN & DETAILS

LEVEL 02
MUP SUBMITTAL

SHEET NUMBER:
L-3.2

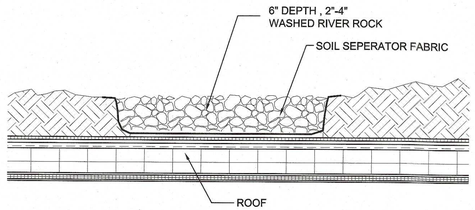

5 / L-1.3 WASHED ROCK DETAIL
SCALE: "=1'-0"

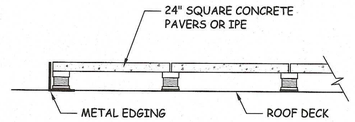

4 / L-1.3 PEDESTAL ROOF PAVERS/ICP DECKING
SCALE: "=1'-0"

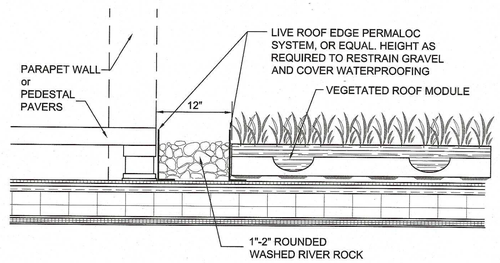

3 / L1-3 GRAVEL EDGE AT GREEN ROOF
SCALE: 1/2 "=1'-0"

ROOF GARDEN PLANTERS (Blossom)

Manufactured by Planter Technologies
Brandon McCormick
Regional Sales Manager | Carlsbad Manufacturing
6056 Corte Del Cedro Carlsbad, CA 92011
P: 877-595-9732 x741 | F: 877-595-9732

#	X"	Y"	HEIGHT	QUANTITY	COMMENT
1	30"	24"	42"		FIBERGLASS, BLACK WITH DRAIN HOLES
2	30"	24"	42"		"
3	30"	24"	42"		"
4	16	72	36		"
5	16	84	36		"
6	30	30	42		"
7	30	30	42		"
8	30	30	42		"
9	30	30	42		"
10	30	30	42		"
11	16	72	24		"
12	16	72	24		"

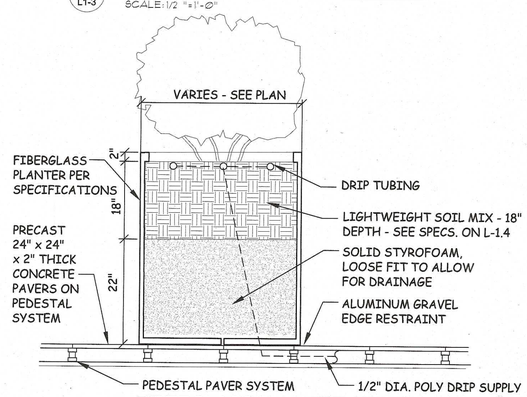

2 / L-1.3 FIBERGLASS PLANTER SECTION
SCALE: NTS

PLANT LIST ROOF LEVEL

QUAN.	SYMBOL	PLANT NAME	SIZE
1	ACERG	ACER DISSECTUM GARNET/ GARNET MAPLE	6-7 ' HT AND 4' WIDTH, SPECIMEN, WIGGINS NURSERY
51	ACOR	ACORUS PUSILLUS MINIMUS AUREUS	1 GALLON CAN
16	CAMP	CAMPANULA PORTENSCHLAGIANABELLFLOWER	1 GALLON CAN
32	CAREX	CAREX TESTACEA/ ORANGE SEDGE	1 GALLON CAN
16	IBER	IBERIS SEMPERVIRENS/ CANDYTUFT	4" POTS
32	LAVD	LAVENDULA DENDATA/ FRENCH LAVENDAR	1 GALLON
90	LIRS	LIROPE SPICATA/ SPREADING LIROPE	QUARTS AT 18" TRI SPACING
6	MISC	MISCANTHUS SINENSIS GRACILIMUS	1 GALLON CAN WIGGINS
12	MISCYJ	MISCANTHUS YAKU JIMA	1 GALLON
7	NAN	MAHONIA SOFT CARESS	5 GALLON CAN
37	PHYLLO	PHYLLOSTACHYS AUREA/ GOLDEN BAMBOO	15 GALLON CAN, 7 CANES PER CONTAINER MIN.
3	PIN	PINUS DENSIFLORA HINDU PAN	10-12' SPECIMEN, WIGGINS NURSERY
5	RAPH	RAPHIOLEPSIS UMBELLATA MINOR	5 GALLON CAN
18	SCHIZ	SCHIZOSTYLIS COCCINEA KAFIR LILY	1 GALLON CAN
100	SED	SEDUM TRAYS 1' X 2' : MIX OF THREE DIFFERENT SEDUMS IN	TRAYS 4" DEPTH SOIL MIX
92	THYM	THYMUS PULEGIOIDES FOXLEY / FOXLEY THYYME	4" POTS

IRRIGATION

IRRIGATION IS NETAFIN DRIP TUBING AT 12" o.c. w/ EMITTERS AT 9" ON CENTER. PROVIDE RAINBIRD ESP CLOCK w/ AUTOMATIC WIRELSS RAIN SENSOR.

NOTE: SEE SHEET L-1.4 FOR SEDUM TRAY IRRIGATION, ROOF PLANTER SOIL SPECIFICATIONS, AND FIXTURE PRODUCT INFORMATION

0 8 16
PLAN IN FEET

1 / L-1.3 LANDSCAPE PLAN - ROOF
SCALE: 1/8"=1'-0"

KEN LARGE
Landscape Architect
21803 NE 17th Court
Sammamish, Wa. 98074
Office: 425-836-4578, Cell: 206-396-7617
E-mail: klla@comcast.net
FAX: 425-898-8923

SEAL:
STATE OF WASHINGTON REGISTERED LANDSCAPE ARCHITECT
KENNETH E. LARGE
KLLA LANDSCAPE ARCHITECTS, INC.
CERTIFICATE #301

BLOSSUM APARTMENTS
214-220 5TH AVENUE SOUTH
SEATTLE, WASHINGTON

JOB NUMBER:
DRAWN: KEL
CHECKED:
DATE: JANUARY 15,2021
REVISIONS:
1 -

SHEET TITLE:
COLORED LANDSCAPE PLAN & DETAILS

ROOF PLAN
MUP SUBMITTAL

SHEET NUMBER:
L-3.3

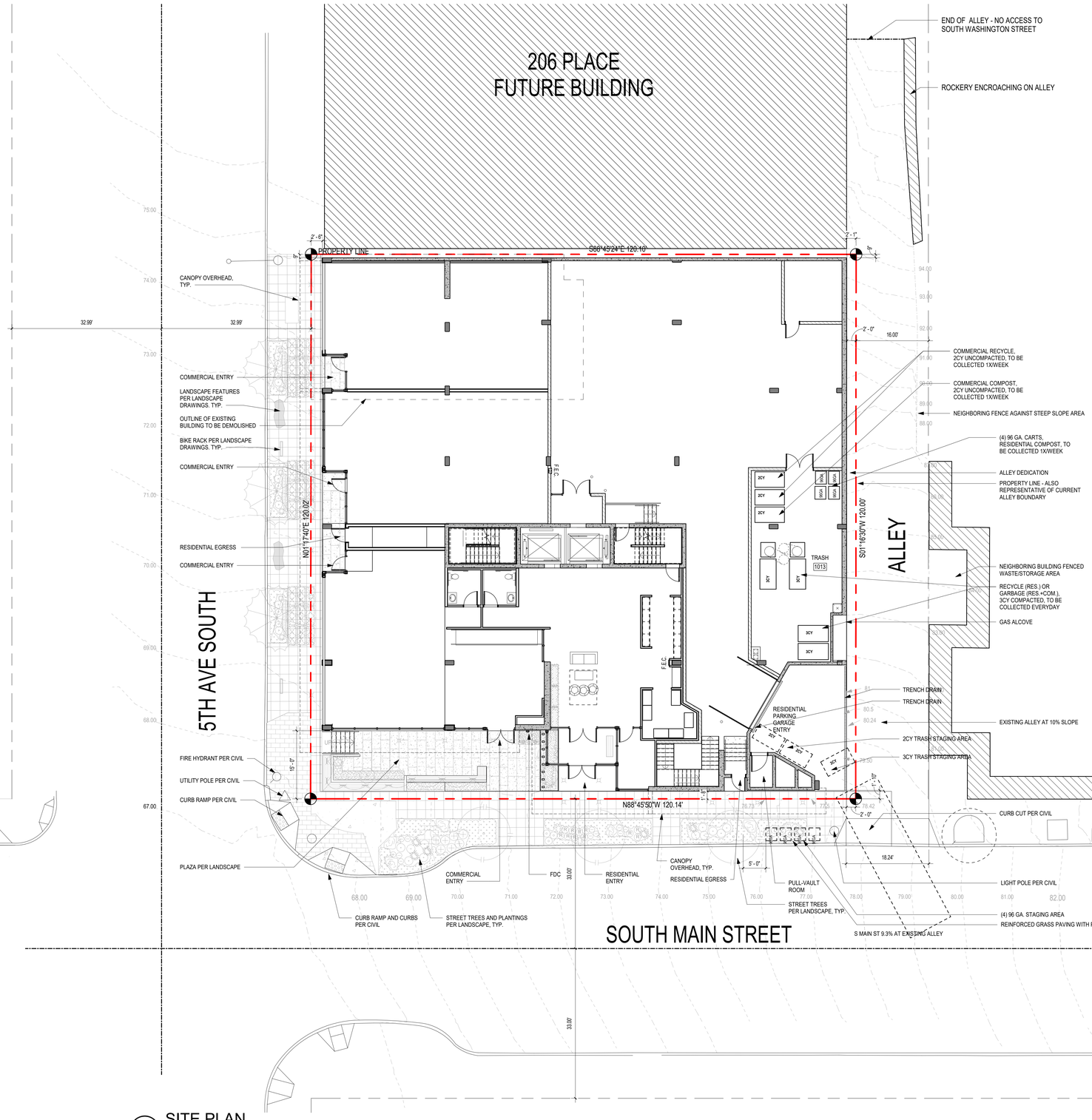

1 SITE PLAN
1" = 10'-0"

GENERAL NOTES - SITE PLAN

PROJECT ADDRESS:
214 - 220 5TH AVE. S, SEATTLE, WA 98104

ASSESOR'S PARCEL NUMBER:
982070-0100 & 524780-1545

LEGAL DESCRIPTION:
YESLER & MC INTOSHS SUPL MAYNARDS & 3 BLK 32 MAYNARDS PLAT & MAYNARDS D S PLAT

SITE PLAN NOTES:
1. SEE CIVIL DRAWINGS FOR SITE IMPROVEMENTS.
2. SEE LANDSCAPE DRAWINGS FOR SITE IMPROVEMENTS.
3. SEE SHEET G110 FOR TRASH ROOM PLAN.
4. SEE SHEET G112 FOR SLOPES AT PARKING GARAGE ENTRY.

LINK
LINK DESIGN GROUP LLC.
439 Kirkland Way
Kirkland, WA. US. 98033
+1.425.298.0080

602 Pengjiang RD, E461 ShangHai, China 200072
上海市静安区彭江路602号E座461室 邮编 200072
+86.21.6667.0228

Project No: Enter Client Supplied Number
XXXXXXXXXX

Client/Owner/Project Address

Owner
VIBRANT CITIES
606 Maynard Ave S
Suite 251
Seattle, WA 98104

Consultant

BLOSSOM APARTMENTS - COA SUBMITTAL

Issue Drawing Log

	09/04/20	INITIAL PRICING SET
	01/21/21	PERMIT SET SUBMITTAL
	03/05/21	COA SUBMITTAL

Professional Certification - I certify that these documents were prepared or approved by me, and that i am a duly licensed Architect under the laws of the state of Washington, License number _____, Expiration date _____.

8628 REGISTERED ARCHITECT
JENNY LI
STATE OF WASHINGTON

SDCI APPROVAL STAMP

©LINK DESIGN GROUP LLC.
All rights reserved. No part of this document may be reproduced in any form or by any means without permission in writing from LINK DESIGN GROUP LLC.

PROJECT NUMBER	20-0108A
PROJECT MANAGER	JX
DRAWN BY	DS, MB

Sheet Identification

ARCHITECTURAL SITE PLAN

A101

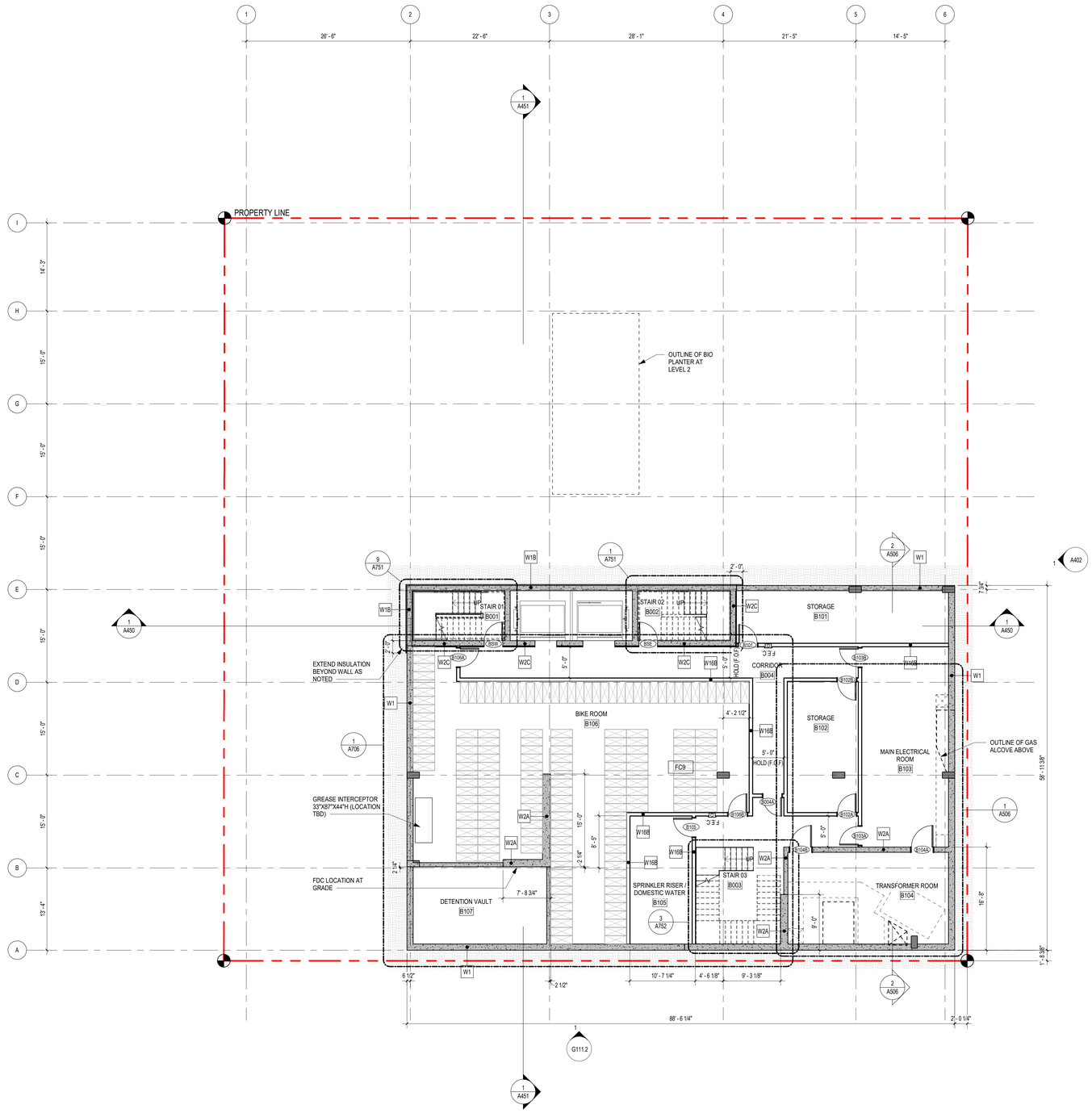

1 BASEMENT FLOOR PLAN

1/8" = 1'-0"

LINK

LINK DESIGN GROUP LLC.

439 Kirkland Way
Kirkland, WA. US. 98033
+1.425.298.0080

602 Pengjiang RD, E461 ShangHai, China 200072
上海市静安区彭江路602号E座461室 邮编 200072
+86.21.6667.0228

Project No: Enter Client Supplied Number
XXXXXXXXXX

Client/Owner/Project Address

Owner

VIBRANT CITIES
606 Maynard Ave S
Suite 251
Seattle, WA 98104

Consultant

BLOSSOM APARTMENTS - COA SUBMITTAL

Issue Drawing Log

	09/04/20	INITIAL PRICING SET
	01/21/21	PERMIT SET SUBMITTAL
	03/05/21	COA SUBMITTAL

Professional Certification - I certify that these documents were prepared or approved by me, and that i am a duly licensed Architect under the laws of the state of Washington, License number _____, Expiration date _____.

8628 REGISTERED ARCHITECT
JENNY LI
STATE OF WASHINGTON

SDCI APPROVAL STAMP

©LINK DESIGN GROUP LLC.
All rights reserved. No part of this document may be reproduced in any form or by any means without permission in writing from LINK DESIGN GROUP LLC.

PROJECT NUMBER	20-0108A
PROJECT MANAGER	JX
DRAWN BY	DS, MB

Sheet Identification

BASEMENT FLOOR PLAN

A200

GENERAL NOTES - FLOOR PLAN

1. SBC 23.54.030.D.1.a. DRIVEWAY WIDTH. DRIVEWAYS LESS THAN 100 FEET IN LENGTH THAT SERVE 30 OR FEWER PARKING SPACES SHALL BE A MINIMUM OF 10 FEET IN WIDTH FOR ONE-WAY OR TWO-WAY TRAFFIC.

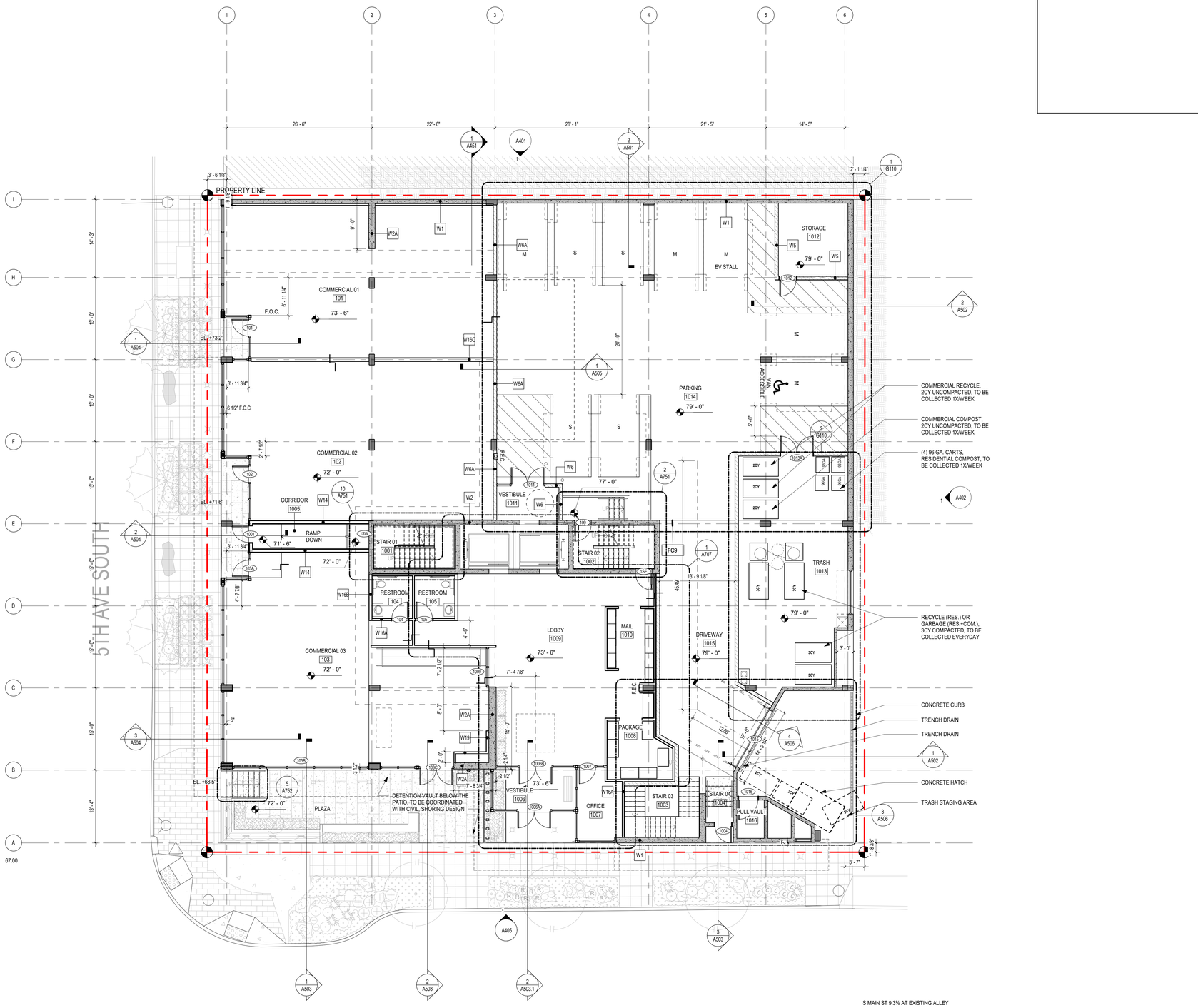

1 LEVEL 1 FLOOR PLAN
1/8" = 1'-0"

LINK
LINK DESIGN GROUP LLC.
439 Kirkland Way
Kirkland, WA. US. 98033
+1.425.298.0080

602 Pengjiang RD, E461 ShangHai, China 200072
上海市静安区彭江路602号E园461室 邮编 200072
+86.21.6667.0228

Project No: Enter Client Supplied Number XXXXXXXXXX

Client/Owner/Project Address

Owner
VIBRANT CITIES
606 Maynard Ave S
Suite 251
Seattle, WA 98104

Consultant

BLOSSOM APARTMENTS - COA SUBMITTAL

Issue Drawing Log

	09/04/20	INITIAL PRICING SET
	01/21/21	PERMIT SET SUBMITTAL
	03/05/21	COA SUBMITTAL

Professional Certification - I certify that these documents were prepared or approved by me, and that I am a duly licensed Architect under the laws of the state of Washington, License number _____. Expiration date _____.

8628 REGISTERED ARCHITECT
JENNY LI
STATE OF WASHINGTON

SDCI APPROVAL STAMP

©LINK DESIGN GROUP LLC.
All rights reserved. No part of this document may be reproduced in any form or by any means without permission in writing from LINK DESIGN GROUP LLC.

PROJECT NUMBER	20-0108A
PROJECT MANAGER	JX
DRAWN BY	DS, MB

Sheet Identification

1ST FLOOR PLAN

A201

GENERAL NOTES - FLOOR PLAN

1. SEE DETAIL 1/A310 FOR ENLARGED LEVEL 2 CORRIDOR PLAN.
2. SEE DETAIL 1/A311 FOR ENLARGED LEVELS 3-7 CORRIDOR PLAN.
3. SEE DETAIL 1/A312 FOR ENLARGED LEVEL 8 CORRIDOR PLAN.
4. FLOOR PLAN DIMENSIONS ARE FROM FACE OF STUD (FOS) UNLESS NOTED OTHERWISE (UNO).
5. PARTY WALLS ARE CENTERED ON GRIDLINE, UNO.
6. SEE ENLARGED UNIT PLANS FOR WALL DIMENSIONS AND WALL TYPES.

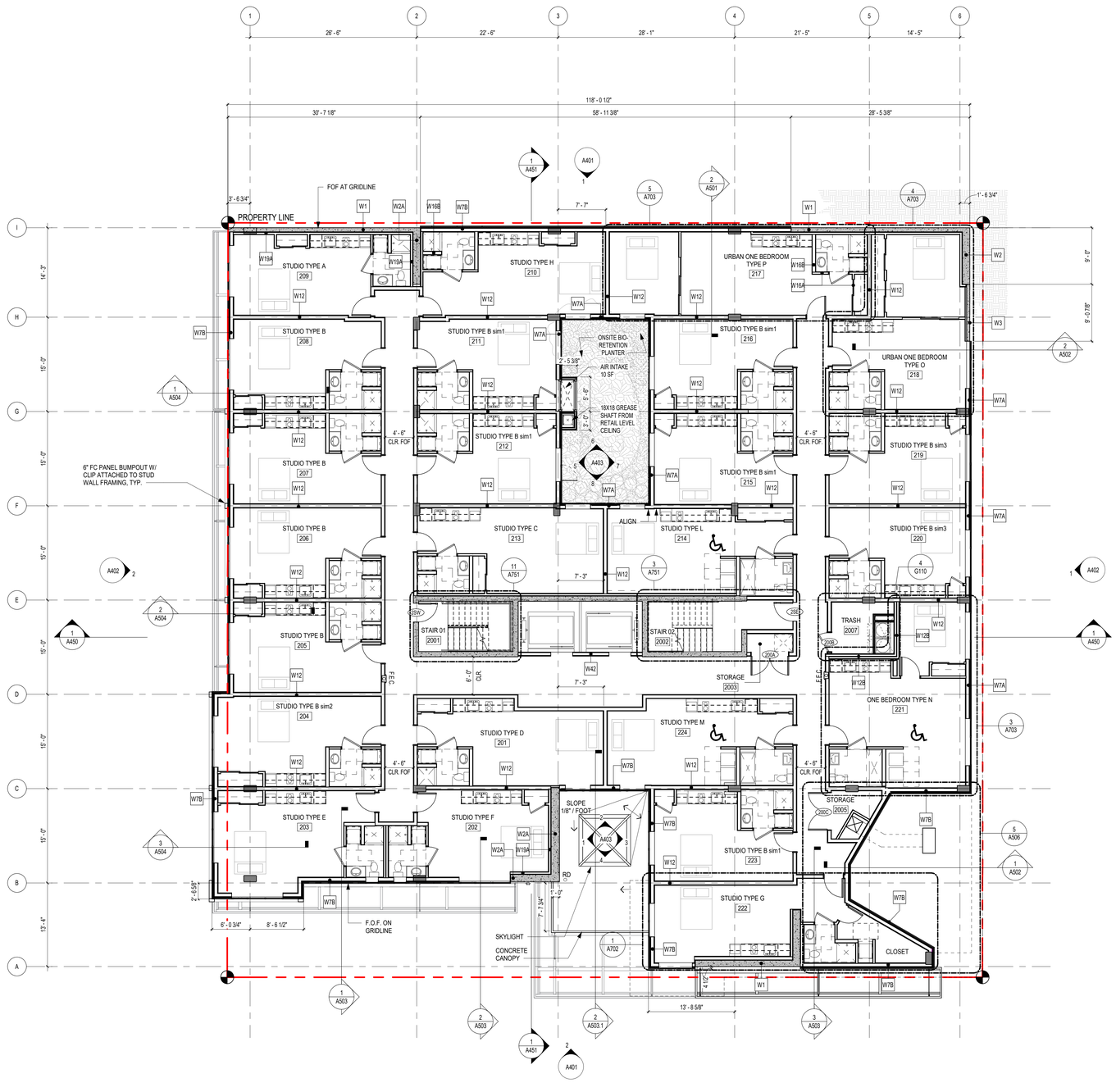

1 LEVEL 2 FLOOR PLAN

1/8" = 1'-0"

LINK

LINK DESIGN GROUP LLC.

439 Kirkland Way
Kirkland, WA. US. 98033
+1.425.298.0080

602 Pengjiang RD, E461 ShangHai, China 200072
上海市静安区彭江路602号E座461室 邮编 200072
+86.21.6667.0228

Project No: Enter Client Supplied Number
XXXXXXXXXX

Client/Owner/Project Address

Owner
VIBRANT CITIES
606 Maynard Ave S
Suite 251
Seattle, WA 98104

Consultant

BLOSSOM APARTMENTS - COA SUBMITTAL

Issue Drawing Log

	09/04/20	INITIAL PRICING SET
	01/21/21	PERMIT SET SUBMITTAL
	03/05/21	COA SUBMITTAL

Professional Certification - I certify that these documents were prepared or approved by me, and that I am a duly licensed Architect under the laws of the state of Washington, License number _____, Expiration date _____.

8628 REGISTERED ARCHITECT
JENNY LI
STATE OF WASHINGTON

SDCI APPROVAL STAMP

©LINK DESIGN GROUP LLC.
All rights reserved. No part of this document may be reproduced in any form or by any means without permission in writing from LINK DESIGN GROUP LLC.

PROJECT NUMBER	20-0108A
PROJECT MANAGER	JX
DRAWN BY	DS, MB

Sheet Identification

2ND FLOOR PLAN

A202

GENERAL NOTES - FLOOR PLAN

1. SEE DETAIL 1/A310 FOR ENLARGED LEVEL 2 CORRIDOR PLAN.
2. SEE DETAIL 1/A311 FOR ENLARGED LEVELS 3-7 CORRIDOR PLAN.
3. SEE DETAIL 1/A312 FOR ENLARGED LEVEL 8 CORRIDOR PLAN.
4. FLOOR PLAN DIMENSIONS ARE FROM FACE OF STUD (FOS) UNLESS NOTED OTHERWISE (UNO).
5. PARTY WALLS ARE CENTERED ON GRIDLINE, UNO.
6. SEE ENLARGED UNIT PLANS FOR WALL DIMENSIONS AND WALL TYPES.

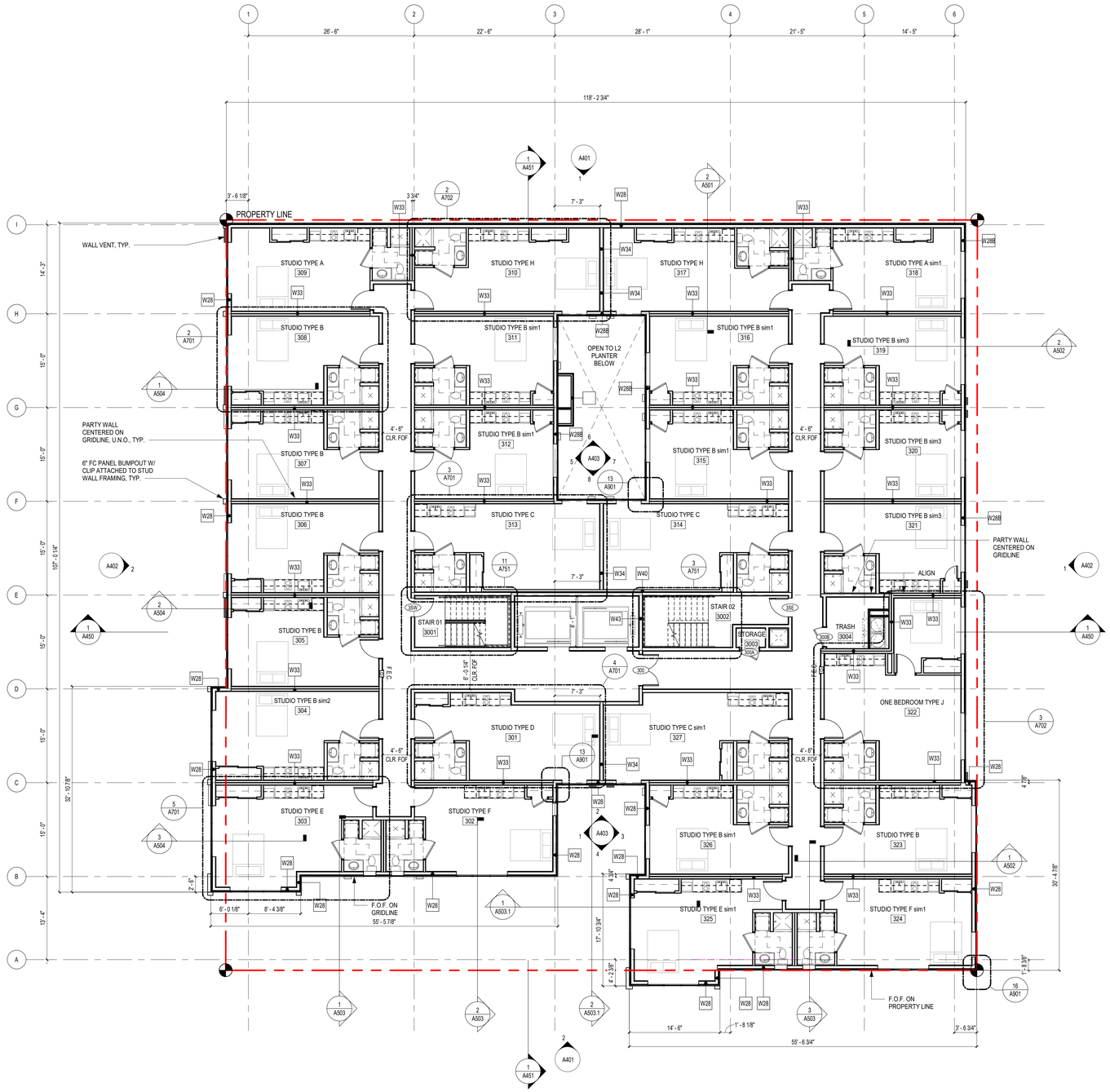

1 LEVEL 3 FLOOR PLAN

1/8" = 1'-0"

N

LINK

LINK DESIGN GROUP LLC.

439 Kirkland Way
Kirkland, WA. US. 98033
+1.425.298.0080

602 Pengjiang RD, E461 ShangHai, China 200072
上海市静安区彭江路602号E座461室 邮编 200072
+86.21.6667.0228

Project No: Enter Client Supplied Number
XXXXXXXXXX

Client/Owner/Project Address

Owner
VIBRANT CITIES
606 Maynard Ave S
Suite 251
Seattle, WA 98104

Consultant

BLOSSOM APARTMENTS - COA SUBMITTAL

Issue Drawing Log

	09/04/20	INITIAL PRICING SET
	01/21/21	PERMIT SET SUBMITTAL
	03/05/21	COA SUBMITTAL

Professional Certification - I certify that these documents were prepared or approved by me, and that i am a duly licensed Architect under the laws of the state of Washington, License number _____, Expiration date _____.

8628 REGISTERED ARCHITECT
Jenny Li
JENNY LI
STATE OF WASHINGTON

SDCI APPROVAL STAMP

©LINK DESIGN GROUP LLC.
All rights reserved. No part of this document may be reproduced in any form or by any means without permission in writing from LINK DESIGN GROUP LLC.

PROJECT NUMBER	20-0108A
PROJECT MANAGER	JX
DRAWN BY	DS, MB

Sheet Identification

3RD FLOOR PLAN

A203

GENERAL NOTES - FLOOR PLAN

1. SEE DETAIL 1/A310 FOR ENLARGED LEVEL 2 CORRIDOR PLAN.
2. SEE DETAIL 1/A311 FOR ENLARGED LEVELS 3-7 CORRIDOR PLAN.
3. SEE DETAIL 1/A312 FOR ENLARGED LEVEL 8 CORRIDOR PLAN.
4. FLOOR PLAN DIMENSIONS ARE FROM FACE OF STUD (FOS) UNLESS NOTED OTHERWISE (UNO).
5. PARTY WALLS ARE CENTERED ON GRIDLINE, UNO.
6. SEE ENLARGED UNIT PLANS FOR WALL DIMENSIONS AND WALL TYPES.

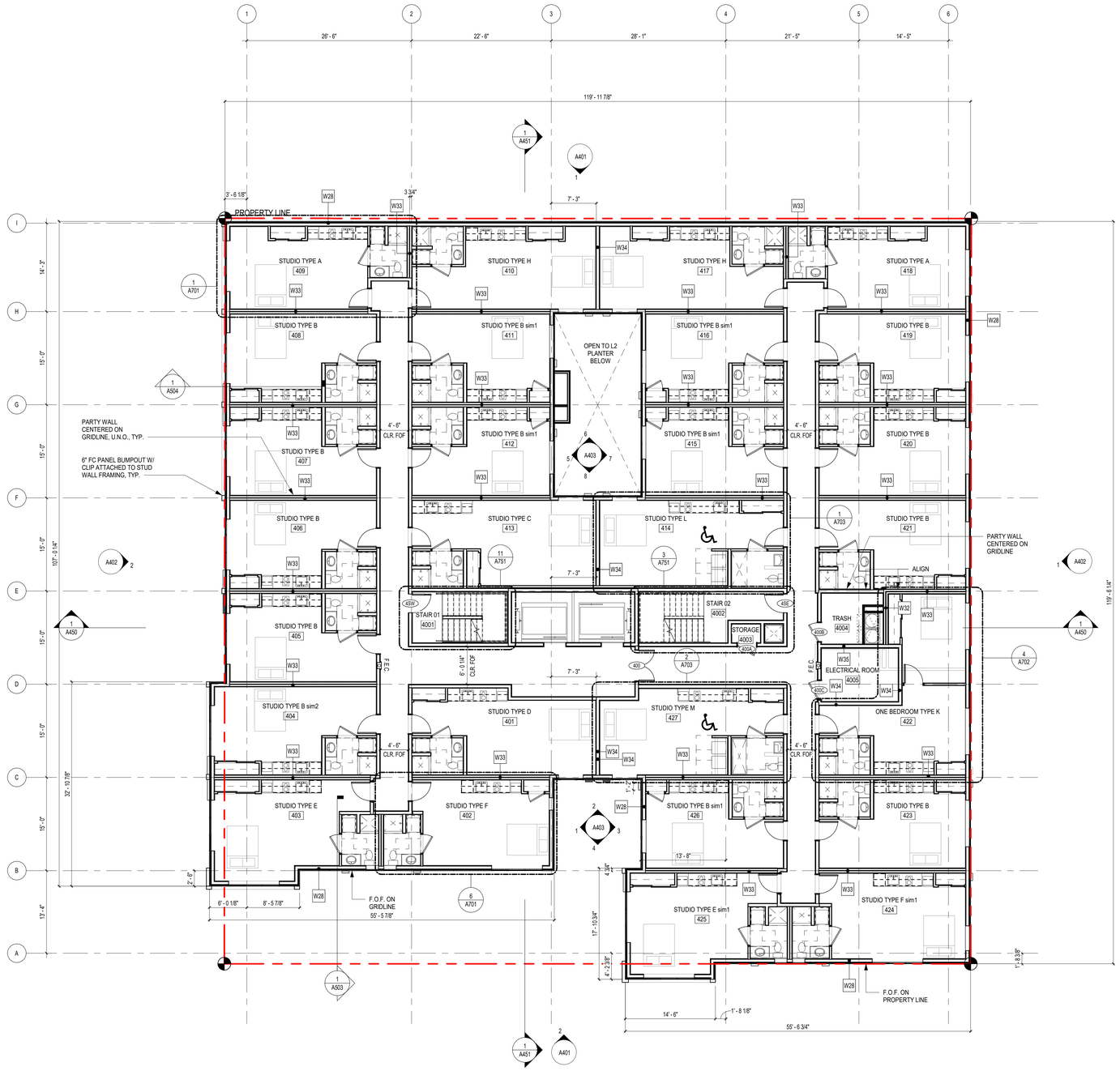

1 LEVEL 4 FLOOR PLAN

1/8" = 1'-0"

LINK

LINK DESIGN GROUP LLC.

439 Kirkland Way
Kirkland, WA. US. 98033
+1.425.298.0080

602 Pengjiang RD, E461 ShangHai, China 200072
上海市静安区彭江路602号E座461室 邮编 200072
+86.21.6667.0228

Project No: Enter Client Supplied Number
XXXXXXXXXX

Client/Owner/Project Address

Owner
VIBRANT CITIES
606 Maynard Ave S
Suite 251
Seattle, WA 98104

Consultant

BLOSSOM APARTMENTS - COA SUBMITTAL

Issue Drawing Log

	09/04/20	INITIAL PRICING SET
	01/21/21	PERMIT SET SUBMITTAL
	03/05/21	COA SUBMITTAL

Professional Certification - I certify that these documents were prepared or approved by me, and that i am a duly licensed Architect under the laws of the state of Washington. License number _____. Expiration date _____

8628 REGISTERED ARCHITECT JENNY LI STATE OF WASHINGTON

SDCI APPROVAL STAMP

©LINK DESIGN GROUP LLC.
All rights reserved. No part of this document may be reproduced in any form or by any means without permission in writing from LINK DESIGN GROUP LLC.

PROJECT NUMBER	20-0108A
PROJECT MANAGER	JX
DRAWN BY	DS, MB

Sheet Identification

4TH FLOOR PLAN

A204

GENERAL NOTES - FLOOR PLAN

1. SEE DETAIL 1/A310 FOR ENLARGED LEVEL 2 CORRIDOR PLAN.
2. SEE DETAIL 1/A311 FOR ENLARGED LEVELS 3-7 CORRIDOR PLAN.
3. SEE DETAIL 1/A312 FOR ENLARGED LEVEL 8 CORRIDOR PLAN.
4. FLOOR PLAN DIMENSIONS ARE FROM FACE OF STUD (FOS) UNLESS NOTED OTHERWISE (UNO).
5. PARTY WALLS ARE CENTERED ON GRIDLINE, UNO.
6. SEE ENLARGED UNIT PLANS FOR WALL DIMENSIONS AND WALL TYPES.

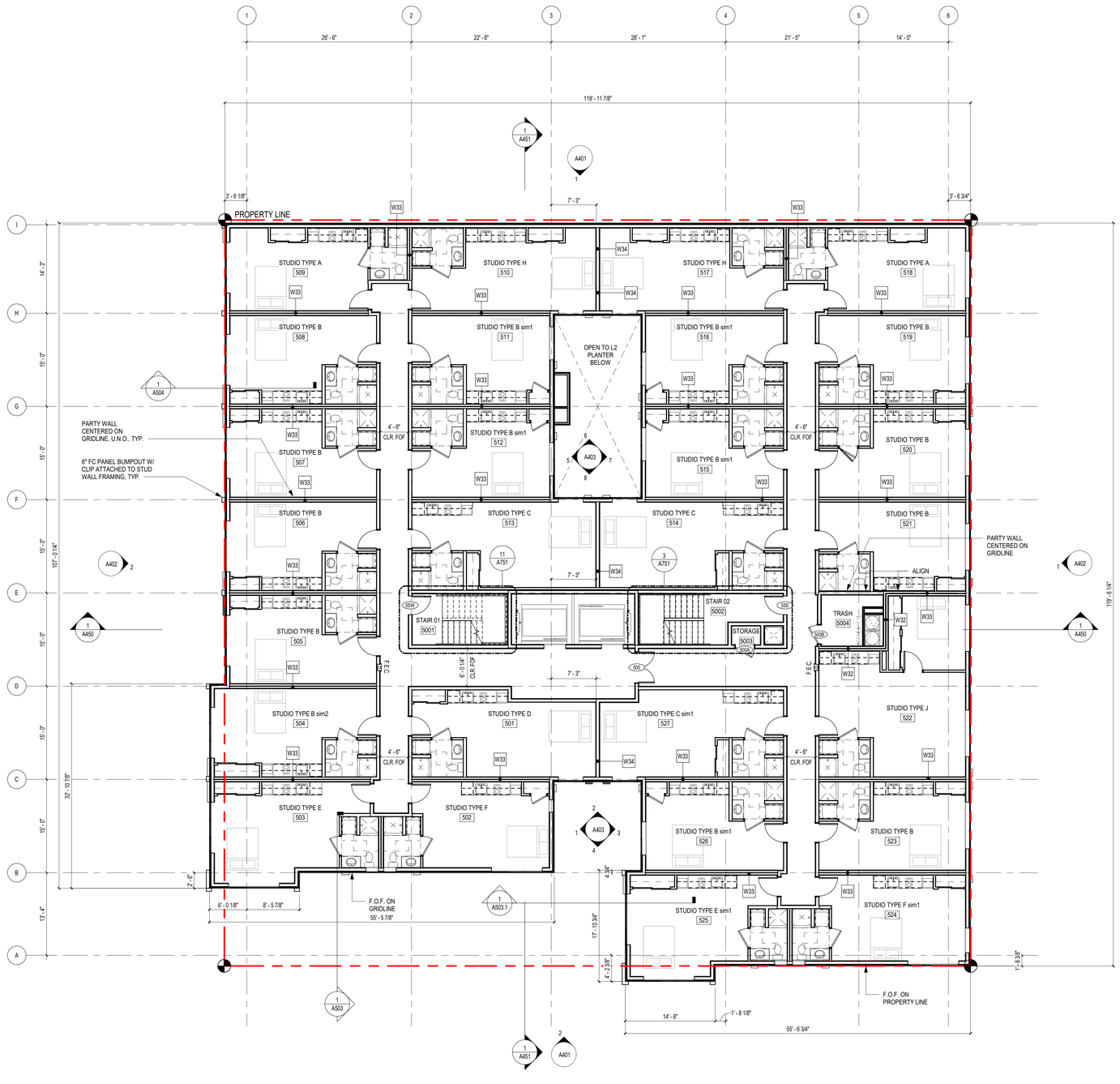

1 LEVEL 5 FLOOR PLAN

1/8" = 1'-0"

N

LINK

LINK DESIGN GROUP LLC.

439 Kirkland Way
Kirkland, WA. US. 98033
+1.425.298.0080

602 Pengjiang RD, E461 ShangHai, China 200072
上海市静安区彭江路602号E座461室 邮编 200072
+86.21.6667.0228

Project No: Enter Client Supplied Number
XXXXXXXXXX

Client/Owner/Project Address

Owner
VIBRANT CITIES
606 Maynard Ave S
Suite 251
Seattle, WA 98104

Consultant

BLOSSOM APARTMENTS - COA SUBMITTAL

Issue Drawing Log

	09/04/20	INITIAL PRICING SET
	01/21/21	PERMIT SET SUBMITTAL
	03/05/21	COA SUBMITTAL

Professional Certification - I certify that these documents were prepared or approved by me, and that i am a duly licensed Architect under the laws of the state of Washington. License number _____. Expiration date _____.

8628 REGISTERED ARCHITECT
Jenny Li
JENNY LI
STATE OF WASHINGTON

SDCI APPROVAL STAMP

©LINK DESIGN GROUP LLC.
All rights reserved. No part of this document may be reproduced in any form or by any means without permission in writing from LINK DESIGN GROUP LLC.

PROJECT NUMBER	20-0108A
PROJECT MANAGER	JX
DRAWN BY	DS, MB

Sheet Identification

5TH FLOOR PLAN

A205

GENERAL NOTES - FLOOR PLAN

1. SEE DETAIL 1/A310 FOR ENLARGED LEVEL 2 CORRIDOR PLAN.
2. SEE DETAIL 1/A311 FOR ENLARGED LEVELS 3-7 CORRIDOR PLAN.
3. SEE DETAIL 1/A312 FOR ENLARGED LEVEL 8 CORRIDOR PLAN.
4. FLOOR PLAN DIMENSIONS ARE FROM FACE OF STUD (FOS) UNLESS NOTED OTHERWISE (UNO).
5. PARTY WALLS ARE CENTERED ON GRIDLINE, UNO.
6. SEE ENLARGED UNIT PLANS FOR WALL DIMENSIONS AND WALL TYPES.

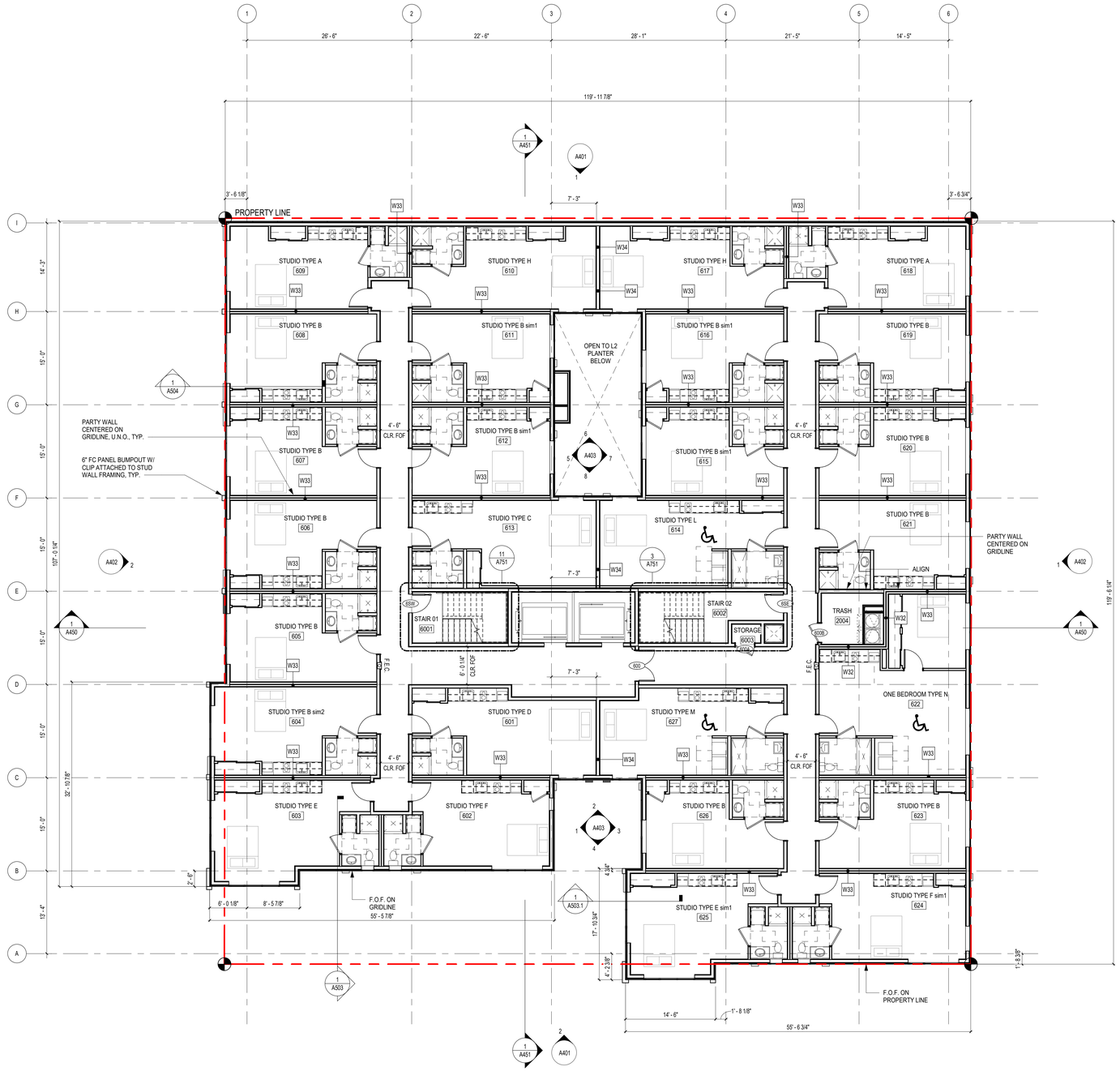

1 LEVEL 6 FLOOR PLAN

1/8" = 1'-0"

LINK

LINK DESIGN GROUP LLC.

439 Kirkland Way
Kirkland, WA. US. 98033
+1.425.298.0080

602 Pengjiang RD, E461 ShangHai, China 200072
上海市静安区彭江路602号E座461室 邮编 200072
+86.21.6667.0228

Project No: Enter Client Supplied Number
XXXXXXXXXX

Client/Owner/Project Address

Owner
VIBRANT CITIES
606 Maynard Ave S
Suite 251
Seattle, WA 98104

Consultant

BLOSSOM APARTMENTS - COA SUBMITTAL

Issue Drawing Log

	09/04/20	INITIAL PRICING SET
	01/21/21	PERMIT SET SUBMITTAL
	03/05/21	COA SUBMITTAL

Professional Certification - I certify that these documents were prepared or approved by me, and that i am a duly licensed Architect under the laws of the state of Washington. License number _____. Expiration date _____.

8628 REGISTERED ARCHITECT
Jenny Li
JENNY LI
STATE OF WASHINGTON

SDCI APPROVAL STAMP

©LINK DESIGN GROUP LLC.
All rights reserved. No part of this document may be reproduced in any form or by any means without permission in writing from LINK DESIGN GROUP LLC.

PROJECT NUMBER	20-0108A
PROJECT MANAGER	JX
DRAWN BY	DS, MB

Sheet Identification

6TH FLOOR PLAN

A206

GENERAL NOTES - FLOOR PLAN

1. SEE DETAIL 1/A310 FOR ENLARGED LEVEL 2 CORRIDOR PLAN.
2. SEE DETAIL 1/A311 FOR ENLARGED LEVELS 3-7 CORRIDOR PLAN.
3. SEE DETAIL 1/A312 FOR ENLARGED LEVEL 8 CORRIDOR PLAN.
4. FLOOR PLAN DIMENSIONS ARE FROM FACE OF STUD (FOS) UNLESS NOTED OTHERWISE (UNO).
5. PARTY WALLS ARE CENTERED ON GRIDLINE, UNO.
6. SEE ENLARGED UNIT PLANS FOR WALL DIMENSIONS AND WALL TYPES.

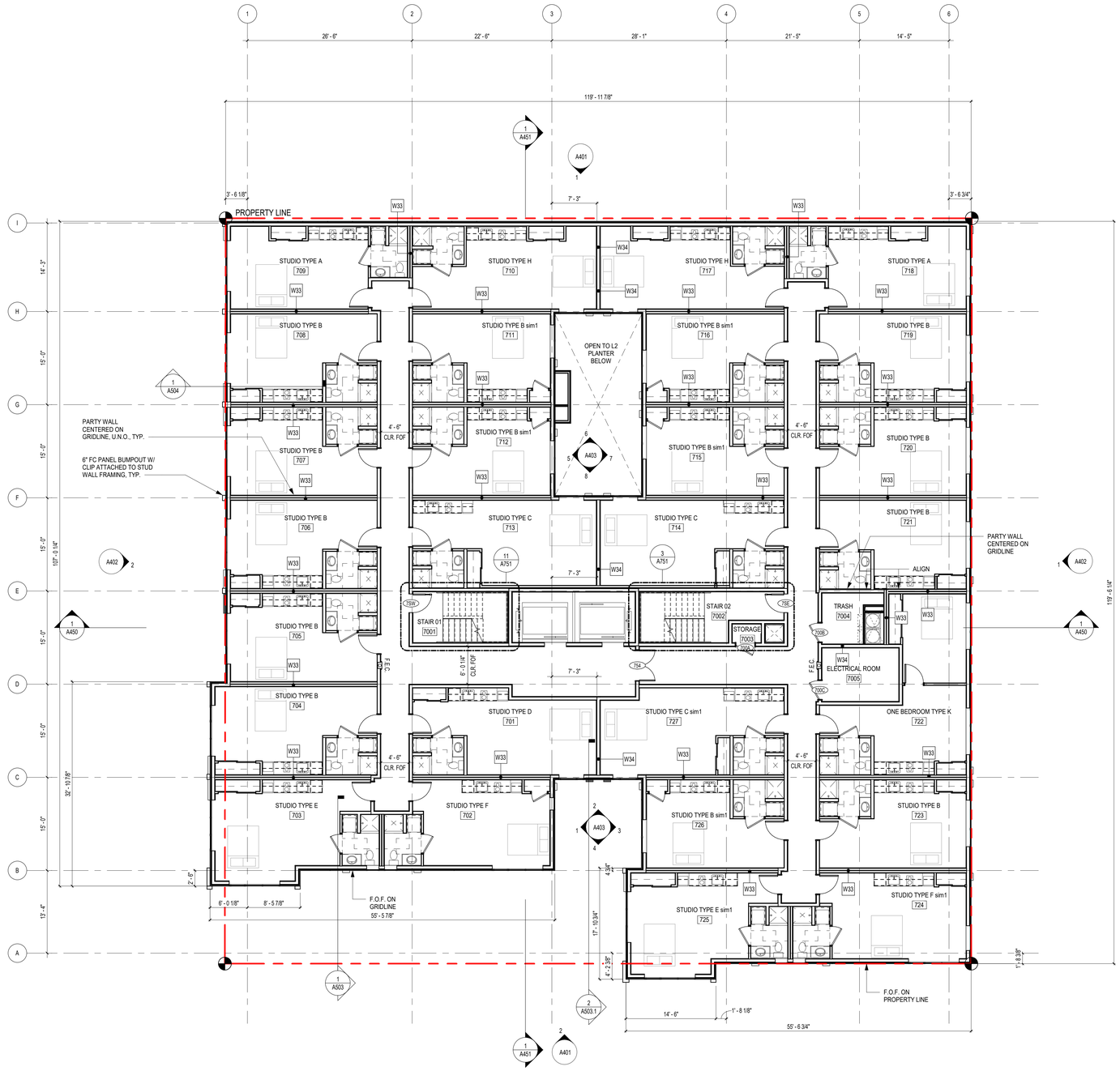

1 LEVEL 7 FLOOR PLAN

1/8" = 1'-0"

LINK
LINK DESIGN GROUP LLC.
439 Kirkland Way
Kirkland, WA. US. 98033
+1.425.298.0080

602 Pengjiang RD, E461 ShangHai, China 200072
上海市静安区彭江路602号E座461室 邮编 200072
+86.21.6667.0228

Project No: Enter Client Supplied Number
XXXXXXXXXX

Client/Owner/Project Address

Owner
VIBRANT CITIES
606 Maynard Ave S
Suite 251
Seattle, WA 98104

Consultant

BLOSSOM APARTMENTS - COA SUBMITTAL

Issue Drawing Log

	09/04/20	INITIAL PRICING SET
	01/21/21	PERMIT SET SUBMITTAL
	03/05/21	COA SUBMITTAL

Professional Certification - I certify that these documents were prepared or approved by me, and that i am a duly licensed Architect under the laws of the state of Washington. License number _____. Expiration date _____.

8628 REGISTERED ARCHITECT
Jenny Li
JENNY LI
STATE OF WASHINGTON

SDCI APPROVAL STAMP

©LINK DESIGN GROUP LLC.
All rights reserved. No part of this document may be reproduced in any form or by any means without permission in writing from LINK DESIGN GROUP LLC.

PROJECT NUMBER	20-0108A
PROJECT MANAGER	JX
DRAWN BY	DS, MB

Sheet Identification

7TH FLOOR PLAN

A207

GENERAL NOTES - FLOOR PLAN

1. SEE DETAIL 1/A310 FOR ENLARGED LEVEL 2 CORRIDOR PLAN.
2. SEE DETAIL 1/A311 FOR ENLARGED LEVELS 3-7 CORRIDOR PLAN.
3. SEE DETAIL 1/A312 FOR ENLARGED LEVEL 8 CORRIDOR PLAN.
4. FLOOR PLAN DIMENSIONS ARE FROM FACE OF STUD (FOS) UNLESS NOTED OTHERWISE (UNO).
5. PARTY WALLS ARE CENTERED ON GRIDLINE, UNO.
6. SEE ENLARGED UNIT PLANS FOR WALL DIMENSIONS AND WALL TYPES.

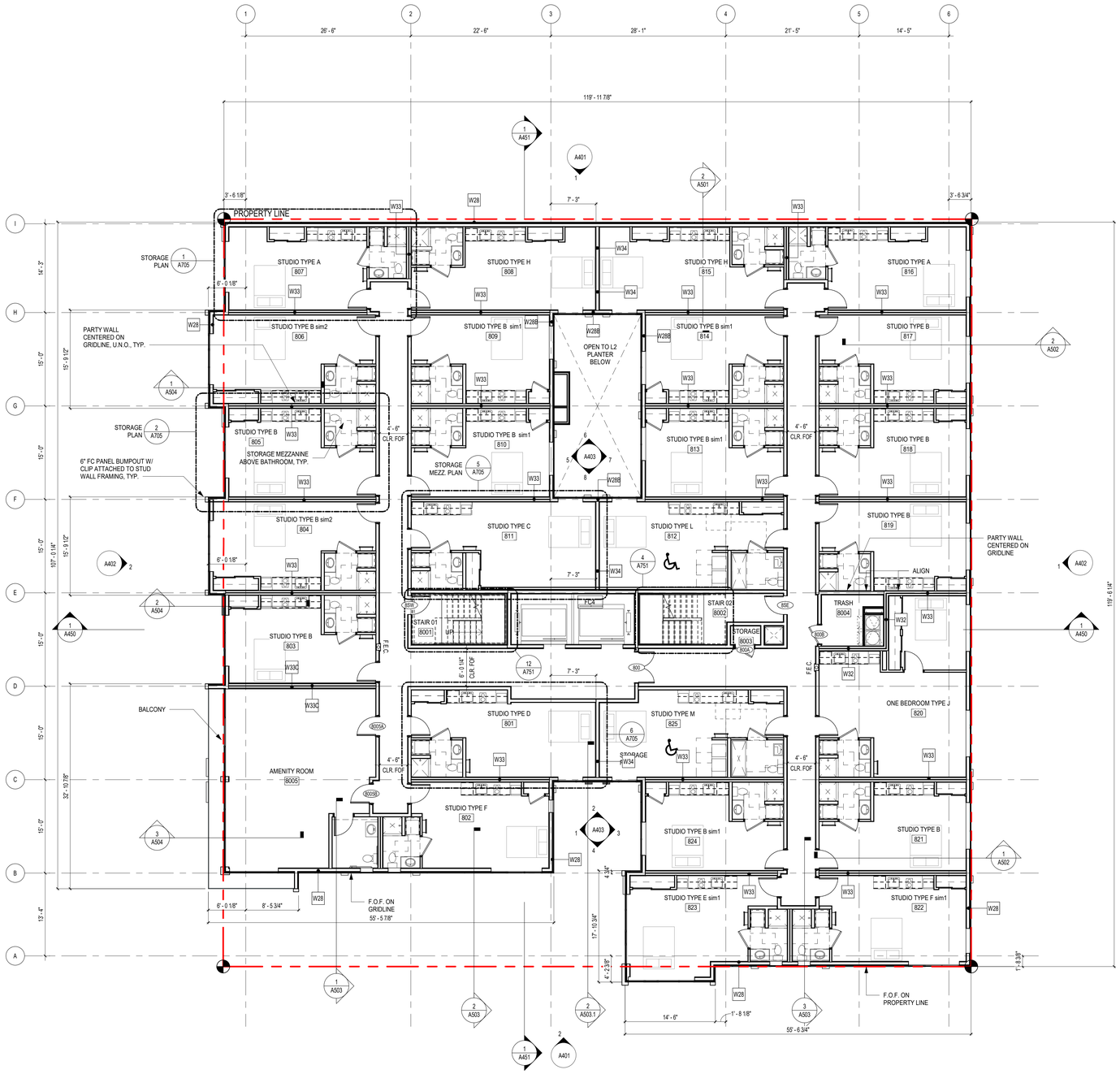

1 LEVEL 8 FLOOR PLAN

1/8" = 1'-0"

LINK

LINK DESIGN GROUP LLC.

439 Kirkland Way
Kirkland, WA. US. 98033
+1.425.298.0080

602 Pengjiang RD, E461 ShangHai, China 200072
上海市静安区彭江路602号E座461室 邮编 200072
+86.21.6667.0228

Project No: Enter Client Supplied Number
XXXXXXXXXX

Client/Owner/Project Address

Owner
VIBRANT CITIES
606 Maynard Ave S
Suite 251
Seattle, WA 98104

Consultant

BLOSSOM APARTMENTS - COA SUBMITTAL

Issue Drawing Log

	09/04/20	INITIAL PRICING SET
	01/21/21	PERMIT SET SUBMITTAL
	03/05/21	COA SUBMITTAL

Professional Certification - I certify that these documents were prepared or approved by me, and that i am a duly licensed Architect under the laws of the state of Washington, License number _____, Expiration date _____.

8628 REGISTERED ARCHITECT
Jenny Li
JENNY LI
STATE OF WASHINGTON

SDCI APPROVAL STAMP

©LINK DESIGN GROUP LLC.
All rights reserved. No part of this document may be reproduced in any form or by any means without permission in writing from LINK DESIGN GROUP LLC.

PROJECT NUMBER	20-0108A
PROJECT MANAGER	JX
DRAWN BY	DS, MB

Sheet Identification

8TH FLOOR PLAN

A208

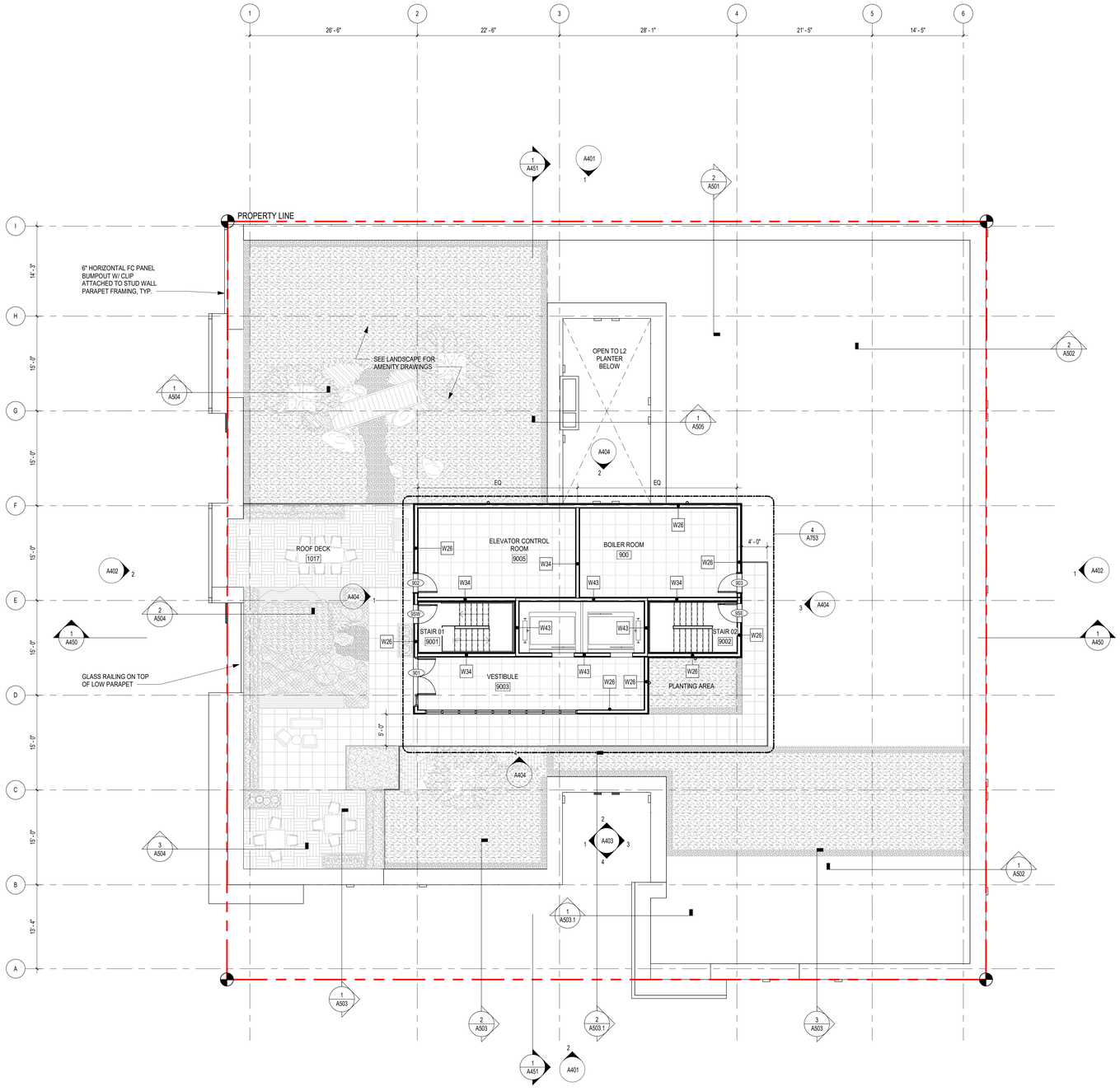

1 ROOF
1/8" = 1'-0"

LINK
LINK DESIGN GROUP LLC.
439 Kirkland Way
Kirkland, WA. US. 98033
+1.425.298.0080
602 Pengjiang RD, E461 ShangHai, China 200072
上海市静安区彭江路602号E座461室 邮编 200072
+86.21.6667.0228

Project No: Enter Client Supplied Number
XXXXXXXXXX

Client/Owner/Project Address

Owner
VIBRANT CITIES
606 Maynard Ave S
Suite 251
Seattle, WA 98104

Consultant

BLOSSOM APARTMENTS - COA SUBMITTAL

Issue Drawing Log

	09/04/20	INITIAL PRICING SET
	01/21/21	PERMIT SET SUBMITTAL
	03/05/21	COA SUBMITTAL

Professional Certification - I certify that these documents were prepared or approved by me, and that i am a duly licensed Architect under the laws of the state of Washington, License number _____, Expiration date _____.

8628 REGISTERED ARCHITECT
JENNY LI
STATE OF WASHINGTON

SDCI APPROVAL STAMP

©LINK DESIGN GROUP LLC.
All rights reserved. No part of this document may be reproduced in any form or by any means without permission in writing from LINK DESIGN GROUP LLC.

PROJECT NUMBER	20-0108A
PROJECT MANAGER	JX
DRAWN BY	DS, MB

Sheet Identification

ROOF PLAN

A210

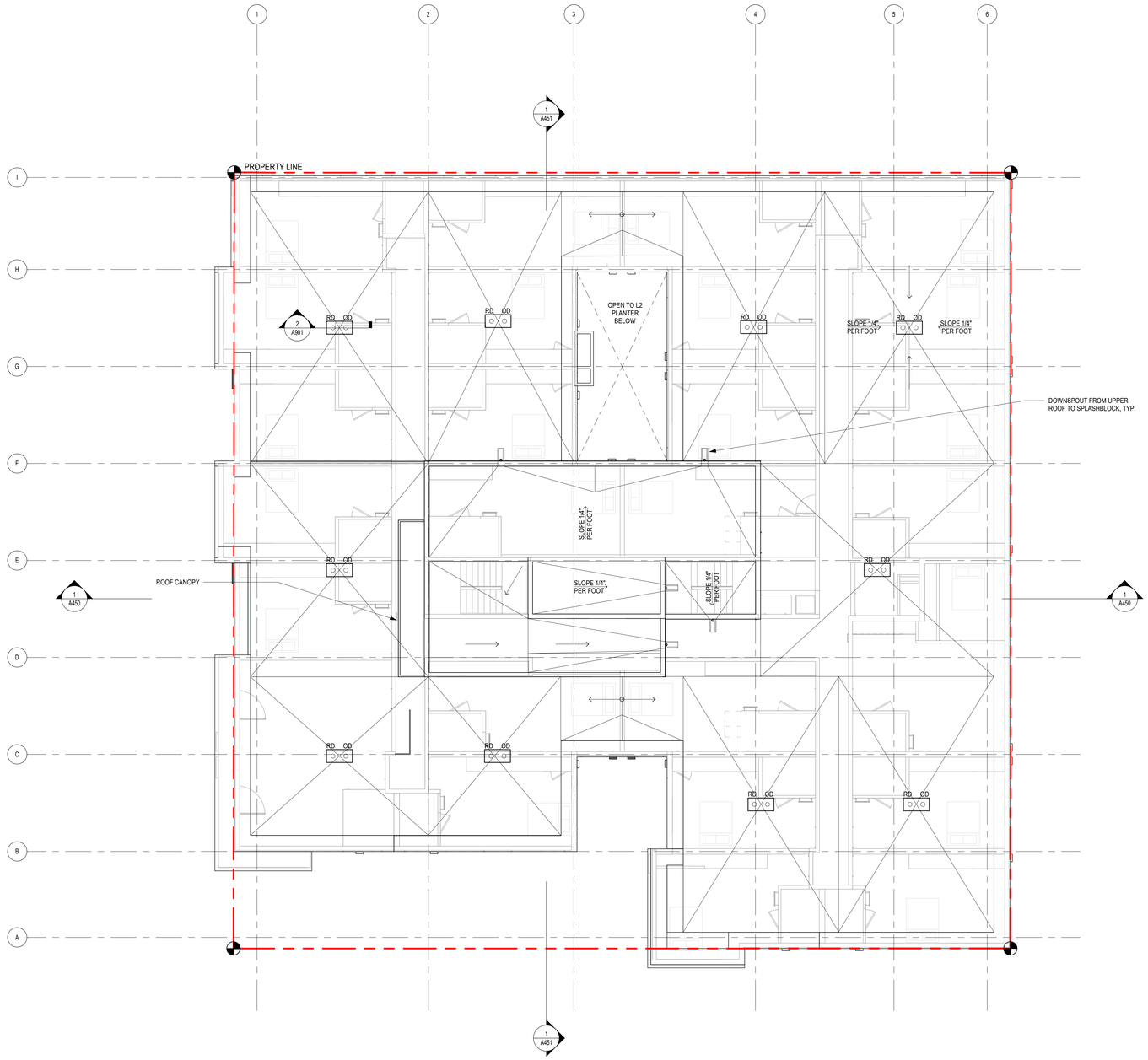

1 ROOF DRAIN PLAN
1/8" = 1'-0"

LINK
LINK DESIGN GROUP LLC.
439 Kirkland Way
Kirkland, WA. US. 98033
+1.425.298.0080

602 Pengjiang RD, E461 ShangHai, China 200072
上海市静安区彭江路602号E座461室 邮编 200072
+86.21.6667.0228

Project No: Enter Client Supplied Number
XXXXXXXXXX

Client/Owner/Project Address

Owner
VIBRANT CITIES
606 Maynard Ave S
Suite 251
Seattle, WA 98104

Consultant

BLOSSOM APARTMENTS - COA SUBMITTAL

Issue Drawing Log

	09/04/20	INITIAL PRICING SET
	01/21/21	PERMIT SET SUBMITTAL
	03/05/21	COA SUBMITTAL

Professional Certification - I certify that these documents were prepared or approved by me, and that i am a duly licensed Architect under the laws of the state of Washington. License number _____. Expiration date _____

8628 REGISTERED ARCHITECT JENNY LI STATE OF WASHINGTON

SDCI APPROVAL STAMP

©LINK DESIGN GROUP LLC.
All rights reserved. No part of this document may be reproduced in any form or by any means without permission in writing from LINK DESIGN GROUP LLC.

PROJECT NUMBER	20-0108A
PROJECT MANAGER	JX
DRAWN BY	DS, MB

Sheet Identification

ROOF DRAIN PLAN

A211

1 BASEMENT

1/8" = 1'-0"

LEGEND

1.	SURFACE MOUNTED LIGHT, LT-3	
2.	DIRECTIONAL ACCENT LIGHT, LT-8	
3.	COVE LIGHT, LT-9	
4.	TYPICAL SHOWER LIGHT, LT-4	
5.	UNIT BEDROOM LIGHT, LT-6	
6.	BATHROOM FAN	
7.	SMOKE DETECTOR	SD
8.	RANGE EXHAUSE VENT	
9.	PARKING VESTIBULE LIGHT, SURFACE MOUNTED, LT-27	
10.	PARKING VESTIBULE LIGHT, RECESSED, LT-26	
11.	LED COVE LIGHT, LT-9	
12.	LED RECESSED LIGHT, LT-15	
13.	PENDANT LIGHT, LT-37	
14.	SQUARE LED DOWN LIGHT, LT-7	
15.	6" ROUND LED RECESSED DOWN LIGHT, LT-25	
16.	6" ROUND LED SURFACE MOUNTED, DOWN LIGHT, LT-24	
17.	STICKPIN BATT INSULATION AT P1	
18.	BATT INSULATION AND GWB CEILING	
19.	SEMI-FLUSH MOUNT LIGHT, LT-5	
20.	LANDSCAPE STEP/WALL LIGHT, LT-29	
21.	SURFACE MOUNTED, LTX11	

CEILING NOTES

1. WHOLE HOUSE FANS TO BE LOCATED IN THE BATHROOMS PER MEP. W/D CLOSETS NOT IN BATHROOMS WILL BE PROVIDED W/ SEPARATED EXHAUST FANS.
2. DOUBLE-DASH LINES IN UNITS INDICATE DUCTWORK THROUGH FLOOR JOISTS.
3. BATHROOM FAN SHALL CENTER ON TOILET UNLESS OTHERWISE NOTED.
4. SEE LANDSCAPE DRAWINGS FOR PLAZA, LIGHTWELL, AND ROOF TOP LIGHTING.
5. GARAGE LIGHTING LAYOUT AND FIXTURES TO BE REVIEWED / CONFIRMED BY ELECTRICAL.
6. RESIDENTIAL LOBBY LIGHTING PER INTERIOR DRAWINGS.
7. RETAIL LIGHTING UNDER RETAIL TENANT IMPROVEMENTS.

LINK

LINK DESIGN GROUP LLC.

439 Kirkland Way
Kirkland, WA. US. 98033
+1.425.298.0080

602 Pengjiang RD, E461 ShangHai, China 200072
上海市静安区彭江路602号E座461室 邮编 200072
+86.21.6667.0228

Project No: Enter Client Supplied Number
XXXXXXXXXX

Client/Owner/Project Address

Owner
VIBRANT CITIES
606 Maynard Ave S
Suite 251
Seattle, WA 98104

Consultant

BLOSSOM APARTMENTS - COA SUBMITTAL

Issue Drawing Log

	09/04/20	INITIAL PRICING SET
	01/21/21	PERMIT SET SUBMITTAL
	03/05/21	COA SUBMITTAL

Professional Certification - I certify that these documents were prepared or approved by me, and that I am a duly licensed Architect under the laws of the state of Washington, License number _____, Expiration date _____.

8628 REGISTERED ARCHITECT
JENNY LI
STATE OF WASHINGTON

SDCI APPROVAL STAMP

©LINK DESIGN GROUP LLC.
All rights reserved. No part of this document may be reproduced in any form or by any means without permission in writing from LINK DESIGN GROUP LLC.

PROJECT NUMBER	20-0108A
PROJECT MANAGER	JX
DRAWN BY	DS, MB

Sheet Identification

BASEMENT RCP

A300

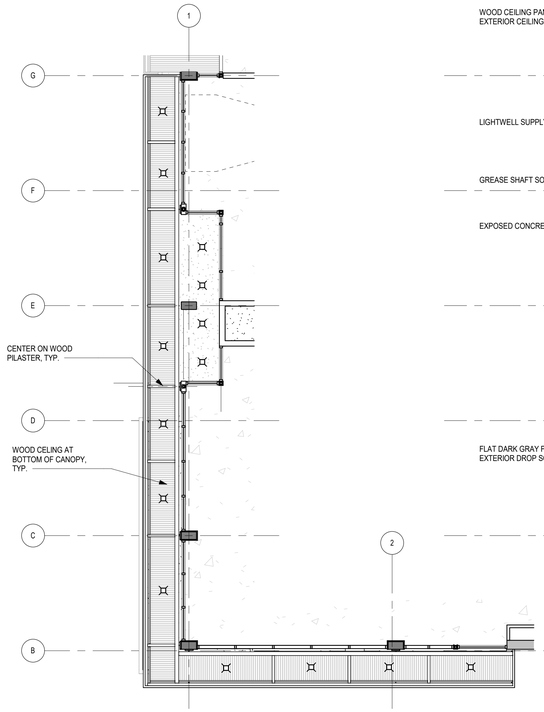

2 LEVEL 1 CANOPY - WEST
1/8" = 1'-0"

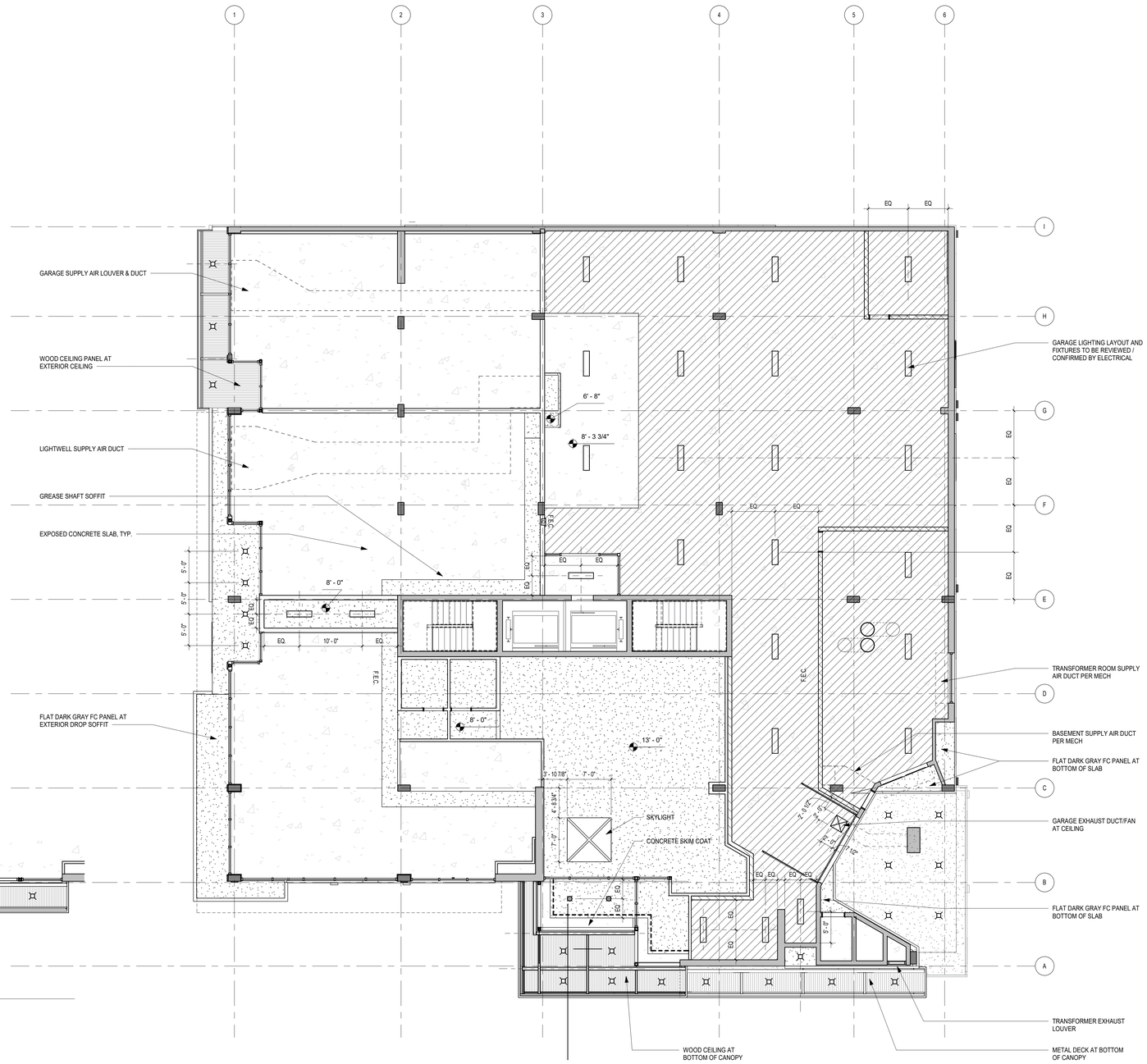

1 LEVEL 1 RCP
1/8" = 1'-0"

LEGEND

1.	SURFACE MOUNTED LIGHT, LT-3	
2.	DIRECTIONAL ACCENT LIGHT, LT-8	
3.	COVE LIGHT, LT-9	
4.	TYPICAL SHOWER LIGHT, LT-4	
5.	UNIT BEDROOM LIGHT, LT-6	
6.	BATHROOM FAN	
7.	SMOKE DETECTOR	SD CO
8.	RANGE EXHAUSE VENT	
9.	PARKING VESTIBULE LIGHT, SURFACE MOUNTED, LT-27	
10.	PARKING VESTIBULE LIGHT, RECESSED, LT-26	
11.	LED COVE LIGHT, LT-9	
12.	LED RECESSED LIGHT, LT-15	
13.	PENDANT LIGHT, LT-37	
14.	SQUARE LED DOWN LIGHT, LT-7	
15.	6" ROUND LED RECESSED DOWN LIGHT, LT-25	
16.	6" ROUND LED SURFACE MOUNTED, DOWN LIGHT, LT-24	
17.	STICKPIN BATT INSULATION AT P1	
18.	BATT INSULATION AND GWB CEILING	
19.	SEMI-FLUSH MOUNT LIGHT, LT-5	
20.	LANDSCAPE STEP/WALL LIGHT, LT-29	
21.	SURFACE MOUNTED, LTX11	

CEILING NOTES

1. WHOLE HOUSE FANS TO BE LOCATED IN THE BATHROOMS PER MEP. W/D CLOSETS NOT IN BATHROOMS WILL BE PROVIDED W/ SEPARATED EXHAUST FANS.
2. DOUBLE-DASH LINES IN UNITS INDICATE DUCTWORK THROUGH FLOOR JOISTS.
3. BATHROOM FAN SHALL CENTER ON TOILET UNLESS OTHERWISE NOTED.
4. SEE LANDSCAPE DRAWINGS FOR PLAZA, LIGHTWELL, AND ROOF TOP LIGHTING.
5. GARAGE LIGHTING LAYOUT AND FIXTURES TO BE REVIEWED / CONFIRMED BY ELECTRICAL.
6. RESIDENTIAL LOBBY LIGHTING PER INTERIOR DRAWINGS.
7. RETAIL LIGHTING UNDER RETAIL TENANT IMPROVEMENTS.

LINK
LINK DESIGN GROUP LLC.
439 Kirkland Way
Kirkland, WA. US. 98033
+1.425.298.0080

602 Pengjiang RD, E461 ShangHai, China 200072
上海市静安区彭江路602号E座461室 邮编 200072
+86.21.6667.0228

Project No: Enter Client Supplied Number
XXXXXXXXXX

Client/Owner/Project Address

Owner
VIBRANT CITIES
606 Maynard Ave S
Suite 251
Seattle, WA 98104

Consultant

BLOSSOM APARTMENTS - COA SUBMITTAL

Issue Drawing Log

	09/04/20	INITIAL PRICING SET
	01/21/21	PERMIT SET SUBMITTAL
	03/05/21	COA SUBMITTAL

Professional Certification - I certify that these documents were prepared or approved by me, and that I am a duly licensed Architect under the laws of the state of Washington, License number _____, Expiration date _____.

8628 REGISTERED ARCHITECT
Jenny Li
JENNY LI
STATE OF WASHINGTON

SDCI APPROVAL STAMP

©LINK DESIGN GROUP LLC.
All rights reserved. No part of this document may be reproduced in any form or by any means without permission in writing from LINK DESIGN GROUP LLC.

PROJECT NUMBER	20-0108A
PROJECT MANAGER	JX
DRAWN BY	DS, MB

Sheet Identification

1ST FLOOR RCP

A301

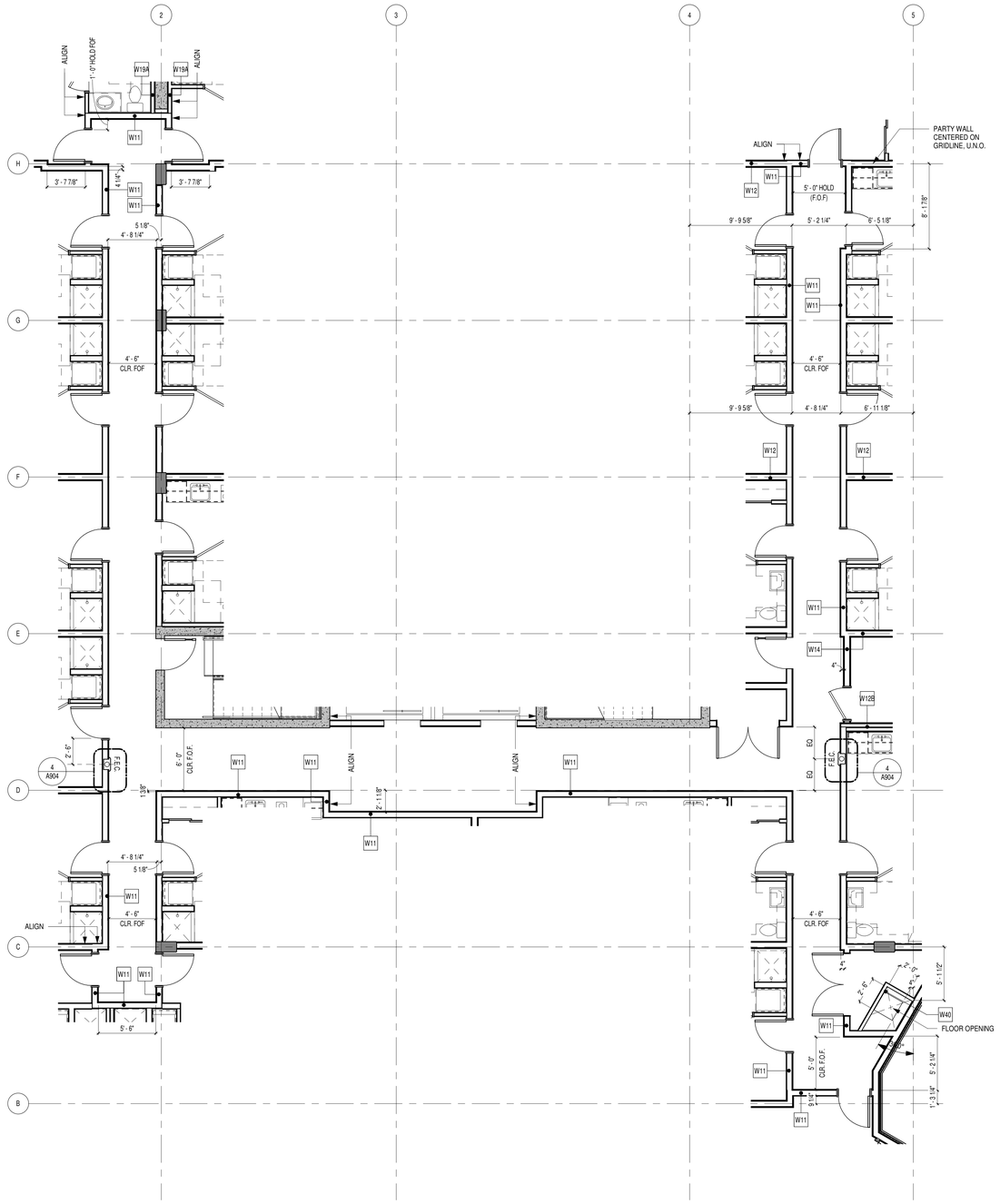

2 LEVEL 2 CORRIDOR PLAN

3/16" = 1'-0"

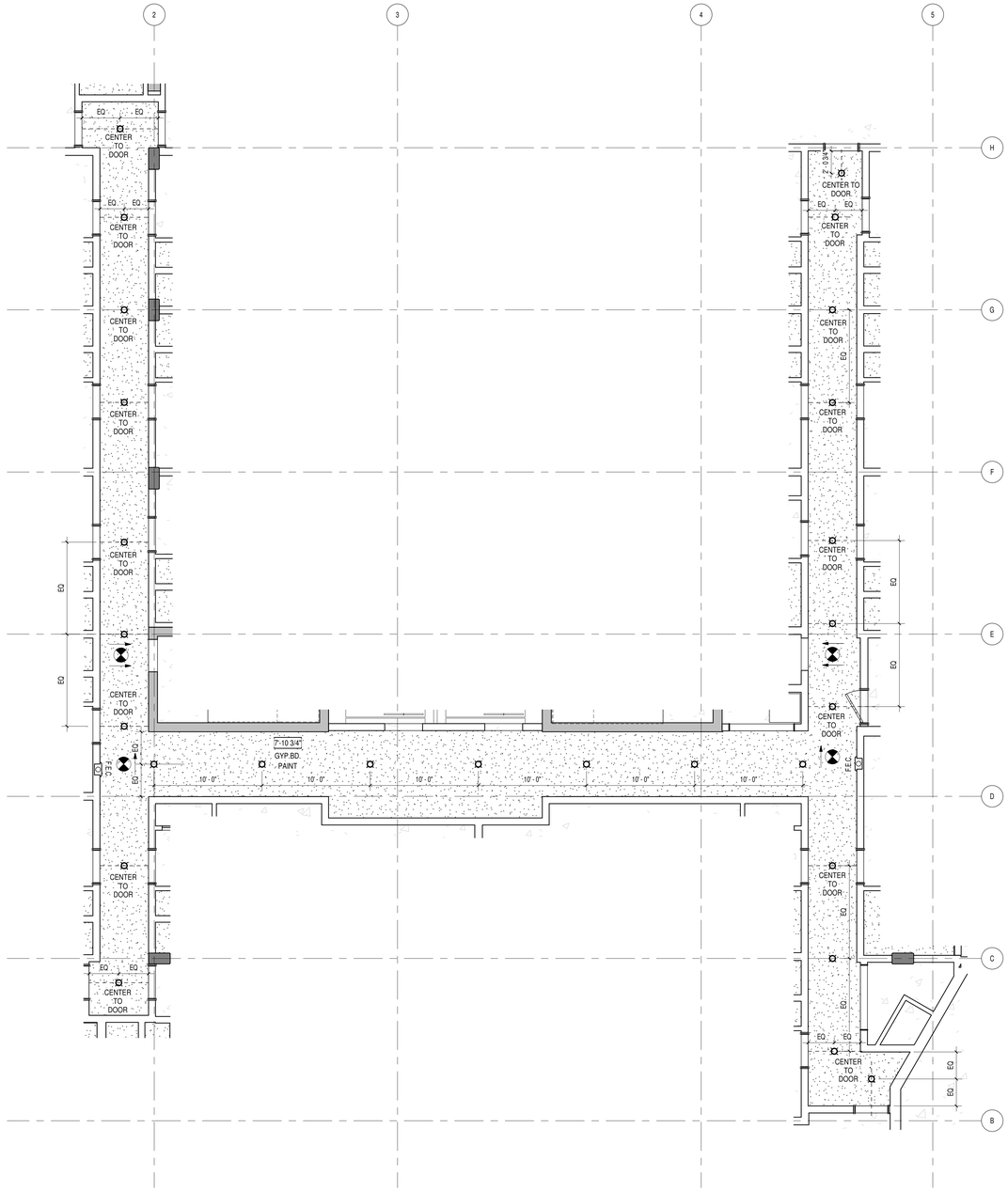

1 LEVEL 2 CORRIDOR RCP

3/16" = 1'-0"

LINK

LINK DESIGN GROUP LLC.

439 Kirkland Way
Kirkland, WA. US. 98033
+1.425.298.0080

602 Pengjiang RD, E461 ShangHai, China 200072
上海市静安区彭江路602号E座461室 邮编 200072
+86.21.6667.0228

Project No: Enter Client Supplied Number
XXXXXXXXXX

Client/Owner/Project Address

Owner

VIBRANT CITIES
606 Maynard Ave S
Suite 251
Seattle, WA 98104

Consultant

BLOSSOM APARTMENTS - COA SUBMITTAL

-

Issue Drawing Log

	09/04/20	INITIAL PRICING SET
	01/21/21	PERMIT SET SUBMITTAL
	03/05/21	COA SUBMITTAL

Professional Certification - I certify that these documents were prepared or approved by me, and that I am a duly licensed Architect under the laws of the state of Washington. License number _____. Expiration date _____.

8628 REGISTERED ARCHITECT
Jenny Li
JENNY LI
STATE OF WASHINGTON

SDCI APPROVAL STAMP

©LINK DESIGN GROUP LLC.
All rights reserved. No part of this document may be reproduced in any form or by any means without permission in writing from LINK DESIGN GROUP LLC.

PROJECT NUMBER	20-0108A
PROJECT MANAGER	JX
DRAWN BY	DS, MB

Sheet Identification

ENLARGED CORRIDOR PLAN & RCP - LEVEL 2

A310

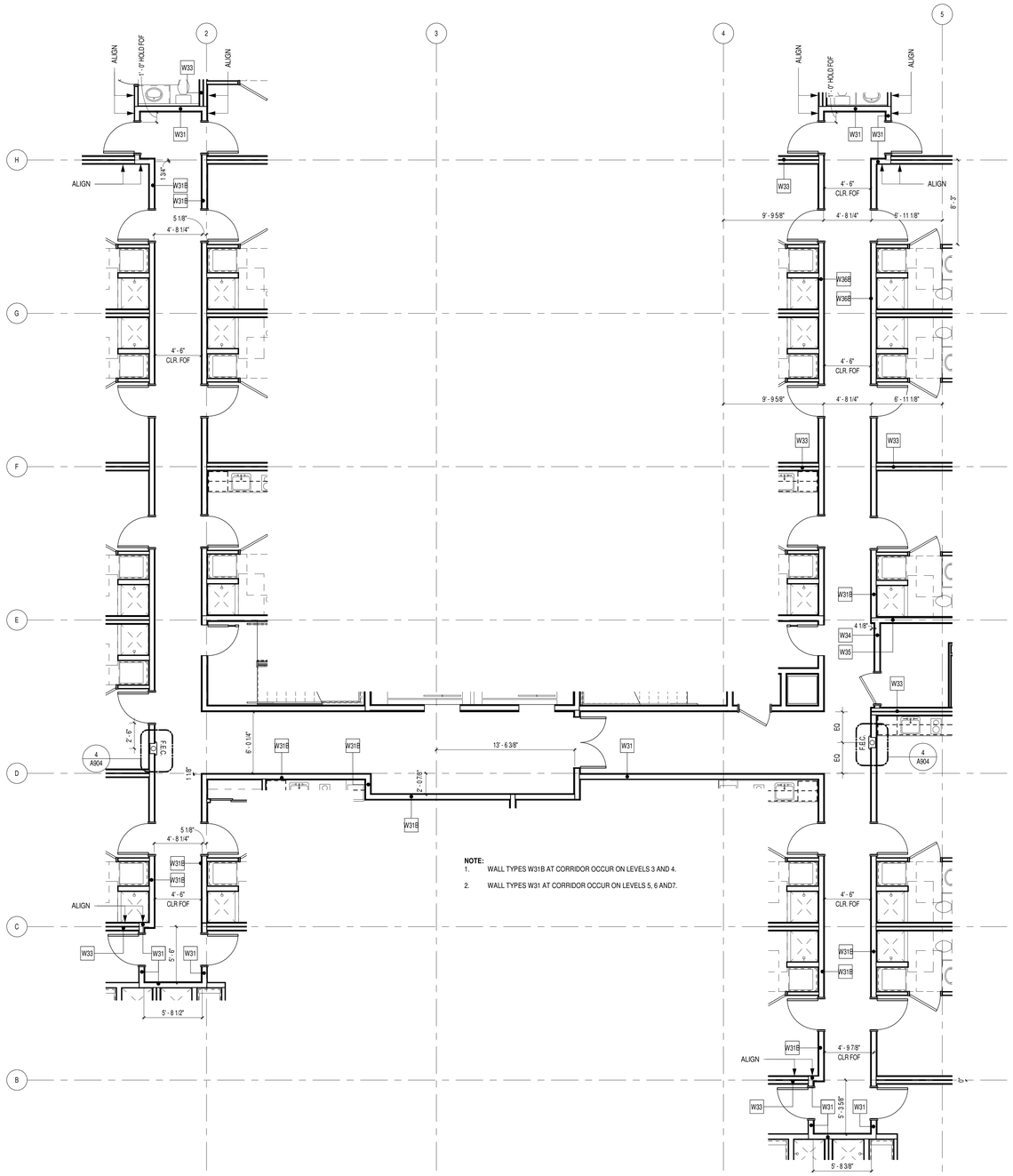

NOTE:

1. WALL TYPES W31B AT CORRIDOR OCCUR ON LEVELS 3 AND 4.
2. WALL TYPES W31 AT CORRIDOR OCCUR ON LEVELS 5, 6 AND7.

2 LEVEL 3-7 CORRDOR PLAN

3/16" = 1'-0"

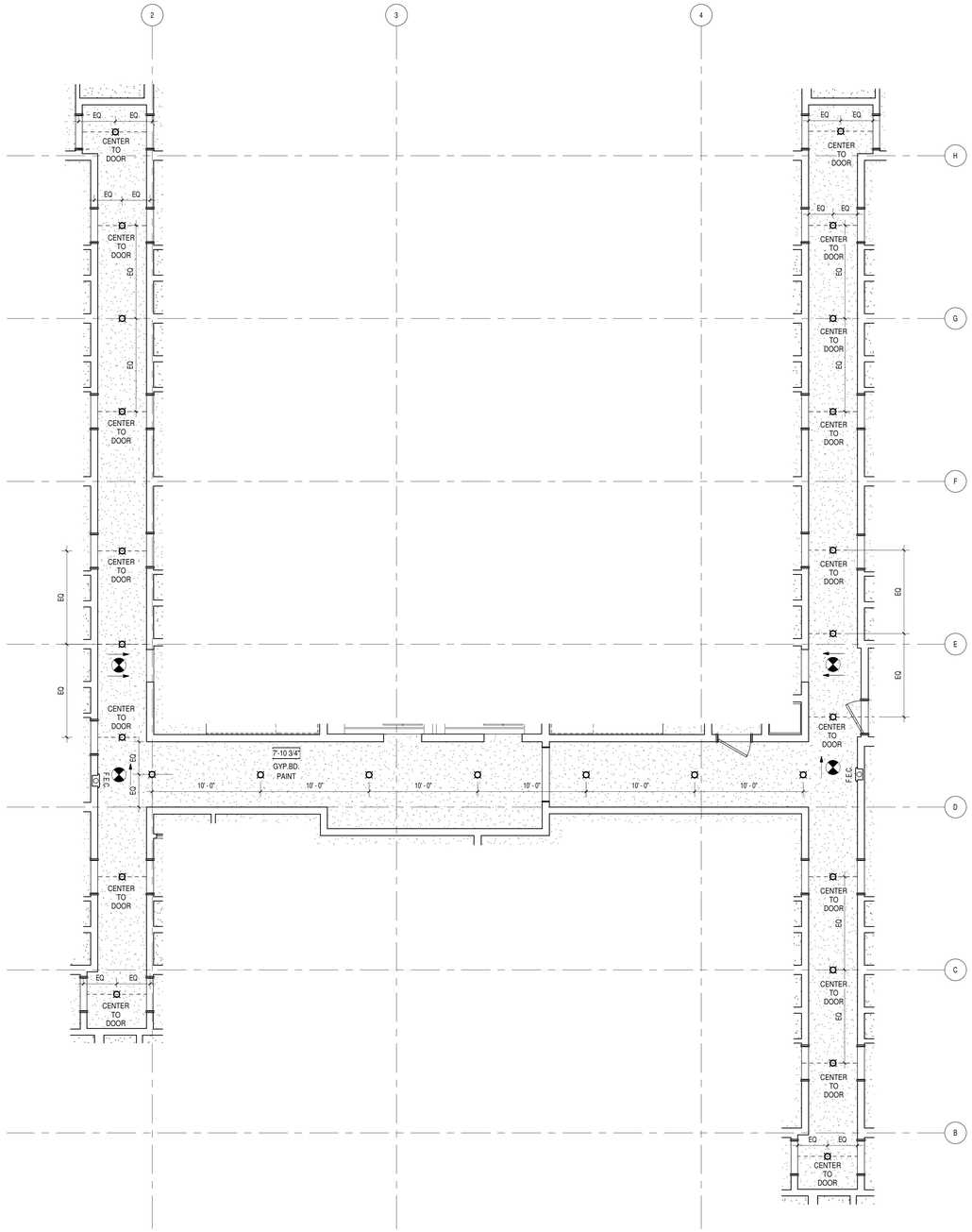

1 LEVEL 3-7 CORRIDOR RCP

3/16" = 1'-0"

LINK

LINK DESIGN GROUP LLC.

439 Kirkland Way
Kirkland, WA. US. 98033
+1.425.298.0080

602 Pengjiang RD, E461 ShangHai, China 200072
上海市静安区彭江路602号E座461室 邮编 200072
+86.21.6667.0228

Project No: Enter Client Supplied Number
XXXXXXXXXX

Client/Owner/Project Address

Owner
VIBRANT CITIES
606 Maynard Ave S
Suite 251
Seattle, WA 98104

Consultant

BLOSSOM APARTMENTS - COA SUBMITTAL

-

Issue Drawing Log

	09/04/20	INITIAL PRICING SET
	01/21/21	PERMIT SET SUBMITTAL
	03/05/21	COA SUBMITTAL

Professional Certification - I certify that these documents were prepared or approved by me, and that I am a duly licensed Architect under the laws of the state of Washington. License number _____. Expiration date _____.

8628 REGISTERED ARCHITECT
Jenny Li
JENNY LI
STATE OF WASHINGTON

SDCI APPROVAL STAMP

©LINK DESIGN GROUP LLC.
All rights reserved. No part of this document may be reproduced in any form or by any means without permission in writing from LINK DESIGN GROUP LLC.

PROJECT NUMBER	20-0108A
PROJECT MANAGER	JX
DRAWN BY	DS, MB

Sheet Identification

ENLARGED CORRIDOR PLAN & RCP - LEVELS 3-7

A311

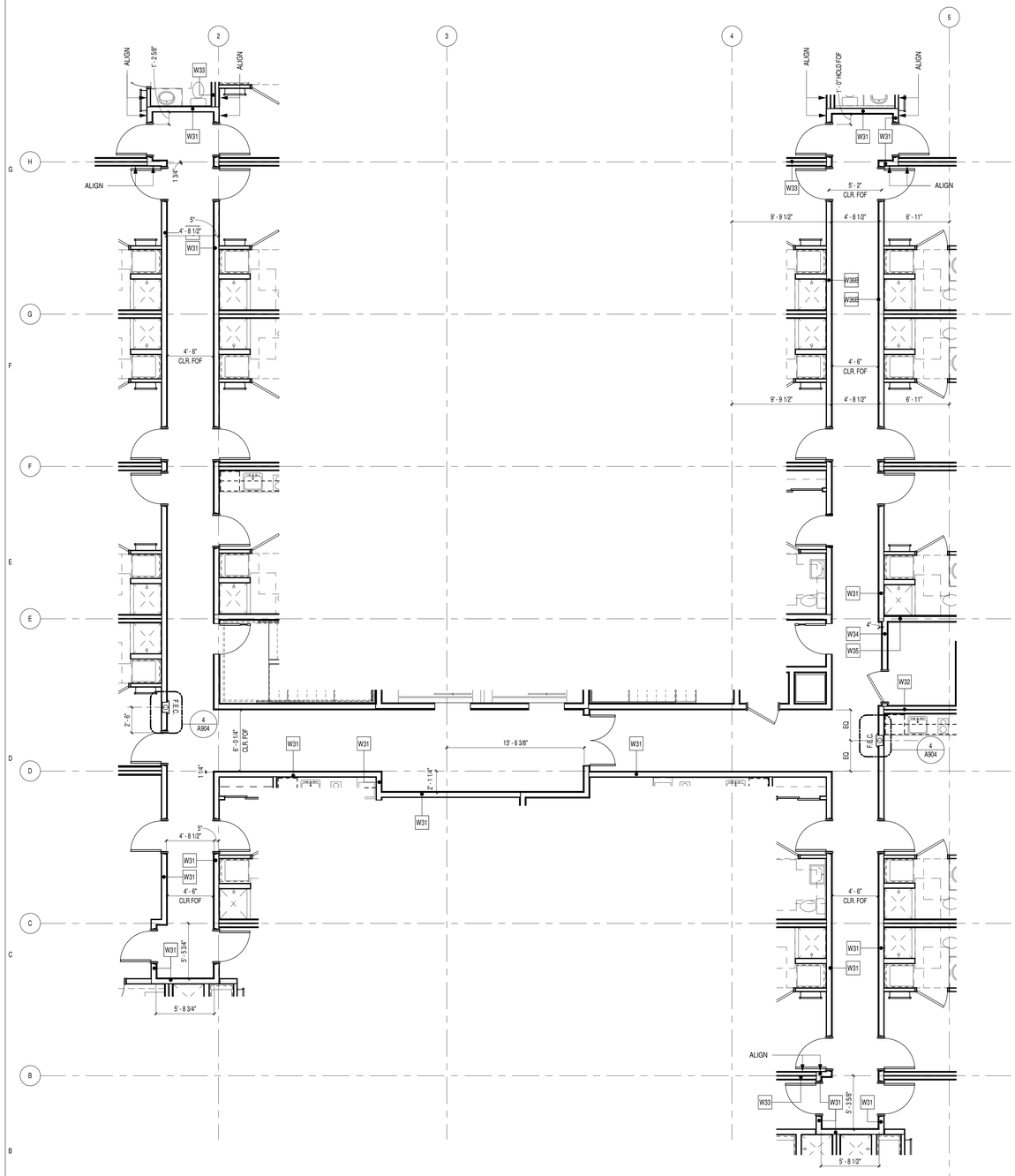

2 LEVEL 8 CORRIDOR PLAN

3/16" = 1'-0"

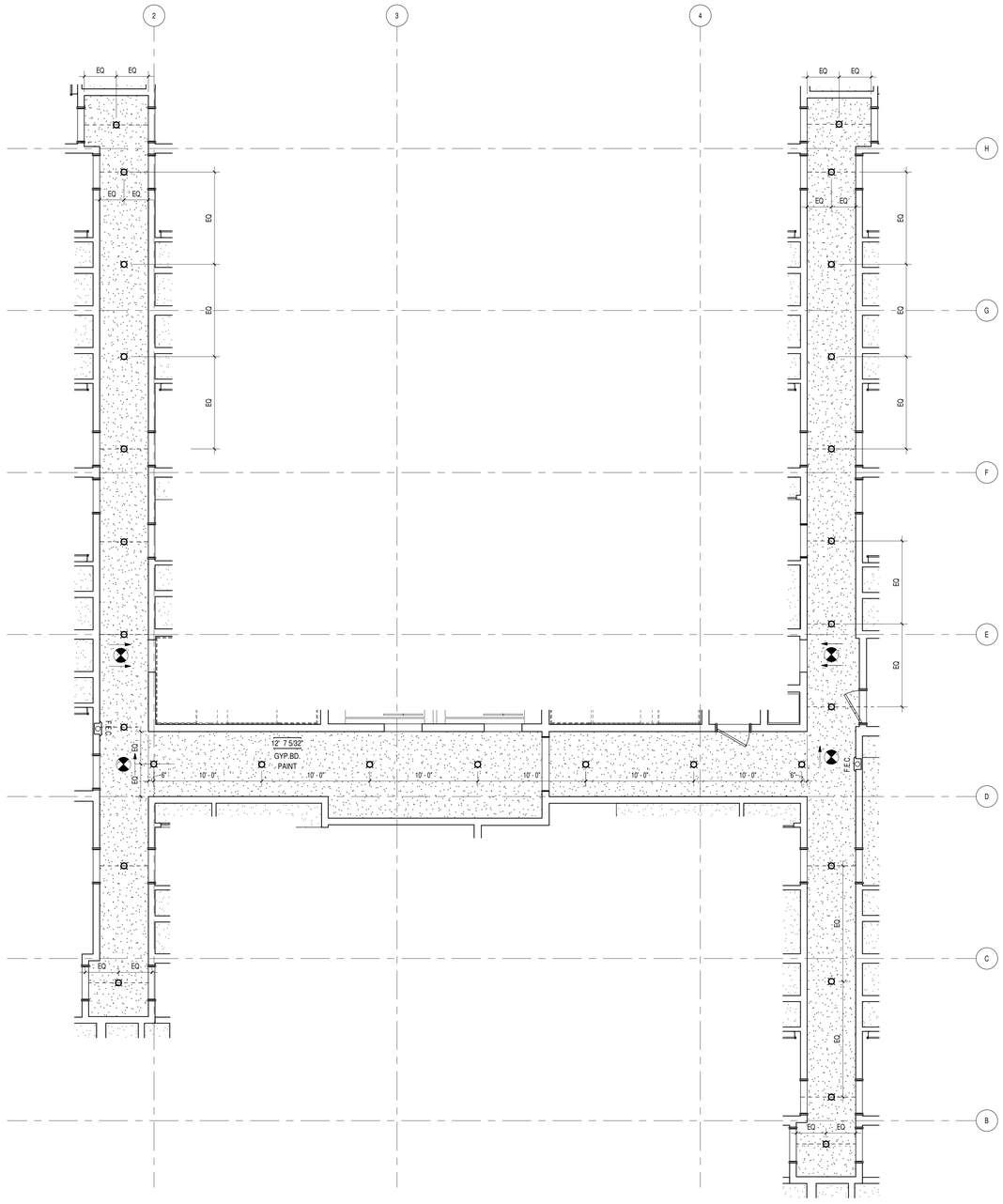

1 LEVEL 8 CORRIDOR RCP

3/16" = 1'-0"

LINK

LINK DESIGN GROUP LLC.

439 Kirkland Way
Kirkland, WA. US. 98033
+1.425.298.0080

602 Pengjiang RD, E461 ShangHai, China 200072
上海市静安区彭江路602号E座461室 邮编 200072
+86.21.6667.0228

Project No: Enter Client Supplied Number
XXXXXXXXXX

Client/Owner/Project Address

Owner
VIBRANT CITIES
606 Maynard Ave S
Suite 251
Seattle, WA 98104

Consultant

BLOSSOM APARTMENTS - COA SUBMITTAL

-

Issue Drawing Log

	09/04/20	INITIAL PRICING SET
	01/21/21	PERMIT SET SUBMITTAL
	03/05/21	COA SUBMITTAL

Professional Certification - I certify that these documents were prepared or approved by me, and that I am a duly licensed Architect under the laws of the state of Washington. License number _____. Expiration date _____.

8628 REGISTERED ARCHITECT
Jenny Li
JENNY LI
STATE OF WASHINGTON

SDCI APPROVAL STAMP

©LINK DESIGN GROUP LLC.
All rights reserved. No part of this document may be reproduced in any form or by any means without permission in writing from LINK DESIGN GROUP LLC.

PROJECT NUMBER	20-0108A
PROJECT MANAGER	JX
DRAWN BY	DS, MB

Sheet Identification

ENLARGED CORRIDOR PLAN & RCP - LEVEL 8

A312

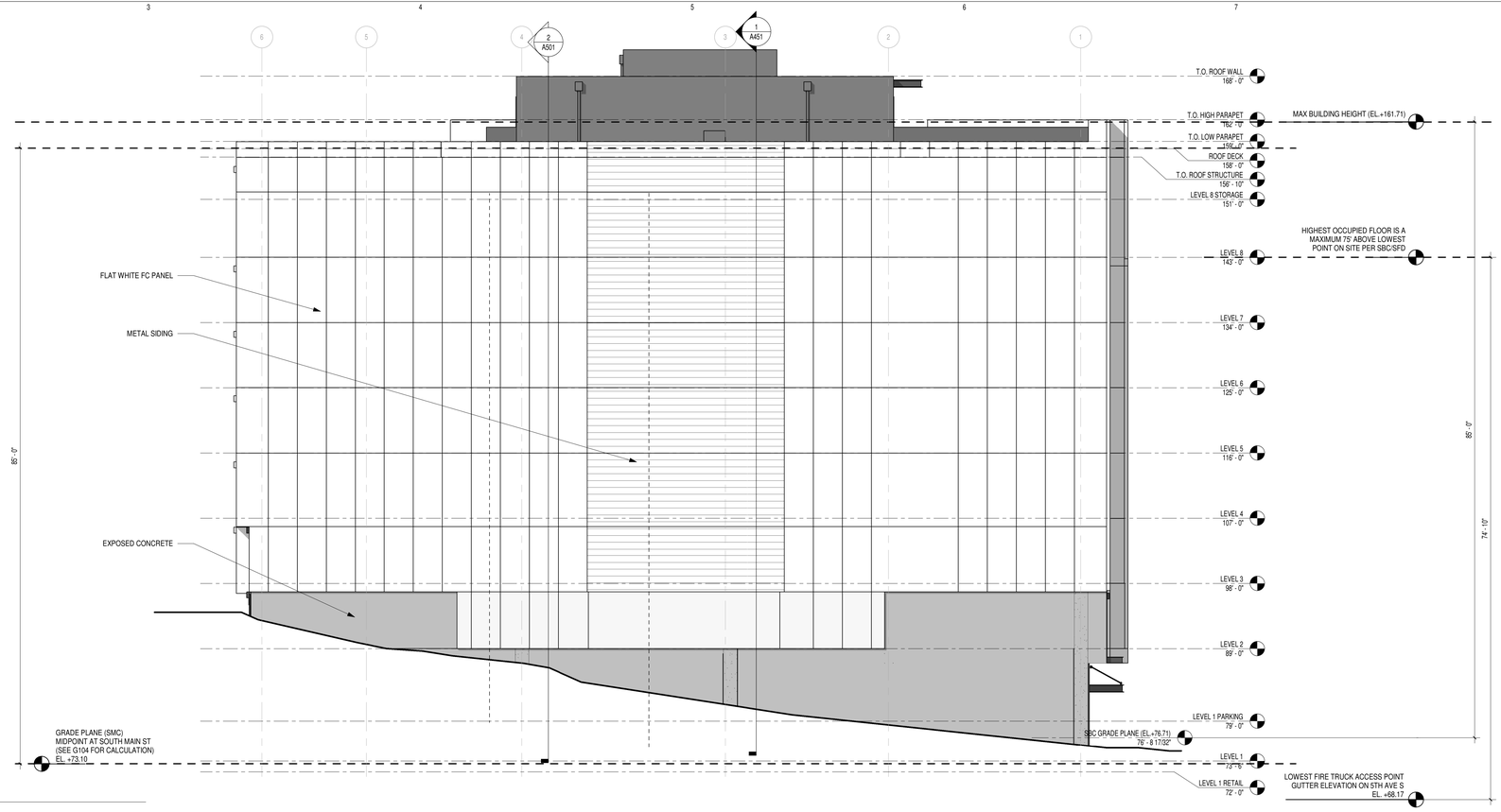

1 NORTH ELEV.
1/8" = 1'-0"

2 SOUTH ELEV.
1/8" = 1'-0"

LINK
LINK DESIGN GROUP LLC.
439 Kirkland Way
Kirkland, WA. US. 98033
+1.425.298.0080

602 Pengjiang RD, E461 ShangHai, China 200072
上海市静安区彭江路602号E座461室 邮编 200072
+86.21.6667.0228

Project No: Enter Client Supplied Number
XXXXXXXXXX

Client/Owner/Project Address

Owner
VIBRANT CITIES
606 Maynard Ave S
Suite 251
Seattle, WA 98104

Consultant

BLOSSOM APARTMENTS - COA SUBMITTAL

Issue Drawing Log

	09/04/20	INITIAL PRICING SET
	01/21/21	PERMIT SET SUBMITTAL
	03/05/21	COA SUBMITTAL

Professional Certification - I certify that these documents were prepared or approved by me, and that i am a duly licensed Architect under the laws of the state of Washington. License number _____, Expiration date _____.

8628 REGISTERED ARCHITECT
JENNY LI
STATE OF WASHINGTON

SDCI APPROVAL STAMP

©LINK DESIGN GROUP LLC.
All rights reserved. No part of this document may be reproduced in any form or by any means without permission in writing from LINK DESIGN GROUP LLC.

PROJECT NUMBER	20-0108A
PROJECT MANAGER	JX
DRAWN BY	DS, MB

Sheet Identification

EXTERIOR ELEVATIONS

A401

1 EAST ELEV.
1/8" = 1'-0"

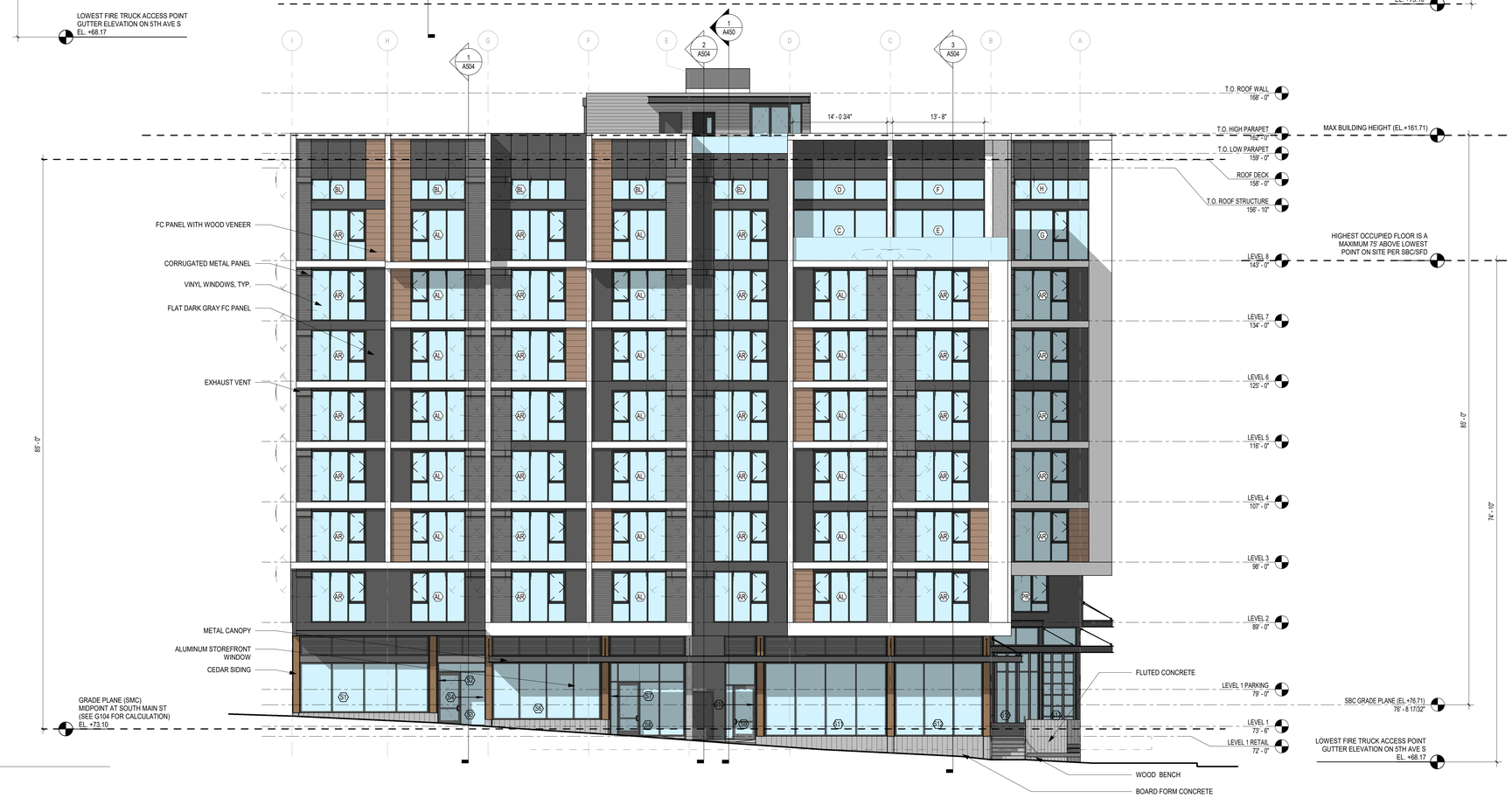

2 WEST ELEV.
1/8" = 1'-0"

LINK
LINK DESIGN GROUP LLC.
439 Kirkland Way
Kirkland, WA. US. 98033
+1.425.298.0080

602 Pengjiang RD, E461 ShangHai, China 200072
上海市静安区彭江路602号E座461室 邮编 200072
+86.21.6667.0228

Project No: Enter Client Supplied Number
XXXXXXXXXX

Client/Owner/Project Address

Owner
VIBRANT CITIES
606 Maynard Ave S
Suite 251
Seattle, WA 98104

Consultant

BLOSSOM APARTMENTS - COA SUBMITTAL

Issue Drawing Log

	09/04/20	INITIAL PRICING SET
	01/21/21	PERMIT SET SUBMITTAL
	03/05/21	COA SUBMITTAL

Professional Certification - I certify that these documents were prepared or approved by me, and that I am a duly licensed Architect under the laws of the state of Washington, License number _____, Expiration date _____.

8628 REGISTERED ARCHITECT
Jenny Li
JENNY LI
STATE OF WASHINGTON

SDCI APPROVAL STAMP

©LINK DESIGN GROUP LLC.
All rights reserved. No part of this document may be reproduced in any form or by any means without permission in writing from LINK DESIGN GROUP LLC.

PROJECT NUMBER	20-0108A
PROJECT MANAGER	JX
DRAWN BY	DS, MB

Sheet Identification

EXTERIOR ELEVATIONS

A402

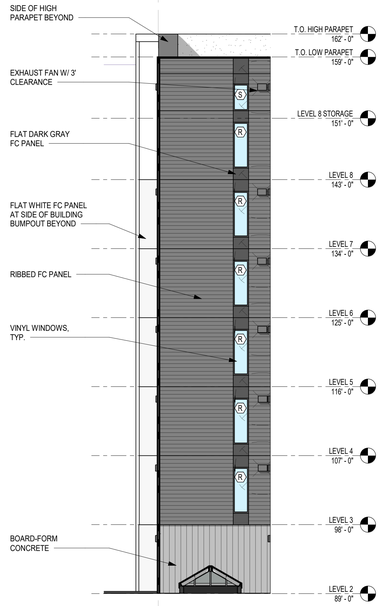

1 SOUTH NICHE_WEST
1/8" = 1'-0"

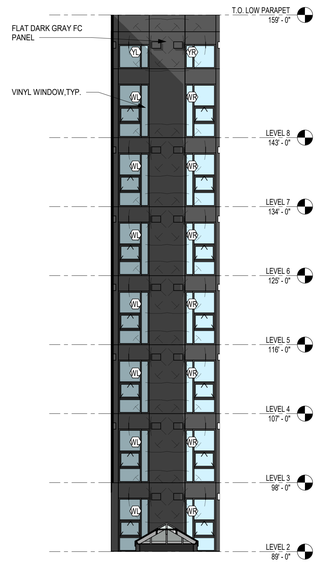

2 SOUTH NICHE_NORTH
1/8" = 1'-0"

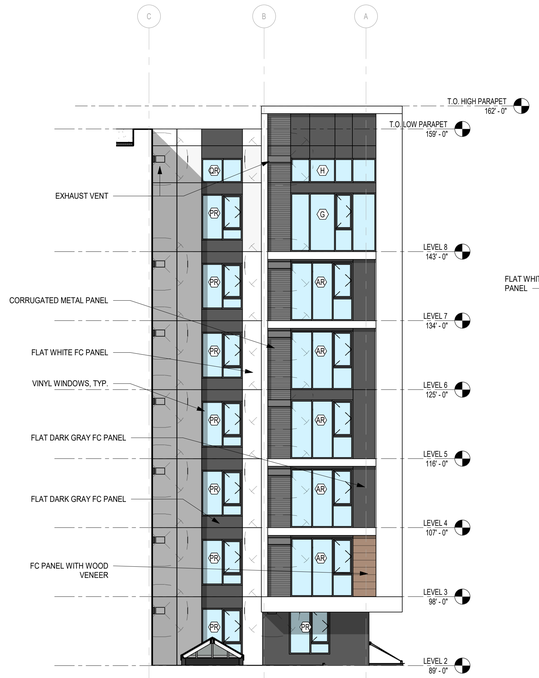

3 SOUTH NICHE_EAST
1/8" = 1'-0"

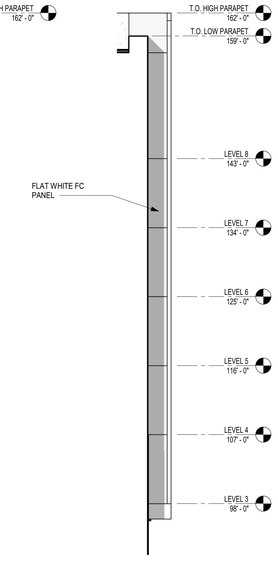

4 SOUTH NICHE_SOUTH
1/8" = 1'-0"

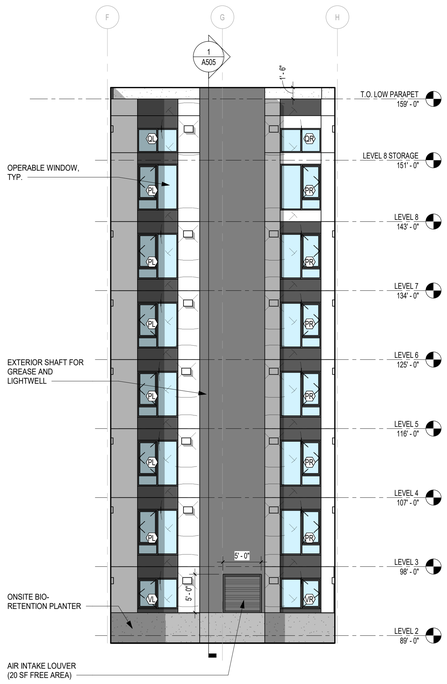

5 LIGHTWELL_WEST
1/8" = 1'-0"

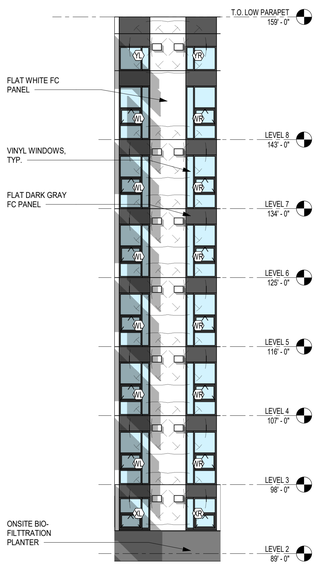

6 LIGHTWELL_NORTH
1/8" = 1'-0"

7 LIGHTWELL_EAST
1/8" = 1'-0"

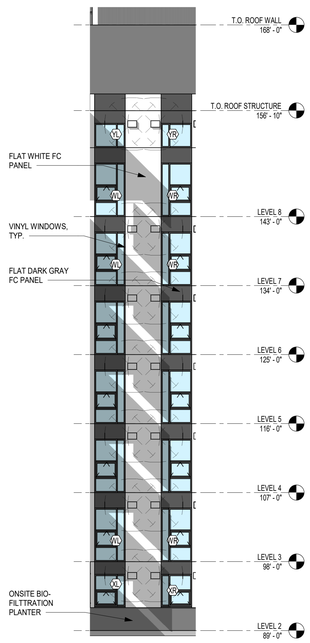

8 LIGHTWELL_SOUTH
1/8" = 1'-0"

LINK
LINK DESIGN GROUP LLC.
439 Kirkland Way
Kirkland, WA. US. 98033
+1.425.298.0080

602 Pengjiang RD, E461 ShangHai, China 200072
上海市静安区彭江路602号E座461室 邮编 200072
+86.21.6667.0228

Project No: Enter Client Supplied Number
XXXXXXXXXX

Client/Owner/Project Address

Owner
VIBRANT CITIES
606 Maynard Ave S
Suite 251
Seattle, WA 98104

Consultant

BLOSSOM APARTMENTS - COA SUBMITTAL

Issue Drawing Log

	09/04/20	INITIAL PRICING SET
	01/21/21	PERMIT SET SUBMITTAL
	03/05/21	COA SUBMITTAL

Professional Certification - I certify that these documents were prepared or approved by me, and that i am a duly licensed Architect under the laws of the state of Washington, License number _____, Expiration date _____.

8628 REGISTERED ARCHITECT
Jenny Li
JENNY LI
STATE OF WASHINGTON

SDCI APPROVAL STAMP

©LINK DESIGN GROUP LLC.
All rights reserved. No part of this document may be reproduced in any form or by any means without permission in writing from LINK DESIGN GROUP LLC.

PROJECT NUMBER	20-0108A
PROJECT MANAGER	JX
DRAWN BY	DS, MB

Sheet Identification

EXTERIOR ELEVATIONS

A403

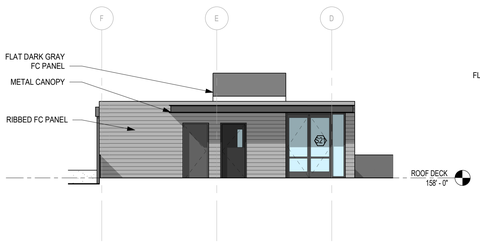

1 ROOF_WEST
1/8" = 1'-0"

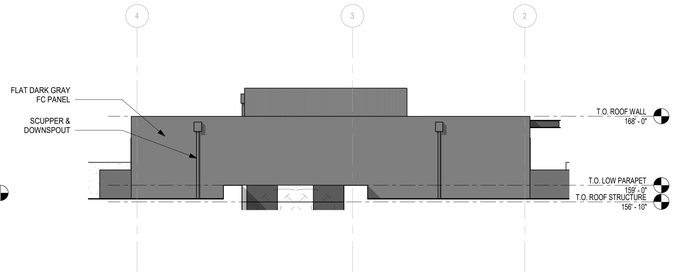

2 ROOF_NORTH
1/8" = 1'-0"

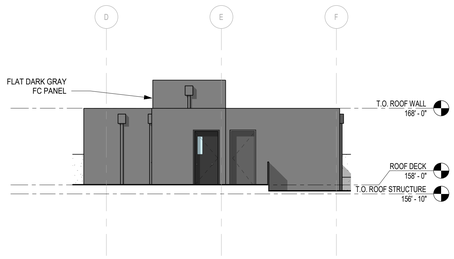

3 ROOF_EAST
1/8" = 1'-0"

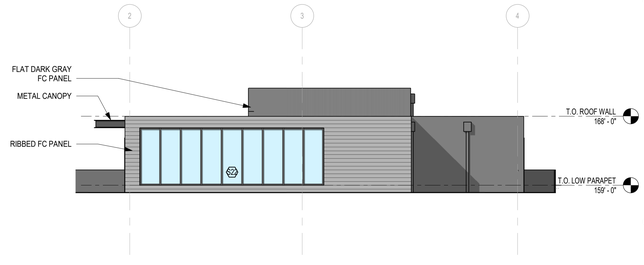

4 ROOF_SOUTH
1/8" = 1'-0"

LINK
LINK DESIGN GROUP LLC.
439 Kirkland Way
Kirkland, WA. US. 98033
+1.425.298.0080

602 Pengjiang RD, E461 ShangHai, China 200072
上海市静安区彭江路602号E座461室 邮编 200072
+86.21.6667.0228

Project No: Enter Client Supplied Number
XXXXXXXXXX

Client/Owner/Project Address

Owner
VIBRANT CITIES
606 Maynard Ave S
Suite 251
Seattle, WA 98104

Consultant

BLOSSOM APARTMENTS - COA SUBMITTAL

Issue Drawing Log

	09/04/20	INITIAL PRICING SET
	01/21/21	PERMIT SET SUBMITTAL
	03/05/21	COA SUBMITTAL

Professional Certification - I certify that these documents were prepared or approved by me, and that i am a duly licensed Architect under the laws of the state of Washington, License number _____, Expiration date _____.

8628
REGISTERED ARCHITECT
Jenny Li
JENNY LI
STATE OF WASHINGTON

SDCI APPROVAL STAMP

©LINK DESIGN GROUP LLC.
All rights reserved. No part of this document may be reproduced in any form or by any means without permission in writing from LINK DESIGN GROUP LLC.

PROJECT NUMBER	20-0108A
PROJECT MANAGER	JX
DRAWN BY	DS, MB

Sheet Identification

EXTERIOR ELEVATIONS

A404

1 ENLARGED SOUTH STOREFRONT ELEV - SLIDING DOORS

1/4" = 1'-0"

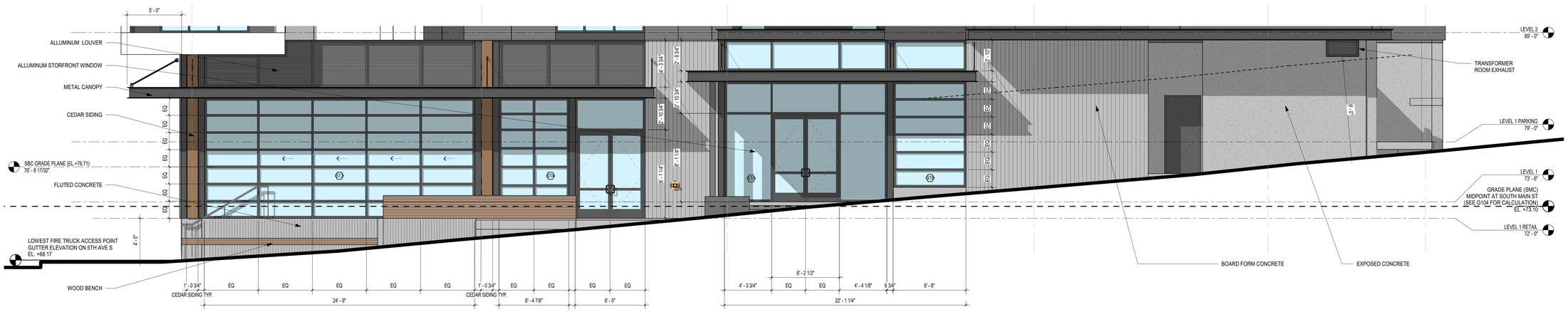

2 ENLARGED SOUTH STOREFRONT ELEV

1/4" = 1'-0"

3 ENLARGED WEST STOREFRONT ELEV

1/4" = 1'-0"

LINK

LINK DESIGN GROUP LLC.

439 Kirkland Way
Kirkland, WA. US. 98033
+1.425.298.0080

602 Pengjiang RD, E461 ShangHai, China 200072
上海市静安区彭江路602号E座461室 邮编 200072
+86.21.6667.0228

Project No: Enter Client Supplied Number
XXXXXXXXXX

Client/Owner/Project Address

Owner
VIBRANT CITIES
606 Maynard Ave S
Suite 251
Seattle, WA 98104

Consultant

BLOSSOM APARTMENTS - COA SUBMITTAL

Issue Drawing Log

	05/18/18	PRELIM. PRICING SET
	07/13/18	PERMIT SET
	01/14/19	GMP SET
	06/03/19	LUX #1
6	03/06/2020	IFC SET
7	07/01/2020	ASI #3
7 R1	07/01/2020	ASI #3 REVISION #1
8	07/29/2020	ASI #4
9	10/23/2020	ASI #5
	10/23/2020	POST PERMIT REVISION

Professional Certification - I certify that these documents were prepared or approved by me, and that I am a duly licensed Architect under the laws of the state of Washington, License number _____, Expiration date _____.

8628 REGISTERED ARCHITECT
Jenny Li
JENNY LI
STATE OF WASHINGTON

©LINK DESIGN GROUP LLC.
All rights reserved. No part of this document may be reproduced in any form or by any means without permission in writing from LINK DESIGN GROUP LLC.

PROJECT NUMBER	17-108717
PROJECT MANAGER	JX
DRAWN BY	CS, LM

Sheet Identification

ENLARGED STOREFRONT ELEVATION

A405

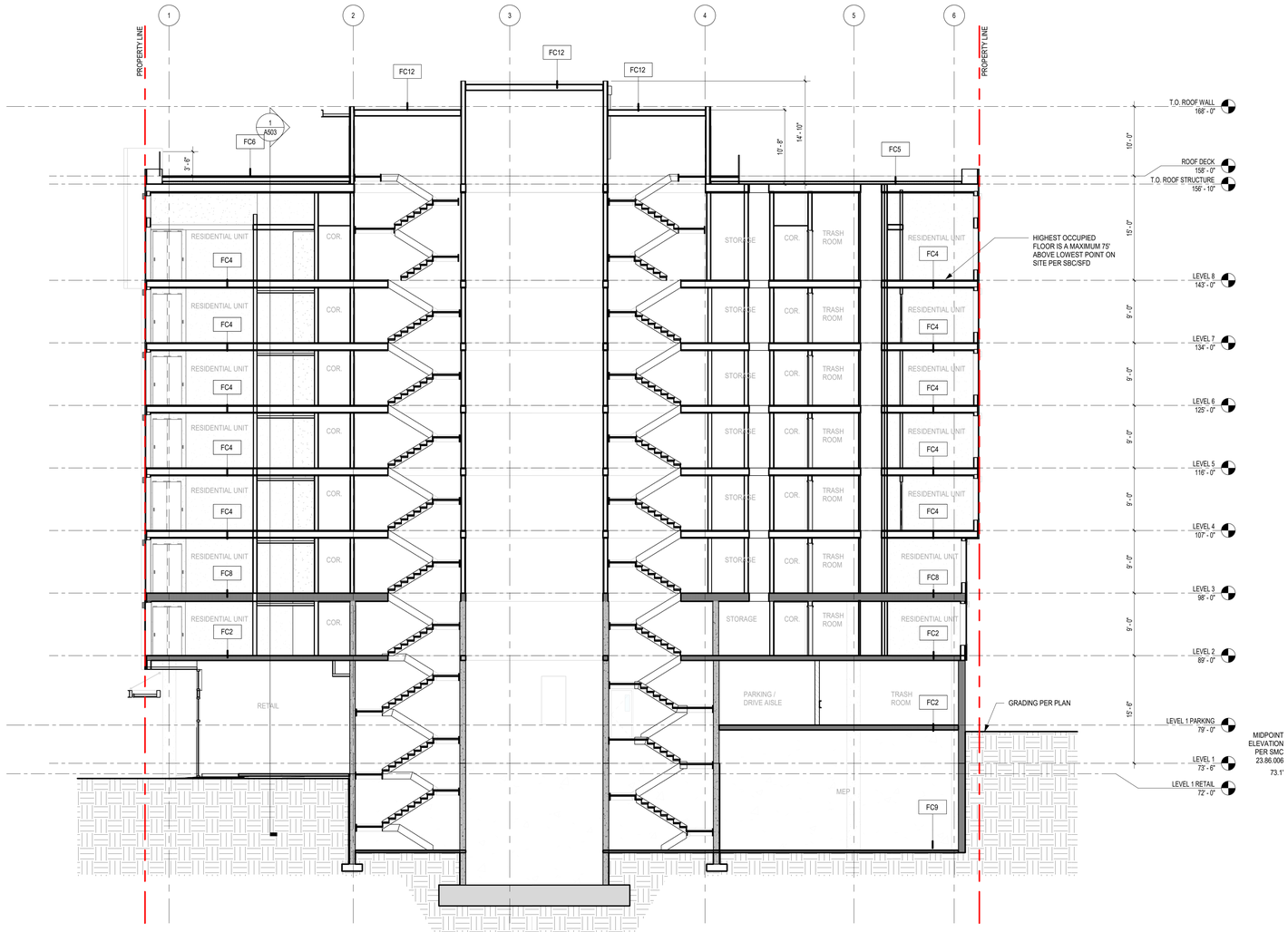

1 EAST-WEST BUILDING SECTION

1/8" = 1'-0"

LINK

LINK DESIGN GROUP LLC.

439 Kirkland Way
Kirkland, WA. US. 98033
+1.425.298.0080

602 Pengjiang RD, E461 ShangHai, China 200072
上海市静安区彭江路602号E座461室 邮编 200072
+86.21.6667.0228

Project No: Enter Client Supplied Number
XXXXXXXXXX

Client/Owner/Project Address

Owner

VIBRANT CITIES
606 Maynard Ave S
Suite 251
Seattle, WA 98104

Consultant

BLOSSOM APARTMENTS - COA SUBMITTAL

Issue Drawing Log

	09/04/20	INITIAL PRICING SET
	01/21/21	PERMIT SET SUBMITTAL
	03/05/21	COA SUBMITTAL

Professional Certification - I certify that these documents were prepared or approved by me, and that I am a duly licensed Architect under the laws of the state of Washington, License number _____, Expiration date _____.

8628 REGISTERED ARCHITECT
Jenny Li
JENNY LI
STATE OF WASHINGTON

SDCI APPROVAL STAMP

©LINK DESIGN GROUP LLC.
All rights reserved. No part of this document may be reproduced in any form or by any means without permission in writing from LINK DESIGN GROUP LLC.

PROJECT NUMBER	20-0108A
PROJECT MANAGER	JX
DRAWN BY	DS, MB

Sheet Identification

BUILDING SECTIONS

A450

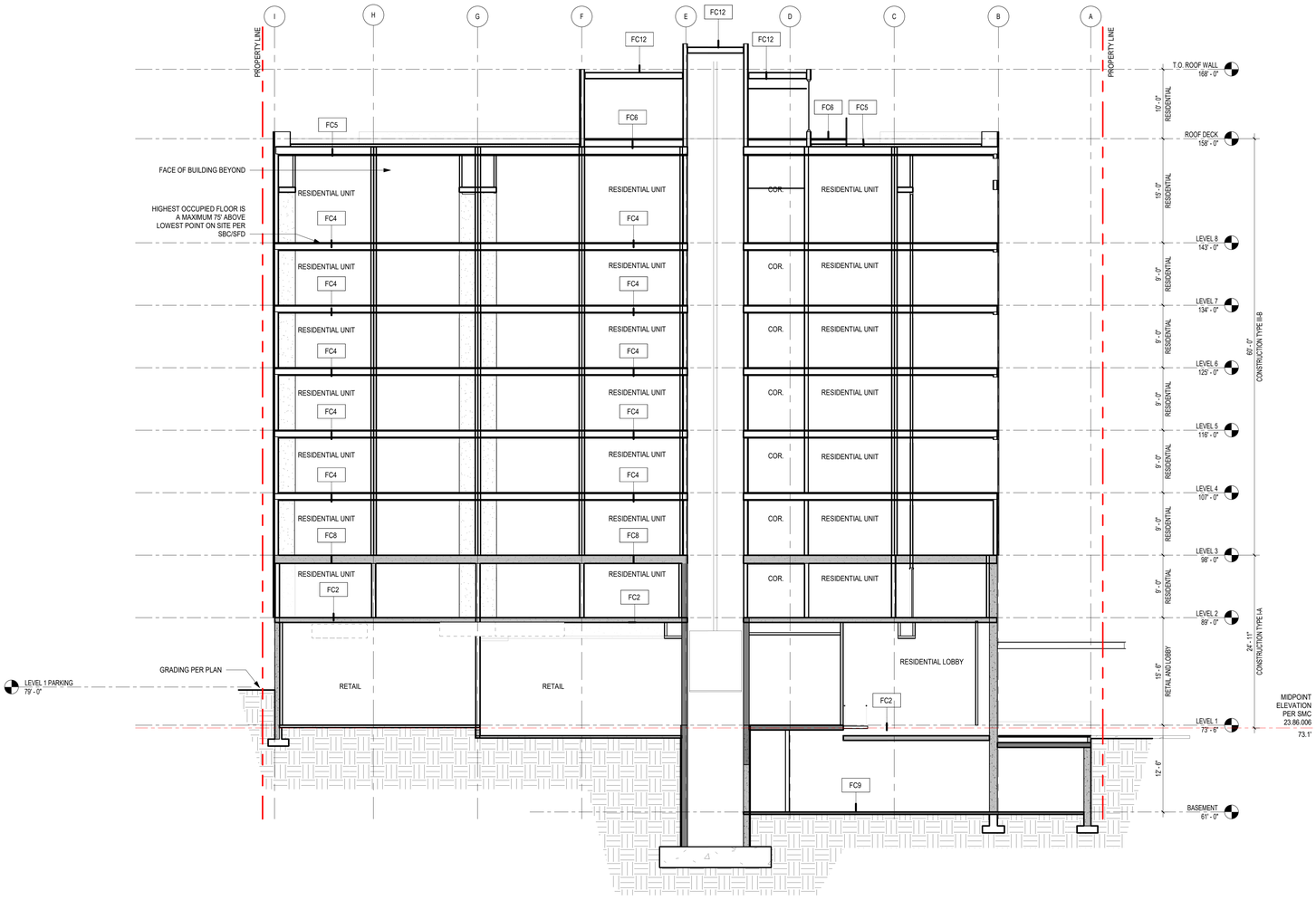

1 NS BUILDING SECTION

1/8" = 1'-0"

LINK

LINK DESIGN GROUP LLC.

439 Kirkland Way
Kirkland, WA. US. 98033
+1.425.298.0080

602 Pengjiang RD, E461 ShangHai, China 200072
上海市静安区彭江路602号E座461室 邮编 200072
+86.21.6667.0228

Project No: Enter Client Supplied Number XXXXXXXXXX

Client/Owner/Project Address

Owner

VIBRANT CITIES
606 Maynard Ave S
Suite 251
Seattle, WA 98104

Consultant

BLOSSOM APARTMENTS - COA SUBMITTAL

Issue Drawing Log

	09/04/20	INITIAL PRICING SET
	01/21/21	PERMIT SET SUBMITTAL
	03/05/21	COA SUBMITTAL

Professional Certification - I certify that these documents were prepared or approved by me, and that i am a duly licensed Architect under the laws of the state of Washington. License number _____. Expiration date _____

8628 REGISTERED ARCHITECT JENNY LI STATE OF WASHINGTON

SDCI APPROVAL STAMP

©LINK DESIGN GROUP LLC.
All rights reserved. No part of this document may be reproduced in any form or by any means without permission in writing from LINK DESIGN GROUP LLC.

PROJECT NUMBER	20-0108A
PROJECT MANAGER	JX
DRAWN BY	DS, MB

Sheet Identification

BUILDING SECTIONS

A451

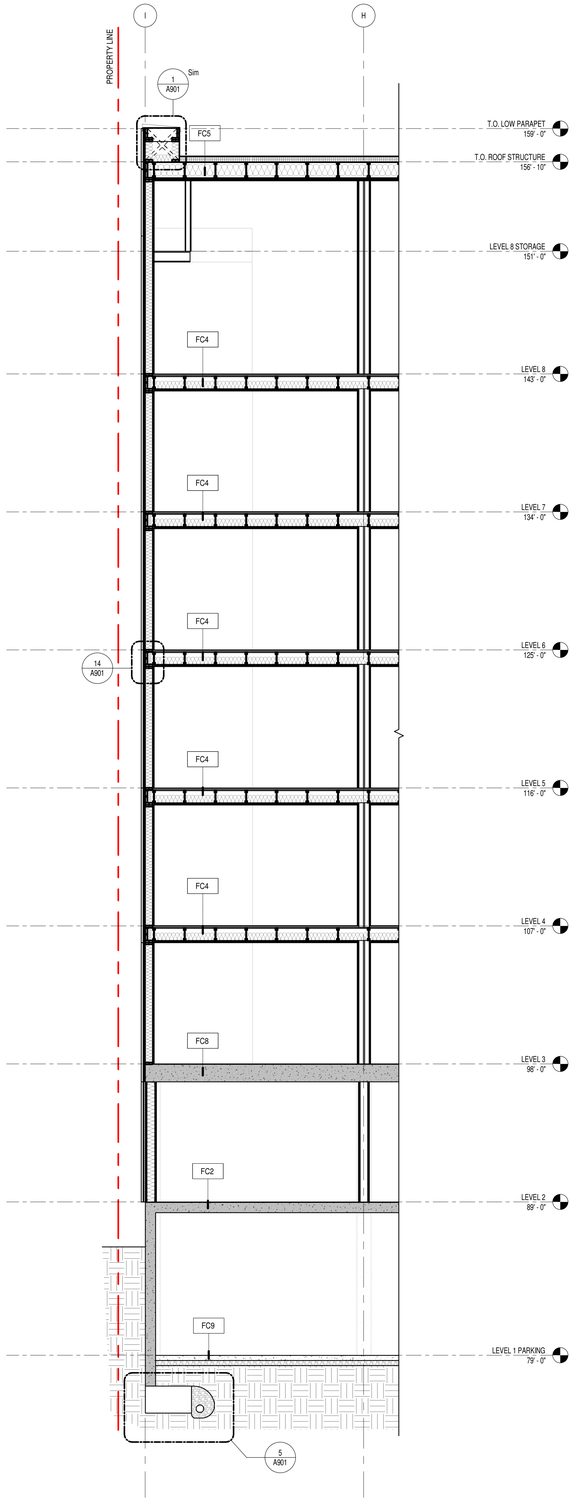

2 NORTH - WALL SECTION 2

1/4" = 1'-0"

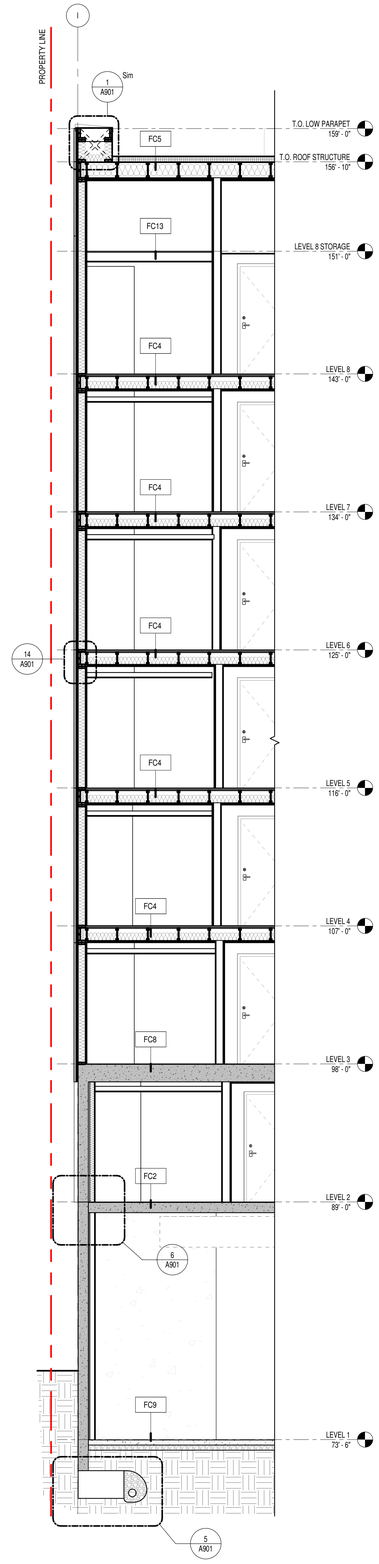

1 NORTH - WALL SECTION 1

1/4" = 1'-0"

LINK

LINK DESIGN GROUP LLC.

439 Kirkland Way
Kirkland, WA. US. 98033
+1.425.298.0080

602 Pengjiang RD, E461 ShangHai, China 200072
上海市静安区彭江路602号E座461室 邮编 200072
+86.21.6667.0228

Project No: Enter Client Supplied Number
XXXXXXXXXX

Client/Owner/Project Address

Owner
VIBRANT CITIES
606 Maynard Ave S
Suite 251
Seattle, WA 98104

Consultant

BLOSSOM APARTMENTS - COA SUBMITTAL

Issue Drawing Log

	09/04/20	INITIAL PRICING SET
	01/21/21	PERMIT SET SUBMITTAL
	03/05/21	COA SUBMITTAL

Professional Certification - I certify that these documents were prepared or approved by me, and that i am a duly licensed Architect under the laws of the state of Washington. License number _____. Expiration date _____.

8628 REGISTERED ARCHITECT JENNY LI STATE OF WASHINGTON

SDCI APPROVAL STAMP

©LINK DESIGN GROUP LLC.
All rights reserved. No part of this document may be reproduced in any form or by any means without permission in writing from LINK DESIGN GROUP LLC.

PROJECT NUMBER	20-0108A
PROJECT MANAGER	JX
DRAWN BY	DS, MB

Sheet Identification

WALL SECTIONS

A501

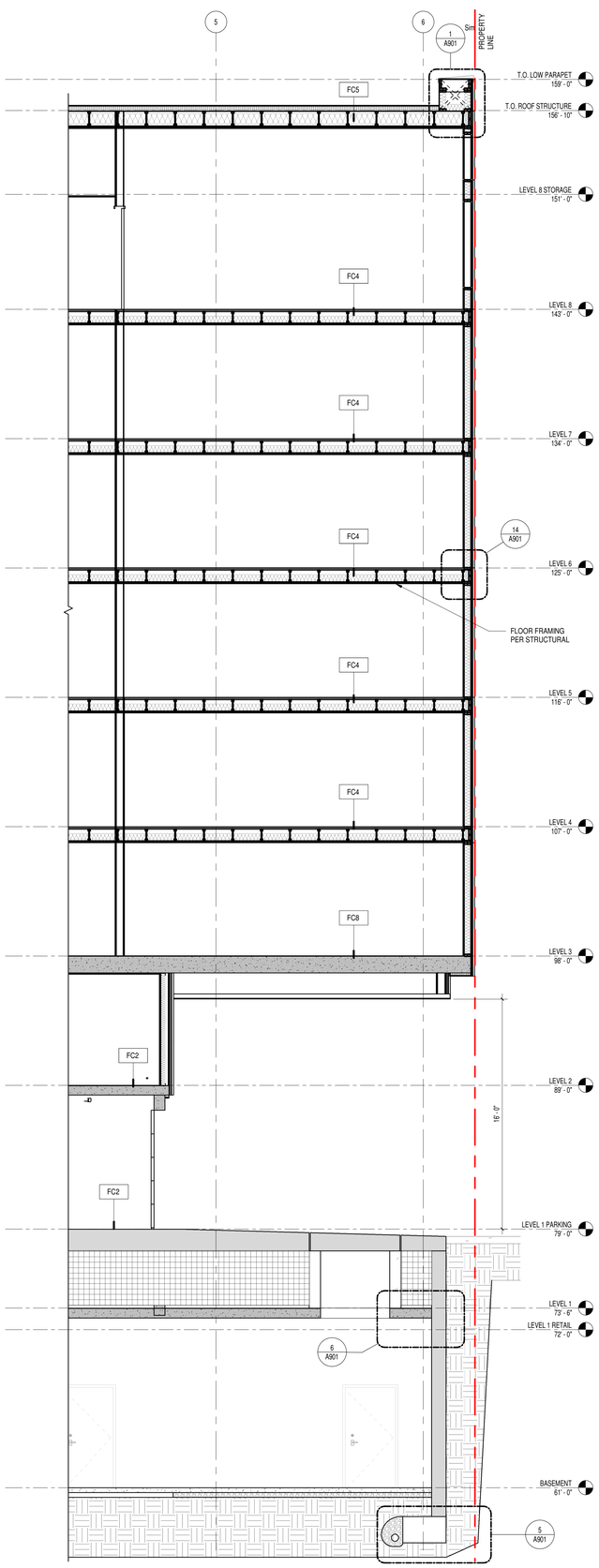

1 EAST - WALL SECTION 1

1/4" = 1'-0" REFERENCE: 1 A201

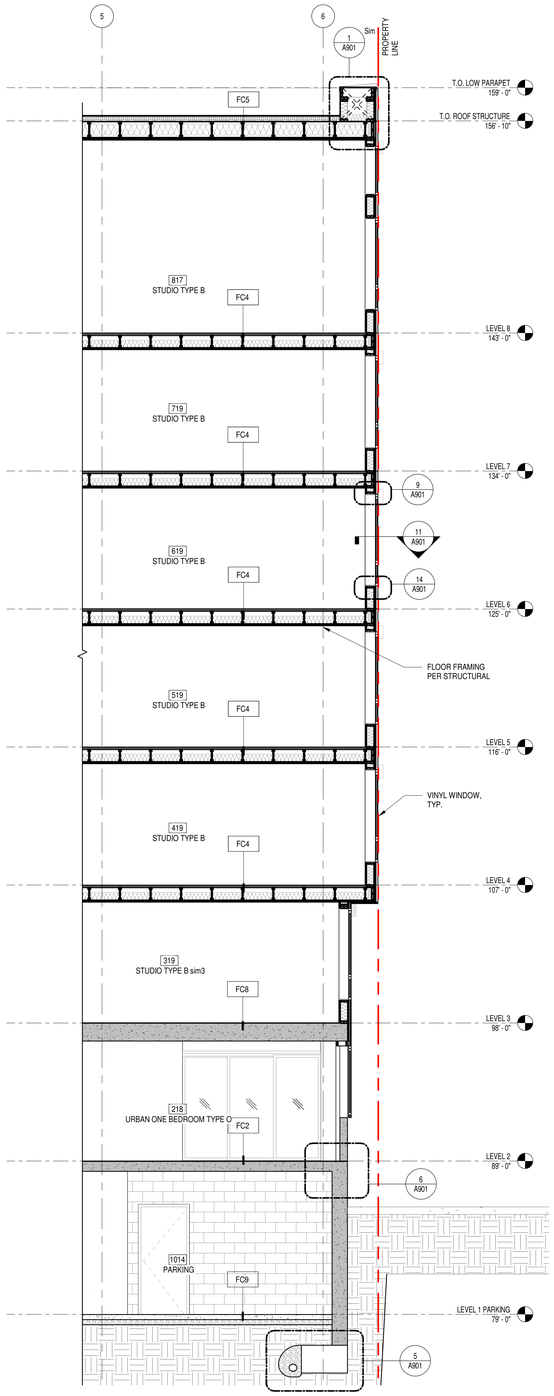

2 EAST - WALL SECTION 2

1/4" = 1'-0" REFERENCE: 1 A201

LINK

LINK DESIGN GROUP LLC.

439 Kirkland Way
Kirkland, WA. US. 98033
+1.425.298.0080

602 Pengjiang RD, E461 ShangHai, China 200072
上海市静安区彭江路602号E座461室 邮编 200072
+86.21.6667.0228

Project No: Enter Client Supplied Number
XXXXXXXXXX

Client/Owner/Project Address

Owner
VIBRANT CITIES
606 Maynard Ave S
Suite 251
Seattle, WA 98104

Consultant

BLOSSOM APARTMENTS - COA SUBMITTAL

Issue Drawing Log

	09/04/20	INITIAL PRICING SET
	01/21/21	PERMIT SET SUBMITTAL
	03/05/21	COA SUBMITTAL

Professional Certification - I certify that these documents were prepared or approved by me, and that I am a duly licensed Architect under the laws of the state of Washington, License number _____, Expiration date _____.

8628
REGISTERED ARCHITECT
Jenny Li
JENNY LI
STATE OF WASHINGTON

SDCI APPROVAL STAMP

©LINK DESIGN GROUP LLC.
All rights reserved. No part of this document may be reproduced in any form or by any means without permission in writing from LINK DESIGN GROUP LLC.

PROJECT NUMBER	20-0108A
PROJECT MANAGER	JX
DRAWN BY	DS, MB

Sheet Identification

WALL SECTIONS

A502

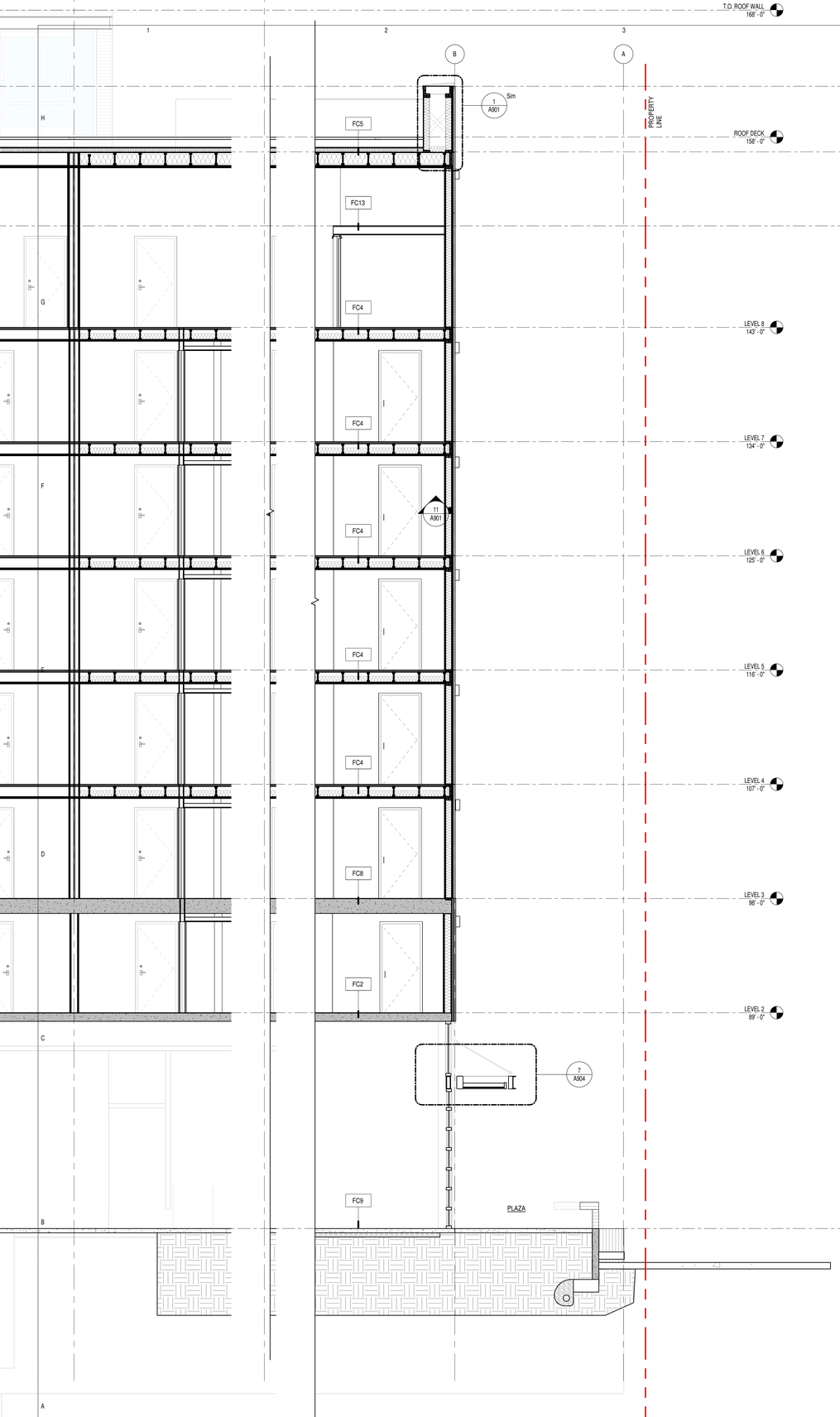

1 SOUTH - WALL SECTION 1

1/4" = 1'-0"

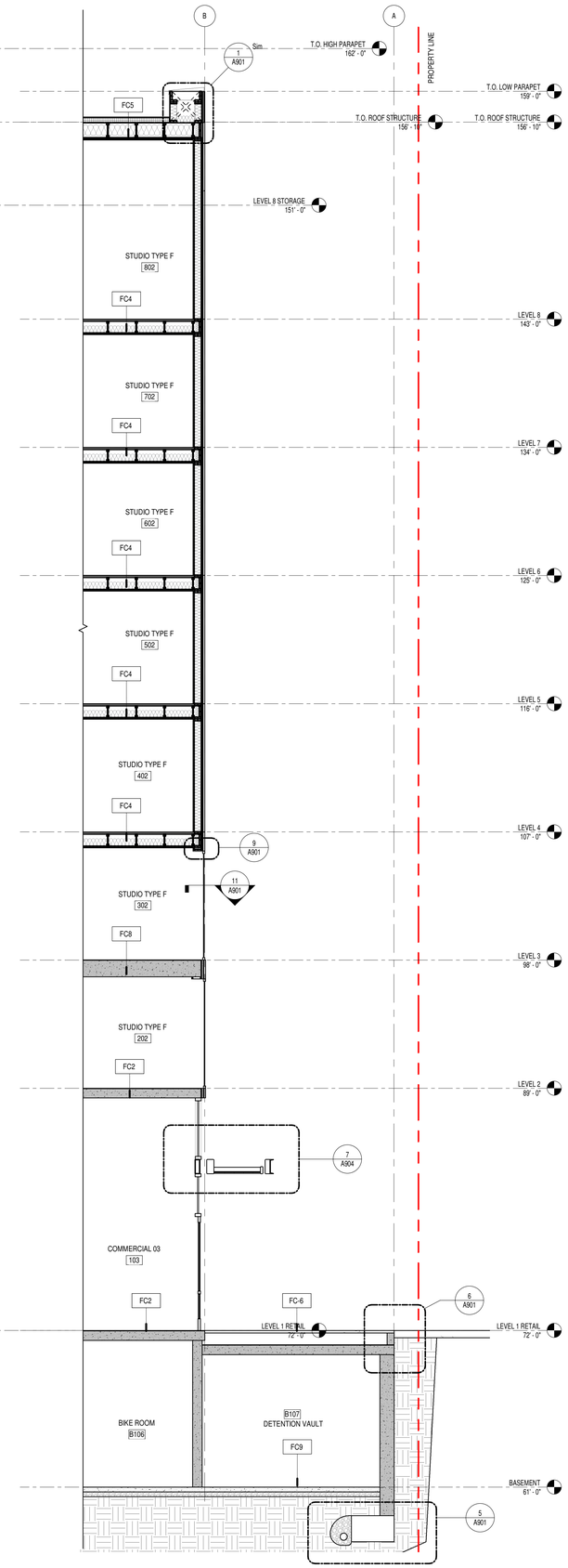

2 SOUTH - WALL SECTION 1A

1/4" = 1'-0" REFERENCE: 1 A201

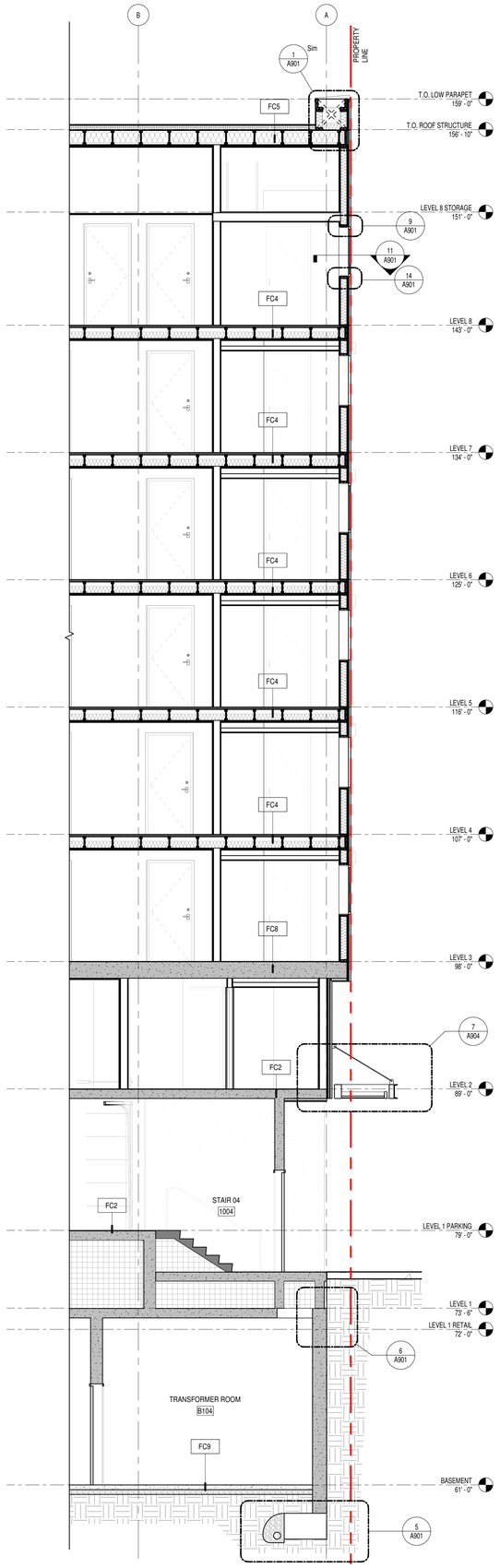

3 SOUTH - WALL SECTION 3

1/4" = 1'-0" REFERENCE: 1 A201

LINK

LINK DESIGN GROUP LLC.

439 Kirkland Way
Kirkland, WA. US. 98033
+1.425.298.0080

602 Pengjiang RD, E461 ShangHai, China 200072
上海市静安区彭江路602号E座461室 邮编 200072
+86.21.6667.0228

Project No: Enter Client Supplied Number
XXXXXXXXXX

Client/Owner/Project Address

Owner
VIBRANT CITIES
606 Maynard Ave S
Suite 251
Seattle, WA 98104

Consultant

BLOSSOM APARTMENTS - COA SUBMITTAL

Issue Drawing Log

	09/04/20	INITIAL PRICING SET
	01/21/21	PERMIT SET SUBMITTAL
	03/05/21	COA SUBMITTAL

Professional Certification - I certify that these documents were prepared or approved by me, and that I am a duly licensed Architect under the laws of the state of Washington, License number _____, Expiration date _____.

8628 REGISTERED ARCHITECT
Jenny Li
JENNY LI
STATE OF WASHINGTON

SDCI APPROVAL STAMP

©LINK DESIGN GROUP LLC.
All rights reserved. No part of this document may be reproduced in any form or by any means without permission in writing from LINK DESIGN GROUP LLC.

PROJECT NUMBER	20-0108A
PROJECT MANAGER	JX
DRAWN BY	DS, MB

Sheet Identification

WALL SECTIONS

A503

C:\Users\Daqi\Documents\200108A_Blossom Apartments_tony.xu22.rvt 10/15/2021 3:53:04 PM

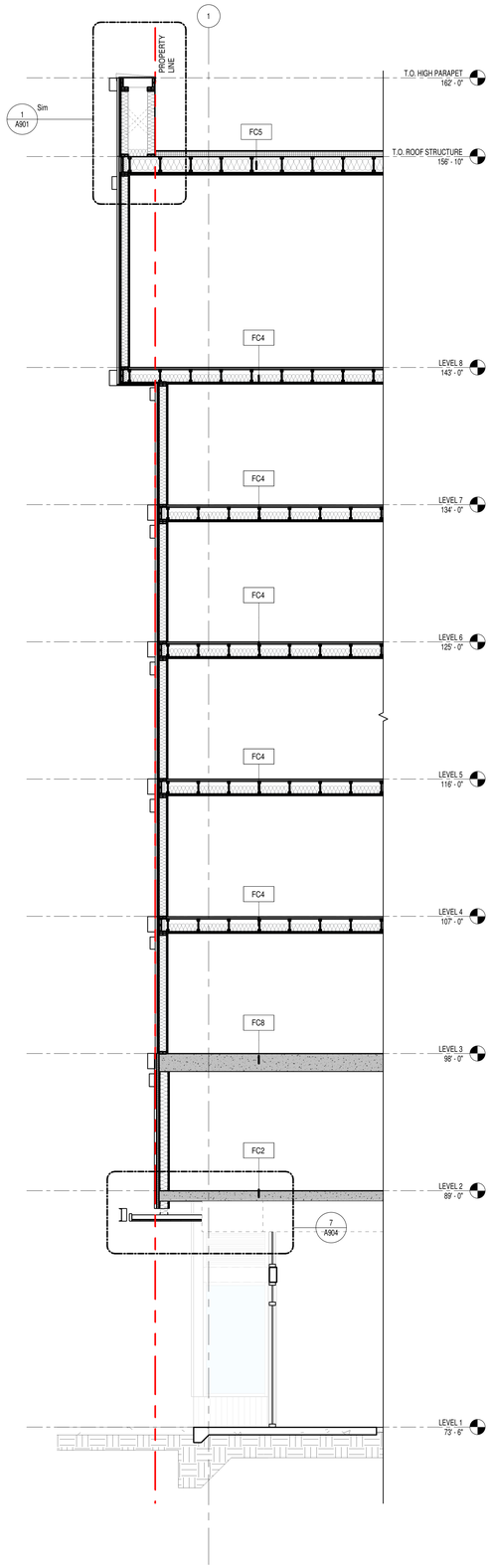

1 WEST - WALL SECTION 1

1/4" = 1'-0"

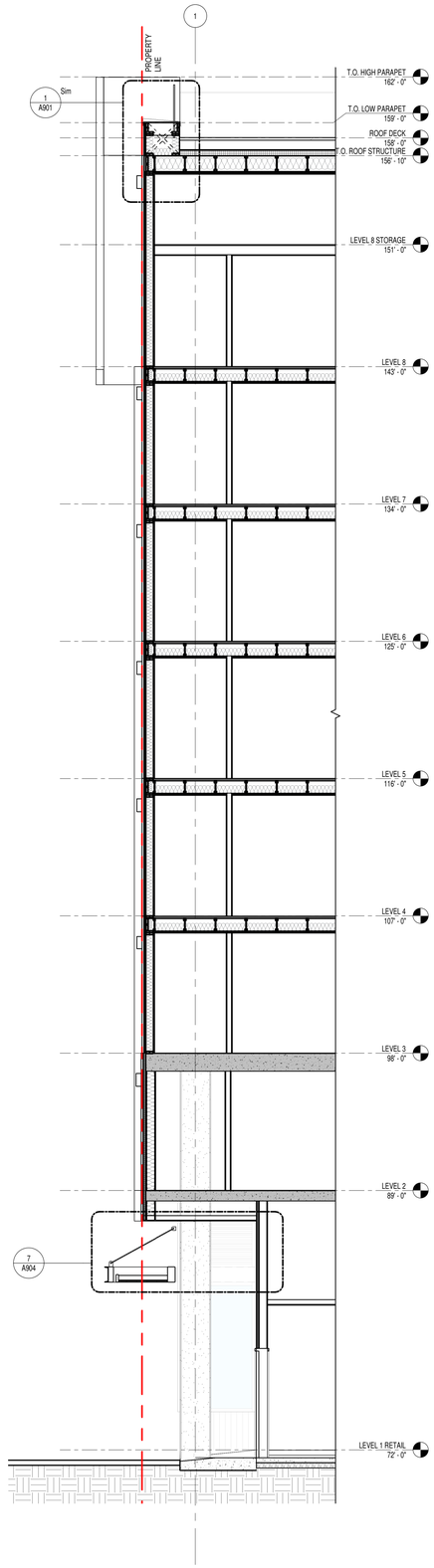

2 WEST - WALL SECTION 2

1/4" = 1'-0"

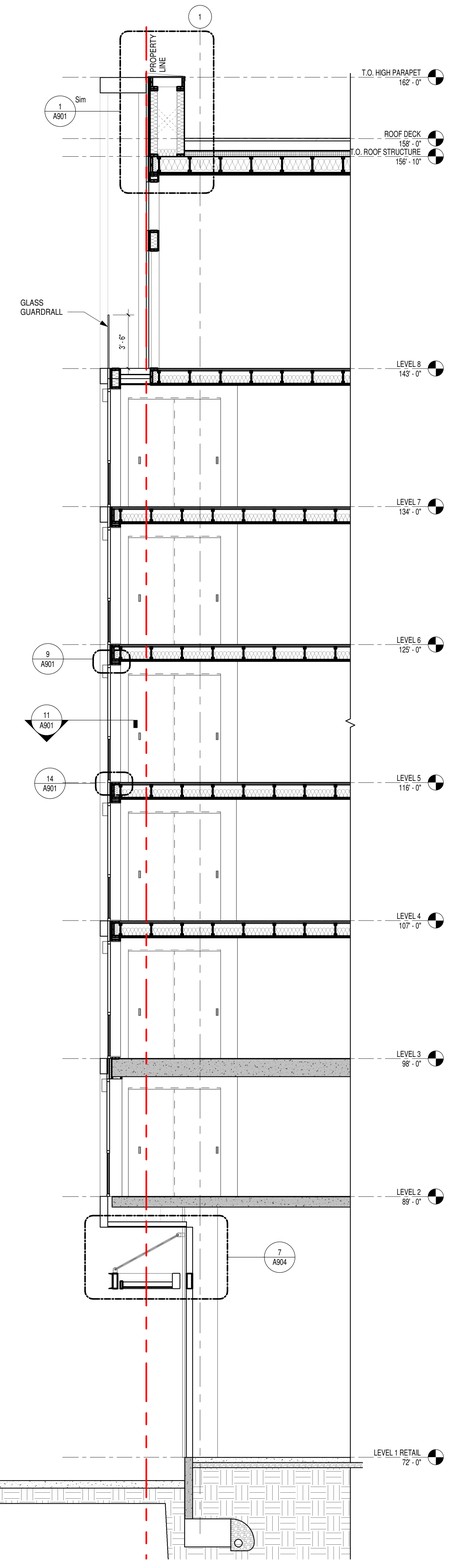

3 WEST - WALL SECTION 3

1/4" = 1'-0"

LINK

LINK DESIGN GROUP LLC.

439 Kirkland Way
Kirkland, WA. US. 98033
+1.425.298.0080

602 Pengjiang RD, E461 ShangHai, China 200072
上海市静安区彭江路602号E座461室 邮编 200072
+86.21.6667.0228

Project No: Enter Client Supplied Number
XXXXXXXXXX

Client/Owner/Project Address

Owner
VIBRANT CITIES
606 Maynard Ave S
Suite 251
Seattle, WA 98104

Consultant

BLOSSOM APARTMENTS - COA SUBMITTAL

Issue Drawing Log

	09/04/20	INITIAL PRICING SET
	01/21/21	PERMIT SET SUBMITTAL
	03/05/21	COA SUBMITTAL

Professional Certification - I certify that these documents were prepared or approved by me, and that I am a duly licensed Architect under the laws of the state of Washington. License number _____, Expiration date _____.

8628 REGISTERED ARCHITECT
JENNY LI
STATE OF WASHINGTON

SDCI APPROVAL STAMP

©LINK DESIGN GROUP LLC.
All rights reserved. No part of this document may be reproduced in any form or by any means without permission in writing from LINK DESIGN GROUP LLC.

PROJECT NUMBER	20-0108A
PROJECT MANAGER	JX
DRAWN BY	DS, MB

Sheet Identification

WALL SECTIONS

A504

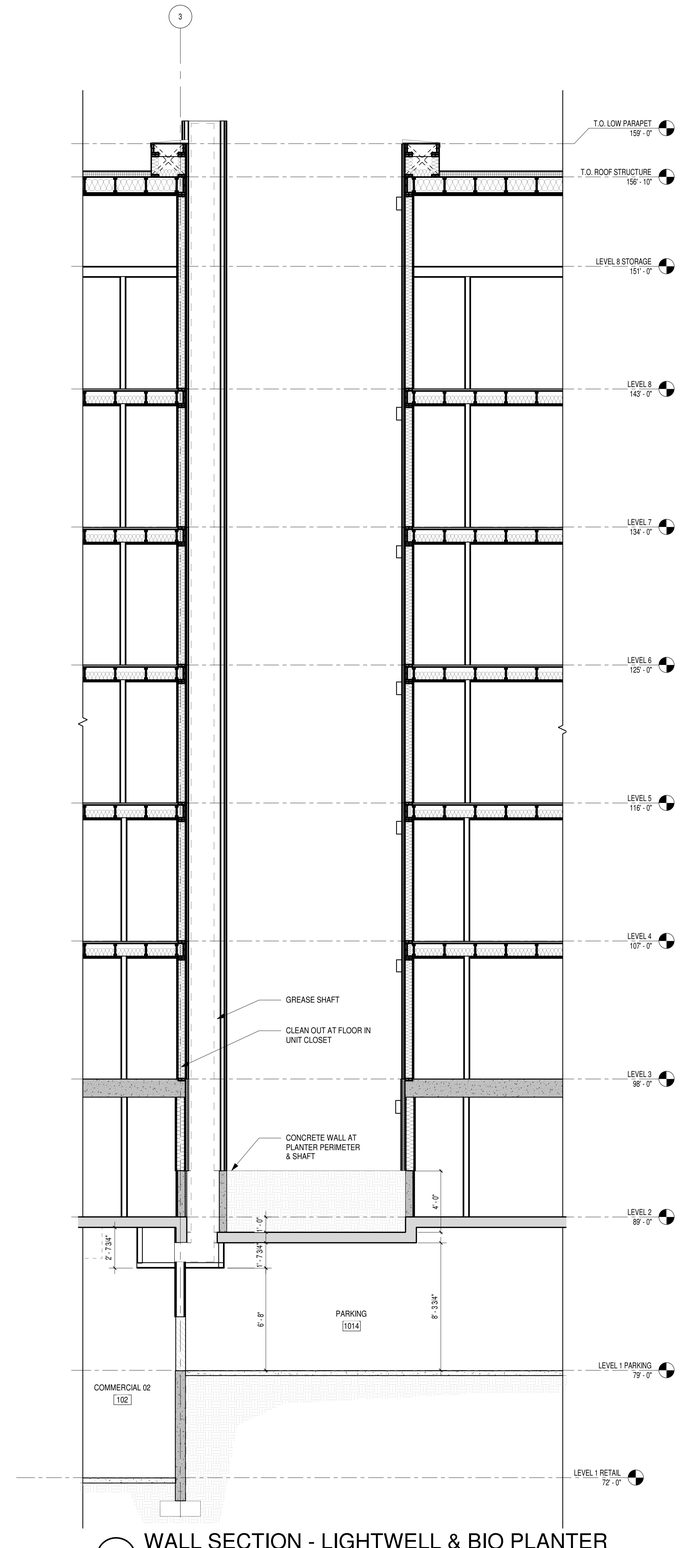

1 WALL SECTION - LIGHTWELL & BIO PLANTER

1/4" = 1'-0"

LINK

LINK DESIGN GROUP LLC.

439 Kirkland Way
Kirkland, WA. US. 98033
+1.425.298.0080

602 Pengjiang RD, E461 ShangHai, China 200072
上海市静安区彭江路602号E座461室 邮编 200072
+86.21.6667.0228

Project No: Enter Client Supplied Number
XXXXXXXXXX

Client/Owner/Project Address

Owner
VIBRANT CITIES
606 Maynard Ave S
Suite 251
Seattle, WA 98104

Consultant

BLOSSOM APARTMENTS - COA SUBMITTAL

-

Issue Drawing Log

	09/04/20	INITIAL PRICING SET
	01/21/21	PERMIT SET SUBMITTAL
	03/05/21	COA SUBMITTAL

Professional Certification - I certify that these documents were prepared or approved by me, and that i am a duly licensed Architect under the laws of the state of Washington, License number _____, Expiration date _____.

8628
REGISTERED ARCHITECT
Jenny Li
JENNY LI
STATE OF WASHINGTON

SDCI APPROVAL STAMP

©LINK DESIGN GROUP LLC.
All rights reserved. No part of this document may be reproduced in any form or by any means without permission in writing from LINK DESIGN GROUP LLC.

PROJECT NUMBER	20-0108A
PROJECT MANAGER	JX
DRAWN BY	DS, MB

Sheet Identification

WALL SECTIONS

A505

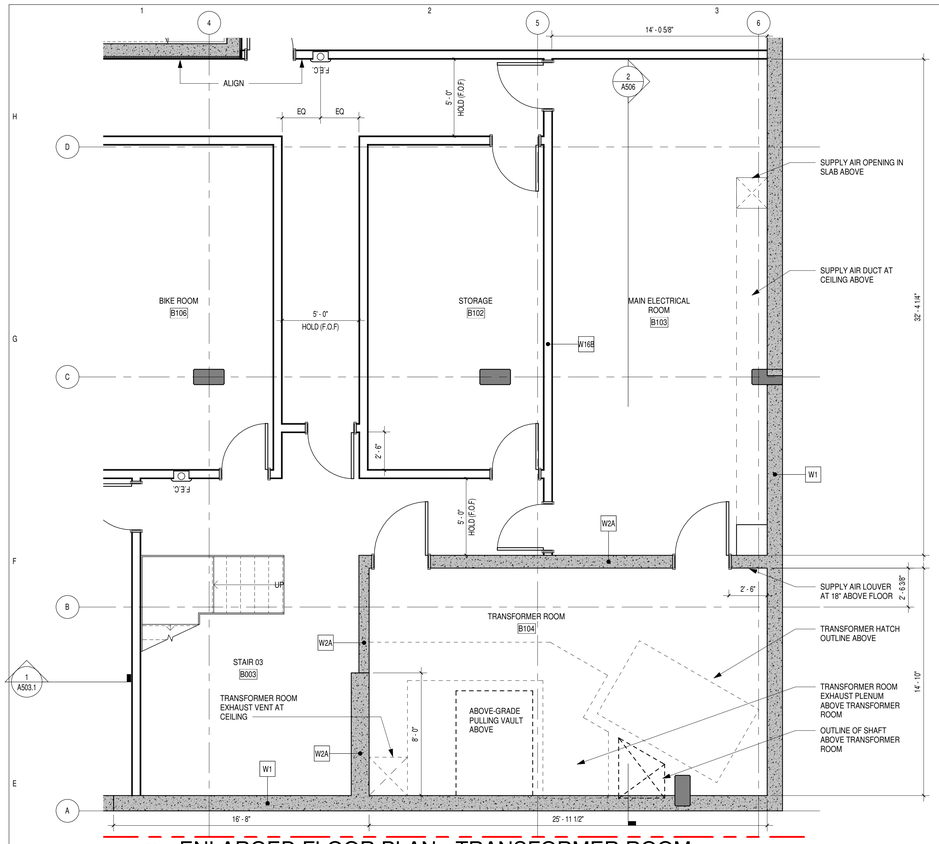

1 ENLARGED FLOOR PLAN - TRANSFORMER ROOM

1/4" = 1'-0"

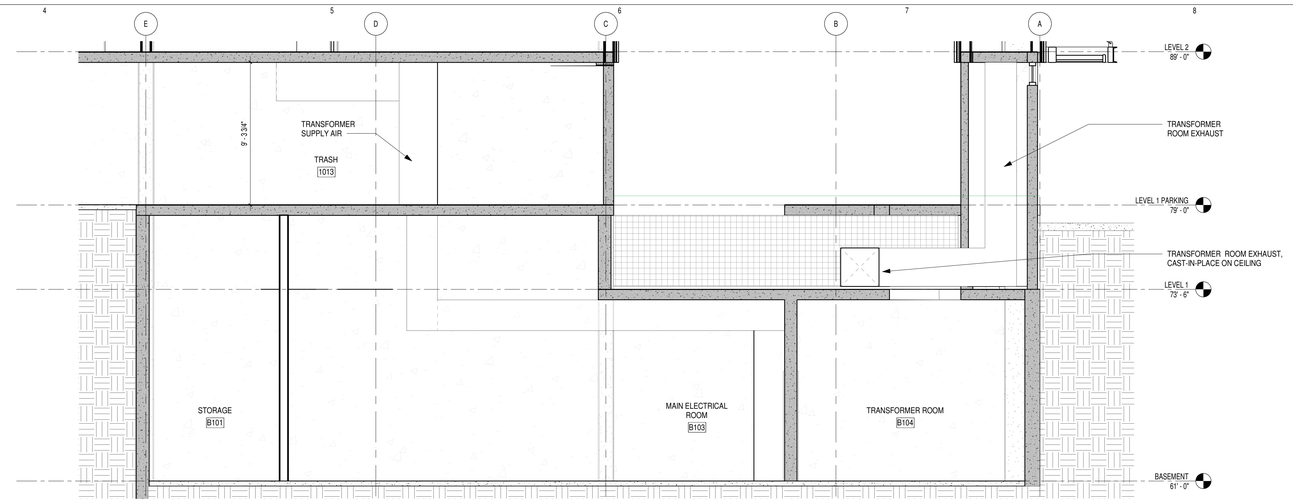

2 TRANSFORMER ROOM SUPPLY

1/4" = 1'-0"

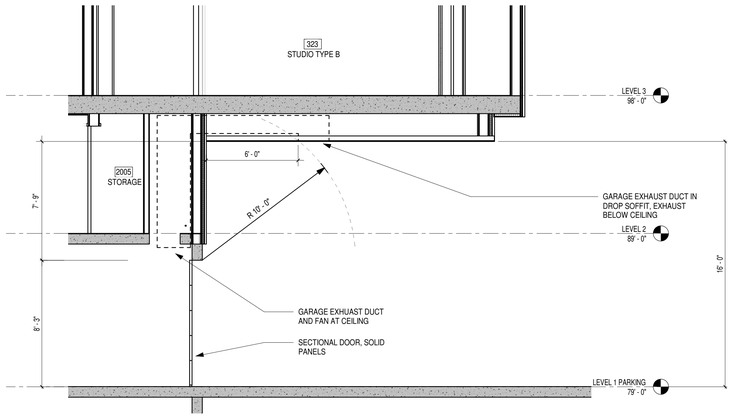

4 GARAGE EXHAUST

1/4" = 1'-0"

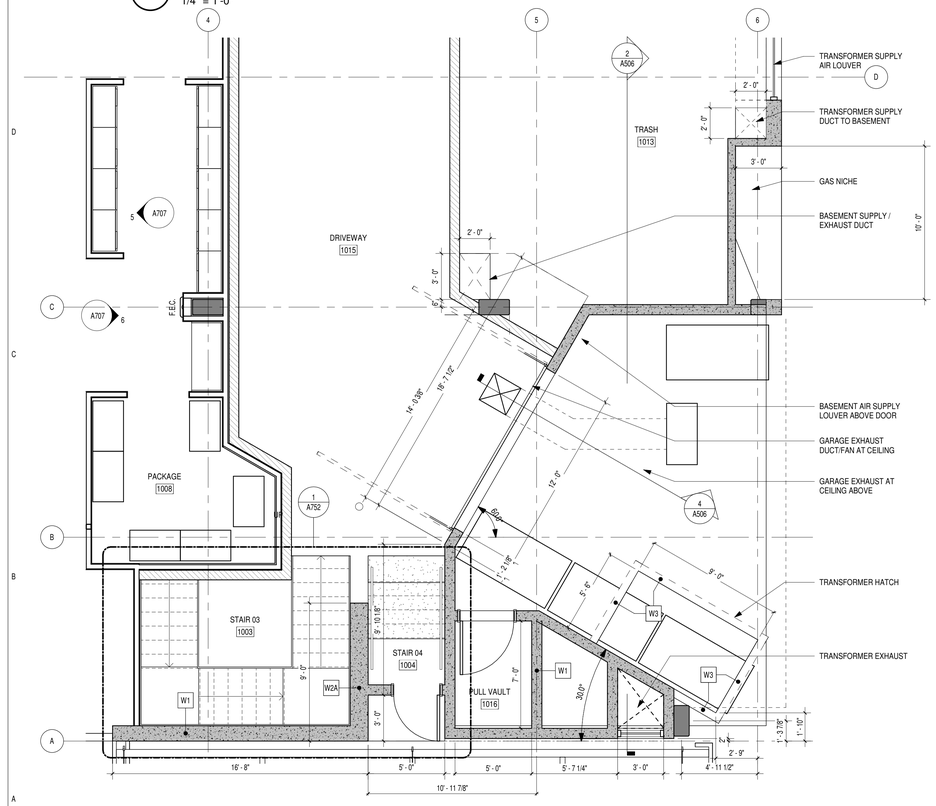

3 ENLARGED FLOOR PLAN - GARAGE ENTRY

1/4" = 1'-0"

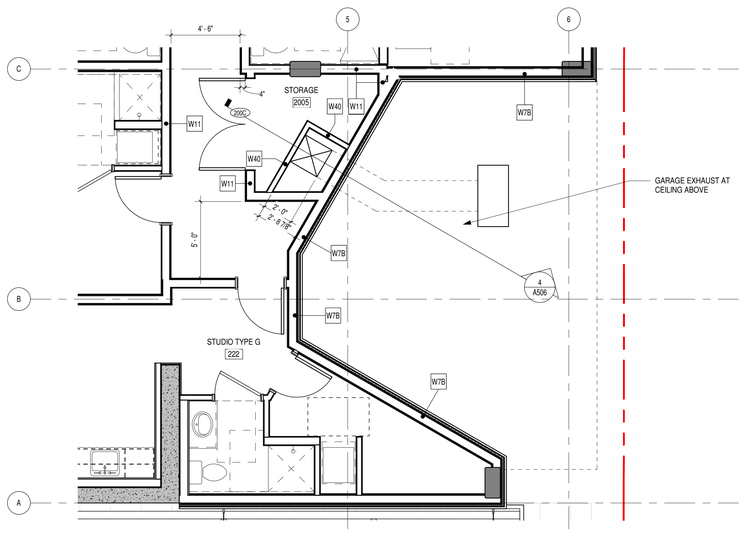

5 LEVEL 2 FLOOR PLAN

1/4" = 1'-0"

LINK

LINK DESIGN GROUP LLC.

439 Kirkland Way
Kirkland, WA. US. 98033
+1.425.298.0080

602 Pengjiang RD, E461 ShangHai, China 200072
上海市静安区彭江路602号E座461室 邮编 200072
+86.21.6667.0228

Project No: Enter Client Supplied Number
XXXXXXXXXX

Client/Owner/Project Address

Owner
VIBRANT CITIES
606 Maynard Ave S
Suite 251
Seattle, WA 98104

Consultant

BLOSSOM APARTMENTS - COA SUBMITTAL

-

Issue Drawing Log

	09/04/20	INITIAL PRICING SET
	01/21/21	PERMIT SET SUBMITTAL
	03/05/21	COA SUBMITTAL

Professional Certification - I certify that these documents were prepared or approved by me, and that i am a duly licensed Architect under the laws of the state of Washington, License number _____, Expiration date _____.

8628 REGISTERED ARCHITECT
JENNY LI
STATE OF WASHINGTON

SDCI APPROVAL STAMP

©LINK DESIGN GROUP LLC.
All rights reserved. No part of this document may be reproduced in any form or by any means without permission in writing from LINK DESIGN GROUP LLC.

PROJECT NUMBER	20-0108A
PROJECT MANAGER	JX
DRAWN BY	DS, MB

Sheet Identification

WALL SECTIONS & ENLARGED PLANS

A506

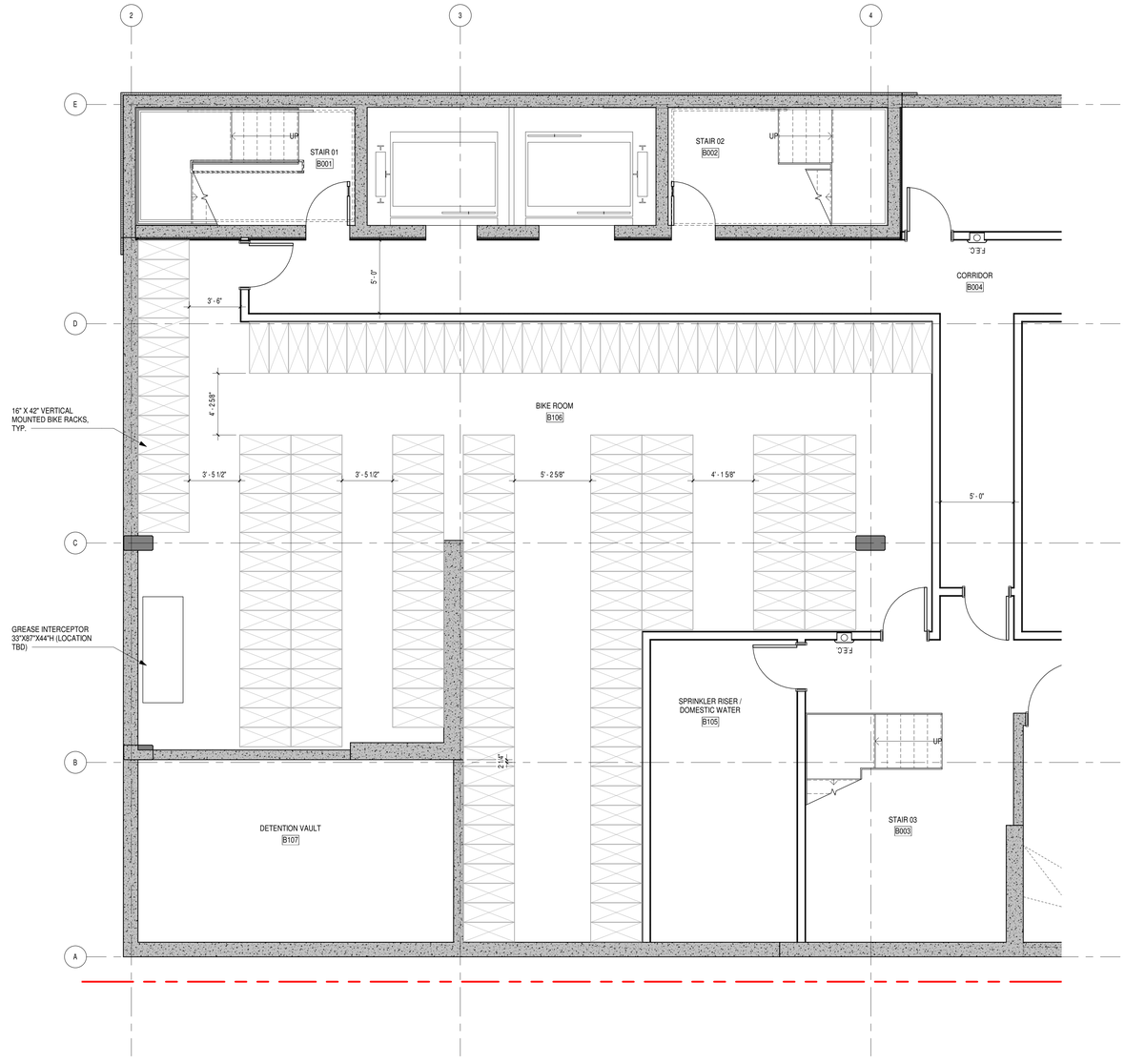

1 ENLARGED PLAN - BASEMENT LEVEL BIKE ROOM

1/4" = 1'-0"

LINK
LINK DESIGN GROUP LLC.
439 Kirkland Way
Kirkland, WA. US. 98033
+1.425.298.0080

602 Pengjiang RD, E461 ShangHai, China 200072
上海市静安区彭江路602号E座461室 邮编 200072
+86.21.6667.0228

Project No: Enter Client Supplied Number
XXXXXXXXXX

Client/Owner/Project Address

Owner
VIBRANT CITIES
606 Maynard Ave S
Suite 251
Seattle, WA 98104

Consultant

BLOSSOM APARTMENTS - COA SUBMITTAL

-

Issue Drawing Log

	09/04/20	INITIAL PRICING SET
	01/21/21	PERMIT SET SUBMITTAL
	03/05/21	COA SUBMITTAL

Professional Certification - I certify that these documents were prepared or approved by me, and that i am a duly licensed Architect under the laws of the state of Washington, License number _____, Expiration date _____.

8628 REGISTERED ARCHITECT
Jenny Li
JENNY LI
STATE OF WASHINGTON

SDCI APPROVAL STAMP

©LINK DESIGN GROUP LLC.
All rights reserved. No part of this document may be reproduced in any form or by any means without permission in writing from LINK DESIGN GROUP LLC.

PROJECT NUMBER	20-0108A
PROJECT MANAGER	JX
DRAWN BY	DS, MB

Sheet Identification

ENLARGED PLANS

A706

TYPE 1-A NON-COMBUSTIBLE EXTERIOR WALLS

W1

IBC
TABLE 721.1(2) / ITEM 4-1.1:

1 HOUR - 3½" MIN. THICKNESS
2 HOUR - 5" MIN THICKNESS
3 HOUR - 6¼" MIN THICKNESS

(SEE PLAN DIAGRAMS FOR REQUIRED WALL RATINGS)

PROVIDE INTEGRAL WATER PROOFING MEMBRANE IN CONCRETE.
(CONTINUOUS AT PT SLAB EDGES)

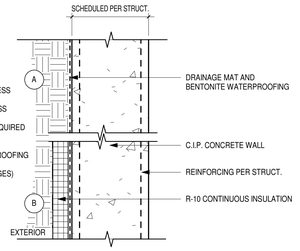

W2

IBC
TABLE 721.1(2) / ITEM 4-1.1:

1 HOUR - 3½" MIN. THICKNESS
2 HOUR - 5" MIN THICKNESS
3 HOUR - 6¼" MIN THICKNESS

(SEE PLAN DIAGRAMS FOR REQUIRED WALL RATINGS)

RIVERBANK ACOUSTICAL LAB; TL 76-77
STC-50 (8" THICK CONC.)

PROVIDE INTEGRAL WATER PROOFING MEMBRANE IN CONCRETE.
(CONTINUOUS AT PT SLAB EDGES)

PROVIDE PVA PRIMER ON INTERIOR SIDE OF GWB FOR VAPOR RETARDER.

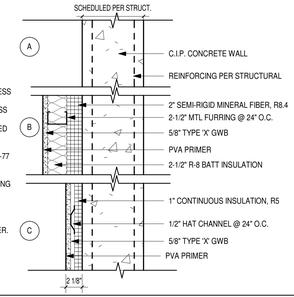

W3

IBC
TABLE 721.1(2) / ITEM 4-1.1:

1 HOUR - 3½" MIN. THICKNESS
2 HOUR - 5" MIN THICKNESS
3 HOUR - 6¼" MIN THICKNESS

(SEE PLAN DIAGRAMS FOR REQUIRED WALL RATINGS)

(SEE PLAN DIAGRAMS FOR REQUIRED WALL RATINGS)

RIVERBANK ACOUSTICAL LAB; TL 76-77
STC-50 (8" THICK CONC.)

PROVIDE INTEGRAL WATER PROOFING MEMBRANE IN CONCRETE.
(CONTINUOUS AT PT SLAB EDGES)

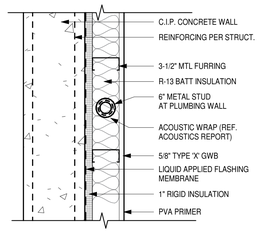

GA FILE NO. WP 1350 - GENERIC - 1HR - STC 35 - 39

ONE LAYER 5/8" TYPE X GYPSUM WALLBOARD OR GYPSUM VENEER BASE APPLIED PARALLEL OR AT RIGHT ANGLES TO EACH SIDE OF 3-5/8" STEEL STUDS 24" O.C. WITH 1" TYPE S DRYWALL SCREWS 8" O.C. AT VERTICAL JOINTS AND 12" O.C. AT FLOOR AND CEILING RUNNERS AND INTERMEDIATE STUDS.

JOINTS STAGGERED 24" ON OPPOSITE SIDES. (NLB)

GA FILE NO. WP 1522 - GENERIC - 1HR - STC 55 - 59

BASE LAYER 5/8" GYPSUM WALLBOARD OR GYPSUM VENEER BASE APPLIED PARALLEL OR AT RIGHT ANGLES TO EACH SIDE OF 3-5/8" STEEL STUDS 24" O.C. WITH 1" TYPE S DRYWALL SCREWS 24" O.C.
FACE LAYER 5/8" TYPE X GYPSUM WALLBOARD OR GYPSUM VENEER BASE APPLIED PARALLEL OR AT RIGHT ANGLES TO EACH SIDE WITH 1-5/8" TYPE S DRYWALL SCREWS 12" O.C.

JOINTS STAGGERED 24" EACH LAYER AND SIDE. SOUND TESTED WITH 3-1/2" GLASS FIBER FRICTION FIT IN STUD SPACE. (NLB)

GA FILE NO. WP 8205 - PROPIETARY - 2HR

EXTERIOR SIDE: BASE LAYER 5/8" PROPRIETARY TYPE X GYPSUM SHEATHING APPLIED PARALLEL TO 3 5/8" 20 GAGE STEEL STUDS 16" O.C. WITH 1" TYPE S-12 DRYWALL SCREWS 24" O.C. FACE LAYER 5/8" PROPRIETARY TYPE X GYPSUM SHEATHING APPLIED PARALLEL TO FRAMING WITH 15/8" TYPE S-12 DRYWALL SCREWS 12" O.C. OR 1/2" PROPRIETARY CEMENTITIOUS BACKER UNIT APPLIED PARALLEL OR AT RIGHT ANGLES TO FRAMING WITH 15/8" TYPE S-12 WAFER HEAD SCREWS 8" O.C.

INTERIOR SIDE: BASE LAYER 1/2" PROPRIETARY TYPE X GYPSUM WALLBOARD OR GYPSUM VENEER BASE APPLIED PARALLEL TO FRAMING WITH 1" TYPE S-12 DRYWALL SCREWS 24" O.C. FACE LAYER 1/2" PROPRIETARY CEMENTITIOUS BACKER UNIT APPLIED PARALLEL OR AT RIGHT ANGLES TO FRAMING WITH 15/8" TYPE S-12 WAFER HEAD SCREWS 8" O.C. JOINTS FINISHED. 3" MINERAL FIBER FRICTION FIT IN STUD SPACE.

JOINTS STAGGERED EACH LAYER AND SIDE. WEATHER RESISTIVE BARRIER MUST BE INSTALLED BEHIND THE CEMENTITIOUS BACKER UNIT ON THE EXTERIOR SIDE. (NLB)

W5

GA FILE NO. WP 1350
NON-RATED
STC RATING 35-39

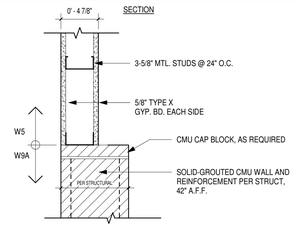

W6

GA FILE NO. WP 1522
2 HOUR FIRE RATING
STC RATING 55-59

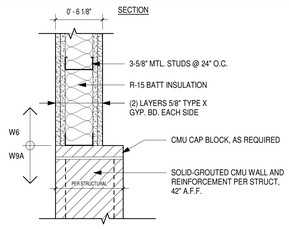

W6A

GA FILE NO. WP 1522
2 HOUR FIRE RATING
STC RATING 55-59

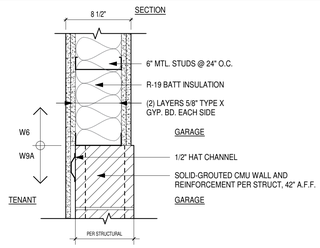

W7A

GA FILE NO.WP 8205

2 HOUR FIRE RATING (NLB)

PROVIDE PVA PRIMER ON INTERIOR SIDE OF GWB FOR VAPOR RETARDER.

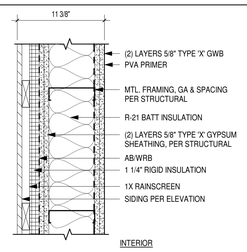

W7B

GA FILE NO.WP 8205

2 HOUR FIRE RATING (NLB)

PROVIDE PVA PRIMER ON INTERIOR SIDE OF GWB FOR VAPOR RETARDER.

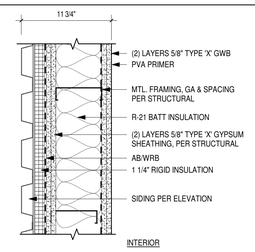

W9

3 HR RATED

PROVIDE PVA PRIMER ON INTERIOR SIDE OF GWB FOR VAPOR RETARDER.

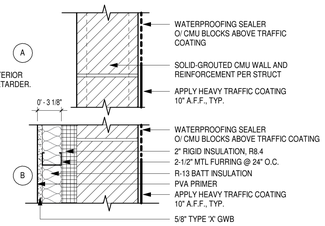

TYPE 1-A INTERIOR WALLS

W11

1 HOUR FIRE RATING
STC RATING 61

CORRIDOR WALL

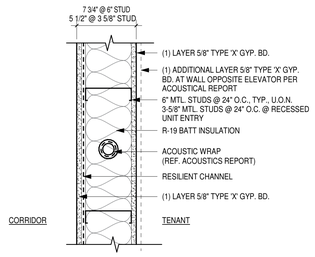

W12

1 HOUR FIRE RATING
STC RATING 61

PARTY WALL

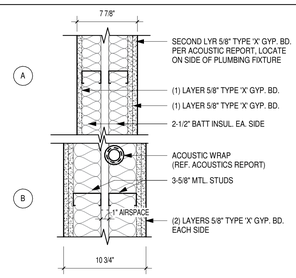

W13

1 HOUR FIRE RATING
STC RATING 61

PARTY WALL

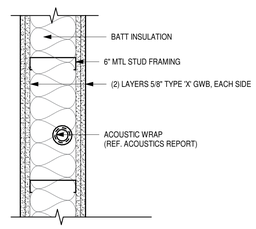

TYPE 14

GA FILE NO. WP 1522
2 HOUR FIRE RATING
STC RATING 55-59

STAIR WALL

PROVIDE PVA PRIMER ON INTERIOR SIDE OF GWB FOR VAPOR RETARDER. ONLY AT GARAGE.

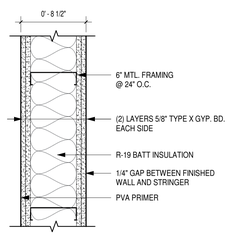

W16

NON-RATED PARTITION

INTERIOR UNIT WALL

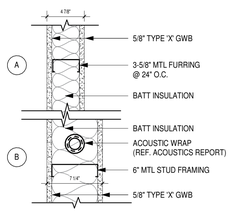

W19

NON-RATED PARTITION

FURRED WALL

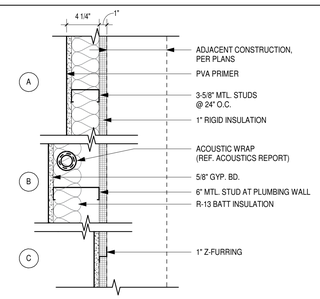

W20

NON-RATED PARTITION

FURRED WALL

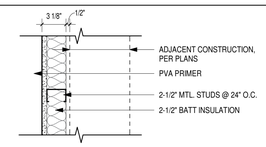

LINK
LINK DESIGN GROUP LLC.
439 Kirkland Way
Kirkland, WA. US. 98033
+1.425.298.0080

602 Pengjiang RD, E461 ShangHai, China 200072
上海市静安区彭江路602号E座461室 邮编 200072
+86.21.6667.0228

Project No: Enter Client Supplied Number
XXXXXXXXXX

Client/Owner/Project Address

Owner
VIBRANT CITIES
606 Maynard Ave S
Suite 251
Seattle, WA 98104

Consultant

BLOSSOM APARTMENTS - COA SUBMITTAL

Issue Drawing Log

	09/04/20	INITIAL PRICING SET
	01/21/21	PERMIT SET SUBMITTAL
	03/05/21	COA SUBMITTAL

Professional Certification - I certify that these documents were prepared or approved by me, and that i am a duly licensed Architect under the laws of the state of Washington, License number _____, Expiration date _____.

8628 REGISTERED ARCHITECT
Jenny Li
JENNY LI
STATE OF WASHINGTON

SDCI APPROVAL STAMP

©LINK DESIGN GROUP LLC.
All rights reserved. No part of this document may be reproduced in any form or by any means without permission in writing from LINK DESIGN GROUP LLC.

PROJECT NUMBER	20-0108A
PROJECT MANAGER	JX
DRAWN BY	DS, MB

Sheet Identification

WALL TYPES

A804

TYPE 1-A INTERIOR WALLS (CONT.)

GA FILE NO. WP 3371 - GENERIC - 1HR - STC 45 TO 49

ONE LAYER 5/8" TYPE X GYPSUM WALLBOARD OR GYPSUM VENEER BASE APPLIED PARALLEL OR AT RIGHT ANGLES TO EACH SIDE OF 2 X 4 WOOD STUDS 16" O.C. STAGGERED 8" O.C. ON 2 X 6 WOOD PLATES WITH 6D COATED NAILS, 17/8" LONG, 0.0915" SHANK, 1/4" HEADS, 7" O.C. MINIMUM 3-1/2" GLASS FIBER BATTS, 0.80PCF, WOVEN IN CAVITY.

JOINTS STAGGERED 24" ON OPPOSITE SIDES. HORIZONTAL BRACING REQUIRED AT MID-HEIGHT. (LOADBEARING)

GA FILE NO. WP 3910 - GENERIC - 2HR - STC 50 - 54

ONE LAYER 5/8" TYPE X GYPSUM WALLBOARD APPLIED AT RIGHT ANGLES TO EACH SIDE OF 2 X 6 WOOD STUDS 16" O.C. WITH 21/4" TYPE S OR W DRYWALL SCREWS 12" O.C. 51/2" MINERAL FIBER INSULATION, NOMINAL 2.5 PCF, FRICTION FIT IN STUD SPACE.

VERTICAL JOINTS STAGGERED 16" O.C., HORIZONTAL JOINTS STAGGERED 24" O.C., ON OPPOSITE SIDES.

TESTED AT 5,156 LBS PER STUD OR 100 PERCENT OF DESIGN LOAD. (LOAD-BEARING)

TYPE III-A WOOD FRAMED EXTERIOR WALLS

W26

1 HOUR FIRE RATING (NLB)

* SECOND LAYER OF 5/8" TYPE X PER ACOUSTIC REPORT.

PROVIDE PVA PRIMER ON INTERIOR SIDE OF GWB FOR VAPOR RETARDER.

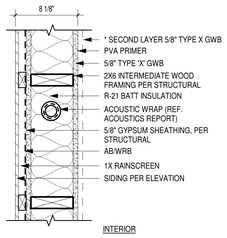

W28

GA FILE NO. WP 4230
2 HOUR FIRE RATING (NLB)

PROVIDE PVA PRIMER ON INTERIOR SIDE OF GWB FOR VAPOR RETARDER.

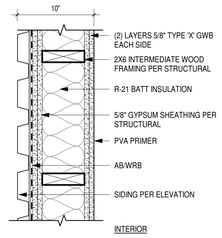

W28B

GA FILE NO. WP 4230
2 HOUR FIRE RATING (NLB)

PROVIDE PVA PRIMER ON INTERIOR SIDE OF GWB FOR VAPOR RETARDER.

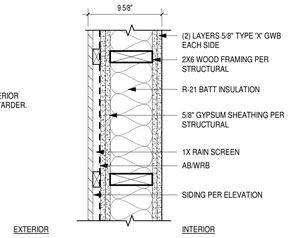

GA FILE NO. WP 4230 - GENERIC - 2HR

BASE LAYER 5/8" TYPE X GYPSUM WALLBOARD APPLIED AT RIGHT ANGLES TO EACH SIDE OF 2 X 6 WOOD STUDS 24" O.C. WITH 21/4" TYPE S OR W DRYWALL SCREWS 24" O.C. FACE LAYER 5/8" TYPE X GYPSUM WALLBOARD APPLIED AT RIGHT ANGLES TO EACH SIDE WITH 21/4" TYPE S DRYWALL SCREWS 8" O.C. 51/2" MINERAL FIBER INSULATION, NOMINAL 3 PCF, FRICTION FIT IN STUD SPACE.

JOINTS STAGGERED 24" EACH LAYER AND SIDE. TESTED AT 5,506 LBS PER STUD OR 100 PERCENT OF DESIGN LOAD. (LOAD-BEARING)

GA FILE NO. WP5520 - GENERIC - 2HR - STC 55-59

BASE LAYER 5/8" TYPE X GYPSUM WALLBOARD OR GYPSUM VENEER BASE APPLIED AT RIGHT ANGLES TO EACH SIDE OF DOUBLE ROW OF 2 X 4 WOOD STUDS 16" O.C. ON SEPARATE PLATES 1" APART WITH 6D COATED NAILS, 17/8" LONG, 0.085" SHANK, 1/4" HEADS, 24" O.C. FACE LAYER 5/8" TYPE X GYPSUM WALLBOARD OR GYPSUM VENEER BASE APPLIED AT RIGHT ANGLES TO EACH SIDE WITH 8D COATED NAILS, 23/8" LONG, 0.100" SHANK, 1/4" HEADS, 8" O.C.

JOINTS STAGGERED 16" EACH LAYER AND SIDE. SOUND TESTED WITH 31/2" GLASS FIBER INSULATION STAPLED TO STUDS IN STUD SPACES ON ONE SIDE AND WITH NAILS FOR BASE LAYER SPACED 6" O.C. HORIZONTAL BRACING REQUIRED AT MID-HEIGHT. (LOAD-BEARING)

TYPE III-A WOOD FRAMED INTERIOR WALLS

W31

GA FILE NO. WP 3371
1 HOUR FIRE RATING
STC RATING 45-49

CORRIDOR WALL

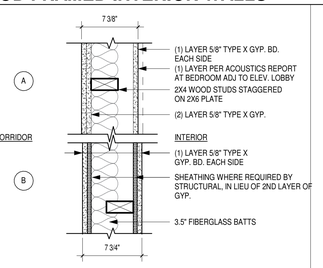

W32

GA FILE NO. WP 5520
2 HOUR FIRE RATING
STC RATING 55-59

CORRIDOR WALL

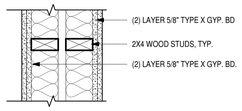

W33

1 HOUR FIRE RATING
STC RATING 62

PARTY WALL

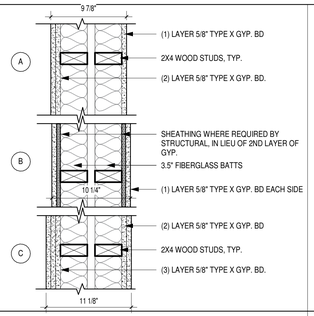

W34

GA FILE NO. WP 4230
2 HOUR FIRE RATING

STAIR WALL

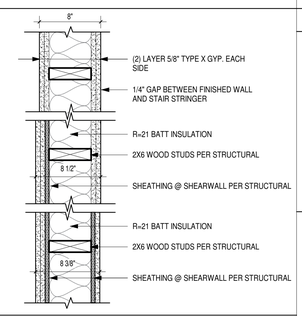

W35

GA FILE NO. WP 3910
2 HOUR FIRE RATING
STC RATING 50-54

STAIR WALL AND TRASH ROOM ADJACENT TO DWELLING UNIT

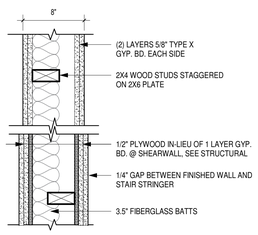

W36

NON-RATED
STC RATING 30-34

INTERIOR UNIT WALL

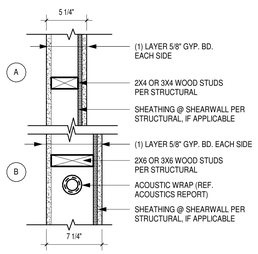

W36S

NON-RATED
STC RATING 30-34

INTERIOR UNIT WALL

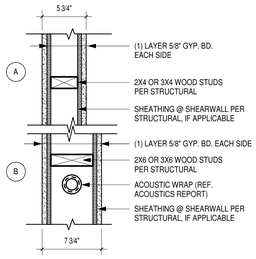

W37

NON-RATED
STC RATING 30-34

INTERIOR UNIT WALL @WASHER / DRYER

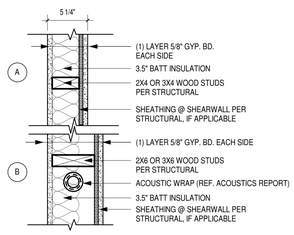

GA FILE NO. WP 7058 - PROPRIETARY - 2HR - STC 50-54

ONE LAYER 1" X 24" PROPRIETARY TYPE X GYPSUM PANELS INSERTED BETWEEN 21/2" FLOOR AND CEILING RUNNERS WITH TAB-FLANGE SECTION OF 21/2" STEEL I, C-H, OR C-T STUDS BETWEEN PANELS.

OPPOSITE SIDE: BASE LAYER 5/8" PROPRIETARY TYPE X GYPSUM WALLBOARD OR GYPSUM VENEER BASE APPLIED PARALLEL OR AT RIGHT ANGLES TO STUDS WITH 1" TYPE S DRYWALL SCREWS 24" O.C. FACE LAYER 5/8" PROPRIETARY TYPE X GYPSUM WALLBOARD OR GYPSUM VENEER BASE APPLIED AT RIGHT ANGLES TO BASE LAYER WITH 15/8" TYPE S DRYWALL SCREWS 12" O.C. (NLB)

SOUND TESTED WITH RESILIENT CHANNELS 24" O.C. ON DOUBLE LAYER SIDE AND 11/2" GLASS FIBER FRICTION FIT IN STUD CAVITY.

SHAFTWALL

W41

GA FILE NO. WP 7058
2 HOUR FIRE RATING
STC RATING 50-54

MECHANICAL SHAFT

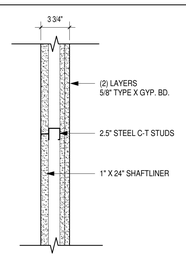

W42

GA FILE NO. WP 7058
2 HOUR FIRE RATING
STC RATING 50-54

ELEVATOR SHAFT

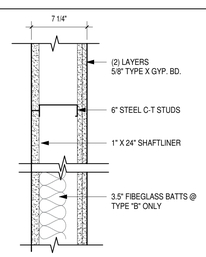

TYPE 43

GA FILE NO. WP 4230
2 HOUR FIRE RATING

ELEVATOR SHEAR WALL

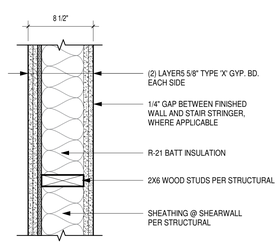

LINK
LINK DESIGN GROUP LLC.
439 Kirkland Way
Kirkland, WA. US. 98033
+1.425.298.0080

602 Pengjiang RD, E461 ShangHai, China 200072
上海市静安区彭江路602号E座461室 邮编 200072
+86.21.6667.0228

Project No: Enter Client Supplied Number
XXXXXXXXXX

Client/Owner/Project Address

Owner
VIBRANT CITIES
606 Maynard Ave S
Suite 251
Seattle, WA 98104

Consultant

BLOSSOM APARTMENTS - COA SUBMITTAL

Issue Drawing Log

	09/04/20	INITIAL PRICING SET
	01/21/21	PERMIT SET SUBMITTAL
	03/05/21	COA SUBMITTAL

Professional Certification - I certify that these documents were prepared or approved by me, and that I am a duly licensed Architect under the laws of the state of Washington, License number _____, Expiration date _____.

SDCI APPROVAL STAMP

©LINK DESIGN GROUP LLC.
All rights reserved. No part of this document may be reproduced in any form or by any means without permission in writing from LINK DESIGN GROUP LLC.

PROJECT NUMBER	20-0108A
PROJECT MANAGER	JX
DRAWN BY	DS, MB

Sheet Identification

WALL TYPES

A805

FC1

3 HOUR FIRE RATED
IBC TABLE 721.2.2.1

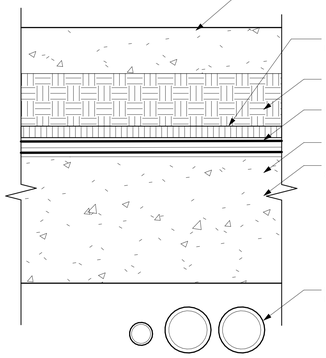

FC2

3 HOUR FIRE RATED
IBC TABLE 721.2.2.1

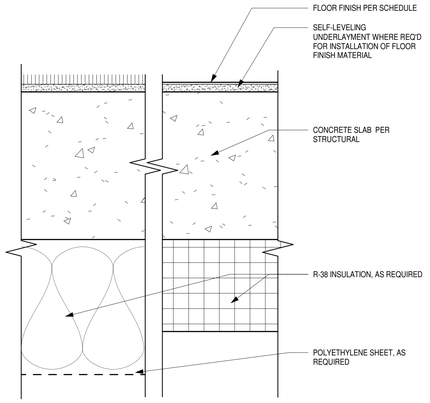

FC3

GA FILE NO. RC 5529
1 HOUR FIRE RATING

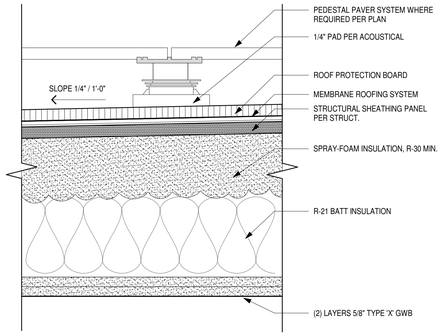

FC4

1 HOUR FIRE RATED
NER-200 / ASSEM. "B",
STC-58, IIC 50-MIN

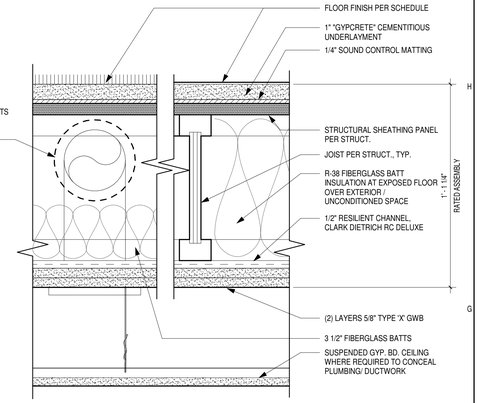

FC4.1

1 HOUR FIRE RATED
NER-200 / ASSEM. "B",
STC-58, IIC 50-MIN

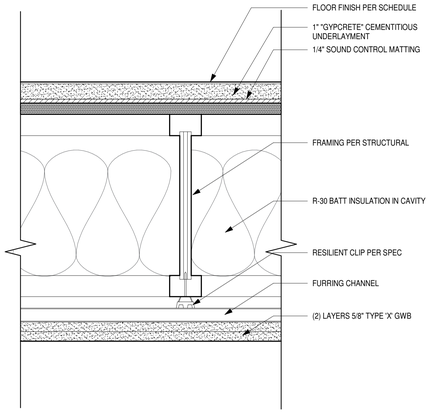

FC5

1 HOUR FIRE RATED
NER-200 / ASSEM. "B",
STC-58, IIC 50-MIN

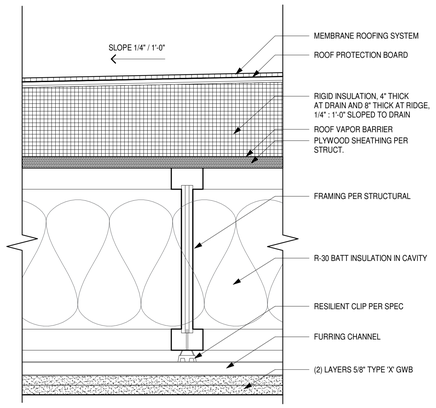

FC6

1 HOUR FIRE RATED
NER-200 / ASSEM. "B",
STC-58, IIC 50-MIN

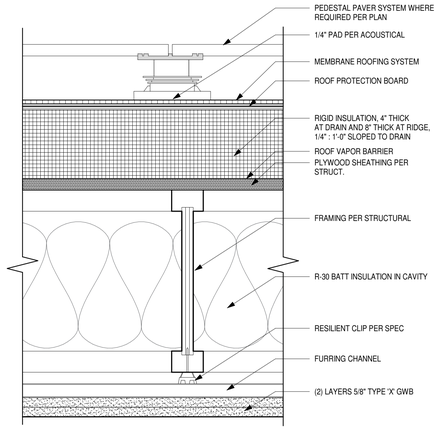

FC8

3 HOUR FIRE RATED
IBC TABLE 721.2.2.1

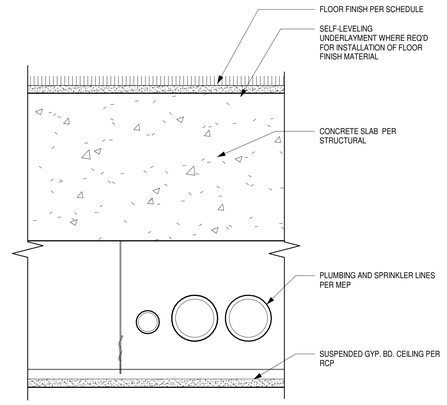

FC9

2 HOUR FIRE RATED
IBC TABLE 721.2.2.1

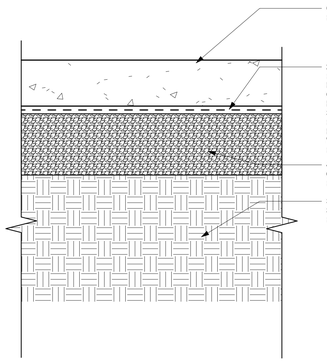

FC10

GA FILE NO. RC 5529
1 HOUR FIRE RATING

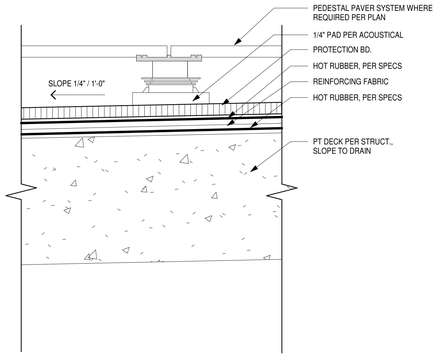

FC11

3 HOUR FIRE RATED
IBC TABLE 721.2.2.1

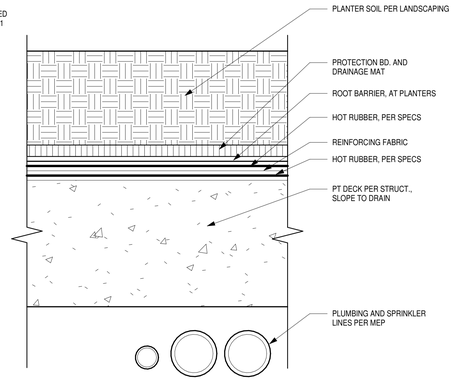

FC12

GA FILE NO. RC 5529
1 HOUR FIRE RATING

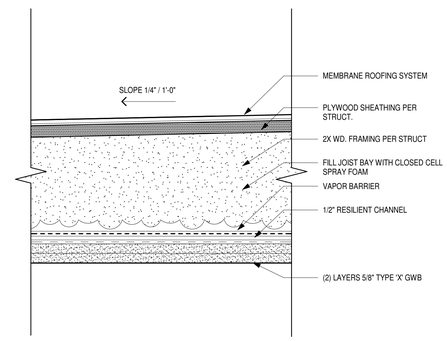

FC13

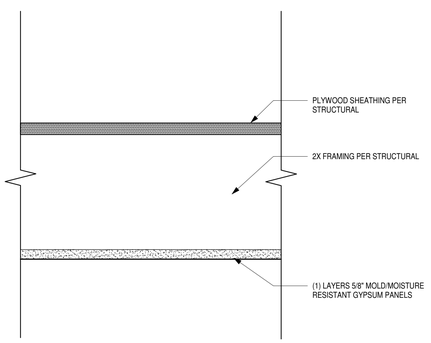

LINK
LINK DESIGN GROUP LLC.
439 Kirkland Way
Kirkland, WA. US. 98033
+1.425.298.0080

602 Pengjiang RD, E461 ShangHai, China 200072
上海市鹏江区鹏江路602号E座461室 邮编 200072
+86.21.6667.0228

Project No: Enter Client Supplied Number
XXXXXXXXXX

Client/Owner/Project Address

Owner
VIBRANT CITIES
606 Maynard Ave S
Suite 251
Seattle, WA 98104

Consultant

BLOSSOM APARTMENTS - COA SUBMITTAL

-

Issue Drawing Log

	09/04/20	INITIAL PRICING SET
	01/21/21	PERMIT SET SUBMITTAL
	03/05/21	COA SUBMITTAL

Professional Certification - I certify that these documents were prepared or approved by me, and that i am a duly licensed Architect under the laws of the state of Washington, License number _____, Expiration date _____.

8628 REGISTERED ARCHITECT
JENNY LI
STATE OF WASHINGTON

SDCI APPROVAL STAMP

©LINK DESIGN GROUP LLC.
All rights reserved. No part of this document may be reproduced in any form or by any means without permission in writing from LINK DESIGN GROUP LLC.

PROJECT NUMBER	20-0108A
PROJECT MANAGER	JX
DRAWN BY	DS, MB

Sheet Identification

FLOOR-CEILING TYPES

A806

WINDOW NOTES

1. ALL WINDOWS ARE VINYL, U.N.O. TYPICAL.

VINYL WINDOWS: AVERAGE U-VALUE =0.269, AVERAGE SHGC =0.23
STOREFRONT WINDOWS: AVERAGE U-VALUE =0.36, AVERAGE SHGC=0.33

2. ALL WINDOWS SHOWN FROM EXTERIOR.

3. CASEMENT WINDOWS TO MEET THE REQUIREMENTS FOR EMERGENCY ESCAPE & RESCUE OPENINGS (IBC 1029). SEE SHEET CS-4 FOR REQUIREMENTS & COMPLIANCE.

4. CONTRACTOR TO VERIFY ROUGH OPENING DIMENSIONS IN FIELD BEFORE ORDERING WINDOWS.

5. T = TEMPERED GLASS LITE.

6. IBC 2403.1: EACH PANE SHALL BEAR THE MANUFACTURER'S MARK DESIGNATING THE TYPE AND THICKNESS OF THE GLASS OR GLAZING MATERIAL. EACH PANE OF TEMPERED GLASS, EXCEPT TEMPERED SPANDREL GLASS, SHALL BE PERMANENTLY IDENTIFIED BY THE MANUFACTURER. THE IDENTIFICATION MARK SHALL BE ACID ETCHED, SAND BLASTED, CERAMIC FIRED, LASER ETCHED, EMBOSSED OR OF A TYPE THAT, ONCE APPLIED, CANNOT BE REMOVED WITHOUT BEING DESTROYED. TEMPERED SPANDREL GLASS SHALL BE PROVIDED WITH A REMOVABLE PAPER MARKING BY THE MANUFACTURER.

7. IBC 2406.3: EACH PANE OF SAFETY GLAZING INSTALLED IN HAZARDOUS LOCATIONS SHALL BE IDENTIFIED BY A MANUFACTURER'S DESIGNATION SPECIFYING WHO APPLIED THE DESIGNATION, THE MANUFACTURER OR INSTALLER AND THE SAFETY GLAZING STANDARD WITH WHICH IT COMPLIES, AS WELL AS THE INFORMATION SPECIFIED IN SECTION 2403.1. THE DESIGNATION SHALL BE ACID ETCHED, SAND BLASTED, CERAMIC FIRED, LASER ETCHED, EMBOSSED OR OF A TYPE THAT ONCE APPLIED, CANNOT BE REMOVED WITHOUT BEING DESTROYED.

8. IBC 2403.4: WHERE INTERIOR GLAZING IS INSTALLED ADJACENT TO A WALKING SURFACE, THE DIFFERENTIAL DEFLECTION OF TWO ADJACENT UNSUPPORTED EDGES SHALL NOT BE GREATER THAN THE THICKNESS OF THE PANELS WHEN A FORCE OF 50 POUNDS PER LINEAR FOOT IS APPLIED HORIZONTALLY TO ONE PANEL AT ANY POINT UP TO 42 INCHES ABOVE THE WALKING SURFACE.

ALL WINDOWS AND DOORS TO MEET REQUIREMENTS OF THE 2012 WASHINGTON STATE ENERGY CODE.

9. WINDOW ACCESSIBILITY IN TYPE "A" UNITS (ICC/ANSI A117.1-2009 SECTION 1003.13):
IN TYPE 'A' UNITS, OPERABLE WINDOWS REQUIRED TO PROVIDE NATURAL VENTILATION SHALL COMPLY WITH SECTIONS 309.2 AND 309.3.
OPERABLE WINDOWS REQUIRED TO PROVIDE AN EMERGENCY ESCAPE AND RESCUE OPENING SHALL COMPLY WITH SECTION 309.2
OPERABLE WINDOWS SHALL COMPLY WITH SECTION 309 AS FOLLOWS:
2. A 30" X 48" CLEAR FLOOR SPACE SHALL BE PROVIDED PER SECTION 305. SEE SHEET CS-8.
3. OPERABLE PARTS MUST BE IN THE REACH RANGE PER SECTION 308. SEE DIAGRAM ON SHEET CS-9.
4. OPERABLE PARTS SHALL BE OPERABLE WITH ONE HAND AND SHALL NOT REQUIRE TIGHT GRASPING, PINCHING, OR TWISTING OF THE WRIST. THE FORCE REQUIRED TO ACTIVATE OPERABLE PARTS SHALL BE 5.0 POUNDS MAX.

12. ALL WINDOWS WHOSE OPERABLE PARTS FALL BELOW 36" ABOVE FINISHED FLOOR SURFACE SHALL BE EQUIPPED WITH HARDWARE RESTRICTING THE OPENING TO A DIMENSION OF 4" AT ITS WIDEST POINT, IN COMPLIANCE WITH IBC 1013.8 EXCEPTION 2.

13. PER ANSI A117.1 - 2009, CHANGE IN LEVEL BETWEEN 1/4" AND 1/2" HIGH MAX SHALL BE BEVELED WITH A SLOPE NOT STEEPER THAN 1:2

SAFETY GLAZING

IDENTIFICATION OF SAFETY GLAZING - IBC 2403.1
EACH PANE OF SAFETY GLAZING INSTALLED IN HAZARDOUS LOCATIONS SHALL BE IDENTIFIED BY A MANUFACTURER'S DESIGNATION SPECIFYING WHO APPLIED THE DESIGNATION, THE MANUFACTURER OR INSTALLER AND THE SAFETY GLAZING STANDARD WITH WHICH IT COMPLIES. THE DESIGNATION SHALL BE ACID ETCHED, SAND BLASTED, CERAMIC FIRED, LASER ETCHED, EMBOSSED OR OF A TYPE THAT ONCE APPLIED, CANNOT BE REMOVED WITHOUT BEING DESTROYED.

HAZARDOUS LOCATIONS - IBC 2406.4:
THE FOLLOWING SHALL BE CONSIDERED HAZARDOUS LOCATIONS REQUIRING SAFETY GLAZING MATERIALS:
· GLAZING IN SWINGING DOORS
· GLAZING IN FIXED AND SLIDING PANELS OF SLIDING DOOR ASSEMBLIES
· GLAZING IN AN INDIVIDUAL FIXED OR OPERABLE PANEL ADJACENT TO A DOOR WHERE THE NEAREST
EXPOSED EDGE OF THE GLAZING IS WITHIN A 24" ARC OF EITHER VERTICAL EDGE OF THE DOOR IN A CLOSED POSITION & WHERE THE BOTTOM EDGE OF THE GLAZING IS < 60" ABOVE THE WALKING SURFACE.
· GLAZING IN A FIXED OR OPERABLE PANEL THAT MEETS THE FOLLOWING CONDITIONS:
A. EXPOSED AREA OF PANE IS > 9 SF
B. EXPOSED BOTTOM EDGE IS < 18" ABOVE THE FLOOR
C. EXPOSED TOP EDGE IS > 36" ABOVE THE FLOOR
D. ONE OR MORE WALKING SURFACES WITHIN 36" HORIZONTALLY OF THE PLANE OF THE GLAZING.
· GLAZING ADJACENT TO STAIRWAYS, LANDINGS & RAMPS WITHIN 36" HORIZONTALLY OF A WALKING SURFACE; WHEN THE EXPOSED SURFACE OF GLASS IS LESS THAN 60" ABOVE THE PLANE OF THE ADJACENT WALKING SURFAC

VENTILATION NOTES

EVERY OCCUPIED SPACE SHALL BE VENTILATED BY NATURAL OR MECHANICAL MEANS IN ACCORDANCE WITH SECTIONS 402 AND/OR 403 OF THE IMC.

· EACH DWELLING UNIT OR SLEEPING UNIT SHALL BE EQUIPPED WITH LOCAL EXHAUST AND WHOLE HOSE VENTILATION SYSTEMS AND SHALL COMPLY WITH SECTIONS 403.8.1 THROUGH 403.8.11. ALL OCCUPIED SPACES, INCLUDING PUBLIC CORRIDORS, OTHER THAN THE GROUP R DWELLING AND SLEEPING UNIT, THAT SUPPORT THE GROUP R OCCUPANCY SHALL MEET THE VENTILATION REQUIREMENTS OF SECTION 402 OR SECTIONS 403.1 TO 403.7.

· TYPICAL WHOLE HOUSE FANS TO BE LOCATED IN BATHROOMS AND AND LAUNDRY CLOSETS (WHEN SEPARATE FROM THE BATHROOM).

· ALL EXTERIOR VINYL WINDOWS AT OCCUPIED SPACES SHALL BE INSTALLED WITH TRICKLE VENTS TO PROVIDE NATURAL VENTILATION. THE OPERATING MECHANISM SHALL BE LOCATED WITH READY ACCESS SO THAT THEY ARE READILY CONTROLLABLE BY THE OCCUPANTS

VINYL WINDOWS

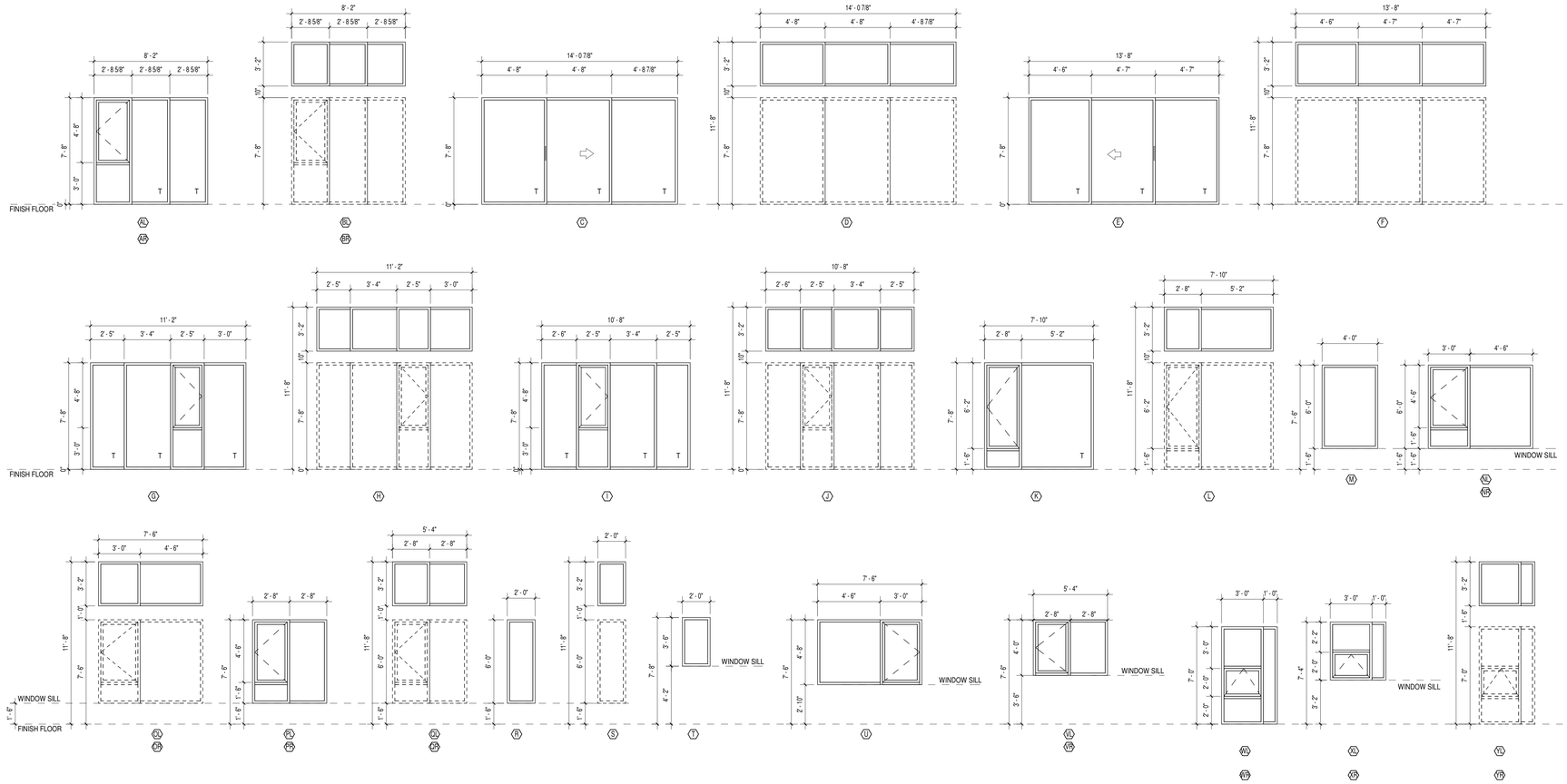

NATURAL DAYLIGHT AND VENTILATION CALCULATIONS

UNIT TYPE	OCCUPIABLE SF	ROOM #s	WINDOWS	NAT'L VENTILATION FACTOR	SF VENTILATION REQ'D	SF VENTILATION PROVIDED	NAT'L DAYLIGHT FACTOR	SF DAYLIGHT REQ'D	SF DAYLIGHT PROVIDED
STUDIO TYPE A	243	209, 309, 409, 509, 609, 709, 807	IR, XX	0.04	9.72	10.75	0.08	19.44	45
STUDIO TYPE A sim1	224	318		0.04	8.96	11.56	0.08	17.92	45
STUDIO TYPE B	244	205, 206,207, 208, 305, 306, 307, 308, 323, 405, 406, 407, 408, 418, 419, 420, 421, 423, 505, 506, 507, 508, 518, 519, 520, 521, 523, 605, 606, 607, 608, 618, 619, 620, 621, 623, 705, 706, 707, 708, 718, 719, 720, 721, 723, 803, 805, 817, 818, 819, 821		0.04	9.76	10.75	0.08	19.52	45
STUDIO TYPE B sim1	229	223, 311, 312, 315, 316, 326, 411, 412, 415, 416, 426, 511, 512, 515, 516, 526, 611, 612, 615, 616, 626, 711, 712, 715, 716, 726, 809, 810, 813, 814, 817, 818, 824		0.04	9.16	10.11	0.08	18.32	32
	229	211, 212, 215, 216		0.04	9.16	5.33 with mechanical vent	0.08	18.32	28
STUDIO TYPE B sim2	276	204, 304, 404, 504, 604, 704		0.04	11.04	10.75 with mechanical vent	0.08	22.08	62.6
STUDIO TYPE B sim3	223	219, 220, 319, 320, 321		0.04	8.92	11.56	0.08	17.84	45
STUDIO TYPE C	263	213, 313, 314, 413, 513,514, 613, 713, 714, 811		0.04	10.52	10.11 with mechanical vent	0.08	21.04	32
	263	213		0.04	10.52	5.33 with mechanical vent	0.08	21.04	28
STUDIO TYPE C sim1	256	327, 527, 727		0.04	10.24	10.11 with mechanical vent	0.08	20.48	32
STUDIO TYPE D	248	201, 301, 401, 501, 601, 701, 801		0.04	9.92	10.11	0.08	19.84	32
STUDIO TYPE E	263	203, 303, 403, 503, 603, 703		0.04	10.52	21.5	0.08	21.04	125.2
STUDIO TYPE E sim1	249	325, 425, 525, 625, 725, 823		0.04	9.96	21.5	0.08	19.92	125.2
STUDIO TYPE F	247	202, 302, 402, 502, 602, 702, 802		0.04	9.88	10.75	0.08	19.76	74.6
STUDIO TYPE F sim1	262	324, 424, 524, 624, 724, 822		0.04	10.48	10.75	0.08	20.96	86.6
STUDIO TYPE G	224	222		0.04	8.96	11.56	0.08	17.92	64
STUDIO TYPE H	228	310, 317, 410, 417, 510, 517, 610, 617, 710, 717, 808, 815		0.04	9.12	10.11	0.08	18.24	32
	228	210		0.04	9.12	5.33 with mechanical vent	0.08	18.24	28
STUDIO TYPE L	229	414, 614, 812		0.04	9.16	10.11	0.08	18.32	32
	229	214		0.04	9.16	5.33 with mechanical vent	0.08	18.32	28
STUDIO TYPE M	214	224, 427, 627, 825		0.04	8.56	10.11	0.08	17.12	32
ONE BEDROOM J	324	322, 522, 820		0.04	12.96	11.56 with mechanical vent	0.08	25.92	45
ONE BEDROOM J BEDROOM	101			0.04	4.04	11.56	0.08	8.08	45
ONE BEDROOM K	164	422, 722		0.04	6.56	11.56	0.08	13.12	45
ONE BEDROOM K BEDROOM	145			0.04	5.80	11.56	0.08	11.60	45
ONE BEDROOM N	332	221, 622		0.04	13.28	11.56 with mechanical vent	0.08	26.56	45
ONE BEDROOM N BEDROOM	120			0.04	4.80	11.56	0.08	9.60	45
URBAN ONE BEDROOM 0	341	218		0.04	13.64	11.56 with mechanical vent	0.08	27.28	35
URBAN ONE BEDROOM P	400	217		0.04	16.00	5.33 with mechanical vent	0.08	32.00	28 artificial light provided

LINK
LINK DESIGN GROUP LLC.
439 Kirkland Way
Kirkland, WA. US. 98033
+1.425.298.0080

602 Pengjiang RD, E461 ShangHai, China 200072
上海市鹏江区彭江路602号E座461室 邮编 200072
+86.21.6667.0228

Project No: Enter Client Supplied Number
XXXXXXXXXX

Client/Owner/Project Address

Owner
VIBRANT CITIES
606 Maynard Ave S
Suite 251
Seattle, WA 98104

Consultant

BLOSSOM APARTMENTS - COA SUBMITTAL

Issue Drawing Log

	09/04/20	INITIAL PRICING SET
	01/21/21	PERMIT SET SUBMITTAL
	03/05/21	COA SUBMITTAL

Professional Certification - I certify that these documents were prepared or approved by me, and that i am a duly licensed Architect under the laws of the state of Washington, License number _____, Expiration date _____.

8628 REGISTERED ARCHITECT
JENNY LI
STATE OF WASHINGTON

SDCI APPROVAL STAMP

©LINK DESIGN GROUP LLC.
All rights reserved. No part of this document may be reproduced in any form or by any means without permission in writing from LINK DESIGN GROUP LLC.

PROJECT NUMBER	20-0108A
PROJECT MANAGER	JX
DRAWN BY	DS, MB

Sheet Identification

WINDOW SCHEDULE

A820

GENERAL NOTES

1. SEE ENERGY FORMD FOR THE U-VALUES OF THE DOORS/WINDOWS.

STOREFRONT WINDOWS

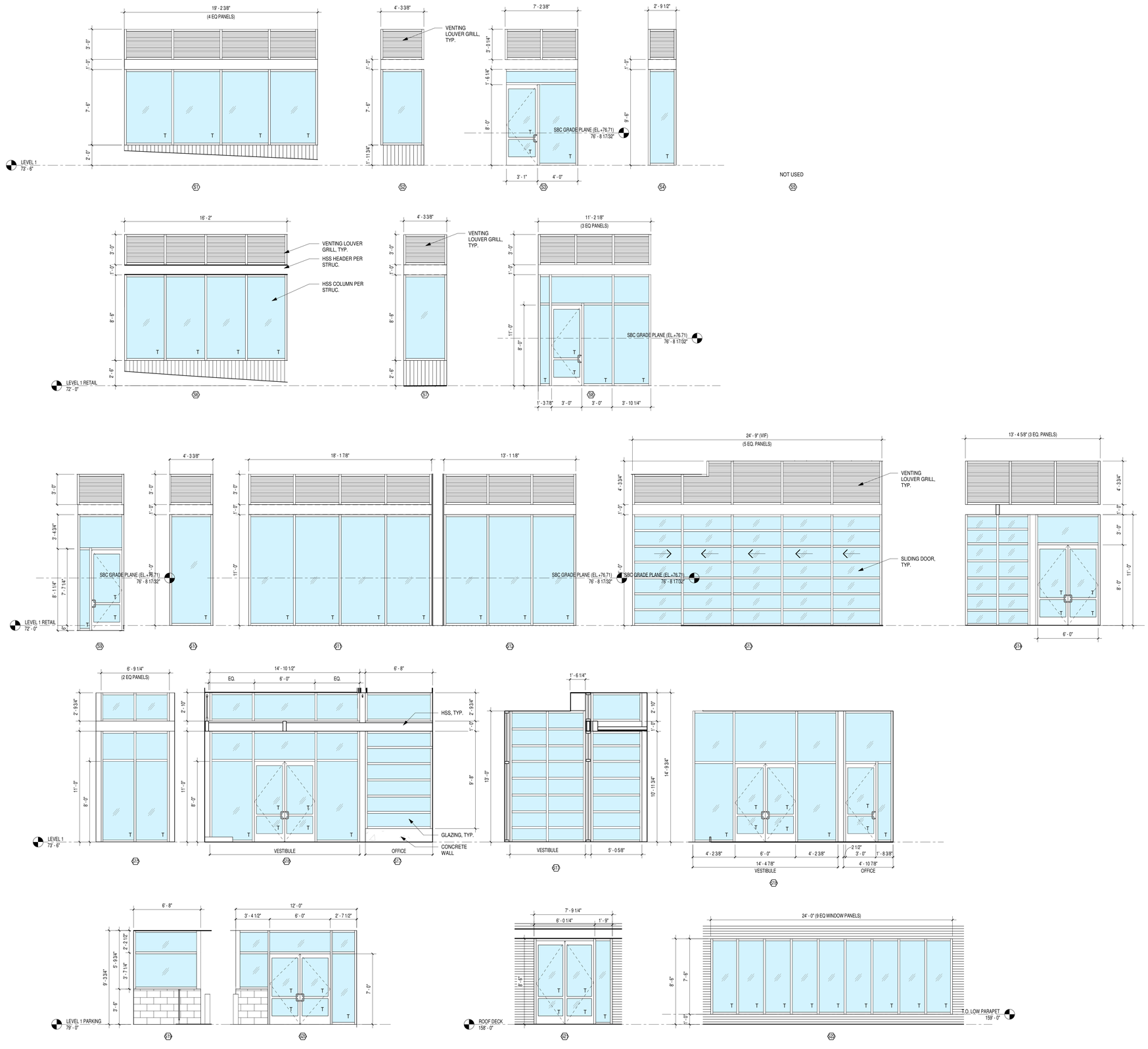

LINK
LINK DESIGN GROUP LLC.
439 Kirkland Way
Kirkland, WA. US. 98033
+1.425.298.0080

602 Pengjiang RD, E461 ShangHai, China 200072
上海市静安区彭江路602号E座461室 邮编 200072
+86.21.6667.0228

Project No: Enter Client Supplied Number
XXXXXXXXXX

Client/Owner/Project Address

Owner
VIBRANT CITIES
606 Maynard Ave S
Suite 251
Seattle, WA 98104

Consultant

BLOSSOM APARTMENTS - COA SUBMITTAL

Issue Drawing Log

	09/04/20	INITIAL PRICING SET
	01/21/21	PERMIT SET SUBMITTAL
	03/05/21	COA SUBMITTAL

Professional Certification - I certify that these documents were prepared or approved by me, and that i am a duly licensed Architect under the laws of the state of Washington, License number _____, Expiration date _____

8628 REGISTERED ARCHITECT
JENNY LI
STATE OF WASHINGTON

SDCI APPROVAL STAMP

©LINK DESIGN GROUP LLC.
All rights reserved. No part of this document may be reproduced in any form or by any means without permission in writing from LINK DESIGN GROUP LLC.

PROJECT NUMBER	20-0108A
PROJECT MANAGER	JX
DRAWN BY	DS, MB

Sheet Identification

STOREFRONT WINDOW SCHEDULE

A821

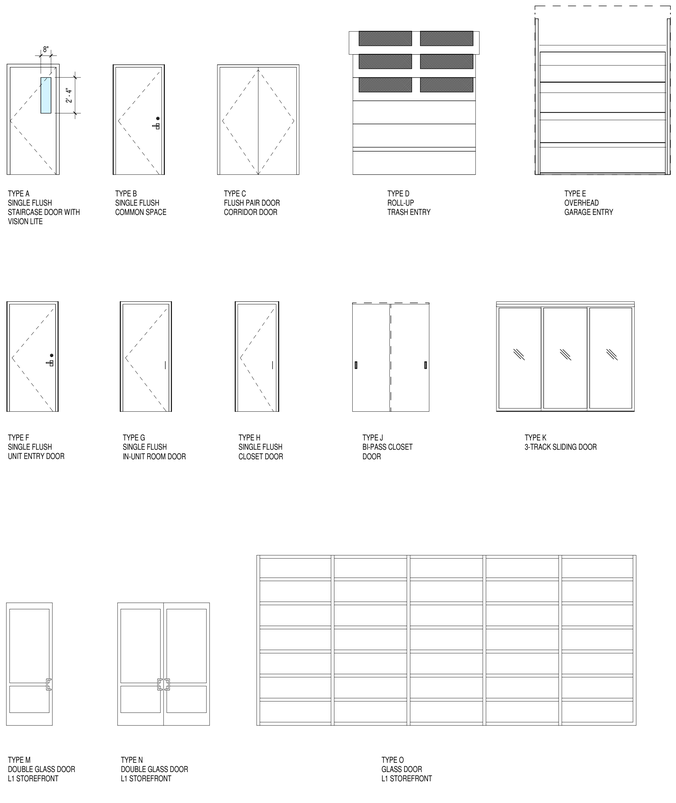

DOOR ELEVATIONS

1/4" = 1'-0"

DOOR SCHEDULE-COMMON

DOOR NO	LOCATION	TYPE	DOOR MATERIAL	DOOR FINISH	DOOR SIZE WIDTH	DOOR SIZE HEIGHT	DOOR SIZE THK	FRAME TYPE	FRAME MATERIAL	FRAME FINISH	HARD WARE SET	FIRE RATING	EGRESS	REVISION NO	COMMENTS
BASEMENT															
B004A	CORRIDOR	B			3' - 0"	7' - 0"	0' - 2"					45 min			
B101	CORRIDOR	B			3' - 0"	7' - 0"	0' - 2"					45 min			
B102A	CORRIDOR	B			3' - 0"	7' - 0"	0' - 2"					45 min			
B102B	CORRIDOR	B			3' - 0"	7' - 0"	0' - 2"					45 min			
B103A	CORRIDOR	B			3' - 0"	7' - 0"	0' - 2"					45 min			11
B103B	CORRIDOR	B			3' - 0"	7' - 0"	0' - 2"					45 min			
B104A	TRANSFORMER ROOM	B			3' - 6"	7' - 0"	0' - 2"					180 min			11
B104B	TRANSFORMER ROOM	B			3' - 6"	7' - 0"	0' - 2"					180 min			11
B105	CORRIDOR	B			3' - 0"	7' - 0"	0' - 2"					45 min			
B106A	CORRIDOR	B			3' - 0"	7' - 0"	0' - 2"					45 min			
B106B	BIKE ROOM	B			3' - 0"	7' - 0"	0' - 2"					45 min			
BSE	STAIR 02	A			3' - 0"	7' - 0"	0' - 2"					90 min	Yes		1,2,3,4,5,6,8,9,11
BSW	STAIR 01	A			3' - 0"	7' - 0"	0' - 2"					90 min	Yes		1,2,3,4,5,6,8,9,11
LEVEL 1 RETAIL															
1SW	STAIR 01	A			3' - 0"	7' - 0"	0' - 2"					90 min	Yes		1,2,3,4,5,6,8,9,11
103B	COMMERCIAL 03	O			24' - 9"	11' - 0"	0' - 2 11/32"					non-rated			
104	COMMERCIAL 03	B			3' - 0"	7' - 0"	0' - 2"					45 min			
1001	CORRIDOR	B			3' - 0"	7' - 0"	0' - 2"					90 min			
LEVEL 1															
1SE	STAIR 02	A			3' - 0"	7' - 0"	0' - 2"					90 min	Yes		1,2,3,4,5,6,8,9,11
101		M			3' - 1"	8' - 0"	0' - 2"					non-rated			
102		M			3' - 0"	8' - 0"	0' - 2"					non-rated			
103A		M			3' - 0"	8' - 0"	0' - 2"					non-rated			
103C		N			6' - 0"	8' - 0"	0' - 2"					non-rated			
105	LOBBY	B			3' - 0"	7' - 0"	0' - 2"					45 min			
1006A	VESTIBULE	N			6' - 0"	8' - 0"	0' - 2"					non-rated			
1006B	LOBBY	N			6' - 0"	7' - 9 1/2"	0' - 2"					non-rated			
1007	OFFICE	M			3' - 0"	7' - 9 1/2"	0' - 2"					non-rated			
1009	COMMERCIAL 03	P			7' - 2 9/16"	9' - 6"	0' - 2"								
1011	PARKING	N			6' - 0"	7' - 0"	0' - 2"					non-rated			
1012		B			3' - 0"	7' - 0"	0' - 2"					non-rated			
1013A	PARKING	C			6' - 0"	7' - 0"	0' - 2"								
LEVEL 1 PARKING															
109	PARKING	A			3' - 0"	7' - 0"	0' - 2"					90 min			
1004	STAIR 04	B			3' - 0"	7' - 0"	0' - 2"					non-rated	Yes		3,4,5,6,9,11
1015		E			0' - 0"	0' - 0"	0' - 0"					non-rated			
1016		B			3' - 6"	7' - 0"	0' - 2"					180 min			
LEVEL 2															
2SE	STAIR 02	A			3' - 0"	7' - 0"	0' - 2"					90 min	Yes		1,2,3,4,5,6,8,9,11
2SW	STAIR 01	A			3' - 0"	7' - 0"	0' - 2"					90 min	Yes		1,2,3,4,5,6,8,9,11
200A	STORAGE	C			6' - 0"	7' - 0"	0' - 2"					non-rated			
200B	TRASH	B			3' - 0"	7' - 0"	0' - 2"					45 min			1,2,3,4,5,6,9
200C	STORAGE	C			6' - 0"	7' - 0"	0' - 2"					non-rated			
LEVEL 3															
3SE	STAIR 02	A			3' - 0"	7' - 0"	0' - 2"					90 min			1,2,3,4,5,6,8,9,11
3SW	STAIR 01	A			3' - 0"	7' - 0"	0' - 2"					90 min			1,2,3,4,5,6,8,9,11
300		C			5' - 0"	7' - 0"	0' - 2"					180 min			1,2,3,10
300A	STORAGE	B			3' - 0"	7' - 0"	0' - 2"					non-rated			
300B	TRASH	B			3' - 0"	7' - 0"	0' - 2"					45 min			1,2,3,4,5,6,9
LEVEL 4															
4SE	STAIR 02	A			3' - 0"	7' - 0"	0' - 2"					90 min	Yes		1,2,3,4,5,6,8,9,11
4SW	STAIR 01	A			3' - 0"	7' - 0"	0' - 2"					90 min	Yes		1,2,3,4,5,6,8,9,11
400		C			5' - 0"	7' - 0"	0' - 2"					180 min			1,2,3,10,11
400A	STORAGE	B			3' - 0"	7' - 0"	0' - 2"					non-rated			
400B	TRASH	B			3' - 0"	7' - 0"	0' - 2"					45 min			1,2,3,4,5,6,9
400C	ELECTRICAL ROOM	B			3' - 0"	7' - 0"	0' - 2"					90 min			
LEVEL 5															
5SE	STAIR 02	A			3' - 0"	7' - 0"	0' - 2"					90 min	Yes		1,2,3,4,5,6,8,9,11
5SW	STAIR 01	A			3' - 0"	7' - 0"	0' - 2"					90 min	Yes		1,2,3,4,5,6,8,9,11
500		C			5' - 0"	7' - 0"	0' - 2"					180 min			1,2,3,10,11
500A	STORAGE	B			3' - 0"	7' - 0"	0' - 2"					non-rated			
500B	TRASH	B			3' - 0"	7' - 0"	0' - 2"					45 min			1,2,3,4,5,6,9
LEVEL 6															
6SE	STAIR 02	A			3' - 0"	7' - 0"	0' - 2"					90 min	Yes		1,2,3,4,5,6,8,9,11
6SW	STAIR 01	A			3' - 0"	7' - 0"	0' - 2"					90 min	Yes		1,2,3,4,5,6,8,9,11
600		C			5' - 0"	7' - 0"	0' - 2"					180 min			1,2,3,10,11
600A	STORAGE	B			3' - 0"	7' - 0"	0' - 2"					non-rated			
600B	TRASH	B			3' - 0"	7' - 0"	0' - 2"					45 min			1,2,3,4,5,6,9
LEVEL 7															
7SE	STAIR 02	A			3' - 0"	7' - 0"	0' - 2"					90 min	Yes		1,2,3,4,5,6,8,9,11
7SW	STAIR 01	A			3' - 0"	7' - 0"	0' - 2"					90 min	Yes		1,2,3,4,5,6,8,9,11
700A	STORAGE	B			3' - 0"	7' - 0"	0' - 2"					non-rated			1,2,3,10,11
700B	TRASH	B			3' - 0"	7' - 0"	0' - 2"					45 min			1,2,3,4,5,6,9
700C	ELECTRICAL ROOM	B			3' - 0"	7' - 0"	0' - 2"					90 min			
754		C			5' - 0"	7' - 0"	0' - 2"					180 min			
LEVEL 8															
8SE	STAIR 02	A			3' - 0"	7' - 0"	0' - 2"					90 min	Yes		1,2,3,4,5,6,8,9,11
8SW	STAIR 01	A			3' - 0"	7' - 0"	0' - 2"					90 min	Yes		1,2,3,4,5,6,8,9,11
800		C			5' - 0"	7' - 0"	0' - 2"					180 min			1,2,3,10,11
800A	STORAGE	B			3' - 0"	7' - 0"	0' - 2"					non-rated			
800B	TRASH	B			3' - 0"	7' - 0"	0' - 2"					45 min			1,2,3,4,5,6,9
8005A		F			3' - 0"	7' - 0"	0' - 2"					20 min			4,5,6,7,8,9
8005B		F			3' - 0"	7' - 0"	0' - 2"					20 min			4,5,6,7,8,9
8005C	AMENITY ROOM	G			3' - 0"	7' - 0"	0' - 2"					non-rated			
8005D		L			4' - 5"	7' - 8"	0' - 2"								
8005E		L			4' - 6"	7' - 8"	0' - 2"								
ROOF DECK															
9SE	STAIR 02	A			3' - 0"	7' - 0"	0' - 2"					90 min	Yes		1,2,3,4,5,6,8,9,11
9SW	STAIR 01	A			3' - 0"	7' - 0"	0' - 2"					90 min	Yes		1,2,3,4,5,6,8,9,11
901	ROOF DECK	N			5' - 8 1/2"	8' - 3 1/2"	0' - 2"					non-rated			
902	ROOF DECK	B			3' - 0"	7' - 0"	0' - 2"					90 min			
903		B			3' - 0"	7' - 0"	0' - 2"					90 min			

Grand total: 81

LINK
LINK DESIGN GROUP LLC.
439 Kirkland Way
Kirkland, WA. US. 98033
+1.425.298.0080

602 Pengjiang RD, E461 ShangHai, China 200072
上海市杨浦区彭江路602号E座461室 邮编 200072
+86.21.6667.0228

Project No: Enter Client Supplied Number
XXXXXXXXXX

Client/Owner/Project Address

Owner
VIBRANT CITIES
606 Maynard Ave S
Suite 251
Seattle, WA 98104

Consultant

BLOSSOM APARTMENTS - COA SUBMITTAL

Issue Drawing Log

	09/04/20	INITIAL PRICING SET
	01/21/21	PERMIT SET SUBMITTAL
	03/05/21	COA SUBMITTAL

Professional Certification - I certify that these documents were prepared or approved by me, and that i am a duly licensed Architect under the laws of the state of Washington. License number _____, Expiration date _____

8628 REGISTERED ARCHITECT JENNY LI STATE OF WASHINGTON

SDCI APPROVAL STAMP

©LINK DESIGN GROUP LLC.
All rights reserved. No part of this document may be reproduced in any form or by any means without permission in writing from LINK DESIGN GROUP LLC.

PROJECT NUMBER	20-0108A
PROJECT MANAGER	JX
DRAWN BY	DS, MB

Sheet Identification

DOOR SCHEDULE

A830

DOOR SCHEDULE-UNIT

DOOR NO	LOCATION	TYPE	DOOR MATERIAL	DOOR FINISH	DOOR SIZE WIDTH	DOOR SIZE HEIGHT	DOOR SIZE THK	FRAME TYPE	FRAME MATERIAL	FRAME FINISH	HARDWARE SET	FIRE RATING	EGRESS	REVISION NO	COMMENTS
ONE BEDROOM TYPE J															
UJ01		F			3' - 0"	7' - 0"	0' - 2"					20 min			4,5,6,7,8,9
UJ02	ONE BEDROOM TYPE J	G			3' - 0"	7' - 0"	0' - 2"					non-rated			
UJ03	ONE BEDROOM TYPE J	G			3' - 0"	7' - 0"	0' - 2"					non-rated			
UJ04	ONE BEDROOM TYPE J	J			5' - 0"	7' - 0"	0' - 1 3/4"					non-rated			
ONE BEDROOM TYPE K															
UK01		F			3' - 0"	7' - 0"	0' - 2"					20 min			4,5,6,7,8,9
UK02	ONE BEDROOM TYPE K	G			3' - 0"	7' - 0"	0' - 2"					non-rated			
UK03	ONE BEDROOM TYPE K	J			4' - 2"	7' - 0"	0' - 1 3/4"					non-rated			
UK04	ONE BEDROOM TYPE K	G			3' - 0"	7' - 0"	0' - 2"					non-rated			
UK05	ONE BEDROOM TYPE K	J			6' - 0"	7' - 0"	0' - 1 3/4"					non-rated			
ONE BEDROOM TYPE N															
UN01		F			3' - 0"	7' - 0"	0' - 2"					20 min			4,5,6,7,8,9
UN02	ONE BEDROOM TYPE N	G			3' - 0"	7' - 0"	0' - 2"					non-rated			
UN03	ONE BEDROOM TYPE N	G			3' - 0"	7' - 0"	0' - 2"					non-rated			
UN04	ONE BEDROOM TYPE N	J			5' - 0"	7' - 0"	0' - 1 3/4"					non-rated			
STUDIO TYPE A															
UA01		F			3' - 0"	7' - 0"	0' - 2"					20 min			4,5,6,7,8,9
UA02	STUDIO TYPE A	G			3' - 0"	7' - 0"	0' - 2"					non-rated			
UA03	STUDIO TYPE A	J			4' - 2"	7' - 0"	0' - 1 3/4"					non-rated			
STUDIO TYPE A sim1															
UA101		F			3' - 0"	7' - 0"	0' - 2"					20 min			4,5,6,7,8,9
UA102	STUDIO TYPE A sim1	G			3' - 0"	7' - 0"	0' - 2"					non-rated			
UA103	STUDIO TYPE A sim1	J			4' - 2"	7' - 0"	0' - 1 3/4"					non-rated			
STUDIO TYPE B															
UB01		F			3' - 0"	7' - 0"	0' - 2"					20 min			4,5,6,7,8,9
UB02	STUDIO TYPE B	G			3' - 0"	7' - 0"	0' - 2"					non-rated			
UB03	STUDIO TYPE B	J			4' - 2"	7' - 0"	0' - 1 3/4"					non-rated			
STUDIO TYPE B sim1															
UB101		F			3' - 0"	7' - 0"	0' - 2"					20 min			4,5,6,7,8,9
UB102	STUDIO TYPE B sim1	G			3' - 0"	7' - 0"	0' - 2"					non-rated			
UB103	STUDIO TYPE B sim1	H			2' - 6"	7' - 0"	0' - 2"					non-rated			
STUDIO TYPE B sim2															
UB201		F			3' - 0"	7' - 0"	0' - 2"					20 min			4,5,6,7,8,9
UB202	STUDIO TYPE B sim2	G			3' - 0"	7' - 0"	0' - 2"					non-rated			
UB203	STUDIO TYPE B sim2	J			6' - 0"	7' - 0"	0' - 1 3/4"					non-rated			
STUDIO TYPE B sim3															
UB301		F			3' - 0"	7' - 0"	0' - 2"					20 min			4,5,6,7,8,9
UB302	STUDIO TYPE B sim3	G			3' - 0"	7' - 0"	0' - 2"					non-rated			
UB303	STUDIO TYPE B sim3	H			2' - 0"	7' - 0"	0' - 2"					non-rated			
STUDIO TYPE C															
UC01		F			3' - 0"	7' - 0"	0' - 2"					20 min			4,5,6,7,8,9
UC02	STUDIO TYPE C	G			3' - 0"	7' - 0"	0' - 2"					non-rated			
UC03	STUDIO TYPE C	J			5' - 0"	7' - 0"	0' - 1 3/4"					non-rated			
STUDIO TYPE C sim1															
UC101		F			3' - 0"	7' - 0"	0' - 2"					20 min			4,5,6,7,8,9
UC102	STUDIO TYPE C sim1	G			3' - 0"	7' - 0"	0' - 2"					non-rated			
UC103	STUDIO TYPE C sim1	J			4' - 2"	7' - 0"	0' - 1 3/4"					non-rated			

DOOR SCHEDULE-UNIT

DOOR NO	LOCATION	TYPE	DOOR MATERIAL	DOOR FINISH	DOOR SIZE WIDTH	DOOR SIZE HEIGHT	DOOR SIZE THK	FRAME TYPE	FRAME MATERIAL	FRAME FINISH	HARDWARE SET	FIRE RATING	EGRESS	REVISION NO	COMMENTS
STUDIO TYPE D															
UD01		F			3' - 0"	7' - 0"	0' - 2"					20 min			4,5,6,7,8,9
UD02	STUDIO TYPE D	G			3' - 0"	7' - 0"	0' - 2"					non-rated			
UD03	STUDIO TYPE D	J			4' - 2"	7' - 0"	0' - 1 3/4"					non-rated			
STUDIO TYPE E															
UE01		F			3' - 0"	7' - 0"	0' - 2"					20 min			4,5,6,7,8,9
UE02	STUDIO TYPE E	G			3' - 0"	7' - 0"	0' - 2"					non-rated			
UE03	STUDIO TYPE E	J			6' - 0"	7' - 0"	0' - 1 3/4"					non-rated			
STUDIO TYPE E sim1															
UE101		F			3' - 0"	7' - 0"	0' - 2"					20 min			4,5,6,7,8,9
UE102	STUDIO TYPE E sim1	G			3' - 0"	7' - 0"	0' - 2"					non-rated			
UE103	STUDIO TYPE E sim1	J			6' - 0"	7' - 0"	0' - 1 3/4"					non-rated			
STUDIO TYPE F															
UF01		F			3' - 0"	7' - 0"	0' - 2"					20 min			4,5,6,7,8,9
UF02	STUDIO TYPE F	G			3' - 0"	7' - 0"	0' - 2"					non-rated			
UF03	STUDIO TYPE F	H			2' - 6"	7' - 0"	0' - 2"					non-rated			
STUDIO TYPE F sim1															
UF101		F			3' - 0"	7' - 0"	0' - 2"					20 min			4,5,6,7,8,9
UF102	STUDIO TYPE F sim1	G			3' - 0"	7' - 0"	0' - 2"					non-rated			
UF103	STUDIO TYPE F sim1	J			4' - 2"	7' - 0"	0' - 1 3/4"					non-rated			
STUDIO TYPE G															
UG01		F			3' - 0"	7' - 0"	0' - 2"					20 min			4,5,6,7,8,9
UG02	STUDIO TYPE G	G			3' - 0"	7' - 0"	0' - 2"					non-rated			
UG03	STUDIO TYPE G	H			2' - 8"	7' - 0"	0' - 2"					non-rated			
STUDIO TYPE H															
UH01		F			3' - 0"	7' - 0"	0' - 2"					20 min			4,5,6,7,8,9
UH02	STUDIO TYPE H	G			3' - 0"	7' - 0"	0' - 2"					non-rated			
UH03	STUDIO TYPE H	J			4' - 2"	7' - 0"	0' - 1 3/4"					non-rated			
STUDIO TYPE L															
UL01		F			3' - 0"	7' - 0"	0' - 2"					20 min			4,5,6,7,8,9
UL02	STUDIO TYPE L	G			3' - 0"	7' - 0"	0' - 2"					non-rated			
UL03	STUDIO TYPE L	J			6' - 0"	7' - 0"	0' - 1 3/4"					non-rated			
STUDIO TYPE M															
UM01		F			3' - 0"	7' - 0"	0' - 2"					20 min			4,5,6,7,8,9
UM02	STUDIO TYPE M	G			3' - 0"	7' - 0"	0' - 2"					non-rated			
UM03	STUDIO TYPE M	J			4' - 2"	7' - 0"	0' - 1 3/4"					non-rated			
URBAN ONE BEDROOM TYPE O															
UO01		F			3' - 0"	7' - 0"	0' - 2"					20 min			4,5,6,7,8,9
UO02	URBAN ONE BEDROOM TYPE O	G			3' - 0"	7' - 0"	0' - 2"					non-rated			
UO03	URBAN ONE BEDROOM TYPE O	K			9' - 0"	7' - 0"	0' - 1 3/4"					non-rated			
UO04	URBAN ONE BEDROOM TYPE O	J			5' - 0"	7' - 0"	0' - 1 3/4"					non-rated			
UO05	URBAN ONE BEDROOM TYPE O	J			5' - 0"	7' - 0"	0' - 1 3/4"					non-rated			
URBAN ONE BEDROOM TYPE P															
UP01		F			3' - 0"	7' - 0"	0' - 2"					20 min			4,5,6,7,8,9
UP02	URBAN ONE BEDROOM TYPE P	G			3' - 0"	7' - 0"	0' - 2"					non-rated			
UP03	URBAN ONE BEDROOM TYPE P	J			5' - 0"	7' - 0"	0' - 1 3/4"					non-rated			
UP04	URBAN ONE BEDROOM TYPE P	K			9' - 0"	7' - 0"	0' - 1 3/4"					non-rated			

Grand total: 73

DOOR NOTES

NOTE #1 - OPENING PROTECTIVES (IBC 716)
A) FIRE DOOR ASSEMBLIES AND SHUTTERS SHALL BE INSTALLED IN ACCORDANCE WITH IBC 716.5 AND NFPA 80.
B) IBC 716.5.1: SIDE HINGED DOORS SHALL BE TESTED IN ACCORDANCE WITH NFPA 252 OR UL 10C. AFTER 5 MINUTES INTO THE NFPA 252 TEST, THE NEUTRAL PRESSURE LEVEL IN THE FURNACE SHALL BE ESTABLISHED AT 40 INCHES OR LESS ABOVE THE SILL.
C) IBC 716.5.2: OTHER TYPES OF DOORS SHALL BE TESTED IN ACCORDANCE WITH NFPA 252 OR UL 10B. THE PRESSURE IN THE FURNACE SHALL BE MAINTAINED AS NEARLY EQUAL TO THE ATMOSPHERIC PRESSURE AS POSSIBLE. ONCE ESTABLISHED, THE PRESSURE SHALL BE MAINTAINED DURING THE ENTIRE TEST PERIOD.
D) IBC 716.5.7: FIRE DOOR ASSEMBLES SHALL BE LABELED BY AN APPROVED AGENCY. THE LABELS SHALL COMPLY WITH NFPA 80, AND SHALL BE PERMANENTLY AFFIXED TO THE DOOR FRAME.
E)NOT USED
F) IBC 716.5.9: FIRE DOORS SHALL BE SELF-CLOSING OR AUTOMATIC CLOSING. SIDE-HINGED SWINGING FIRE DOORS SHALL BE PROVIDED WITH AN ACTIVE LATCH BOLT THAT WILL SECURE THE DOOR WHEN IT IS CLOSED. IBC 716.5.9.3-SMOKE ACTIVATED DOORS: INSTALLED IN THE FOLLOWING LOCATIONS SHALL BE ATUOMATIC-CLOSING BY THE ACTUATION OF SMOKE DETECTORS INSTALLED IN ACCORDANCE WITH SECTION 907.2 OR BY LOSS OF POWER TO THE SMOKE DETECTORS OR HOLD OPEN DEVICES.
G) IBC 716.5.7: FIRE DOORS ARE REQUIRED TO BE TESTED, LISTED AND LABELED BY A THIRD PARTY TESTING AGENCY. LABELS SHALL COMPLY WITH NFPA 80 AND SHALL BE PERMANENTLY AFFIXED TO THE DOOR OR FRAME.
H) IBC 716.5.7.4: THE FRAMES OF FIRE DOORS SHALL BE LABELED SHOWING THE NAMES OF THE MANUFACTURER AND THIRD-PARTY INSPECTION AGENCY.

NOTE #2 - SMOKE BARRIERS & SMOKEPROOF ENCLOSURES (IBC 716.5.3)
FIRE DOOR ASSEMBLIES REQUIRED TO HAVE A MINIMUM FIRE PROTECTION RATING OF 20 MINUTES WHERE LOCATED IN CORRIDOR WALLS SHALL BE TESTED IN ACCORDANCE WITH NFPA 252 OR UL 10C WITHOUT THE HOSE STREAM TEST. IF A 20 MINUTE FIRE DOOR ASSEMBLY CONTAINS GLAZING MATERIAL, THE GLAZING MATERIAL IN THE DOOR ITSELF SHALL HAVE A MINIMUM FIRE PROTECTION OF 20 MINUTES AND BE EXEMPT FROM THE HOSE STREAM TEST. GLAZING MATERIAL IN ANY OTHER PART OF THE DOOR ASSEMBLY, INCLUDING TRANSOM LITES AND SIDELITES, SHALL BE TESTED IN ACCORDANCE WITH NFPA 257, INCLUDING THE HOSE STREAM TEST. FIRE DOOR ASSEMBLIES SHALL ALSO MEET THE REQUIREMENTS FOR A SMOKE- AND DRAFT-CONTROL DOOR ASSEMBLY TESTED IN ACCORDANCE WITH UL 1784 WITH AN ARTIFICIAL BOTTOM SEAL INSTALLED ACROSS THE FULL WIDTH OF THE BOTTOM OF DOOR ASSEMBLY. THE AIR LEAKAGE RATE OF THE DOOR ASSEMBLY SHALL NOT EXCEED 3.0 CFM PER SQUARE FOOT OF DOOR OPENING AT 0.10 INCH OF WATER FOR BOTH THE AMBIENT TEMPERATURE AND ELEVATED TEMPERATURE TESTS. LOUVERS SHALL BE PROHIBITED.

NOTE #3 - HEADROOM (IBC 1003.3.1)
DOOR CLOSERS AND STOPS SHALL NOT REDUCE HEADROOM TO LESS THAN 78 INCHES.

NOTE #4 - MEANS OF EGRESS DOORS (IBC 1008.1)

A) SHALL BE READILY DISTINGUISHABLE FROM THE ADJACENT CONSTRUCTION AND FINISHES SUCH THAT DOORS ARE EASILY RECOGNIZABLE AS DOORS.
B) MINIMUM 32 INCHES CLEAR WIDTH
C) EGRESS DOORS SHALL BE SIDE-HINGED OR PIVOTED SWINGING.
D) DOORS SHALL SWING IN THE DIRECTION OF EGRESS TRAVEL WHERE SERVING AN OCCUPANT LOAD OF 50 OR MORE PERSONS.
E) EGRESS DOORS SHALL BE READILY OPENABLE FROM THE EGRESS SIDE WITHOUT THE USE OF KEY OR SPECIAL KNOWLEDGE OR EFFORT.
F) DOOR HANDLES, PULLS, LATCHES LOCKS OR OTHER OPERATING DEVICES ON DOORS SHALL BE INSTALLED 34 INCHES MIN AND 48 INCHES MAX.

NOTE #5 -DOOR OPENING FORCE (IBC 1008.1.3)
IBC 1008.1.3: FIRE DOORS SHALL HAVE THE MINIMUM OPENING FORCE ALLOWABLE BY THE BUILDING OFFICIAL. THE MAXIMUM FORCE FOR PUSHING OPEN OR PULLING OPEN DOORS OTHER THAN FIRE DOORS SHALL BE AS FOLLOWS:
A) INTERIOR HINGED DOOR: 5.0 POUNDS
B) SLIDING OR FOLDING DOORS: 5.0 POUNDS
C) EXTERIOR HINGED, SLIDING, OR FOLDING DOOR: 10.0 POUNDS
THESE FORCES DO NOT APPLY TO THE FORCE REQUIRED TO RETRACT LATCH BOLTS OR DISENGAGE OTHER DEVICES THAT HOLD THE DOOR IN A CLOSED POSITION.

NOTE #6 - AIR-BORNE SOUND (IBC 1207.2)
DWELLING UNIT ENTRY DOORS SHALL HAVE AN STC RATING OF 28 MIN., AND SHALL HAVE PERIMETER SEALS.

NOTE #7 - ACCESSIBLE UNITS
FOR LOCATIONS OF ACCESSIBLE UNITS, SEE FLOOR PLANS. PLEASE REFER TO SHEETS G 0.11 AND G 0.12 FOR ADDITIONAL PROVISIONS FOR DOORS SERVING ACCESSIBLE UNITS AND ROUTES.

NOTE #8 - VISITOR OBSERVATION PORTS IN CORRIDORS & SMOKE BARRIERS (IBC 715.4.3 EXCEPTION 1)
VIEWPORTS MUST NOT BE LARGER THAN 1 INCH IN DIAMETER & MUST HAVE AT LEAST AN 0.25-INCH-THICK GLASS DISC AND THE HOLDER IS OF METAL THAT WILL NOT MELT OUT WHERE SUBJECT TO TEMPERATURES OF 1,700 DEGREES F (927 DEGREES C).

NOTE #9 - MISC NOTES
DOOR THRESHOLDS SHALL NOT EXCEED 1/2-INCH PER ANSI A-117.1,
CONTRACTOR SHALL FIELD MEASURE ALL ROUGH OPENINGS AND CONFIRM DIMENSIONS PRIOR TO ORDERING DOORS

NOTE #10 - ELECTROMAGNETICALLY LOCKED EGRESS DOORS (SBC 1010.1.9.9)

1) THE HARDWARE IF AFFIXED TO THE DOOR LEAF.
2) HARDWARE IS CAPABBLE OF BEING OPERATED WITH ONE HAND WITOUT SPECIAL KNOWLEDGE, KEYS, OR TOOLS.
3) OPERATION OF THE HARDWARE DIRECTRLY INTERRUPTS THE POWER TO THE ELECTROMAGNETIC LOCK AND UNLOCKS THE DOOR IMMEDIATELY.
4) LOWER OF POWER TO THE LOCKING SYSTEM AUTOMATICALLY UNLOCKS THE DOORS.
5) WHER PANIC OR FIRE EXIT HARDWARE US REQUIRED BY SECTION 1010.1.10, OPERATION OF THE PANIC HARDWARE ALSO RELEASES THE ELECTROMAGNETIC LOCK.
6) THE LOCKING SYSTEM UNITS SHALL BE LISTED IN ACCORDANCE WITH UL 294.

NOTE #11 - PANIC HARDWARE

DOORS SERVING ROOMS OR SPACES WITH AN OCCUPANT LOAD OF 50 OR MORE IN A GROUP A OR E OCCUPANCY SHALL NOT BE PROVIDED WITH A LATCH OR LOCK UNLESS IT IS PANIC HARDWARE OR FIRE EXIT HARDWARE.

LINK
LINK DESIGN GROUP LLC.
439 Kirkland Way
Kirkland, WA. US. 98033
+1.425.298.0080

602 Pengjiang RD, E461 ShangHai, China 200072
上海市静安区彭江路602号E座461室 邮编 200072
+86.21.6667.0228

Project No: Enter Client Supplied Number
XXXXXXXXXX

Client/Owner/Project Address

Owner
VIBRANT CITIES
606 Maynard Ave S
Suite 251
Seattle, WA 98104

Consultant

BLOSSOM APARTMENTS - COA SUBMITTAL

-

Issue Drawing Log

	09/04/20	INITIAL PRICING SET
	01/21/21	PERMIT SET SUBMITTAL
	03/05/21	COA SUBMITTAL

Professional Certification - I certify that these documents were prepared or approved by me, and that i am a duly licensed Architect under the laws of the state of Washington, License number _____, Expiration date _____.

8628
REGISTERED ARCHITECT
Jenny Li
JENNY LI
STATE OF WASHINGTON

SDCI APPROVAL STAMP

©LINK DESIGN GROUP LLC.
All rights reserved. No part of this document may be reproduced in any form or by any means without permission in writing from LINK DESIGN GROUP LLC.

PROJECT NUMBER	20-0108A
PROJECT MANAGER	JX
DRAWN BY	DS, MB

Sheet Identification

DOOR SCHEDULE

A831

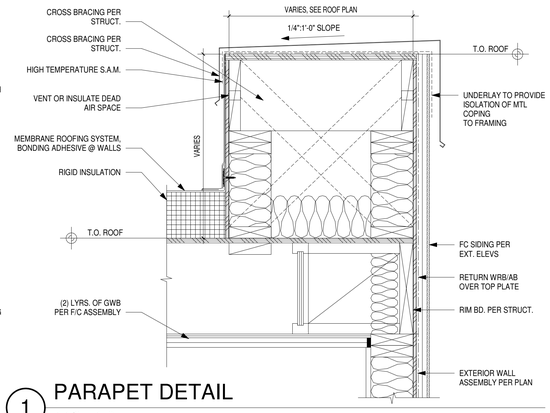

1 PARAPET DETAIL
1 1/2" = 1'-0"

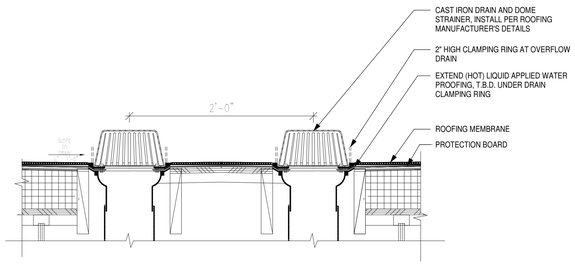

2 ROOF DRAIN DETAIL
1 1/2" = 1'-0"

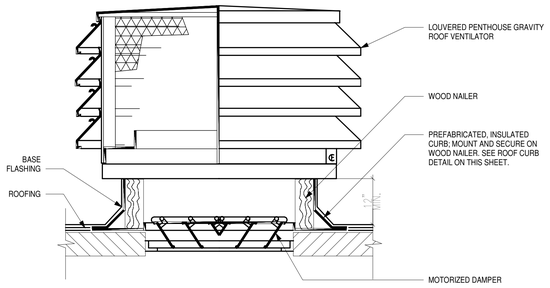

3 PENTHOUSE ROOF VENT
3/4" = 1'-0"

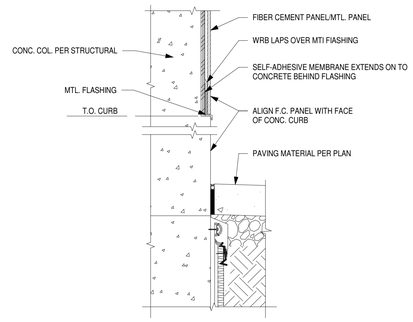

4 FC PANEL AT CONC WALL
1 1/2" = 1'-0"

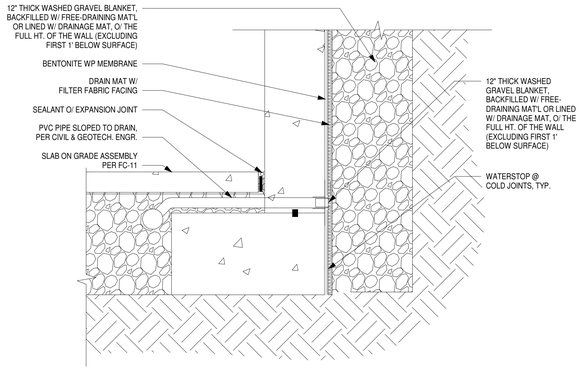

5 RETAINING WALL FOUNDATION DETAIL
1" = 1'-0"

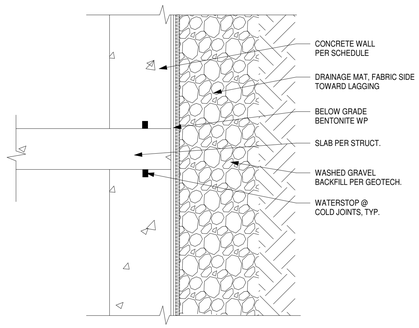

6 RETAINING WALL
1" = 1'-0"

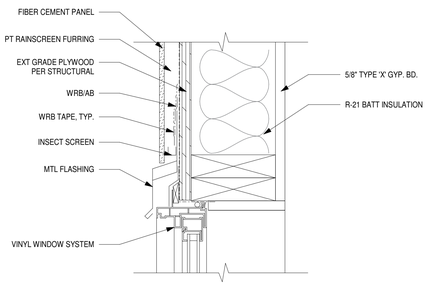

9 WINDOW HEAD DETAIL
3" = 1'-0"

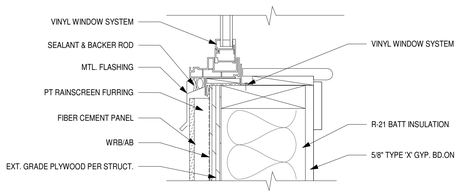

10 WINDOW SILL DETAIL
3" = 1'-0"

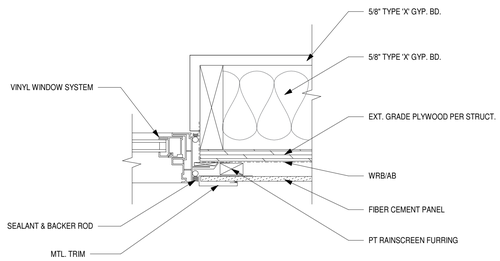

11 WINDOW JAMB DETAIL
3" = 1'-0"

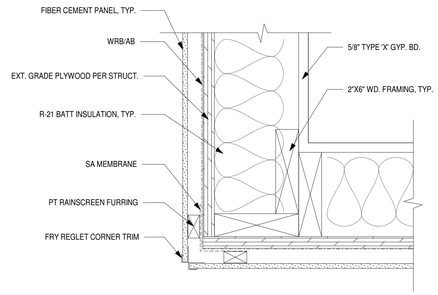

12 FC PANEL AT OUTSIDE CORNER
3" = 1'-0"

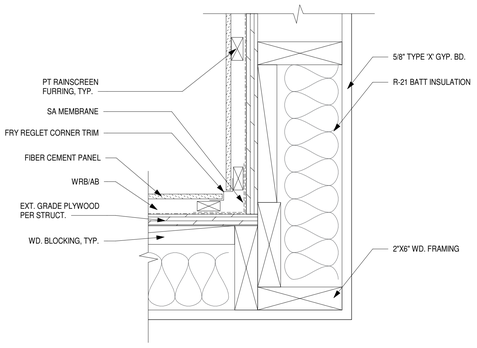

13 FC PANEL AT INSIDE CORNER
3" = 1'-0"

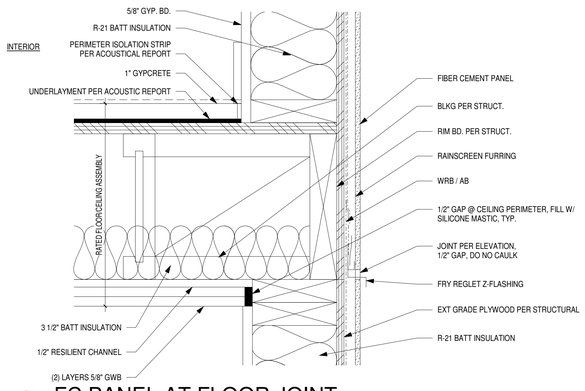

14 FC PANEL AT FLOOR JOINT
3" = 1'-0"

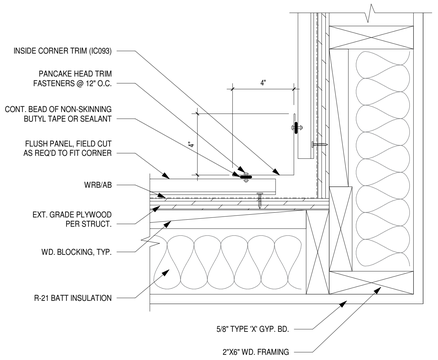

15 METAL PANEL AT INSIDE CORNER
3" = 1'-0"

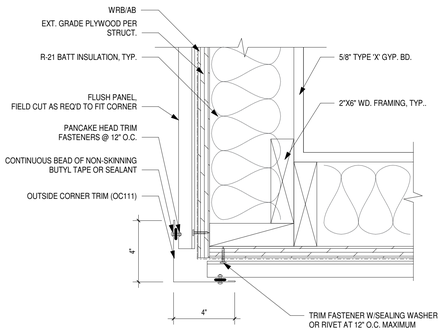

16 METAL PANEL AT OUTSIDE CORNER
3" = 1'-0"

LINK
LINK DESIGN GROUP LLC.
439 Kirkland Way
Kirkland, WA. US. 98033
+1.425.298.0080
602 Pengjiang RD, E461 ShangHai, China 200072
上海市静安区彭江路602号E座461室 邮编 200072
+86.21.6667.0228

Project No: Enter Client Supplied Number XXXXXXXXXX

Client/Owner/Project Address

Owner
VIBRANT CITIES
606 Maynard Ave S
Suite 251
Seattle, WA 98104

Consultant

BLOSSOM APARTMENTS - COA SUBMITTAL

Issue Drawing Log

	09/04/20	INITIAL PRICING SET
	01/21/21	PERMIT SET SUBMITTAL
	03/05/21	COA SUBMITTAL

Professional Certification - I certify that these documents were prepared or approved by me, and that i am a duly licensed Architect under the laws of the state of Washington, License number _____, Expiration date _____.

8628 REGISTERED ARCHITECT JENNY LI STATE OF WASHINGTON

SDCI APPROVAL STAMP

©LINK DESIGN GROUP LLC.
All rights reserved. No part of this document may be reproduced in any form or by any means without permission in writing from LINK DESIGN GROUP LLC.

PROJECT NUMBER	20-0108A
PROJECT MANAGER	JX
DRAWN BY	DS, MB

Sheet Identification

EXTERIOR DETAILS

A901

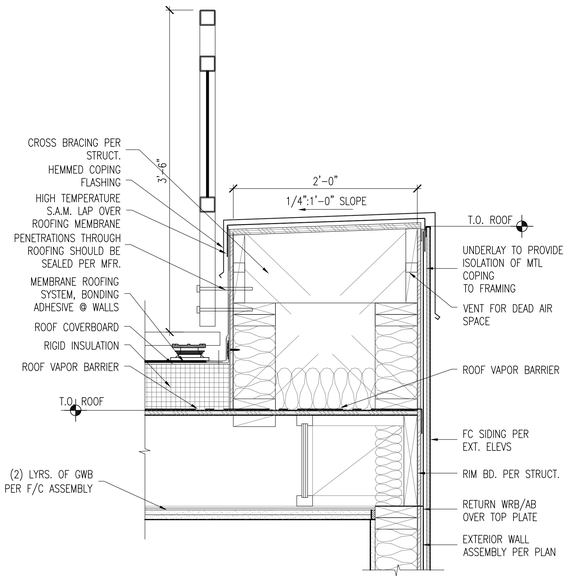

1 A902 GUARDRAIL DETAIL @ PARAPET

SCALE: 1 1/2"=1'-0"

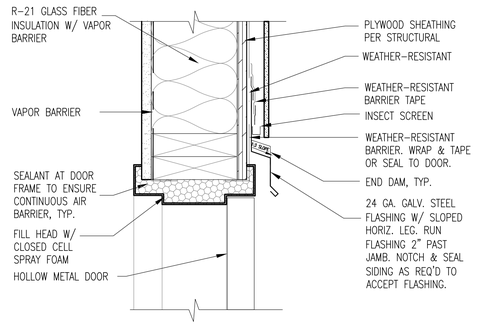

2 A902 DOOR HEAD DETAIL

SCALE: 3"=1'-0"

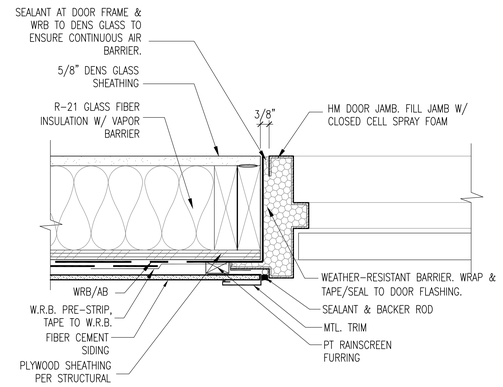

3 A902 DOOR JAMB DETAIL

SCALE: 3"=1'-0"

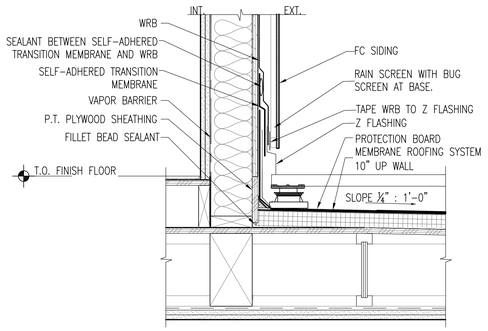

4 A902 WALL SECTION @ ROOF DECK

SCALE: 3"=1'-0"

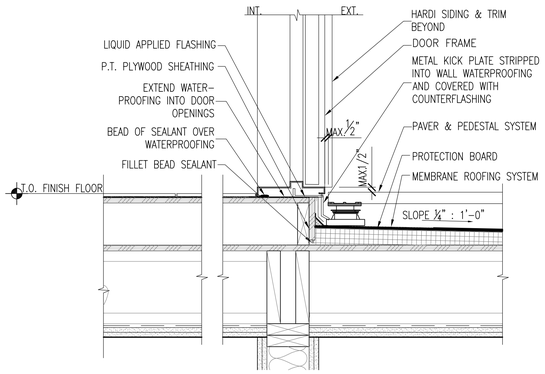

5 A902 DOOR THRESHOLD @ ROOF DECK

SCALE: 1 1/2"=1'-0"

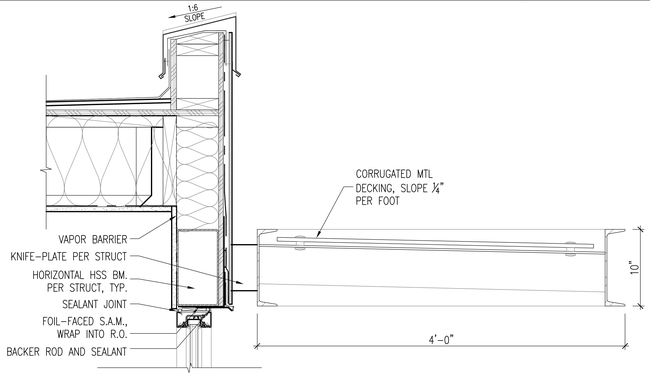

6 A902 CANOPY DETAIL @ ROOF ELEVATOR VESTIBULE ENTRY

SCALE: 1 1/2"=1'-0"

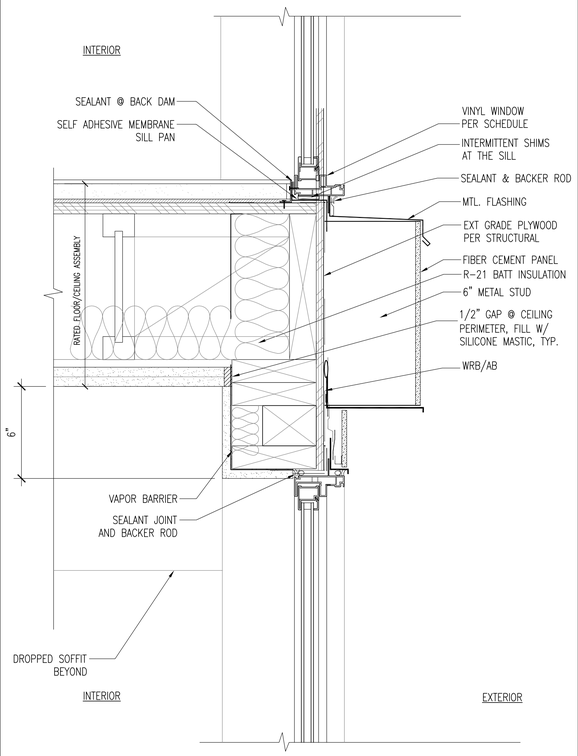

7 A902 WINDOW DETAIL

SCALE: 3"=1'-0"

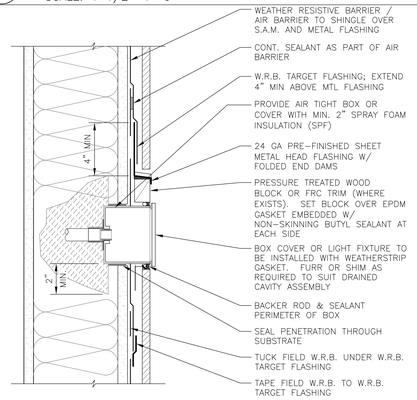

8 A902 INSET ELECTRICAL BOX

SCALE: 3" = 1'-0"

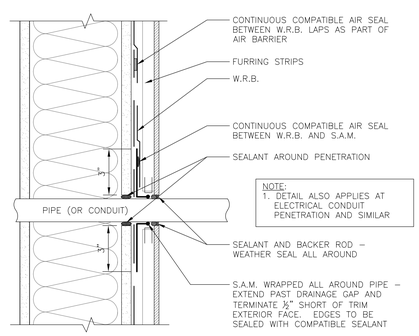

NOTE:
1. DETAIL ALSO APPLIES AT ELECTRICAL CONDUIT PENETRATION AND SIMILAR

9 A902 MINOR PENETRATION DETAIL

SCALE: 3" = 1'-0"

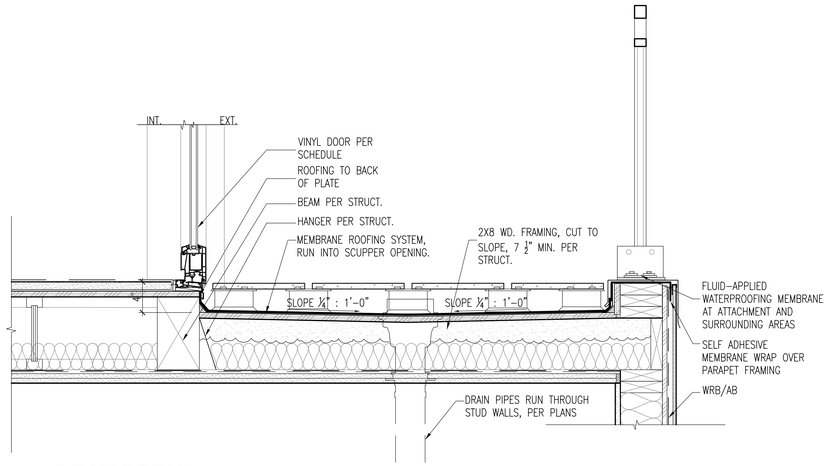

10 A902 DECK DETAIL

SCALE: 1-1/2"=1'-0"

LINK

LINK DESIGN GROUP LLC.

439 Kirkland Way
Kirkland, WA. US. 98033
+1.425.298.0080

602 Pengjiang RD, E461 Shanghai, China 200072
上海市浦江镇 602 号E 座461 室 邮编 200072
+86.21.6667.0228

Project No: Enter Client Supplied Number
XXXXXXXXXX

Client/Owner/Project Address

Owner
VIBRANT CITIES
606 Maynard Ave S
Suite 251
Seattle, WA 98104

Consultant

BLOSSOM APARTMENTS - COA SUBMITTAL

-

Issue Drawing Log

	09/04/20	INITIAL PRICING SET
	01/21/21	PERMIT SET SUBMITTAL
	03/05/21	COA SUBMITTAL

Professional Certification - I certify that these documents were prepared or approved by me, and that I am a duly licensed Architect under the laws of the state of Washington, License number _____, Expiration date _____.

8628 REGISTERED ARCHITECT
Jenny Li
JENNY LI
STATE OF WASHINGTON

SDCI APPROVAL STAMP

©LINK DESIGN GROUP LLC.
All rights reserved. No part of this document may be reproduced in any form or by any means without permission in writing from LINK DESIGN GROUP LLC.

PROJECT NUMBER	20-0108A
PROJECT MANAGER	JX
DRAWN BY	DS, MB

Sheet Identification

EXTERIOR DETAILS

A902

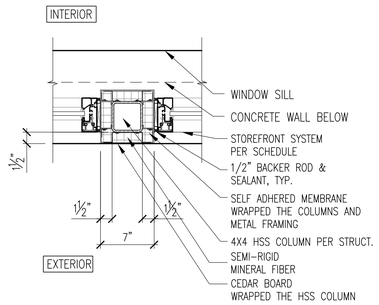

1 A903 PLAN DETAIL @ STOREFRONT

SCALE: 1 1/2"=1'-0"

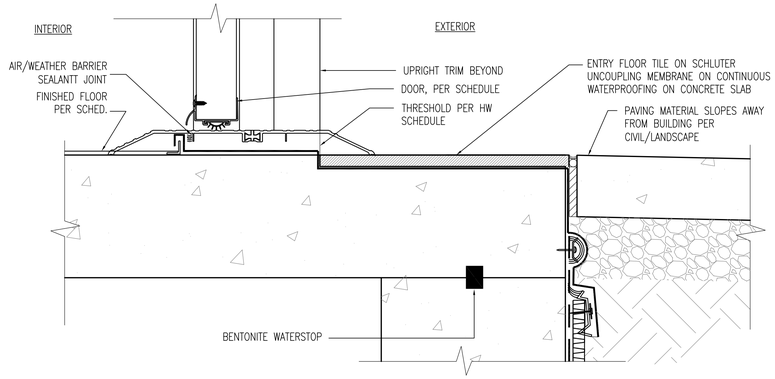

2 A903 DOOR THRESHOLD DETAIL

SCALE: 3"=1'-0"

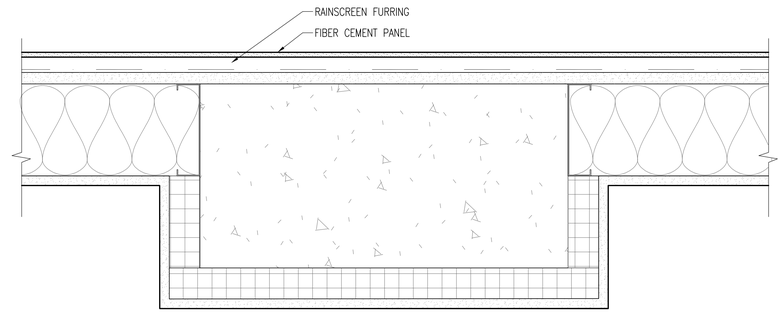

3 A903 PLAN DETAIL @ CONCRETE COLUMN

SCALE: 3" = 1'-0"

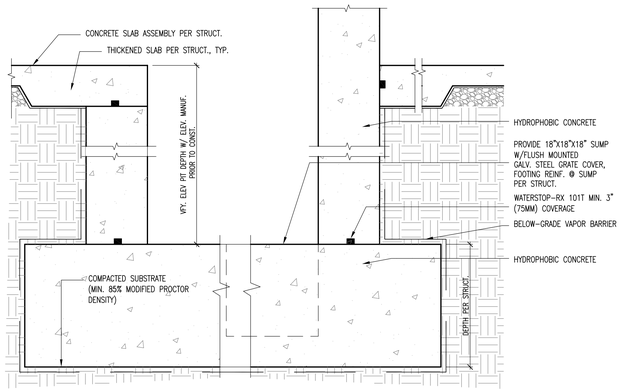

4 A903 ELEVATOR PIT DETAIL

SCALE: 1"=1'-0"

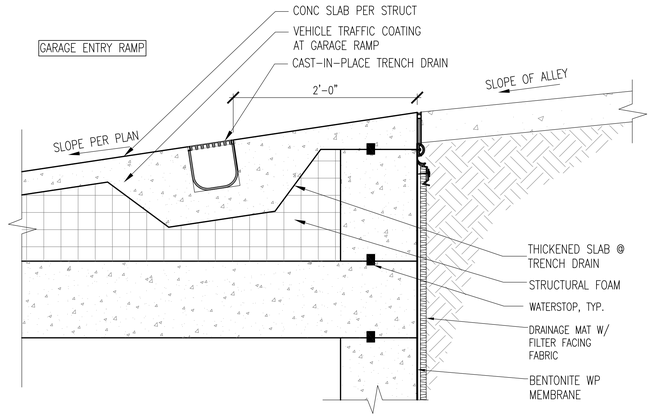

5 A903 TRENCH DRAIN DETAIL @ GARAGE ENTRY

SCALE: 1 1/2"=1'-0"

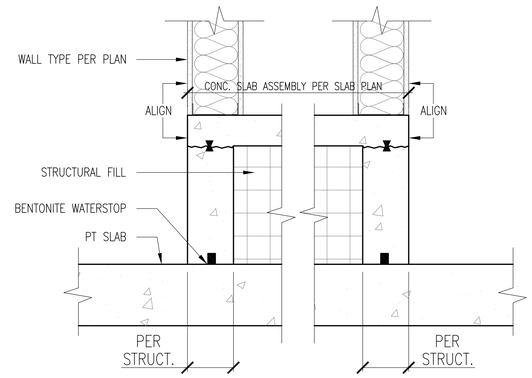

6 A903 ELEVATED SLAB DETAIL

SCALE: 1 1/2"=1'-0"

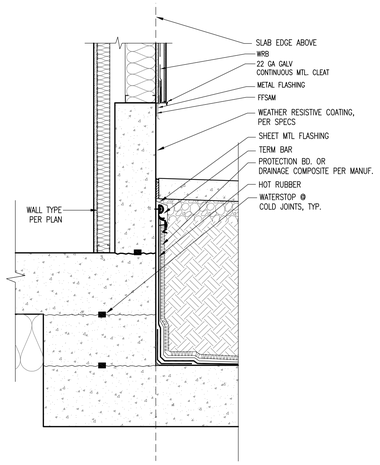

7 A903 WALL SECTION

SCALE: 1"=1'-0"

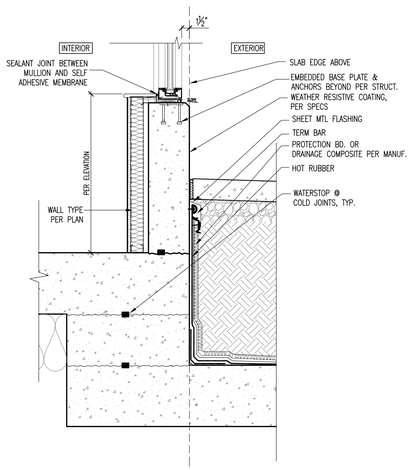

8 A903 WINDOW SILL @ STOREFRONTS

SCALE: 1"=1'-0"

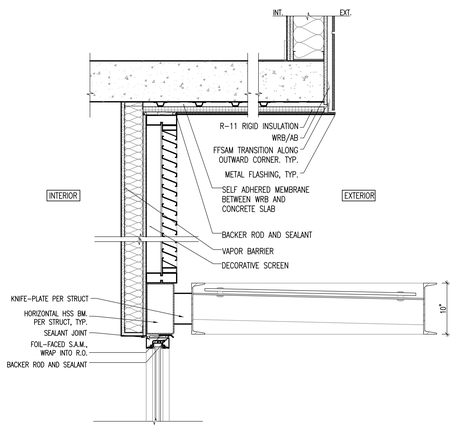

9 A903 LOUVER DETAIL

SCALE: 1"=1'-0"

LINK

LINK DESIGN GROUP LLC.

439 Kirkland Way
Kirkland, WA. US. 98033
+1.425.298.0080

602 Pengjiang RD, E461 Shanghai, China 200072
上海市静安区彭江路 602 号E 座461 室 邮编 200072
+86.21.6667.0228

Project No: Enter Client Supplied Number
XXXXXXXXXX

Client/Owner/Project Address

Owner
VIBRANT CITIES
606 Maynard Ave S
Suite 251
Seattle, WA 98104

Consultant

BLOSSOM APARTMENTS - COA SUBMITTAL

-

Issue Drawing Log

	09/04/20	INITIAL PRICING SET
	01/21/21	PERMIT SET SUBMITTAL
	03/05/21	COA SUBMITTAL

Professional Certification - I certify that these documents were prepared or approved by me, and that i am a duly licensed Architect under the laws of the state of Washington, License number _____. Expiration date _____.

8628 REGISTERED ARCHITECT
Jenny Li
JENNY LI
STATE OF WASHINGTON

SDCI APPROVAL STAMP

©LINK DESIGN GROUP LLC.
All rights reserved. No part of this document may be reproduced in any form or by any means without permission in writing from LINK DESIGN GROUP LLC.

PROJECT NUMBER	20-0108A
PROJECT MANAGER	JX
DRAWN BY	DS, MB

Sheet Identification

CONCRETE DETAILS

A903

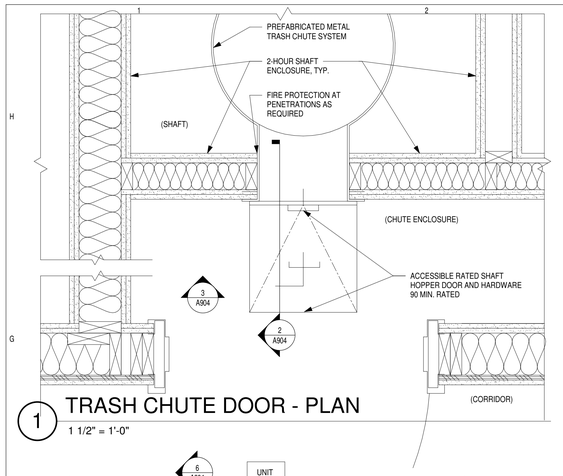

1 TRASH CHUTE DOOR - PLAN

1 1/2" = 1'-0"

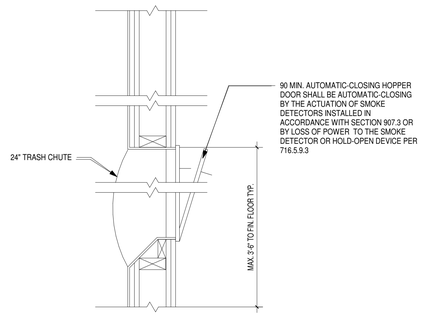

2 TRASH CHUTE DOOR - SECTION

1 1/2" = 1'-0"

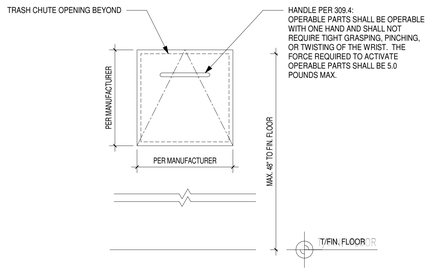

3 TRASH CHUTE DOOR - ELEVATION

1 1/2" = 1'-0"

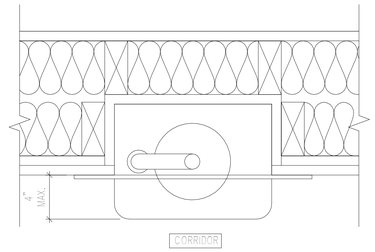

4 FIRE EXTINGUISHER - RECESSED

3" = 1'-0"

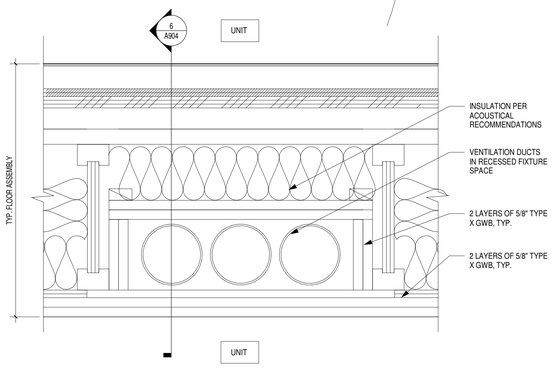

5 DUCT VENT AT FLOOR-CEILING ASSEMBLY

3" = 1'-0"

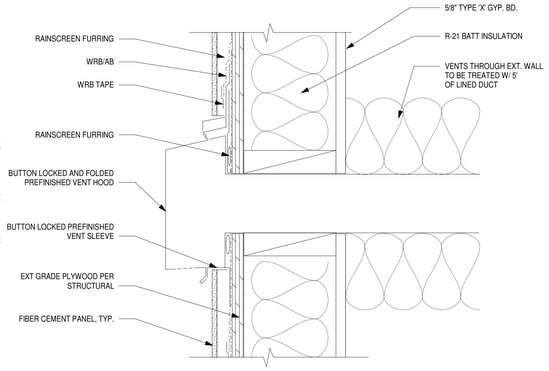

6 DUCT VENT AT EXTERIOR WALL

3" = 1'-0"

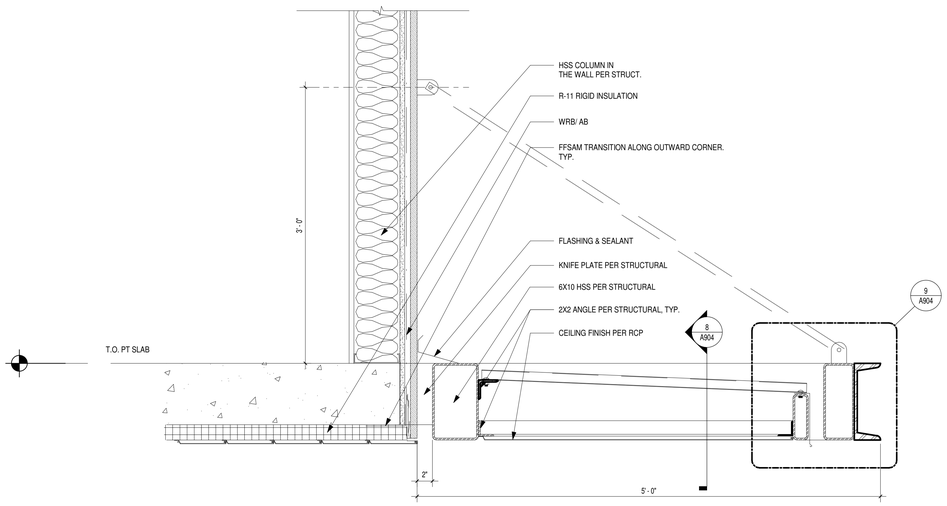

7 SOUTH CANOPY - SECTION

1 1/2" = 1'-0"

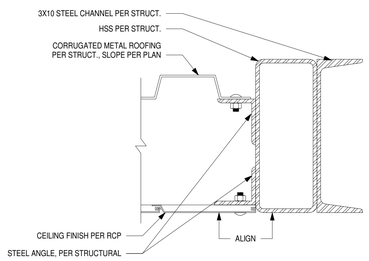

8 CANOPY EDGE DETAIL

3" = 1'-0"

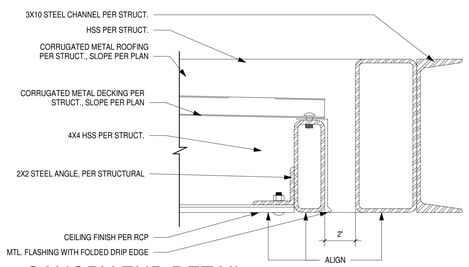

9 CANOPY END DETAIL

3" = 1'-0"

LINK

LINK DESIGN GROUP LLC.

439 Kirkland Way
Kirkland, WA. US. 98033
+1.425.298.0080

602 Pengjiang RD, E461 ShangHai, China 200072
上海市静安区彭江路602号E座461室 邮编 200072
+86.21.6667.0228

Project No: Enter Client Supplied Number XXXXXXXXXX

Client/Owner/Project Address

Owner
VIBRANT CITIES
606 Maynard Ave S
Suite 251
Seattle, WA 98104

Consultant

BLOSSOM APARTMENTS - COA SUBMITTAL

Issue Drawing Log

	09/04/20	INITIAL PRICING SET
	01/21/21	PERMIT SET SUBMITTAL
	03/05/21	COA SUBMITTAL

Professional Certification - I certify that these documents were prepared or approved by me, and that i am a duly licensed Architect under the laws of the state of Washington, License number _____, Expiration date _____.

8628 REGISTERED ARCHITECT
Jenny Li
JENNY LI
STATE OF WASHINGTON

SDCI APPROVAL STAMP

©LINK DESIGN GROUP LLC.
All rights reserved. No part of this document may be reproduced in any form or by any means without permission in writing from LINK DESIGN GROUP LLC.

PROJECT NUMBER	20-0108A
PROJECT MANAGER	JX
DRAWN BY	DS, MB

Sheet Identification

EXTERIOR DETAILS

A904

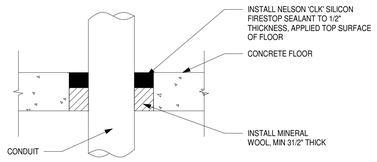

A. 3 HR FLOOR PENETRATION FIRESTOP DETAIL

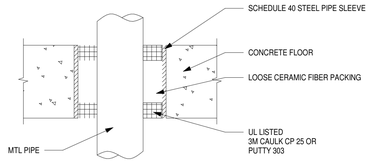

B. 3 HR FLOOR PENETRATION FIRESTOP DETAIL

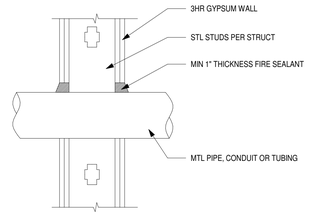

C. 3 HR THRU PENETRATION FIRESTOP DETAIL

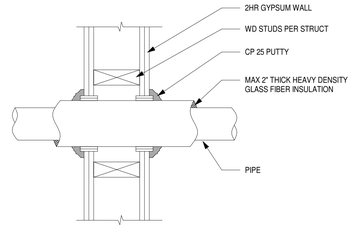

D. 2 HR THRU PENETRATION FIRESTOP DETAIL

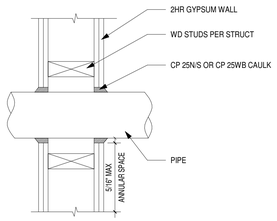

E. 2 HR THRU PENETRATION FIRESTOP DETAIL

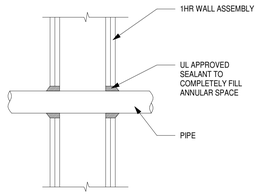

F. 1 HR THRU PENETRATION FIRESTOP DETAIL

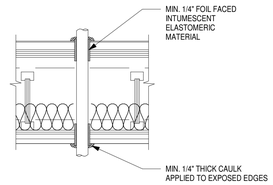

G. 1 HR THRU PENETRATION FIRESTOP DETAIL

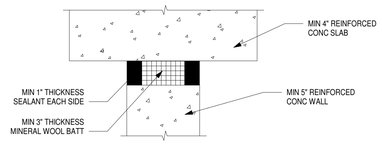

H. 3 HR JOINT FIRESTOP DETAIL

1 PIPE PENETRATION DETAILS

1 1/2" = 1'-0"

LINK

LINK DESIGN GROUP LLC.

439 Kirkland Way
Kirkland, WA. US. 98033
+1.425.298.0080

602 Pengjiang RD, E461 ShangHai, China 200072
上海市静安区彭江路602号E座461室 邮编 200072
+86.21.6667.0228

Project No: Enter Client Supplied Number
XXXXXXXXXX

Client/Owner/Project Address

Owner
VIBRANT CITIES
606 Maynard Ave S
Suite 251
Seattle, WA 98104

Consultant

BLOSSOM APARTMENTS - COA SUBMITTAL

-

Issue Drawing Log

	09/04/20	INITIAL PRICING SET
	01/21/21	PERMIT SET SUBMITTAL
	03/05/21	COA SUBMITTAL

Professional Certification - I certify that these documents were prepared or approved by me, and that i am a duly licensed Architect under the laws of the state of Washington, License number _____, Expiration date _____.

8628
REGISTERED ARCHITECT
Jenny Li
JENNY LI
STATE OF WASHINGTON

SDCI APPROVAL STAMP

©LINK DESIGN GROUP LLC.
All rights reserved. No part of this document may be reproduced in any form or by any means without permission in writing from LINK DESIGN GROUP LLC.

PROJECT NUMBER	20-0108A
PROJECT MANAGER	JX
DRAWN BY	DS, MB

Sheet Identification

EXTERIOR DETAILS

A905

SHORING STRUCTURAL NOTES

00100 - CODE REQUIREMENTS

ALL DESIGN AND CONSTRUCTION SHALL CONFORM TO THE 2015 INTERNATIONAL BUILDING CODE, AS AMENDED BY THE CITY OF SEATTLE.

00101 - EASEMENTS

ALL EASEMENTS, IF REQUIRED, SHALL BE THE RESPONSIBILITY OF THE OWNER.

00200 - DESIGN LOADS

DESIGN LOADS FOR THE SHORING SYSTEM ARE AS SPECIFIED IN THE GEOTECHNICAL REPORT:
PREPARED BY: PANGEO, INC.
REPORT NO. 20-161
DATED JULY 8, 2020

AND ARE AS INDICATED IN THE SHORING DESIGN PARAMETERS.

00201 – SHORING SYSTEM

THE SHORING SYSTEM IS TEMPORARY. TIEBACKS ARE TEMPORARY AND SHALL BE DE-TENSIONED ONCE THE BUILDING CONCRETE WALLS AND SLABS AS BRACES ARE COMPLETE WITH SLAB POST-TENSIONING AT THIS LEVEL FULLY STRESSED.

00300 – UTILITIES, ADJACENT PROPERTIES AND SPECIAL CONDITIONS

STABILITY AND EROSION PROTECTION OF EXISTING AND CUT SLOPES, AND THE COORDINATION OF THE EXCAVATION, SHORING AND OTHER WORK WITH ALL UTILITIES AND ADJACENT PROPERTIES SHALL BE THE RESPONSIBILITY OF THE CONTRACTOR.

ALL SIDE SEWERS CROSSING INTO THE EXCAVATION SHALL BE FIELD LOCATED PRIOR TO DRILLING AND EXCAVATION AND PERMANENTLY OR TEMPORARILY PLUGGED DURING CONSTRUCTION. ACTIVE SIDE SEWERS AND OTHER UTILITIES ON ADJACENT PROPERTY SHALL BE MAINTAINED IN OPERATING CONDITION DURING CONSTRUCTION. LOCATE AND DISCONNECT ALL UNDERGROUND POWER, COMMUNICATION, GAS AND WATER LINES CROSSING INTO THE EXCAVATION AREA PRIOR TO DRILLING AND EXCAVATION. CONTRACTOR SHALL VERIFY OVERHEAD CLEARANCES PRIOR TO MOBILIZATION AND CONSTRUCTION.

UTILITIES REFERENCED ON THE PLANS ARE FOR INFORMATIONAL PURPOSES ONLY. INDICATED UTILITY LOCATIONS ARE ESTIMATED BASED ON INFORMATION AVAILABLE AT THE TIME OF DESIGN. SEGMENTS OF ABANDONED UTILITIES TO BE REMOVED HAVE NOT BEEN SHOWN ON THE PLANS. THE CONTRACTOR SHALL POTHOLE OR USE OTHER MEANS TO VERIFY THE EXACT LOCATION, DEPTH OF BURRIAL (TOP AND BOTTOM OF UTILITY) AND WIDTH OF ALL UNDERGROUND UTILITIES OR STRUCTURES TO ENSURE ADEQUATE CLEARANCE FROM SOIL ANCHORS PRIOR TO SHORING AND TIEBACK INSTALLATION. THE TIEBACKS SHALL BE NO CLOSER THAN THREE FEET HORIZONTAL AND BELOW, AND FIVE FEET ABOVE ANY EXISTING UTILITY MAIN AND FACILITIES. HORIZONTAL LOCATION AND VERTICAL PROFILE FOR EACH UTILITY AND FACILITIES SHALL BE DETERMINED AT A MINIMUM OF EVERY 50 FEET ALONG THE UTILITY LINE AND AT EVERY JUNCTION STRUCTURE AND CHANGE OF ALIGNMENT.

A VIDEO INSPECTION AND RECORDING OF ALL EXISTING SEWER AND STORM LINES IN THE RIGHT OF WAY IS REQUIRED TO DOCUMENT THE CONDITION PRIOR TO (PRE-PROJECT CONDITION) AND UPON COMPLETION OF THE SHORING CONSTRUCTION. A COPY OF PRE-PROJECT CONDITION SHALL BE SENT TO SPU AT THE FOLLOWING ADDRESS: SPU_DWW_PIPE_REHAB@SEATTLE.GOV PRIOR TO THE PRECONSTRUCTION MEETING AND POST PROJECT CONDITION SHALL BE SENT UPON PROJECT COMPLETION TO THE SAME ADDRESS. THIS VIDEO SURVEY SHALL EXTEND IN THE ROW WITHIN 10 FEET (OR 20 FEET IF SUCH LINES ARE 30 FEET OR MORE OFF SITE PROPERTY LINE) OF ANY PROPOSED SHORING ELEMENT.

00301 - DRAINAGE CONTROL

THE CONTRACTOR SHALL TAKE MEASURES TO CONTROL ALL SURFACE WATER RUNOFF FLOW AND FLOWS FROM EXISTING SUBSURFACE DRAINAGE FEATURES INCLUDING PERCHED WATER. IN NO CASE SHALL THE CONTRACTOR ALLOW THE SHORING WALL SYSTEM TO BE EXPOSED TO HYDROSTATIC PRESSURES OR ALLOW SURFACE WATER TO FLOW INTO THE EXCAVATION.

00302 - GROUNDWATER

THE GEOTECHNICAL REPORT INDICATES THAT THE GROUNDWATER TABLE IS BELOW THE BOTTOM OF EXCAVATION ELEVATION AND LOCAL PERCHED GROUNDWATER MAY BE ENCOUNTERED. A DEWATERING SYSTEM, IF REQUIRED, SHALL BE INSTALLED AND SHALL COMMENCE AND BE IN OPERATION PRIOR TO SHORING WORK AND REMAIN IN OPERATION UNTIL DECOMMISSIONING IS APPROVED BY BOTH THE GEOTECHNICAL ENGINEER AND SHORING DESIGN ENGINEER. REFER TO THE GEOTECHNICAL REPORT.

00400 - PRE-CONSTRUCTION MEETING

A PRE-CONSTRUCTION MEETING WITH THE BUILDING OFFICIAL AND SEPARATE MEETING WITH THE DEPARTMENT OF TRANSPORTATION SHALL BE REQUIRED PRIOR TO THE START OF SHORING INSTALLATION. ATTENDEES SHALL INCLUDE REPRESENTATIVES OF THE OWNER, GENERAL CONTRACTOR, EXCAVATION AND SHORING SUBCONTRACTORS, THE GEOTECHNICAL ENGINEER, SURVEYORS, SHORING STRUCTURAL ENGINEER, ETC.

00401 - MONITORING AND QUALITY CONTROL

THE OWNER SHALL PROVIDE FULL TIME OBSERVATION MONITORING OF THE SHORING WALLS, ADJACENT GROUND SURFACES, MOVEMENT SENSITIVE UTILITIES, BUILDINGS AND STRUCTURES. MONITORING SHALL INCLUDE BOTH VERTICAL AND HORIZONTAL MOVEMENT. THE REQUIRED MONITORING SCHEDULE IS AS OUTLINED BELOW.

A VISUAL AND PHOTOGRAPHIC BASELINE SURVEY SHALL BE MADE OF ADJACENT BUILDINGS AND PAVEMENT PRIOR TO CONSTRUCTION.

A LICENSED SURVEYOR SHALL ESTABLISH BENCHMARKS AT THE DIRECTION OF THE GEOTECHNICAL ENGINEER AND SHALL SURVEY THESE MARKS PRIOR TO THE COMMENCEMENT OF EXCAVATION. ONCE THE SOLDIER PILES ARE IN PLACE, MONITORING POINTS SHALL BE ESTABLISHED AT THE TOP OF EVERY OTHER PILE. STATIONARY BENCH MARKS SHALL BE SET AT LEAST A DISTANCE UP TO THE WALL HEIGHT, H, BEHIND THE WALL FACE AT A SPACING NOT TO EXCEED 50 FEET ON CENTER. A BASELINE SURVEY SHALL BE PERFORMED BEFORE EXCAVATION COMMENCES. DISPLACEMENTS SHALL BE SURVEYED TWICE EVERY WEEK UNTIL THE PERMANENT STRUCTURE IS COMPLETED UP TO ADJACENT STREET GRADE AND SUCH TIME THAT THE PROJECT GEOTECHNICAL ENGINEER AND THE CITY DETERMINE NO FURTHER MOVEMENT WILL OCCUR. A LICENSED SURVEYOR HIRED BY THE OWNER (NOT THE CONTRACTOR) SHALL PERFORM THE SURVEY AT LEAST ONCE A WEEK.

AFTER THE SHORING SYSTEM HAS BEEN INSTALLED AND THE EXCAVATION IS COMPLETE, AND IF THE MONITORING DATA INDICATES NO OR LITTLE ADDITIONAL MOVEMENT, THE SURVEY FREQUENCY CAN BE DECREASED AS DETERMINED BY THE GEOTECHNICAL ENGINEER AND REVIEWED BY BUILDING OFFICIAL. SURVEYING SHALL CONTINUE UNTIL THE PERMANENT STRUCTURE (INCLUDING FLOOR SLABS AS BRACES) IS COMPLETED UP TO ADJACENT GRADES.

SURVEY REPORTS SHALL BE TRANSMITTED TO THE GEOTECHNICAL ENGINEER AND GENERAL CONTRACTOR WITHIN 24 HOURS OF SURVEY. WEEKLY REPORTS SHALL BE SUBMITTED TO THE GEOTECHNICAL ENGINEER, SHORING STRUCTURAL ENGINEER, GENERAL CONTRACTOR, CITY BUILDING DEPARTMENT AND CITY DOT FOR REVIEW. THE GEOTECHNICAL ENGINEER SHALL PROVIDE A GRAPHICAL REPRESENTATION OF WALL MOVEMENT VERSUS TIME TO THE CITY BUILDING DEPARTMENT AND CITY DOT. THE GEOTECHNICAL ENGINEER SHALL NOTIFY THE SHORING ENGINEER, THE GENERAL CONTRACTOR, CITY BUILDING DEPARTMENT AND CITY DOT, IMMEDIATELY AND DIRECTLY, IF ANY UNUSUAL OR SIGNIFICANTLY INCREASED MOVEMENT OCCURS.

THE SURVEYOR AND GENERAL CONTRACTOR SHALL NOTIFY THE GEOTECHNICAL ENGINEER OF RECORD AND SHORING STRUCTURAL ENGINEER IMMEDIATELY AND DIRECTLY IF MORE THAN 0.5 INCH OF DISPLACEMENT OCCURS. AT THAT TIME, THE GEOTECHNICAL ENGINEER AND SHORING DESIGN ENGINEER SHALL PREPARE A REMEDIAL PLAN. REMEDIAL MEASURES SHALL BE IMPLEMENTED IMMEDIATELY TO PREVENT DEFLECTIONS FROM EXCEEDING 1.0 INCH. FOR NORTH WALL SHORING IMMEDIATELY ADJACENT TO EXISTING STRUCTURES, THE LIMIT OF TOTAL MOVEMENT AT THE ELEVATION OF THE BOTTOM OF ADJACENT FOOTING IS 0.5 INCHES.

00405 – GEOTECHNICAL OBSERVATION, SPECIAL INSPECTION AND TESTING

CONTINUOUS OBSERVATION BY THE GEOTECHNICAL ENGINEER OR GEOTECHNICAL INSPECTOR IS REQUIRED FOR THE SHORING SYSTEM INSTALLATION INCLUDING DRILLING OF PILE HOLES, INSTALLATION OF SOLDIER PILES AND LEAN MIX PILE GROUT, TIEBACK INSTALLATION, GROUTING AND LOAD TESTING. A COMPLETE AND ACCURATE RECORD SHALL KEPT OF ALL PILE DEPTHS, QUANTITY OF STRUCTURAL AND/OR LEAN MIX GROUT PER PILE, AND ANY UNUSUAL CONDITIONS ENCOUNTERED. THE CONTRACTOR SHALL PROVIDE TESTING EQUIPMENT THAT HAS BEEN CALIBRATED IN THE PAST 60 DAYS. MEASUREMENTS OF ANCHOR MOVEMENT SHALL BE OBTAINED WITH EQUIPMENT ACCURATE TO 0.001 INCH.

SPECIAL INSPECTION SHALL BE PERFORMED BY A QUALIFIED SPECIAL INSPECTOR. SPECIAL INSPECTION IS REQUIRED FOR SHORING WELDING, IF ANY, TIEBACK GROUT STRENGTH AND CORROSION PROTECTION OF PERMANENT PILES. TESTING OF LEAN MIX GROUT IS NOT REQUIRED. REFERENCE THE SPECIAL INSPECTION AND TESTING SCHEDULE.

GROUT CUBE SAMPLES SHALL BE OBTAINED AND LABORATORY TESTED PRIOR TO ANCHOR TESTING.

00600 - MATERIALS

LEAN MIX GROUT	1 1/2 SACK MIX	
STRUCTURAL GROUT f'c = 3000 PSI (@ 5 DAYS), 9 SACK MIN. PUMPABLE, 8" MINIMUM SLUMP		
STRUCTURAL STEEL	WF SECTIONS	ASTM A992 Fy = 50 KSI
	CHANNELS	ASTM A36 Fy = 36 KSI
	STEEL ANGLES	ASTM A36 Fy = 36 KSI
	PLATE MATERIAL	ASTM A36 Fy = 36 KSI
	STRUCTURAL PIPE	ASTM A53 Fy = 35 KSI GRADE B
	STRUCTURAL HSS	ASTM A500 Fy = 42 KSI GRADE B
	STRUCTURAL BOLTS	ASTM A 325-N
	WELDED HEADED STUDS (WHS) ASTM A -108	
WELDING ELECTRODES E70-XX WITH CHARPY V-NOTCH TOUGHNESS OF AT LEAST 20 FT-LBS AT 0 DEGREES F.		
TIMBER LAGGING	HF NO. 2 4X12 TYPICAL UNO. RE. ELEVATION	
ANCHOR TENDONS	0.6 IN. DIA., 7-WIRE STRAND ASTM A416	
	LOW RELAXATION	Fy = 270 KSI Pu = 58.5 KIPS

TIMBER LAGGING SHALL BE PRESERVATIVE TREATED WITH WATER BORNE PRESERVATIVES IN ACCORDANCE WITH AWPA U1 (A OR F) TO A MINIMUM RETENTION OF 0.4 LBS/CU. FT. (0.21 LBS/CU. FT. FOR CA-B) ANY SAWN ENDS OF SUCH TREATED LAGGING SHALL BE FIELD TREATED WITH TWO BRUSHED COATS OF THE SAME PRESERVATIVE. LAGGING SHALL BE GAPPED PER THE GEOTECHNICAL ENGINEER TO PERMIT SEEPAGE.

DESIGN, FABRICATION AND ERECTION OF STRUCTURAL STEEL SHALL BE IN ACCORDANCE WITH THE AISC "STEEL CONSTRUCTION MANUAL AND THE SPECIFICATION FOR STRUCTURAL STEEL BUILDINGS", AISC 360 LATEST EDITION.

00601 - CORROSION PROTECTION

THE PILES AND TIEBACK ANCHORS FOR THIS BUILDING ARE TEMPORARY AND DO NOT REQUIRE CORROSION PROTECTION.

00602 - WELDING

WELDING SHALL CONFORM TO AWS D1.4-11 "STRUCTURAL WELDING CODE." WELDING ELECTRODES SHALL BE E70XX. ALL WELDING SHALL BE PERFORMED BY WABO AND AWS CERTIFIED WELDERS. ALL COMPLETE PENETRATION WELDS (CP) SHALL BE ULTRASONIC TESTED. ALL SINGLE PASS FILLET WELDS SHALL BE VISUALLY INSPECTED. MINIMUM WELD SIZE IS 1/4" CONTINUOUS FILLET.

00603 - SUBMITTALS

SUBMITTALS FOR THE FOLLOWING ITEMS SHALL BE SUBMITTED FOR REVIEW AND APPROVAL PRIOR TO FABRICATION AND INSTALLATION:

1. CONSTRUCTION SEQUENCE NARRATIVE & DESCRIPTION INCLUDING EQUIPMENT LIST AND KEY PERSONNEL.
2. LEAN GROUT AND STRUCTURAL GROUT MIX DESIGNS
3. STRUCTURAL STEEL AND EMBEDDED ITEMS.

00604 - EXCAVATION

THE DISPOSAL SITE FOR EXCAVATION SPOILS, INCLUDING FACILITY NAME AND ADDRESS SHALL BE PROVIDED TO THE BUILDING DEPARTMENT SITE DEVELOPMENT INSPECTOR AT THE PRECONSTRUCTION MEETING.

EXCAVATION SHALL PROCEED TO A DEPTH NO GREATER THAN 2'-0" BELOW THE ELEVATION OF ANY TIEBACK BEFORE STRESSING OF THAT AND ADJACENT TIEBACKS. LOCAL EXCAVATION AT A SOLDIER PILE IS ALLOWED TO A 2'-0" DEPTH AND A 2'-0" WIDTH AT THE TIEBACK FOR INSTALLATION. TIEBACK MUST BE INSTALLED AND STRESSED BEFORE MAKING A SIMILAR LOCAL EXCAVATION AT AN ADJACENT SOLDIER PILE.

INSTALLED ANCHORS SHALL BE APPROVED BY THE GEOTECHNICAL ENGINEER PRIOR TO PROCEEDING WITH EXCAVATION.

ANY VOIDS BETWEEN THE FACE OF THE EXCAVATION AND THE LAGGING SHALL BE FILLED IMMEDIATELY WITH A PERMEABLE, FREE DRAINING MATERIAL APPROVED BY THE GEOTECHNICAL ENGINEER. THIS SHALL INCLUDE CDF OR LEAN CONCRETE GROUT BEHIND THE UPPER TWO-THIRDS OF THE CUT FACE OF THE SHORING SYSTEM IF APPROVED BY THE GEOTECHNICAL ENGINEER. NO EXCAVATION FOR A LOWER LIFT SHALL PROCEED UNTIL THE INSTALLATION OF THE LIFT ABOVE IS COMPLETED, INCLUDING BACKFILLING BEHIND THE LAGGING.

THE CONTRACTOR SHALL LIMIT THE OPEN FACE OF THE EXCAVATION TO 4 FEET VERTICAL, UNLESS OTHERWISE APPROVED BY THE GEOTECHNICAL ENGINEER. THE CONTRACTOR SHALL EXCAVATE THE WALL FACE AND INSTALL THE TIMBER LAGGING IN SUCH A MANNER AS TO MAINTAIN A SAFE WORK AREA AND AVOID EXCESSIVE SLOUGHING, CAVING OR OVERBREAK. THE CONTRACTOR SHALL RESPONSIBLE FOR THE MEANS AND METHODS USED FOR TEMPORARY FACE STABILITY AND MEANS TO CONTROL EXCESSIVE OVERBREAK, AS APPROVED BY THE GEOTECHNICAL ENGINEER. EXCAVATION SHALL PROCEED TO A BOTTOM OF EXCAVATION (BOE) DEPTH NO GREATER THAN SHOWN ON THE PLANS.

00605 - SLOPE PROTECTION

THE CONTRACTOR SHALL PROTECT CUT SLOPES WITH PLASTIC IF CONSTRUCTION OCCURS DURING WET WEATHER. PLASTIC SHEETING SHALL BE OVERLAPPED AT LEAST 12 INCHES. SURFACE DRAINAGE AROUND THE EXCAVATION SHALL BE CONTROLLED BY THE CONTRACTOR TO PREVENT WATER FROM FLOWING INTO THE EXCAVATION. CUT SLOPES SHALL BE EXCAVATED TO INTERSECT THE BACKSIDE OF THE DRILLED HOLE.

CLEAR PLASTIC SHALL HAVE A MINIMUM THICKNESS OF 6 MIL AND SHALL MEET THE REQUIREMENTS OF WSDOT SPECIFICATION M41-10 SECTION 9-14.5.

CONTRACTOR SHALL MONITOR SLOPES FOR ANY SIGNS OF DISTRESS AND TAKE CORRECTIVE ACTIONS AS REQUIRED BY THE GEOTECHNICAL ENGINEER.

00700 - SOLDIER PILES

SOLDIER PILES SHALL BE INSTALLED IN HOLES SIZE PER ELEVATION AND SCHEDULE, AND BACKFILLED WITH LEAN MIX CONCRETE, TYPICAL U.N.O. REFER TO SHORING ELEVATIONS. ALL HOLES SHALL BE DRILLED IN AN ACCEPTABLE MANNER WITHOUT LOSS OF GROUND AND WITHOUT ENDANGERING PREVIOUSLY INSTALLED PILES TO THE GEOTECHNICAL ENGINEERS SATISFACTION.

SHOULD GROUNDWATER OR CAVING SOIL CONDITIONS BE ENCOUNTERED, TEMPORARY CASING OR OTHER APPROVED METHODS SHALL BE USED AS REQUIRED FOR PILE INSTALLATION TO KEEP THE SIDEWALLS OPEN WITHOUT SIGNIFICANT SLOUGHING OR CAVING. WHEN CASING HOLES ARE REQUIRED, THE CASING SHALL BE OF SUFFICIENT STRENGTH AND RIGIDITY TO WITHSTAND ALL INSTALLATION AND REMOVAL STRESSES, TO PREVENT DISTORTION CAUSED BY PLACING ADJACENT PILES AND TO PREVENT COLLAPSE DUE TO SOIL OR HYDROSTATIC PRESSURE.
ALTERNATE PILE PLACEMENT AT LEAST 24 HOURS TO ALLOW CONCRETE TO HARDENED PRIOR TO DRILLING ADJACENT PILES.

INSTALLATION TOLERANCES SHALL BE AS FOLLOWS:

PLAN DIRECTION	3 INCHES PARALLEL TO WALL
	1 INCH PERPENDICULAR TO WALL
VERTICAL DIRECTION	1 1/2% OF TOTAL LENGTH, 3 INCH MAXIMUM IN ELEVATION

THE GEOTECHNICAL INSPECTOR SHALL BE CONTINUOUSLY PRESENT DURING DRILLING OPERATION TO VERIFY THAT THE CONTRACTORS DRILLING METHOD AND PROCEDURES ARE APPROPRIATE FOR THE GROUND CONDITIONS.

ALL PILES, GROUT AND TIMBER LAGGING WITHIN THE CITY RIGHT-OF-WAY SHALL BE REMOVED TO A DEPTH OF 4 FEET BELOW THE FINISH GRADE AFTER THE SHORING IS NO LONGER REQUIRED FOR EXCAVATION STABILITY.

00701 - TIEBACK INSTALLATION

CASING OR AUGERCAST METHOD SHALL BE USED FOR PRIMARY GROUTING OF TIEBACK ANCHORS TO MINIMIZE GROUND LOSS SHOULD CAVING SOIL CONDITIONS BE ENCOUNTERED.

THE GEOTECHNICAL ENGINEER WILL OBSERVE ALL TIEBACK HOLES AND APPROVE THEM PRIOR TO TIEBACK AND GROUT INSTALLATION. DO NOT FORCE THE TIEBACK INTO THE HOLE.

TIEBACK ANCHORS SHALL ONLY HAVE THE BOND ZONE FILLED WITH STRUCTURAL GROUT. NO-LOAD ZONES SHALL BE IMMEDIATELY BACKFILLED WITH LEAN MIX CONCRETE TO PREVENT CAVING OF THE BORE HOLE.

SPACERS SHALL BE USED ALONG THE TIEBACK TENDON BOND LENGTH TO SEPARATE EACH OF THE STRANDS SO THAT THEY WILL BOND TO THE GROUT.

CENTRALIZERS SHALL BE PROVIDED TO ALLOW THE GROUT TO FLOW FREELY AND PROVIDE A MINIMUM OF 2 INCHES OF COVER OVER THE TENDON.

00900 – TIEBACK TESTING

PERFORMANCE TESTING (200%) SHALL BE PERFORMED AT LOCATIONS SELECTED BY THE GEOTECHNICAL ENGINEER AS NOTED BELOW. ALL OTHER PRODUCTION TIEBACKS SHALL BE PROOF TESTED (130%). ALL REQUIRED TEST DATA SHALL BE RECORDED BY THE GEOTECHNICAL INSPECTOR.

00901 - PERFORMANCE TIEBACK ANCHORS

THERE SHALL BE A MIMIMUM OF TWO PERFORMANCE (VERIFICTION) TIEBACK ANCHORS IN EACH TYPE OF SOIL ENCOUNTERED AS DETERMINED BY THE GEOTECHNICAL ENGINEER, AND NOT LESS THAN TWO PERFORMANCE (VERIFICATION) TIEBACK ANCHORS PER INSTALLATION METHOD.

TIEBACK PERFORMANCE / VERIFICATION TESTS (200% TESTS)

1. VERIFICATION TESTS SHALL BE PERFORMED ON EACH PERFORMANCE TIEBACK ANCHOR TO 200% OF THE DESIGN LOAD.
2. VERIFICATION TESTS SHALL NOT BE INITIATED UNTIL THE TIEBACK GROUT HAS ATTAINED AT LEAST 50 PERCENT OF THE SPECIFIED 28-DAY COMPRESSIVE STRENGTH.
3. THE TIEBACK ANCHOR SHALL BE SEATED BY APPLYING AN ALIGNMENT LOAD. THE ALIGNMENT LOAD SHALL BE BETWEEN 2% AND 10% OF THE DESIGN LOAD. THE LOAD SHALL THEN BE HELD AND A ZERO DEFLECTION READING TAKEN.
4. VERIFICATION TESTS SHALL BE PERFORMED BY INCREMENTALLY LOADING THE TIEBACK ANCHOR IN ACCORDANCE WITH THE SCHEDULE BELOW. THE TIEBACK ANCHOR MOVEMENT SHALL BE MEASURED, RECORDED TO THE NEAREST 0.001 INCH WITH RESPECT TO AN INDEPENDENT FIXED REFERENCE POINT AT THE ALIGNMENT LOAD AND AT EACH INCREMENT OF LOAD. THE SCHEDULE OF HOLD TIMES SHALL BE AS FOLLOWS:

AL	1 MINUTE
0.25 DL	10 MINUTES
0.50 DL	10 MINUTES
0.75 DL	10 MINUTES
1.00 DL	10 MINUTES
1.25 DL	10 MINUTES
1.50 DL	60 MINUTES
1.75 DL	10 MINUTES
2.00 DL	10 MINUTES
1.75 DL	UNTIL STABLE
1.50 DL	UNTIL STABLE
1.25 DL	UNTIL STABLE
1.00 DL	UNTIL STABLE
0.75 DL	UNTIL STABLE
0.50 DL	UNTIL STABLE
0.25 DL	UNTIL STABLE
AL	UNTIL STABLE

WHERE AL = ALIGNMENT LOAD
DL = DESIGN LOAD

THE LOAD-HOLD PERIOD SHALL START AS SOON AS THE LOAD IS APPLIED AND THE TIEBACK ANCHOR MOVEMENT SHALL BE MEASURED AND RECORDED AT EACH LOAD INCREMENT. THE APPLIED LOAD SHALL REMAIN CONSTANT DURING ALL HOLD LOAD PERIODS. (IE. NO MORE THAN 5% VARIATION FROM THE SPECIFIED LOAD.)

5. THE TIEBACK ANCHOR SHALL THEN BE UNLOADED AND LOCKED-OFF AT 90% TO 100% OF THE DESIGN LOAD.

00902 - ACCEPTANCE CRITERIA FOR PERFORMANCE TIEBACKS

ACCEPTANCE CRITERIA FOR PERFORMANCE / VERIFICATION TIEBACK TESTING SHALL INCLUDE THE FOLLOWING:

1. HOLD MAXIMUM PERFORMANCE / VERIFICATION TEST LOAD FOR REQUIRED DURATION WITH LESS THAN 0.08 INCH OF CREEP PER LOG CYCLE OF TIME.
2. LINEAR OR DECREASING CREEP MOVEMENT RATE.
3. TOTAL MOVEMENT DURING PERFORMANCE TEST LOADING, FROM 50 TO 200% DL, EXCEEDS 80% OF THEORETICAL ELASTIC ELONGATION OF UNBONDED TIEBACK LENGTH.
4. TOTAL MOVEMENT DURING VERIFICATION TEST LOADING, DOES NOT EXCEED THEORETICAL ELASTIC ELONGATION OF UNBONDED TIEBACK LENGTH PLUS 50% OF BOND LENGTH.
5. PERFORMANCE OF THE ANCHOR HEAD/PILE CONNECTION IS ACCEPTABLE TO THE SHORING STRUCTURAL ENGINEER.

FAILURE OF A TIEBACK ANCHOR TO MEET THE REQUIRED TEST ACCEPTANCE CRITERIA SHOULD BE IMMEDIATELY BE BROUGHT TO THE ATTENTION OF THE SHORING STRUCTURAL ENGINEER. IN MOST CASES, WHERE TOTAL MOVEMENT IS WITHIN TOLERABLE RANGES, A REDUCED CAPACITY WILL BE ASSIGNED TO THE SUBJECT TIEBACK AND ADDITONAL MONITORING WILL BE ADDED TO VERIFY THE TIEBACK'S PERFORMANCE. IF TOTAL ANCHOR MOVEMENT IS IN EXCESS OF 6 INCHES, THE ANCHOR WILL BE ABANDONED AND A REPLACEMENT REQUIRED. THE ACCEPTABILITY OF EACH ANCHOR SHALL DEPEND ON A REVIEW AND APPROVAL OF THE TEST BY THE GEOTECHNICAL ENGINEER.

00903 – PRODUCTION TIEBACK ANCHORS

ALL OTHER TIEBACK ANCHORS ARE PRODUCTION TIEBACK ANCHORS AND SHALL BE PROOF TESTED.

PROOF TESTS (130% TESTS)

1. PROOF TEST SHALL BE PERFORMED ON EACH PRODUCTION TIEBACK ANCHOR TO 130% OF THE DESIGN LOAD.
2. PROOF TESTS SHALL NOT BE INITIATED UNTIL THE TIEBACK GROUT HAS ATTAINED AT LEAST 50 PERCENT OF THE SPECIFIED 28-DAY COMPRESSIVE STRENGTH.
3. THE TIEBACK ANCHOR SHALL BE SEATED BY APPLYING AN ALIGNMENT LOAD. THE ALIGNMENT LOAD SHALL BE BETWEEN 2% AND 10% OF THE DESIGN LOAD. THE LOAD SHALL THEN BE HELD AND A ZERO DEFLECTION READING TAKEN.
4. PROOF TESTS SHALL BE PERFORMED BY INCREMENTALLY LOADING THE TIEBACK ANCHOR IN ACCORDANCE WITH THE SCHEDULE BELOW. THE TIEBACK ANCHOR MOVEMENT SHALL BE MEASURED, RECORDED TO THE NEAREST 0.001 INCH WITH RESPECT TO AN INDEPENDENT FIXED REFERENCE POINT IN THE SAME MANNER AS FOR THE VERIFICATION TESTS AT THE ALIGNMENT LOAD AND AT EACH INCREMENT OF LOAD. THE SCHEDULE OF HOLD TIMES SHALL BE AS FOLLOWS:

AL	1 MINUTE
0.25 DL	1 MINUTE OR UNTIL STABLE
0.50 DL	1 MINUTE OR UNTIL STABLE
0.75 DL	1 MINUTE OR UNTIL STABLE
1.00 DL	1 MINUTE OR UNTIL STABLE
1.30 DL	10 MINUTES

AL = ALIGNMENT LOAD
DL = DESIGN LOAD

THE MAXIMUM LOAD IN A PROOF TEST SHALL BE HELD FOR 10 MINUTES. THE LOAD HOLD PERIOD SHALL START AS SOON AS THE LOAD IS APPLIED AND THE ANCHOR MOVEMENT SHALL BE MEASURED AND RECORDED AT EACH LOAD INCREMENT. THE ANCHOR MOVEMENT BETWEEN 1 AND 10 MINUTES SHALL NOT EXCEED 0.04 INCHES PER LOG CYCLE OF TIME. IF THE ANCHOR MOVEMENT BETWEEN 1 AND 10 MINUTES EXCEEDS 0.04 INCHES, THE MAXIMUM LOAD SHALL BE HELD AN ADDITIONAL 50 MINUTES AND THE ANCHOR MOVEMENT SHALL BE RECORDED AT EACH 10 MINUTE INCREMENT OF HOLD PERIOD. IF AN ANCHOR FAILS IN CREEP DURING THE EXTENDED HOLD PERIOD, RETESTING SHALL NOT BE ALLOWED. THE APPLIED LOAD SHALL REMAIN CONSTANT DURING ALL HOLD PERIODS. (IE. NO MORE THAN 5% VARIATION FROM THE SPECIFIED LOAD.)

5. THE TIEBACK ANCHOR SHALL BE UNLOADED AND LOCKED-OFF AT 90% TO 100% OF THE DESIGN LOAD.

00904 - ACCEPTANCE CRITERIA FOR PRODUCTION TIEBACKS

ACCEPTANCE CRITERIA FOR PROOF TIEBACK TESTING SHALL INCLUDE THE FOLLOWING:

1. HOLD MAXIMUM PROOF TEST LOAD FOR REQUIRED DURATION WITH LESS THAN 0.04 INCH OF CREEP PER LOG CYCLE OF TIME.
2. LINEAR OR DECREASING CREEP MOVEMENT RATE.
3. TOTAL MOVEMENT DURING PROOF TEST LOADING, FROM 50 TO 130% DESIGN LOAD, EXCEEDS 80% OF THEORETICAL ELASTIC ELONGATION OF UNBONDED TIEBACK LENGTH.
4. TOTAL MOVEMENT DURING PROOF TEST LOADING, DOES NOT EXCEED THEORETICAL ELASTIC ELONGATION OF UNBONDED TIEBACK LENGTH PLUS 50% OF BOND LENGTH.
5. PERFORMANCE OF THE ANCHOR HEAD/PILE CONNECTION IS ACCEPTABLE TO THE SHORING STRUCTURAL ENGINEER.

FAILURE OF A TIEBACK ANCHOR TO MEET THE REQUIRED TEST ACCEPTANCE CRITERIA SHOULD BE IMMEDIATELY BE BROUGHT TO THE ATTENTION OF THE SHORING STRUCTURAL ENGINEER. IN MOST CASES, WHERE TOTAL MOVEMENT IS WITHIN TOLERABLE RANGES, A REDUCED CAPACITY WILL BE ASSIGNED TO THE SUBJECT TIEBACK AND ADDITONAL MONITORING WILL BE ADDED TO VERIFY THE TIEBACK'S PERFORMANCE. IF TOTAL TIEBACK MOVEMENT IS IN EXCESS OF 6 INCHES, THE ANCHOR WILL BE ABANDONED AND SHALL BE REPLACED BY THE CONTRACTOR. THE ACCEPTABILITY OF EACH ANCHOR SHALL DEPEND ON A REVIEW AND APPROVAL OF THE TEST BY THE GEOTECHNICAL ENGINEER.

CALL 48 HOURS
BEFORE YOU DIG
1-800-424-5555

Utility Conflict Note

CAUTION:

THE CONTRACTOR SHALL BE RESPONSIBLE FOR VERIFYING THE LOCATION, DIMENSION, AND DEPTH OF ALL EXISTING UTILITIES WHETHER SHOWN ON THESE PLANS OR NOT BY POTHOLING THE UTILITIES AND SURVEYING THE HORIZONTAL AND VERTICAL LOCATION PRIOR TO CONSTRUCTION. THIS SHALL INCLUDE CALLING UTILITY LOCATE AT 1-800-424-5555 AND THEN POTHOLING ALL OF THE EXISTING UTILITIES AT LOCATIONS OF NEW UTILITY CROSSINGS TO PHYSICALLY VERIFY WHETHER OR NOT CONFLICTS EXIST. LOCATIONS OF SAID UTILITIES AS SHOWN ON THESE PLANS ARE BASED UPON THE UNVERIFIED PUBLIC INFORMATION AND ARE SUBJECT TO VARIATION. RESOLVE ANY PROBLEMS PRIOR TO PROCEEDING WITH CONSTRUCTION.

Structural Drawing List (Shoring)

SHEET	DESCRIPTION	Issued	Rev	Rev Date
SS1.0	Shoring Notes	01/21/21		
SS1.1	Shoring Notes	01/21/21		
SS2.0	Shoring Plan	01/21/21		
SS3.0	Elevations and Details	01/21/21		
SS3.1	Elevations and Details	01/21/21		
SS4.0	Details	01/21/21		
SS4.1	Sections	01/21/21		

FOR SEATTLE DPD USE ONLY

CT ENGINEERING INC.
Structural Engineers
1601 Nickerson Street Suite 302 Seattle, WA 98109
206.285.4512 (V) 206.285.0618 (F)
www.ctengineering.com

01/21/21

No.	REVISION	DATE

JOB #: 20021
ENG: CTE
CAD: CTE
SCALE:

KEY ISSUE DATES:

PERMIT: 01/21/2021

Shoring Notes
BLOSSOM APARTMENTS SHORING
214-220 5TH Avenue S
Seattle, WA 98104

SS1.0

1/21/2021 11:14:12 AM
C:\Users\BWyble\Documents\20021 - Blossom Apt Shoring - v20_BWyble.rvt

ABBREVIATIONS

&	AND
@	AT
'	FEET (FOOT)
"	INCH (INCHES)
#	POUND(S), NUMBER
=	EQUAL(S)
A.B.	ANCHOR BOLT
ABV.	ABOVE
ADD.	ADDITIONAL
ADJ.	ADJACENT
ALUM.	ALUMINUM
ALT.	ALTERNATE
APPROX.	APPROXIMATE(LY)
ARCH.	ARCHITECT(URAL)
ASSY.	ASSEMBLY
B. (BTM.)	BOTTOM
BEL.	BELOW
BEN	BOUNDARY EDGE NAILING
B.F.	BRACED FRAME
BLDG.	BUILDING
BLK.(G.)	BLOCK (ING)
BLW.	BELOW
BM.	BEAM
BMU	BRICK MASONRY UNIT
BN	BOUNDARY NAILING
BNDRY.	BOUNDARY
B.O.	BOTTOM OF
B.O.E.	BOTTOM OF EXCAVATION
B.O.F.	BOTTOM OF FOOTING
BRDG.	BRIDGE, BRIDGING
BRG.	BEARING
BTWN.	BETWEEN
C	CAMBER
CAMB.	CAMBER(ED)
CANT.	CANTILEVER(ED)
CF	CUBIC FOOT
C.I.P.	CAST IN PLACE
C.J.	CONSTRUCTION JOINT
CL	CENTER LINE
CLG.	CEILING
CLR.	CLEAR
COL.	COLUMN
CONC.	CONCRETE
CONN.	CONNECTION
CONST.	CONSTRUCTION
CONT.	CONTINUOUS
CTSK.	COUNTERSINK
CTR.	CENTER(ED)
CY	CUBIC YARD
CMU	CONCRETE MASONRY UNIT
d	PENNY (NAILS)
DB	DROPPED BEAM
DBA	DEFORMED BAR ANCHORS
DBL.	DOUBLE
DCW	DEMAND CRITICAL WELD
DEPT.	DEPARTMENT
DET.	DETAIL
DF	DOUGLAS FIR
DIA. / Ø	DIAMETER
DIAG.	DIAGONAL
DIAPH.	DIAPHRAGM
DIM.	DIMENSION
DN.	DOWN
D.O.	DITTO (REPEAT)
DP.	DEEP
D.S.	DRAG STRUT
DWG.	DRAWING(S)
DWL.	DOWELS(S)
(E)	EXISTING
EA.	EACH
E.E.	EACH END
E.F.	EACH FACE
E.J.	EXPANSION JOINT
EL.	ELEVATION
ELEV.	ELEVATOR
EMBD.	EMBED(MENT)
EN	EDGE NAIL
ENG.	ENGINEER
EQ.	EQUAL
EQPT.	EQUIPMENT
E.W.	EACH WAY
EXP.	EXPANSION

ABBREVIATIONS

EXST.	EXISTING
EXT.	EXTERIOR
FAB.	FABRICATION
FB	FLUSH BEAM
FDN.	FOUNDATION
F.F.	FINISH FLOOR
FIN.	FINISH(ED)
FLG.	FLANGE
FLR.	FLOOR
FN	FIELD (FACE) NAIL
F.O.	FINISHED OPENING
F.O.C.	FACE OF CONCRETE
F.O.M.	FACE OF MASONRY
F.O.S.	FACE OF STUD
F.O.W.	FACE OF WALL
FRM.	FRAME (FRAMING)
F.S.	FAR SIDE
FT.	FEET (FOOT)
FRTW	FIRE RETARDANT TREATED WOOD
FTG.	FOOTING
GA.	GAUGE
GALV.	GALVANIZE(D)
GB.	GRADE BEAM
GLB	GLUE LAMINATED BEAM
GRD.	GRADE
GWB	GYPSUM WALLBOARD
GYP.	GYPCRETE
HD	HOLDOWN
H.D.G.	HOT DIPPED GALVANIZED
HGR.	HANGER
HORIZ.	HORIZONTAL
HR	HEADER
H.S.B.	HIGH STRENGTH BOLT
HT.	HEIGHT
I.D.	INSIDE DIAMETER
I.E.	INVERT ELEVATION
I.F.	INSIDE FACE
IN.	INCH(ES)
INFO.	INFORMATION
INT.	INTERIOR
JST.	JOIST
JT.	JOINT
K	KIPS (1000 LB.)
LAT.	LATERAL
LB.	POUND(S)
L.B.	LAG BOLTS(S)
LG.	LONG(ITUDINAL)
LGTH.	LENGTH
LGMF.	LIGHT GAUGE METAL FRAMING
LLH	LONG LEG HORIZONTAL
LLV	LONG LEG VERTICAL
LSH	LONG SLOTTED HOLE(S)
L.W.	LIGHT WEIGHT
MAT.	MATERIAL
MAX.	MAXIMUM
M.B.	MACHINE BOLT
MBM	METAL BUILDING MANUFACTURER
MECH.	MECHANICAL
M.E.J.	MASONRY EXPANSION JOINT
MEZZ.	MEZZANINE
MFR.	MANUFACTURER
MIN.	MINIMUM
MISC.	MISCELLANEOUS
MTL.	METAL
N.L.B.	NON-LOAD BEARING
NO.	NUMBER
N.S.	NEAR SIDE
N.T.S.	NOT TO SCALE
N.W.C.	NORMAL WEIGHT CONCRETE
O.C.	ON CENTER
O.D.	OUTSIDE DIAMETER
O.F.	OUTSIDE FACE
O.H.	OPPOSITE HAND
OPNG.	OPENING
OPP.	OPPOSITE
ORNT.	ORIENTATION

ABBREVIATIONS

OSB	ORIENTED STRAND BOARD
O.W.J.	OPEN WEB JOIST
PAR.	PARALLEL
P/C	PRECAST
PEN	PANEL EDGE NAIL
PERP.	PERPENDICULAR
PL.	PLATE
PL	PROPERTY LINE
PLMBG.	PLUMBING
PLYWD.	PLYWOOD
PSF	POUNDS PER SQUARE FOOT
PSI	POUNDS PER SQUARE INCH
P.T.	PRESERVATIVE TREATED
PT	POST TENSION(ED)
QTY.	QUANTITY
R. (RAD.)	RADIUS
RE: (REF.)	REFERENCE
REINF.	REINFORCEMENT
REQ.	REQUIRED
R.F.	RIGID FRAME
R.O.	ROUGH OPENING
R.S.	ROUGH SAWN
SCH.	SCHEDULE
SCHED.	SCHEDULE
SCL	STRUCTURAL COMPOSITE WOOD
SHT.	SHEET
SIM.	SIMILAR
S.J.	SHRINKAGE CONTROL JOINT
SKW.	SKEW(ED)
S.O.G.	SLAB ON GRADE
SPC.	SPACE(S) (ING)
SPEC.	SPECIFICATION(S)
SQ.	SQUARE
STD.	STANDARD
STGR.	STAGGER
STIFF.	STIFFENER(S)
STIR.	STIRRUP(S)
STL.	STEEL
STRUC.	STRUCTURAL
STRUCT.	STRUCTURAL
SUSP.	SUSPENDED(TION)
SYMM.	SYMMETRICAL
T.	TOP
T.&B.	TOP AND BOTTOM
TEMP.	TEMPORARY
T.&G.	TONGUE AND GROOVE
THK.	THICK(NESS)
THRD.	THREADED
TN	TOE NAIL
T.O.S.	TOP OF (STEEL) (SHEATHING) (SLAB)
T.O.W.	TOP OF WALL
TRANSV.	TRANSVERSE
TYP.	TYPICAL
U.N.O.	UNLESS NOTED OTHERWISE
U/S	UNDERSIDE
V.	VERTICAL
VERT.	VERTICAL
VIF	VERIFY IN FIELD
W.	WIDE (WIDTH)
W/	WITH
W/O	WITHOUT
WD.	WOOD
W.H.S.	WELDED HEADED STUDS
W.P.	WORK POINT
W.S.	WELDED STUD
WT.	WEIGHT
W.W.F.	WELDED WIRE FABRIC
X-STG	EXTRA STRONG
XX-STG	DOUBLE EXTRA STRONG
YD	YARD

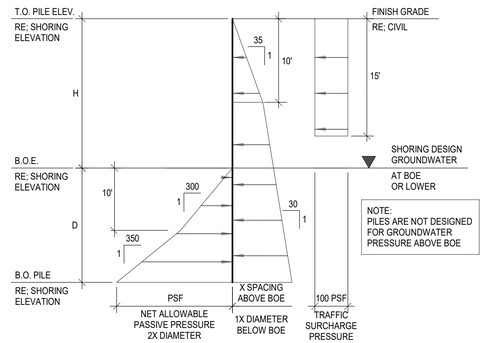

TEMPORARY SOLDIER PILE WALL WITH MULTIPLE TIEBACKS

SCALE:NO SCALE

2

DESIGN LATERAL PRESSURES

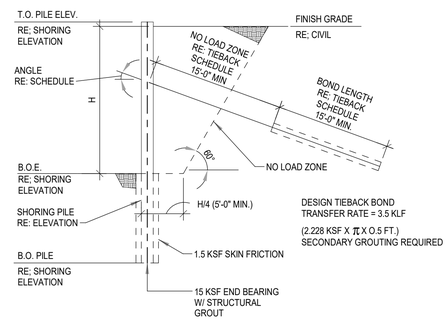

SCALE:NO SCALE

3

TIEBACK PARAMETERS

SPECIAL INSPECTIONS, TESTING and GEOTECHNICAL OBSERVATION SCHEDULE

INSPECTION ITEMS	CONTINUOUS	PERIODIC	TESTING	COMMENTS
SOIL AND FOUNDATIONS (IBC 1705.6)				
SITE PREPARATION, EXCAVATION AND GRADING		X		GEOTECH
DEWATERING				GEOTECH
SOLDIER PILES	X			GEOTECH
TIEBACK SYSTEM	X		X	GEOTECH
INTERNAL BRACING SYSTEM	X			GEOTECH
SUBSURFACE DRAINAGE				
FILL PLACEMENT AND COMPACTION	X			GEOTECH
FIELD VERIFICATION OF BEARING CAPACITY		X		GEOTECH
CORROSION PROTECTION (N/A)		N/A		GEOTECH
CONCRETE CONSTRUCTION (IBC 1705.3 AND 1705.12.1)				
REINFORCEMENT		X		
EMBEDDED ITEMS		X		
PREPARATION OF TEST SPECIMENS		X	X	
CONCRETE AND / OR SHOTCRETE PLACEMENT	X		X	NOTE 8
WELDING (IBC 1705.2.1 AND AWS D1.1)				NOTE 4
COMPLETE AND PARTIAL PENETRATION	X		X	NOTE 5
MULTIPASS FILLET WELD	X			
SINGLE-PASS FILLET > 5/16"	X			
SINGLE-PASS FILLET ≤ 5/16"		X		
WELDED HEADED STUDS AND DBA		X		NOTE 6

INSPECTION SCHEDULE NOTES:

1. ITEMS MARKED WITH AND "X" SHALL BE INSPECTED IN ACCORDANCE WITH IPC CHAPTER 17 BY A CERTIFIED SPECIAL INSPECTOR FROM AN AGENCY APPROVED BY THE JURISDICTION.
2. SPECIAL INSPECTION SHALL NOT BE REQUIRED FOR WORK IN AN APPROVED FABRICATOR'S PER IBC 1704.2.5.2. VERIFY APPROVAL WITH JURISDICTION PRIOR TO FABRICATION.
3. CONTINUOUS SPECIAL INSPECTION REQUIRES THE INSPECTOR SHALL BE ONSITE AT ALL TIMES AND THAT WORK REQUIRING SPECIAL INSPECTION IS PERFORMED. PERIODIC SPECIAL INSPECTION SHALL ALLOW INSPECTION AT THE INTERVALS NECESSARY TO CONFORM THAT WORK REQUIRING SPECIAL INSPECTION IS IN COMPLIANCE WITH THE REQUIREMENTS.
4. ALL WELDS SHALL BE VISUALLY INSPECTED.
5. ALL COMPLETE PENETRATION WELDS SHALL BE TESTED ULTRASONICALLY.
6. PERIODIC SPECIAL INSPECTION SHALL BE ALLOWED FOR SHOP WELDING OF ASTM A706 REINFORCEMENT NO. 5 OR SMALLER USED FOR EMBEDDED ITEMS, PROVIDED THAT; THE MATERIALS AND THE QUALIFICATIONS OF WELDING PROCEDURES AND WELDERS ARE VERIFIED PRIOR TO THE START OF WORK, THAT PERIODIC INSPECTIONS ARE MADE OF WORK IN PROGRESS, AND THAT A VISUAL INSPECTION OF ALL WELDS IS MADE PRIOR TO SHIPMENT OF SHOP WELDED ITEMS.
7. THE SPECIAL INSPECTOR SHALL PROVIDE THE BUILDING OFFICIAL, OWNER, ARCHITECT, ENGINEER OF RECORD, AND CONTRACTOR WITH COPIES OF ALL REPORTS AND TEST RESULTS (IBC 1704.2.4).
8. REFERENCE BUILDING STRUCTURAL DRAWINGS FOR REQUIREMENTS AT BUILDING. THIS SCHEDULE COVERS SHORING ONLY.

CALL 48 HOURS
BEFORE YOU DIG
1-800-424-5555

Utility Conflict Note

CAUTION:

THE CONTRACTOR SHALL BE RESPONSIBLE FOR VERIFYING THE LOCATION, DIMENSION, AND DEPTH OF ALL EXISTING UTILITIES WHETHER SHOWN ON THESE PLANS OR NOT BY POTHOLING THE UTILITIES AND SURVEYING THE HORIZONTAL AND VERTICAL LOCATION PRIOR TO CONSTRUCTION. THIS SHALL INCLUDE CALLING UTILITY LOCATE AT 1-800-424-5555 AND THEN POTHOLING ALL OF THE EXISTING UTILITIES AT LOCATIONS OF NEW UTILITY CROSSINGS TO PHYSICALLY VERIFY WHETHER OR NOT CONFLICTS EXIST. LOCATIONS OF SAID UTILITIES AS SHOWN ON THESE PLANS ARE BASED UPON THE UNVERIFIED PUBLIC INFORMATION AND ARE SUBJECT TO VARIATION. RESOLVE ANY PROBLEMS PRIOR TO PROCEEDING WITH CONSTRUCTION.

FOR SEATTLE DPD USE ONLY

CT ENGINEERING INC.
Structural Engineers
160 Nickerson Street Suite 302, Seattle, WA 98109
206.285.4512 (V) 206.285.0818 (F)
www.ctengineering.com

01/21/21

No.	REVISION	DATE

JOB #: 20021
ENG: CTE
CAD: CTE
SCALE: NO SCALE
KEY ISSUE DATES:
PERMIT: 01/21/2021

Shoring Notes
BLOSSOM APARTMENTS SHORING
214-220 5TH Avenue S
Seattle, WA 98104

SS1.1

1/21/2021 11:14:13 AM
C:\Users\BWyble\Documents\20021 - Blossom Apt Shoring - v20_BWyble.rvt

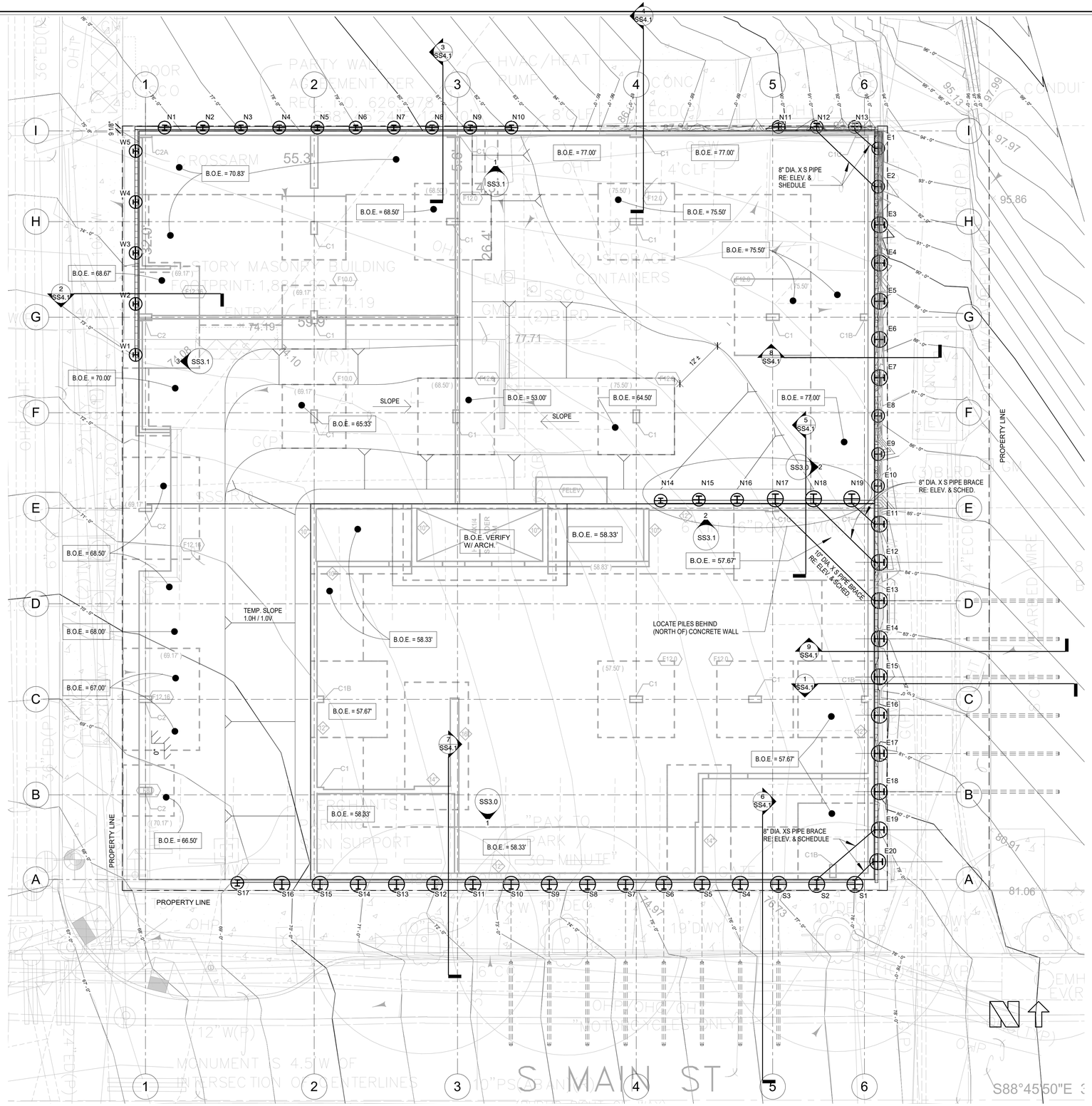

Shoring Notes

1. VERIFY ALL DIMENSIONS WITH ARCHITECT PRIOR TO CONSTRUCTION. RE: ARCHITECT FOR GRID TO FACE OF SHORING. SEE WALL ELEVATIONS FOR SHORING LAYOUT TO GRIDS.
2. A PRECONSTRUCTION MEETING WITH THE CITY DOT (IN ADDITION TO THOSE REQUIRED BY THE BUILDING DEPARTMENT) SHALL BE REQUIRED PRIOR TO START OF CONSTRUCTION. THE OWNER, GENERAL CONTRACTOR, EXCAVATION AND SHORING SUBCONTRACTORS, GEOTECHNICAL ENGINEER, SURVEYOR AND SHORING DESIGNER SHALL BE IN ATTENDANCE. GENERAL CONTRACTOR SHALL COORDINATE MEETING TIME WITH ATTENDEES AND CITY DOT.
3. ALL EXISTING UTILITIES, I.E., OVERHEAD POWER, COMMUNICATION LINES, ETC., AS WELL AS ALL UNDERGROUND UTILITIES SHALL BE FIELD LOCATED AND PROTECTED THROUGHOUT CONSTRUCTION.
4. ALL EXISTING STORM, SEWER, GAS, ETC., LINES CROSSING INTO THE EXCAVATION SHALL BE FIELD LOCATED AND REROUTED OR CAPPED PRIOR TO INSTALLATION OF THE SHORING. POTHOLE TO VERIFY LOCATION OF UNDER SIDEWALK POWER AND PHONE.
5. ALL SHORING ELEMENTS IN THE ROW SHALL BE REMOVED TO A DEPTH OF AT LEAST 4 FEET BELOW FINISHED GRADE IN THE ROW ONCE THEY ARE NO LONGER NEEDED FOR CONSTRUCTION.
6. CONTRACTOR SHALL NOT STOCK PILE MATERIALS AND/OR EQUIPMENT ALONG THE TOP OF SHORING WALL THAT EXCEEDS 250 PSF U.N.O.. ALL LOADS SHALL BE REVIEWED BY THE GEOTECHNICAL ENGINEER AND SHORING DESIGNER PRIOR TO PLACEMENT. RE: CONSTRUCTION LOADING SECTION SHEET SS4.1.

Utility Conflict Note

CAUTION:

THE CONTRACTOR SHALL BE RESPONSIBLE FOR VERIFYING THE LOCATION, DIMENSION, AND DEPTH OF ALL EXISTING UTILITIES WHETHER SHOWN ON THESE PLANS OR NOT BY POTHOLING THE UTILITIES AND SURVEYING THE HORIZONTAL AND VERTICAL LOCATION PRIOR TO CONSTRUCTION. THIS SHALL INCLUDE CALLING UTILITY LOCATE AT 1-800-424-5555 AND THEN POTHOLING ALL OF THE EXISTING UTILITIES AT LOCATIONS OF NEW UTILITY CROSSINGS TO PHYSICALLY VERIFY WHETHER OR NOT CONFLICTS EXIST. LOCATIONS OF SAID UTILITIES AS SHOWN ON THESE PLANS ARE BASED UPON THE UNVERIFIED PUBLIC INFORMATION AND ARE SUBJECT TO VARIATION. RESOLVE ANY PROBLEMS PRIOR TO PROCEEDING WITH CONSTRUCTION.

CALL 48 HOURS
BEFORE YOU DIG
1-800-424-5555

GRAPHIC SCALE

-8' 0' 4' 8' 16'

(1/8" : 1'-0")

SCALE: 1/8" = 1'-0"

1 SHORING PLAN

FOR SEATTLE DPD USE ONLY

CT ENGINEERING INC.
Structural Engineers
160 Nickerson Street Suite 302 Seattle, WA 98109
206.285.4512 (V) 206.285.0818 (F)
www.ctengineering.com

01/21/21

No.	REVISION	DATE

JOB #: 20021
ENG: CTE
CAD: CTE
SCALE: 1/8" = 1'-0"

KEY ISSUE DATES:

PERMIT: 01/21/2021

Shoring Plan

BLOSSOM APARTMENTS SHORING
214-220 5TH Avenue S
Seattle, WA 98104

SS2.0

1/21/2021 11:14:14 AM
C:\Users\BWyble\Documents\20021 - Blossom Apt Shoring - v20_BWyble.rvt

TEMPORARY PILE AND TIEBACK SCHEDULE - SOUTH WALL

SOLDIER PILE NUMBER	PILE SIZE	HOLE DIAMETER (INCHES)	T.O.P. ELEVATION (FEET)	B.O.P. ELEVATION (FEET)	TIEBACK ELEVATION (FEET)	TIEBACK ANGLE (DEGREES)	TIEBACK FORCE (KIPS)	BOND LENGTH (FEET)	TOTAL LENGTH (FEET)
S1	W18X65	30	79.0	47.5	70.0		CORNER BRACE RE: PLAN		
S2	W18X65	30	78.5	47.5	70.0		CORNER BRACE RE: PLAN		
S3	W18X65	30	78.0	47.5	67.0	30	48.3	15	30.0
S4	W18X65	30	77.0	47.5	67.0	30	48.3	15	30.0
S5	W18X65	30	76.5	48.0	66.0	30	44.5	15	30.0
S6	W18X65	30	76.0	48.0	66.0	30	44.5	15	30.0
S7	W18X65	30	75.5	48.0	65.0	30	43.0	15	30.0
S8	W18X65	30	75.0	48.0	65.0	30	43.0	15	30.0
S9	W18X65	30	74.5	48.0	64.5	30	40.0	15	30.0
S10	W18X65	30	74.0	48.0	64.0	30	40.0	15	30.0
S11	W18X97	30	73.5	42.5			CANTILEVER		
S12	W18X97	30	73.0	42.5			CANTILEVER		
S13	W18X65	30	72.0	43.0			CANTILEVER		
S14	W18X65	30	71.5	43.0			CANTILEVER		
S15	W18X65	30	71.0	43.0			CANTILEVER		
S16	W18X65	30	70.5	43.0			CANTILEVER		
S17	W12X40	24	70.0	50.0			CANTILEVER		

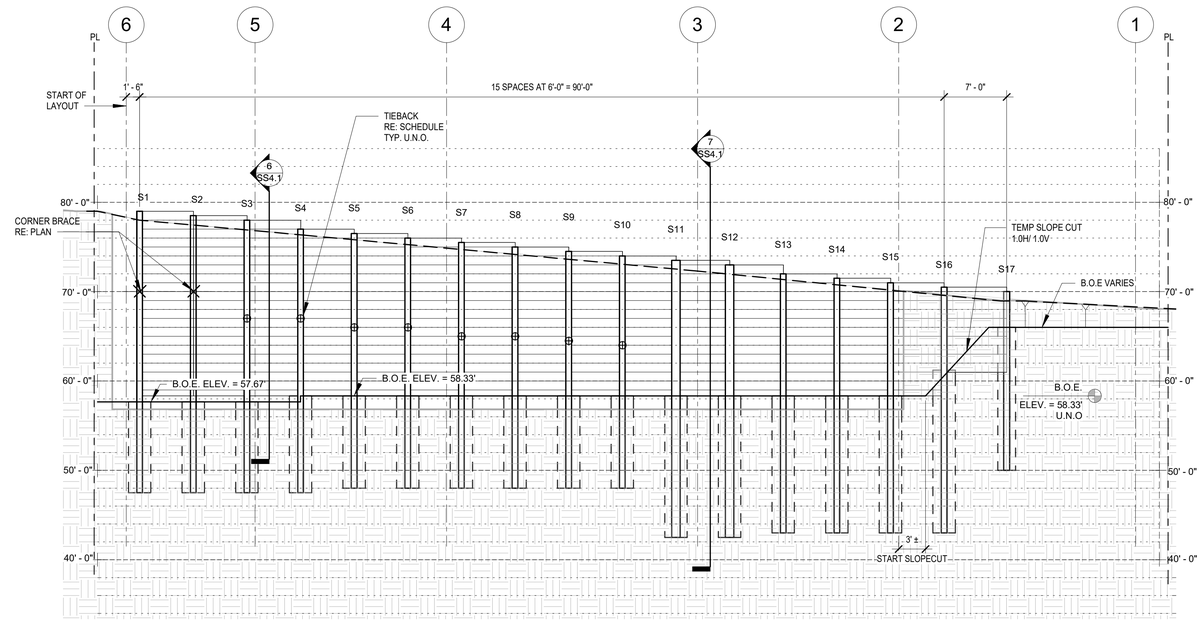

SCALE: 1/8" = 1'-0"

1 SOUTH ELEVATION

TEMPORARY PILE AND TIEBACK SCHEDULE - EAST WALL

SOLDIER PILE NUMBER	PILE SIZE	HOLE DIAMETER (INCHES)	T.O.P. ELEVATION (FEET)	B.O.P. ELEVATION (FEET)	TIEBACK ELEVATION (FEET)	TIEBACK ANGLE (DEGREES)	TIEBACK FORCE (KIPS)	BOND LENGTH (FEET)	TOTAL LENGTH (FEET)
E1	W14X82	24	93.0	65.0	85.0		CORNER BRACE RE: PLAN		
E2	W14X82	24	92.5	65.0	85.0		CORNER BRACE RE: PLAN		
E3	W18X143	30	92.0	58.5			CANTILEVER		
E4	W18X143	30	91.0	58.5			CANTILEVER		
E5	W18X143	30	90.0	58.5			CANTILEVER		
E6	W18X143	30	89.0	58.5			CANTILEVER		
E7	W18X143	30	88.0	58.5			CANTILEVER		
E8	W14X68	24	87.5	62.5			CANTILEVER		
E9	W14X68	24	87.0	62.5			CANTILEVER		
E10	W14X68	24	86.0	62.5			CANTILEVER		
E11	W18X106	30	85.5	47.5	74.0		CORNER BRACE RE: PLAN		
E12	W18X106	30	85.0	47.5	74.0		CORNER BRACE RE: PLAN		
E13	W18X106	30	84.0	47.5	73.0	45	82.0	23.5	38.5
E14	W18X106	30	83.5	47.5	73.0	45	82.0	23.5	38.5
E15	W18X106	30	83.0	47.5	72.0	45	78.5	22.5	37.5
E16	W18X106	30	82.0	47.5	72.0	45	78.5	22.5	37.5
E17	W18X106	30	81.5	47.5	71.0	45	75.0	21.5	36.5
E18	W18X106	30	81.0	47.5	71.0	45	75.0	21.5	36.5
E19	W18X106	30	80.0	47.5	70.0		CORNER BRACE RE: PLAN		
E20	W18X106	30	79.5	47.5	70.0		CORNER BRACE RE: PLAN		

NOTE: PILE E13, ADD CORNER BRACE AT ELEV. = 68.0' RE: PLAN & ELEVATION.

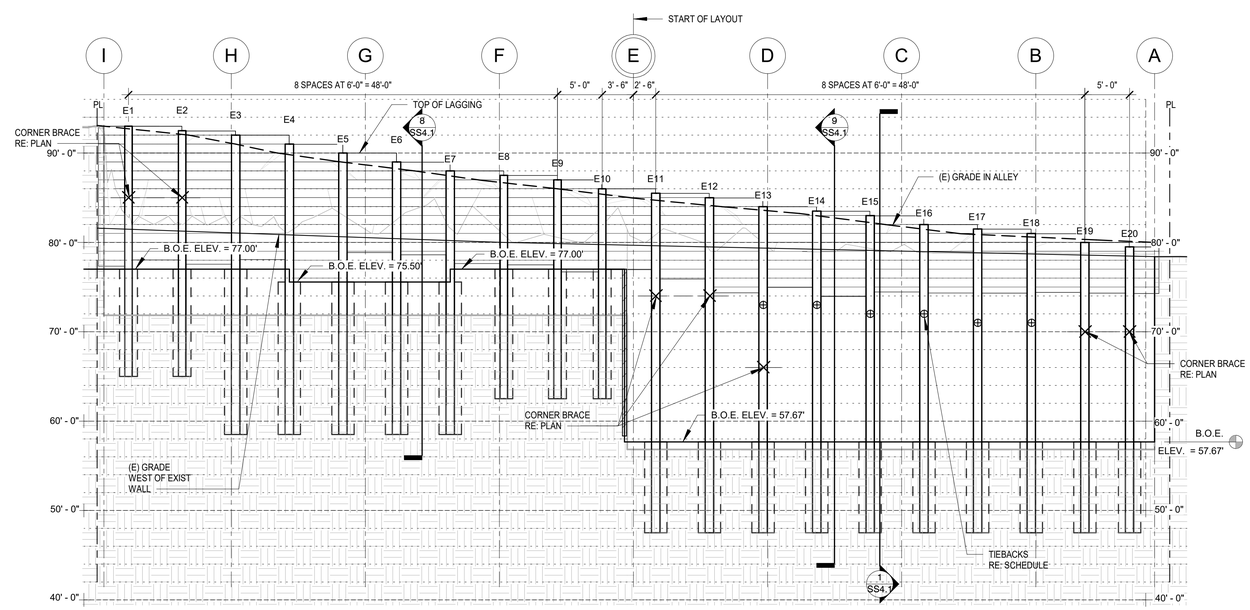

SCALE: 1/8" = 1'-0"

2 EAST ELEVATION

CALL 48 HOURS BEFORE YOU DIG 1-800-424-5555

Utility Conflict Note

CAUTION:

THE CONTRACTOR SHALL BE RESPONSIBLE FOR VERIFYING THE LOCATION, DIMENSION, AND DEPTH OF ALL EXISTING UTILITIES WHETHER SHOWN ON THESE PLANS OR NOT BY POTHOLING THE UTILITIES AND SURVEYING THE HORIZONTAL AND VERTICAL LOCATION PRIOR TO CONSTRUCTION. THIS SHALL INCLUDE CALLING UTILITY LOCATE AT 1-800-424-5555 AND THEN POTHOLING ALL OF THE EXISTING UTILITIES AT LOCATIONS OF NEW UTILITY CROSSINGS TO PHYSICALLY VERIFY WHETHER OR NOT CONFLICTS EXIST. LOCATIONS OF SAID UTILITIES AS SHOWN ON THESE PLANS ARE BASED UPON THE UNVERIFIED PUBLIC INFORMATION AND ARE SUBJECT TO VARIATION. RESOLVE ANY PROBLEMS PRIOR TO PROCEEDING WITH CONSTRUCTION.

FOR SEATTLE DPD USE ONLY

CT ENGINEERING INC.
Structural Engineers
160 Nickerson Street Suite 302 Seattle, WA 98109
206.285.4512 (V) 206.285.0818 (F)
www.ctengineering.com

01/21/21

No.	REVISION	DATE

JOB #: 20021
ENG: CTE
CAD: CTE
SCALE: 1/8" = 1'-0"
KEY ISSUE DATES:
PERMIT: 01/21/2021

Elevations and Details

BLOSSOM APARTMENTS SHORING
214-220 5TH Avenue S
Seattle, WA 98104

SS3.0

1/21/2021 11:14:14 AM
C:\Users\BWylie\Documents\20021 - Blossom Apt Shoring - v20_BWylie.rvt

TEMPORARY PILE SCHEDULE - NORTH WALL

SOLDIER PILE NUMBER	PILE SIZE	HOLE DIAMETER (INCHES)	T.O.P. ELEVATION (FEET)	B.O.P. ELEVATION (FEET)
N1	W10X33	24	75.0	58.5
N2	W10X33	24	75.0	58.5
N3	W10X33	24	75.0	58.5
N4	W10X33	24	75.0	58.5
N5	W10X33	24	75.0	58.5
N6	W10X33	24	75.0	58.5
N7	W10X33	24	75.0	58.5
N8	W10X33	24	75.0	58.5
N9	W10X33	24	75.0	58.5
N10	W10X33	24	75.0	58.5
N11	W14X82	24	88.5	65.0
N12	W14X82	24	88.5	65.0
N13	W14X82	24	88.5	65.0
N14	W10X33	24	63.0	47.5
N15	W14X68	24	68.0	43.0
N16	W14X82	24	72.0	43.0
N17	W18X106	30	77.0	47.5
N18	W18X106	30	77.0	47.5
N19	W18X106	30	77.0	47.5

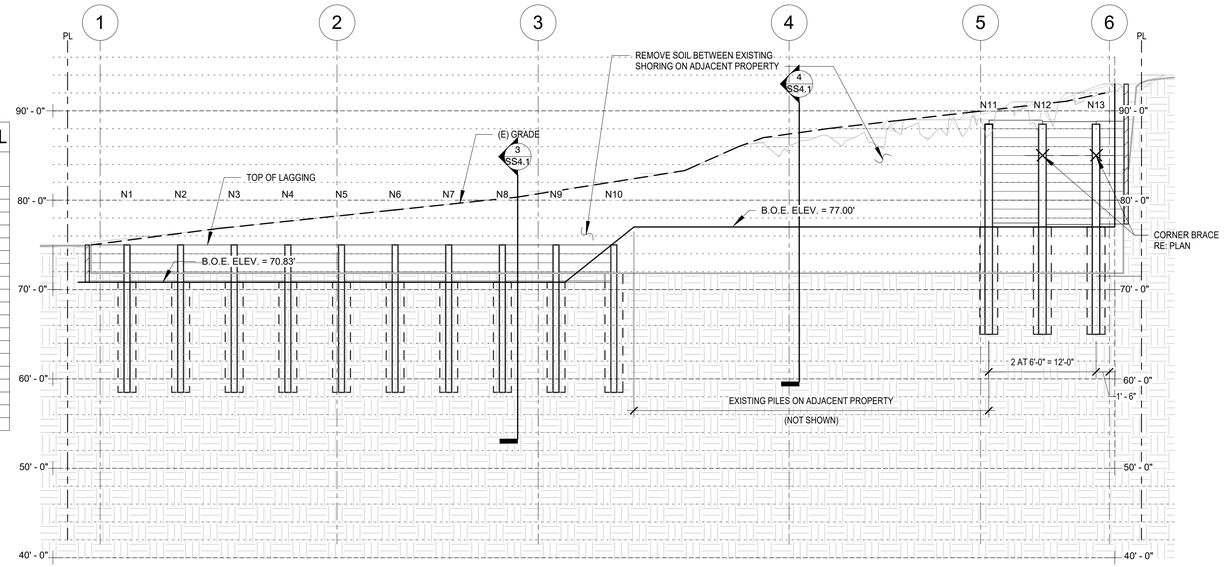

SCALE: 1/8" = 1'-0"

1 NORTH ELEVATION

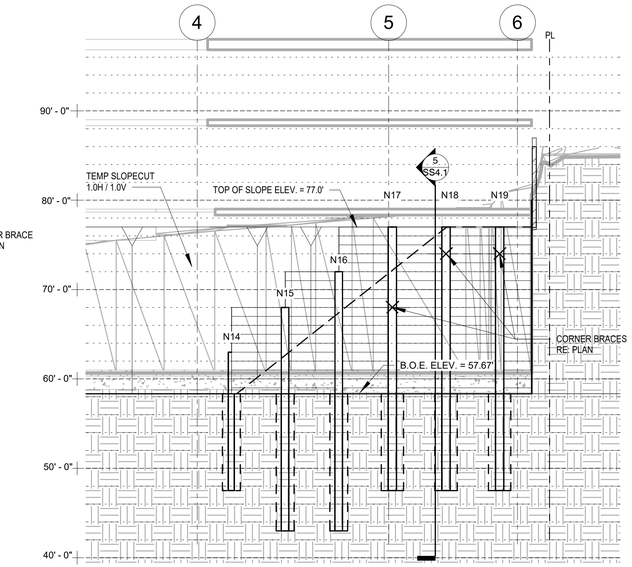

SCALE: 1/8" = 1'-0"

2 ELEVATION AT GRID E

TEMPORARY PILE SCHEDULE - WEST...

SOLDIER PILE NUMBER	PILE SIZE	HOLE DIAMETER (INCHES)	T.O.P. ELEVATION (FEET)	B.O.P. ELEVATION (FEET)
W1	W10X33	24	73.5	58.5
W2	W10X33	24	74.0	58.5
W3	W10X33	24	74.5	58.5
W4	W10X33	24	75.0	60.5
W5	W10X33	24	75.0	60.5

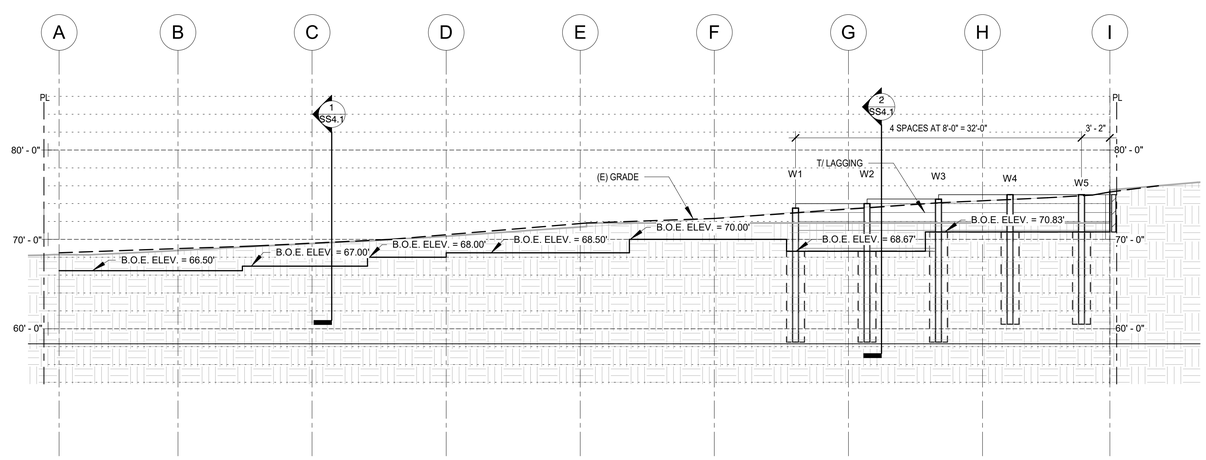

SCALE: 1/8" = 1'-0"

3 WEST ELEVATION

CALL 48 HOURS
BEFORE YOU DIG
1-800-424-5555

Utility Conflict Note

CAUTION:

THE CONTRACTOR SHALL BE RESPONSIBLE FOR VERIFYING THE LOCATION, DIMENSION, AND DEPTH OF ALL EXISTING UTILITIES WHETHER SHOWN ON THESE PLANS OR NOT BY POTHOLING THE UTILITIES AND SURVEYING THE HORIZONTAL AND VERTICAL LOCATION PRIOR TO CONSTRUCTION. THIS SHALL INCLUDE CALLING UTILITY LOCATE AT 1-800-424-5555 AND THEN POTHOLING ALL OF THE EXISTING UTILITIES AT LOCATIONS OF NEW UTILITY CROSSINGS TO PHYSICALLY VERIFY WHETHER OR NOT CONFLICTS EXIST. LOCATIONS OF SAID UTILITIES AS SHOWN ON THESE PLANS ARE BASED UPON THE UNVERIFIED PUBLIC INFORMATION AND ARE SUBJECT TO VARIATION. RESOLVE ANY PROBLEMS PRIOR TO PROCEEDING WITH CONSTRUCTION.

FOR SEATTLE DPD USE ONLY

CT ENGINEERING INC.
Structural Engineers
160 Nickerson Street Suite 302 Seattle, WA 98109
206.285.4512 (V) 206.285.0518 (F)
www.ctengineering.com

01/21/21

No.	REVISION	DATE

JOB #: 20021
ENG: CTE
CAD: CTE
SCALE: 1/8" = 1'-0"
KEY ISSUE DATES:
PERMIT: 01/21/2021

Elevations and Details

BLOSSOM APARTMENTS SHORING
214-220 5TH Avenue S
Seattle, WA 98104

SS3.1

1/21/2021 11:14:15 AM
C:\Users\BWyble\Documents\20021 - Blossom Apt Shoring - v20_BWyble.rvt

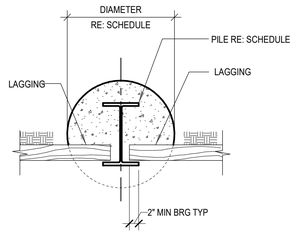

SCALE: 3/4" = 1'-0"

1 TYPICAL PILE DETAIL

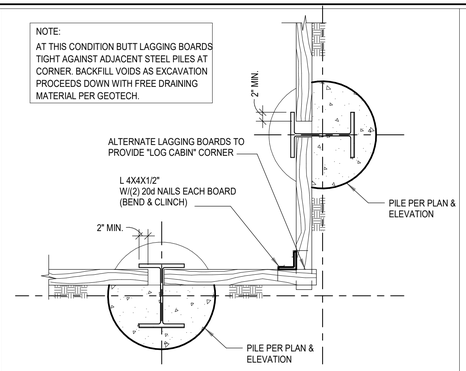

SCALE: 3/4" = 1'-0"

2 TYPICAL BUTTED CORNER DETAIL

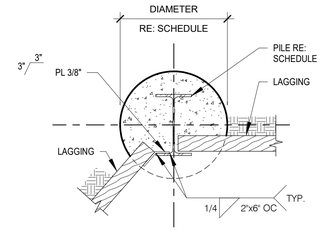

SCALE: 3/4" = 1'-0"

3 TYPICAL CORNER PILE DETAIL

SCALE: 3/4" = 1'-0"

4 NOT USED

CALL 48 HOURS BEFORE YOU DIG 1-800-424-5555

Utility Conflict Note

CAUTION:

THE CONTRACTOR SHALL BE RESPONSIBLE FOR VERIFYING THE LOCATION, DIMENSION, AND DEPTH OF ALL EXISTING UTILITIES WHETHER SHOWN ON THESE PLANS OR NOT BY POTHOLING THE UTILITIES AND SURVEYING THE HORIZONTAL AND VERTICAL LOCATION PRIOR TO CONSTRUCTION. THIS SHALL INCLUDE CALLING UTILITY LOCATE AT 1-800-424-5555 AND THEN POTHOLING ALL OF THE EXISTING UTILITIES AT LOCATIONS OF NEW UTILITY CROSSINGS TO PHYSICALLY VERIFY WHETHER OR NOT CONFLICTS EXIST. LOCATIONS OF SAID UTILITIES AS SHOWN ON THESE PLANS ARE BASED UPON THE UNVERIFIED PUBLIC INFORMATION AND ARE SUBJECT TO VARIATION. RESOLVE ANY PROBLEMS PRIOR TO PROCEEDING WITH CONSTRUCTION.

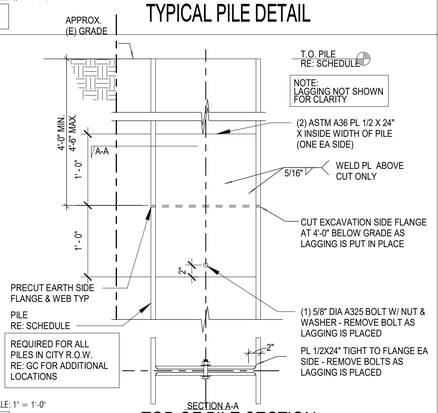

SCALE: 1" = 1'-0"

6 TOP OF PILE SECTION

SCALE: 3/4" = 1'-0"

7 NOT USED

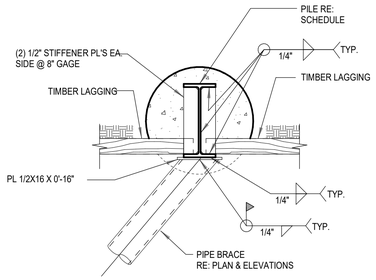

SCALE: 3/4" = 1'-0"

8 HORIZ. BRACE CONNECTION

SCALE: 3/4" = 1'-0"

9 NOT USED

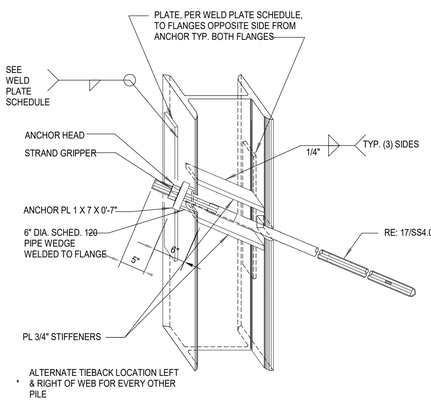

Weld Plate Schedule		
PILE	PLATE	WELD
W 18X65	PL 3/4 X 3 1/2 X 2'-0"	5/16"
W 18X106	PL 1" X 4 1/2 X 3'-0"	5/16"

NOTE:
ALL PLATES SHALL BE ASTM A572

SCALE: 3/4" = 1'-0"

16 TYPICAL PILE REINFORCING AT TIEBACK (TEMP)

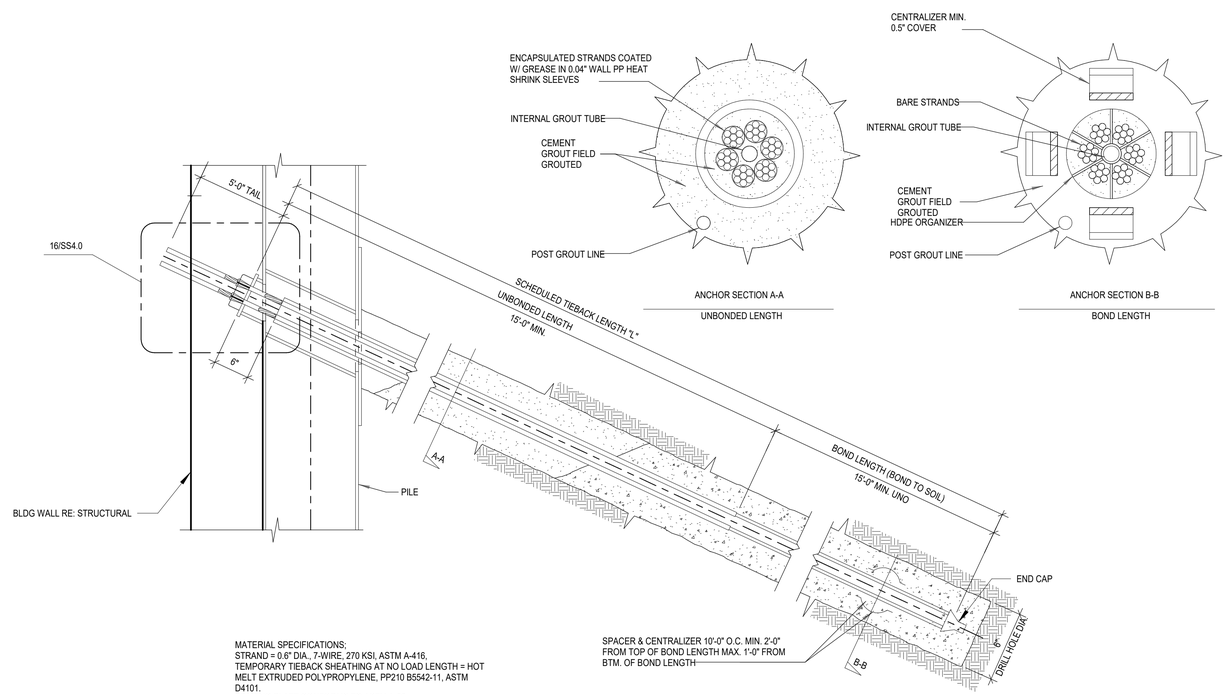

MATERIAL SPECIFICATIONS;
STRAND = 0.6" DIA., 7-WIRE, 270 KSI, ASTM A-416,
TEMPORARY TIEBACK SHEATHING AT NO LOAD LENGTH = HOT MELT EXTRUDED POLYPROPYLENE, PP210 B5542-11, ASTM D4101.
BEARING PLATE CONFORMS TO ASTM A-36.

SCALE: 3/4" = 1'-0"

17 TYPICAL TEMPORARY TIEBACK ANCHOR DETAILS

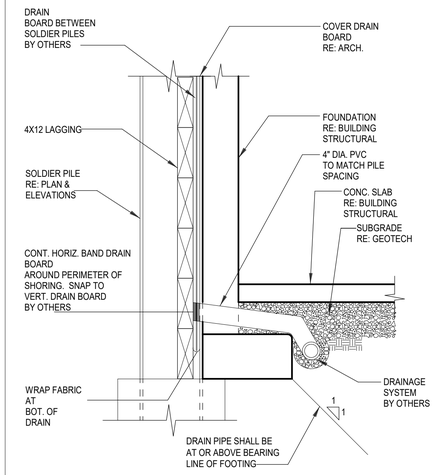

1. WHERE PVC PIPE PASSES THROUGH OR BENEATH WALLS, THE PVC PIPE SHALL BE PROTECTED BY A SLEEVE WITH A 1 INCH MINIMUM ANNULAR GAP AND THE GAP BETWEEN THE PVC PIPE AND THE SLEEVE SHALL BE SEALED WITH A FLEXIBLE SEALANT.
2. DOWNSPOUT LINES MUST NOT BE CONNECTED TO FOUNDATION DRAINS.
3. PVC PIPE SHALL CONFORM TO ASTM 3034, SDR 35.
4. PERFORATED DRAIN PIPE SHALL BE PVC, SCHEDULE 40, CONFORMING TO ASTM D 2729.

SCALE: 3/4" = 1'-0"

20 TYPICAL SECTION

FOR SEATTLE DPD USE ONLY

CT ENGINEERING INC.
Structural Engineers
160 Nickerson Street Suite 302 Seattle, WA 98109
206.285.4512 (V) 206.285.0818 (F)
www.ctengineering.com

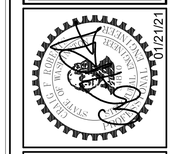

No.	REVISION	DATE

JOB #: 20021
ENG: CTE
CAD: CTE
SCALE: As indicated
KEY ISSUE DATES:
PERMIT: 01/21/2021

Details
BLOSSOM APARTMENTS SHORING
214-220 5TH Avenue S
Seattle, WA 98104

SS4.0

1/21/2021 11:14:16 AM
C:\Users\BWyble\Documents\20021 - Blossom Apt Shoring - v20_BWyble.rvt

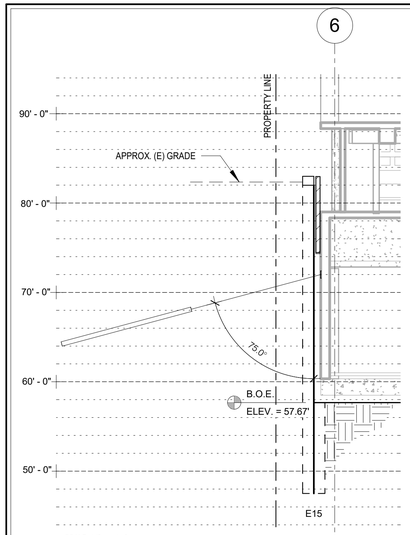

SCALE: 1/8" = 1'-0"

1 WEST SECTION AT GRID C

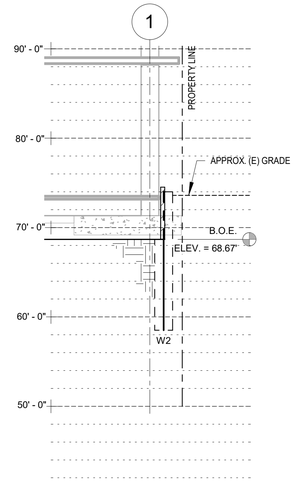

SCALE: 1/8" = 1'-0"

2 WEST SECTION at PILE W2

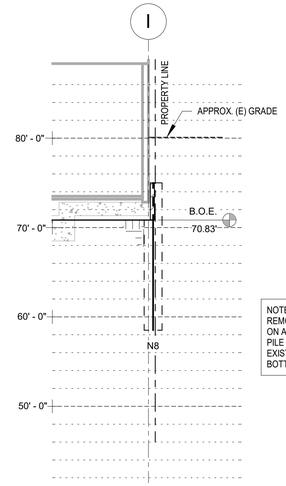

NOTE:
REMOVE SOIL TO EXISTING BUILDING ON ADJACENT PROPERTY TO TOP PILE ELEVATION AND/OR TOP OF EXISTING FOOTING. FIELD VERIFY BOTTOM OF (E)FOOTING ELEVATION.

SCALE: 1/8" = 1'-0"

3 NORTH SECTION at PILE N8

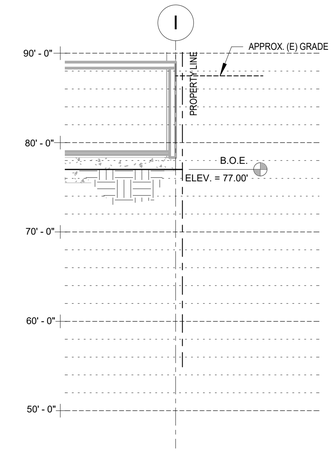

NOTE:
REMOVE SOIL TO EXISTING BUILDING ON ADJACENT PROPERTY TO TOP PILE ELEVATION AND/OR TOP OF EXISTING FOOTING. FIELD VERIFY BOTTOM OF (E)FOOTING ELEVATION.

SCALE: 1/8" = 1'-0"

4 NORTH SECTION at GRID 4

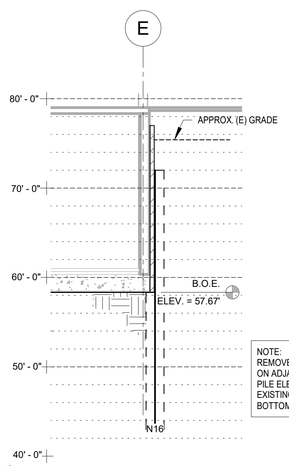

NOTE:
REMOVE SOIL TO EXISTING BUILDING ON ADJACENT PROPERTY TO TOP PILE ELEVATION AND/OR TOP OF EXISTING FOOTING. FIELD VERIFY BOTTOM OF (E)FOOTING ELEVATION.

SCALE: 1/8" = 1'-0"

5 NORTH SECTION BETWEEN GRID 5 AND 6

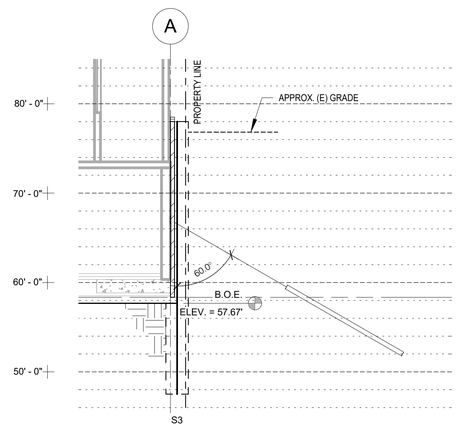

SCALE: 1/8" = 1'-0"

6 SOUTH SECTION at PILE S3

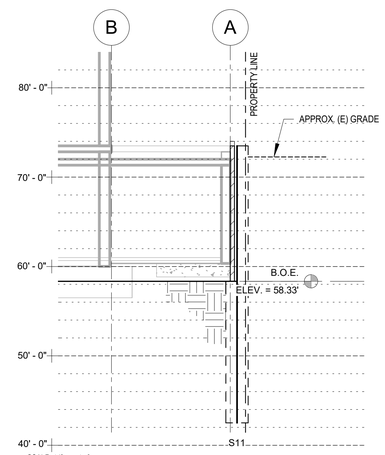

SCALE: 1/8" = 1'-0"

7 SOUTH SECTION at PILE S11

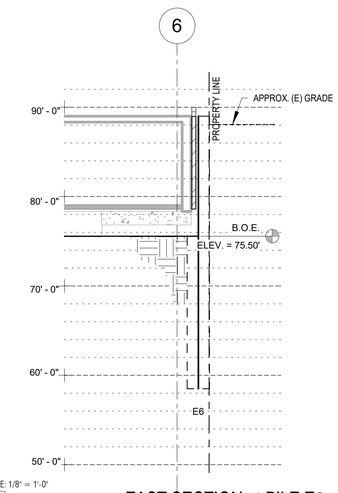

SCALE: 1/8" = 1'-0"

8 EAST SECTION at PILE E6

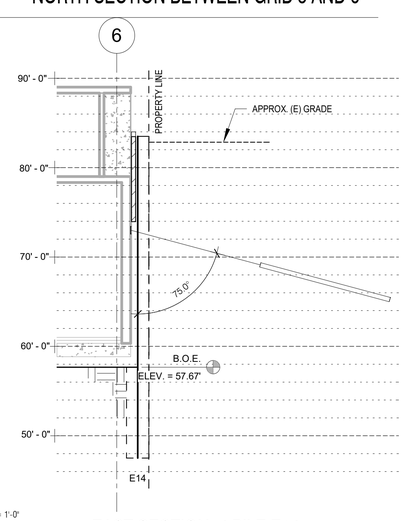

SCALE: 1/8" = 1'-0"

9 EAST SECTION at PILE E14

CALL 48 HOURS
BEFORE YOU DIG
1-800-424-5555

Utility Conflict Note

CAUTION:

THE CONTRACTOR SHALL BE RESPONSIBLE FOR VERIFYING THE LOCATION, DIMENSION, AND DEPTH OF ALL EXISTING UTILITIES WHETHER SHOWN ON THESE PLANS OR NOT BY POTHOLING THE UTILITIES AND SURVEYING THE HORIZONTAL AND VERTICAL LOCATION PRIOR TO CONSTRUCTION. THIS SHALL INCLUDE CALLING UTILITY LOCATE AT 1-800-424-5555 AND THEN POTHOLING ALL OF THE EXISTING UTILITIES AT LOCATIONS OF NEW UTILITY CROSSINGS TO PHYSICALLY VERIFY WHETHER OR NOT CONFLICTS EXIST. LOCATIONS OF SAID UTILITIES AS SHOWN ON THESE PLANS ARE BASED UPON THE UNVERIFIED PUBLIC INFORMATION AND ARE SUBJECT TO VARIATION. RESOLVE ANY PROBLEMS PRIOR TO PROCEEDING WITH CONSTRUCTION.

FOR SEATTLE DPD USE ONLY

CT ENGINEERING INC.
Structural Engineers
160 Nickerson Street Suite 302 Seattle, WA 98109
206.285.4512 (V) 206.285.0818 (F)
www.ctengineering.com

01/21/21

No.	REVISION	DATE

JOB #: 20021
ENG: CTE
CAD: CTE
SCALE: 1/8" = 1'-0"

KEY ISSUE DATES:

PERMIT: 01/21/2021

Sections

BLOSSOM APARTMENTS SHORING
214-220 5TH Avenue S
Seattle, WA 98104

SS4.1

1/21/2021 11:14:17 AM
C:\Users\BWyble\Documents\20021 - Blossom Apt Shoring - v20_BWyble.rvt

STRUCTURAL NOTES

01000 - GENERAL REQUIREMENTS
THE STRUCTURAL NOTES SUPPLEMENT THE PLANS AND SPECIFICATIONS. ANY DISCREPANCY FOUND BETWEEN THE DRAWINGS, NOTES, SPECIFICATIONS, SITE CONDITIONS, AND ARCHITECTURAL PLANS SHALL BE REPORTED TO THE ARCHITECT WHO SHALL CORRECT THE DISCREPANCY IN WRITING. ANY WORK COMPLETED AFTER DISCOVERY OF THE DISCREPANCY SHALL BE DONE AT THE CONTRACTOR'S RISK. REFER TO ARCHITECTURAL PLANS FOR OPENINGS, ARCHITECTURAL TREATMENTS, AND DIMENSIONS NOT SHOWN. CONSULT MECHANICAL PLANS FOR DUCTS, PIPES, ETC. NOT SHOWN.

THE CONTRACTOR SHALL PROVIDE BRACING AND SUPPORT REQUIRED FOR TEMPORARY CONSTRUCTION LOADS AND FOR STRUCTURAL COMPONENTS AS REQUIRED DURING ERECTION. BACKFILL BEHIND WALLS SHALL NOT BE PLACED UNTIL THE WALLS ARE PROPERLY SUPPORTED.

THE CONTRACTOR SHALL BE RESPONSIBLE FOR COORDINATION OF ALL WORK INCLUDING BUT NOT LIMITED TO EXCAVATION, SHORING, AND OTHER WORK WITH ALL UTILITIES AND ADJACENT PROPERTIES. CALL THE UTILITY LOCATE SERVICE PRIOR TO ANY WORK AT 1-800-424-5555.

01001 - CODE REQUIREMENTS
ALL DESIGN AND CONSTRUCTION SHALL CONFORM TO THE 2015 INTERNATIONAL BUILDING CODE AS ADOPTED BY THE LOCAL JURISDICTION.

01100 - DESIGN LIVE LOADS / DATA

LIVE LOADS	
FLOOR	
RESIDENTIAL	40 PSF
BALCONIES (COMMON)	100 PSF
DECKS (RESIDENTIAL)	100PSF
PARKING	40 PSF
EXIT FACILITIES	100 PSF
OFFICE	50 PSF
RETAIL	100 PSF
COMMON AREAS	100 PSF
LANDSCAPE ALLOWANCE	PER PLAN
ROOF	
SNOW	25 PSF UNIFORM
ROOF DECKS	100 PSF
LANDSCAPE ALLOWANCE	PER PLAN

SNOW LOAD DESIGN DATA
Pg = 20 PSF Pf = 20 PSF Ce = 0.9 Is = 1.0 Ct = 1.0

WIND DESIGN DATA	
BASIC WIND SPEED	100 MPH (3 SECOND GUST
WIND IMPORTANCE FACTOR	Iw = 1.0
WIND EXPOSURE	EXPOSURE B
TOPOGRAPHIC FACTOR	Kzt = 1.00
INTERNAL PRESSURE COEFFICIENT	GCpi = +/- 0.18
COMPONENT & CLADDING WIND PRESSURE	P(C) = 25 PSF
EARTHQUAKE DESIGN DATA	
SEISMIC IMPORTANCE FACTOR	Ie = 1.0
OCCUPANCY CATEGORY	II
SPECTRAL RESPONSE ACCELERATIONS	S_s = 1.33 S_1 = 0.516
SITE CLASS	SITE CLASS D
SPECTRAL RESPONSE COEFFICIENTS	S_{DS} = 0.886 S_{D1} = 0.516
SEISMIC DESIGN CATEGORY	D
BASIC FORCE RESISTING SYSTEM	
WOOD LEVELS	BEARING WALL SYSTEM
CONCRETE LEVELS	BUILDING FRAME SYSTEM
DESIGN BASE SHEAR	1,460 KIPS
RESPONSE MODIFICATION FACTOR	
WOOD LEVELS	R = 6.5 Cs = 0.142
CONCRETE LEVELS	R = 5.0 Cs = 0.177
ANALYSIS PROCEDURE	EQUIVALENT LATERAL FORCE

01200 - GEOTECHNICAL INVESTIGATION
EARTHWORK AND FOUNDATIONS SHALL BE CONSISTENT WITH THE GEOTECHNICAL ENGINEERING RECOMMENDATIONS. ALL FOUNDATIONS SHALL BE FOUNDED ON COMPETENT NATIVE MATERIAL OR BY OTHER MEANS AS DEFINED BY THE GEOTECHNICAL ENGINEER.

SEE THE GEOTECHNICAL ENGINEERING REPORT
PREPARED BY PanGEO INC.
REPORT NO. 20-161
DATED JULY 2020.
FOUNDATIONS SHALL BE SUPPORTED ON SPREAD FOOTINGS. ALLOWABLE BEARING CAPACITY IS 6,000 PSF.

DESIGN PARAMETERS ARE AS FOLLOWS:

ACTIVE EARTH PRESSURE (YIELDING)	35 PCF
ACTIVE EARTH PRESSURE (AT-REST)	50 PCF
PASSIVE EARTH PRESSURE	400 PCF (ALLOWABLE)
SEISMIC SURCHARGE (WALLS)	7H PSF
COEFFICIENT OF FRICTION	0.40 (ALLOWABLE)
SOIL PROFILE	SITE CLASS D

ALL FOUNDATION INSTALLATIONS SHALL BE SUBJECT TO APPROVAL OF THE GEOTECHNICAL ENGINEER.

01300 - REQUIRED SUBMITTAL PROCEDURES
THE CONTRACTOR SHALL PROVIDE THE FOLLOWING SUBMITTALS TO THE ARCHITECT AND ENGINEER OF RECORD FOR APPROVAL FOUR WEEKS PRIOR TO FABRICATION.
PRE ENGINEERED STRUCTURAL COMPONENTS
CALCULATIONS BEARING THE SEAL AND SIGNATURE OF A LICENSED WASHINGTON STATE STRUCTURAL ENGINEER SHALL BE SUBMITTED FOR STEEL JOIST, PREFABRICATED PLATED WOOD TRUSSES, HOLLOW CORE PLANKS AND FIBER REINFORCED POLYMER.
SHOP DRAWINGS
SHOP DRAWINGS SHALL BE SUBMITTED TO THE ARCHITECT AND ENGINEER OF RECORD FOR APPROVAL PRIOR TO FABRICATION. IF SHOP DRAWINGS DIFFER FROM THE APPROVED DESIGN DRAWINGS, NEW DESIGN DRAWINGS BEARING THE SEAL AND SIGNATURE OF A LICENSED WASHINGTON STATE STRUCTURAL ENGINEER SHALL BE SUBMITTED ALONG WITH THE SHOP DRAWINGS TO THE APPROPRIATE JURISDICTION FOR APPROVAL PRIOR TO FABRICATION.
SHOP DRAWINGS ARE REQUIRED FOR: MASONRY AND CONCRETE REINFORCEMENT, POST TENSION TENDONS, STRUCTURAL STEEL, GLUED LAMINATED BEAMS, MANUFACTURED WOOD BEAMS, MANUFACTURED WOOD JOIST, PREFABRICATED WOOD TRUSSES, STEEL JOIST, FORMED STEEL DECK, HOLLOW CORE PLANKS, FIBER REINFORCED POLYMER, SHEAR PANELS AND CONTINUOUS HOLD-DOWN SYSTEMS.
CONCRETE MIX DESIGN
RE: SECTION XXXX WELDING PROCEDURE SPECIFICATIONS
RE: SECTION XXXX SUBSTITUTION REQUEST DEFERRED SUBMITTAL

01400 - STATEMENT OF SPECIAL INSPECTIONS
THE CONTRACTOR SHALL BE RESPONSIBLE TO COORDINATE ALL INSPECTIONS REQUIRED BY THE LOCAL BUILDING DEPARTMENT. IN ADDITION TO INSPECTIONS REQUIRED BY THE LOCAL BUILDING DEPARTMENT, THE OWNER OR A REGISTERED DESIGN PROFESSIONAL IN RESPONSIBLE CHARGE ACTING AS THE OWNER'S AGENT SHALL EMPLOY ONE OR MORE SPECIAL INSPECTORS TO PROVIDE INSPECTIONS FOR ITEMS NOTED IN IBC SECTION 1704 AND 1705 WHICH ARE SUMMARIZED IN THE SPECIAL INSPECTION SCHEDULE ON SHEET S1.10.

THE SPECIAL INSPECTOR SHALL BE A QUALIFIED PERSON EMPLOYED BY AN APPROVED AGENCY. THE SPECIAL INSPECTOR SHALL KEEP RECORDS OF INSPECTIONS AND FURNISH THEM TO THE BUILDING OFFICIAL AND THE ENGINEER OF RECORD ON A REGULAR BASIS. A FINAL REPORT DOCUMENTING REQUIRED SPECIAL INSPECTIONS AND THE CORRECTION OF ANY DISCREPANCIES SHALL BE PROVIDED PRIOR TO COMPLETION OF BUILDING FINISHES. WHERE FABRICATION OF STRUCTURAL COMPONENTS AND ASSEMBLES IS BEING PERFORMED ON THE PREMISES OF A FABRICATOR'S SHOP, SPECIAL INSPECTION OF THE FABRICATED ITEMS SHALL BE REQUIRED EXCEPT HERE THE FABRICATOR IS REGISTERED AND APPROVED TO DO SUCH WORK WITHOUT SPECIAL INSPECTION IN ACCORDANCE WITH IBC SECTION 1704.2.5. PERIODIC INSPECTION ALLOWS INSPECTION AT INTERVALS NECESSARY TO CONFIRM THAT WORK REQUIRING SPECIAL INSPECTION IS IN COMPLIANCE WITH REQUIREMENTS. CONTINUOUS SPECIAL INSPECTION REQUIRES THAT THE INSPECTOR BE ONSITE AT ALL TIMES THAT WORK REQUIRING SPECIAL INSPECTION IS PERFORMED.

01500 - STRUCTURAL OBSERVATION SERVICES
STRUCTURAL OBSERVATION SHALL BE REQUIRED. STRUCTURAL OBSERVATION SHALL BE THE VISUAL OBSERVATION OF THE STRUCTURAL SYSTEM BY A REGISTERED DESIGN PROFESSIONAL FOR GENERAL CONFORMANCE TO THE APPROVED CONSTRUCTION DOCUMENTS AT SIGNIFICANT CONSTRUCTION STAGES AND AT COMPLETION OF THE STRUCTURAL SYSTEM. STRUCTURAL OBSERVATION DOES NOT INCLUDE OR WAIVE THE RESPONSIBILITY FOR REQUIRED SPECIAL INSPECTION AS NOTED IN SECTION 01400 OR FOR INSPECTIONS REQUIRED BY THE LOCAL JURISDICTION. THE OWNER OR OWNER'S AGENT SHALL RETAIN A REGISTERED DESIGN PROFESSIONAL TO PERFORM STRUCTURAL OBSERVATIONS FOR ITEMS LISTED WITHIN THE STRUCTURAL OBSERVATION SCHEDULE RE: S1.10.

THE REGISTERED DESIGN PROFESSIONAL SHALL KEEP RECORDS OF STRUCTURAL OBSERVATIONS AND FURNISH THEM TO THE BUILDING OFFICIAL AND THE OWNER ON A REGULAR BASIS. A FINAL DOCUMENT NOTING REQUIRED STRUCTURAL OBSERVATIONS SHALL BE COMPLETED AND THE CORRECTION OF ANY DISCREPANCIES SHALL BE PROVIDED TO THE BUILDING OFFICIAL AND THE OWNER PRIOR TO ISSUANCE OF CERTIFICATE OF OCCUPANCY.

01600 - CONTRACTORS RESPONSIBILITY
EACH CONTRACTOR RESPONSIBLE FOR THE CONSTRUCTION OF A MAIN WIND- OR SEISMIC-RESISTING COMPONENT LISTED IN THE STATEMENT OF SPECIAL INSPECTIONS (SECTION 01400)SHALL SUBMIT A WRITTEN STATEMENT OF RESPONSIBILITY TO THE BUILDING OFFICIAL AND THE OWNER PRIOR TO THE COMMENCEMENT OF WORK ON THE SYSTEM OR COMPONENT. THE CONTRACTOR'S STATEMENT OF RESPONSIBILITY SHALL CONTAIN THE FOLLOWING:

1. ACKNOWLEDGMENT OF AWARENESS OF THE SPECIAL REQUIREMENTS CONTAINED IN THE STATEMENT OF SPECIAL INSPECTIONS;
2. ACKNOWLEDGMENT THAT CONTROL WILL BE EXERCISED TO OBTAIN CONFORMANCE WITH THE CONSTRUCTION DOCUMENTS APPROVED BY THE BUILDING OFFICIAL;
3. PROCEDURES FOR EXERCISING CONTROL WITHIN THE CONTRACTOR'S ORGANIZATION, THE METHOD AND FREQUENCY OF REPORTING AND THE DISTRIBUTION OF THE REPORTS; AND
4. IDENTIFICATION AND QUALIFICATIONS OF THE PERSON(S) EXERCISING SUCH CONTROL AND THEIR POSITIONS(S) IN THE ORGANIZATION.

02000- SITE CONSTRUCTION
ALL SITE CONSTRUCTION SHALL BE CONSISTENT WITH THE GEOTECHNICAL ENGINEERING RECOMMENDATIONS AS NOTED IN THE GEOTECHNICAL ENGINEERING REPORT (SEE SECTION -1004) AND IN SUBSEQUENT DIRECTIVES.

02004 - SEGMENTAL RETAINING WALLS
SEGMENTAL RETAINING WALLS AND MECHANICALLY STABILIZED EARTH (MSE) RETAINING WALLS SHALL BE DESIGNED BY OTHERS.

02100 - EXCAVATION SUPPORT AND PROTECTION
EXCAVATION FOR FOUNDATIONS SHALL BE PER PLAN TO COMPETENT NATIVE MATERIAL PER THE GEOTECHNICAL ENGINEERING RECOMMENDATIONS. OVER EXCAVATED AREAS SHALL BE BACKFILLED WITH LEAN CONCRETE OR PER GEOTECHNICAL RECOMMENDATIONS AT THE CONTRACTOR'S EXPENSE.

EXCAVATION SLOPES SHALL BE SAFE AND SHALL NOT BE GREATER THAN THE LIMITS SPECIFIED BY LOCAL, STATE, AND NATIONAL SAFETY REGULATIONS.

INSTALLATION OF CONSTRUCTION SHORING, IF REQUIRED, SHALL BE PER THE SHORING DRAWINGS, NOTES, AND SPECIFICATIONS.

02200 - BACKFILL AND COMPACTION
BACKFILL SHALL NOT BE PLACED UNTIL THE REMOVAL OF FORMWORK AND DEBRIS. DO NOT BACKFILL WALLS UNTIL PROPERLY SUPPORTED. ALL BACKFILL MATERIAL AND PLACEMENT PROCEDURES SHALL BE CONSISTENT WITH THE GEOTECHNICAL ENGINEERING RECOMMENDATIONS.

03000 - CAST IN PLACE CONCRETE
CONCRETE CONSTRUCTION SHALL CONFORM TO THE AMERICAN CONCRETE INSTITUTE STANDARD ACI 318-05 "BUILDING CODE REQUIREMENTS FOR STRUCTURAL CONCRETE".

CEMENT AND CONCRETE SHALL CONFORM TO IBC SECTION 1903. ADMIXTURES SHALL BE APPROVED BY THE ENGINEER OF RECORD AND SHALL COMPLY WITH ACI 318-05 SECTION 3.6. CONCRETE EXPOSED TO FREEZING AND THAWING SHALL HAVE AN AIR ENTRAINING ADMIXTURE CONFORMING TO IBC SECTION 1904.2. THE USE OF WATER SOLUBLE CHLORIDE ION SHALL NOT BE USED.

THE CONTRACTOR SHALL SUBMIT MIX DESIGNS TO ENGINEER OF RECORD FOR APPROVAL FOUR WEEKS PRIOR TO PLACING CONCRETE. MIX DESIGNS SHALL BE REVIEWED FOR CONFORMANCE TO IBC SECTIONS 1904 AND 1905.

CONCRETE MIX DESIGNS SHALL MEET THE FOLLOWING REQUIREMENTS

(1)	(2)	(3)	(4)	(5)	(6)	(7)
2500	0.50	4 +/- 1	0 +/- 1	NO		INTERIOR SLAB ON GRADE
2500	0.45	4 +/- 1	0 +/- 1	NO		EXTERIOR SLAB ON GRADE
3000	0.58	5 +/- 1	0 +/- 1	YES		FOOTINGS
4000	0.45	5 +/- 1	0 +/- 1	YES		INTERIOR WALLS
4000	0.45	4 +/- 1	0 +/- 1	YES		EXTERIOR WALLS
5000	0.39	5 +/- 1	0 +/- 1	YES		COLUMNS
4000	0.44	4 +/- 1	0 +/- 1	YES		INTERIOR ELEVATED SLABS
4000	0.35	4 +/- 1	0 +/- 1	YES		EXTERIOR ELEVATED SLABS
6000	0.39	NA	0 +/- 1	YES		SHOT CRETE
3000	0.50	5 +/- 1	0 +/- 1	YES		ALL OTHER CONCRETE

(1) 28 DAY STRENGTH F'C [PSI]
(2) MAX. WATER / CEMENT RATIO
(3) MAX. SLUMP [IN]
(4) AIR ENTRAINMENT [%]
(5) SPECIAL INSPECTION REQUIRED
(6) MIN. 90 LB SACKS OF CEMENT
(7) LOCATION AND APPLICATION

ONE COMPRESSION TEST MINIMUM SHALL BE COMPLETED FOR EVERY 150 CUBIC YARDS OR 5000 SQUARE FEET OF SURFACE AREA FOR EACH MIX DESIGN PLACED EACH DAY. A TEST SHALL BE THE AVERAGE STRENGTH OF TWO CYLINDERS MADE FROM THE SAME SAMPLE AND TESTED AT THE SPECIFIED AGE. ADDITIONAL CYLINDERS MAY BE MADE FOR INFORMATION REGARDING POST TENSIONING, FORM REMOVAL, STRENGTH DEVELOPMENT, OR OTHER PURPOSES.
1. CONCRETE SHALL BE ACCEPTABLE IF:NO TEST FALLS 500 PSI BELOW THE SPECIFIED STRENGTH.
2. THE AVERAGE OF ALL SETS OF 3 CONSECUTIVE TESTS DOES NOT FALL BELOW THE SPECIFIED STRENGTH.

CONCRETE NOT MEETING THE ABOVE CRITERIA SHALL BE SUBJECT TO FURTHER TESTING AT NO ADDITIONAL EXPENSE TO THE OWNER.

RESHORING, WHERE REQUIRED, SHALL CONFORM TO ACI 301 SECTION 4.6.

CHAMFER ALL EXPOSED CORNERS PER THE ARCHITECTURAL PLANS OR ¾ INCH IF NOT SPECIFIED BY THE ARCHITECT.

03010 - CONCRETE REHABILITATION
CONTRACTOR SHALL MAKE AN ALLOWANCE TO PROVIDE FOR CONCRETE REHABILITATION INCLUDING, BUT NOT LIMITED TO, CONCRETE SACKING, PATCHING, REPAIR, SEALING, AND CRACK INJECTION. EXPOSED CONCRETE SHALL BE FINISHED PER ARCHITECT.

03100 - REINFORCING STEEL
REINFORCING STEEL DETAILING, FABRICATION, AND PLACEMENT SHALL BE PER ACI 318-05.
REINFORCING STEEL SHALL MEET THE FOLLOWING REQUIREMENTS:

ASTM A-615 DEFORMED BARS GRADE 40 (FY=40 KSI) FOR #3 BARS ONLY
ASTM A-615 DEFORMED BARS GRADE 60 (FY=60 KSI) FOR #4 BARS AND LARGER
ASTM A-706 DEFORMED BARS GRADE 60 (FY=60 KSI) FOR ALL WELDABLE BARS
ASTM A-1064 SMOOTH BAR (FY=60 KSI) FOR WELDED WIRE FABRIC.

REINFORCING FOR SLABS ON GRADE SHALL BE 6X6 W1.4XW1.4 WELDED WIRE FABRIC UNLESS NOTED OTHERWISE. PROVIDE LAP SPLICES PER THE LAP SPLICE SCHEDULE ON SHEET S6.00. REINFORCING STEEL AT ALL WALLS, SLABS, AND FOOTINGS SHALL BE CONTINUOUS AROUND CORNERS ELSE CORNER BARS SHALL BE PROVIDED.

COVER REQUIREMENTS SHALL BE AS FOLLOWS UNLESS NOTED OTHERWISE:

CONCRETE CAST AGAINST EARTH	
ALL BAR SIZES	3"
FORMED SURFACE EXPOSED TO EARTH OR WEATHER	
#6 AND LARGER	2"
#5 AND SMALLER	1 1/2"
CONCRETE NOT EXPOSED TO EARTH OR WEATHER	
WALLS AND JOISTS	
#14 AND #18 BARS	1 1/2"
#11 BARS AND SMALLER	3/4"
SLABS AND JOISTS	
#14 AND #18 BARS	1 1/2"
#11 BARS AND SMALLER	1"
BEAMS, COLUMNS	
PRIMARY REINFORCEMENT	1 1/2"
TIES, STIRRUPS, AND SPIRALS	1 1/2"

REINFORCING STEEL SHALL BE ACCURATELY PLACED AND ADEQUATELY SECURED IN PLACE PRIOR TO CONCRETE PLACEMENT. REINFORCING STEEL SHALL NOT BE FIELD BENT EXCEPT AS NOTED IN THE DESIGN DRAWINGS. WELDING OF REINFORCING STEEL SHALL NOT BE PERMITTED WITHOUT PRIOR APPROVAL OF THE ENGINEER OF RECORD EXCEPT AS NOTED ON THE DESIGN DRAWINGS.

03200- CONCRETE WALL REINFORCING
PLACE TWO HORIZONTAL #5 BARS AT EACH FLOOR LEVEL OR TOP OF WALL ELEVATION. PROVIDE CORNER BARS TO MATCH HORIZONTAL REINFORCEMENT AT EACH WALL CORNER AND INTERSECTION. PROVIDE TWO VERTICAL #5 BARS AT EACH WALL CORNER AND INTERSECTION. AT ALL WALL OPENINGS PROVIDE TWO #5 BARS OVER, UNDER, AND AT THE SIDES OF THE OPENINGS. EXTEND THE HORIZONTAL BARS THE LAP SPLICE DISTANCE PAST THE OPENING OR EXTEND AS FAR AS POSSIBLE AND HOOK. PROVIDE ONE #5 BAR BY 4'-0" LONG DIAGONALLY AT EACH CORNER OF THE WALL OPENING. ALL CONCRETE SHALL BE PLACED AND CONSOLIDATED WALLS SHALL BE REINFORCED PER SCHEDULE BELOW U.N.O.:

WALL THICKNESS	HORIZONTAL	VERTICAL	LOCATION
6"	#4 AT 14" OC	#5 AT 18" OC	CENTERLINE
8"	#4 AT 10" OC	#5 AT 15" OC	CENTERLINE
10"	#4 AT 16" OC	#5 AT 18" OC	EACH FACE
12"	#4 AT 12" OC	#5 T 18" OC	EACH FACE

03220 - SHOTCRETE (PNEUMATICALLY PLACED CONCRETE)
CONCRETE PLACED PNEUMATICALLY SHALL REQUIRE PRIOR APPROVAL FROM THE ENGINEER OF RECORD. PROVIDE NON-CONTACT LAP SPLICES. OPERATORS OF PNEUMATIC PLACING DEVICES SHALL BE REQUIRED TO BE PRE-QUALIFIED TO COMPLETE THE WORK.

03300 - UNBONDED POST TENSION TENDONS FOR PRESTRESSED CONCRETE
UNBONDED POST TENSION TENDONS SHALL BE STRESS RELIEVED OR LOW RELAXATION SEVEN WIRE STRAND CONFORMING TO ASTM A-416. THE TENDON STEEL PROPERTIES SHALL BE AS FOLLOWS:

1/2" DIAMETER SEVEN WIRE STRAND	0.153 SQ. INCH AREA
ULTIMATE TENSILE STRENGTH (FPU)	270 KSI (41.3 KIPS)
MAXIMUM TEMPORARY STRESS TO OVERCOME FRICTION	216 KSI (33.0 KIPS)
ANCHORING STRESS	189 KSI (28.9 KIPS)
EFFECTIVE DESIGN STRESS (FSE)	175 KSI (26.8 KIPS)

THE MANUFACTURER OF THE UNBONDED POST-TENSIONING TENDONS SHALL BE A FULLY CERTIFIED PTI PLANT AS DEFINED BY THE POST-TENSIONING INSTITUTE'S (PTI) PROGRAM FOR CERTIFICATION OF PLANTS PRODUCING UNBONDED SINGLE STRAND TENDONS.

THE MANUFACTURER SHALL PROVIDE A LETTER CERTIFYING THAT ALL PRODUCTS SUPPLIED TO THE JOB SITE MEET THE CURRENT PTI "SPECIFICATIONS FOR UNBONDED SINGLE STRAND TENDONS"

SHOP DRAWINGS SHALL BE SUBMITTED PER THE REQUIREMENTS OF SECTION 01330.

TENDONS SHALL BE PLACED WITH A VERTICAL TOLERANCE OF ± 1/4 INCH.

03310 - CORROSION PROTECTION SYSTEM
THE SINGLE-STRAND UNBONDED TENDON SYSTEM SHALL BE FULLY ENCAPSULATED INCLUDING A CORROSION-INHIBITING COATING MATERIAL AND AN EXTRUDED PLASTIC SHEATH. THE SYSTEM SHALL PREVENT THE INGRESS OF WATER INTO THE TENDON DURING ALL STAGES OF CONSTRUCTION, AND ISOLATE THE STRAND AND ANCHORAGE FROM CONTACT WITH THE CONCRETE. TENDONS SHALL BE AS MANUFACTURED BY GENERAL TECHNOLOGIES INC. OR APPROVED EQUIVALENT. THE CORROSION PROTECTION SYSTEM SHALL MEET THE REQUIREMENTS OF THE POST TENSION INSTITUTE'S "SPECIFICATION FOR UNBONDED SINGLE STRAND TENDONS".

03320 - TENDON ANCHORS
TENDONS ANCHORS SHALL BE FULLY ENCAPSULATED AND SHALL BE RECESSED 2 INCHES MINIMUM FROM THE EDGE OF SLAB. CONTRACTOR SHALL TAKE SPECIAL PRECAUTIONS TO INSURE COMPLETE CONSOLIDATION OF CONCRETE AT TENDON ANCHORS.

03330 - TENDON STRESSING
TENDON STRESSING SHALL NOT TAKE PLACE UNTIL CYLINDER TESTS INDICATE THAT THE CONCRETE HAS ATTAINED 75 PERCENT OF THE SPECIFIED 28 DAY COMPRESSIVE STRENGTH. TENSIONING SHALL BE COMPLETED WITH A CALIBRATED HYDRAULIC RAM UNDER THE IMMEDIATE CONTROL OF A PERSON WITH EXPERIENCE IN TENDON STRESSING. MAXIMUM TENDON FORCE SHALL NOT EXCEED 33.0 KIPS (216 KSI). MAXIMUM TENDON ANCHOR SET FORCE SHALL NOT EXCEED 28.9 KIPS (189 KSI). MINIMUM TENDON FINAL EFFECTIVE FORCE SHALL NOT BE LESS THAN 26.8 KIPS (175 KSI).CONTINUOUS SPECIAL INSPECTION AND RECORDING OF ALL ELONGATIONS SHALL BE REQUIRED DURING ALL STRESSING OPERATIONS. THE OBSERVED ELONGATIONS SHALL BE WITHIN MINUS 5 PERCENT TO PLUS 7 PERCENT OF THE CALCULATED ELONGATIONS. IF ELONGATIONS EXCEED TOLERANCES STOP STRESSING PROCEDURE IMMEDIATELY AND NOTIFY THE ENGINEER OF RECORD. REPORT ALL TENDON ELONGATIONS TO THE ENGINEER OF RECORD IMMEDIATELY FOLLOWING COMPLETION OF THE TENDON STRESSING AND RECEIVE APPROVAL PRIOR TO TRIMMING TENDON ENDS.

TENDON TRIMMING AND PLACEMENT OF THE CORROSION PROTECTION SYSTEM GREASE CAPS SHALL BE COMPLETED WITHIN ONE DAY AFTER STRESSING APPROVAL. TENDON BLOCK OUTS SHALL BE FILLED WITH AN APPROVED NON-SHRINK GROUT.

03340 - SLAB PENETRATIONS
PENETRATIONS INTO THE POST TENSIONED SLAB WITH DRIVEN FASTENERS OR DRILLED ANCHORS SHALL NOT BE PERMITTED WITHOUT PRIOR APPROVAL OF THE ENGINEER OF RECORD.

03350 - CONTROL OF CRACKS IN CONCRETE
UNDER NORMAL CONDITIONS AND FOR CONVENTIONAL BUILDINGS REINFORCED CONCRETE AND POST TENSIONED CONCRETE DEVELOPS CRACKS. CRACKS ARE DUE TO INHERENT SHRINKAGE OF CONCRETE, CREEP, AND THE RESTRAINING EFFECTS OF WALLS AND OTHER STRUCTURAL ELEMENTS.

CRACKS THAT FORM ARE NORMALLY COSMETIC. CRACKED CONCRETE MAINTAINS SERVICEABILITY AND STRENGTH CAPABILITIES. AMID UN-BONDED TENDONS IN POST TENSIONED CONCRETE, IT IS POSSIBLE THAT A NUMBER OF MICRO CRACKS, WHICH NORMALLY SPREAD OVER A WIDE AREA, WILL INTEGRATE INTO A SINGLE CRACK THAT EXCEEDS .01 INCH IN WIDTH. MOST OF SUCH CRACKS DEVELOP WITHIN TWO YEARS OF CONCRETE PLACEMENT. CRACKS IN EXCESS OF .01 INCH MAY REQUIRE PRESSURE INJECTION EPOXY REPAIR.

SPECIAL EFFORT IS MADE TO REDUCE CRACK POTENTIAL BY INTRODUCING RELEASE AND CONTROL JOINTS TO ALLOW MOVEMENT OF THE CONCRETE. IT SHALL BE EMPHASIZED THAT IT IS NOT PRACTICAL TO PROVIDE TOTAL ARTICULATION AT CONCRETE JOINTS AND THEREBY ACHIEVE COMPLETE INHIBITION OF CRACKS.

04000 - CONCRETE MASONRY
ALL CONCRETE MASONRY UNITS SHALL HAVE A MINIMUM COMPRESSIVE STRENGTH OF f'm = 1500 PSI. DESIGN STRESSES ARE IN ACCORDANCE WITH WITH IBC SECTION 1704.4 "WITH SPECIAL INSPECTION". VERIFICATION OF COMPRESSIVE STRENGTHS SHALL BE PER IBC BY "UNIT STRENGTH METHOD" OR "PRISM TEST METHOD". GROUT SHALL CONSIST OF A MIXTURE OF CEMENTITIOUS MATERIALS AND AGGREGATE TO WHICH SUFFICIENT WATER HAS BEEN ADDED TO CAUSE THE MIXTURE TO FLOW WITHOUT SEGREGATION OF THE CONSTITUENTS. GROUT SHALL BE POURED IN MAXIMUM LIFTS OF 5'-0". ALL CELLS SHALL BE GROUTED UNLESS SHOWN OTHERWISE ON THE PLANS.

	UNIT STRENGTH	SPECIFICATION
CONCRETE MASONRY UNIT GRADE N DENSITY NOT LESS THAN 110 PCF	1900 PSI	ASTM C90 GRADE N-1
MORTAR	1800 PSI	ASTM C-270
GROUT	2500 PSI	ASTM C-476

VERIFICATION TESTS OF THE UNIT STRENGTHS SHALL BE DONE PRIOR TO CONSTRUCTION AND DURING CONSTRUCTION FOR EACH 5000 SQUARE FEET OF WALL AREA. ALTERNATE VERIFICATION PRISM TESTS SHALL BE DONE AT LEAST 28 DAYS PRIOR TO CONSTRUCTION AND DURING CONSTRUCTION AS NOTED ABOVE.

04100 - CONCRETE MASONRY WALL REINFORCEMENT
DEFORMED REINFORCING BARS SHALL CONFORM TO ASTM A 615. ALL WELDED REINFORCEMENT SHALL CONFORM TO ASTM A 706. PROVIDE DOWELS FROM THE FOUNDATION TO MATCH SIZE AND LOCATION OF VERTICAL REINFORCEMENT IN MASONRY UNLESS NOTED OTHERWISE. LAP ALL REINFORCING BARS A MINIMUM OF 48 BAR DIAMETERS, 18 INCHES MINIMUM UNLESS NOTED OTHERWISE. PROVIDE CORNER BARS TO MATCH HORIZONTAL WALL REINFORCING AT CORNERS AND AT WALL INTERSECTIONS. WHERE MULTIPLE BARS ARE INSTALLED IN CELL OR COURSE STAGGER LAPS A MINIMUM OF 2'-0". CENTER VERTICAL REINFORCING IN WALL UNLESS NOTED OTHERWISE. ALL REINFORCEMENT SHALL BE IN PLACE PRIOR TO GROUT PLACEMENT. CMU WALL REINFORCEMENT SHALL BE AS INDICATED BELOW UNLESS NOTED OTHERWISE:

PROVIDE (2) #5 HORIZONTAL BARS IN BOND BEAM UNITS AT:
ALL FLOOR ELEVATIONS
ALL ROOF ELEVATIONS
PROVIDE (2) #4 HORIZONTAL BARS IN BOND BEAM UNITS AT:
ALL TOP OF PARAPET ELEVATIONS
PROVIDE (2) #5 BARS:
ABOVE AND AT EDGES OF ALL WALL OPENINGS
AT EACH CORNER AND EDGES OF ALL WALLS, U.N.O.

UNIT THICKNESS	HORIZ. BARS	VERT. BARS	LOCATION
5 5/8"	(2) #4 AT 24" O.C.	#5 AT 32" O.C.	WALL CENTERLINE
7 5/8"	(2) #4 AT 40" O.C.	#5 AT 48" O.C.	WALL CENTERLINE
9 5/8"	(2) #4 AT 48" O.C.	#5 AT 48" O.C.	WALL CENTERLINE

04300 - MASONRY VENEER - ANCHORED
MASONRY VENEER SHALL BE IN ACCORDANCE WITH ACI 530-13. DIMENSIONAL STONE VENEER IS A SPECIAL SYSTEM AND SHALL BE SUBMITTED TO THE BUILDING OFFICIAL, ARCHITECT AND ENGINEER OF RECORD PRIOR TO INSTALLATION.

ANCHORED MASONRY VENEER SHALL BE ATTACHED TO BASE WITH ADJUSTABLE TWO PIECE ANCHORS.PROVIDE AT LEAST ONE ANCHOR FOR EACH 2 SQUARE FEET OF WALL AREA. PLACE ANCHORS NO MORE THAN 32 INCHES HORIZONTALLY OR 18 INCHES VERTICALLY. PROVIDE ADDITIONAL ANCHORS AROUND OPENINGS LARGER THAN 16 INCHES IN EITHER DIRECTION. SPACE ANCHORS AROUND PERIMETER OF OPENING AT A MAXIMUM OF 3 FEET ON CENTER AND PLACE WITHIN 12 INCHES OF OPENING. PROVIDE W1.7 WIRE JOINT REINFORCEMENT AT A MAXIMUM SPACING OF 16 INCHES ON CENTER PER ACI 530.

04400 - MASONRY VENEER - ADHERED
REFERENCE ARCHITECTURAL DRAWINGS.

Structural Drawing List

SHEET	DESCRIPTION	Rev	Date
S1.01	Structural Notes		
S1.02	Structural Notes		
S1.10	IBC 2015 Inspection Tables		
S1.20	Shearwall Schedule & Details		
S1.30	Holdown Schedule & Details		
S1.31	Holddown and Rebar Details		
S2.01	Foundation Plan - Basement		
S2.02	Foundation Plan - Level 1		
S2.03	Level 2 PT Plan		
S2.04	Level 2 Reinforcing Plan		
S2.05	Level 3 PT Plan		
S2.06	Level 3 Reinforcing Plan		
S2.07	Shearwall and Holdown Plan		
S2.08	Level 4 Floor Framing Plan		
S2.09	Level 5 Floor Framing Plan		
S2.10	Level 6 Floor Framing Plan		
S2.11	Level 7 Floor Framing Plan		
S2.12	Level 8 Floor Framing Plan		
S2.13	Roof Framing Plan		
S2.14	Upper Roof Framing Plan		
S3.01	Elevations		
S6.01	Concrete Details		
S6.02	Column Sections and Details		
S6.03	Concrete Details		
S6.04	Concrete Wall Sections		
S6.05	Concrete Wall Sections		
S6.06	Concrete Wall Sections		
S7.01	PT Details		
S7.02	PT Details		
S7.03	PT Details		
S8.01	Typical Elevator Steel Details		
S9.10	Wood Framing Details		
S9.20	Wood Framing Details		
S9.30	Wood Framing Details		
S9.50	Wood & Steel Details		

Sheet Count: 35

CT ENGINEERING INC.
Structural Engineers
180 Nickerson Street Suite 302 Seattle, WA 98109
206.285.4512 (V) 206.285.0618 (F)
www.ctengineering.com

01.21.2021

No.	REVISION	DATE

JOB #: 20021
ENG: TSW
CAD: TSW
SCALE: 3/4" = 1'-0"
KEY ISSUE DATES:
PERMIT: 01.21.2021

FOR PERMIT

Structural Notes
BLOSSOM APARTMENTS
214-220 5th Avenue S
Seattle, WA 98104

S1.01

C:\Users\TWandschneider\Documents\20021 - Blossom Apartments - v20_tylerw@ctengineering.com.rvt
1/21/2021 11:15:31 AM

ABBREVIATIONS

A.B. ANCHOR BOLT
ABV. ABOVE
ADD. ADDITIONAL
ALT. ALTERNATE
ARCH. ARCHITECT(URAL)
@ AT

B. BOTTOM
B/ BOTTOM OF
B.E.N. BOUNDARY EDGE NAILING
BNDRY. BOUNDARY
B.O. BOTTOM OF
B.G. BACK GOUGE
BLDG. BUILDING
BLK. BLOCK
BLKG. BLOCKING
BM. BEAM
BRG. BEARING
BTM. BOTTOM
BTWN. BETWEEN

CANT. CANTILEVER
C.I.P. CAST IN PLACE
C.J. CONSTRUCTION JOINT
CL CENTERLINE
CLR. CLEAR
CONT. CONTINUOUS
CONC. CONCRETE
CONN. CONNECTION
COL COLUMN
CMU CONCRETE MASONRY UNIT
CTSK. COUNTERSUNK
C.Y. CUBIC YARD

d PENNY
DB DROPPED BEAM
DBL. DOUBLE
DET. DETAIL
DF DOUGLAS FIR
DIA. DIAMETER
DIAG. DIAGONAL
DIAPH. DIAPRAGM
DISTR. DISTRIBUTED
DIM. DIMENSION
DN. DOWN
DO DITTO (REPEAT)
DP. DEEP
DWG. DRAWING(S)
DWL. DOWEL

EA. EACH
E.F. EACH FACE
EL. ELEVATION
E.J EXPANSION JOINT
ELEC. ELECTRICAL
ELEV. ELEVATION
EMBD. EMBED(MENT)
E.N. EDGE NAIL
ENG. ENGINEER
E.W. EACH WAY
EQ. EQUAL
EQUIP. EQUIPMENT
EXP. EXPANSION
(E) EXISTING
EXIST. EXISTING
EXT. EXTERIOR

F/ FACE OF
F.O. FACE OF
FB FLUSH BEAM
F.N. FACE NAILED
FLR. FLOOR
FND. FOUNDATION
FRMG. FRAMING
F.S. FAR SIDE
FTG. FOOTING

GA. GAUGE (SPACING ON CL)
GALV. GALVANIZED
GLB GLUE LAMINATED BEAM
GWB GYPSUM WALL BOARD
GYP. GYPCRETE

H. HORIZONTAL
HDR. HEADER
HF HEMLOCK FIR
HF-L HEMLOCK FIR-LARCH
HGR. HANGER
HORIZ. HORIZONTAL
HD HOLDOWN
H.S.A. HEADED STUD ANCHOR
HT. HEIGHT
H.W. HEAVYWEIGHT

I.E. INVERT ELEVATION
I.F. INSIDE FACE
I.D. INSIDE DIAMETER
INT. INTERIOR

K KIPS

LB. POUND(S)
LGTH. LENGTH
LG. LONG
LGMF LIGHT GAUGE METAL FRAMING
L.S.L. LONG SLOTTED HOLES
LLH LONG LEG HORIZONTAL
LLV LONG LEG VERTICAL
L.W. LIGHT WEIGHT

MAX. MAXIMUM
MECH. MECHANICAL
MFR. MANUFACTURER
MIN. MINIMUM
MISC. MISCELLANEOUS
MTL. METAL

NO. NUMBER
NUMBER
N.T.S. NOT TO SCALE
N.S. NEAR SIDE
(N) NEW

O.C. ON CENTER
O.D. OUTSIDE DIAMETER
O.F. OUTSIDE FACE
OPNG. OPENING

PEN PANEL EDGE NAILING
PL PLATE
PSL PARALLEL STRAND LUMBER
PT POST TENSIONED
P.T. PRESSURE TREATED
PLYWD. PLYWOOD

QTY. QUANTITY

REBAR REINFORCING BAR
REF. REFERENCE
REINF. REINFORCING
REQ. REQUIRED
R.O. ROUGH OPENING

SCHED. SCHEDULE
SHT. SHEET
SIM. SIMILAR
SPEC. SPECIFICATIONS
SQ. SQUARE
STD. STANDARD
STL. STEEL
STRUCT. STRUCTURAL
SUSP. SUSPENDED
S.O.G. SLAB ON GRADE
SW SHEARWALL

T.&B. TOP AND BOTTOM
T.&G. TONGUE AND GROOVE
TEMP. TEMPORARY
THICK. THICKNESS
THRU THROUGH
TRANS. TRANSVERSE
T. TOP
T.N. TOENAILED
T.O. TOP OF
T/ TOP OF
TYP. TYPICAL

U/S UNDERSIDE
UBC UNIFORM BUILDING CODE
U.N.O. UNLESS NOTED OTHERWISE

V. VERTICAL
VERT. VERTICAL

W. WIDE
WD. WOOD
W.S. WELDED STUD
WT. WEIGHT
W.W.F. WELDED WIRE FABRIC
W/ WITH
W/O WITHOUT
W.P. WORK POINT

YD. YARD

STRUCTURAL NOTES

05000 - STRUCTURAL STEEL
DESIGN, FABRICATION, AND ERECTION OF STRUCTURAL STEEL SHALL BE IN ACCORDANCE WITH THE LATEST EDITION OF THE AMERICAN INSTITUTE OF STEEL CONSTRUCTION "AISC SPECIFICATION FOR STRUCTURAL STEEL FOR BUILDINGS". MATERIALS SHALL BE IN ACCORDANCE WITH THE FOLLOWING:

STRUCTURAL W SHAPES	ASTM A-992	Fy = 50 KSI
S, M, AND C SHAPES	ASTM A-36	Fy = 36 KSI
STEEL ANGLES	ASTM A-36	Fy = 36 KSI
PLATE MATERIAL	ASTM A-36	Fy = 36 KSI
STRUCTURAL PIPE	ASTM A-53 GRADE B	Fy = 35 KSI
STRUCTURAL HSS	ASTM A-500 GRADE B	Fy = 46 KSI
HEADED STUDS	ASTM A-108	
WELDING ELECTRODES	E70-XX TYPICAL, U.N.O.	
HIGH STRENGTH BOLTS	ASTM A-325N BEARING TYPE (SNUG TIGHT)	
ANCHOR RODS	ASTM F1554	Fy = 36 KSI
WOOD CONNECTION BOLTS	ASTM A-307	GRADE A

ALL WELDING SHALL CONFORM TO THE AWS D1-1 "STRUCTURAL WELDING CODE". ALL WELDING SHALL BE PERFORMED BY A WASHINGTON ASSOCIATION OF BUILDING OFFICIALS (WABO) AND AMERICAN WELDING SOCIETY (AWS) CERTIFIED WELDERS. ALL COMPLETE PENETRATION (CP) WELDS SHALL BE ULTRASONICALLY TESTED. ALL FILLET WELDS SHALL BE VISUALLY INSPECTED.

STRUCTURAL STEEL AND CONNECTIONS EXPOSED TO WEATHER SHALL BE HOT DIPPED GALVANIZED AFTER FABRICATION IN COMPLIANCE WITH ASTM A-153. ALL FIELD WELDS EXPOSED TO WEATHER SHALL BE COATED WITH BRUSH APPLIED ZINC-RICH PAINT COMPLYING WITH ASTM A-780.

05100 - FORMED STEEL DECK
FORMED STEEL DECK (FSD) SHALL BE AS MANUFACTURED BY VERCO IN THE DEPTH AND GAGE AS INDICATED ON THE PLANS. FABRICATION SHALL BE DONE IN ACCORDANCE WITH THE AMERICAN IRON AND STEEL INSTITUTE (AISI) "SPECIFICATION FOR THE DESIGN OF COLD FORMED STEEL STRUCTURAL MEMBERS". PROVIDE DECK UNITS IN LENGTHS SUFFICIENT TO SPAN 3 OR MORE SUPPORTS, WITH BUTTED OR NESTED END LAPS AND INTERLOCKING SIDE LAPS FORMED WITH THE VERCO PUNCHLOCK TOOL (VSC). PROVIDE 2 INCHES MINIMUM END BEARING ON SUPPORTING MEMBER. FORMED STEEL DECK SHALL BE AS FOLLOWS: U.N.O.:

USE	TYPE	MINIMUM GAGE	ICC REPORT	ATTACHMENT EDGE	SIDE	PARALLEL
FLOOR	W2-36	20	ER-2078P	7/SHEET	VSC AT 18"	PW AT 6"
ROOF	PLB-36	22	ER-2078P	5/SHEET	VSC AT 18"	PW AT 6"

ATTACHMENT OF DECK TO SUPPORT SHALL BE SHALL BE 1/2 INCH DIAMETER PUDDLE WELDS (FUSION) OR ARC SPOTS AT SPACING INDICATED ABOVE UNLESS NOTED OTHERWISE. USE E60XX ELECTRODES. WELDING OF DECK SHALL BE IN ACCORDANCE WITH AWS D1.3. SHOP DRAWINGS SHALL BE SUBMITTED PER THE REQUIREMENTS OF SECTION 01330.

05150 - STEEL JOISTS
DESIGN, FABRICATION, AND ERECTION SHALL BE IN ACCORDANCE WITH THE LATEST EDITION OF THE "STANDARD SPECIFICATIONS OF THE STEEL JOIST INSTITUTE" (IBC 2206) AND THE STRUCTURAL STEEL NOTES IN SECTION 05120 ABOVE. DESIGN SHALL BE FOR THE SPANS AND CONDITIONS SHOWN ON THE PLANS UNLESS NOTED OTHERWISE PER PLAN, LOADING SHALL BE AS FOLLOWS:

TOP CHORD LIVE LOAD	25 PSF
TOP CHORD DEAD LOAD	12 PSF
BOTTOM CHORD DEAD LOAD	5 PSF
WIND LOAD:	
NET UPLIFT (INTERIOR)	10 PSF
NET UPLIFT AT CANTILEVERS	25 PSF
HVAC:	SEE PLANS
DRAG STRUT LOADS	SEE PLANS

SHOP DRAWINGS AND CALCULATIONS SHALL BE SUBMITTED PER THE REQUIREMENTS OF SECTION 01330. ALL JOISTS SHALL BE BRIDGED PER THE MANUFACTURER STANDARDS AND COMPLYING WITH THE LATEST EDITION OF THE APPLICABLE STEEL JOIST INSTITUTE SPECIFICATION. POSITIVE ANCHORAGE SHALL BE PROVIDED AT THE ENDS OF EACH BRIDGING ROW AT BOTH TOP AND BOTTOM CHORDS. SHOP DRAWINGS SHALL SHOW ALL BRIDGING AND BRACING REQUIREMENTS PER THE STEEL JOIST INSTITUTE RECOMMENDATIONS. WHERE COLUMNS ARE NOT BRACED IN TWO DIRECTIONS BY BOLTED STEEL BEAMS, JOISTS SHALL BE FIELD BOLTED TO THE COLUMNS WITH TWO 3/4 INCH DIAMETER BOLTS.

05200 - COLD FORMED METAL FRAMING
LIGHT GAGE STEEL FRAMING MEMBERS SHALL BE FABRICATED IN ACCORDANCE WITH THE AMERICAN IRON AND STEEL INSTITUTE (AISI) "SPECIFICATION FOR THE DESIGN OF COLD FORMED STEEL STRUCTURAL MEMBERS". MATERIALS SHALL CONFORM WITH THE FOLLOWING:

GAGE	ASTM DESIGNATION	MIN. Fy
0.0179" (25 GA.) TO 0.0451"	(18 GA.) ASTM A653 SS GRADE33	33 KSI
0.0538" (16 GA.) TO 0.1180"	(12 GA.) ASTM A653 SS GRADE 50	50 KSI

ALL MEMBERS SHALL BE GALVANIZED. ALL MEMBERS SHALL BE STAMPED WITH ICC EVALUATION NUMBER, BASE METAL THICKNESS, AND YIELD STRENGTH. SIZE, SHAPE, AND GAGE SHALL BE AS INDICATED ON THE PLANS. SECTION DESIGNATIONS, SECTION PROPERTIES, ETC. ARE AS SET FORTH IN THE STEEL STUD MANUFACTURERS ASSOCIATION (SSMA) "PRODUCT TECHNICAL INFORMATION" AND NOTED SUCH AS (600S162-54):

DEPTH (1/100")	SHAPE	WIDTH (1/100")	MATERIAL THICKNESS (MILS.)
600	S	162	54

FASTENING OF COMPONENTS SHALL BE WITH SELF DRILLING SCREWS OR WELDING. WELDING OF COLD FORMED METAL FRAMING SHALL BE IN ACCORDANCE WITH AWS D1.3. SCREWS SHALL MEET THE REQUIREMENTS OF AISI SPECIFICATION E4, AND SHALL BE ICC CERTIFIED FOR THE FOLLOWING LOADS:

FRAMING THICKNESS MILS	INCHES	GAGE	#8 SCREW (0.164" DIA.) SHEAR(LBS)	PULLOUT(LBS)	#10 SCREW (0.190" DIA.) SHEAR(LBS)	PULLOUT(LBS)
18	0.0188	25	66	39	-	-
33	0.0346	20	164	72	177	84
43	0.0451	18	244	94	263	109
54	0.0566	16	344	118	370	137
68	0.0713	14	-	-	523	173
97	0.1017	12	-	-	523	173

06000 - FRAMING NOTES
FRAMING CONNECTORS, ACCESSORIES, AND FASTENERS AS NOTED IN THE PLANS AND DETAILS SHALL BE AS MANUFACTURED BY SIMPSON STRONG-TIE. EQUIVALENT HARDWARE MAY BE USED WITH PRIOR APPROVAL BY ENGINEER OF RECORD. INSTALL ALL HARDWARE PER MANUFACTURERS' SPECIFICATIONS. WHERE STRAPS CONNECT TWO MEMBERS TOGETHER, PLACE HALF OF THE REQUIRED FASTENERS INTO EACH MEMBER. PROVIDE SOLID BLOCKING AT ALL BEARING POINTS. SEE SECTION 06100 FOR FASTENER REQUIREMENTS AT TREATED LUMBER. TYPICAL NAILING NOT SHOWN PER PLAN, DETAIL, OR SCHEDULE SHALL CONFORM TO FASTENING SCHEDULE PER IBC TABLE 2304.10.1 OR TO THE ROUGH FRAMING NAILING SCHEDULE ON SHEET S9.10.

NAILS SHALL BE COMMON UNLESS NOTED OTHERWISE COMMON NAIL DIMENSIONS SHALL BE AS FOLLOWS:

NAIL SIZE	DIAMETER	LENGTH
8d	0.131"	2.5"
10d	0.148"	3.0"
12d	0.148"	3.25"
16d	0.162"	3.5"

UNLESS NOTED OTHERWISE PER SHEARWALL SCHEDULE OR PLANS, ANCHOR BOLTS AT SILL PLATES SHALL BE 5/8 INCH DIAMETER WITH 7 INCHES MINIMUM EMBEDMENT INTO CONCRETE AND SHALL BE SPACED NOT MORE THAN 4 FEET APART. THERE SHALL BE A MINIMUM OF TWO BOLTS PER SILL PIECE WITH ONE BOLT LOCATED NOT MORE THAN 12 INCHES NOR LESS THAN 4.5 INCHES FROM EACH END OF THE PIECE. A 3"X3"X0.229" PLATE WASHER SHALL BE PROVIDED FOR ALL ANCHOR BOLTS (COUNTERSUNK PLATE WASHERS SHALL NOT BE ALLOWED).

06100 - PRESERVATIVE TREATED WOOD PRODUCTS
PRESERVATIVE TREATED WOOD SHALL BE REQUIRED FOR;

ALL WOOD THAT FORMS THE STRUCTURAL SUPPORT OF THE BUILDING, BALCONIES PORCHES, OR SIMILAR PERMANENT BUILDING APPURTUENCES THAT ARE EXPOSED TO THE WEATHER WITHOUT ADEQUATE PROTECTION FROM A ROOF, EAVE, OVERHANG OR OTHER COVERING TO PREVENT MOISTURE OR WATER ACCUMULATION AT THE SURFACE OR AT JOINTS BETWEEN MEMBERS.

ALL WOOD INSTALLED ABOVE GROUND AND RESTING ON AN EXTERIOR CONCRETE OR MASONRY FOUNDATION WALL LESS THAN 8 INCHES FROM EXPOSED EARTH.

POSTS OR COLUMNS SUPPORTING PERMANENT STRUCTURES AND SUPPORTED BY A CONCRETE SLAB OR FOOTING THAT IS IN DIRECT CONTACT WITH THE EARTH. EXCEPT;

1. IF LOCATED IN BASEMENTS ON A CONCRETE PIER OR METAL PEDESTAL 1 INCH ABOVE THE SLAB AND SEPARATED THEREFROM BY AN IMPERVIOUS MOISTURE BARRIER.
2. IF IN AN ENCLOSED CRAWL SPACE OR AN UNEXCAVATED AREA WITHIN THE BUILDING PERIPHERY AND SUPPORTED BY A CONCRETE PIER OR PEDESTAL MORE THAN 8 INCHES FROM EXPOSED GROUND AND SEPARATED THEREFROM BY AN IMPERVIOUS MOISTURE BARRIER.
3. SLEEPERS AND SILLS ON A CONCRETE SLAB ON GRADE THAT DOES NOT HAVE AN IMPERVIOUS MOISTURE BARRIER SEPARATION WITH EXPOSED EARTH.
4. LEDGERS AND FURRING ATTACHED DIRECTLY TO THE INTERIOR OF EXTERIOR CONCRETE OR MASONRY WALLS BELOW GRADE.

PRESERVATIVE TREATMENT SHALL BE PER AMERICAN WOOD PRESERVERS' ASSOCIATION (AWPA) SPECIFICATION U1 AND M4 OR APPLICABLE STANDARDS.

ALL FASTENERS (NAILS, BOLTS, ANCHOR BOLTS, PLATES, HANGERS, ETC.) IN CONTACT WITH TREATED LUMBER (P.T. OR FRTW) SHALL BE CORROSION RESISTANT AS FOLLOWS;

ENVIROMENT	SBX/DOT/ZINC BORATE	MCQ	ACQ-C,ACQ-D CA-B, CBA-A
INTERIOR PLATES	G90	G90	SS
EXTERIOR PLATES	N/A	HDG	SS
EXREIOR EXPOSED LUMBER	N/A	HDG	SS

WHERE:
1. G90 = ZINC GALVANIZED FINISH CONTAINING 0.90 OZ. OF ZINC PER SQARE FOOT ALL SIDES.
2. HDG = HOT-DIP GALVANIZED AFTER FABRICATION WITN MINIMUM COATIN OF 2.0 OZ. OF ZINX. PER SQUARE FOOT ALL SIDES.
3. SS = STAINLESS STEEL OF TYPE 303, 304 OR 316.

06110 - FIRE-RETARDANT-TREATED WOOD (FRTW)
FIRE RETARDANT TREATED WOOD SHALL BE TREATED LUMBER AND PLYWOOD IMPREGNATED WITH APPROVED FIRE-RETARDANT CHEMICALS AS LISTED IN THIS SECTION BY A PRESSURE PROCESS. RE: IBC SECTION 2303.2. ALL FRTW LUMBER AND PLYWOOD SHALL BE IDENTIFIED WITH THE GRADE MARK OF AN APPROVED QUALITY ASSURANCE AGENCY.

APPROVED FRTW;
FIREPRO FRTW RE: ICC-ESR-2666
D-BLAZE FRTW RE: ICC-ESR-2645

HANDLING, STORAGE AND INSTALLATION OF FRTW LUMBER AND PLYWOOD SHALL BE PER THE MANUFACTURER RECOMMENDATIONS. FRTW SHALL BE PROTECTED FROM EXPOSURE TO PRECIPITATION DURING SHIPPING, STORAGE AND INSTALLATION. FRTW SHALL NOT BE RIPPED OR MILLED. FRAMING END CUTS AND HOLES MAY USED. RE: ARCHITECT FOR FRTW REQUIREMENTS.

06200 - ROUGH FRAMING
SAWN LUMBER SHALL CONFORM TO WEST COAST LUMBER INSPECTION BUREAU (WCLIB) "GRADING AND DRESSING RULES" NO. 17 LATEST EDITION. SAWN LUMBER SHALL BE S4S AND SURFACED DRIED, 19 PERCENT MAXIMUM MOISTURE CONTENT. PROTECT LUMBER FROM WEATHER AND PROVIDE FURTHER DRYING OF ASSEMBLED FRAMING TO MINIMIZE WOOD SHRINKAGE POTENTIAL. ALL LUMBER EXPOSED TO WEATHER OR IN CONTACT WITH CONCRETE OR MASONRY SHALL BE PRESERVATIVE TREATED UNLESS NOTED OTHERWISE PER PLAN. LUMBER SPECIES, GRADE, AND PROPERTIES FOR EACH USE/LOCATION SHALL BE AS FOLLOWS UNLESS NOTED OTHERWISE PER PLAN/SCHEDULE:

USE/LOCATION	SPECIES	GRADE	Fb (PSI)	Fv (PSI)	Fcp (PSI)	Fc (PSI)	E (PSI)
WALL STUDS/BLOCKING							
2X, 3X 4" WIDE	DOUGLAS FIR-LARCH	NO. 2	900	180	625	1350	1.6E
2X, 3X 6" & WIDER	DOUGLAS FIR-LARCH	NO. 2	900	180	625	1350	1.6E
WALL PLATES							
2X4, 3X4	DOUGLAS FIR-LARCH	STUD	700	180	625	850	1.4E6
2X6, 3X6	DOUGLAS FIR-LARCH	NO. 2	900	180	625	1350	1.6E
JOISTS							
2X, 3X	HEM-FIR	NO. 2	850	150	405	1300	1.3E6
	SPRUCE-PINE-FIR	NO. 2	875	150	425	1150	1.4E6
	DOUGLAS FIR-LARCH	NO. 2	900	180	625	1350	1.6E6
LEDGERS							
2X, 3X	DOUGLAS FIR-LARCH	NO. 2	900	180	625	1350	1.6E6
4X	DOUGLAS FIR-LARCH	NO. 1	1000	180	625	1500	1.7E6
BEAMS AND POSTS							
4X	DOUGLAS FIR-LARCH	NO. 2	900	180	625	1350	1.6E6
6X	DOUGLAS FIR-LARCH	NO. 1	1200	170	625	1000	1.6E6

06300 - JOIST AND BEAM HANGERS
JOIST AND BEAM HANGERS AS NOTED IN THE PLANS SHALL BE AS MANUFACTURED BY SIMPSON STRONG-TIE. EQUIVALENT HARDWARE MAY BE SUBMITTED FOR APPROVAL BY ENGINEER OF RECORD PRIOR TO INSTALLATION. JOIST AND BEAM HANGERS SHALL BE INSTALLED PER MANUFACTURERS' SPECIFICATIONS AND SHALL BE AS FOLLOWS UNLESS NOTED OTHERWISE PER PLANS, SCHEDULES OR DETAILS:

MEMBER SIZE	HANGER
SAWN LUMBER	"LUS" OR "U" SERIES TO MATCH LUMBER SIZE
3.125" WIDE GLULAM BEAM	GLTV3
5.125" WIDE GLULAM BEAM	HGLT5
6.75" WIDE GLULAM BEAM	HGLT7
8.75" WIDE GLULAM BEAM	HGLT9
MANUFACTURED WOOD "I" JOIST	"ITS" SERIES TO MATCH "I" JOIST SIZE
1.75" WIDE PSL OR LVL BEAM	"LBV" TO MATCH DEPTH
3.5" WIDE PSL OR LVL BEAM	"GLTV" SERIES TO MATCH DEPTH
5.25" WIDE PSL OR LVL BEAM	"GLTV" SERIES TO MATCH DEPTH
7" WIDE PSL BEAM	"HGLTV" SERIES TO MATCH DEPTH

06310 - HOLDOWNS
RE: SHEET S1.30 FOR CONTINUOUS ROD HOLDOWNS. TYPICAL, U.N.O..
INDIVIDUAL HOLDOWNS SHALL BE AS MANUFACTURED BY SIMPSON STRONG-TIE CO., INC. USE ALL SPECIFIED FASTENERS. USE NYLON LOCKING NUT ON THE ANCHOR BOLTS. BOLT HOLES SHALL BE A MINIMUM OF 1/32" TO A MAXIMUM OF 1/16" LARGER THAN THE BOLT DIAMETER. STANDARD WASHERS ARE REQUIRED ON THE STUD BOLT OPPOSITE THE HOLDOWN.

06001 - SHRINKAGE OF WOOD FRAMING
SHRINKAGE IN WOOD FRAMING IS DUE TO LOSS OF MOISTURE CONTENT AND TO COMPRESSION OF ASSEMBLIES OF WOOD COMPONENTS. PLUMBING, ELECTRICAL, AND MECHANICAL SYSTEMS AS WELL AS EXTERIOR FINISHES SHALL BE DESIGNED AND BUILT TO ACCOMMODATE 1/4 INCH PER FLOOR WOOD SHRINKAGE. THE USE OF KILN DRIED LUMBER AND PROVIDING A DRYING PROCESS TO THE FRAMING MEMBERS PRIOR TO APPLICATION OF FINISHES WILL HELP CONTROL BUT WILL NOT ELIMINATE SHRINKAGE.

06500 - WOOD SHEATHING
STRUCTURAL WOOD SHEATHING PANELS SHALL HAVE APA GRADE TRADEMARK OF THE AMERICAN PLYWOOD ASSOCIATION. WOOD SHEATHING PANELS SHALL BE C-D INT APA WITH EXTERIOR GLUE (CDX). ORIENTED STRAND BOARD (OSB) PANELS SHALL BE EXPOSURE 1. PANELS SHALL HAVE THE FOLLOWING THICKNESS, SPAN RATING, AND FASTENING UNLESS NOTED OTHERWISE PER PLAN:

	EDGE NAILS	FIELD NAILS
ROOF: 3/4" 48/24 C-D APA CDX T&G	10d AT 6"	10d AT 12"
FLOOR: 3/4" 48/24 C-D APA CDX T&G	10d AT 6"	10d AT 12"
FLOOR: 3/4" APA RATED STURD-I-FLOOR		
OSB: 40/20 T&G	10d AT 6"	10d AT 12"
SHEARWALL: SEE SCHEDULE SHEET S1.20		

ALL ROOF AND FLOOR SHEATHING PANELS SHALL BE INSTALLED FACE GRAIN PERPENDICULAR TO SUPPORTS AND IN A STAGGERED PATTERN UNLESS NOTED OTHERWISE PER PLAN. BLOCKING AT INTERMEDIATE FLOOR AND ROOF SHEATHING JOINTS SHALL NOT BE REQUIRED UNLESS NOTED OTHERWISE PER PLAN. SHEARWALL SHEATHING SHALL BE BLOCKED AT ALL EDGES WITH 2X OR 3X FRAMING PER SHEARWALL SCHEDULE

06700 - STRUCTURAL GLUED LAMINATED TIMBER
GLUED LAMINATED MEMBERS SHALL HAVE AMERICAN INSTITUTE OF TIMBER CONSTRUCTION (AITC) IDENTIFICATION MARK. EXPOSED MEMBERS SHALL RECEIVE ONE COAT OF END SEALER APPLIED IMMEDIATELY AFTER TRIMMING IN EITHER SHOP OR FIELD. SHOP DRAWINGS SHALL BE SUBMITTED PER THE REQUIREMENTS OF SECTION 01330. DESIGN MATERIAL PROPERTIES SHALL BE AS FOLLOWS:

USE	COMBINATION SYMBOL	SPECIES	LAYUP
SIMPLE SPAN BEAM	24F-V4	DF/DF	STANDARD
CONTINUOUS BEAM	24F-V8	DF/DF	BALANCED
CANTILEVER BEAM	24F-V8	DF/DF	BALANCED

UNEXPOSED GLUED LAMINATED TIMBER SHALL BE INDUSTRIAL GRADE. TYPICAL, UNLESS NOTED OTHERWISE. EXPOSED GLUED LAMINATED TIMBER SHALL BE APPEARANCE CLASS PER ARCHITECT.

06800 - MANUFACTURED WOOD BEAMS
MANUFACTURED/ENGINEERED WOOD BEAMS SHALL BE THE SIZE AND TYPE SHOWN ON THE DRAWINGS AS MANUFACTURED BY TRUS-JOIST OR APPROVED EQUAL. STORAGE, ERECTION, AND INSTALLATION SHALL BE PER MANUFACTURER SPECIFICATIONS. MICROLAM AND PARALLAM MEMBERS SHALL NOT HAVE NOTCHES OR DRILLED HOLES WITHOUT PRIOR ENGINEER OF RECORD APPROVAL. SHOP DRAWINGS SHALL BE SUBMITTED PER THE REQUIREMENTS OF SECTION 01330. DESIGN MATERIAL PROPERTIES SHALL BE AS FOLLOWS:

MEMBER	E (PSI)	Fb (PSI)	Fcp (PSI)	Fv (PSI)
LVL = MICROLAM	1.9E6	2600	750	285
PSL = PARALLAM	2.0E6	2900	650	290
LSL = 1.75" TIMBERSTRAND	1.5E6	2250	750	400
LSL RIM = 1.5" TIMBERSTRAND RIM BOARD (ROOF ONLY)				

06900 - PREFABRICATED PLYWOOD WEB JOISTS
PREFABRICATED PLYWOOD WEB JOISTS SHALL BE THE SIZE AND TYPE SHOWN ON THE DRAWINGS AS MANUFACTURED BY TRUS-JOIST OR APPROVED EQUAL. STORAGE, ERECTION, AND INSTALLATION SHALL BE PER MANUFACTURER SPECIFICATIONS. JOIST FLANGES SHALL NOT BE CUT. DRILLED HOLES IN WEB SHALL BE PER MANUFACTURER REQUIREMENTS. SHOP DRAWINGS SHALL BE SUBMITTED PER THE REQUIREMENTS OF SECTION 01330. DESIGN LOADING AND DEFLECTION CRITERIA SHALL BE AS FOLLOWS:

TOP CHORD LIVE LOAD	SEE LIVE LOADS IN SECTION 01200
TOP CHORD DEAD LOAD	12 PSF
BOTTOM CHORD DEAD LOAD	6 PSF
MECHANICAL LOADS	SEE MECHANICAL PLANS
LIVE LOAD DEFLECTION	L/480

07000 - PREFABRICATED PLYWOOD WEB JOISTS
PREFABRICATED PLYWOOD WEB JOISTS SHALL BE THE SIZE AND TYPE SHOWN ON THE DRAWINGS AS MANUFACTURED BY TRUS-JOIST OR APPROVED EQUAL. STORAGE, ERECTION, AND INSTALLATION SHALL BE PER MANUFACTURER SPECIFICATIONS. JOIST FLANGES SHALL NOT BE CUT. DRILLED HOLES IN WEB SHALL BE PER MANUFACTURER REQUIREMENTS. SHOP DRAWINGS SHALL BE SUBMITTED PER THE REQUIREMENTS OF SECTION 01330. DESIGN LOADING AND DEFLECTION CRITERIA SHALL BE AS FOLLOWS:

TOP CHORD LIVE LOAD	SEE LIVE LOADS IN SECTION 01200
TOP CHORD DEAD LOAD	12 PSF
BOTTOM CHORD DEAD LOAD	6 PSF
MECHANICAL LOADS	SEE MECHANICAL PLANS
LIVE LOAD DEFLECTION	L/480

06200 - ROUGH FRAMING
SAWN LUMBER SHALL CONFORM TO WEST COAST LUMBER INSPECTION BUREAU (WCLIB) "GRADING AND DRESSING RULES" NO. 17 LATEST EDITION. SAWN LUMBER SHALL BE S4S AND SURFACED DRIED, 19 PERCENT MAXIMUM MOISTURE CONTENT. PROTECT LUMBER FROM WEATHER AND PROVIDE FURTHER DRYING OF ASSEMBLED FRAMING TO MINIMIZE WOOD SHRINKAGE POTENTIAL. ALL LUMBER EXPOSED TO WEATHER OR IN CONTACT WITH CONCRETE OR MASONRY SHALL BE PRESERVATIVE TREATED UNLESS NOTED OTHERWISE PER PLAN. LUMBER SPECIES, GRADE, AND PROPERTIES FOR EACH USE/LOCATION SHALL BE AS FOLLOWS UNLESS NOTED OTHERWISE PER PLAN/SCHEDULE:

USE/LOCATION	SPECIES	GRADE	Fb (PSI)	Fv (PSI)	Fcp (PSI)	Fc (PSI)	E (PSI)
WALL STUDS/BLOCKING							
2X, 3X	HEM-FIR	NO. 2	850	150	405	1300	1.3E6
4" WIDE	SPRUCE-PINE- FIR	NO. 2	875	150	425	1150	1.4E6
WALL PLATES							
2X4, 3X4	HEM-FIR	STUD	675	150	405	800	1.2E6
	SPRUCE-PNE-FIR	STUD	675	150	425	725	1.2E6
2X6, 3X6	HENM-FIR	NO. 2	850	150	405	1300	1.3E6
	SPRUCE-PINE-FIR	NO.2	875	150	425	1150	1.4E6

08100 - ADHESIVE ANCHORS IN CONCRETE
ALL ADHESIVE ANCHORS SHALL BE ICC APPROVED AND INSTALLED PER ICC EVALUATION REPORT REQUIREMENTS. BOLT SPACING AND EMBEDMENTS SHALL BE AS DESIGNATED ON THE DRAWINGS TYPICAL, UNLESS NOTED OTHERWISE. ALL ADHESIVE ANCHORS SHALL BE INSTALLED WITH CONTINUOUS INSPECTION PER THE INSPECTION SCHEDULE ON SHEET S1.10, U.N.O..

ADHESIVE ANCHORS IN CONCRETE SHALL BE THE FOLLOWING TYPES OR A PREAPPROVED EQUAL;
POWERS PURE 110+ (ICC ESR-3298)
POWERS PE 1000+ (ICC ESR 2583)
POWERS AC 100+ GOLD (ICC ESR-2582)

BOLT SIZE	MINIMUM EFFECTIVE EMBEDMENT U.N.O.
1/2" DIA. OR #4 REBAR	4"
5/8" DIA. OR #5 REBAR	5"
3/4" DIA. OR #6 REBAR	6"

08200 - EXPANSION BOLTS IN CONCRETE
ALL EXPANSION BOLTS SHALL BE ICC APPROVED AND INSTALLED PER ICC EVALUATION REPORT REQUIREMENTS. BOLT SPACING AND EMBEDMENTS SHALL BE AS DESIGNATED ON THE DRAWINGS TYPICAL, UNLESS NOTED OTHERWISE. ALL EXPANSION BOLTS SHALL BE INSTALLED WITH CONTINUOUS INSPECTION PER THE INSPECTION SCHEDULE ON SHEET S1.10.

EXPANSION BOLTS IN CONCRETE SHALL BE WEDGE TYPE ANCHORS OF THE FOLLOWING TYPES OR A PREAPPROVED EQUAL;
SIMPSON STRONG BOLT 2 (ICC ESR-3037)
HILTI KWIK BOLT TZ (ICC ESR-1917)

BOLT SIZE	MINIMUM EFFECTIVE EMBEDMENT
1/2" DIA.	3 1/4"
5/8" DIA.	4"
3/4" DIA.	4 3/4"

08300 - EXPANSION BOLTS IN CONCRETE
ALL EXPANSION BOLTS SHALL BE ICC APPROVED AND INSTALLED PER ICC EVALUATION REPORT REQUIREMENTS. BOLT SPACING AND EMBEDMENTS SHALL BE AS DESIGNATED ON THE DRAWINGS TYPICAL, UNLESS NOTED OTHERWISE. ALL EXPANSION BOLTS SHALL BE INSTALLED WITH CONTINUOUS INSPECTION PER THE INSPECTION SCHEDULE ON SHEET S1.10.

EXPANSION BOLTS IN CONCRETE SHALL BE WEDGE TYPE ANCHORS OF THE FOLLOWING TYPES OR A PREAPPROVED EQUAL;
SIMPSON STRONG BOLT 2 (ICC ESR-3037)
HILTI KWIK BOLT TZ (ICC ESR-1917)

BOLT SIZE	MINIMUM EFFECTIVE EMBEDMENT
1/2" DIA.	3 1/4"
5/8" DIA.	4"
3/4" DIA.	4 3/4"

08400 - SCREW ANCHORS
CONCRETE ;
SCREW ANCHORS SPECIFIED IN THE DRAWINGS SHALL BE SIMPSON STRONG-TIE TITEN HD. ANCHOR DIAMETER AND EMBEDMENT PER PLAN. AS A MINIMUM PERIODIC SPECIAL INSPECTION IS REQUIRED PER SECTION 4.4 OF ESR-2712.

MASONRY;
SCREW ANCHORS SPECIFIED IN THE DRAWINGS SHALL BE SIMPSON STRON-TIE TITEN HD. ANCHOR DIAMETER AND EMBEDMENT PER PLAN. INSTALL PER SECTION 4.0 OF ESR-1058. DO NOT INSTALL 1 1/4" OF HEAD JOINT. (RE: FIGURE 2 OF ESR-1056). AS MINIMUM PERIODIC SPECIAL INSPECTION IS REQUIRED PER SECTION 4.2 OF ESR-1056.

10410 - SIGNS
1. ALL SIGNS SHALL BE DESIGNED AND PROVIDED BY OTHERS.
2. ALL SIGNS SHALL CONFORM TO THE IBC 2015.
3. ALL ATTACHMENTS TO THE BUILDING SHALL CONFORM TO THE IBC 2015.
4. SHOP DRAWINGS, INCLUDING DETAILS OF ATTACHMENT TO THE BUILDING SHALL BE SUBMITTED TO THE ENGINEER OF RECORD.
5. RE: SHEET S1.00 FOR DESIGN CRITERIA FOR THIS PROJECT.

CT ENGINEERING INC.
Structural Engineers
180 Nickerson Street Suite 302 Seattle, WA 98109
206.285.4512 (V) 206.285.0618 (F)
www.ctengineering.com

01.21.2021

No.	REVISION	DATE

JOB #: 20021
ENG: TSW
CAD: TSW
SCALE: 3/4" = 1'-0"
KEY ISSUE DATES:
PERMIT: 01.21.2021

FOR PERMIT

Structural Notes
BLOSSOM APARTMENTS
214-220 5th Avenue S
Seattle, WA 98104

S1.02

C:\Users\TWandschneider\Documents\20021 - Blossom Apartments - v20_tylerw@ctengineering.com.rvt
1/21/2021 11:15:34 AM

REQUIRED SPECIAL INSPECTIONS AND TESTS OF SOILS

RE: IBC 2015 TABLE 1705.6

	VERIFICATION AND INSPECTION TASK	CONTINUOUS SPECIAL INSPECTION	PERIODIC SPECIAL INSPECTION
1.	VERIFY MATERIALS BELOW SHALLOW FOUNDATIONS ARE ADEQUATE TO ACHIEVE THE DESIGN BEARING CAPACITY.	-	X
2.	VERIFY EXCAVATIONS ARE EXTENDED TO PROPER DEPTH AND HAVE REACHED PROPER MATERIAL.	-	X
3.	PERFORM CLASSIFICATION AND TESTING OF COMPACTED FILL MATERIALS.	-	X
4.	VERIFY USE OF PROPER MATERIALS, DENSITIES AND LIFT THICKNESSES DURING PLACEMENT AND COMPACITON OF COMPACTED FILL.	X	-
5.	PRIOR TO PLACEMENT OF COMPACTED FILL, OBSERVE SUBGRADE AND VERIFY THAT SITE HAS BEEN PREPARED PROPERLY.	-	X

REQUIRED SPECIAL INSPECTIONS OF DRIVEN DEEP FOUNDATION ELEMENTS

RE: IBC 2015 TABLE 1705.7

	ELEMENT TYPE	CONTINUOUS	PERIODIC
1.	VERIFY ELEMENT MATERIALS, SIZES AND LENGTHS COMPLY WITH THE REQURIEMENTS	X	-
2.	DETERMINE CAPACITIES OF TEST ELEMENTS AND CONDUCT ADDITIONAL LOAD TESTS AS REQUIRED	X	-
3.	INSPECT DRIVING OPERATIONS AND MAINTAIN COMPLETE AND ACCURATE RECORDS FOR EACH ELEMENT	X	-
4.	VERIFY PLACEMENT LOCATIONS AND PLUMBNESS, CONFIRM TYPE AND SIZE OF HAMMER, RECORD NUMBER OF BLOWS PER FOOT OF PENETRATION, DETERMINE REQUIRED PENETRATIONS TO ACHIEVE DESIGN CAPACITY, RECORD TIP AND BUTT ELEVATIONS AND DOCUMENT ANY DAMAGE TO FOUNDATION ELEMENT	X	-
5.	FOR STEEL ELEMENTS, PERFORM ADDITIONAL SPECIAL INSPECTIONS PER IBC 1705.2	-	-
6.	FOR CONCRETE ELEMENTS AND CONCRETE FILLED ELEMENTS, PERFORM TESTS AND ADDITIONAL SPECIAL INSPECTIONS PER IBC 1705.3	-	-
7.	FOR SPECIALTY ELEMENTS, PERFORM ADDITIONAL INSPECTIONS AS DETERMINED BY THE REGISTERED DESIGN PROFESSIONAL IN RESPONSIBLE CHARGE.	-	-

REQUIRED SPECIAL INSPECTIONS OF CAST-IN-PLACE DEEP FOUNDATION ELEMENTS

RE: IBC 2015 TABLE 1705.8

	ELEMENT TYPE	CONTINUOUS	PERIODIC
1.	INSPECT DRILLING OPERATIONS AND MAINTAIN COMPLETE AND ACCURATE RECORDS FOR EACH ELEMENT	X	-
2.	VERIFY PLACEMENT LOCATIONS AND PLUMBNESS, CONFIRM ELEMENT DIAMETERS, BELL DIAMETERS, LENGTHS, EMBEDMENT INTO BEDROCK AND ADEQUATE END-BEARING STRATA CAPACITY. RECORD CONCRETE AND GROUT VOLUMES	X	-
3.	FOR CONCRETE ELEMENTS, PERFORM TEST AND ADDITIONAL SPECIAL INSPECTIONS PER IBC 1705.3	-	-

INSPECTIONS FOR HELICAL PILES

RE: IBC 2015 SECTION 1705.9

	INSPECTION ITEMS
	CONTINUOUS SPECIAL INSPECTION SHALL BE PERFORMED DURING INSTALLATION OF HELICAL PILE FOUNDATIONS. THE FOLLOWING INFORMATION SHALL BE RECORDED:
1.	INSTALLATION EQUIPMENT USED
2.	PILE DIMENSIONS
3.	TIP ELEVATIONS
4.	FINAL DEPTH
5.	FINAL INSTALLATION TORQUE
6.	ANY OTHER PERTINENT INSTALLAATION DATA

REQUIRED VERIFICATION AND INSPECTION OF CONCRETE CONSTRUCTION

RE: IBC 2015 TABLE 1705.3

	VERIFICATION AND INSPECTION	CONTINUOUS	PERIODIC
1.	INSPECTION OF REINFORCING STEEL, INCLUDING PRESTRESSING TENDONS AND PLACEMENT.	-	X
2.	INSPECTION OF REINFORCING STEEL WELDING IN ACCORDANCE WITH TABLE 1705.2.2, ITEM 5b.	-	-
3.	INSPECTION OF ANCHORS CAST IN CONCRETE.	-	X
4.	INSPECTION OF ANCHORS POST-INSTALLED IN HARDENED CONCRETE MEMBERS.	-	X
	a. ADHESIVE ANCHORS INSTALLED HORIZONTALLY OR UPWARDLY INCLINED ORIENTATIONS TO RESIST SUSTAINED TENSION LOADS	X	-
	b. MECHANICAL AND ADHESIVE ANCHORS NOT DEFINED IN 4a.	-	X
5.	VERIFYING USE OF REQUIRED DESIGN MIX.	-	X
6.	PRIOR TO CONCRETE PLACEMENT, FABRICATE SPECIMENS FOR STRENGTH TESTS, PERFORM SLUMP AND AIR CONTENT TESTS, AND DETERMINE THE TEMPERATURE OF CONCRETE.	X	-
7.	INSPECTION OF CONCRETE AND SHOTCRETE PLACEMENT FOR PROPER APPLICATION TECHNIQUES.	X	-
8.	INSPECTION FOR MAINTENANCE OF SPECIFIED CURING TEMPERATURE AND TECHNIQUES.	-	X
9.	INSPECTION OF PRESTRESSED CONCRETE:		
	a. APPLICATION OF PRESTRESSING FORCES.	X	-
	b. GROUTING OF BONDED PRESTRESSING TENDONS IN THE SEISMIC-FORCE-RESISTING SYSTEM.	X	-
10.	ERECTION OF PRECAST CONCRETTE MEMBERS.	-	X
11.	VERIFICATION OF IN-SITU CONCRETE STRENGTH, PRIOR TO STRESSING OF TENSONS IN POST TENSIONED CONCRETE AND PRIOR TO REMOVAL OF SHORES AND FORMS FROM BEAMS AND STRUCTURAL SLABS.	-	X
12.	INSPECT FORMWORK FOR SHAPE, LOCATION AND DIMENSIONS OF THE CONCRETE MEMBER BEING FORMED.	-	X

IINSPECTIONS FOR WOOD CONSTRUCTION

RE: IBC 2015 SECTION 1705.5

		INSPECTIONS REQUIRED
1.		SPECIAL INSPECTIONS OF PREFABRICATED WOOD STRUCTURAL ELEMENTS AND ASSEMBLIES SHALL BE IN ACCORDANCE WITH IBC 1704.2.5
2.		HIGH-LOAD DIAPHRAGMS (ALL DESIGNATED DIAPHRAGMS PER IBC 2306.2) SHALL BE INSTALLED ACCORDING TO THE PROVISIONS OF IBC 1704.2. THE FOLLOWING SHALL BE INSPECTED:
	a.	WOOD STRUCTURAL PANEL SHEATHING - CONFIRM GRADE AND THICKNESS PER APPROVED CONSTRUCTION DOCUMENTS
	b.	VERIFY SIZE OF FRAMING MEMBERS AT ADJOINING PANEL EDGES
	c.	VERIFY NAIL OR STAPLE DIAMETER AND LENGTH
	d.	VERIFY NUMBER OF FASTENER LINES AND THE SPACING BETWEEN EACH FASTENER LINE AND AT EDGE MARGINS
3.		FOR METAL-PLATE-CONNECTED WOOD TRUSSES SPANNING 60FT OR MORE, THE SPECIAL INSPECTOR SHALL VERIFY THAT THE TEMPORARY RESTRAINT/BRACING AND PERMANENT INDIVIDUAL TRUSS MEMBER RESTRAINT/BRACING ARE INSTALLED ACCORDING TO THE APPROVED TRUSS SUBMITTAL PACKAGE
4.		SEISMIC RESISTING ELEMENTS: PERIODIC SPECIAL INSPECTION IS REQUIRED FOR NAILING, BOLTING, ANCHORING AND OTHER FASTENING OF ELEMENTS OF THE SEISMIC FORCE-RESISTING SYSTEM - INCLUDING WOOD SHEAR WALLS, WOOD DIAPHRAGMS, DRAG-STRUTS, BRACES AND HOLDOWNS - EXCEPT THAT SUCH IS NOT REQUIRED WHERE THE SHEATHING FASTENER SPACING IS MORE THAN 4"OC.

REQUIRED SPECIAL INSPECTIONS OF OPEN-WEB JOISTS AND JOIST GIRDERS

RE: IBC 2015 TABLE 1705.2.3

	INSPECTION TYPE	CONTINUOUS	PERIODIC
1.	INSTALLATION OF OPEN-WEB STEEL JOISTS AND JOIST GIRDERS		
	a. END CONNECTIONS - WELDING OR BOLTED	-	X
	b. BRIDGING - HORIZONTAL OR DIAGONAL	-	
	b.i. STANDARD BRIDGING	-	X
	b.ii. BRIDGING THAT DIFFERES FROM THE SJI SPECIFICATIONS RE: 2207.1		X

MINIMUM REQUIREMENTS FOR INSPECTION OF STRUCTURAL STEEL BUILDINGS

RE: IBC 2015 AND AISC 360

SPECIAL INSPECTIONS AND NON-DESTRUCTIVE TESTING OF STRUCTURAL STEEL ELEMENTS IN BUILDINGS, STRUCTURES AND PORTIONS THEREOF SHALL BE IN ACCORDANCE WITH THE QUALITY ASSURANCE INSPECTION REQUIREMENTS OF AISC 360 - CHAPTER N

STEEL INSPECTIONS

RE: IBC 2015 AND AISC 360

	INSPECTION TASKS	QC	QA
O=	OBSERVE ITEMS ON A RANDOM BASIS - OPERATIONS NEED NOT BE DELAYED PENDING THESE INSPECTIONS		
P=	PERFORM THESE TASKS FOR EACH CONNECTION, ELEMENT OR MEMBER		
QC=	QUALITY CONTROL INSPECTION TASKS SHALL BE PROVIDED BY THE FABRICATOR AND ERECTOR.		
QA=	QUALITY ASSURANCE INSPECTION TASKS SHALL BE PERFORMED BY A SPECIAL INSPECTOR. RE: STRUCTURAL NOTES SECTION 01400.		
TABLE N5.4-1 INSPECTION TASKS PRIOR TO WELDING			
	WELDING PROCEDURE SPECIFICATIONS (WPSs) AVAILABLE	P	P
	MANUFACTURER CERTIFICATIONS FOR WELDING CONSUMABLES AVAILABLE	P	P
	MATERIAL IDENTIFICATION (TYPE/GRADE)	O	O
	WELDER IDENTIFICATION SYSTEM	O	O
	FIT-UP OF GROOVE WELDS (INCLUDING JOINT GEOMETRY); JOINT PREPARATION; DIMENSIONS (ALIGNMENT ROOT OPENING, ROOT FACE, BEVEL); CLEANLINESS (CONDITION OF STEEL SURFACES); TACKING (TACK WELD QUALITY AND LOCATION); BACKING TYPE AND FIT (IF APPLICABLE)	O	O
	CONFIGURATION AND FINISH OF ACCESS HOLES	O	O
	FIT-UP OF FILLET WELDS: DIMENSIONS (ALIGNMENT, GAPS AT ROOT); CLEANLINESS (CONDITION OF STEEL SURFACE); TACKING (TACK WELD QUALITY AND LOCATION)	O	O
	CHECK WELDING EQUIPMENT	O	-
TABLE N5.4-2 INSPECTION TASKS DURING WELDING			
	USE OF QUALIFIED WELDERS	O	O
	CONTROL AND HANDILING OF WELDING CONSUMABLES: PACKAGING; EXPOSURE CONTROL	O	O
	NO WELDING OVER CRACKED TACK WELDS	O	O
	ENVIRONMENTAL CONDITIONS: WIND SPEED WITHIN LIMITS; PRECIPITATION AND TEMPERATURE	O	O
	WPS FOLLOWED: SETTINGS ON WELDING EQUIPMENT; TRAVEL SPEED; SELECTED WELDING MATERIALS; SHIELDING GAS TYPE/FLOW RATE; PREHEAT APPLIED; INTERPASS TEMPERATURE MAINTAINED (MIN/MAX); PROPER POSITION (F, V, H, OH)	O	O
	WELDING TECHNIQUES: INTERPASS AND FINAL CLEANING; EACH PASS WITHIN PROFILE LIMITATIONS; EACH PASS MEETS QUALITY REQUIREMENTS	O	O
TABLE N5.4-3 INSPECTION TASKS AFTER WELDING			
	WELDS CLEANED	O	O
	SIZE, LENGTH AND LOCATION OF WELDS	P	P
	WELDS MEET VISUAL ACCEPTANCE CRITERIA: CRACK PROHIBITION; WELD/BASE-METAL FUSION; CRATER CROSS SECTION; WELD PROFILES; WELD SIZE; UNDERCUT; POROSITY	P	P
	ARC STRIKES	P	P
	k-AREA	P	P
	BACKING REMOVED AND WELD TABS REMOVED (IF REQUIRED)	P	P
	REPAIR ACTIVITIES	P	P
	DOCUMENT ACCEPTANCE OR REJECTION OF WELDED JOINT OR MEMBER	P	P
TABLE N5.6-1 INSPECTION TASKS PRIOR TO BOLTING			
	MANUFACTURERS CERTIFICATIONS AVAILABLE FOR FASTENER MATERIALS	O	P
	FASTENERS MARKED IN ACCORDANCE WITH ASTM REQUIREMENTS	O	O
	PROPER FASTENERS SELECTED FOR THE JOINT DETAIL (GRADE, TYPE, BOLT LENGTH IF THREADS ARE TO BE EXCLUDED FROM SHEAR PLANE)	O	O
	PROPER BOLTING PROCEDURE SELECTED FOR JOINT DETAIL	O	O
	CONNECTING ELEMENTS, INCLUDING THE APPROPRIATE FAYING SURFACE CONDITION AND HOLE PREPARATION, IF SPECIFIED, MEET APPLICABLE REQUIREMENTS	O	O
	PRE-INSTALLATION VERIFICATION TESTING BY INSTALLATION PERSONNEL OBSERVED AND DOCUMENTED FOR FASTENER ASSEMBLIES AND METHODS USED	P	O
	PROPER STORAGE PROVIDED FOR BOLTS, NUTS, WASHERS AND OTHER FASTENER COMPONENTS	O	O
TABLE N5.6-2 INSPECTION TASKS DURING BOLTING			
	FASTENER ASSEMBLIES, OF SUITABLE CONDITION, PLACED IN ALL HOLES AND WASHERS (IF REQURIED) ARE POSITIONED AS REQUIRED	O	O
	JOINT BROUGHT TO THE SNUG-TIGHT CONDITION PRIOR TO THE PRETENSIONING OPERATION	O	O
	FASTENER COMPONENT NOT TURNED BY WRENCH PREVENTED FROM ROTATING	O	O
	FASTENERS ARE PRETENSIONED IN ACCORDANCE WITH THE RCSC SPEC, PROGRESSING SYSTEMATICALLY FROM THE MOST RIGID POINT TOWARD THE FREE EDGES	O	O
TABLE N5.6-3 INSPECTION TASKS AFTER BOLTING			
	DOCUMENT ACCEPTANCE OR REJECTION OF BOLTED CONNECTIONS	P	P
TABLE N6.1 INSPECTION OF STEEL ELEMENTS OF COMPOSITE CONSTRUCTION PRIOR TO CONCRETE PLACEMENT			
	PLACEMENT AND INSTALLATION OF STEEL DECK	P	P
	PLACEMENT AND INSTALLATION OF STEEL HEADED STUD ANCHORS	P	P
	DOCUMENT ACCEPTANCE OR REJECTION OF STEEL ELEMENTS	P	P

LEVEL B QUALITY ASSURANCE

RE: IBC 2015 AND ACI 530 TABLE1.19.2

MINIMUM TESTS

VERIFICATION OF SLUMP FLOW AND VISUAL STABILTY INDEX (VSI) AS DELIVERED TO THE PROJECT SITE IN ACCORDANCE WITH SPECIFICATION ARTICLE 1.5 B.1.b.3 FOR SELF-CONSOLIDATING GROUT.

VERIFICATION OF f'm AND f'AAC IN ACCORDANCE WITH SPECIFICATION ARTICLE 1.4 B PRIOR TO CONSTRUCTION, EXCEPT WHERE SPECIFICALLY EXEMPTED BY THIS CODE

REQUIRED SPECIAL VERIFICATION AND INSPECTION OF MASONRY CONSTRUCTION LEVEL B

RE: IBC 2015 SECTION 1705.4

			CONTINUOUS	PERIODIC
1. VERIFY COMPLIANCE WITH APPROVED SUBMITTALS.				
				X
2. AS MASONRY CONSTRUCTION BEGINS, VERIFY THAT THE FOLLOWING ARE IN COMPLIANCE:				
	a.	PROPORTIONS OF SITE-PREPARED MORTAR		X
	b.	CONSTRUCTION OF MORTAR JOINTS		X
	c.	GRADE AND SIZE OF PRESTRESSING TENDONS AND ANCHORAGES		X
	d.	LOCATION OF REINFORCEMENT, CONNECTORS, AND PRESTRESSING TENDONS AND ANCHORAGES		X
	e.	PRESTRESSING TECHNIQUE		X
	f.	PROPERTIES OF THIN-BED MORTAR FOR AAC MASONRY	X (b)	X (c)
3. PRIOR TO GROUTING, VERIFY THAT THE FOLLOWING ARE IN COMPLIANCE:				
	a.	GROUT SPACE		X
	b.	GRADE, TYPE, AND SIZE OF REINFORCEMENT AND ANCHOR BOLTS, AND PRESTRESSING TENDONS AND ANCHORAGES		X
	c.	PLACEMENT OF REINFORCEMENT, CONNECTORS, AND PRESTRESSING TENDONS AND ANCHORAGES		X
	d.	PROPORTIONS OF SITE-PREPARED GROUT AND PRESTRESSING GROUT FOR BONDED TENDONS		X
	e.	CONSTRUCTION OF MORTAR JOINTS		X
4. VERIFY DURING CONSTRUCTION:				
	a.	SIZE AND LOCATION OF STRUCTURAL ELEMENTS		X
	b.	TYPE, SIZE, AND LOCATION OF ANCHORS, INCLUDING OTHER DETAILS OF ANCHORAGE OF MASONRY TO STRUCTURAL MEMBERS, FRAMES, OR OTHER CONSTRUCTION		X
	c.	WELDING REINFORCEMENT	X	
	d.	PREPARATION, CONSTRUCTION, AND PROTECTION OF MASONRY DURING COLD WEATHER (TEMPERATURE BELOW 40°F) OR HOT WEATHER (TEMPERATURE ABOVE 90°F)		X
	e.	APPLICATION AND MEASUREMENT OF PRESTRESSING FORCE	X	
	f.	PLACEMENT OF GROUT AND PRESTRESSING GROUT FOR BONDED TENDONS IS IN COMPLIANCE	X	
	g.	PLACEMENT OF AAC MASONRY UNITS AND CONSTRUCTION OF THIN-BED MORTAR JOINTS	X (b)	X (c)
5. OBSERVE PERPARATION OF GROUT SPECIMENS, MORTAR SPECIMENS, AND/OR PRISMS				
				X

LEVEL C QUALITY ASSURANCE

RE: IBC SECTION 1705.4 AND ACI TABLE 1.19.5

MINIMUM TESTS,

VERIFICATION OF f'm AND f'AAC IN ACCORDANCE WITH SPECIFICATION ARTICLE 1.4 B PRIOR TO CONSTRUCTION AND FOR EVERY 5,000 SQ. FT. DURING CONSTRUCTION.

VERIFICATION OF PROPORTIONS OF MATERIALS IN PREMIXED OR PREBLENDED MORTAR, PRESTRESSING GROUT, AND GROUT OTHER THAN SELF-CONSOLIDATING GROUT, AS DELIVERED TO THE PROJECT SITE.

VERIFICATION OF SLUMP FLOW AND VISUAL STABILTY INDEX (VSI) AS DELIVERED TO THE PROJECT SITE IN ACCORDANCE WITH SPECIFICATION ARTICLE 1.5 B.1.b.3 FOR SELF-CONSOLIDATING GROUT.

REQUIRED SPECIAL VERIFICATION AND INSPECTION OF MASONRY CONSTRUCTION LEVEL C

RE: IBC 2015 SECTION 1705.4

			CONTINUOUS	PERIODIC
1. VERIFY COMPLIANCE WITH APPROVED SUBMITTALS.				
				X
2. VERIFY THAT THE FOLLOWING ARE IN COMPLIANCE:				
	a.	PROPORTIONS OF SITE-MIXED MORTAR, GROUT AND PRESTRESSING GROUT FOR BONDED TENDONS		X
	b.	GRADE, TYPE, AND SIZE OF REINFORCEMENT AND ANCHOR BOLTS, AND PRESTRESSING TENDONS AND ANCHORAGES		X
	c.	PLACEMENT OF MASONRY UNITS AND CONSTRUCTION OF MORTAR JOINTS		X
	d.	PLACEMENT OF REINFORCEMENT, CONNECTORS, AND PRESTRESSING TENDONS AND ANCHORAGES	X	
	e.	GROUT SPACE PRIOR TO GROUTING	X	
	f.	PLACEMENT OF GROUT AND PRESTRESSING GROUT FOR BONDED TENDONS	X	
	g.	SIZE AND LOCATION OF STRUCTURAL ELEMENTS		X
	h.	TYPE, SIZE, AND LOCATION OF ANCHORS, INCLUDING OTHER DETAILS OF ANCHORAGE OF MASONRY TO STRUCTURAL MEMBERS, FRAMES, OR OTHER CONSTRUCTION	X	
	i.	WELDING REINFORCEMENT	X	
	j.	PREPARATION, CONSTRUCTION, AND PROTECTION OF MASONRY DURING COLD WEATHER (TEMPERATURE BELOW 40°F) OR HOT WEATHER (TEMPERATURE ABOVE 90°F)		X
	k.	APPLICATION AND MEASUREMENT OF PRESTRESSING FORCE	X	
	l.	PLACEMENT OF AAC MASONRY UNITS AND CONSTRUCTION OF THIN-BED MORTAR JOINTS	X	
	m.	PROPERTIES OF THIN-BED MORTAR FOR ACC MASONRY	X	
3. OBSERVE PERPARATION OF GROUT SPECIMENS, MORTAR SPECIMENS, AND/OR PRISMS				
			X	

CT ENGINEERING INC.
Structural Engineers
180 Nickerson Street Suite 302 Seattle, WA 98109
206.285.4512 (V) 206.285.0618 (F)
www.ctengineering.com

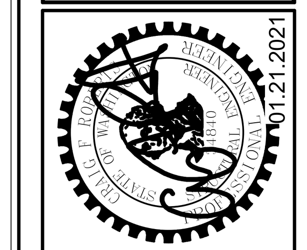
01.21.2021

No.	REVISION	DATE

JOB #: 20021
ENG: TSW
CAD: TSW
SCALE:
KEY ISSUE DATES:
PERMIT: 01.21.2021

FOR PERMIT

IBC 2015 Inspection Tables

BLOSSOM APARTMENTS
214-220 5th Avenue S
Seattle, WA 98104

S1.10

C:\Users\TWandschneider\Documents\20021 - Blossom Apartments - v20_tylerw@ctengineering.com.rvt
1/21/2021 11:15:42 AM

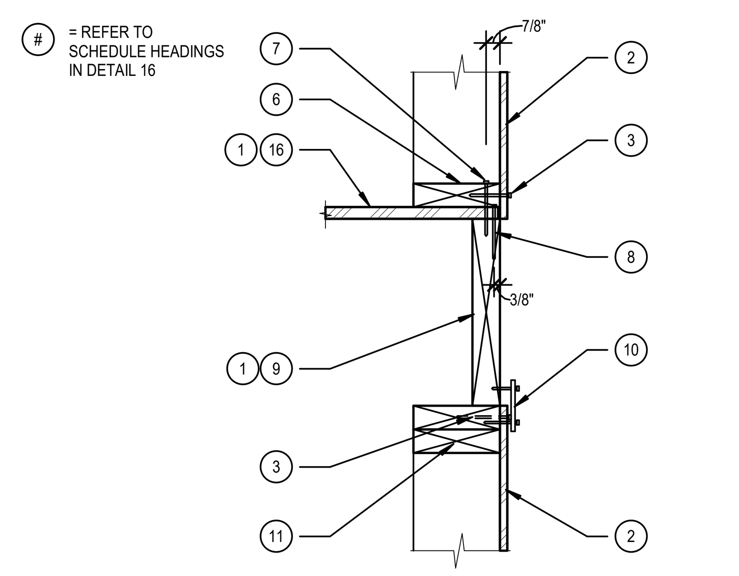

(1 ROW OF PLATE NAILING)

SCALE: 1 1/2" = 1'-0"

3 TYP. EXT./CORR. WALL SHEAR CONNECTION

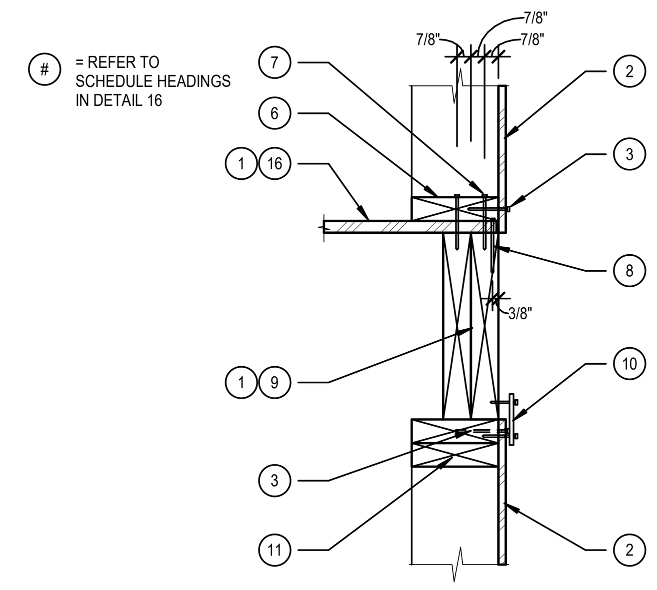

(2 ROWS OF PLATE NAILING)

SCALE: 1 1/2" = 1'-0"

4 TYP. EXT./CORR. WALL SHEAR CONNECTION

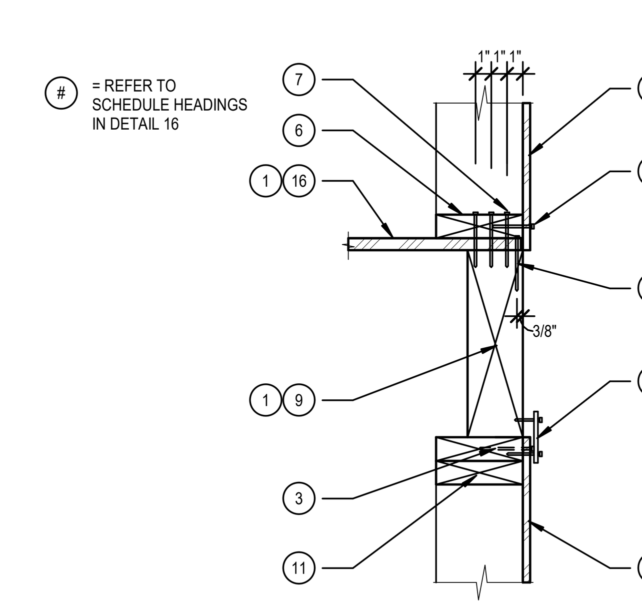

(3 ROWS OF PLATE NAILING)

SCALE: 1 1/2" = 1'-0"

5 TYP. EXT./CORR. WALL SHEAR CONNECTION

(1) Shearwall Schedule - 15/32" APA Rated Sheathing

WALL TYPE	SHEATHING (1)	PANEL EDGE NAILING (3)	FIELD NAILING (4)	2X BOTTOM PLATE NAILING (1) ROWS	SPACING	LTP4 RIM/BLK'G TO TOP PLATE CONN. SPACING (10)	FRAMING AT ADJOINING PANEL EDGES (5)	FOUNDATION SILL PLATE (12)	ANCHOR BOLT SPACING (13)	DETAIL
P6-TN	15/32" SHT. ONE SIDE	6" O.C.	12" O.C.	(1)	14 O.C.	N.A.	2x	2x	48" O.C.	3/S1.02
P6	15/32" SHT. ONE SIDE	6" O.C.	12" O.C.	(1)	4" O.C.	24" O.C.	2x	2x	48" O.C.	3, 8, 13/S1.02
P4	15/32" SHT. ONE SIDE	4" O.C.	12" O.C.	(2)	6" O.C.	16" O.C.	3x OR (2) 2x	2x	38" O.C.	4, 9, 14/S1.02
P3	15/32" SHT. ONE SIDE	3" O.C.	12" O.C.	(2)	4" O.C.	12" O.C.	3x OR (2) 2x	2x	30" O.C.	4, 9, 14/S1.02
P2	15/32" SHT. ONE SIDE	2" O.C.	12" O.C.	(2)	3" O.C.	10" O.C.	3x OR (2) 2x	2x	23" O.C.	4, 9, 14/S1.02
2P4	15/32" SHT. TWO SIDES	4" O.C.	12" O.C.	(3)	4 1/2" O.C.	16" O.C. EACH SIDE	3x OR (2) 2x	2x	19" O.C.	5, 10, 15/S1.02
2P3	15/32" SHT. TWO SIDES	3" O.C.	12" O.C.	(3)	3" O.C.	12" O.C. EACH SIDE	3x OR (2) 2x	2x	14" O.C.	5, 10, 15/S1.02
2P2	15/32" SHT. TWO SIDES	2" O.C.	12" O.C.	(3)	3" O.C.	10" O.C. EACH SIDE	3x OR (2) 2x	2x	11" O.C.	5, 10, 15/S1.02

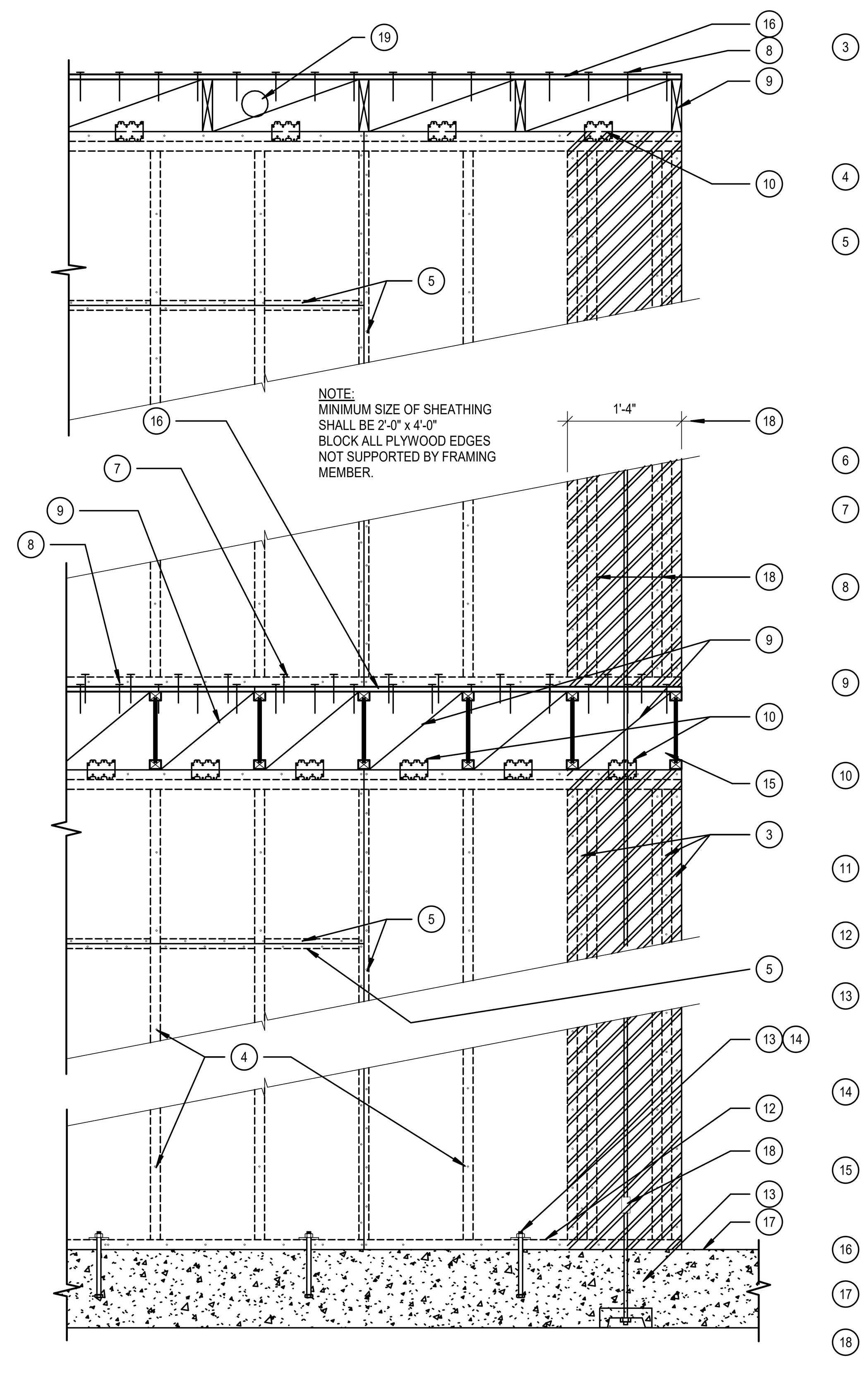

SCALE: 3/4" = 1'-0"

16 SHEARWALL SCHEDULE

(1) (1) SHEARWALL

NAILING:

USE	LENGTH DIA.
BOTTOM PLATE/FRAMING	3 1/4" X 0.148"
PANEL EDGE NAILING	2 3/8" X 0.148"

SPECIAL INSPECTION: PER JURISDICTION (SEE INSPECTION TABLE IN STRUCUTRAL NOTES)
STUD SPACING: 16" O.C. MAX.
STUDS AND PLATE RE: SEC 06200 OF STRCUCTURAL NOTES
ANCHOR BOLT: 5/8" DIA., 7" EMBED. (NO WET STICKING A.B.)

RIM / BLOCKING: SPECIFIED IN PLANS

ALL NAILS, ANCHOR BOLTS AND WASHERS IN CONTACT WITH PRESSURE TREATED WOOD SHALL BE HOT-DIPPED GALVANIZED CONFORMING TO ASTM 153 OR STAINLESS STEEL.

APPROVED RIM PRODUCTS:
TRUS JOIST: 1 3/4" ER-4979
TIMBERSTRAND 1 3/4" LSL 1.5EAT ALL FLOORS
TIMBERSTRAND 1 1/2" AT ROOF ONLY DUR TO NAILING NARROW FACE RESTRICTIONS
PARALLAM PSL 2.0E

SUBSTITUTIONS TO ABOVE REQUIRE ENGINEER OF RECORD APPROVAL PRIOR TO INSTALLATION. SUBMIT DOCUMENTATION BY A CODE APPROVED AGENCY CONFIRMING THE REQUIRED CAPACITIES AND MINIMUM NAIL SPACING FOR THE CONDITIONS DESCRIBED.

(2) (2) WALL SHEATHING
SHEATHING PANELS MAY BE INSTALLED EITHER VERTICALLY OR HORIZONTALLY. ALL PANEL EDGES SHALL BE DIRECTLY FASTENED TO STUDS OR BLOCKING.

(3) (3) PANEL EDGE NAILING
NAILING AT ALL OUTER EDGES OF SHEATHING PANELS IN SHEARWALLS SHALL BE FASTENED PER THE SHEARWALL SCHEDULE. WHERE PANELS ARE APPLIED ON BOTH FACES OF A WALL PANEL JOINTS SHALL BE OFFSET TO FALL ON DIFFERENT FRAMING MEMBERS OR FRAMING SHALL BE 3" NOMINAL. NAILS SHALL BE STAGGERED AT ABUTTING PANEL EDGES WITH 3X FRAMING.

(4) (4) FIELD NAILING
WITHIN THE FIELD OF THE PANEL, AT FRAMING MEMBERS, THE PANELS ARE LESS CLOSELY FASTENED.

(5) (5) FRAMING AT ADJOINING PANEL EDGES
WHERE TWO PIECES OF PLYWOOD JOIN ON A FRAMING MEMBER, THE PANEL EDGE NAILING FROM EACH PANEL IS TO BE STAGGERED. SOME WALLS REQUIRE 3 INCH NOMINAL FRAMING MEMBER (EITHER A STUD OR BLOCKING) AT ADJOINING PANEL EDGES (SEE SHEARWALL SCHEDULE FOR WALL TYPES REQUIRING 3 INCH NOMINAL FRAMING MEMBERS AT ADJOINING PANEL EDGES). 2-2X'S IN LIEU OF 3X'S AT PANEL EDGES ACCEPTABLE PROVIDED STUDS ARE ATTACHED PER BOTTOM PLATE NAILING REQUIREMENTS.WHERE A SINGLE PANEL EDGE LANDS ON A FRAMING MEMBER, A 2 INCH NOMINAL FRAMING MEMBER SHALL BE ACCEPTABLE (AT ENDS OF WALLS FOR EXAMPLE). BLOCK ALL PLYWOOD EDGES NOT SUPPORTED BY FRAMING MEMBERS AND NAIL W/PANEL EDGE NAILING

(6) (6) BOTTOM PLATE
ALL WOOD IN CONTACT WITH CONCRETE SHALL BE PRESSURE TREATED.

(7) (7) BOTTOM PLATE NAILING
LOCATE THE NAILING THROUGH THE BOTTOM PLATE SO AS TO FULLY PENETRATE THE SOLID BLOCKING OR CONTINUOUS RIM BENEATH THE FLOOR SHEATHING, SPACED AS PER THE SHEARWALL SCHEDULE.

(8) (8) FLOOR DIAPHRAGM NAILING
FLOOR DIAPHRAGM NAILING SHALL BE INSTALLED BETWEEN THE SPACING SHOWN FOR BOTTOM PLATE NAILING. LOCATE ADJOINING PANEL EDGES OF FLOOR SHEATHING AWAY FROM SHEARWALLS. FIELD NAILING OF FLOOR SHEATHING MAY BE OMITTED AT SHEARWALL BOTTOM PLATE NAILING.

(9) (9) RIM/BLOCKING
JOIN ADJACENT RIMS AND BLOCKING WITH FACE NAILING AS SPECIFIED ABOVE. SHIM WITH FULL HEIGHT SHIMS, ADJUST FACE NAIL LENGTHS. REFER TO PLANS FOR ADDITIONAL SEISMIC CONNECTIONS AT THE FLOOR OR ROOF LEVEL.

(10) (10) RIM/BLOCKING TO TOP PLATE CONNECTION
THE CONTINUOUS RIM OR SOLID BLOCKING THAT IS PART OF THE SHEARWALL ASSEMBLY SHALL BE CONNECTED TO THE DOUBLE TOP PLATE OR FOUNDATION SILL PLATE WITH APPROVED CONNECTORS AND SPACED PER THE SHEARWALL SCHEDULE.

(11) (11) DOUBLE TOP PLATE
LAP AND SPLICE - SEE PLANS FOR ADDITIONAL SEISMIC CONNECTIONS AT THE FLOOR OR ROOF LEVEL.

(12) (12) FOUNDATION SILL PLATE
ALL WOOD IN CONTACT WITH CONCRETE OR MASONRY SHALL BE PRESERVATIVE TREATED.

(13) (13) ANCHOR BOLTS
FULL DIAMETER ANCHOR BOLTS, ASTM A-307 SHALL BE SECURED IN PLACE PRIOR TO PLACING CONCRETE. MINIMUM EMBEDMENT IS 7 INCHES. MIN (2) BOLTS PER PIECE OF PLATE, W/ (1) BOLT NOT MORE THAN 12" FROM END OF PIECE.

(14) (14) PLATE WASHERS
PLATE WASHERS SHALL BE REQUIRED FOR FOUNDATION SILL PLATE CONNECTIONS. DO NOT RECESS BOLTS IN SILL PLATE UNLESS SPECIFICALLY DETAILED ELSEWHERE.

(15) (15) SQUASH BLOCKS
IN THE FLOOR CAVITY OF PLATFORM FRAMING POST LOADS SHALL BE PROVIDED WITH ADDITIONAL STIFFENERS EQUAL TO THE POST SIZE FROM ABOVE THAT CONTINUES THROUGH THE FLOOR.

(16) (16) DIAPHRAGM
SEE (1) FOR SHEARWALL, FLOOR AND ROOF DIAPHRAGM THICKNESS.

(17) (17) CONCRETE BASE
CONCRETE FOUNDATION OR BASE.

(18) (18) HOLDOWN
SEE HOLDOWN SCHEDULE AND DETAILS SHEETS FOR DETAILS AND ADDITIONAL STUDS REQUIRED.

(19) (19) VENT BLOCKOUTS
BLOCKING MAY BE REMOVED FOR ONE PANEL (16" SPACE MAX) TO ALLOW FOR VENTING OF THE UNIT. THE MINIMUM LENGTH OF SHEARWALL REQUIRED FOR REMOVING ONE BLCOK SHALL BE (4') FOUR FEET

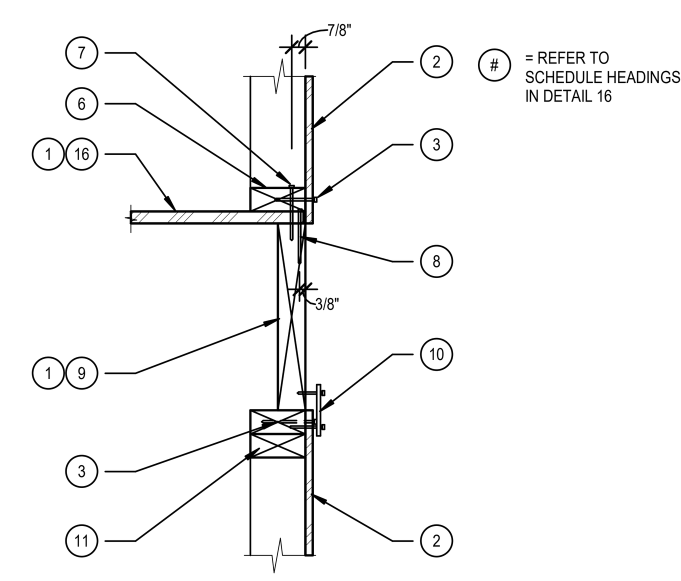

SCALE: 1 1/2" = 1'-0" (1 ROW OF PLATE NAILING)

8 TYP. INTERIOR WALL SHEAR CONNECTION

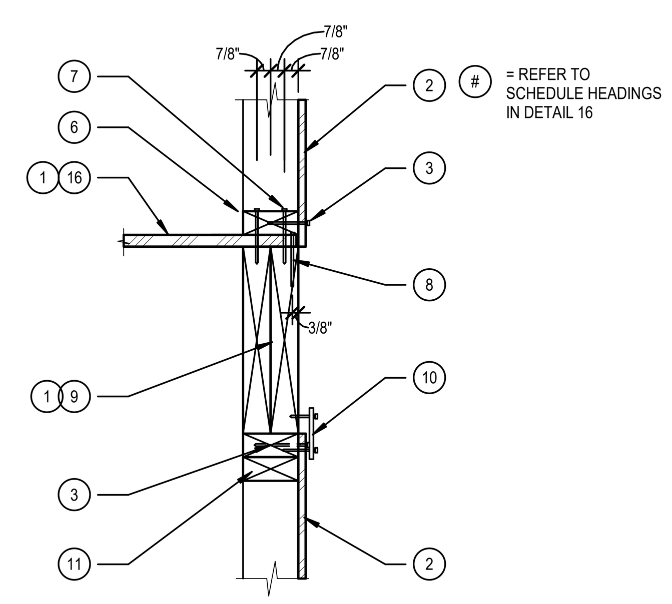

SCALE: 1 1/2" = 1'-0" (2 ROWS OF PLATE NAILING)

9 TYP. INTERIOR WALL SHEAR CONNECTION

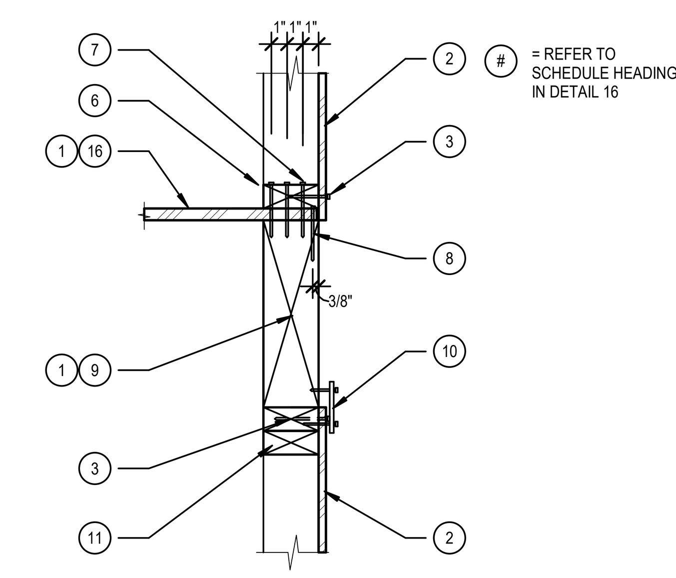

(3 ROWS OF PLATE NAILING)

SCALE: 1 1/2" = 1'-0"

10 TYP. INTERIOR WALL SHEAR CONNECTION

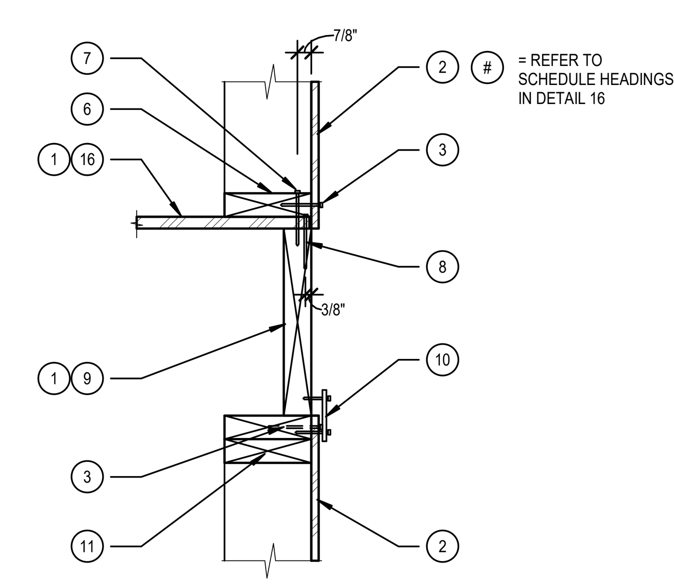

(1 ROW OF PLATE NAILING)

SCALE: 1 1/2" = 1'-0"

13 TYP. PARTY WALL SHEAR CONNECTION

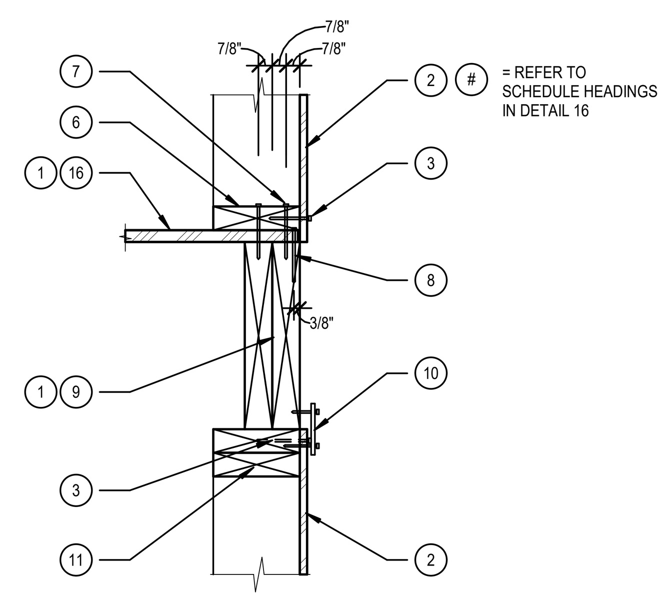

(2 ROWS OF PLATE NAILING)

SCALE: 1 1/2" = 1'-0"

14 TYP. PARTY WALL SHEAR CONNECTION

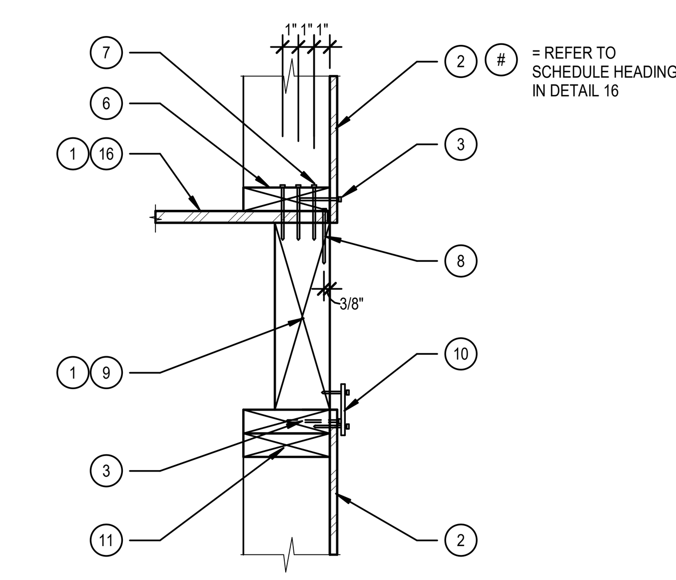

(3 ROWS OF PLATE NAILING)

SCALE: 1 1/2" = 1'-0"

15 TYP. PARTY WALL SHEAR CONNECTION

NOTE: PLATE WASHER SHALL EXTEND TO WITHIN 1/2" OF EDGE OF BOTTOM PLATE ON SIDE(S) WITH SHEATHING. PROVIDE STAGGERED/OFFSET PLACEMENT AS SHOWN ELSE OVERSIZE PLATE WASHERS AS REQUIRED.

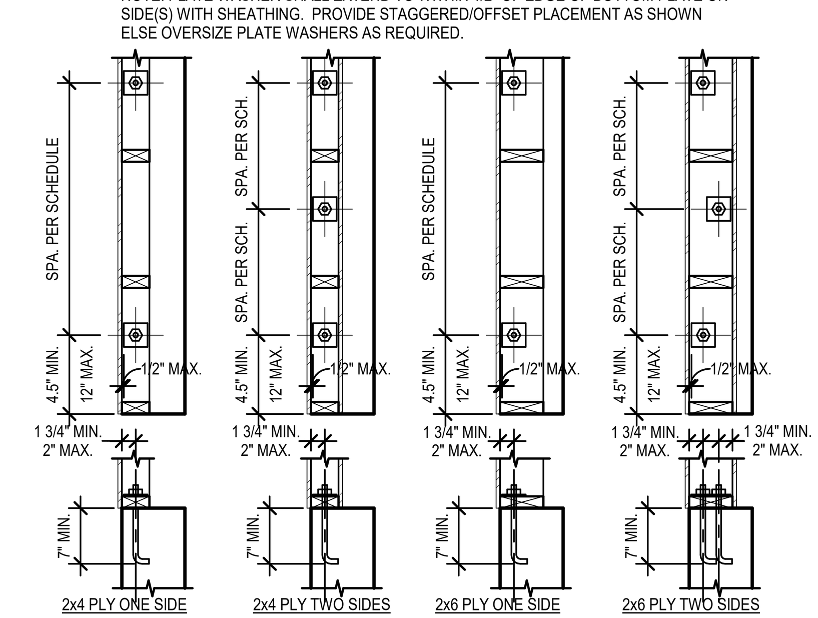

SCALE: 3/4" = 1'-0"

18 ANCHOR BOLT PLACEMENT DETAILS

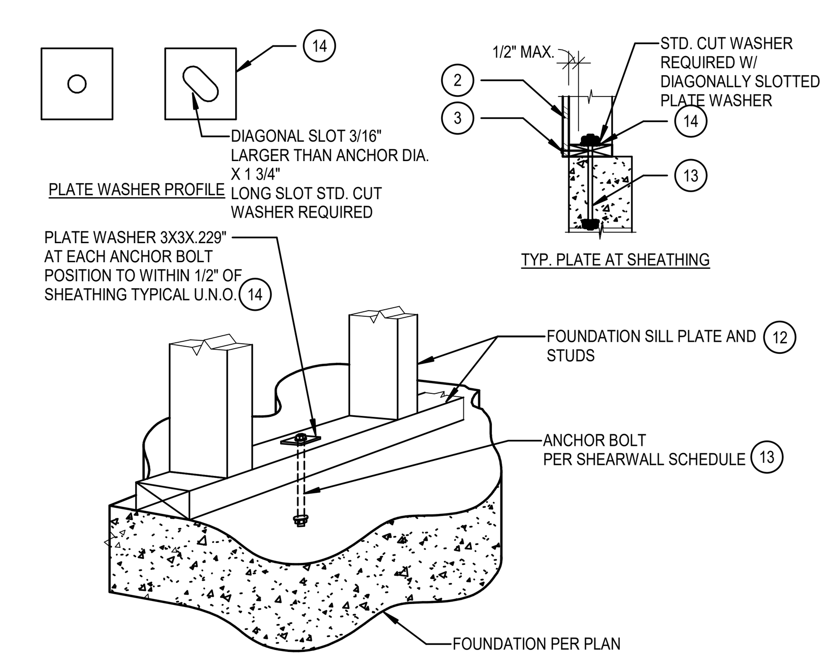

SCALE: 3/4" = 1'-0"

19 TYP. SHEARWALL ANCHOR BOLT TO CONC.

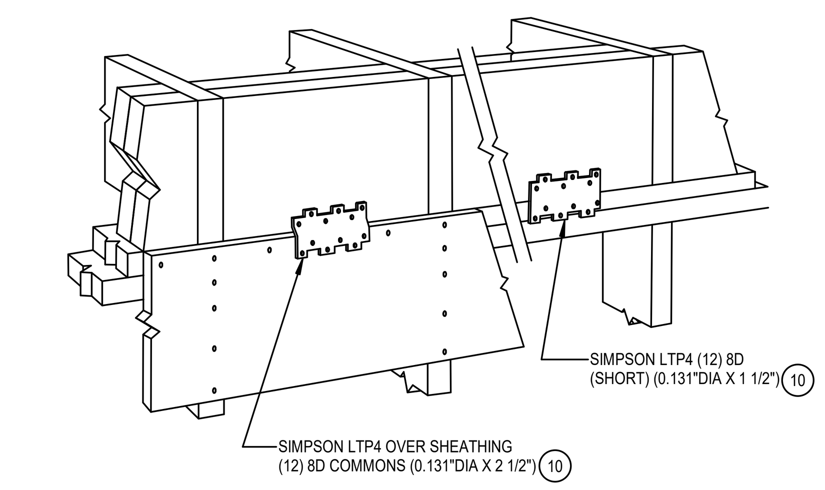

SCALE: 3/4" = 1'-0"

20 TYPICAL SIMPSON LTP4

CT ENGINEERING INC.
Structural Engineers
180 Nickerson Street Suite 302 Seattle, WA 98109
206.285.4512 (V) 206.285.0618 (F)
www.ctengineering.com

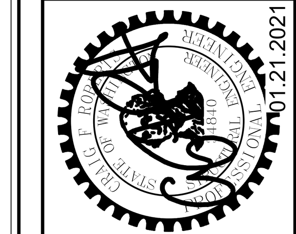

No.	REVISION	DATE

JOB #: 20021
ENG: TSW
CAD: TSW
SCALE: As indicated
KEY ISSUE DATES:
PERMIT: 01.21.2021

FOR PERMIT

Shearwall Schedule & Details

BLOSSOM APARTMENTS
214-220 5th Avenue S
Seattle, WA 98104

S1.20

C:\Users\TWandschneider\Documents\20021 - Blossom Apartments - v20_tylerw@ctengineering.com.rvt
1/21/2021 11:15:46 AM

(#) = REFER TO DETAIL 16 THIS SHEET

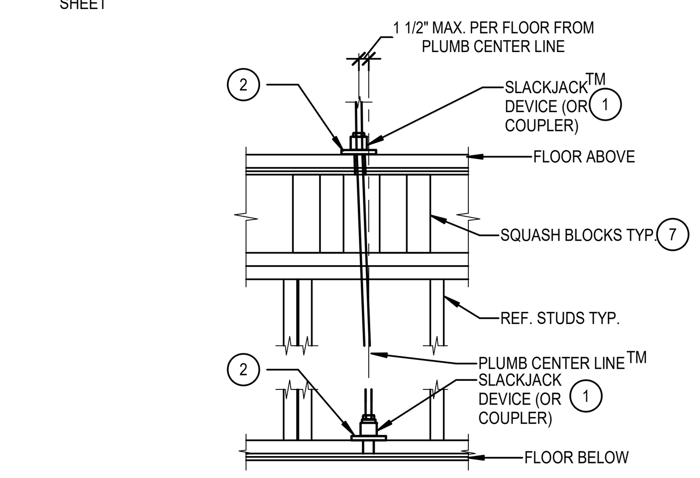

SCALE: 3/4" = 1'-0"

1 ALLOWABLE ROD OFFSET

(#) = REFER TO DETAIL 16 THIS SHEET

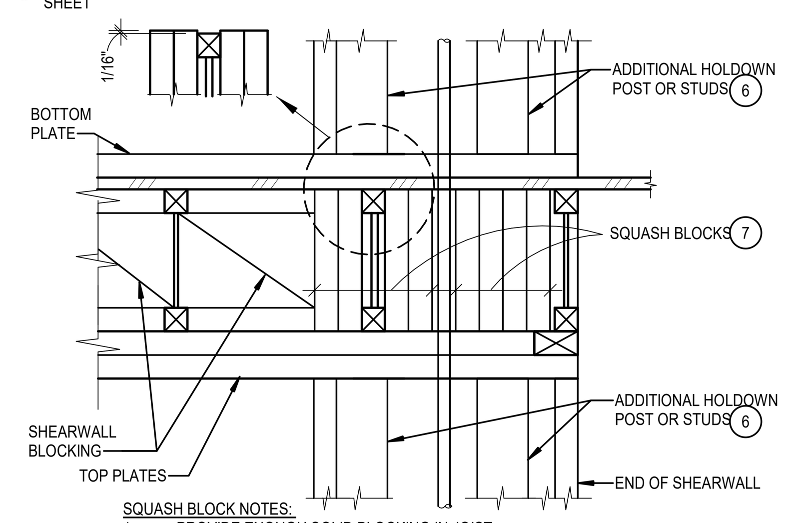

SQUASH BLOCK NOTES:
1. PROVIDE ENOUGH SOLID BLOCKING IN JOIST SPACE TO MATCH WIDTH OF ALL COMPRESSION STUDS OR POSTS OF THE WALL BELOW.
2. INSTALL WITH WOOD GRAIN IN VERTICAL DIRECTION.

SCALE: 3/4" = 1'-0"

2 TYPICAL SQUASH BLOCK

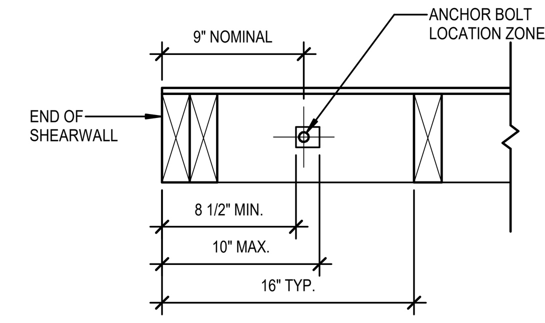

ANCHOR BOLT NOTES:
1. CONTRACTOR SHALL BE RESPONSIBLE FOR COORDINATION OF WALL TYPE AND FRAMING LAYOUT BEFORE LOCATING ANCHOR BOLTS IN CONCRETE.
2. ALL DIMENSIONS ARE TYPICAL U.N.O.
3. ADDITIONAL COMPRESSION STUDS NOT SHOWN FOR CLARITY

SCALE: 3/4" = 1'-0"

3 TYPICAL ANCHOR BOLT LOCATION PLAN

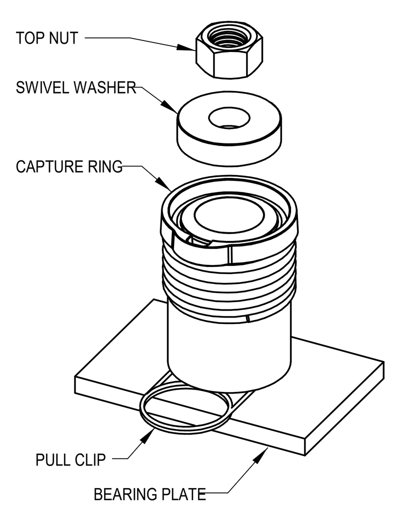

SCALE: 3/4" = 1'-0"

7 SLACKJACK

NOTE: (3) 2X STUDS REQUIRED FOR EACH HOLDOWN AT EACH FLOOR ((2) 2X ONE SIDE, (1) 2X OTHER SIDE). ADDITIONAL STUDS SHOWN IN HOLDOWN SCHEDULE.

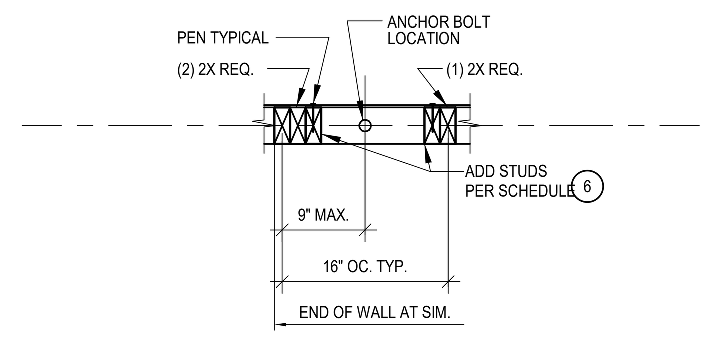

SCALE: 3/4" = 1'-0"

8 TYPICAL WALL DETAIL

NOTE: (3) 2X STUDS REQUIRED FOR EACH HOLDOWN AT EACH FLOOR ((2) 2X ONE SIDE, (1) 2X OTHER SIDE). ADDITIONAL STUDS SHOWN IN HOLDOWN SCHEDULE.

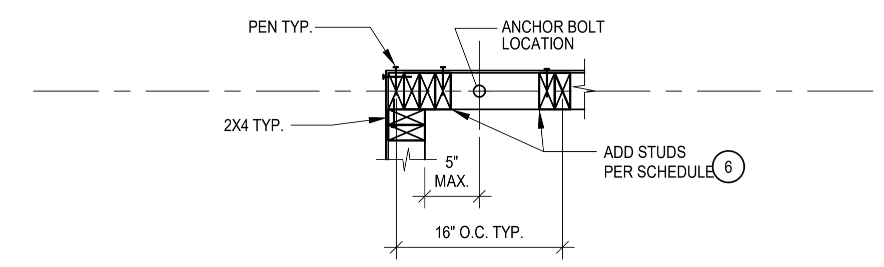

SCALE: 3/4" = 1'-0"

9 TYPICAL CORNER WALL DETAIL

NOTE: (3) 2X STUDS REQUIRED FOR EACH HOLDOWN AT EACH FLOOR ((2) 2X ONE SIDE, (1) 2X OTHER SIDE). ADDITIONAL STUDS SHOWN IN HOLDOWN SCHEDULE.

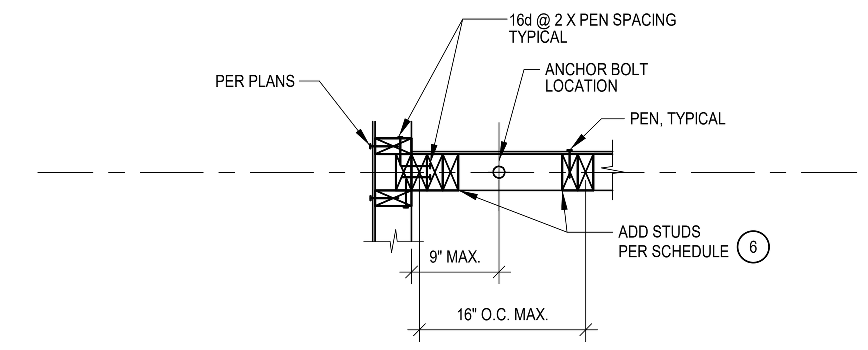

SCALE: 3/4" = 1'-0"

10 TYPICAL WALL INTERSECTION DETAIL

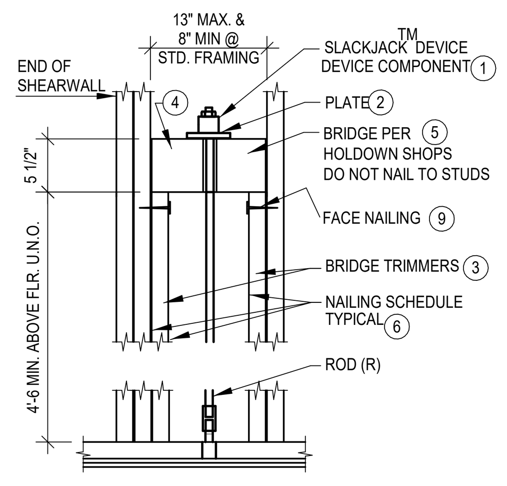

TYPICAL BRIDGE INSTALLATION

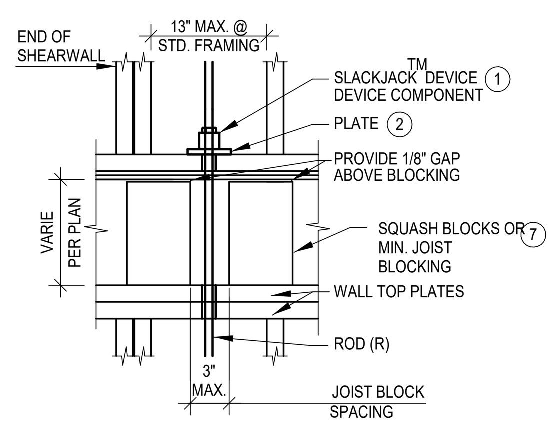

TYPICAL SLACKJACK INSTALLATION

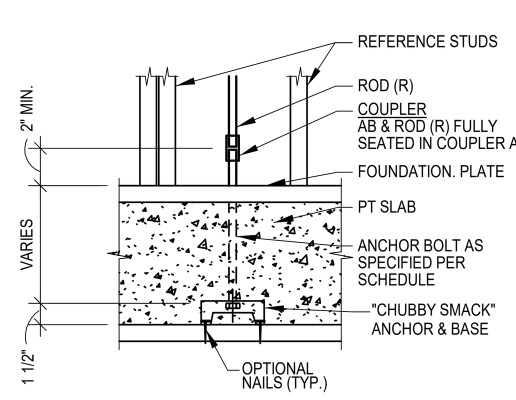

TYPICAL ANCHOR BOLT

HOLDOWN DETAIL NOTES

1. THE SLACKJACK IS A FACTORY ASSEMBLED, PRELOADED COMPRESSION CONTROLLED SHRINKAGE COMPENSATION DEVICE REFERENCE IAMPO UES ER-429.
2. ALL BEARING PLATES SHALL HAVE FULL BEARING CONTACT AREA ON WOOD MEMBERS.
3. BRIDGE SUPPORT STUDS AT THIS LEVEL SHALL BE SYMMETRICALLY PLACED AS SHOWN ON THE SHOP DRAWINGS.
4. TYPICAL COMPRESSION BRIDGE ACROSS COLLECTOR STUDS. DO NOT NAIL STUDS TO BRIDGE.
5. COMPRESSION BRIDGE MEMBER SHALL BE DOUG-FIR, CONSTRUCTION GRADE WITH MINIMUM 800 PSI ALLOWABLE BENDING STRESS. TIMBERSTRAND 1.5 LSL BEAM SUBSTITUTION IS ALLOWED.
6. ALL COLLECTOR STUD MEMBERS SHALL BE NAILED AS PER SHEARWALL EDGE NAILING SCHEDULE IN THE DRAWINGS.
7. SQUASH BLOCKS SHALL BE INSTALLED WITH WOOD GRAIN IN VERTICAL DIRECTION. SEE DETAIL 2 THIS SHEET.
8. FACE NAILING: BRIDGE SUPPORT STUDS SHALL HAVE SUPPLEMENTAL (2) 0.148" DIA. X 3" AT 4" O.C. FACE NAILING IN ADDITION TO THE NAILING REQUIREMENTS OF THE SHEARWALL SCHEDULE. SEE DETAIL 11 THIS SHEET.

SCALE: 3/4" = 1'-0"

16 TYPICAL HOLDOWN DETAILS (EARTHBOUND)

REFER TO HOLDOWN SHOP DRAWINGS FOR TOTAL NUMBER OF TRIMMERS REQUIRED.

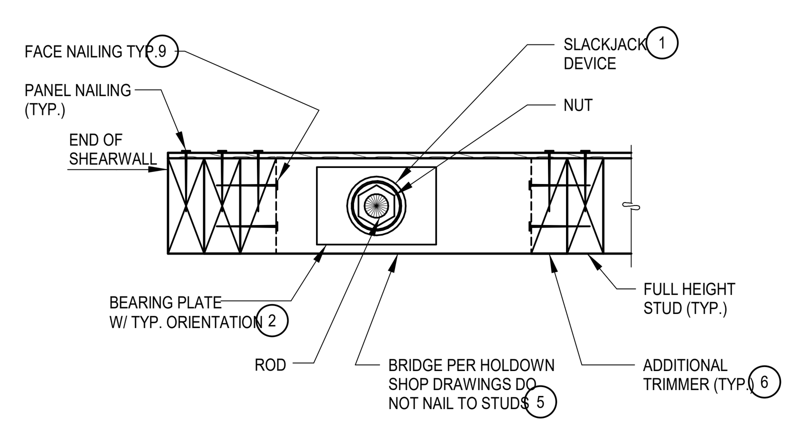

SCALE: 3/4" = 1'-0"

11 BRIDGE TRIMMER NAILING DETAIL

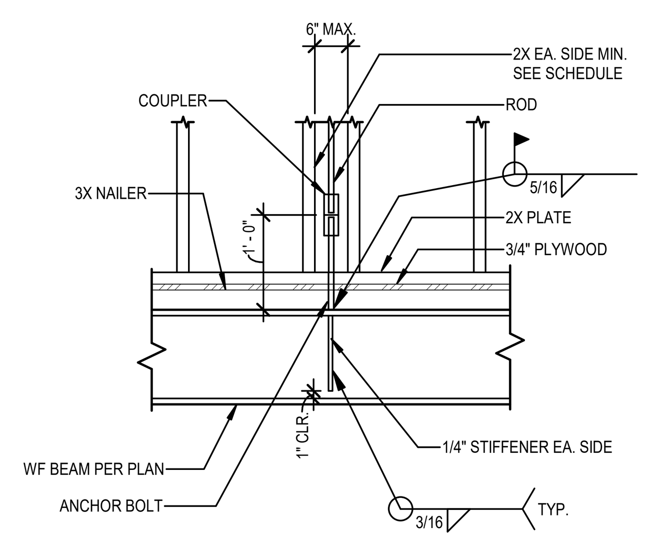

SCALE: 3/4" = 1'-0"

12 TYPICAL HOLDOWN TO STEEL BEAM

ROD SIZE	MIN. HOLE SIZE	MAX. HOLE SIZE
1/2" DIA.	1" DIA.	1 1/8" DIA.
5/8" DIA.	1" DIA.	1 1/8" DIA.
3/4" DIA.	1" DIA.	1 1/8" DIA.
7/8" DIA.	1 1/8" DIA.	1 1/4" DIA.
1" DIA.	1 1/4" DIA.	1 3/8" DIA.
1 1/8" DIA.	1 3/8" DIA.	1 1/2" DIA.
1 1/4" DIA.	1 1/2" DIA.	1 5/8" DIA.

NOTE:
SILICON OR CAULKING SHALL NOT BE USED IN ANY HOLES FOR HOLDOWN RODS. THIS APPLIES TO HOLES THROUGH TOP/BOTTOM PLATES AND BRIDGE

SCALE: 3/4" = 1'-0"

17 ROD HOLE SCHEDULE

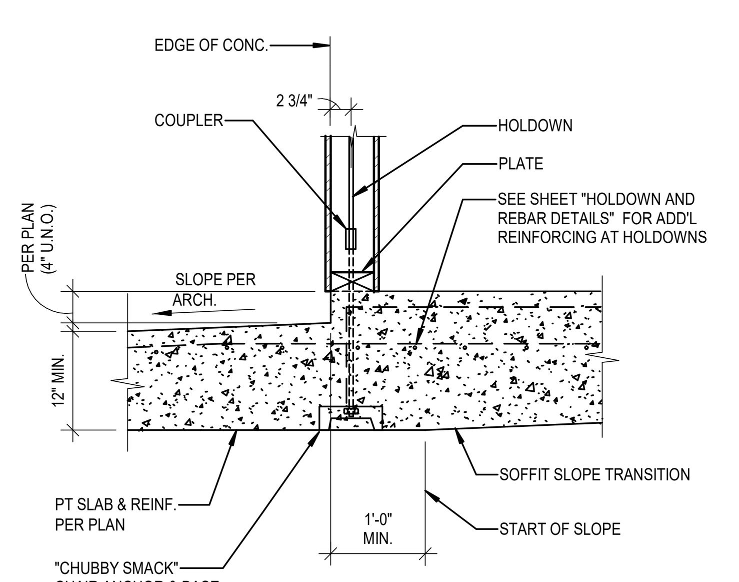

SCALE: 3/4" = 1'-0"

18 TYPICAL SHEARWALL TO PT SLAB

HOLDOWN LOADING AND POST SCHEDULE

FRAMING LEVEL	6A	6B
ADD'L. STUDS:		
AT 2X4 WALL	--	(1) 2X4
AT 2X6 WALL	(1) 2X6	(1) 2X6
LOAD	5000	5200
LEVEL 8		
ADD'L. STUDS:		
AT 2X4 WALL	(1) 2X4	(2) 2X4
AT 2X6 WALL	(1) 2X6	(1) 2X6
LOAD	9200	9900
LEVEL 7		
ADD'L. STUDS:		
AT 2X4 WALL	(3) 2X4	(3) 2X4
AT 2X6 WALL	(1) 2X6	(2) 2X6
LOAD	15100	16200
LEVEL 6		
ADD'L. STUDS:		
AT 2X4 WALL	(5) 2X4	(6) 2X4
AT 2X6 WALL	(3) 2X6	(3) 2X6
LOAD	22160	23500
LEVEL 5		
ADD'L. STUDS:		
AT 2X4 WALL	(8) 2X4	(8) 2X4
AT 2X6 WALL	(4) 2X6	(5) 2X6
LOAD	30100	31600
LEVEL 4		
ADD'L. STUDS:		
AT 2X4 WALL	(10) 2X4	(11) 2X4
AT 2X6 WALL	(6) 2X6	(6) 2X6
LOAD	38300	40100
LEVEL 3		
ANCHOR BOLT	1 1/2" DIA.	1 1/2" DIA.

Holdown Notes

1. HOLDOWNS SHALL BE THE EARTHBOUND HOLDOWN SYSTEM BY EARTHBOUND CORPORATION. SHOP DRAWINGS BEARING THE SEAL AND SIGNATURE OF A WASHINGTON STATE PROFESSIONAL ENGINEER SHALL BE SUBMITTED FOR REVIEW.
2. PROVIDE SLACK JACK DEVICES AT EACH FLOOR AND AT THE BRIDGE BEAM.
3. HOLDOWN DESIGN LOADS (ALLOWABLE) ARE AS INDICATED ABOVE IN POUNDS TENSION.
4. ANCHOR BOLT SHALL BE "CHUBBY SMACK" ANCHORS BY EARTHBOUND INC. ANCHORS ARE TO ACHIEVE LOADS INDICATED.
5. DOUBLE STUDS AT END AND A SINGLE STUD 16" FROM END ARE ASSUMED. SEE **3 / S1.30** DETAIL.
6. NUMBER OF STUDS INDICATED ARE FOR COMPRESSION AND SHALL BE IN ADDITION TO THOSE INDICATED IN NOTE 5. STUD SPECIES AND GRADE TO MATCH SHEARWALL.
7. DO NOT NOTCH OR BORE HOLES THROUGH STUDS EITHER SIDE OF ROD HOLDOWN WITHOUT PRIOR APPROVAL FROM THE STRUCTURAL ENGINEER.
8. SEE DETAIL 17 THIS SHEET FOR ROD HOLE SIZE THROUGH TOP AND BOTTOM PLATES.
9. SEE DETAIL 1 THIS SHEET FOR MAXIMUM HOLDOWN ROD OFFSET.
10. SEE DETAIL 3 THIS SHEET FOR TYPICAL HOLDOWN ANCHOR BOLT LOCATION AT END OF SHEARWALL.
11. SEE "HOLDOWN AND REBAR DETAILS" FOR ADDITIONAL SLAB REINFORCEMENT AT HOLDOWN ANCHOR BOLT.
12. ANCHOR RODS SHALL BE A36 F'u=60KSI (U.N.O.) STANDARD MINIMUM. ANCHOR ROD DENOTED AS HS* SHALL BE ASTM A193 B7 F'u=125KSI.

Holdown Legend

- HOLDOWN DEVICE
- PLATE
- 4X6 BRIDGE
- HOLDOWN ROD
- COUPLER
- JOIST BLOCKING
- NUT/WASHER
- PLATE/NUT

SCALE: 3/4" = 1'-0"

19 HOLDOWN SCHEDULE

CT ENGINEERING INC.
Structural Engineers
180 Nickerson Street Suite 302 Seattle, WA 98109
206.285.4512 (V) 206.285.0618 (F)
www.ctengineering.com

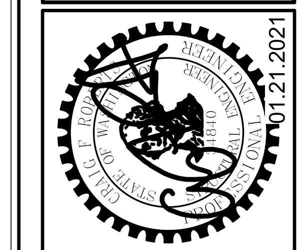

No.	REVISION	DATE

JOB #: 20021
ENG: TSW
CAD: TSW
SCALE: 3/4" = 1'-0"
KEY ISSUE DATES:
PERMIT: 01.21.2021

FOR PERMIT

Holdown Schedule & Details

BLOSSOM APARTMENTS
214-220 5th Avenue S
Seattle, WA 98104

S1.30

C:\Users\TWandschneider\Documents\20021 - Blossom Apartments - v20_tylerw@ctengineering.com.rvt
1/21/2021 11:15:48 AM

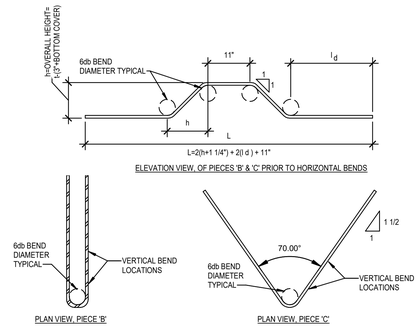

SCALE: 3/4" = 1'-0"

4 ANCHOR REINFORCEMENT AT EDGES, PIECES 'B' & 'C'

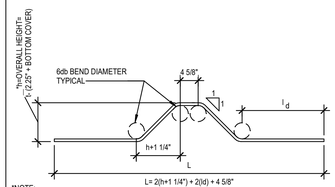

*NOTE:
WHEN LABELED AS PIECE 'A' AT EDGE,
h = t - (1.5" + BOT. COVER)

CONCRETE STRENGTH (psi)	l_d (in.)
2,500	27
3,000	25
4,000	21
5,000	19
L = 2(h + 1 1/4") + 2(ld) + 4 5/8"	

SCALE: 3/4" = 1'-0"

5 FULL LENGTH ANCHOR REINFORCEMENT, PIECE 'A'

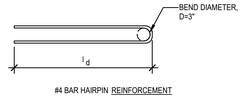

#4 BAR HAIRPIN REINFORCEMENT

CONCRETE STRENGTH (psi)	l_d (in)
2,500	27
3,000	25
4,000	21
5,000	19
L = (h + 1 1/4") + (l_d) + h/2	

SCALE: 3/4" = 1'-0"

9 HAIRPIN REINFORCEMENT AT EDGES

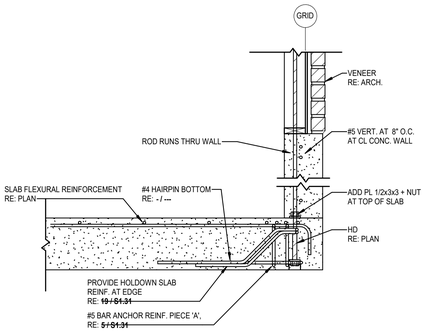

SCALE: 3/4" = 1'-0"

16 HAIRPIN REINFORCEMENT AT EDGES

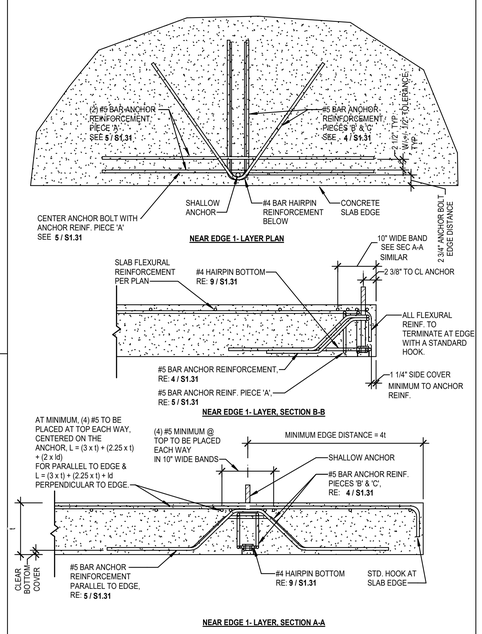

SCALE: 3/4" = 1'-0"

19 HAIRPIN REINFORCEMENT AT EDGES

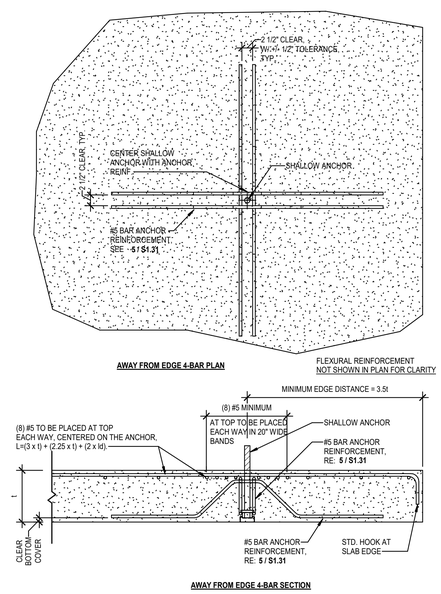

SCALE: 3/4" = 1'-0"

20 AWAY FROM EDGE 4-BAR

CT ENGINEERING INC.
Structural Engineers
160 Nickerson Street, Suite 302 Seattle, WA 98109
206.282.4512 (V) 206.285.0618 (F)
www.ctengineering.com

No.	REVISION	DATE

JOB #: 20021
ENG: TSW
CAD: TSW
SCALE: 3/4" = 1'-0"
KEY ISSUE DATES:
PERMIT: 01.21.2021

FOR PERMIT

Holddown and Rebar Details

BLOSSOM APARTMENTS
214-220 5th Avenue S
Seattle, WA 98104

S1.31

C:\Users\TWoodsmander\Documents\20021 - Blossom Apartments - v20_tsw.rvt\ctengineering.com.rvt

1/21/2021 11:15:50 AM

Foundation Notes

1. ALL SOIL BEARING SURFACES SHALL BE SUBJECT TO INSPECTION AND APPROVAL BY THE GEOTECHNICAL ENGINEER PRIOR TO REINFORCING AND CONCRETE PLACEMENT.
2. CENTER INTERIOR FOOTINGS ON WALLS OR COLUMNS, TYPICAL U.N.O..
3. VERIFY ALL DIMENSIONS PRIOR TO CONSTRUCTION.
4. SEE ARCHITECTURAL SHEETS FOR WALL AND FLOOR DRAIN LOCATIONS.
5. ALL CONCRETE NOT DESIGNATED AS SHEARWALLS WALLS SHALL BE 8" THICK, TYPICAL U.N.O.
6. SEE COLUMN SCHEDULE SHEET S6.02 FOR COLUMN SIZES AND REINFORCING NOT NOTED ON PLAN. SEE DETAIL **16 / S6.02** FOR TYPICAL COLUMN DETAILS.
7. SEE **6 / S6.01** FOR STEPPED FOOTINGS.
8. TOP OF FOOTING SHALL BE 8" MINIMUM BELOW TOP OF FINISH FLOOR, TYPICAL U.N.O..
9. TOP OF FOOTING ELEVATION VARIES PER PLAN.
10. SEE **18 / S6.01** FOR UTILITY PENETRATION THROUGH FOUNDATION WALL.

Foundation Schedule - Basement (6,000 PSF Allowable Soil Bearing)

MARK	WIDTH	LENGTH	THICKNESS	REINFORCING	DETAILS
F1.5	1' - 6 "	CONT.	10"	(3)#5 CONTINUOUS W/ #4 @ 12" O.C. TRANSVERSE	
F8.0	8' - 0"	8' - 0"	14"	(9)#8 BOT EA WAY	
F8.25	8' - 3 "	CONT.	18"		
F10	10' - 0 "	CONT.	18"		
F10.0	10' - 0"	10' - 0"	26"	(11)#8 BOT EA WAY	
F11	11' - 0 "	CONT.	18"		
F12.0	12' - 0"	12' - 0"	34"	(14)#8 BOT EA WAY	
F12.16	12' - 0"	16' - 0"	26"	(13) #8 LONG BOT & - (17) #8 TRANS BOT	
F12A	12' - 0"	12' - 0"	22"	(14)#8 BOT EA WAY	
FA	12' - 0 "	20' - 0"	42"	#9 BARS @ 6" O.C. EW BOTTOM	
FB	10' - 0 "	18' - 0"	30"	#9 BARS @ 6" O.C. EW BOTTOM	
FELEV	12' - 0 "	24' - 0"	18"	(12)#9 LONG BOT - (24)#9 TRANS BOT	

Foundation Legend

- F2.0 — FOOTING TYPE RE: SCHEDULE THIS SHEET
- C1 — CONCRETE COLUMN TYPE RE: **16 / S6.02**
- SS / BP — STEEL COLUMN TYPE BASE PLATE TYPE RE:
- S — STEPPED FOOTING RE: **6 / S6.01**
- (E) EXISTING
- (N) NEW
- CSW1 — CONCRETE SHEARWALL RE: SCHEDULE **1 / S8.01**
- [325.33] TOP OF CONCRETE ELEVATION
- [325.33] BOTTOM OF FOOTING ELEVATION
- CMU WALL RE: SHEET

Note:
ALL SECTION CUTS ARE TYPICAL

CALL 48 HOURS BEFORE YOU DIG 1-800-424-555

Note:
SHORING NOT SHOWN RE: PERMIT NO. XXX TYPICAL AT EXTERIOR WALLS

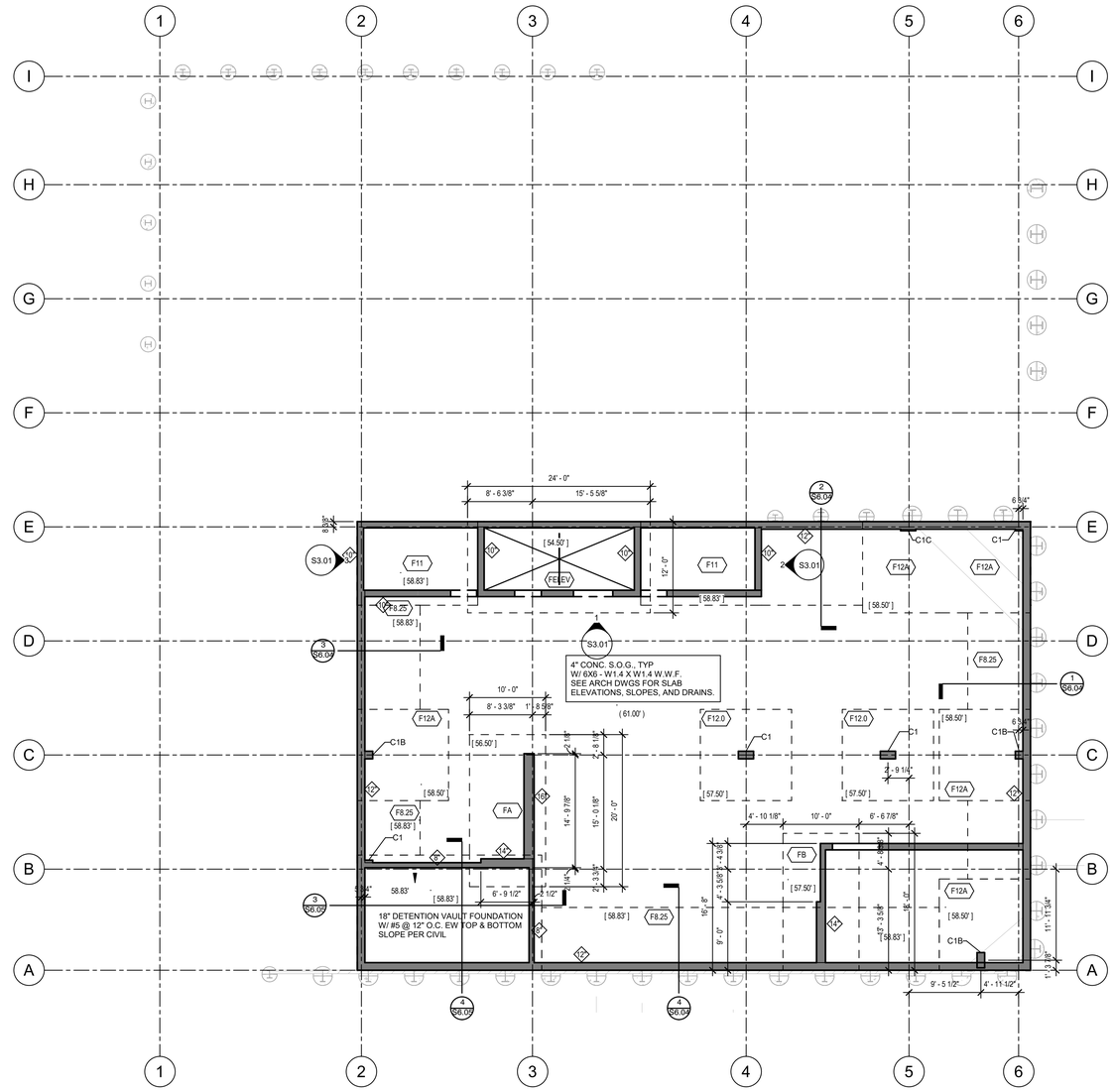

SCALE: 1/8" = 1'-0"

1 BASEMENT FOUNDATION PLAN

GRAPHIC SCALE

(1" : 8'-0")

CT ENGINEERING INC.
Structural Engineers
160 Nickerson Street Suite 302 Seattle, WA 98109
206.285.4512 (V) 206.285.0618 (F)
www.ctengineering.com

01.21.2021

No.	REVISION	DATE

JOB #: 20021
ENG: TSW
CAD: TSW
SCALE: As indicated
KEY ISSUE DATES:
PERMIT: 01.21.2021

FOR PERMIT

Foundation Plan - Basement

BLOSSOM APARTMENTS
214-220 5th Avenue S
Seattle, WA 98104

S2.01

C:\Users\TWarchs\revit\Documents\20021 - Blossom Apartments - v20_tsWarchs@ctengineering.com.rvt

12/7/2021 11:15:53 AM

Foundation Notes

1. ALL SOIL BEARING SURFACES SHALL BE SUBJECT TO INSPECTION AND APPROVAL BY THE GEOTECHNICAL ENGINEER PRIOR TO REINFORCING AND CONCRETE PLACEMENT.
2. CENTER INTERIOR FOOTINGS ON WALLS OR COLUMNS, TYPICAL U.N.O..
3. VERIFY ALL DIMENSIONS PRIOR TO CONSTRUCTION.
4. SEE ARCHITECTURAL SHEETS FOR WALL AND FLOOR DRAIN LOCATIONS.
5. ALL CONCRETE NOT DESIGNATED AS SHEARWALLS WALLS SHALL BE 8" THICK, TYPICAL U.N.O.
6. SEE COLUMN SCHEDULE SHEET S6.02 FOR COLUMN SIZES AND REINFORCING NOT NOTED ON PLAN. SEE DETAIL **16 / S6.02** FOR TYPICAL COLUMN DETAILS.
7. SEE **6 / S6.01** FOR STEPPED FOOTINGS.
8. TOP OF FOOTING SHALL BE 8" MINIMUM BELOW TOP OF FINISH FLOOR, TYPICAL U.N.O..
9. TOP OF FOOTING ELEVATION VARIES PER PLAN.
10. SEE **18 / S6.01** FOR UTILITY PENETRATION THROUGH FOUNDATION WALL.

Foundation Schedule - Basement (6,000 PSF Allowable Soil Bearing)

MARK	WIDTH	LENGTH	THICKNESS	REINFORCING	DETAILS
F1.5	1' - 6 "	CONT.	10"	(3)#5 CONTINUOUS W/ #4 @ 12" O.C. TRANSVERSE	
F8.0	8' - 0"	8' - 0"	14"	(9)#8 BOT EA WAY	
F8.25	8' - 3 "	CONT.	18"		
F10	10' - 0 "	CONT.	18"		
F10.0	10' - 0"	10' - 0"	26"	(11)#8 BOT EA WAY	
F11	11' - 0 "	CONT.	18"		
F12.0	12' - 0"	12' - 0"	34"	(14)#8 BOT EA WAY	
F12.16	12' - 0"	16' - 0"	26"	(13) #8 LONG BOT & - (17) #8 TRANS BOT.	
F12A	12' - 0"	12' - 0"	22"	(14)#8 BOT EA WAY	
FA	10' - 0 "	20' - 0"	42"	#9 BARS @ 6" O.C. EW BOTTOM	
FB	10' - 0 "	18' - 0"	30"	#9 BARS @ 6" O.C. EW BOTTOM	
FELEV	12' - 0 "	24' - 0"	18"	(12)#9 LONG BOT - (24)#9 TRANS BOT	

Concrete Beam Schedule

MARK	WIDTH X DEPTH (INCHES)	REINFORCEMENT	DETAILS
CB-1	10 x 14	(3)#8 CONT. BOTTOM, (3)#5 CONT. TOP - #4 STIRRUPS AT 12" O.C.	
CB-2	10 x 32	(3)#8 CONT. BOTTOM, (3)#5 CONT. TOP - #4 STIRRUPS AT 12" O.C.	
CB-3	8 x 74	(2)#8 CONT. BOTTOM, (2)#5 TOP - #5 VERT EA FACE (SEE DETAILS)	
CB-4	10 x 74	(2)#8 CONT. BOTTOM, (2)#5 TOP - #5 VERT EA FACE (SEE DETAILS)	
CB-5	10 x 20	(4)#8 CONT. BOTTOM, (4)#5 CONT. TOP - #4 STIRRUPS AT 12" O.C.	

Foundation Legend

- F2.0 — FOOTING TYPE RE: SCHEDULE THIS SHEET
- C1 — CONCRETE COLUMN TYPE RE: **16 / S6.02**
- HSS BP — STEEL COLUMN TYPE BASE PLATE TYPE RE:
- S — STEPPED FOOTING RE: **6 / S6.01**
- (E) EXISTING
- (N) NEW
- CSW1 — CONCRETE SHEARWALL RE: SCHEDULE **1 / S8.01**
- [325.33'] TOP OF CONCRETE ELEVATION
- [325.33'] BOTTOM OF FOOTING ELEVATION
- CMU WALL RE: SHEET

Note:
ALL SECTION CUTS ARE TYPICAL

CALL 48 HOURS BEFORE YOU DIG 1-800-424-555

Note:
SHORING NOT SHOWN
RE: PERMIT NO. XXX
TYPICAL AT EXTERIOR WALLS

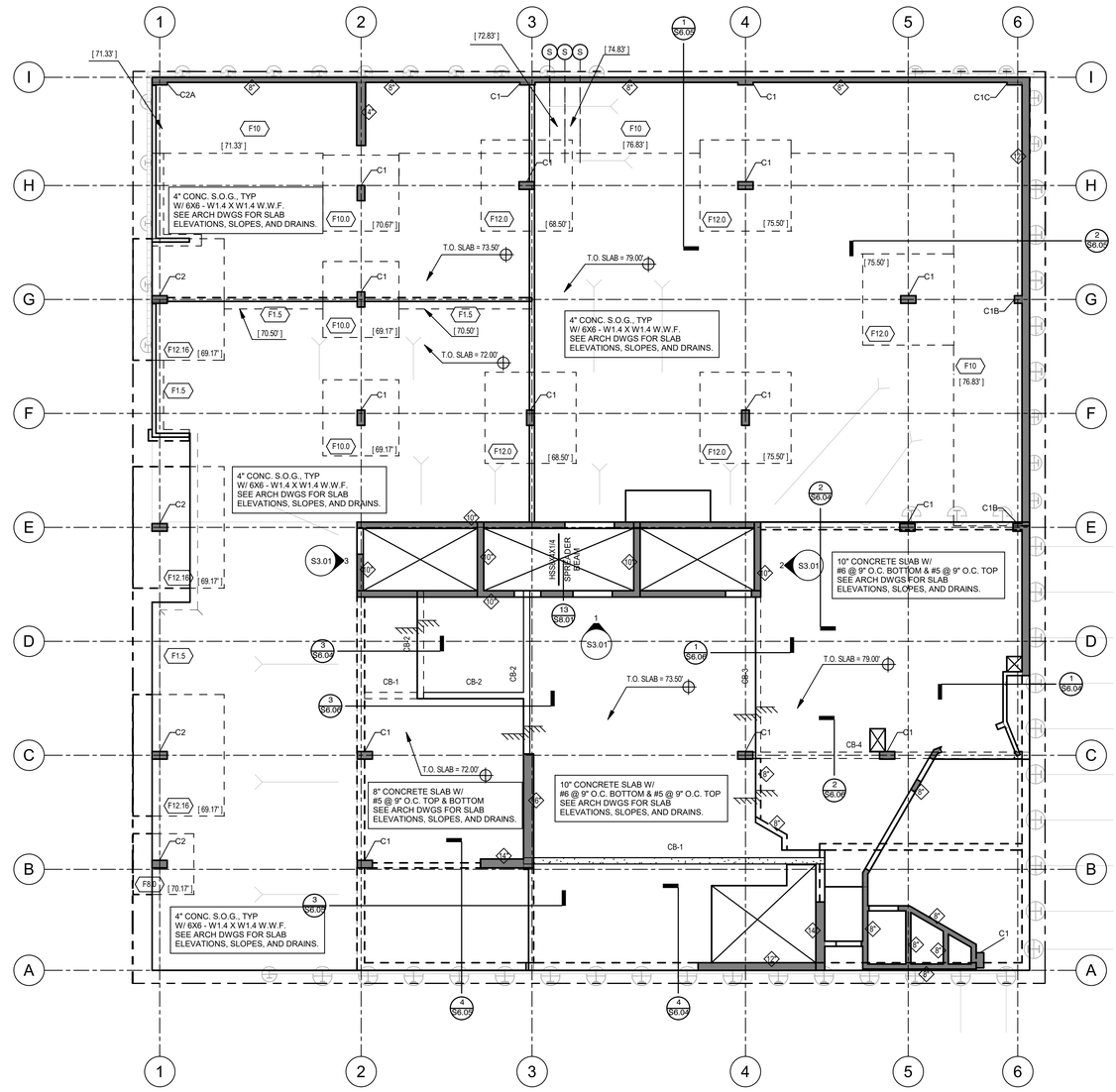

SCALE: 1/8" = 1'-0"

1 LEVEL 1 RETAIL FOUNDATION & SLAB PLAN

GRAPHIC SCALE

-8' 0' 4' 8' 16'

(1" : 8'-0")

CT ENGINEERING INC.
Structural Engineers
160 Nickerson Street Suite 302 Seattle, WA 98109
206.282.4512 (V) 206.285.0618 (F)
www.ctengineering.com

01.21.2021

No.	REVISION	DATE

JOB #: 20021
ENG: TSW
CAD: TSW
SCALE: As indicated
KEY ISSUE DATES:
PERMIT: 01.21.2021

FOR PERMIT

Foundation Plan - Level 1

BLOSSOM APARTMENTS
214-220 5th Avenue S
Seattle, WA 98104

S2.02

C:\Users\TWendorf\Desktop\Documents\20021 - Blossom Apartments - v20_tsilvey@ctengineering.com.rvt
12/1/2021 11:15:57 AM

Post Tension Slab Notes

1. ALL CONCRETE FOR POST TENSIONED SLABS SHALL BE f'c = 3,750 PSI PRIOR TO STRESSING AND 5000 PSI AT 28 DAYS. RE: STRUCTURAL NOTES 03384 FOR ADDITIONAL INFORMATION.
2. TENDON ELEVATIONS INDICATED ARE MEASURED FROM BOTTOM OF SLAB AND BOTTOM OF DROPPED SOFFIT TO C.G.S. OF 1/2" DIAMETER TENDON.
3. STRESS TENDONS ACCORDING TO STRUCTURAL NOTES SECTION 03384 ON SHEET S1.00 - DISTRIBUTED FIRST.
4. REBAR PARALLEL TO BANDED TENDONS SHALL BE TOP BARS AT UPPER MAT. REBAR PERPENDICULAR TO BANDED TENDONS SHALL BE TOP BARS AT LOWER MAT.
5. DASHED LINES INDICATE WALLS BELOW THIS LEVEL, SOLID LINES INDICATE WALLS AT THIS LEVEL.
6. SLAB OPENINGS, RE: DETAILS S-11/S7.01
7. RE: SHEET S7.01 FOR CURVED TENDON CONDITIONS.
8. RE: 12/S7.02 FOR PENETRATIONS AT COLUMNS.RE: 9/S7.01 FOR OPENINGS AT TENDON ANCHORAGE.
9. CONTRACTOR SHALL SUBMIT TO THE ENGINEER ACCURATE PLANS ILLUSTRATING LOCATION AND SIZE OF ALL ITEMS TO BE EMBEDDED IN SLAB INCLUDING ELECTRICAL CONDUIT, PLUMBING, DRAINS, ETC.
10. CONTRACTOR SHALL NOTIFY THE ENGINEER OF ANY PROPOSED SLAB PENETRATIONS OR OPENINGS NOT SHOWN OF THESE DRAWINGS PRIOR TO CONSTRUCTION.
11. PROVIDE MINIMUM OF (2) DISTRIBUTED TENDONS OVER CONCRETE COLUMNS.

Post Tension Slab Legend

T. = TOP
B. = BOTTOM
MD = MID DEPTH

STRESSING END RE: **2 / S7.01**, **4 / S7.01**

ANCHOR END RE: **1 / S7.01**, **3 / S7.01**

ADDED TENDON ANCHOR RE: **10 / S7.01**

STEP IN TOP OF SLAB RE: **10 / S7.02**

STEP IN SOFFIT RE: **20 / S7.02**

C1 — CONCRETE COLUMN TYPE RE:

HSS BP — STEEL COLUMN TYPE BASE PLATE TYPE RE:

HD — HOLDOWN RE: SCHEDULE

SRA1 — STUD RAIL RE: SCHEDULE THIS SHEET

Note:
ALL SECTION CUTS ARE TYPICAL

Level 2 Stud Rail Schedule

TYPE	NO. OF RAILS	So	SPA	STUDS	LENGTH	PENETRATION
SR8-A1	10	2 1/4"	2 3/4"	16	3' - 7 1/2"	1-4"
SR8-B1	7	2 1/4"	2 3/4"	10	2' - 3"	1-4"
SR8-D1	5	2 1/4"	2 3/4"	6	1' - 4"	1-4"

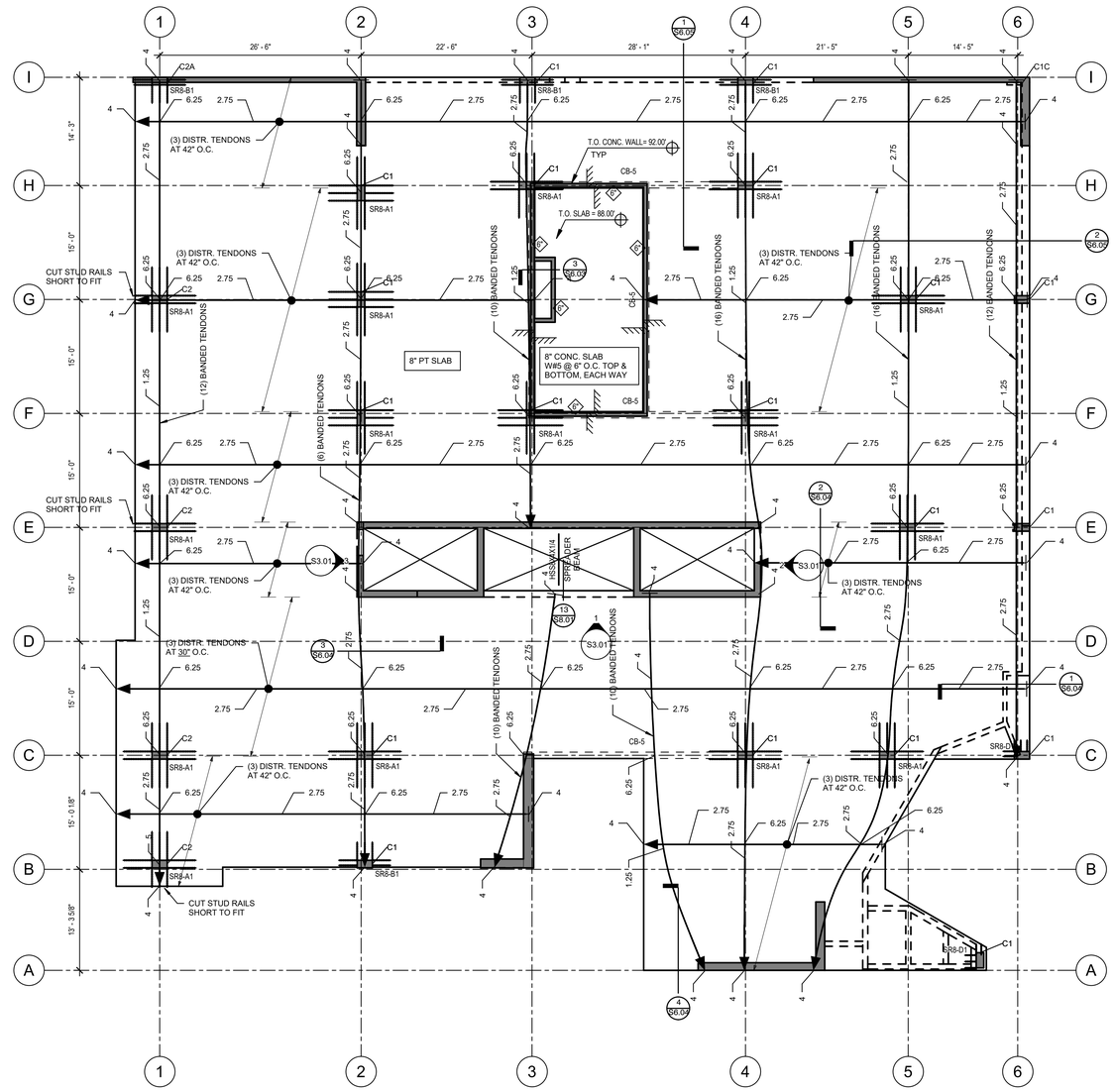

SCALE: 1/8" = 1'-0"

1 LEVEL 2 PT PLAN

Concrete Beam Schedule

MARK	WIDTH X DEPTH (INCHES)	REINFORCEMENT	DETAILS
CB-1	10 x 14	(3)#8 CONT. BOTTOM, (3)#5 CONT. TOP - #4 STIRRUPS AT 12" O.C.	
CB-2	10 x 32	(3)#8 CONT. BOTTOM, (3)#5 CONT. TOP - #4 STIRRUPS AT 12" O.C.	
CB-3	8 x 74	(2)#8 CONT. BOTTOM, (2)#5 TOP - #5 VERT EA FACE (SEE DETAILS)	
CB-4	10 x 74	(2)#8 CONT. BOTTOM, (2)#5 TOP - #5 VERT EA FACE (SEE DETAILS)	
CB-5	10 x 20	(4)#8 CONT. BOTTOM, (4)#5 CONT. TOP - #4 STIRRUPS AT 12" O.C.	

GRAPHIC SCALE

-8' 0' 4' 8' 16'

(1" : 8'-0")

CT ENGINEERING INC.
Structural Engineers
180 Nickerson Street, Suite 302 Seattle, WA 98109
206.285.4512 (V) 206.285.0618 (F)
www.ctengineering.com

01.21.2021

No.	REVISION	DATE

JOB #: 20021
ENG: TSW
CAD: TSW
SCALE: As indicated
KEY ISSUE DATES:
PERMIT: 01.21.2021

FOR PERMIT

Level 2 PT Plan

BLOSSOM APARTMENTS
214-220 5th Avenue S
Seattle, WA 98104

S2.03

C:\Users\TSWendschneider\Documents\20021 - Blossom Apartments - v20_tswendschneider@ctengineering.com.rvt
12/1/2021 11:16:01 AM

Reinforcing Keynotes

- (R1) #5 AT 48" O.C. BOTTOM EACH WAY
- (R2) COLUMN REINFORCING (15) #5 X 15'-0" TOP EACH WAY, HOOK AT SLAB EDGE TYPICAL U.N.O.
  COLUMN REINFORCING (10) #5 X 10'-0" BOTTOM EACH WAY, HOOK AT SLAB EDGE TYPICAL U.N.O.
- (R3) #5 AT 15" O.C. TOP (6'-0" / 4'-0") TYPICAL AT ALL CONCRETE WALLS (2) #5 AT 15" O.C. AT INTERIOR WALLS
- (R4) #5 X 15'-0" AT 12" O.C. TOP & BOTTOM TYPICAL AT INTERIOR CONCRETE WALLS
- (R5) TYPICAL CORNER REINFORCING RE: 16/S7.02
- (R6) TYPICAL OPENING REINFROCING RE: 6/S7.02
- (R7) #5 X 16'-0" BOTTOM
- (R8) #5 X 6'-0" TOP
- (R9) #5 X 30'-0" TOP
- (R10) #5 X 12'-0" TOP
- (R11) #5 X 22'-0" TOP
- (R12) #5 X 6'-0" TOP
- (R13) #5 X 15'-0" TOP AND BOTTOM
- (R14) #5 X 30'-0" TOP AND BOTTOM

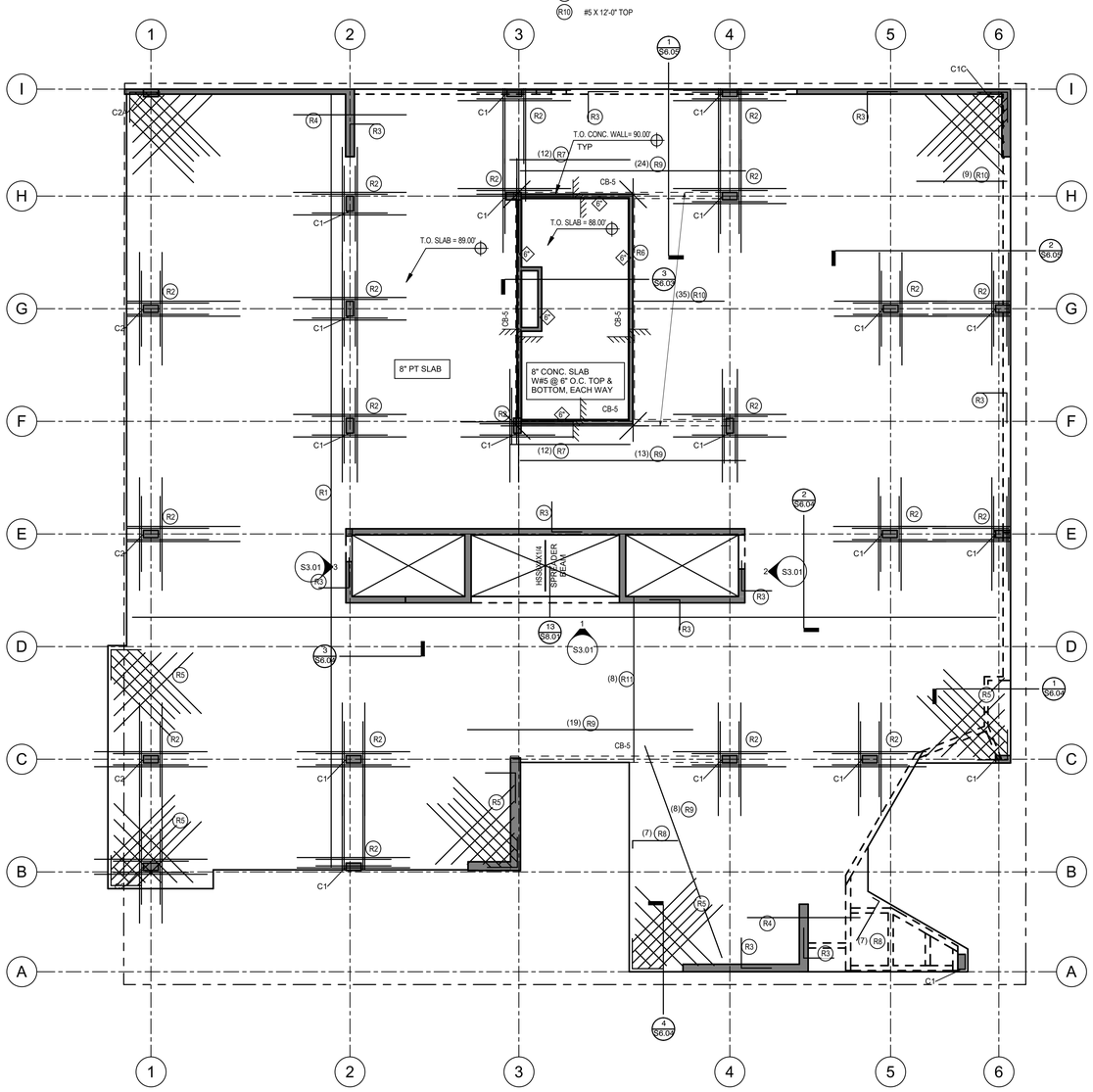

SCALE: 1/8" = 1'-0"

1 LEVEL 2 REINFORCEMENT PLAN

Concrete Beam Schedule

MARK	WIDTH X DEPTH (INCHES)	REINFORCEMENT	DETAILS
CB-1	10 x 14	(3)#8 CONT. BOTTOM, (3)#5 CONT. TOP - #4 STIRRUPS AT 12" O.C.	
CB-2	10 x 32	(3)#8 CONT. BOTTOM, (3)#5 CONT. TOP - #4 STIRRUPS AT 12" O.C.	
CB-3	8 x 74	(2)#8 CONT. BOTTOM, (2)#5 TOP - #5 VERT EA FACE (SEE DETAILS)	
CB-4	10 x 74	(2)#8 CONT. BOTTOM, (2)#5 TOP - #5 VERT EA FACE (SEE DETAILS)	
CB-5	10 x 20	(4)#8 CONT. BOTTOM, (4)#5 CONT. TOP - #4 STIRRUPS AT 12" O.C.	

GRAPHIC SCALE

-8' 0' 4' 8' 16'

(1" : 8'-0")

CT ENGINEERING INC.
Structural Engineers
160 Nickerson Street Suite 302 Seattle, WA 98109
206.282.4512 (V) 206.285.0618 (F)
www.ctengineering.com

01.21.2021

No.	REVISION	DATE

JOB #: 20021
ENG: TSW
CAD: TSW
SCALE: As indicated
KEY ISSUE DATES:
PERMIT: 01.21.2021

FOR PERMIT

Level 2 Reinforcing Plan

BLOSSOM APARTMENTS
214-220 5th Avenue S
Seattle, WA 98104

S2.04

C:\Users\TSWendt\Desktop\Documents\20021 - Blossom Apartments - v20_tsWendt@ctengineering.com.rvt
12/1/2021 11:16:04 AM

Post Tension Slab Notes

1. ALL CONCRETE FOR POST TENSIONED SLABS SHALL BE f'c = 3,750 PSI PRIOR TO STRESSING AND 5000 PSI AT 28 DAYS. RE: STRUCTURAL NOTES 03384 FOR ADDITIONAL INFORMATION.
2. TENDON ELEVATIONS INDICATED ARE MEASURED FROM BOTTOM OF SLAB AND BOTTOM OF DROPPED SOFFIT TO C.G.S. OF 1/2" DIAMETER TENDON.
3. STRESS TENDONS ACCORDING TO STRUCTURAL NOTES SECTION 03384 ON SHEET S1.00 - DISTRIBUTED FIRST.
4. REBAR PARALLEL TO BANDED TENDONS SHALL BE TOP BARS AT UPPER MAT. REBAR PERPENDICULAR TO BANDED TENDONS SHALL BE TOP BARS AT LOWER MAT.
5. DASHED LINES INDICATE WALLS BELOW THIS LEVEL, SOLID LINES INDICATE WALLS AT THIS LEVEL.
6. SLAB OPENINGS, RE: DETAILS 5-11/S7.01
7. RE: SHEET S7.01 FOR CURVED TENDON CONDITIONS.
8. RE: 12/S7.02 FOR PENETRATIONS AT COLUMNS.RE: 9/S7.01 FOR OPENINGS AT TENDON ANCHORAGE.
9. CONTRACTOR SHALL SUBMIT TO THE ENGINEER ACCURATE PLANS ILLUSTRATING LOCATION AND SIZE OF ALL ITEMS TO BE EMBEDDED IN SLAB INCLUDING ELECTRICAL CONDUIT, PLUMBING, DRAINS, ETC.
10. CONTRACTOR SHALL NOTIFY THE ENGINEER OF ANY PROPOSED SLAB PENETRATIONS OR OPENINGS NOT SHOWN OF THESE DRAWINGS PRIOR TO CONSTRUCTION.
11. PROVIDE MINIMUM OF (2) DISTRIBUTED TENDONS OVER CONCRETE COLUMNS.

Post Tension Slab Legend

T. = TOP
B. = BOTTOM
MD = MID DEPTH

STRESSING END
RE: **2 / S7.01**
4 / S7.01

ANCHOR END
RE: **1 / S7.01**
3 / S7.01

ADDED TENDON ANCHOR
RE: **18 / S7.01**

STEP IN TOP OF SLAB
RE: **10 / S7.02**

STEP IN SOFFIT
RE: **20 / S7.02**

C1 — CONCRETE COLUMN TYPE
RE:

SBP — STEEL COLUMN TYPE
BASE PLATE TYPE
RE:

HD — HOLDOWN
RE: SCHEDULE

SRA1 — STUD RAIL
RE: SCHEDULE THIS SHEET

Note:
ALL SECTION CUTS ARE TYPICAL

Level 3 Stud Rail Schedule

TYPE	NO. OF RAILS	So	SPA	STUDS	LENGTH	PENETRATION
SR-A1	10	4 1/4"	4 1/4"	14	4' - 11 1/2"	1-4"
SR-B1	7	4 1/4"	4 1/4"	15	5' - 3 3/4"	1-4"
SR-C1	10	4 1/4"	4 1/4"	15	5' - 3 3/4"	1-4"
SR-D1	12	4 1/4"	4 1/4"	15	5' - 3 3/4"	1-4"
SR-F1	16	4 1/4"	4 1/4"	28	9' - 11"	1-4"

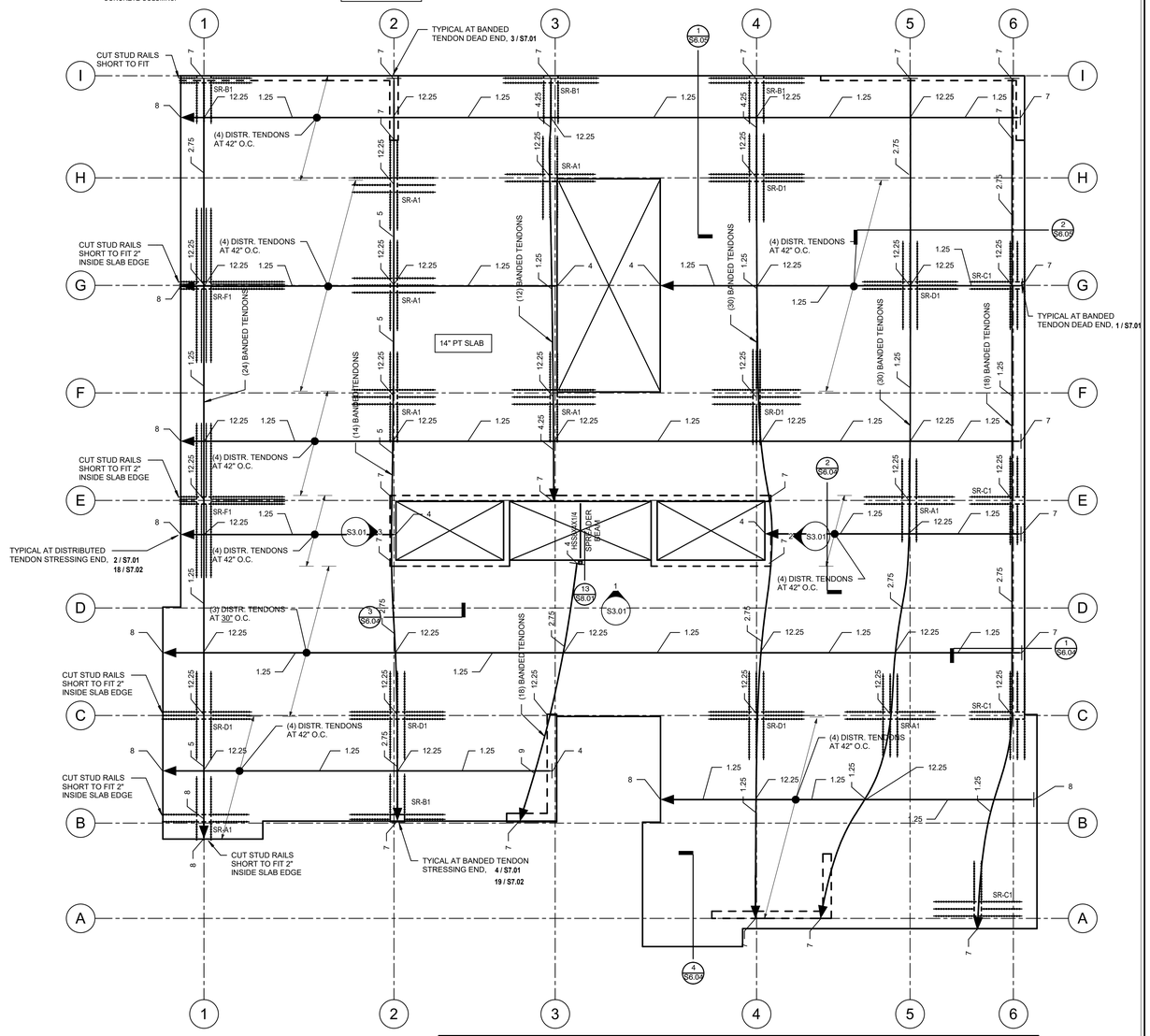

SCALE: 1/8" = 1'-0"

1 LEVEL 3 PT PLAN

Concrete Beam Schedule

MARK	WIDTH X DEPTH (INCHES)	REINFORCEMENT	DETAILS
CB-1	10 x 14	(3)#8 CONT. BOTTOM, (3)#5 CONT. TOP - #4 STIRRUPS AT 12" O.C.	
CB-2	10 x 32	(3)#8 CONT. BOTTOM, (3)#5 CONT. TOP - #4 STIRRUPS AT 12" O.C.	
CB-3	8 x 74	(2)#8 CONT. BOTTOM, (2)#5 TOP - #5 VERT EA FACE (SEE DETAILS)	
CB-4	10 x 74	(2)#8 CONT. BOTTOM, (2)#5 TOP - #5 VERT EA FACE (SEE DETAILS)	
CB-5	10 x 20	(4)#8 CONT. BOTTOM, (4)#5 CONT. TOP - #4 STIRRUPS AT 12" O.C.	

GRAPHIC SCALE

(1" : 8'-0")

CT ENGINEERING INC.
Structural Engineers
180 Nickerson Street, Suite 302 Seattle, WA 98109
206.282.4512 (V) 206.285.0618 (F)
www.ctengineering.com

01.21.2021

No.	REVISION	DATE

JOB #: 20021
ENG: TSW
CAD: TSW
SCALE: As indicated
KEY ISSUE DATES:
PERMIT: 01.21.2021

FOR PERMIT

Level 3 PT Plan

BLOSSOM APARTMENTS
214-220 5th Avenue S
Seattle, WA 98104

S2.05

C:\Users\TSW\AppData\Local\Temp\AcPublish_1164\Blossom Apartments - v20_tsw@ctengineering.com.rvt
1/21/2021 11:16:09 AM

Reinforcing Keynotes

- R1 #5 AT 48" O.C. BOTTOM EACH WAY
- R2 COLUMN REINFORCING (15) #5 X 15'-0" TOP EACH WAY, HOOK AT SLAB EDGE TYPICAL U.N.O.
  COLUMN REINFORCING (10) #5 X 10'-0" BOTTOM EACH WAY, HOOK AT SLAB EDGE TYPICAL U.N.O.
- R3 #5 AT 15" O.C. TOP TYPICAL AT ALL CONCRETE WALLS (2) #5 AT 15" O.C. AT INTERIOR WALLS (6'-0", 4'-0")
- R4 #5 X 15'-0" AT 12" O.C. TOP & BOTTOM TYPICAL AT INTERIOR CONCRETE WALLS
- R5 TYPICAL CORNER REINFORCING RE: 16/S7.02
- R6 TYPICAL OPENING REINFROCING RE: 6/S7.02
- R7 #5 X 16'-0" BOTTOM
- R8 #5 X 6'-0" TOP
- R9 #5 X 30'-0" TOP
- R10 #5 X 12'-0" TOP
- R11 #5 X 22'-0" TOP
- R12 #5 X 6'-0" TOP
- R13 #5 X 15'-0" TOP AND BOTTOM
- R14 #5 X 30'-0" TOP AND BOTTOM

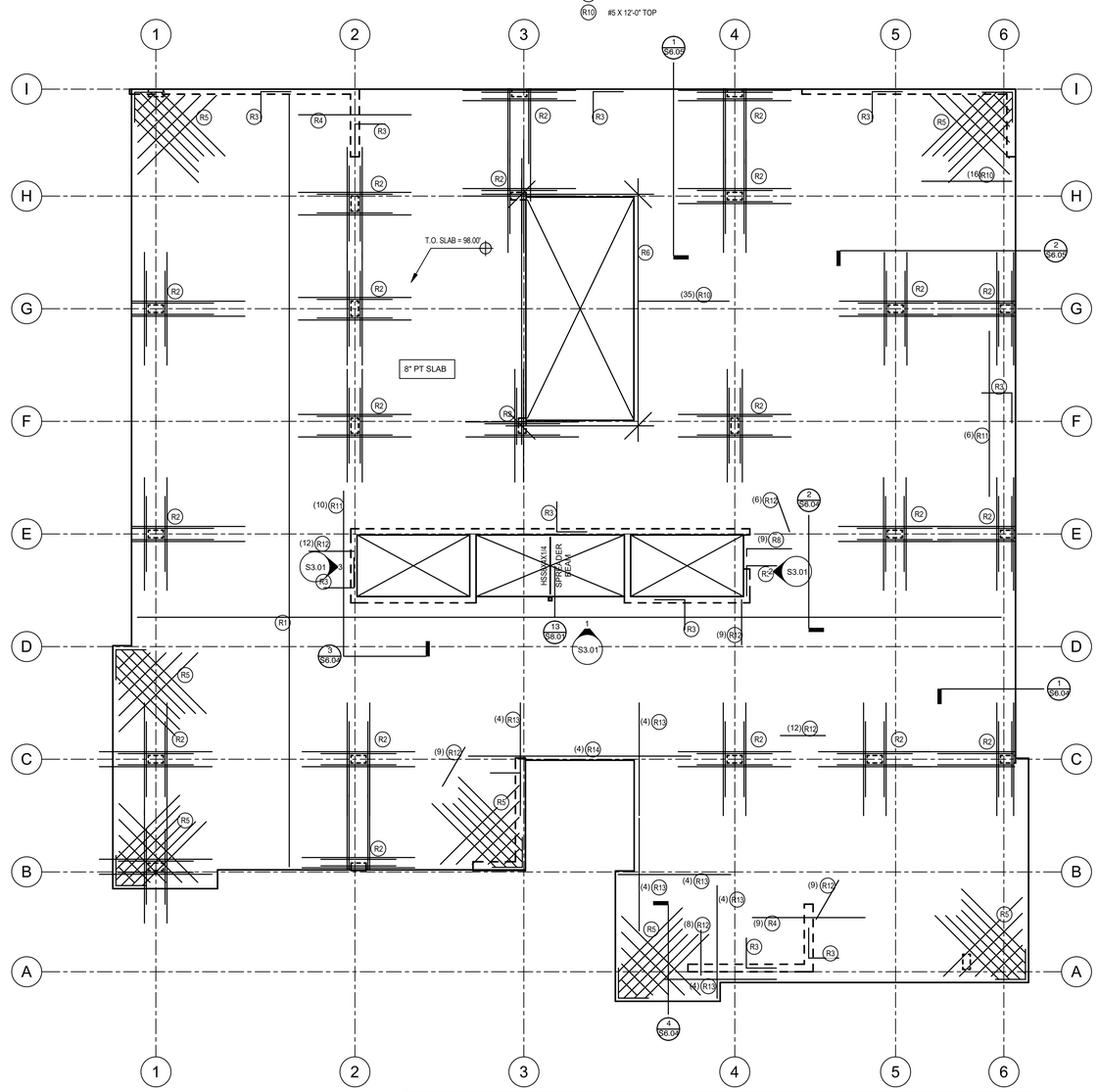

SCALE: 1/8" = 1'-0"

1 LEVEL 3 REINFORCEMENT PLAN

Concrete Beam Schedule

MARK	WIDTH X DEPTH (INCHES)	REINFORCEMENT	DETAILS
CB-1	10 x 14	(3)#8 CONT. BOTTOM, (3)#5 CONT. TOP - #4 STIRRUPS AT 12" O.C.	
CB-2	10 x 32	(3)#8 CONT. BOTTOM, (3)#5 CONT. TOP - #4 STIRRUPS AT 12" O.C.	
CB-3	8 x 74	(2)#8 CONT. BOTTOM, (2)#5 TOP - #5 VERT EA FACE (SEE DETAILS)	
CB-4	10 x 74	(2)#8 CONT. BOTTOM, (2)#5 TOP - #5 VERT EA FACE (SEE DETAILS)	
CB-5	10 x 20	(4)#8 CONT. BOTTOM, (4)#5 CONT. TOP - #4 STIRRUPS AT 12" O.C.	

GRAPHIC SCALE

-8' 0' 4' 8' 16'

(1" : 8'-0")

CT ENGINEERING INC.
Structural Engineers
160 Nickerson Street Suite 302 Seattle, WA 98109
206.285.4512 (V) 206.285.0618 (F)
www.ctengineering.com

01.21.2021

No.	REVISION	DATE

JOB #: 20021
ENG: TSW
CAD: TSW
SCALE: As indicated

KEY ISSUE DATES:

PERMIT: 01.21.2021

FOR PERMIT

Level 3 Reinforcing Plan

BLOSSOM APARTMENTS
214-220 5th Avenue S
Seattle, WA 98104

S2.06

C:\Users\TSWendorf\AppData\Local\Temp\AcPublish_20020\20021 - Blossom Apartments - v20_tswendorf@ctengineering.com.rvt
12/1/2021 11:16:12 AM

Shearwall Assemblies

SEE SHEARWALL SCHEDULE SHEET S1.20
RE: PLAN FOR INDIVIDUAL CALL-OUTS AT EACH LEVEL

LEVEL	SWA	SWB
L8 TO ROOF	P3	P6
L7 TO L8	P3	P3
L6 TO L7	P2	P2
L5 TO L6	P2	P2
L4 TO L5	2P4	2P4
L3 TO L4	2P4	2P4

Shearwall and Holdown Notes

1. EXTEND LEVEL 6 SHEARWALLS TO UNDERSIDE OF ROOF STRUCTURE. RE: THE UPPER ROOF PLAN FOR SHEARWALLS AND SIMPSON HOLDOWNS AT PENTHOUSE WALLS.
2. THE SHEARWALL AND HOLDOWNS INDICATED REPRESENT THOSE WALLS WHICH "STACK". ADDITIONAL NON-STACKING WALLS OR HOLDOWNS ARE INDICATED ON THE FRAMING PLANS.
3. ALL FASTENERS IN CONTACT WITH TREATED WOOD (PT OR FRTW) SHALL BE CORROSION RESISTANT (GALVANIZED OR STAINLESS) RE: STRUCTURAL NOTES SECTION 06100.
4. SECURE SILL PLATES TO CONCRETE WITH 5/8" DIA. X 7" EMBED AT 48" O.C. MAXIMUM., UNLESS NOTED OTHERWISE. RE: SHEARWALL AND HOLDOWN SCHEDULE SHEET S1.20 FOR ADDITIONAL ANCHOR BOLT REQUIREMENTS.

Note:
ALL SECTION CUTS ARE TYPICAL

Shearwall and Holdown Legend

SHEARWALL ASSEMBLY
SEE SCHEDULE THIS SHEET (INDIVIDUAL SW CALL-OUTS MAY APPLY FOR THAT FLOOR ONLY)

SW1

5B — HOLDOWN AND TRIM REINFORCING RE: HOLDOWN SCHEDULE 19/S1.30 & S1.31.

* — INDICATES HOLDOWN SHARED BY TWO WALLS. RE: XX/XX

HSS BP-1 — STEEL COLUMN / BASE PLATE

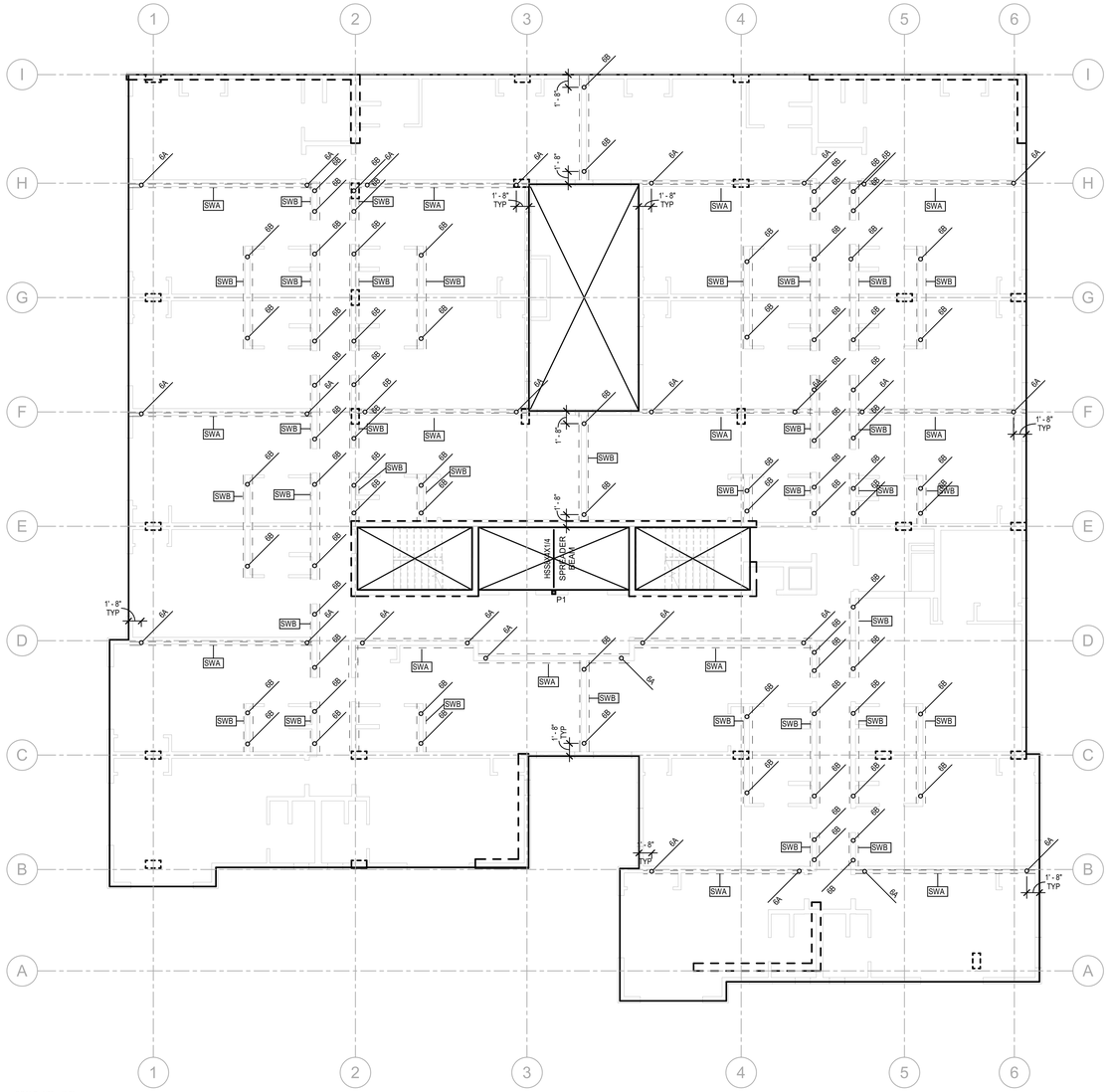

SCALE: 1/8" = 1'-0"

1 SHEAR WALL AND HOLDOWN PLAN

GRAPHIC SCALE

-8' 0' 4' 8' 16'

(1" : 8'-0")

CT ENGINEERING INC.
Structural Engineers
180 Nickerson Street Suite 302 Seattle, WA 98109
206.285.4512 (V) 206.285.0618 (F)
www.ctengineering.com

01.21.2021

No.	REVISION	DATE

JOB #: 20021
ENG: TSW
CAD: TSW
SCALE: As indicated
KEY ISSUE DATES:
PERMIT: 01.21.2021

FOR PERMIT

Shearwall and Holdown Plan

BLOSSOM APARTMENTS
214-220 5th Avenue S
Seattle, WA 98104

S2.07

C:\Users\TWandschneider\Documents\20021 - Blossom Apartments - v20_tylerw@ctengineering.com.rvt

1/21/2021 11:16:14 AM

Bearing Wall Stud Schedule

WALL TYPE	LEVEL ABOVE PT DECK	PLATE SIZE	RIM / BLOCKING	STUD SIZE AND SPACING
EXTERIOR 2X6	PENTHOUSE L4-ROOF L3	2 X 6 2 X 6 2 X 6		2 X 6 AT 16" O.C. 2 X 6 AT 16" O.C. (2)2 X 6 AT 16" O.C.
PARTY WALL (STAGGERED)	PENTHOUSE ROOF L5-L8 L3-L4	2 X 8 2 X 8 2 X 8 2 X 8		2 X 4 AT 16" O.C. EACH SIDE 2 X 4 AT 16" O.C. EACH SIDE 2 X 4 AT 16" O.C. EACH SIDE (2) 2 X 4 AT 16" O.C. EACH SIDE
CORRIDOR WALL	PENTHOUSE L4-ROOF L3	2 X 6 2 X 6 2 X 6		2 X 6 AT 16" O.C. 2 X 6 AT 16" O.C. (2)2 X 6 AT 16" O.C.
STAIR WALL FIRE WALL ELEVATOR WALL	PENTHOUSE ROOF L4-ROOF L3	2 X 6 2 X 6 2 X 6 2 X 6		2 X 6 AT 16" O.C. 2 X 4 AT 16" O.C. 2 X 6 AT 16" O.C. (2)2 X 6 AT 16" O.C.
INTERIOR 2X4	PENTHOUSE ROOF L5-L8 L3-L4	2 X 4 2 X 4 2 X 4 2 X 4		2 X 4 AT 16" O.C. 2 X 4 AT 16" O.C. 2 X 4 AT 16" O.C. (2) 2 X 4 AT 16" O.C.

BEARING WALL NOTES
1. SEE SHEARWALL PLAN SHEET S2.04 AND SHEARWALL SCHEDULE SHEET S1.20 FOR WALL SHEATHING, ADDITIONAL PLATE AND STUD REQUIREMENTS, BLOCKING AND PLATE NAILING. SEE SAWN LUMBER STRUCTURAL NOTES SHEET S1.02 FOR SPECIES AND GRADE OF WALL PLATES AND STUD
2. SECURE SILL PLATES TO CONCRETE WITH 5/8" DIA. X 10" LONG ANCHOR BOLTS WITH 7" EMBED. AT 48" ON CENTER TYPICAL UNLESS NOTED OTHERWISE. REFER TO SHEET S2.04 AND SHEARWALL AND HOLDOWN SCHEDULE SHEET S1.20 AND S1.30 FOR ADDITIONAL ANCHOR BOLT REQUIREMENTS. WHERE FRTW OR PRESERVATIVE TREATED WOOD IS USED, REFER TO THAT NOTE SECTION FOR CORROSION PROTECTION REQUIREMENTS FOR CONNECTORS.
3. SEE DETAIL 2/S9.10 FOR TOP PLATE SPLICE. PROVIDE ADDITIONAL CONNECTORS AT SHEARWALLS AS INDICATED ON THE PLANS.
4. PROVIDE (1) ADDITIONAL STUD X SPACING PER BEARING WALL SCHEDULE. TYPICAL AT ALL WALL DIRECTLY BELOW THE ROOF DECK. TYPICAL PT SLAB TO ROOF.

Floor Joist Schedule

		CLEAR SPAN	D	L	PART.	PRO	11 7/8" JOIST
RESIDENTIAL	J1	UP TO 14'-0"	25	40	10	50	TJI 210 AT 16" O.C.
	J2	14'-1" TO 16'-6"	25	40	10	50	TJI 230 AT 16" O.C.
COMMON AREAS							

W_{DL}: RE: SCHEDULE
W_{LL}: RE: SCHEDULE

JOIST MANUFACTURER SHALL PROVIDE LAYOUT DRAWING FOR APPROVAL. "PRO" INDICATES DESIRED TJI-PRO RATING SYSTEM VALUE, AND SUBSTITUTIONS SHALL FURNISH EVIDENCE OF EQUIVALENT FLOOR STIFFNESS THAT MY BE GREATER THAN THAT REQUIRED BY CODE.

NOTE:
RE: ARCHITECTURAL REFLECTED CEILING PLANS FOR DROPPED CEILINGS WHICH REQUIRE DEEPER TJI JOISTS OF SAME SERIES.

Wood Beam Schedule

MARK	SIZE	POST TYPE
XX-1	4 X 8 DF#2	A
XX-2	5 1/2 X 7 1/2 GLB	B
XX-3	5 1/4 X 5 1/4 PSL	C
XX-4	1 1/2 X 9 1/2 LSL	B
XX-5	(2) 1 3/4 X 9 1/2 LSL	B

Wood Beam Schedule

MARK	SIZE	POST TYPE
XX-6	(2) 1 3/4 X 11 7/8 LSL	B
XX-7	3 1/2 X 9 1/2 PSL	C
XX-8	5 1/4 X 9 1/2 PSL	D
XX-9	7 X 9 1/2 PSL	D

Wood Post Schedule

LEVEL ABOVE PT DECK	TYPE A		TYPE B		TYPE C		TYPE D		TYPE E	TYPE F	TYPE G	TYPE H
	2X4 PL.	2X6 PL.	2X4 PL.	2X6 PL.	2X4 PL.	2X6 PL.	2X4 PL.	2X6 PL.	2X6 PL.	2X6 PL.	2X6 PL.	2X4 PL.
6	(2)2X4	(2)2X6	(2)2X4	(2)2X6	(2)2X4	(2)2X6	(2)2X4	(2)2X6		4X6	4X6	-
5	(2)2X4	(2)2X6	(2)2X4	(2)2X6	(2)2X4	(2)2X6	(2)2X4	(2)2X6		4X6	4X6	-
4	(3)2X4	(2)2X6	(3)2X4	(2)2X6	(4)2X4	(3)2X6	(4)2X4	(4)2X6		4X6	4X6	-
3	(3)2X4	(3)2X6	(3)2X4	(3)2X6	(4)2X4	(3)2X6	4X6	(4)2X6	(3)2X6	6X6	6X6	(4)2X4
2	(4)2X4	(3)2X6	(5)2X4	(4)2X6	(5)2X4	(4)2X6	4X8	6X8	(4)2X6	6X6	6X6	(6)2X4
1	(5)2X4	(4)2X6	(6)2X4	(5)2X6	4X8	(5)2X6	4X8	6X8	(4)2X6	6X8	8X6	3" PIPE

WOOD POST SCHEDULE NOTES
1. STUDS, PLATES AND GENERAL FRAMING SHALL BE DOUG FIR.
2. 4X AND 6X POSTS SHALL BE DOUG FIR NO. 2 WITH DOUG FIR PLATES.
3. RE: FOR TYPICAL BUNDLED STUD AND BLOCKING DETAILS
4. POSTS NOT CALLED OUT SHALL CONFORM TO TYPE A MINIMUM.
5. WOOD POST SCHEDULE IS TYPICAL, U.N.O. ON PLANS.

Framing Legend

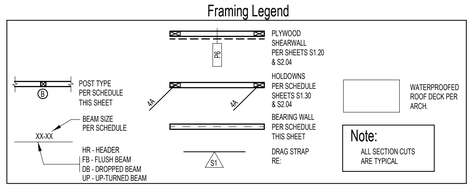

Note:
ALL SECTION CUTS ARE TYPICAL

Floor Framing Notes

1. FLOOR FRAMING - 11 7/8" DEEP TJI. RE: FLOOR JOIST SCHEDULE, TYPICAL UNLESS NOTED OTHERWISE. RE: 6/S9.10 FOR JOIST HANGERS AT FLUSH FRAMING CONDITIONS. SECURE JOIST TO TOP PLATES WITH (2) 8d NAILS. JOISTS UNDER AND PARALLEL TO BEARING AND SHEARWALLS SHALL BE DOUBLED TYPICAL UNLESS NOTED OTHERWISE BLOCKING AT BEARING AND SHEARWALLS SHALL BE PER BEARING AND SHEARWALL SCHEDULE. FLOOR SHEATHING SHALL BE GLUED AND NAILED.
2. WALLS INDICATED ARE BELOW THE FRAMING LEVEL ARE SHOWN SOLID. WALLS ABOVE ARE SHOWN HALFTONE. RE: BEARING WALL SCHEDULE THIS SHEET.
3. PLUMBING, MECHANICAL, AND ELECTRICAL SYSTEMS SHALL BE DESIGNED AND BUILT TO ACCOMMODATE 3/8" PER FLOOR WOOD SHRINKAGE
4. RE: DETAIL 1/S9.10 FOR TYPICAL HEADER/BUNDLED STUD CONSTRUCTION.
5. SEE ARCHITECTURAL FOR DRAFTSTOP AND VENTING LOCATIONS AND WATERPROOFING.
6. FRAMING MEMBERS AND SHEATHING SHALL BE OF SIZE AND TYPE PER PLAN AND STRUCTURAL NOTES SHEET S1.02.
7. SOME SHEARWALLS REQUIRE 3X FRAMING AT PANEL EDGES. SEE SHEARWALL SCHEDULE ON SHEET S1.20
8. HANGERS INDICATED ARE AS MANUFACTURED BY SIMPSON STRONG-TIE. RE: SHEET S9.20 FOR BEAM HANGER SCHEDULE.
9. PROVIDE JOIST OR BLOCKING ATOP AND ALIGNING WITH ALL SHEARWALLS. RE: PLAN AND SHEET S9.20, AND DETAILS S1.20.
10. SEE ARCHITECTURAL DRAWINGS FOR DIMENSIONS AND TOP PLATE ELEVATIONS.
11. BUNDLED STUDS FROM THIS LEVEL SHALL BE CONTINUED DOWN TO LEVEL 2 PT SLAB OR SUPPORTING BEAM.
12. ALL HEADERS SHALL HAVE A MINIMUM OF (1) FULL HEIGHT STUD AT EACH END FOR BRACING TYPICAL UNLESS NOTED OTHERWISE. RE: 1/S9.10.
13. PROVIDE MINIMUM (2) 2X BUNDLED STUDS UNDER EACH BEAM END, TYPICAL UNLESS NOTED OTHERWISE. RE: 1/S9.10.
14. SEE DETAILS 11 & 12/S9.10 FOR TYPICAL CORNER FRAMING DETAILS.
15. SEE SHEET S8.01 FOR TYPICAL ELEVATOR DIVIDER BEAM AND ELEVATOR RAIL MOUNTING PLATES.
16. AT BRICK VENEER, RE: DETAILS 18 & 19/S9.10 AND STRUCTURAL NOTES.

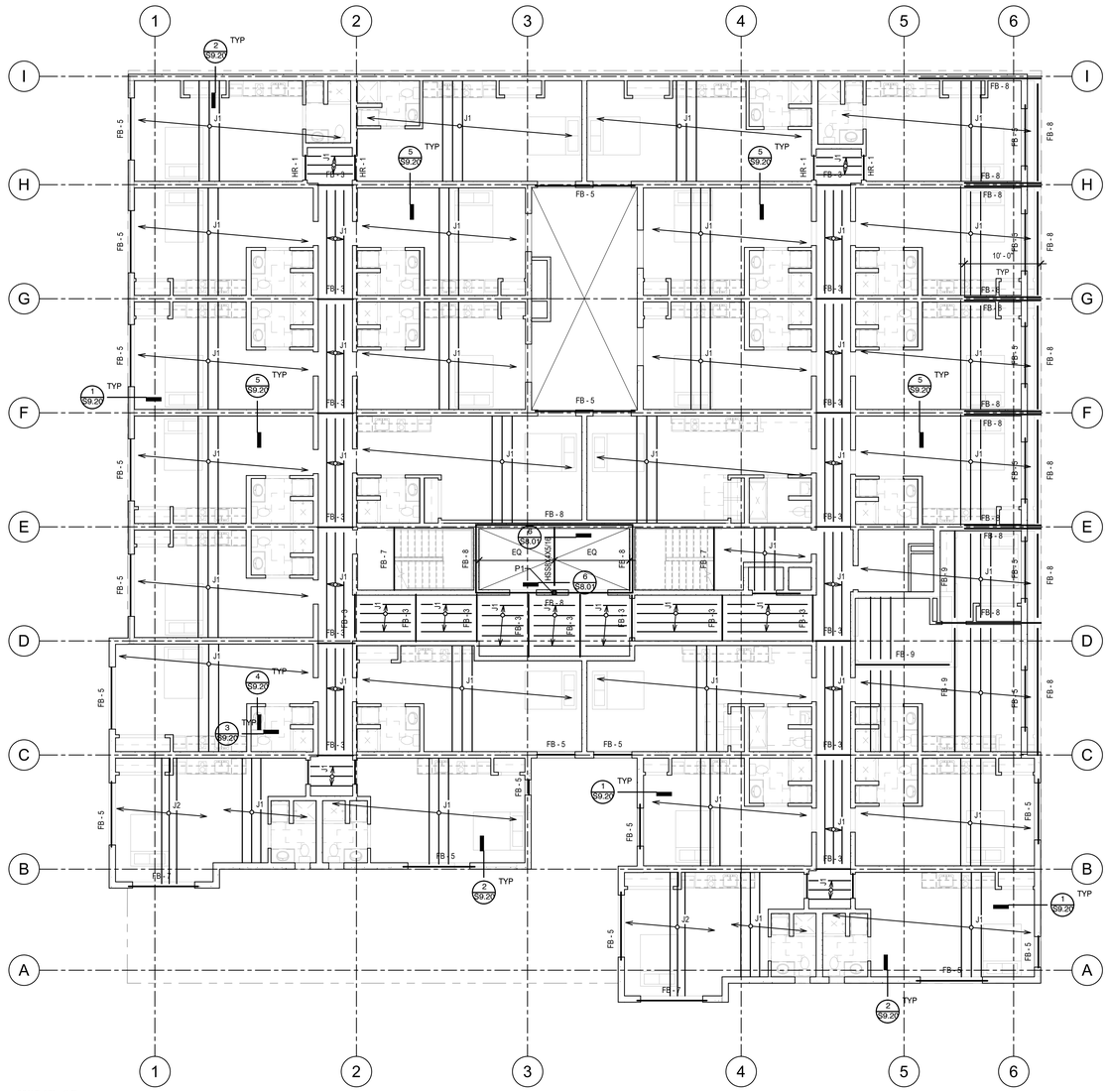

SCALE: 1/8" = 1'-0"
1
LEVEL 4 FLOOR FRAMING PLAN

GRAPHIC SCALE
-8' 0' 4' 8' 16'
(1" : 8'-0")

CT ENGINEERING INC.
Structural Engineers
180 Nickerson Street Suite 302 Seattle, WA 98109
206.285.4512 (V) 206.285.0618 (F)
www.ctengineering.com

01.21.2021

No.	REVISION	DATE

JOB #: 20021
ENG: TSW
CAD: TSW
SCALE: As indicated
KEY ISSUE DATES:
PERMIT: 01.21.2021

FOR PERMIT

Level 4 Floor Framing Plan
BLOSSOM APARTMENTS
214-220 5th Avenue S
Seattle, WA 98104

S2.08

C:\Users\TSwindsor\work\Documents\20021 - Blossom Apartments - v20_tsWindsor@ctengineering.com.rvt
1/21/2021 11:16:19 AM

Bearing Wall Stud Schedule

WALL TYPE	LEVEL ABOVE PT DECK	PLATE SIZE	RIM / BLOCKING	STUD SIZE AND SPACING
EXTERIOR 2X6	PENTHOUSE L4-ROOF L3	2 X 6 2 X 6 2 X 6		2 X 6 AT 16" O.C. 2 X 6 AT 16" O.C. (2)2 X 6 AT 16" O.C.
PARTY WALL (STAGGERED)	PENTHOUSE ROOF L5-L8 L3-L4	2 X 8 2 X 8 2 X 8 2 X 8		2 X 4 AT 16" O.C. EACH SIDE 2 X 4 AT 16" O.C. EACH SIDE 2 X 4 AT 16" O.C. EACH SIDE (2) 2 X 4 AT 16" O.C. EACH SIDE
CORRIDOR WALL	PENTHOUSE L4-ROOF L3	2 X 6 2 X 6 2 X 6		2 X 6 AT 16" O.C. 2 X 6 AT 16" O.C. (2)2 X 6 AT 16" O.C.
STAIR WALL FIRE WALL ELEVATOR WALL	PENTHOUSE ROOF L4-ROOF L3	2 X 6 2 X 6 2 X 6 2 X 6		2 X 6 AT 16" O.C. 2 X 4 AT 16" O.C. 2 X 6 AT 16" O.C. (2)2 X 6 AT 16" O.C.
INTERIOR 2X4	PENTHOUSE ROOF L5-L8 L3-L4	2 X 4 2 X 4 2 X 4 2 X 4		2 X 4 AT 16" O.C. 2 X 4 AT 16" O.C. 2 X 4 AT 16" O.C. (2) 2 X 4 AT 16" O.C.

BEARING WALL NOTES
1. SEE SHEARWALL PLAN SHEET S2.04 AND SHEARWALL SCHEDULE SHEET S1.20 FOR WALL SHEATHING, ADDITIONAL PLATE AND STUD REQUIREMENTS, BLOCKING AND PLATE NAILING. SEE SAWN LUMBER STRUCTURAL NOTES SHEET S1.02 FOR SPECIES AND GRADE OF WALL PLATES AND STUD
2. SECURE SILL PLATES TO CONCRETE WITH 5/8" DIA. X 10" LONG ANCHOR BOLTS WITH 7" EMBED. AT 48" ON CENTER TYPICAL UNLESS NOTED OTHERWISE. REFER TO SHEET S2.04 AND SHEARWALL AND HOLDOWN SCHEDULE SHEET S1.20 AND S1.30 FOR ADDITIONAL ANCHOR BOLT REQUIREMENTS. WHERE FRTW OR PRESERVATIVE TREATED WOOD IS USED, REFER TO THAT NOTE SECTION FOR CORROSION PROTECTION REQUIREMENTS FOR CONNECTORS.
3. SEE DETAIL 2/S9.10 FOR TOP PLATE SPLICE. PROVIDE ADDITIONAL CONNECTORS AT SHEARWALLS AS INDICATED ON THE PLANS.
4. PROVIDE (1) ADDITIONAL STUD X SPACING PER BEARING WALL SCHEDULE. TYPICAL AT ALL WALL DIRECTLY BELOW THE ROOF DECK. TYPICAL PT SLAB TO ROOF.

Floor Joist Schedule

		CLEAR SPAN	D	L	PART.	PRO	11 7/8" JOIST
RESIDENTIAL	J1	UP TO 14'-0"	25	40	10	50	TJI 210 AT 16" O.C.
	J2	14'-1" TO 16'-6"	25	40	10	50	TJI 230 AT 16" O.C.
COMMON AREAS							

W_{DL} = RE: SCHEDULE
W_{LL} = RE: SCHEDULE

JOIST MANUFACTURER SHALL PROVIDE LAYOUT DRAWING FOR APPROVAL.
"PRO" INDICATES DESIRED TJI-PRO RATING SYSTEM VALUE, AND SUBSTITUTIONS SHALL FURNISH EVIDENCE OF EQUIVALENT FLOOR STIFFNESS THAT MY BE GREATER THAN THAT REQUIRED BY CODE.

NOTE:
RE: ARCHITECTURAL REFLECTED CEILING PLANS FOR DROPPED CEILINGS WHICH REQUIRE DEEPER TJI JOISTS OF SAME SERIES.

Framing Legend

POST TYPE PER SCHEDULE THIS SHEET

BEAM SIZE PER SCHEDULE

HR - HEADER
FB - FLUSH BEAM
DB - DROPPED BEAM
UP - UP-TURNED BEAM

PLYWOOD SHEARWALL PER SHEETS S1.20 & S2.04

HOLDOWNS PER SCHEDULE SHEETS S1.30 & S2.04

BEARING WALL PER SCHEDULE THIS SHEET

DRAG STRAP RE:

WATERPROOFED ROOF DECK PER ARCH.

Note:
ALL SECTION CUTS ARE TYPICAL

Floor Framing Notes

1. FLOOR FRAMING - 11 7/8" DEEP TJI, RE: FLOOR JOIST SCHEDULE. TYPICAL UNLESS NOTED OTHERWISE. RE: 6/S9.10 FOR JOIST HANGERS AT FLUSH FRAMING CONDITIONS. SECURE JOIST TO TOP PLATES WITH (2) 8d NAILS. JOISTS UNDER AND PARALLEL TO BEARING AND SHEARWALLS SHALL BE DOUBLED TYPICAL UNLESS NOTED OTHERWISE BLOCKING AT BEARING AND SHEARWALLS SHALL BE PER BEARING AND SHEARWALL SCHEDULE. FLOOR SHEATHING SHALL BE GLUED AND NAILED.
2. WALLS INDICATED ARE BELOW THE FRAMING LEVEL ARE SHOWN SOLID. WALLS ABOVE ARE SHOWN HALFTONE. RE: BEARING WALL SCHEDULE THIS SHEET.
3. PLUMBING, MECHANICAL, AND ELECTRICAL SYSTEMS SHALL BE DESIGNED AND BUILT TO ACCOMMODATE 3/8" PER FLOOR WOOD SHRINKAGE.
4. RE: DETAIL 1/S9.10 FOR TYPICAL HEADER/BUNDLED STUD CONSTRUCTION.
5. SEE ARCHITECTURAL FOR DRAFTSTOP AND VENTING LOCATIONS AND WATERPROOFING.
6. FRAMING MEMBERS AND SHEATHING SHALL BE OF SIZE AND TYPE PER PLAN AND STRUCTURAL NOTES SHEET S1.02.
7. SOME SHEARWALLS REQUIRE 3X FRAMING AT PANEL EDGES. SEE SHEARWALL SCHEDULE ON SHEET S1.20
8. HANGERS INDICATED ARE AS MANUFACTURED BY SIMPSON STRONG-TIE. RE: SHEET S9.20 FOR BEAM HANGER SCHEDULE.
9. PROVIDE JOIST OR BLOCKING ATOP AND ALIGNING WITH ALL SHEARWALLS. RE: PLAN AND SHEET S9.20. AND DETAILS S1.20.
10. SEE ARCHITECTURAL DRAWINGS FOR DIMENSIONS AND TOP PLATE ELEVATIONS.
11. BUNDLED STUDS FROM THIS LEVEL SHALL BE CONTINUED DOWN TO LEVEL 2 PT SLAB OR SUPPORTING BEAM.
12. ALL HEADERS SHALL HAVE A MINIMUM OF (1) FULL HEIGHT STUD AT EACH END FOR BRACING TYPICAL UNLESS NOTED OTHERWISE. RE: 1/S9.10.
13. PROVIDE MINIMUM (2) 2X BUNDLED STUDS UNDER EACH BEAM END, TYPICAL UNLESS NOTED OTHERWISE. RE: 1/S9.10.
14. SEE DETAILS 11 & 12/S9.10 FOR TYPICAL CORNER FRAMING DETAILS.
15. SEE SHEET S8.01 FOR TYPICAL ELEVATOR DIVIDER BEAM AND ELEVATOR RAIL MOUNTING PLATES.
16. AT BRICK VENEER, RE: DETAILS 18 & 19/S9.10 AND STRUCTURAL NOTES.

Wood Beam Schedule

MARK	SIZE	POST TYPE
XX-1	4 X 8 DF#2	A
XX-2	5 1/2 X 7 1/2 GLB	B
XX-3	LEVEL 4 X 5 1/4 PSL	C
XX-4	ABOVE 5 1/2 X 9 1/2 PSL	D
XX-5	PT DECK 5 1/2 X 12 LSL	E

Wood Beam Schedule

MARK	SIZE	POST TYPE
XX-6	(2) 1 3/4 X 11 7/8 LSL	B
XX-6	5 1/2 X 9 1/2 PSL	C
XX-6	5 1/2 X 12 PSL	D

Wood Post Schedule

	TYPE B	TYPE C	TYPE D	TYPE E	TYPE F	TYPE G	TYPE H
7	2X6 PL	2X4 PL	2X6 PL	2X4 PL	2X6 PL	2X6 PL	2X4 PL
6	(2)2X4	(2)2X6	(2)2X4	(2)2X6	(2)2X4	(2)2X6	-
5	(2)2X4	(2)2X6	(2)2X4	(2)2X6	(2)2X4	(2)2X6	-
4	(3)2X4	(2)2X6	(3)2X4	(2)2X6	(4)2X4	(4)2X6	-
3	(3)2X4	(3)2X6	(3)2X4	(3)2X6	(4)2X4	(3)2X6	4X6
2	(4)2X4	(3)2X6	(5)2X4	(4)2X6	(5)2X4	(4)2X6	4X8
1	(5)2X4	(4)2X6	(6)2X4	(5)2X6	4X8	(5)2X6	4X8

WOOD POST SCHEDULE NOTES
1. STUDS, PLATES AND GENERAL FRAMING SHALL BE DOUG FIR.
2. 4X AND 6X POSTS SHALL BE DOUG FIR NO. 2 WITH DOUG FIR PLATES.
3. RE: FOR TYPICAL BUNDLED STUD AND BLOCKING DETAILS
4. POSTS NOT CALLED OUT SHALL CONFORM TO TYPE A MINIMUM.
5. WOOD POST SCHEDULE IS TYPICAL, U.N.O. ON PLANS.

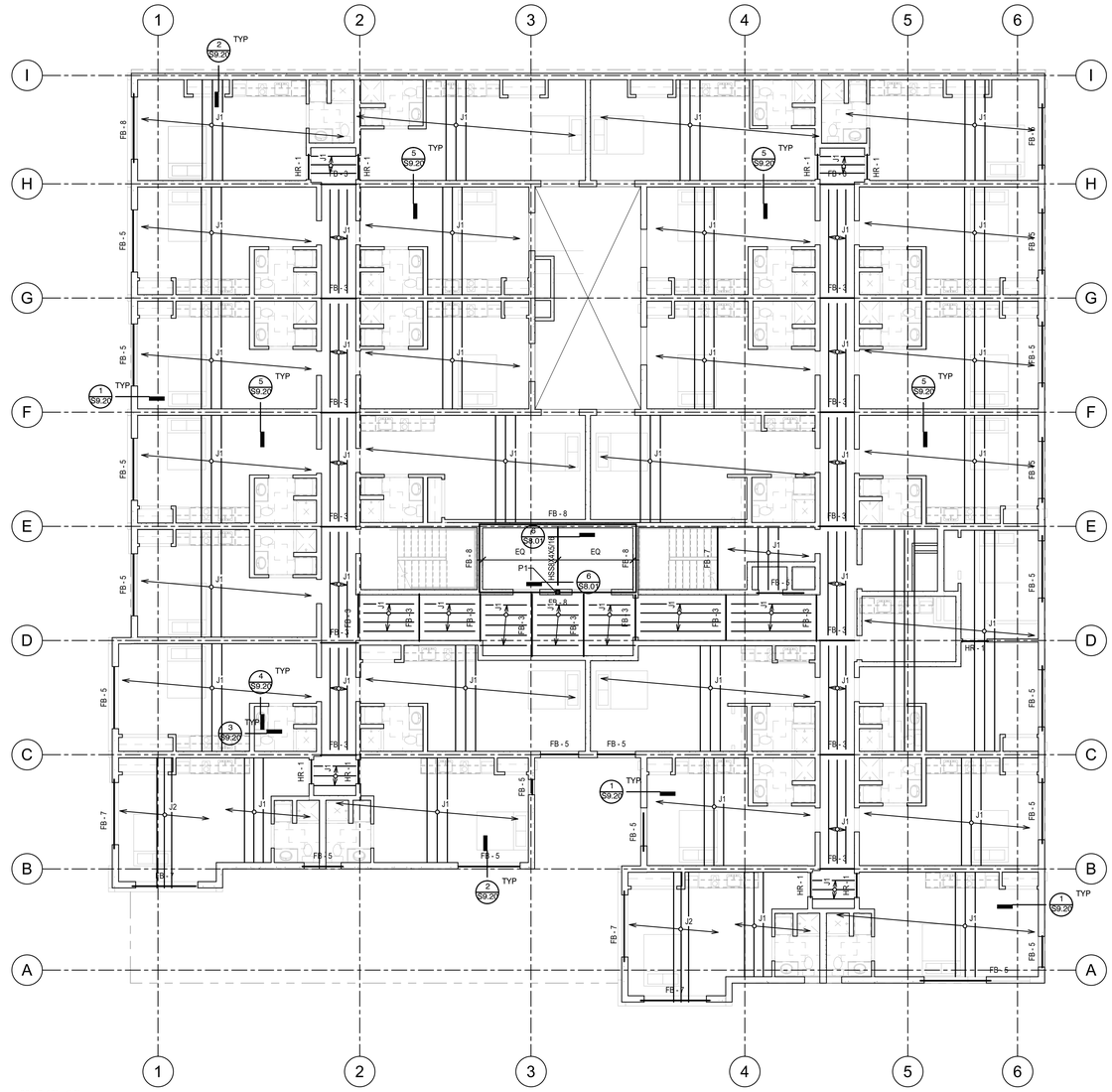

SCALE: 1/8" = 1'-0"
1 LEVEL 5 FLOOR FRAMING

GRAPHIC SCALE
-8' 0' 4' 8' 16'
(1" : 8'-0")

CT ENGINEERING INC.
Structural Engineers
160 Nickerson Street Suite 302 Seattle, WA 98109
206.285.4512 (V) 206.285.0618 (F)
www.ctengineering.com

01.21.2021

No.	REVISION	DATE

JOB #: 20021
ENG: TSW
CAD: TSW
SCALE: As indicated
KEY ISSUE DATES:
PERMIT: 01.21.2021

FOR PERMIT

Level 5 Floor Framing Plan
BLOSSOM APARTMENTS
214-220 5th Avenue S
Seattle, WA 98104

S2.09

C:\Users\TSW\ctengineering\Documents\20021 - Blossom Apartments - v20.1\tsw@ctengineering.com.rvt
1/21/2021 11:16:24 AM

Bearing Wall Stud Schedule

WALL TYPE	LEVEL ABOVE PT DECK	PLATE SIZE	RIM / BLOCKING	STUD SIZE AND SPACING
EXTERIOR 2X6	PENTHOUSE L4-ROOF L3	2 X 6 2 X 6 2 X 6		2 X 6 AT 16" O.C. 2 X 6 AT 16" O.C. (2)2 X 6 AT 16" O.C.
PARTY WALL (STAGGERED)	PENTHOUSE ROOF L5-L8 L3-L4	2 X 8 2 X 8 2 X 8 2 X 8		2 X 4 AT 16" O.C. EACH SIDE 2 X 4 AT 16" O.C. EACH SIDE 2 X 4 AT 16" O.C. EACH SIDE (2) 2 X 4 AT 16" O.C. EACH SIDE
CORRIDOR WALL	PENTHOUSE L4-ROOF L3	2 X 6 2 X 6 2 X 6		2 X 6 AT 16" O.C. 2 X 6 AT 16" O.C. (2)2 X 6 AT 16" O.C.
STAIR WALL FIRE WALL ELEVATOR WALL	PENTHOUSE ROOF L4-ROOF L3	2 X 6 2 X 6 2 X 6 2 X 6		2 X 6 AT 16" O.C. 2 X 4 AT 16" O.C. 2 X 6 AT 16" O.C. (2)2 X 6 AT 16" O.C.
INTERIOR 2X4	PENTHOUSE ROOF L5-L8 L3-L4	2 X 4 2 X 4 2 X 4 2 X 4		2 X 4 AT 16" O.C. 2 X 4 AT 16" O.C. 2 X 4 AT 16" O.C. (2) 2 X 4 AT 16" O.C.

BEARING WALL NOTES
1. SEE SHEARWALL PLAN SHEET S2.04 AND SHEARWALL SCHEDULE SHEET S1.20 FOR WALL SHEATHING, ADDITIONAL PLATE AND STUD REQUIREMENTS, BLOCKING AND PLATE NAILING. SEE SAWN LUMBER STRUCTURAL NOTES SHEET S1.02 FOR SPECIES AND GRADE OF WALL PLATES AND STUD
2. SECURE SILL PLATES TO CONCRETE WITH 5/8" DIA. X 10" LONG ANCHOR BOLTS WITH 7" EMBED. AT 48" ON CENTER TYPICAL UNLESS NOTED OTHERWISE. REFER TO SHEET S2.04 AND SHEARWALL AND HOLDOWN SCHEDULE SHEET S1.20 AND S1.30 FOR ADDITIONAL ANCHOR BOLT REQUIREMENTS. WHERE FRTW OR PRESERVATIVE TREATED WOOD IS USED, REFER TO THAT NOTE SECTION FOR CORROSION PROTECTION REQUIREMENTS FOR CONNECTORS.
3. SEE DETAIL 2/S9.10 FOR TOP PLATE SPLICE. PROVIDE ADDITIONAL CONNECTORS AT SHEARWALLS AS INDICATED ON THE PLANS.
4. PROVIDE (1) ADDITIONAL STUD X SPACING PER BEARING WALL SCHEDULE. TYPICAL AT ALL WALL DIRECTLY BELOW THE ROOF DECK. TYPICAL PT SLAB TO ROOF.

Floor Joist Schedule

		CLEAR SPAN	D	L	PART.	PRO	11 7/8" JOIST
RESIDENTIAL	J1	UP TO 14'-0"	25	40	10	50	TJI 210 AT 16" O.C.
	J2	14'-1" TO 16'-6"	25	40	10	50	TJI 230 AT 16" O.C.
COMMON AREAS							

W_{DL} = RE: SCHEDULE
W_{LL} = RE: SCHEDULE

JOIST MANUFACTURER SHALL PROVIDE LAYOUT DRAWING FOR APPROVAL. "PRO" INDICATES DESIRED TJI-PRO RATING SYSTEM VALUE, AND SUBSTITUTIONS SHALL FURNISH EVIDENCE OF EQUIVALENT FLOOR STIFFNESS THAT MY BE GREATER THAN THAT REQUIRED BY CODE.

NOTE:
RE: ARCHITECTURAL REFLECTED CEILING PLANS FOR DROPPED CEILINGS WHICH REQUIRE DEEPER TJI JOISTS OF SAME SERIES.

Framing Legend

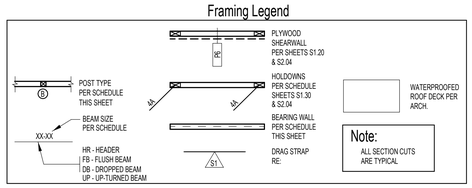

Floor Framing Notes

1. FLOOR FRAMING - 11 7/8" DEEP TJI, RE: FLOOR JOIST SCHEDULE. TYPICAL UNLESS NOTED OTHERWISE. RE: 6/S9.10 FOR JOIST HANGERS AT FLUSH FRAMING CONDITIONS. SECURE JOIST TO TOP PLATES WITH (2) 8d NAILS. JOISTS UNDER AND PARALLEL TO BEARING AND SHEARWALLS SHALL BE DOUBLED TYPICAL UNLESS NOTED OTHERWISE BLOCKING AT BEARING AND SHEARWALLS SHALL BE PER BEARING AND SHEARWALL SCHEDULE. FLOOR SHEATHING SHALL BE GLUED AND NAILED.
2. WALLS INDICATED ARE BELOW THE FRAMING LEVEL ARE SHOWN SOLID. WALLS ABOVE ARE SHOWN HALFTONE. RE: BEARING WALL SCHEDULE THIS SHEET.
3. PLUMBING, MECHANICAL, AND ELECTRICAL SYSTEMS SHALL BE DESIGNED AND BUILT TO ACCOMMODATE 3/8" PER FLOOR WOOD SHRINKAGE.
4. RE: DETAIL 1/S9.10 FOR TYPICAL HEADER/BUNDLED STUD CONSTRUCTION.
5. SEE ARCHITECTURAL FOR DRAFTSTOP AND VENTING LOCATIONS AND WATERPROOFING.
6. FRAMING MEMBERS AND SHEATHING SHALL BE OF SIZE AND TYPE PER PLAN AND STRUCTURAL NOTES SHEET S1.02.
7. SOME SHEARWALLS REQUIRE 3X FRAMING AT PANEL EDGES. SEE SHEARWALL SCHEDULE ON SHEET S1.20
8. HANGERS INDICATED ARE AS MANUFACTURED BY SIMPSON STRONG-TIE. RE: SHEET S9.20 FOR BEAM HANGER SCHEDULE.
9. PROVIDE JOIST OR BLOCKING ATOP AND ALIGNING WITH ALL SHEARWALLS. RE: PLAN AND SHEET S9.20. AND DETAILS S1.20.
10. SEE ARCHITECTURAL DRAWINGS FOR DIMENSIONS AND TOP PLATE ELEVATIONS.
11. BUNDLED STUDS FROM THIS LEVEL SHALL BE CONTINUED DOWN TO LEVEL 2 PT SLAB OR SUPPORTING BEAM.
12. ALL HEADERS SHALL HAVE A MINIMUM OF (1) FULL HEIGHT STUD AT EACH END FOR BRACING TYPICAL UNLESS NOTED OTHERWISE. RE: 1/S9.10.
13. PROVIDE MINIMUM (2) 2X BUNDLED STUDS UNDER EACH BEAM END, TYPICAL UNLESS NOTED OTHERWISE. RE: 1/S9.10.
14. SEE DETAILS 11 & 12/S9.10 FOR TYPICAL CORNER FRAMING DETAILS.
15. SEE SHEET S8.01 FOR TYPICAL ELEVATOR DIVIDER BEAM AND ELEVATOR RAIL MOUNTING PLATES.
16. AT BRICK VENEER, RE: DETAILS 18 & 19/S9.10 AND STRUCTURAL NOTES.

Wood Beam Schedule

MARK	SIZE	POST TYPE
XX-1	4 X 8 DF#2	A
XX-2	5 1/2 X 7 1/2 GLB	B
XX-3	LEVEL 4 X 5 1/4 PSL	C
XX-4	ABOVE 5 1/2 LSL	D
XX-5	PT DECK 5 1/2 LSL	E

Wood Beam Schedule

MARK	SIZE	POST TYPE
XX-6	(2) 1 3/4 X 11 7/8 LSL	B
XX-6	5 1/2 X 9 1/2 PSL	C
XX-6	7 X 9 1/2 PSL	D

Wood Post Schedule

	TYPE B	TYPE C	TYPE D	TYPE E	TYPE F	TYPE G	TYPE H
	2X6 PL	2X4 PL	2X6 PL	2X4 PL	2X6 PL	2X6 PL	2X4 PL
6	(2)2X4	(2)2X6	(2)2X4	(2)2X6	(2)2X4	(2)2X6	(2)2X6		4X6	4X6	-
5	(2)2X4	(2)2X6	(2)2X4	(2)2X6	(2)2X4	(2)2X6	(2)2X6		4X6	4X6	-
4	(3)2X4	(2)2X6	(3)2X4	(2)2X6	(4)2X4	(3)2X6	(4)2X4	(4)2X6		4X6	4X6	-
3	(3)2X4	(3)2X6	(3)2X4	(3)2X6	(4)2X4	(3)2X6	4X6	(4)2X6	(3)2X6	6X6	6X6	(4)2X4
2	(4)2X4	(3)2X6	(5)2X4	(4)2X6	(5)2X4	(4)2X6	4X8	6X8	(4)2X6	6X6	6X6	(8)2X4
1	(5)2X4	(4)2X6	(6)2X4	(5)2X6	4X8	(5)2X6	4X8	6X8	(4)2X6	6X8	8X6	3" PIPE

WOOD POST SCHEDULE NOTES
1. STUDS, PLATES AND GENERAL FRAMING SHALL BE DOUG FIR.
2. 4X AND 6X POSTS SHALL BE DOUG FIR NO. 2 WITH DOUG FIR PLATES.
3. RE: FOR TYPICAL BUNDLED STUD AND BLOCKING DETAILS
4. POSTS NOT CALLED OUT SHALL CONFORM TO TYPE A MINIMUM.
5. WOOD POST SCHEDULE IS TYPICAL, U.N.O. ON PLANS.

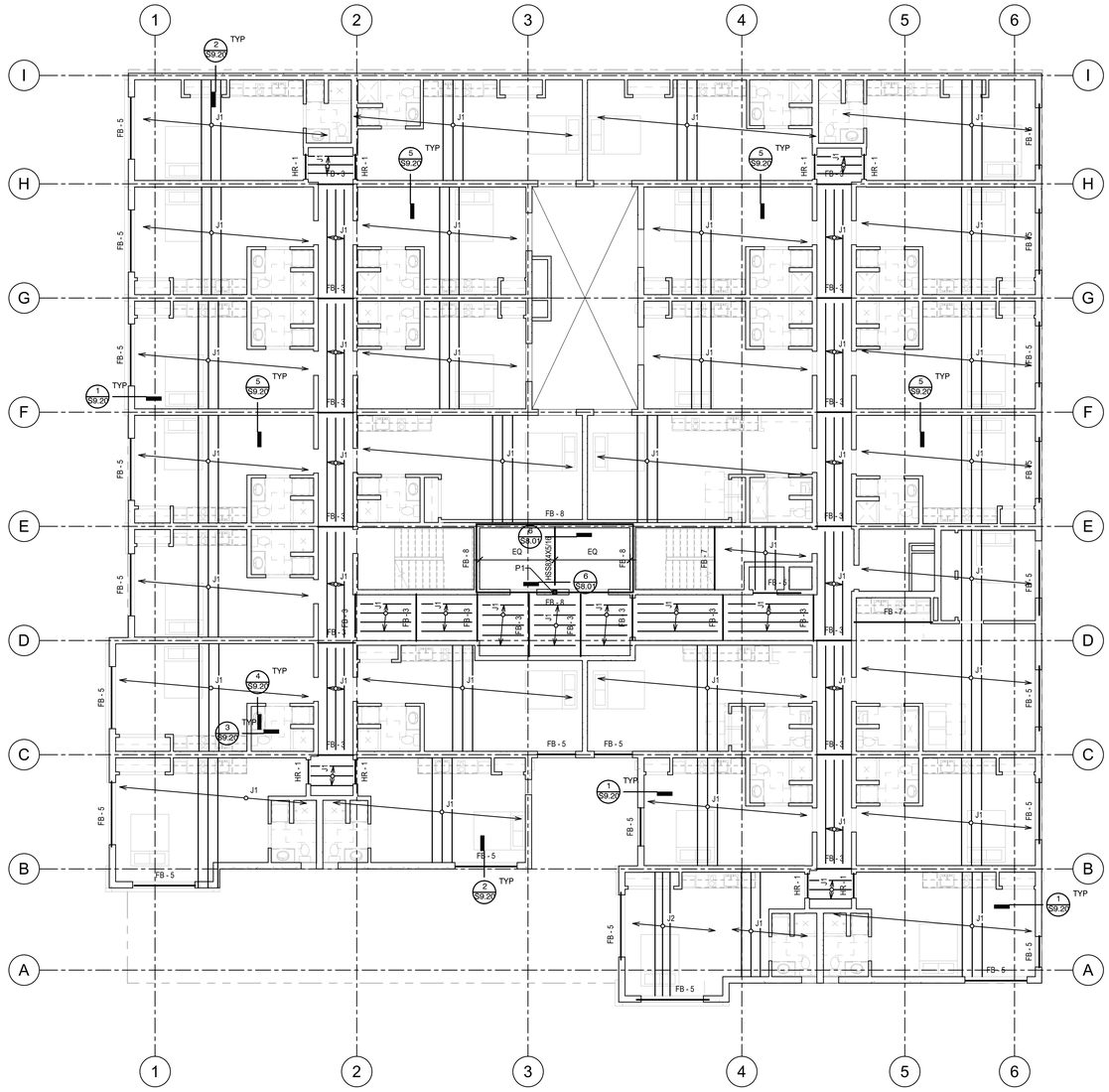

SCALE: 1/8" = 1'-0"
1 LEVEL 6 FLOOR FRAMING

GRAPHIC SCALE
-8' 0' 4' 8' 16'
(1" : 8'-0")

CT ENGINEERING INC.
Structural Engineers
180 Nickerson Street Suite 302 Seattle, WA 98109
206.285.4512 (V) 206.285.0618 (F)
www.ctengineering.com

01.21.2021

No.	REVISION	DATE

JOB #: 20021
ENG: TSW
CAD: TSW
SCALE: As indicated
KEY ISSUE DATES:
PERMIT: 01.21.2021

FOR PERMIT

Level 6 Floor Framing Plan
BLOSSOM APARTMENTS
214-220 5th Avenue S
Seattle, WA 98104

S2.10

C:\Users\TSwindsor\work\Documents\2021 - Blossom Apartments - v20_tsWindsor@ctengineering.com.rvt
1/21/2021 11:16:29 AM

Bearing Wall Stud Schedule

WALL TYPE	LEVEL ABOVE PT DECK	PLATE SIZE	RIM / BLOCKING	STUD SIZE AND SPACING
EXTERIOR 2X6	PENTHOUSE L4-ROOF L3	2 X 6 2 X 6 2 X 6		2 X 6 AT 16" O.C. 2 X 6 AT 16" O.C. (2)2 X 6 AT 16" O.C.
PARTY WALL (STAGGERED)	PENTHOUSE ROOF L5-L8 L3-L4	2 X 8 2 X 8 2 X 8 2 X 8		2 X 4 AT 16" O.C. EACH SIDE 2 X 4 AT 16" O.C. EACH SIDE 2 X 4 AT 16" O.C. EACH SIDE (2) 2 X 4 AT 16" O.C. EACH SIDE
CORRIDOR WALL	PENTHOUSE L4-ROOF L3	2 X 6 2 X 6 2 X 6		2 X 6 AT 16" O.C. 2 X 6 AT 16" O.C. (2)2 X 6 AT 16" O.C.
STAIR WALL FIRE WALL ELEVATOR WALL	PENTHOUSE ROOF L4-ROOF L3	2 X 6 2 X 6 2 X 6 2 X 6		2 X 6 AT 16" O.C. 2 X 4 AT 16" O.C. 2 X 6 AT 16" O.C. (2)2 X 6 AT 16" O.C.
INTERIOR 2X4	PENTHOUSE ROOF L5-L8 L3-L4	2 X 4 2 X 4 2 X 4 2 X 4		2 X 4 AT 16" O.C. 2 X 4 AT 16" O.C. 2 X 4 AT 16" O.C. (2)2 X 4 AT 16" O.C.

BEARING WALL NOTES
1. SEE SHEARWALL PLAN SHEET S2.04 AND SHEARWALL SCHEDULE SHEET S1.20 FOR WALL SHEATHING, ADDITIONAL PLATE AND STUD REQUIREMENTS, BLOCKING AND PLATE NAILING. SEE SAWN LUMBER STRUCTURAL NOTES SHEET S1.02 FOR SPECIES AND GRADE OF WALL PLATES AND STUD
2. SECURE SILL PLATES TO CONCRETE WITH 5/8" DIA. X 10" LONG ANCHOR BOLTS WITH 7" EMBED. AT 48" ON CENTER TYPICAL UNLESS NOTED OTHERWISE. REFER TO SHEET S2.04 AND SHEARWALL AND HOLDOWN SCHEDULE SHEET S1.20 AND S1.30 FOR ADDITIONAL ANCHOR BOLT REQUIREMENTS. WHERE FRTW OR PRESERVATIVE TREATED WOOD IS USED, REFER TO THAT NOTE SECTION FOR CORROSION PROTECTION REQUIREMENTS FOR CONNECTORS.
3. SEE DETAIL 2/S9.10 FOR TOP PLATE SPLICE. PROVIDE ADDITIONAL CONNECTORS AT SHEARWALLS AS INDICATED ON THE PLANS.
4. PROVIDE (1) ADDITIONAL STUD X SPACING PER BEARING WALL SCHEDULE. TYPICAL AT ALL WALL DIRECTLY BELOW THE ROOF DECK. TYPICAL PT SLAB TO ROOF.

Floor Joist Schedule

		CLEAR SPAN	D	L	PART.	PRO	11 7/8" JOIST
RESIDENTIAL	J1	UP TO 14'-0"	25	40	10	50	TJI 210 AT 16" O.C.
	J2	14'-1" TO 16'-6"	25	40	10	50	TJI 230 AT 16" O.C.
COMMON AREAS							

W_{DL} = RE: SCHEDULE
W_{LL} = RE: SCHEDULE

JOIST MANUFACTURER SHALL PROVIDE LAYOUT DRAWING FOR APPROVAL.
"PRO" INDICATES DESIRED TJI-PRO RATING SYSTEM VALUE, AND SUBSTITUTIONS SHALL FURNISH EVIDENCE OF EQUIVALENT FLOOR STIFFNESS THAT MY BE GREATER THAN THAT REQUIRED BY CODE.

NOTE:
RE: ARCHITECTURAL REFLECTED CEILING PLANS FOR DROPPED CEILINGS WHICH REQUIRE DEEPER TJI JOISTS OF SAME SERIES.

Framing Legend

POST TYPE PER SCHEDULE THIS SHEET

BEAM SIZE PER SCHEDULE

HR - HEADER
FB - FLUSH BEAM
DB - DROPPED BEAM
UP - UP-TURNED BEAM

PLYWOOD SHEARWALL PER SHEETS S1.20 & S2.04

HOLDOWNS PER SCHEDULE SHEETS S1.30 & S2.04

BEARING WALL PER SCHEDULE THIS SHEET

DRAG STRAP RE:

WATERPROOFED ROOF DECK PER ARCH.

Note:
ALL SECTION CUTS ARE TYPICAL

Floor Framing Notes

1. FLOOR FRAMING - 11 7/8" DEEP TJI, RE: FLOOR JOIST SCHEDULE. TYPICAL UNLESS NOTED OTHERWISE. RE: 6/S9.10 FOR JOIST HANGERS AT FLUSH FRAMING CONDITIONS. SECURE JOIST TO TOP PLATES WITH (2) 8d NAILS. JOISTS UNDER AND PARALLEL TO BEARING AND SHEARWALLS SHALL BE DOUBLED TYPICAL UNLESS NOTED OTHERWISE BLOCKING AT BEARING AND SHEARWALLS SHALL BE PER BEARING AND SHEARWALL SCHEDULE. FLOOR SHEATHING SHALL BE GLUED AND NAILED.
2. WALLS INDICATED ARE BELOW THE FRAMING LEVEL ARE SHOWN SOLID. WALLS ABOVE ARE SHOWN HALFTONE. RE: BEARING WALL SCHEDULE THIS SHEET.
3. PLUMBING, MECHANICAL, AND ELECTRICAL SYSTEMS SHALL BE DESIGNED AND BUILT TO ACCOMMODATE 3/8" PER FLOOR WOOD SHRINKAGE.
4. RE: DETAIL 1/S9.10 FOR TYPICAL HEADER/BUNDLED STUD CONSTRUCTION.
5. SEE ARCHITECTURAL FOR DRAFTSTOP AND VENTING LOCATIONS AND WATERPROOFING.
6. FRAMING MEMBERS AND SHEATHING SHALL BE OF SIZE AND TYPE PER PLAN AND STRUCTURAL NOTES SHEET S1.02.
7. SOME SHEARWALLS REQUIRE 3X FRAMING AT PANEL EDGES. SEE SHEARWALL SCHEDULE ON SHEET S1.20
8. HANGERS INDICATED ARE AS MANUFACTURED BY SIMPSON STRONG-TIE. RE: SHEET S9.20 FOR BEAM HANGER SCHEDULE.
9. PROVIDE JOIST OR BLOCKING ATOP AND ALIGNING WITH ALL SHEARWALLS. RE: PLAN AND SHEET S9.20. AND DETAILS S1.20.
10. SEE ARCHITECTURAL DRAWINGS FOR DIMENSIONS AND TOP PLATE ELEVATIONS.
11. BUNDLED STUDS FROM THIS LEVEL SHALL BE CONTINUED DOWN TO LEVEL 2 PT SLAB OR SUPPORTING BEAM.
12. ALL HEADERS SHALL HAVE A MINIMUM OF (1) FULL HEIGHT STUD AT EACH END FOR BRACING TYPICAL UNLESS NOTED OTHERWISE. RE: 1/S9.10.
13. PROVIDE MINIMUM (2) 2X BUNDLED STUDS UNDER EACH BEAM END, TYPICAL UNLESS NOTED OTHERWISE. RE: 1/S9.10.
14. SEE DETAILS 11 & 12/S9.10 FOR TYPICAL CORNER FRAMING DETAILS.
15. SEE SHEET S8.01 FOR TYPICAL ELEVATOR DIVIDER BEAM AND ELEVATOR RAIL MOUNTING PLATES.
16. AT BRICK VENEER, RE: DETAILS 18 & 19/S9.10 AND STRUCTURAL NOTES.

Wood Beam Schedule

MARK	SIZE	POST TYPE
XX-1	4 X 8 DF#2	A
XX-2	5 1/2 X 7 1/2 GLB	B
XX-3	LEVEL 4 X 5 1/4 PSL	C
XX-4	ABOVE 5 1/2 X 9 1/2 PSL	D
XX-5	PT DECK 5 1/2 X 12 LSL	E

Wood Beam Schedule

MARK	SIZE	POST TYPE
XX-6	(2) 1 3/4 X 11 7/8 LSL	B
XX-8	5 1/2 X 9 1/2 PSL	C
XX-9	7 X 9 1/2 PSL	D

Wood Post Schedule

	TYPE B	TYPE C	TYPE D	TYPE E	TYPE F	TYPE G	TYPE H
	2X6 PL	2X4 PL	2X6 PL	2X4 PL	2X6 PL	2X6 PL	2X4 PL
6	(2)2X4	(2)2X6	(2)2X4	(2)2X6	(2)2X4	(2)2X6	-
5	(2)2X4	(2)2X6	(2)2X4	(2)2X6	(2)2X4	(2)2X6	-
4	(3)2X4	(2)2X6	(3)2X4	(2)2X6	(4)2X4	(4)2X6	-
3	(3)2X4	(3)2X6	(3)2X4	(3)2X6	(4)2X4	(3)2X6	4X6
2	(4)2X4	(3)2X6	(5)2X4	(4)2X6	(5)2X4	(4)2X6	4X8
1	(5)2X4	(4)2X6	(6)2X4	(5)2X6	4X8	(5)2X6	4X8

	TYPE E	TYPE F	TYPE G	TYPE H
	2X6 PL	2X6 PL	2X6 PL	2X4 PL
6		4X6	4X6	-
5		4X6	4X6	-
4		4X6	4X6	-
3	(3)2X6	6X6	6X6	(4)2X4
2	(4)2X6	6X6	6X6	(8)2X4
1	(4)2X6	6X8	8X6	3" PIPE

WOOD POST SCHEDULE NOTES
1. STUDS, PLATES AND GENERAL FRAMING SHALL BE DOUG FIR.
2. 4X AND 6X POSTS SHALL BE DOUG FIR NO. 2 WITH DOUG FIR PLATES.
3. RE: FOR TYPICAL BUNDLED STUD AND BLOCKING DETAILS
4. POSTS NOT CALLED OUT SHALL CONFORM TO TYPE A MINIMUM.
5. WOOD POST SCHEDULE IS TYPICAL, U.N.O. ON PLANS.

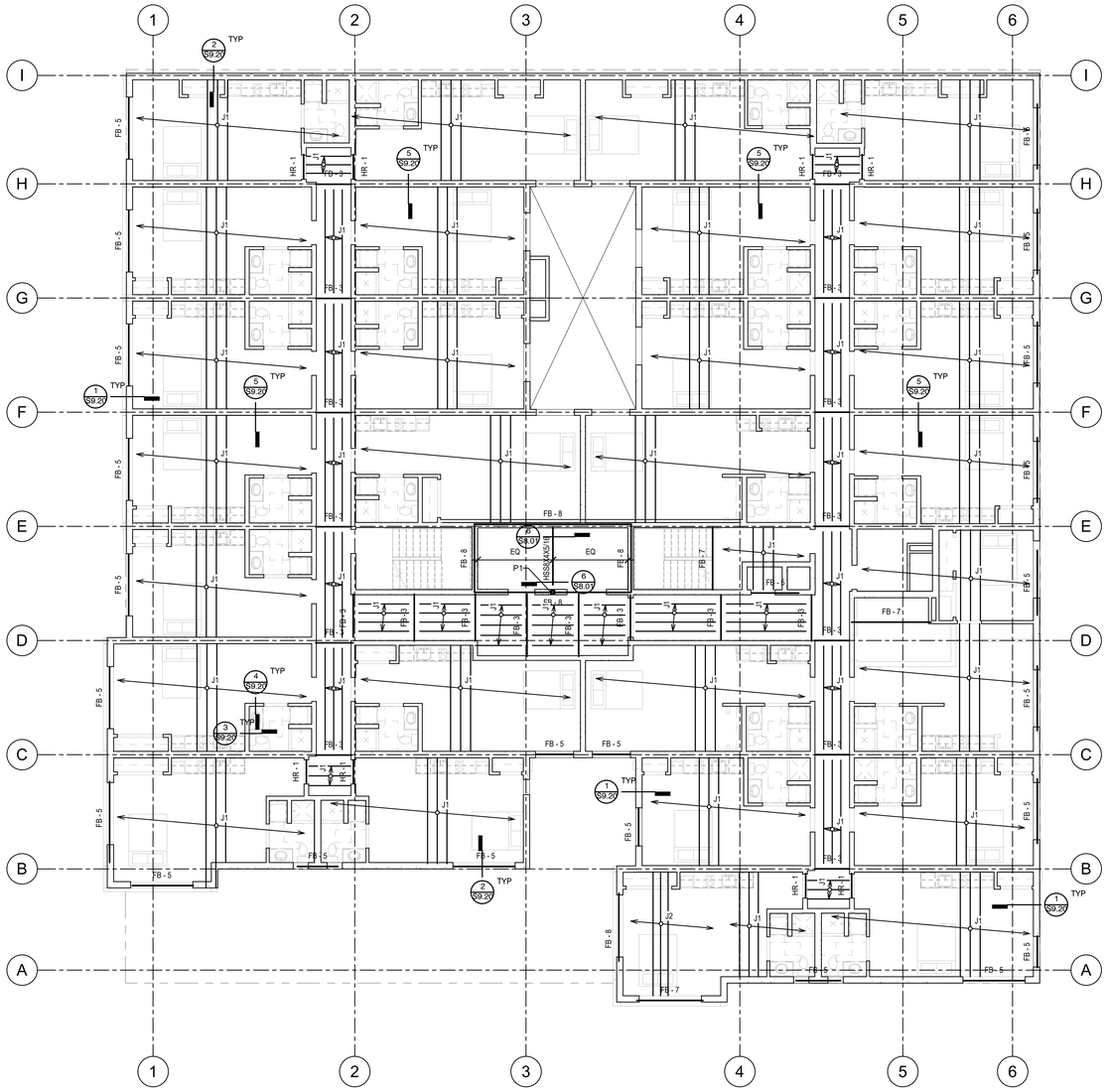

SCALE: 1/8" = 1'-0"
1 LEVEL 7 FLOOR FRAMING

GRAPHIC SCALE
-8' 0' 4' 8' 16'
(1" : 8'-0")

C:\Users\TSW\Desktop\work\Documents\2021 - Blossom Apartments - v20_tsw@ctengineering.com.rvt

1/21/2021 11:16:34 AM

CT ENGINEERING INC.
Structural Engineers
160 Nickerson Street Suite 302 Seattle, WA 98109
206.285.4512 (V) 206.285.0618 (F)
www.ctengineering.com

01.21.2021

No.	REVISION	DATE

JOB #: 20021
ENG: TSW
CAD: TSW
SCALE: As indicated
KEY ISSUE DATES:
PERMIT: 01.21.2021

FOR PERMIT

Level 7 Floor Framing Plan
BLOSSOM APARTMENTS
214-220 5th Avenue S
Seattle, WA 98104

S2.11

Bearing Wall Stud Schedule

WALL TYPE	LEVEL ABOVE PT DECK	PLATE SIZE	RIM / BLOCKING	STUD SIZE AND SPACING
EXTERIOR 2X6	PENTHOUSE L4-ROOF L3	2 X 6 2 X 6 2 X 6		2 X 6 AT 16" O.C. 2 X 6 AT 16" O.C. (2)2 X 6 AT 16" O.C.
PARTY WALL (STAGGERED)	PENTHOUSE ROOF L5-L8 L3-L4	2 X 8 2 X 8 2 X 8 2 X 8		2 X 4 AT 16" O.C. EACH SIDE 2 X 4 AT 16" O.C. EACH SIDE 2 X 4 AT 16" O.C. EACH SIDE (2) 2 X 4 AT 16" O.C. EACH SIDE
CORRIDOR WALL	PENTHOUSE L4-ROOF L3	2 X 6 2 X 6 2 X 6		2 X 6 AT 16" O.C. 2 X 6 AT 16" O.C. (2)2 X 6 AT 16" O.C.
STAIR WALL FIRE WALL ELEVATOR WALL	PENTHOUSE ROOF L4-ROOF L3	2 X 6 2 X 6 2 X 6 2 X 6		2 X 6 AT 16" O.C. 2 X 4 AT 16" O.C. 2 X 6 AT 16" O.C. (2)2 X 6 AT 16" O.C.
INTERIOR 2X4	PENTHOUSE ROOF L5-L8 L3-L4	2 X 4 2 X 4 2 X 4 2 X 4		2 X 4 AT 16" O.C. 2 X 4 AT 16" O.C. 2 X 4 AT 16" O.C. (2) 2 X 4 AT 16" O.C.

BEARING WALL NOTES
1. SEE SHEARWALL PLAN SHEET S2.04 AND SHEARWALL SCHEDULE SHEET S1.20 FOR WALL SHEATHING, ADDITIONAL PLATE AND STUD REQUIREMENTS, BLOCKING AND PLATE NAILING. SEE SAWN LUMBER STRUCTURAL NOTES SHEET S1.02 FOR SPECIES AND GRADE OF WALL PLATES AND STUD
2. SECURE SILL PLATES TO CONCRETE WITH 5/8" DIA. X 10" LONG ANCHOR BOLTS WITH 7" EMBED. AT 48" ON CENTER TYPICAL UNLESS NOTED OTHERWISE. REFER TO SHEET S2.04 AND SHEARWALL AND HOLDOWN SCHEDULE SHEET S1.20 AND S1.30 FOR ADDITIONAL ANCHOR BOLT REQUIREMENTS. WHERE FRTW OR PRESERVATIVE TREATED WOOD IS USED, REFER TO THAT NOTE SECTION FOR CORROSION PROTECTION REQUIREMENTS FOR CONNECTORS.
3. SEE DETAIL 2/S9.10 FOR TOP PLATE SPLICE. PROVIDE ADDITIONAL CONNECTORS AT SHEARWALLS AS INDICATED ON THE PLANS.
4. PROVIDE (1) ADDITIONAL STUD X SPACING PER BEARING WALL SCHEDULE. TYPICAL AT ALL WALL DIRECTLY BELOW THE ROOF DECK. TYPICAL PT SLAB TO ROOF.

Floor Joist Schedule

		CLEAR SPAN	D	L	PART.	PRO	11 7/8" JOIST
RESIDENTIAL	J1	UP TO 14'-0"	25	40	10	50	TJI 210 AT 16" O.C.
	J2	14'-1" TO 16'-6"	25	40	10	50	TJI 230 AT 16" O.C.
COMMON AREAS							

W_{DL} = RE: SCHEDULE
W_{LL} = RE: SCHEDULE

JOIST MANUFACTURER SHALL PROVIDE LAYOUT DRAWING FOR APPROVAL. "PRO" INDICATES DESIRED TJI-PRO RATING SYSTEM VALUE, AND SUBSTITUTIONS SHALL FURNISH EVIDENCE OF EQUIVALENT FLOOR STIFFNESS THAT MY BE GREATER THAN THAT REQUIRED BY CODE.

NOTE:
RE: ARCHITECTURAL REFLECTED CEILING PLANS FOR DROPPED CEILINGS WHICH REQUIRE DEEPER TJI JOISTS OF SAME SERIES.

Wood Beam Schedule

MARK	SIZE	POST TYPE
XX-1	4 X 8 DF#2	A
XX-2	5 1/2 X 7 1/2 GLB	B
XX-3	5 1/4 X 5 1/4 PSL	C
XX-4	1 1/2 X 9 1/2 LSL	B
XX-5	(2) 1 3/4 X 9 1/2 LSL	B

Wood Beam Schedule

MARK	SIZE	POST TYPE
XX-6	(2) 1 3/4 X 11 7/8 LSL	B
XX-7	3 1/2 X 9 1/2 PSL	C
XX-8	5 1/4 X 9 1/2 PSL	D
XX-9	7 X 9 1/2 PSL	D

Wood Post Schedule

LEVEL ABOVE PT DECK	TYPE A		TYPE B		TYPE C		TYPE D		TYPE E	TYPE F	TYPE G	TYPE H
	2X4 PL.	2X6 PL.	2X4 PL.	2X6 PL.	2X4 PL.	2X6 PL.	2X4 PL.	2X6 PL.	2X6 PL.	2X6 PL.	2X6 PL.	2X4 PL.
6	(2)2X4	(2)2X6	(2)2X4	(2)2X6	(2)2X4	(2)2X6	(2)2X4	(2)2X6		4X6	4X6	-
5	(2)2X4	(2)2X6	(2)2X4	(2)2X6	(2)2X4	(2)2X6	(2)2X4	(2)2X6		4X6	4X6	-
4	(3)2X4	(2)2X6	(3)2X4	(2)2X6	(4)2X4	(3)2X6	(4)2X4	(4)2X6		4X6	4X6	-
3	(3)2X4	(3)2X6	(3)2X4	(3)2X6	(4)2X4	(3)2X6	4X6	(4)2X6	(3)2X6	6X6	6X6	(4)2X4
2	(4)2X4	(3)2X6	(5)2X4	(4)2X6	(5)2X4	(4)2X6	4X8	6X8	(4)2X6	6X6	6X6	(8)2X4
1	(5)2X4	(4)2X6	(6)2X4	(5)2X6	4X8	(5)2X6	4X8	6X8	(4)2X6	6X8	8X6	3" PIPE

WOOD POST SCHEDULE NOTES
1. STUDS, PLATES AND GENERAL FRAMING SHALL BE DOUG FIR.
2. 4X AND 6X POSTS SHALL BE DOUG FIR NO. 2 WITH DOUG FIR PLATES.
3. RE: FOR TYPICAL BUNDLED STUD AND BLOCKING DETAILS
4. POSTS NOT CALLED OUT SHALL CONFORM TO TYPE A MINIMUM.
5. WOOD POST SCHEDULE IS TYPICAL, U.N.O. ON PLANS.

Framing Legend

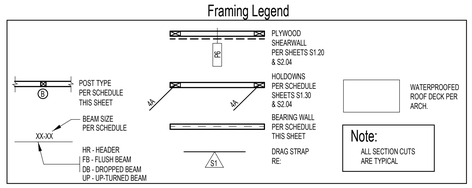

Floor Framing Notes

1. FLOOR FRAMING - 11 7/8" DEEP TJI, RE: FLOOR JOIST SCHEDULE. TYPICAL UNLESS NOTED OTHERWISE. RE: S/S9.10 FOR JOIST HANGERS AT FLUSH FRAMING CONDITIONS. SECURE JOIST TO TOP PLATES WITH (2) 8d NAILS. JOISTS UNDER AND PARALLEL TO BEARING AND SHEARWALLS SHALL BE DOUBLED TYPICAL UNLESS NOTED OTHERWISE BLOCKING AT BEARING AND SHEARWALLS SHALL BE PER BEARING AND SHEARWALL SCHEDULE. FLOOR SHEATHING SHALL BE GLUED AND NAILED.
2. WALLS INDICATED ARE BELOW THE FRAMING LEVEL ARE SHOWN SOLID. WALLS ABOVE ARE SHOWN HALFTONE. RE: BEARING WALL SCHEDULE THIS SHEET.
3. PLUMBING, MECHANICAL, AND ELECTRICAL SYSTEMS SHALL BE DESIGNED AND BUILT TO ACCOMMODATE 3/8" PER FLOOR WOOD SHRINKAGE.
4. RE: DETAIL 1/S9.10 FOR TYPICAL HEADER/BUNDLED STUD CONSTRUCTION.
5. SEE ARCHITECTURAL FOR DRAFTSTOP AND VENTING LOCATIONS AND WATERPROOFING.
6. FRAMING MEMBERS AND SHEATHING SHALL BE OF SIZE AND TYPE PER PLAN AND STRUCTURAL NOTES SHEET S1.02.
7. SOME SHEARWALLS REQUIRE 3X FRAMING AT PANEL EDGES. SEE SHEARWALL SCHEDULE ON SHEET S1.20
8. HANGERS INDICATED ARE AS MANUFACTURED BY SIMPSON STRONG-TIE. RE: SHEET S9.20 FOR BEAM HANGER SCHEDULE.
9. PROVIDE JOIST OR BLOCKING ATOP AND ALIGNING WITH ALL SHEARWALLS. RE: PLAN AND SHEET S9.20. AND DETAILS S1.20.
10. SEE ARCHITECTURAL DRAWINGS FOR DIMENSIONS AND TOP PLATE ELEVATIONS.
11. BUNDLED STUDS FROM THIS LEVEL SHALL BE CONTINUED DOWN TO LEVEL 2 PT SLAB OR SUPPORTING BEAM.
12. ALL HEADERS SHALL HAVE A MINIMUM OF (1) FULL HEIGHT STUD AT EACH END FOR BRACING TYPICAL UNLESS NOTED OTHERWISE. RE: 1/S9.10.
13. PROVIDE MINIMUM (2) 2X BUNDLED STUDS UNDER EACH BEAM END, TYPICAL UNLESS NOTED OTHERWISE. RE: 1/S9.10.
14. SEE DETAILS 11 & 12/S9.10 FOR TYPICAL CORNER FRAMING DETAILS.
15. SEE SHEET S8.01 FOR TYPICAL ELEVATOR DIVIDER BEAM AND ELEVATOR RAIL MOUNTING PLATES.
16. AT BRICK VENEER, RE: DETAILS 18 & 19/S9.10 AND STRUCTURAL NOTES.

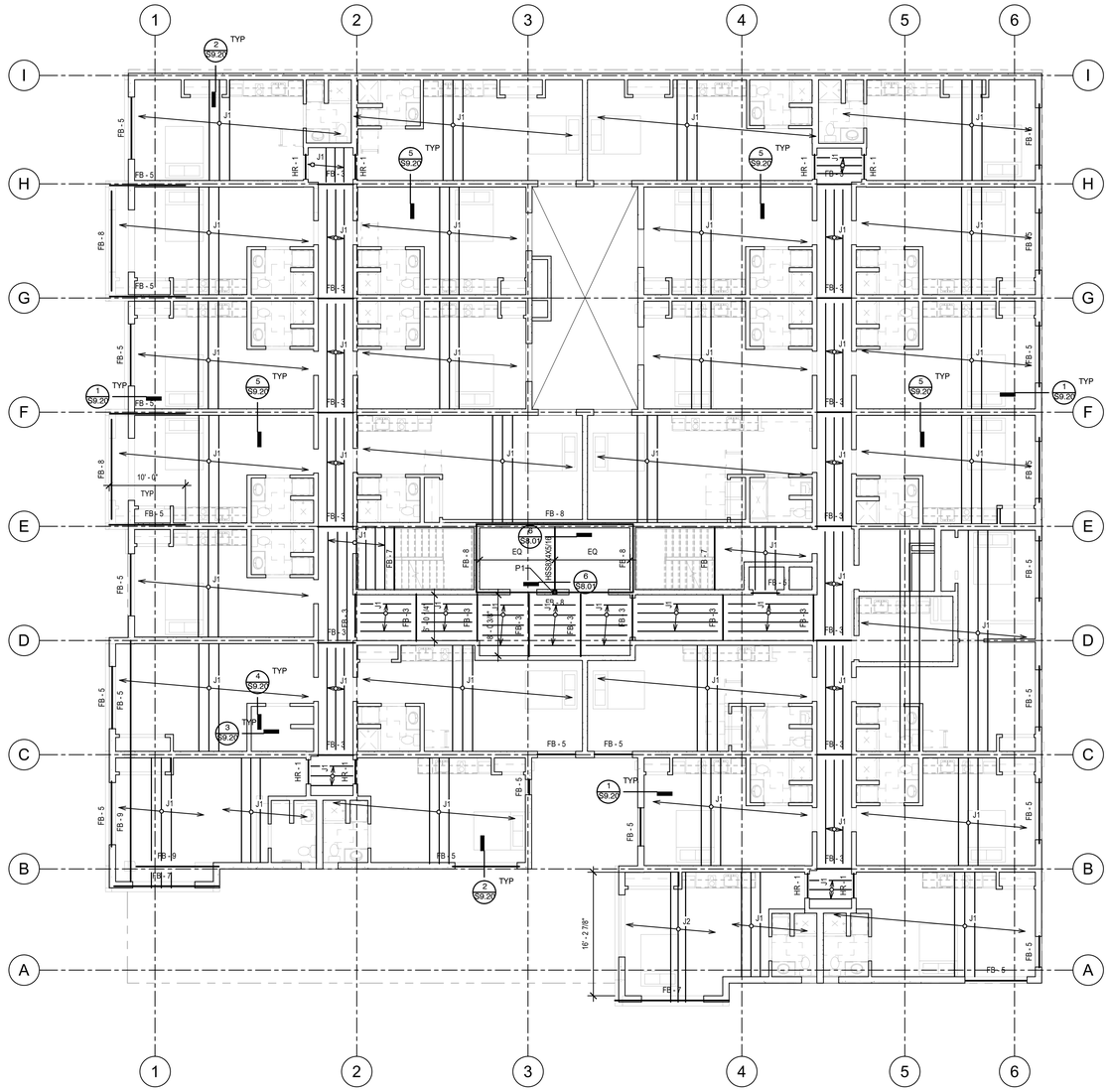

SCALE: 1/8" = 1'-0"
1
LEVEL 8 FLOOR FRAMING

GRAPHIC SCALE
-8' 0' 4' 8' 16'
(1" : 8'-0")

CT ENGINEERING INC.
Structural Engineers
160 Nickerson Street Suite 302 Seattle, WA 98109
206.285.4512 (V) 206.285.0618 (F)
www.ctengineering.com

01.21.2021

No.	REVISION	DATE

JOB #: 20021
ENG: TSW
CAD: TSW
SCALE: As indicated
KEY ISSUE DATES:
PERMIT: 01.21.2021

FOR PERMIT

Level 8 Floor Framing Plan
BLOSSOM APARTMENTS
214-220 5th Avenue S
Seattle, WA 98104

S2.12

C:\Users\TSwindsor\work\Documents\2021 - Blossom Apartments - v20_tsWindsor@ctengineering.com.rvt
1/21/2021 11:16:39 AM

Bearing Wall Stud Schedule

WALL TYPE	LEVEL ABOVE PT DECK	PLATE SIZE	STUD SIZE AND SPACING
EXTERIOR 2X6	L2-UPPER ROOF	2 X 6	2 X 6
PARTY WALL (STAGGERED)	L5-ROOF L2-L5	2 X 8 2 X 8	2 X 4 AT 16" O.C. EACH SIDE (2) 2 X 4 AT 16" O.C. EACH SIDE
CORRIDOR WALL	L3-UPPER ROOF L2-L3	2 X 6 2 X 6	2 X 6 AT 16" O.C. (2) 2 X 6 AT 16" O.C.
STAIR WALL FIRE WALL ELEVATOR WALL	L3-UPPER ROOF L2-L3	2 X 6 2 X 6	2 X 6 AT 16" O.C. 2 X 6 AT 12" O.C.
INTERIOR 2X4	L6-UPPER ROOF L4-L6 L2-L4	2 X 4 2 X 4 2 X 4	2 X 4 AT 12" O.C. (2) 2 X 4 AT 16" O.C. (3) 2 X 4 AT 16" O.C.

BEARING WALL NOTES
1. SEE SHEARWALL PLAN SHEET S2.04 AND SHEARWALL SCHEDULE SHEET S1.20 FOR WALL SHEATHING, ADDITIONAL PLATE AND STUD REQUIREMENTS, BLOCKING AND PLATE NAILING. SEE SAWN LUMBER STRUCTURAL NOTES SHEET S1.02 FOR SPECIES AND GRADE OF WALL PLATES AND STUD
2. SECURE SILL PLATES TO CONCRETE WITH 5/8" DIA. X 10" LONG ANCHOR BOLTS WITH 7" EMBED. AT 48" ON CENTER TYPICAL UNLESS NOTED OTHERWISE. REFER TO SHEET S2.04 AND SHEARWALL AND HOLDOWN SCHEDULE SHEET S1.20 AND S1.30 FOR ADDITIONAL ANCHOR BOLT REQUIREMENTS. WHERE FRTW OR PRESERVATIVE TREATED WOOD IS USED, REFER TO THAT NOTE SECTION FOR CORROSION PROTECTION REQUIREMENTS FOR CONNECTORS.
3. SEE DETAIL 2/S9.10 FOR TOP PLATE SPLICE. PROVIDE ADDITIONAL CONNECTORS AT SHEARWALLS AS INDICATED ON THE PLANS.
4. PROVIDE (1) ADDITIONAL STUD X SPACING PER BEARING WALL SCHEDULE. TYPICAL AT ALL WALL DIRECTLY BELOW THE BOILER ROOM. TYPICAL PT SLAB TO ROOF.

Roof Joist Schedule

		CLEAR SPAN	D	L	PART.	PRO	11 7/8" JOIST
ROOF	RJ1	UP TO 14'-0"	25	25	--	--	TJI 210 AT 24" O.C.
	RJ2	14'-1" TO 16'-0"	25	25	--	--	TJI 230 AT 24" O.C.
	RJ7	14'-1" TO 16'-0"	25★★	25	--	--	(2) TJI 230 AT 12" O.C. (NO VENT PENETRATIONS)
	RJ8	UP TO 12'-0"	525★★★	200	--	--	(2) 1 3/4 X 11 7/8 LVL AT 12" O.C.
ROOF DECK & GREEN ROOF	RJ3	UP TO 14'-0"	60	100	__	--	(2) TJI 210 AT 16" O.C.
	RJ4	14'-1" TO 16'-0"	60	100	--	--	(2) TJI 230 AT 16" O.C.
	RJ5	16'-1" TO 20'-0"	60	100	--	--	(2) TJI 230 AT 12" O.C.
HIGH ROOF		CLEAR SPAN	D	L	PART.	PRO	14" TJI 210 AT 24" O.C.
	RJ6	UP TO 16'-0"	27★	25	--	--	14" TJI 210 AT 24" O.C.
L6	RJ9	UP TO 6'-0"	60	60	0	--	P.T. 2X10 T./SLOPED TO DRAIN (MIN. DEPTH = 7 1/2")

W_{DL} = RE: SCHEDULE
W_{LL} = RE: SCHEDULE

JOIST MANUFACTURER SHALL PROVIDE LAYOUT DRAWING FOR APPROVAL
"PRO" INDICATES DESIRED TJI-PRO RATING SYSTEM VALUE, AND SUBSTITUTIONS SHALL FURNISH EVIDENCE OF EQUIVALENT FLOOR STIFFNESS THAT MY BE GREATER THAN THAT REQUIRED BY CODE.

★ RJ6 DEAD LOAD INCLUDES AN ALLOWANCE OF 7 PSF FOR FUTURE PV PANELS. RE: ARCH.

★★ RJ7 DESIGN SHALL ADD ALLOWANCE FOR RTU CONDENSERS. RE: PLAN & MECH. RTU SCHEDULE S4.01.

★★★ RJ8 DEAD LOAD INCLUDES ALLOWANCE FOR 4" HIGH X 42" X 36"CONCRETE HOUSEKEEPING PADS PER WATER TANK.

NOTE:
RE: ARCHITECTURAL REFLECTED CEILING PLANS FOR DROPPED CEILINGS WHICH REQUIRE DEEPER TJI JOISTS OF SAME SERIES.

NOTE:
RE: PLANS FOR ADDITIONAL SOIL, PLANTING, PLANTERS, DECKS, ETC, ROOF LOADING.

Wood Beam Schedule

MARK	SIZE	POST TYPE
XX-1	4 X 8 DF#2	A
XX-2	5 1/2 X 7 1/2 GLB	B
XX-3	5 1/4 X 5 1/4 PSL	C
XX-4	1 1/2 X 9 1/2 LSL	B
XX-5	(2) 1 3/4 X 9 1/2 LSL	B

Wood Beam Schedule

MARK	SIZE	POST TYPE
XX-6	(2) 1 3/4 X 11 7/8 LSL	B
XX-7	3 1/2 X 9 1/2 PSL	C
XX-8	5 1/4 X 9 1/2 PSL	D
XX-9	7 X 9 1/2 PSL	D

Framing Legend

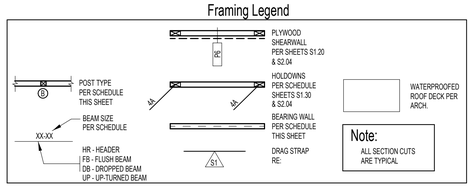

Note:
ALL SECTION CUTS ARE TYPICAL

Wood Post Schedule

LEVEL ABOVE PT DECK	TYPE A		TYPE B		TYPE C		TYPE D		TYPE E	TYPE F	TYPE G	TYPE H
	2X4 PL.	2X6 PL.	2X4 PL.	2X6 PL.	2X4 PL.	2X6 PL.	2X4 PL.	2X6 PL.	2X6 PL.	2X6 PL.	2X6 PL.	2X4 PL.
5	(2)2X4	(2)2X6	(2)2X4	(2)2X6	(2)2X4	(2)2X6	(2)2X4	(2)2X6		4X6	4X6	-
4	(2)2X4	(2)2X6	(2)2X4	(2)2X6	(2)2X4	(2)2X6	(2)2X4	(3)2X6		4X6	4X6	-
3	(2)2X4	(2)2X6	(3)2X4	(3)2X6	(3)2X4	(3)2X6	4X6	(4)2X6	(3)2X6	6X6	6X6	(4)2X4
2	(2)2X4	(2)2X6	(4)2X4	(3)2X6	(4)2X4	(3)2X6	4X8	6X6	(3)2X6	6X6	6X6	(8)2X4
1	(4)2X4	(3)2X6	(5)2X4	(4)2X6	4X8	(4)2X6	4X8	6X8	(4)2X6	6X8	8X6	3" PIPE

WOOD POST SCHEDULE NOTES
1. STUDS, PLATES AND GENERAL FRAMING SHALL BE DOUG FIR.
2. 4X AND 6X POSTS SHALL BE DOUG FIR NO. 2 WITH DOUG FIR PLATES.
3. RE: FOR TYPICAL BUNDLED STUD AND BLOCKING DETAILS
4. POSTS NOT CALLED OUT SHALL CONFORM TO MINIMUM.
5. WOOD POST SCHEDULE IS TYPICAL, U.N.O. ON PLANS.

Roof Framing Notes

1. ROOF FRAMING - FRAMING AS NOTED AT 16" O.C. TYPICAL UNLESS NOTED OTHERWISE AND ADDITIONAL FRAMING AS SHOWN ON THE ROOF FRAMING PLAN. SEE SHEET S1.01 AND S1.02 AND THIS PLAN FOR ROOF LOADS.
2. ROOF DECK FRAMING - RE: PLAN AND SCHEDULE FOR JOISTS. RE: STRUCTURAL NOTES FOR 3/4" PLYWOOD SHEATHING. RE: ARCHITECT FOR INSULATION, WATERPROOFING AND PAVERS, TYPICAL.
3. FLOOR FRAMING - 11 7/8" DEEP TJI, RE: FLOOR JOIST SCHEDULE, TYPICAL UNLESS NOTED OTHERWISE. RE: 6/S9.10 FOR JOIST HANGERS AT FLUSH FRAMING CONDITIONS. SECURE JOIST TO TOP PLATES WITH (2) 8d NAILS. JOISTS UNDER AND PARALLEL TO BEARING AND SHEARWALLS SHALL BE DOUBLED TYPICAL UNLESS NOTED OTHERWISE BLOCKING AT BEARING AND SHEARWALLS SHALL BE PER BEARING AND SHEARWALL SCHEDULE. FLOOR SHEATHING SHALL BE GLUED AND NAILED.
4. WALLS INDICATED ARE BELOW THE FRAMING LEVEL ARE SHOWN SOLID. WALLS ABOVE ARE SHOWN HALFTONE. RE: BEARING WALL SCHEDULE THIS SHEET.
5. PLUMBING, MECHANICAL, AND ELECTRICAL SYSTEMS SHALL BE DESIGNED AND BUILT TO ACCOMMODATE 3/8" PER FLOOR WOOD SHRINKAGE.
6. RE: DETAIL 1/S9.10 FOR TYPICAL HEADER/BUNDLED STUD CONSTRUCTION.
7. SEE ARCHITECTURAL FOR DRAFTSTOP AND VENTING LOCATIONS AND WATERPROOFING.
8. FRAMING MEMBERS AND SHEATHING SHALL BE OF SIZE AND TYPE PER PLAN AND STRUCTURAL NOTES SHEET S1.02.
9. SOME SHEARWALLS REQUIRE 3X FRAMING AT PANEL EDGES. SEE SHEARWALL SCHEDULE ON SHEET S1.20
10. HANGERS INDICATED ARE AS MANUFACTURED BY SIMPSON STRONG-TIE. RE: SHEET S9.00 FOR BEAM HANGER SCHEDULE.
11. PROVIDE JOIST OR BLOCKING ATOP SHEARWALLS. RE: PLAN AND SHEET S9.02. SEE ARCHITECTURAL DRAWINGS FOR DIMENSIONS AND TOP PLATE ELEVATIONS.
12. BUNDLED STUDS FROM THIS LEVEL SHALL BE CONTINUED DOWN TO LEVEL 2 PT SLAB OR SUPPORTING BEAM
13. ALL HEADERS SHALL HAVE A MINIMUM OF (1) FULL HEIGHT STUD AT EACH END FOR BRACING TYPICAL UNLESS NOTED OTHERWISE. RE: 1/S9.10
14. PROVIDE MINIMUM (2) 2X BUNDLED STUDS UNDER EACH BEAM END, TYPICAL UNLESS NOTED OTHERWISE. RE: 1/S9.10.
15. SEE DETAILS ON SHEET 1/S9.10 FOR TYPICAL CORNER FRAMING DETAILS.
16. RE: DETAILS S9.XX AT ALL ROOF TOP UNITS (RTU). PROVIDE FLUSH BEAMS AND 4X SOLID BLOCKING UNDER AT RTU CURBS. FIELD VERIFY EXACT LOCATIONS WITH MECHANICAL, TYPICAL.
17. SEE SHEET S8.01 FOR TYPICAL ELEVATOR DIVIDER BEAM AND ELEVATOR RAIL MOUNTING PLATES.

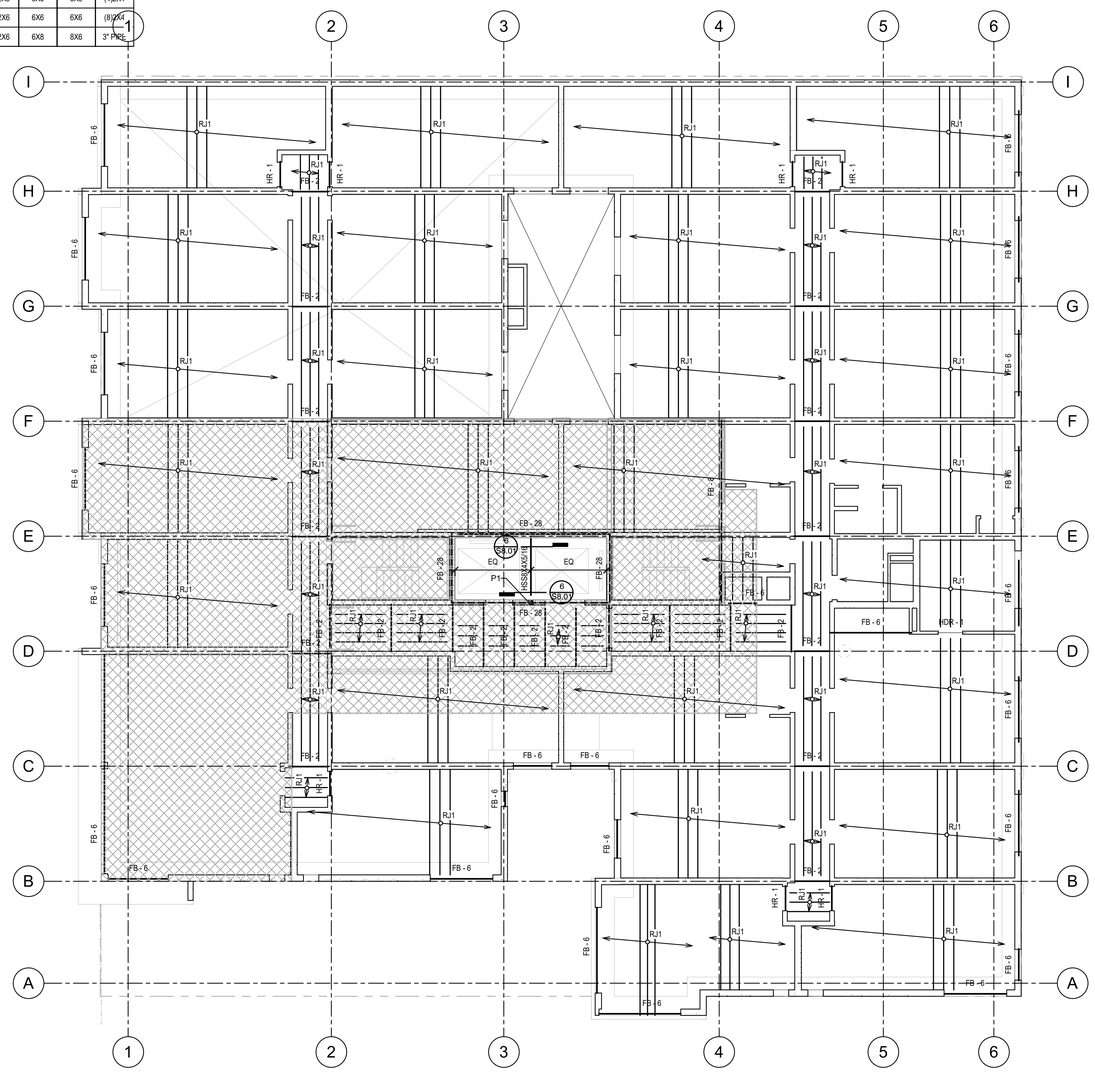

SCALE: 1/8" = 1'-0"
1 ROOF FRAMING PLAN

GRAPHIC SCALE
-8' 0' 4' 8' 16'
(1" : 8'-0")

C:\Users\TWendschander\Documents\20021 - Blossom Apartments - v20_NewerBuildingVersion.rvt

1/21/2021 11:16:43 AM

CT ENGINEERING INC.
Structural Engineers
180 Nickerson Street Suite 302 Seattle, WA 98109
206.282.4512 (V) 206.285.0618 (F)
www.ctengineering.com

01.21.2021

No.	REVISION	DATE

JOB #: 20021
ENG: TSW
CAD: TSW
SCALE: As indicated
KEY ISSUE DATES:
PERMIT: 01.21.2021

FOR PERMIT

Roof Framing Plan
BLOSSOM APARTMENTS
214-220 5th Avenue S
Seattle, WA 98104

S2.13

Bearing Wall Stud Schedule

WALL TYPE	LEVEL ABOVE PT DECK	PLATE SIZE	STUD SIZE AND SPACING
EXTERIOR 2X6	L2-UPPER ROOF	2 X 6	2 X 6
PARTY WALL (STAGGERED)	L5-ROOF L2-L5	2 X 8 2 X 8	2 X 4 AT 16" O.C. EACH SIDE (2) 2 X 4 AT 16" O.C. EACH SIDE
CORRIDOR WALL	L3-UPPER ROOF L2-L3	2 X 6 2 X 6	2 X 6 AT 16" O.C. (2) 2 X 6 AT 16" O.C.
STAIR WALL FIRE WALL ELEVATOR WALL	L3-UPPER ROOF L2-L3	2 X 6 2 X 6	2 X 6 AT 16" O.C. 2 X 6 AT 12" O.C.
INTERIOR 2X4	L6-UPPER ROOF L4-L6 L2-L4	2 X 4 2 X 4 2 X 4	2 X 4 AT 12" O.C. (2) 2 X 4 AT 16" O.C. (3) 2 X 4 AT 16" O.C.

BEARING WALL NOTES
1. SEE SHEARWALL PLAN SHEET S2.04 AND SHEARWALL SCHEDULE SHEET S1.20 FOR WALL SHEATHING, ADDITIONAL PLATE AND STUD REQUIREMENTS, BLOCKING AND PLATE NAILING. SEE SAWN LUMBER STRUCTURAL NOTES SHEET S1.02 FOR SPECIES AND GRADE OF WALL PLATES AND STUD
2. SECURE SILL PLATES TO CONCRETE WITH 5/8" DIA. X 10" LONG ANCHOR BOLTS WITH 7" EMBED. AT 48" ON CENTER TYPICAL UNLESS NOTED OTHERWISE. REFER TO SHEET S2.04 AND SHEARWALL AND HOLDOWN SCHEDULE SHEET S1.20 AND S1.30 FOR ADDITIONAL ANCHOR BOLT REQUIREMENTS. WHERE FRTW OR PRESERVATIVE TREATED WOOD IS USED, REFER TO THAT NOTE SECTION FOR CORROSION PROTECTION REQUIREMENTS FOR CONNECTORS.
3. SEE DETAIL 2/S9.10 FOR TOP PLATE SPLICE. PROVIDE ADDITIONAL CONNECTORS AT SHEARWALLS AS INDICATED ON THE PLANS.
4. PROVIDE (1) ADDITIONAL STUD X SPACING PER BEARING WALL SCHEDULE. TYPICAL AT ALL WALL DIRECTLY BELOW THE BOILER ROOM. TYPICAL PT SLAB TO ROOF.

Roof Joist Schedule

		CLEAR SPAN	D	L	PART.	PRO	11 7/8" JOIST
ROOF	RJ1	UP TO 14'-0"	25	25	--	--	TJI 210 AT 24" O.C.
	RJ2	14'-1" TO 16'-0"	25	25	--	--	TJI 230 AT 24" O.C.
	RJ7	14'-1" TO 16'-0"	25★★	25	--	--	(2) TJI 230 AT 12" O.C. (NO VENT PENETRATIONS)
	RJ8	UP TO 12'-0"	525★★★	200	--	--	(2) 1 3/4 X 11 7/8 LVL AT 12" O.C.
ROOF DECK & GREEN ROOF	RJ3	UP TO 14'-0"	60	100	--	--	(2) TJI 210 AT 16" O.C.
	RJ4	14'-1" TO 16'-0"	60	100	--	--	(2) TJI 230 AT 16" O.C.
	RJ5	16'-1" TO 20'-0"	60	100	--	--	(2) TJI 230 AT 12" O.C.
HIGH ROOF		CLEAR SPAN	D	L	PART.	PRO	14" TJI 210 AT 24" O.C.
	RJ6	UP TO 16'-0"	27★	25	--	--	14" TJI 210 AT 24" O.C.
L6	RJ9	UP TO 6'-0"	60	60	0	--	P.T. 2X10 T.&GLOPED TO DRAIN (MIN. DEPTH = 7 1/2")

W_{DL} = RE: SCHEDULE
W_{LL} = RE: SCHEDULE

JOIST MANUFACTURER SHALL PROVIDE LAYOUT DRAWING FOR APPROVAL. "PRO" INDICATES DESIRED TJI-PRO RATING SYSTEM VALUE. AND SUBSTITUTIONS SHALL FURNISH EVIDENCE OF EQUIVALENT FLOOR STIFFNESS THAT MY BE GREATER THAN THAT REQUIRED BY CODE.

★ RJ6 DEAD LOAD INCLUDES AN ALLOWANCE OF 7 PSF FOR FUTURE PV PANELS. RE: ARCH.

★★ RJ7 DESIGN SHALL ADD ALLOWANCE FOR RTU CONDENSERS. RE: PLAN & MECH. RTU SCHEDULE S4.01.

★★★ RJ8 DEAD LOAD INCLUDES ALLOWANCE FOR 4" HIGH X 42" X 36"CONCRETE HOUSEKEEPING PADS PER WATER TANK.

NOTE:
RE: ARCHITECTURAL REFLECTED CEILING PLANS FOR DROPPED CEILINGS WHICH REQUIRE DEEPER TJI JOISTS OF SAME SERIES.

NOTE:
RE: PLANS FOR ADDITIONAL SOIL, PLANTING, PLANTERS, DECKS, ETC, ROOF LOADING.

Framing Legend

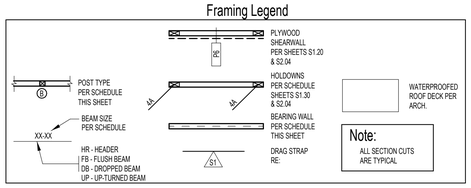

Wood Post Schedule

LEVEL ABOVE PT DECK	TYPE A		TYPE B		TYPE C		TYPE D		TYPE E	TYPE F	TYPE G	TYPE H
	2X4 PL.	2X6 PL.	2X4 PL.	2X6 PL.	2X4 PL.	2X6 PL.	2X4 PL.	2X6 PL.	2X6 PL.	2X6 PL.	2X6 PL.	2X4 PL.
5	(2)2X4	(2)2X6	(2)2X4	(2)2X6	(2)2X4	(2)2X6	(2)2X4	(2)2X6		4X6	4X6	-
4	(2)2X4	(2)2X6	(2)2X4	(2)2X6	(2)2X4	(2)2X6	(2)2X4	(3)2X6		4X6	4X6	-
3	(2)2X4	(2)2X6	(3)2X4	(3)2X6	(3)2X4	(3)2X6	4X6	(4)2X6	(3)2X6	6X6	6X6	(4)2X4
2	(2)2X4	(2)2X6	(4)2X4	(3)2X6	(4)2X4	(3)2X6	4X8	6X6	(3)2X6	6X6	6X6	(8)2X4
1	(4)2X4	(3)2X6	(5)2X4	(4)2X6	4X8	(4)2X6	4X8	6X8	(4)2X6	6X8	8X6	3" PIPE

WOOD POST SCHEDULE NOTES
1. STUDS, PLATES AND GENERAL FRAMING SHALL BE DOUG FIR.
2. 4X AND 6X POSTS SHALL BE DOUG FIR NO. 2 WITH DOUG FIR PLATES.
3. RE: FOR TYPICAL BUNDLED STUD AND BLOCKING DETAILS
4. POSTS NOT CALLED OUT SHALL CONFORM TO MINIMUM.
5. WOOD POST SCHEDULE IS TYPICAL, U.N.O. ON PLANS.

Roof Framing Notes

1. ROOF FRAMING - FRAMING AS NOTED AT 16" O.C. TYPICAL UNLESS NOTED OTHERWISE AND ADDITIONAL FRAMING AS SHOWN ON THE ROOF FRAMING PLAN. SEE SHEET S1.01 AND S1.02 AND THIS PLAN FOR ROOF LOADS.
2. ROOF DECK FRAMING - RE: PLAN AND SCHEDULE FOR JOISTS. RE: STRUCTURAL NOTES FOR 3/4" PLYWOOD SHEATHING. RE: ARCHITECT FOR INSULATION, WATERPROOFING AND PAVERS. TYPICAL.
3. FLOOR FRAMING - 11 7/8" DEEP TJI. RE: FLOOR JOIST SCHEDULE, TYPICAL UNLESS NOTED OTHERWISE. RE: 6/S9.10 FOR JOIST HANGERS AT FLUSH FRAMING CONDITIONS. SECURE JOIST TO TOP PLATES WITH (2) 8d NAILS. JOISTS UNDER AND PARALLEL TO BEARING AND SHEARWALLS SHALL BE DOUBLED TYPICAL UNLESS NOTED OTHERWISE BLOCKING AT BEARING AND SHEARWALLS SHALL BE PER BEARING AND SHEARWALL SCHEDULE. FLOOR SHEATHING SHALL BE GLUED AND NAILED.
4. WALLS INDICATED ARE BELOW THE FRAMING LEVEL ARE SHOWN SOLID. WALLS ABOVE ARE SHOWN HALFTONE. RE: BEARING WALL SCHEDULE THIS SHEET.
5. PLUMBING, MECHANICAL, AND ELECTRICAL SYSTEMS SHALL BE DESIGNED AND BUILT TO ACCOMMODATE 3/8" PER FLOOR WOOD SHRINKAGE.
6. RE: DETAIL 1/S9.10 FOR TYPICAL HEADER/BUNDLED STUD CONSTRUCTION.
7. SEE ARCHITECTURAL FOR DRAFTSTOP AND VENTING LOCATIONS AND WATERPROOFING.
8. FRAMING MEMBERS AND SHEATHING SHALL BE OF SIZE AND TYPE PER PLAN AND STRUCTURAL NOTES SHEET S1.02.
9. SOME SHEARWALLS REQUIRE 3X FRAMING AT PANEL EDGES. SEE SHEARWALL SCHEDULE ON SHEET S1.20
10. HANGERS INDICATED ARE AS MANUFACTURED BY SIMPSON STRONG-TIE. RE: SHEET S9.00 FOR BEAM HANGER SCHEDULE.
11. PROVIDE JOIST OR BLOCKING ATOP SHEARWALLS. RE: PLAN AND SHEET S9.02. SEE ARCHITECTURAL DRAWINGS FOR DIMENSIONS AND TOP PLATE ELEVATIONS.
12. BUNDLED STUDS FROM THIS LEVEL SHALL BE CONTINUED DOWN TO LEVEL 2 PT SLAB OR SUPPORTING BEAM.
13. ALL HEADERS SHALL HAVE A MINIMUM OF (1) FULL HEIGHT STUD AT EACH END FOR BRACING TYPICAL UNLESS NOTED OTHERWISE. RE: 1/S9.10
14. PROVIDE MINIMUM (2) 2X BUNDLED STUDS UNDER EACH BEAM END, TYPICAL UNLESS NOTED OTHERWISE. RE: 1/S9.10.
15. SEE DETAILS ON SHEET 1/S9.10 FOR TYPICAL CORNER FRAMING DETAILS.
16. RE: DETAILS S9.XX AT ALL ROOF TOP UNITS (RTU). PROVIDE FLUSH BEAMS AND 4X SOLID BLOCKING UNDER AT RTU CURBS. FIELD VERIFY EXACT LOCATIONS WITH MECHANICAL, TYPICAL.
17. SEE SHEET S8.01 FOR TYPICAL ELEVATOR DIVIDER BEAM AND ELEVATOR RAIL MOUNTING PLATES.

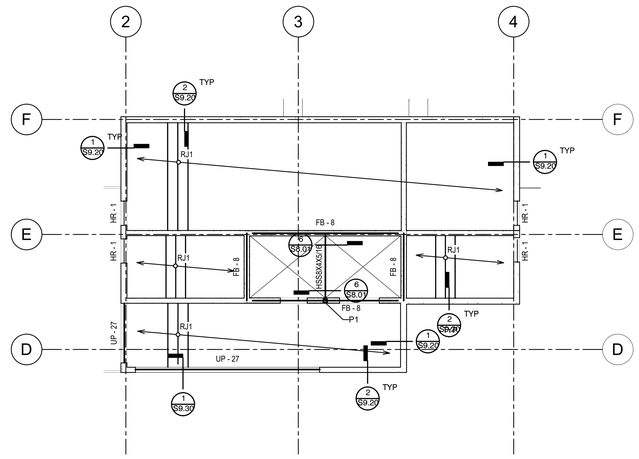

SCALE: 1/8" = 1'-0"
1 PENTHOUSE ROOF FRAMING

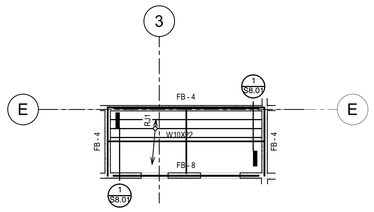

SCALE: 1/8" = 1'-0"
2 ELEVATOR ROOF FRAMING

GRAPHIC SCALE
-8' 0' 4' 8' 16'
(1" : 8'-0")

CT ENGINEERING INC.
Structural Engineers
160 Nickerson Street Suite 302 Seattle, WA 98109
206.285.4512 (V) 206.285.0618 (F)
www.ctengineering.com

01.21.2021

No.	REVISION	DATE

JOB #: 20021
ENG: TSW
CAD: TSW
SCALE: As indicated
KEY ISSUE DATES:
PERMIT: 01.21.2021

FOR PERMIT

Upper Roof Framing Plan
BLOSSOM APARTMENTS
214-220 5th Avenue S
Seattle, WA 98104

S2.14

C:\Users\TSWebster\AppData\Local\Temp\acpublish_1164\20021 - Blossom Apartments - 220 5th Ave\20021 - Blossom Apartments - 220 5th Ave.rvt

1/21/2021 11:16:45 AM

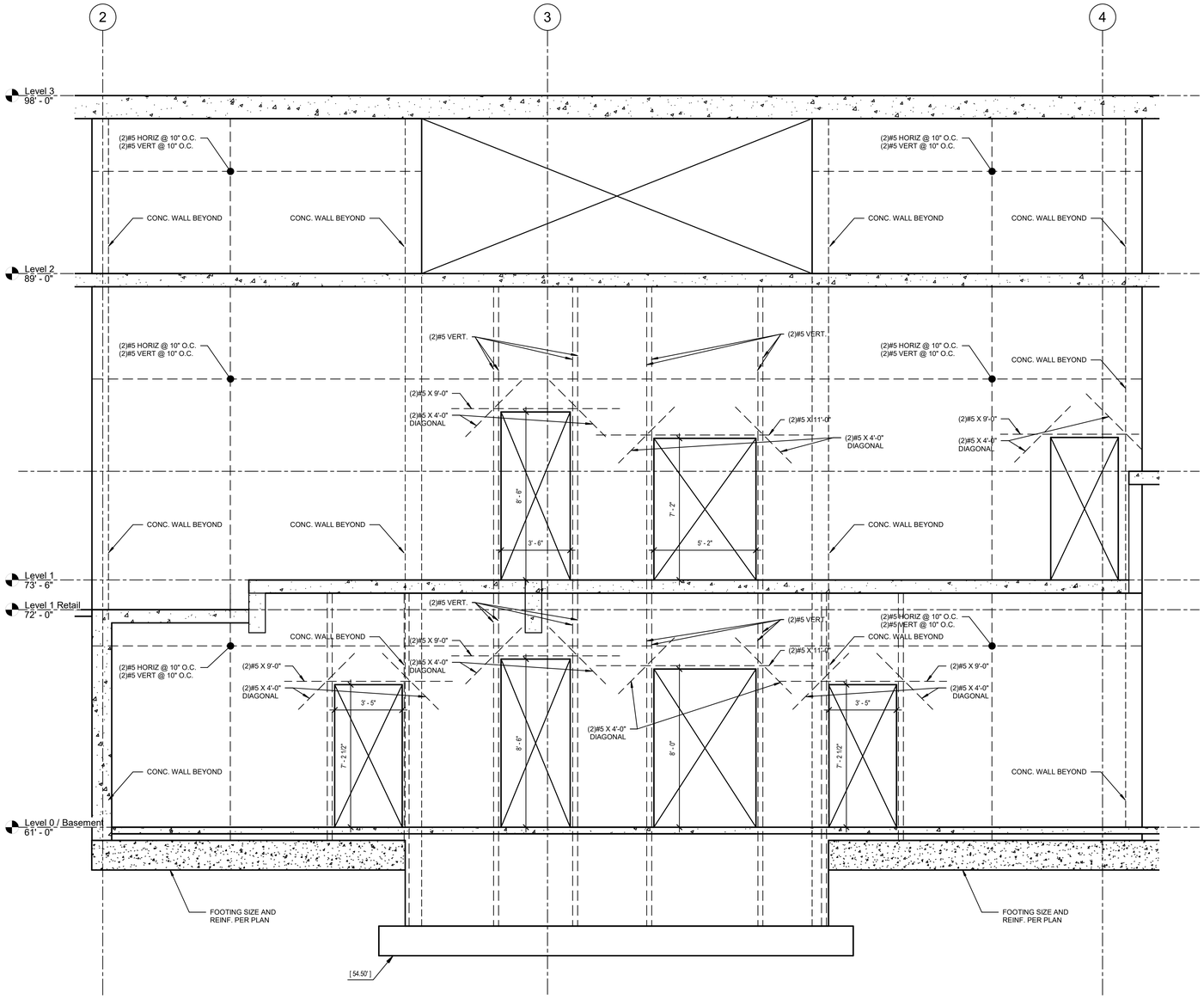

SCALE: 3/8" = 1'-0"

1 CONCRETE WALL ELEVATION

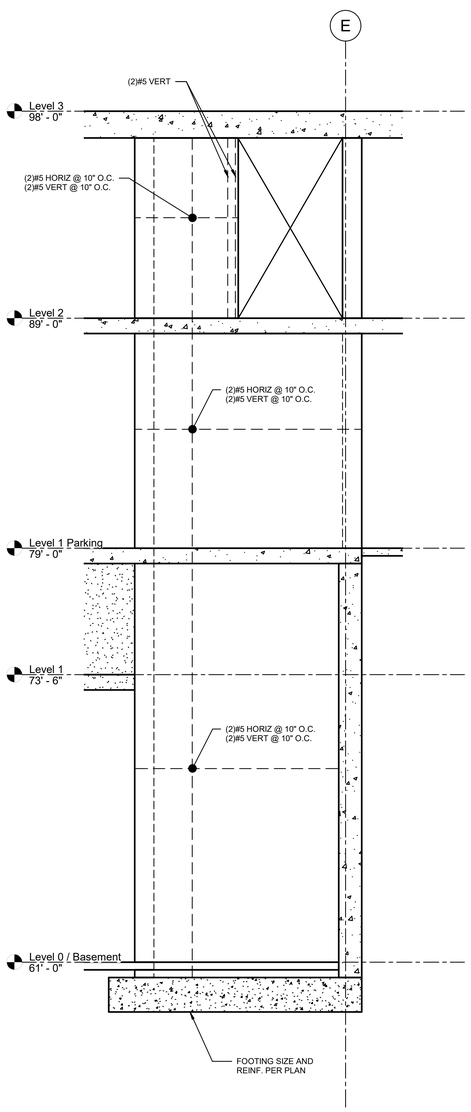

SCALE: 3/8" = 1'-0"

2 CONCRETE WALL ELEVATION

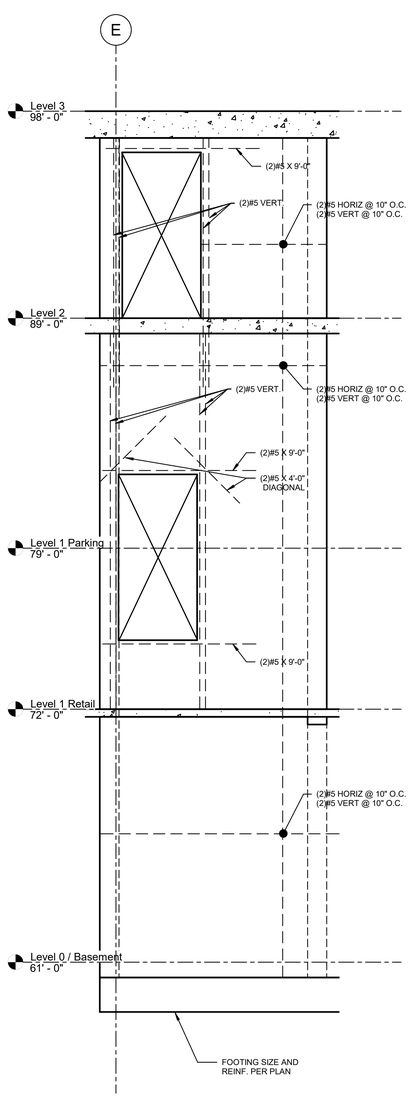

SCALE: 3/8" = 1'-0"

3 CONCRETE WALL ELEVATION

CT ENGINEERING INC.
Structural Engineers
160 Nickerson Street Suite 302 Seattle, WA 98109
206.282.4512 (V) 206.285.0618 (F)
www.ctengineering.com

01.21.2021

No.	REVISION	DATE

JOB #: 20021
ENG: TSW
CAD: TSW
SCALE: 3/8" = 1'-0"
KEY ISSUE DATES:

PERMIT: 01.21.2021

FOR PERMIT

Elevations

BLOSSOM APARTMENTS
214-220 5th Avenue S
Seattle, WA 98104

S3.01

C:\Users\TWendorf\Desktop\Documents\20021 - Blossom Apartments - v20_tsw@ctengineering.com.rvt
1/21/2021 11:16:47 AM

BAR SIZE	f'c=3000 PSI			f'c=4000 PSI			f'c=5000 PSI		
	Ld	OTHER BARS LAP SPLICE	TOP BARS LAP SPLICE	Ld	OTHER BARS LAP SPLICE	TOP BARS LAP SPLICE	Ld	OTHER BARS LAP SPLICE	TOP BARS LAP SPLICE
#3	16"	21"	28"	14"	18"	24"	13"	17"	22"
#4	22"	28"	37"	19"	25"	32"	17"	22"	29"
#5	27"	36"	46"	24"	31"	40"	21"	28"	36"
#6	33"	43"	56"	28"	37"	48"	25"	33"	43"
#7	48"	62"	81"	42"	54"	70"	37"	48"	63"
#8	55"	71"	93"	47"	62"	80"	42"	55"	72"
#9	62"	80"	104"	53"	69"	90"	48"	62"	81"
#10	68"	89"	116"	59"	77"	100"	53"	69"	90"
#11	75"	98"	127"	65"	85"	110"	58"	76"	99"

LAP SPLICE SCHEDULE NOTES:

1. TENSION LAP SPLICE SHOWN ABOVE FOR CONCRETE COVER GREATER THAN OR EQUAL TO BAR DIAMETER AND CENTER TO CENTER SPACING GREATER THAN OR EQUAL TO TWO BAR DIAMETERS (SPACING AND COVER CASE1).TENSION LAP SPLICE SHOWN ABOVE ARE CLASS B SPLICES.
2. "OTHER BARS" ARE ALL VERTICAL BARS AND HORIZONTAL BARS WITH LESS THAN 12" OF CONCRETE CAST BELOW THE BAR.
3. "TOP BARS" ARE HORIZONTAL BARS WITH MORE THAN 12" OF CONCRETE CAST BELOW THE BARS.
4. COMPRESSION LAP SPLICES SHALL BE 30 BAR DIAMETERS MIN. U.N.O. ON THE DRAWINGS
5. DEVELOPMENT LENGTH (Ld) IS "OTHER BARS", CLASS A.

SCALE: 3/4" = 1'-0"

1 TYPICAL LAP SPLICE SCHEDULE

BAR SIZE	D	STANDARD 180 DEGREE HOOK			STANDARD 90 DEGREE HOOK		
		D	A OR G	J	BAR SIZE	D	A OR G
#3	6db	2 1/4"	5"	3"	#3	2 1/4"	6"
#4	6db	3"	6"	4"	#4	3"	8"
#5	6db	3 3/4"	7"	5"	#5	3 3/4"	10"
#6	6db	4 1/2"	8"	6"	#6	4 1/2"	1'-0"
#7	6db	5 1/4"	10"	7"	#7	5 1/4"	1'-2"
#8	6db	6"	11"	8"	#8	6"	1'-4"
#9	8db	9 1/2"	1'-3"	11 3/4"	#9	9 1/2"	1'-7"
#10	8db	10 3/4"	1'-5"	1'-1 1/4"	#10	10 3/4"	1'-10"
#11	8db	12"	1'-7"	1'-2 3/4"	#11	12"	2'-0"
#14	10db	18 1/4"	2'-3"	1'-9 3/4"	#14	18 1/4"	2'-7"
#18	10db	24"	3'-0"	2'-4 1/2"	#18	24"	3'-5"

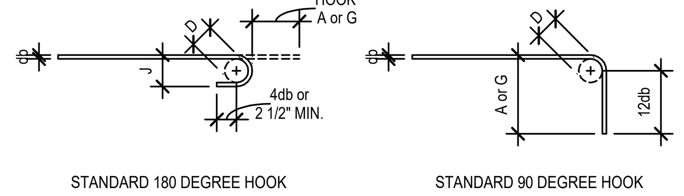

STANDARD 180 DEGREE HOOK

STANDARD 90 DEGREE HOOK

D=FINISHED INSIDE BEND DIAMETER

SCALE: 3/4" = 1'-0"

2 STANDARD HOOK DETAILS

BAR SIZE	D	D	STIRRUP HOOKS/TIES			SEISMIC STIRRUP/TIE	
			90 DEGREE	135 DEGREE		135 DEGREE SEISMIC HOOK	
			A or G	A or G	APPROX. H	A or G	APPROX. H
#3	4db	1 1/2"	4"	4"	2 1/2"	4 1/4"	3"
#4	4db	2"	4 1/2"	4 1/2"	3"	4 1/2"	3"
#5	4db	2 1/2"	6"	5 1/2"	3 3/4"	5 1/2"	3 3/4"
#6	6db	4 1/2"	1'-0"	7 3/4"	4 1/2"	7 3/4"	4 1/2"
#7	6db	5 1/4"	1'-2"	9"	5 1/4"	9"	5 1/4"
#8	6db	6"	1'-4"	10 1/4"	6"	10 1/4"	6"

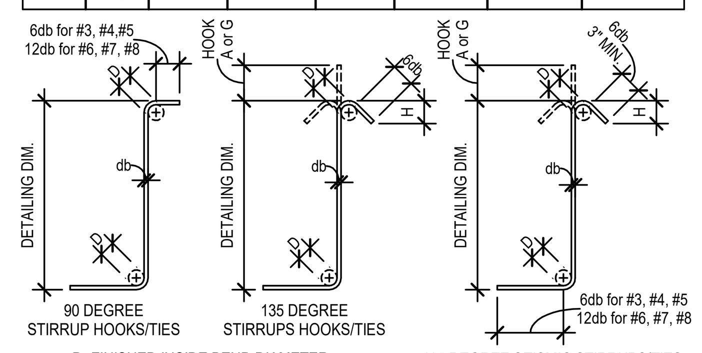

90 DEGREE STIRRUP HOOKS/TIES

135 DEGREE STIRRUPS HOOKS/TIES

135 DEGREE SEISMIC STIRRUPS/TIES

D=FINISHED INSIDE BEND DIAMETER

SCALE: 3/4" = 1'-0"

3 STIRRUP and TIE HOOK DETAILS

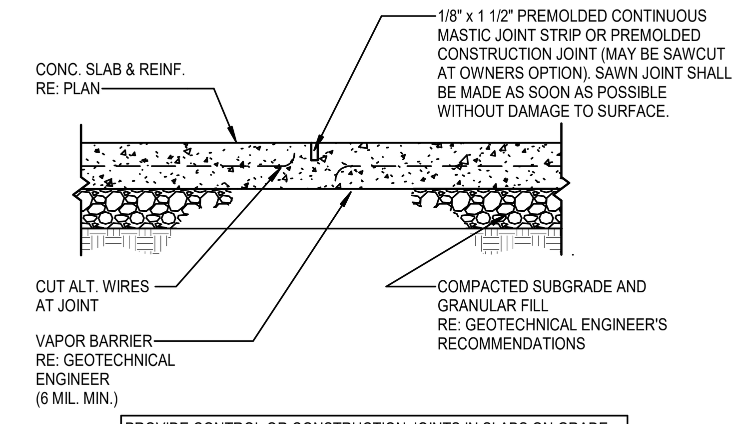

PROVIDE CONTROL OR CONSTRUCTION JOINTS IN SLABS ON GRADE TO BREAK UP SLAB INTO RECTANGULAR AREAS OF 400 SQUARE FEET OR LESS. AREAS SHALL BE APPROX. SQUARE AND HAVE NO ACUTE ANGLES. JOINT LOCATIONS SHALL BE APPROVED BY THE ARCHITECT.

SCALE: 3/4" = 1'-0"

4 TYPICAL SHRINKAGE CONTROL JOINT (S.J.)

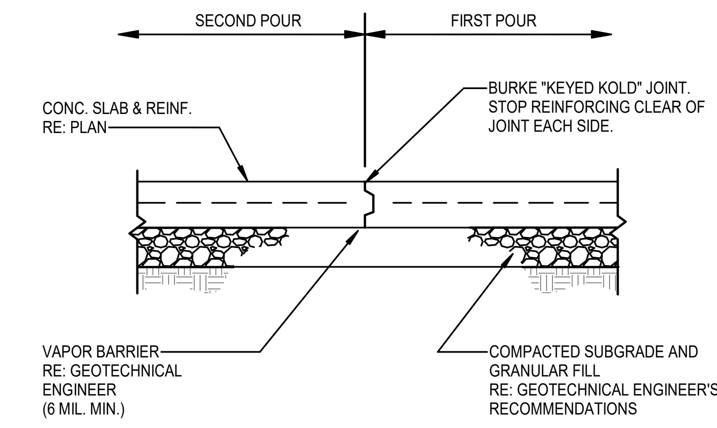

PROVIDE CONTROL OR CONSTRUCTION JOINTS IN SLABS ON GRADE TO BREAK UP SLAB INTO RECTANGULAR AREAS OF 400 SQUARE FEET OR LESS. AREAS SHALL BE APPROX. SQUARE AND HAVE NO ACUTE ANGLES. JOINT LOCATIONS SHALL BE APPROVED BY THE ARCHITECT.

SCALE: 3/4" = 1'-0"

5 TYPICAL CONSTRUCTION JOINT (C.J.)

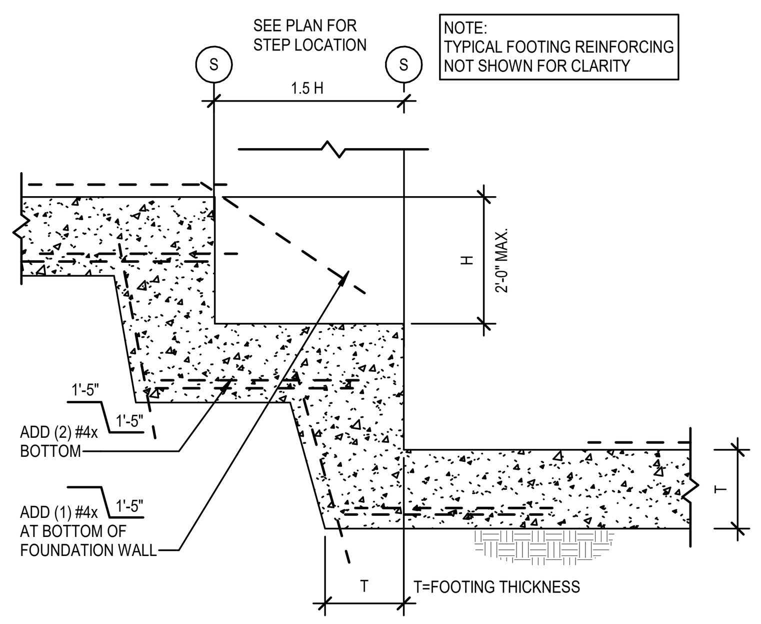

SCALE: 3/4" = 1'-0"

6 TYPICAL STEPPED FOOTING

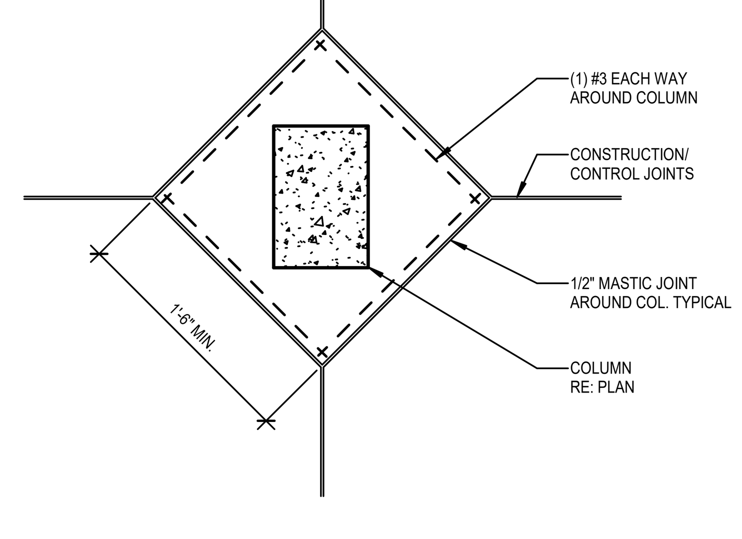

SCALE: 3/4" = 1'-0"

7 TYPICAL SLAB ISOLATION JOINT

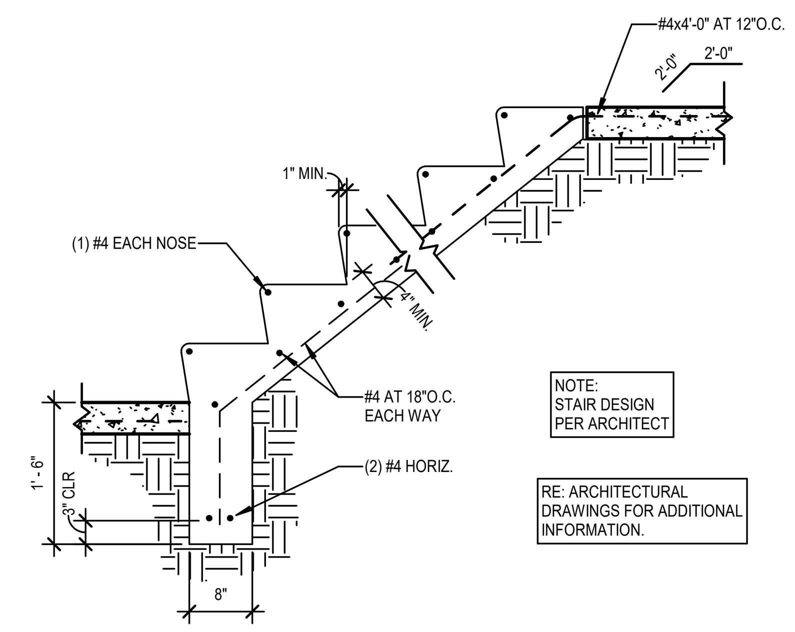

SCALE: 3/4" = 1'-0"

8 TYPICAL STAIR ON GRADE

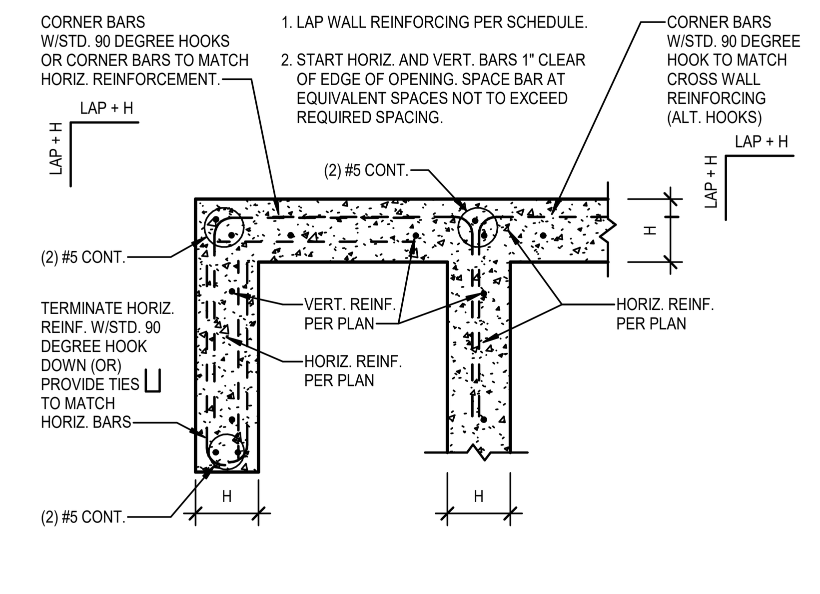

SCALE: 3/4" = 1'-0"

9 SINGLE CURTAIN WALL REINFORCEMENT PLACEMENT

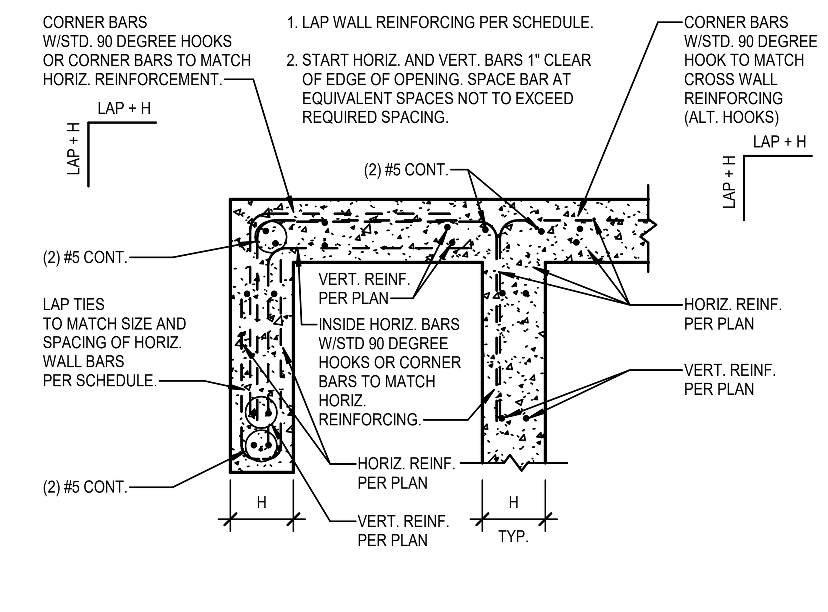

SCALE: 3/4" = 1'-0"

10 DOUBLE CURTAIN WALL REINFORCEMENT PLACEMENT

ACI 3187.7.1	CONCRETE EXPOSURE	MINIMUM COVER (INCHES)
(a)	CONCRETE CAST AGAINST AND PERMANENTLY EXPOSED TO EARTH	3"
(b)	CONCRETE EXPOSED TO EARTH OR WEATHER NO. 6 THROUGH NO. 18 BARS NO. 5 BARS AND SMALLER	 2" 1 1/2"
(c)	CONCRETE NOT EXPOSED TO WEATHER OR IN CONTACT WITH GROUND SLABS, WALLS, JOISTS: NO. 14 AND NO. 18 BARS NO. 11 BARS AND SMALLER BEAMS, COLUMNS: PRIMARY REINFORCEMENT, TIES, STIRRUPS, SPIRALS SHELLS, FOLDED PLATE MEMBERS: NO. 6 BAR AND LARGER NO. 5 BAR, W31 OR D31 WIRE, AND SMALLER	 1 1/2" 3/4" 1 1/2" 3/4" 1/2"

NOTES: THE ABOVE MINIMUM CONCRETE COVER SHALL BE PROVED FOR DEFORMED REINFORCING BARS, BUT SHALL NOT BE LESS THAN THAT REQUIRED TO PROVIDE FIRE PROTECTION - SEE DETAIL 13 THIS SHEET.

SCALE: 3/4" = 1'-0"

11 CONCRETE PROTECTION FOR REINFOREMENT C.I.P. CONCRETE (NON-PRESTRESSED)

	ACI 3187.7.2	CONCRETE EXPOSURE	MINIMUM COVER (INCHES)
	(a)	CONCRETE CAST AGAINST AND PERMANENTLY EXPOSED TO EARTH	3"
	(b)	CONCRETE EXPOSED TO EARTH OR WEATHER WALL PANELS, SLABS, JOISTS OTHER MEMBERS	 1" 1 1/2"
	(c)	CONCRETE NOT EXPOSED TO WEATHER OR IN CONTACT WITH GROUND SLABS, WALLS, JOISTS: BEAMS, COLUMNS: PRIMARY REINFORCEMENT, TIES, STIRRUPS, SPIRALS SHELLS, FOLDED PLATE MEMBERS: NO. 5 BAR, W31 OR D31 WIRE, AND SMALLER OTHER REINFORCEMENT	 3/4" 1 1/2" 1" 3/8" db BUT NOT LESS THAN 3/4"

NOTES: THE ABOVE MINIMUM CONCRETE COVER SHALL BE PROVED FOR DEFORMED REINFORCING BARS, BUT SHALL NOT BE LESS THAN THAT REQUIRED TO PROVIDE FIRE PROTECTION - SEE DETAIL 13 THIS SHEET.

SCALE: 3/4" = 1'-0"

12 CONCRETE PROTECTION FOR REINFOREMENT CAST-IN-PLACE CONCRETE (PRESTRESSED)

MINIMUM CONCRETE THICKNESS	REQUIRED FIRE PROTECTION RATING (RE: ARCH.)			
	4 HR	3 HR	2 HR	1 HR
MINIMUM WALL THICKNESS PER IBC TABLE 721.1(2)	7"	6.2"	5"	3.5"
MINIMUM SLAB THICKNESS PER IBC TABLE 721.1(3)	7"	6.2"	5"	3.5"

NOTES:
1. SILICEOUS AGGREGATE ASSUMED.

MINIMUM COVER TO SLAB REINFORCING STEEL PER IBC TABLE 721.1(3) FOOTNOTE b.	REQUIRED FIRE PROTECTION RATING (RE: ARCH.)			
	4 HR	3 HR	2 HR	1 HR
UNRESTRAINED (END SPANS)	1 5/8"	1 1/4"	1"	3/4"
RESTRAINED (INTERIOR SPANS)	3/4"	3/4"	3/4"	3/4"

NOTES:
1. SILICEOUS AGGREGATE ASSUMED.

SCALE: 3/4" = 1'-0"

13 MINIMUM CONCRETE THICKNESS AND CONCRETE PROTECTION FOR REINFOREMENT IN FIRE RATED CONCRETE WALLS AND SLABS

MINIMUM COVER TO POST TENSION TENDONS IN SLAB PER IBC TABLE 721.1 (1)	REQUIRED FIRE PROTECTION RATING (RE: ARCH.)			
	4 HR	3 HR	2 HR	1 HR
UNRESTRAINED (END SPANS)	---	2.4"	1.8"	1.8"
RESTRAINED (INTERIOR SPANS)	1.5"	1.2"	0.9"	0.9"

NOTES:
1. THE ABOVE MINIMUM CONCRETE COVER TO TENDONS HAS BEEN INCREASED BY 20 PERCENT FOR SLABS WITH SILICEOUS AGGREGATE - IBC TABLE 720.1 (1) FOOTNOTE f.
2. COVER TO THE PRESTRESSING STEEL SHALL BE INCREASED 1/2" AT ANCHORS.
3. MINIMUM COVER TO STEEL BEARING PLATES SHALL BE 1" IN BEAMS AND 3/4" IN SLABS.

MINIMUM COVER TO POST TENSION TENDONS IN BEAMS AND GIRDERS 12" WIDE AND GREATER PER IBC TABLE 721.1 (1)	REQUIRED FIRE PROTECTION RATING (RE: ARCH.)			
	4 HR	3 HR	2 HR	1 HR
UNRESTRAINED (END SPANS)	3"	2 1/2"	2"	1 1/2"
RESTRAINED (INTERIOR SPANS)	2"	1 3/4"	1 1/2"	1 1/2"

SCALE: 3/4" = 1'-0"

14 MINIMUM CONCRETE COVER FOR POST TENSION TENDONS IN FIRE RATED CONCRETE SLABS, BEAMS AND GIRDERS

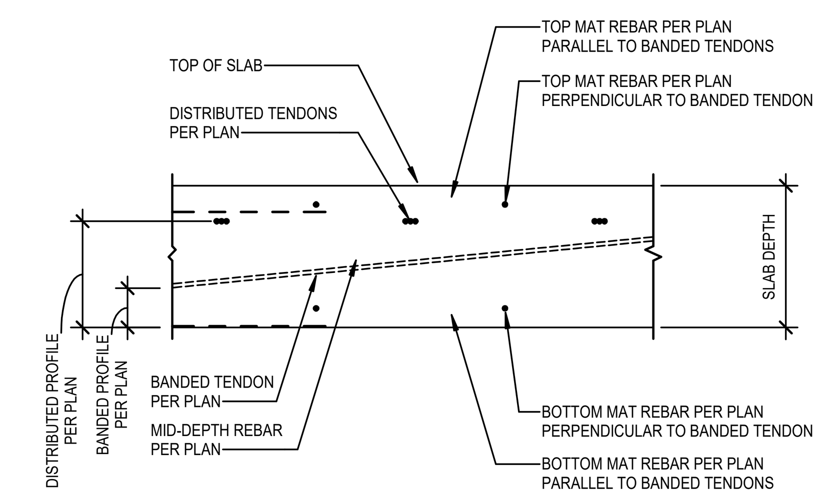

NOTES:
1. FOR NON-PRESTRESSED CONCRETE SLABS PROVIDE COVER TO REINFORCING BARS PER 11/S6.00 UNLESS GREATER COVER IS REQUIRED FOR FIRE PROTECTION PER 13/S6.00.
2. FOR PRESTRESSED CONCRETE SLABS PROVIDE COVER TO REINFORCING BARS PER 12/S6.00 UNLESS GREATER COVER IS REQUIRED FOR FIRE PROTECTION PER 13/S6.00.
3. FOR POST TENSION TENDONS PROVIDE COVER PER 14/S6.00.

SCALE: 3/4" = 1'-0"

15 SLAB REINFORCEMENT PLACEMENT DETAIL

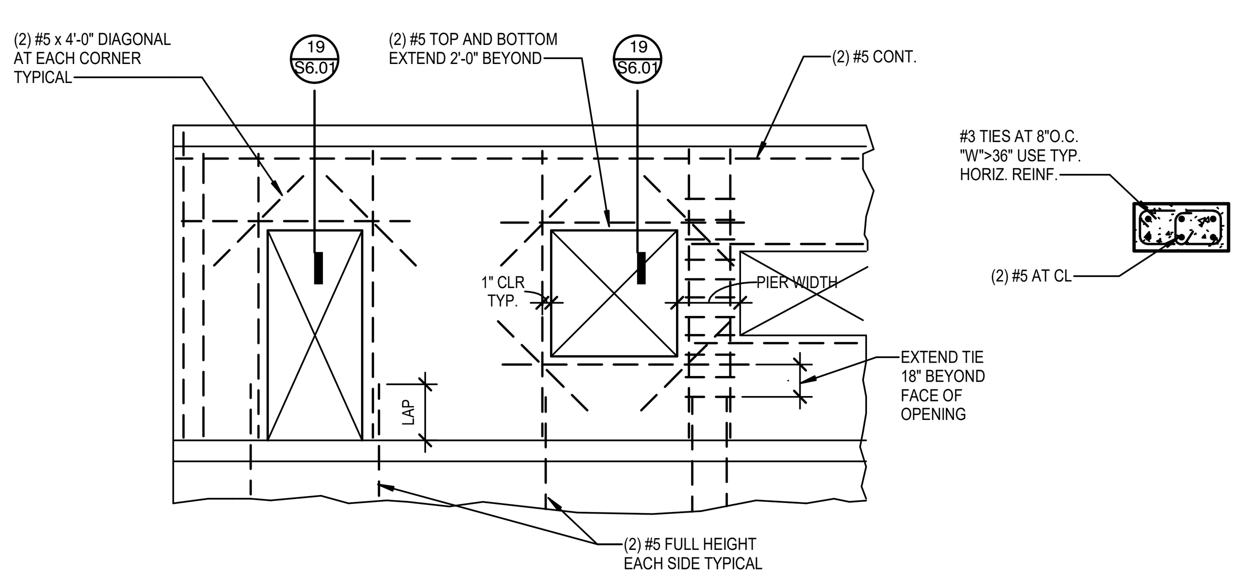

SCALE: 3/4" = 1'-0"

16 TYPICAL CONCRETE WALL OPENING REINFORCING

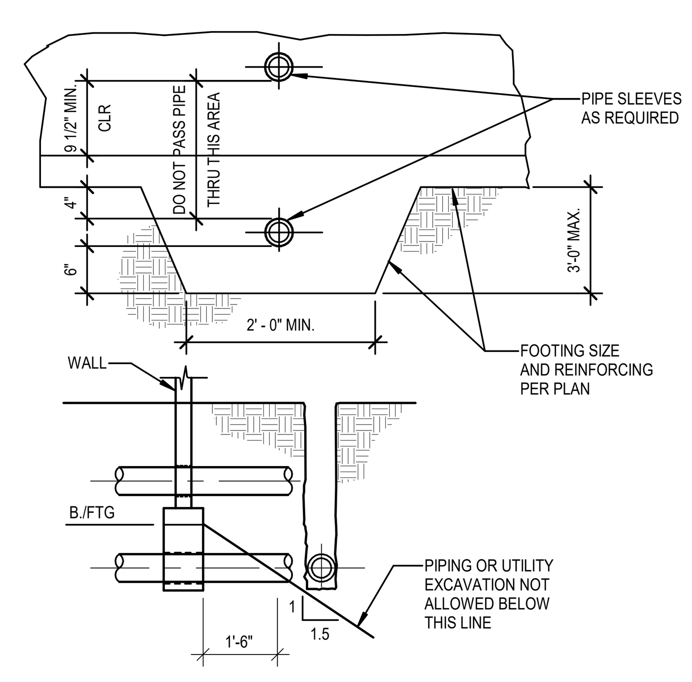

SCALE: 3/4" = 1'-0"

18 TYPICAL WALL PENETRATION

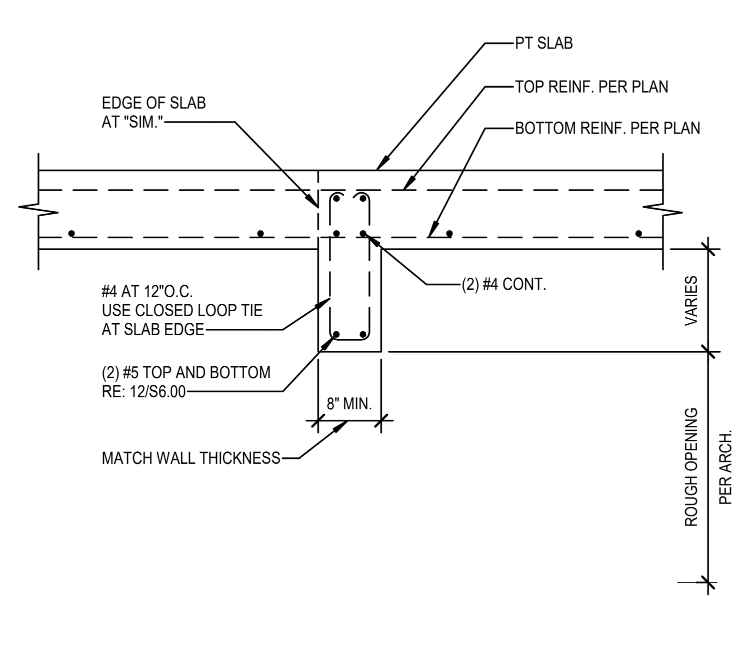

SCALE: 3/4" = 1'-0"

19 TYPICAL CONCRETE HEADER

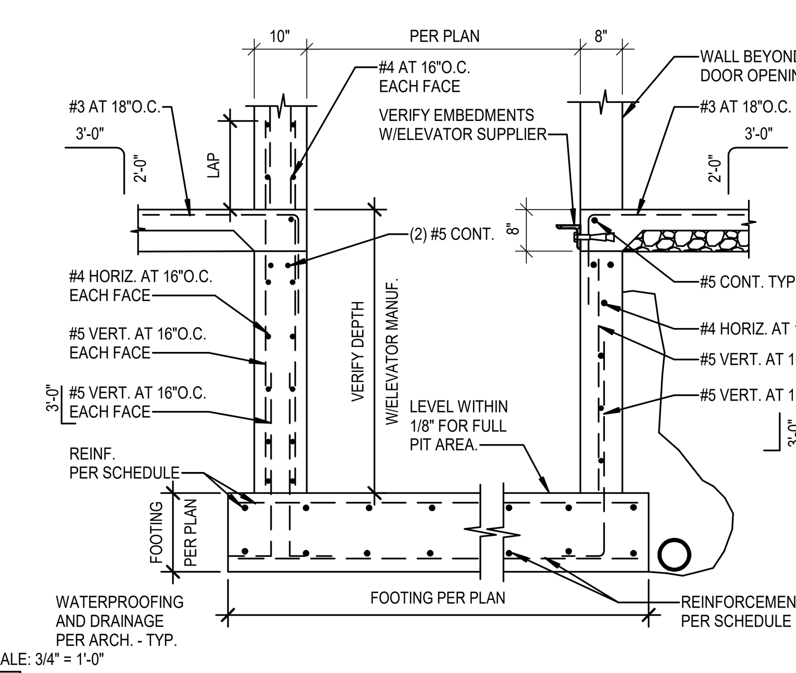

SCALE: 3/4" = 1'-0"

20 ELEVATOR PIT SECTION

CT ENGINEERING INC.
Structural Engineers
180 Nickerson Street Suite 302 Seattle, WA 98109
206.285.4512 (V) 206.285.0618 (F)
www.ctengineering.com

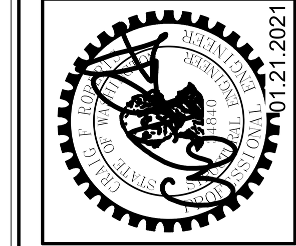

No.	REVISION	DATE

JOB #: 20021
ENG: TSW
CAD: TSW
SCALE: 3/4" = 1'-0"

KEY ISSUE DATES:
PERMIT: 01.21.2021

FOR PERMIT

Concrete Details

BLOSSOM APARTMENTS
214-220 5th Avenue S
Seattle, WA 98104

S6.01

C:\Users\TWandschneider\Documents\20021 - Blossom Apartments - v20_tylerw@ctengineering.com.rvt
1/21/2021 11:16:51 AM

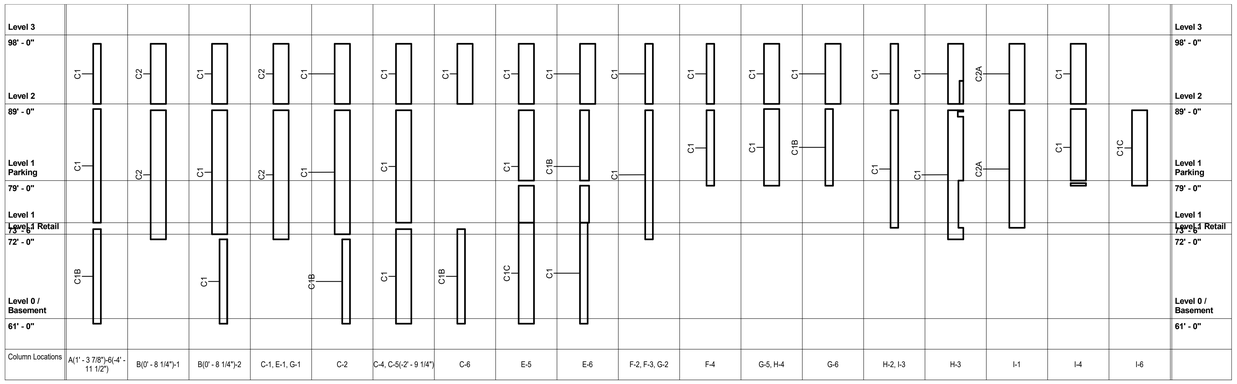

SCALE: 1/8" = 1'-0"

2 COLUMN SCHEDULE

BAR SIZE	30X BAR DIA. (db)	fc = 3000 PSI	fc = 4000 PSI	fc = 5000 PSI
		COLUMN BAR LAP SPLICE	COLUMN BAR LAP SPLICE	COLUMN BAR LAP SPLICE
#6	23"	35"	32"	27"
#7	26"	52"	45"	50"
#8	30"	59"	51"	46"
#9	34"	66"	58"	52"
#10	38"	74"	64"	57"
#11	42"	81"	70"	63"

COLUMN REINFORCING LAP SPLICE SCHEDULE;

1. COLUMN SPLICES SHOWN ARE FOR COLUMN VERTICAL BARS WHERE ZONE A TIES ARE PROVIDED THROUGH THE LAP SPLICE LENGTH. TIES SHALL HAVE SEISMIC HOOK DETAILING PER 3/S6.00.
2. COLUMN BAR LAP SPLICES SHALL BE AS NOTED ABOVE UNLESS SPECIFICALLY NOTED TO BE 30 BAR DIAMETERS IN THE COLUMN SCHEDULE.

SCALE: 3/4" = 1'-0"

5 COLUMN BAR LAP SPLICE SCHEDULE

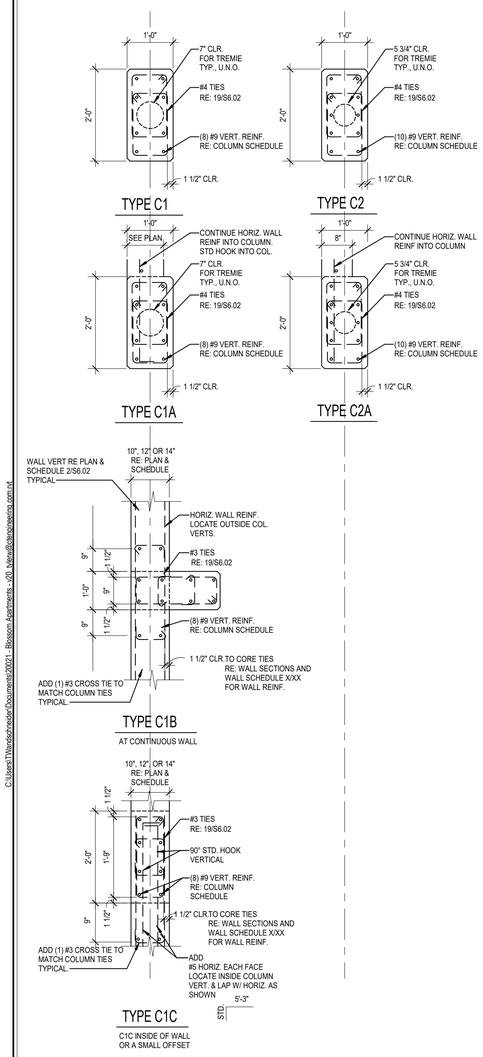

SCALE: 3/4" = 1'-0"

16 TYPICAL COLUMN TYPES

COLUMNS (TYPE CC1 TO CC2)

#4 TIES SPACING RE: ZONE			
CLEAR HEIGHT	ZONE A	ZONE B	ZONE C
16'-0" TO 20'-0"	(15) SPACES AT 4" O.C.	AT 6" O.C.	AT 4" O.C.
14'-0" TO 16'-0"	(12) SPACES AT 4" O.C.	AT 6" O.C.	AT 4" O.C.
12'-0" TO 14'-0"	(10) SPACES AT 4" O.C.	AT 6" O.C.	AT 4" O.C.
9'-0" TO 12'-0"	(8) SPACES AT 4" O.C.	AT 6" O.C.	AT 4" O.C.
LESS THAN 9'-0"	(6) SPACES AT 4" O.C.	AT 6" O.C.	AT 4" O.C.

WALL COLUMNS (TYPE CC5)

#3 TIES SPACING RE: ZONE			
CLEAR HEIGHT	ZONE A	ZONE B	ZONE C
16'-0" TO 20'-0"	(15) SPACES AT 4" O.C.	AT 4" O.C.	AT 4" O.C.
14'-0" TO 16'-0"	(12) SPACES AT 4" O.C.	AT 4" O.C.	AT 4" O.C.
12'-0" TO 14'-0"	(10) SPACES AT 4" O.C.	AT 4" O.C.	AT 4" O.C.
9'-0" TO 12'-0"	(8) SPACES AT 4" O.C.	AT 4" O.C.	AT 4" O.C.
LESS THAN 9'-0"	(6) SPACES AT 4" O.C.	AT 4" O.C.	AT 4" O.C.

COLUMN NOTES

1. LAP VERTICAL BARS IN COLUMNS CLASS B LAP OF BAR ABOVE. RE: DETAIL 5/S6.02. TYPICAL, UNLESS NOTED OTHERWISE.
2. CONCRETE PROTECTION - 1 1/2" MINIMUM COVER TO TIES UNLESS NOTED OTHERWISE.
3. CONCRETE fc = 5000 PSI AT 28 DAYS.
4. ALL REINFORCING STEEL SHALL BE ASTM A615 GRADE 60.
5. DETAIL IN ACCORDANCE WITH ACI 315.
6. FOOTING DOWELS SHALL BE #6 BARS TO MATCH COLUMN VERTICAL BARS. TYPICAL, UNLESS NOTED OTHERWISE.
7. RE: 5/S6.01 FOR COLUMN AT FLAT SLAB.
8. VERIFY AND COORDINATE ALL COLUMN LOCATIONS WITH ARCHITECT.

NOTE:

PASS TOP BARS NEAR CENTER OF COLUMN UNDER DISTRIBUTED TENDONS AND TOP BARS NEAR EDGES OF DROP CAP OVER DISTRIBUTED TENDONS AS REQUIRED FOR 1" MINIMUM COVER
POST TENSIONING AND REINF.

NOTE:
STUD RAIL NOT SHOWN
RE: PLAN, SCHEDULE & 9/S7.03

NOTE:
FIELD COORDINATE TOP OF COLUMN HOOKS WITH STEP IN SLAB AT EXTERIOR. TYPICAL.

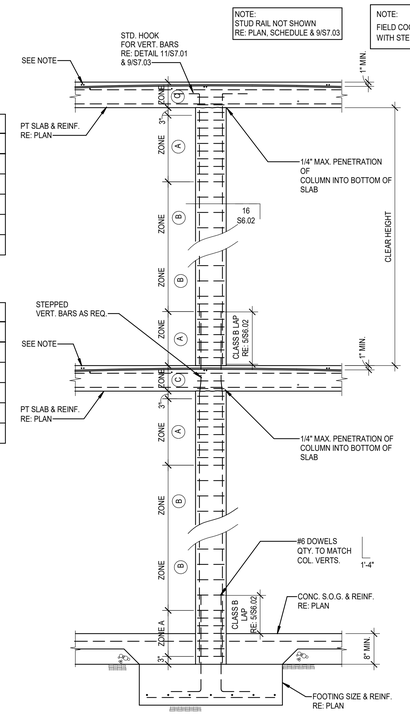

SCALE: 3/4" = 1'-0"

19 TYPICAL COLUMN SECTION W/O DROP CAPS

CT ENGINEERING INC.
Structural Engineers
180 Nickerson Street Suite 302 Seattle, WA 98109
206.282.4312 (V) 206.285.0618 (F)
www.ctengineering.com

01.21.2021

No.	REVISION	DATE

JOB #: 20021
ENG: TSW
CAD: TSW
SCALE: As indicated
KEY ISSUE DATES:
PERMIT: 01.21.2021

FOR PERMIT

Column Sections and Details

BLOSSOM APARTMENTS
214-220 5th Avenue S
Seattle, WA 98104

S6.02

C:\Users\TWatchorn\AppData\Local\Temp\acpublish_1280\Blossom Apartments - v20_NewerDesignSession.rvt

1/21/2021 11:16:53 AM

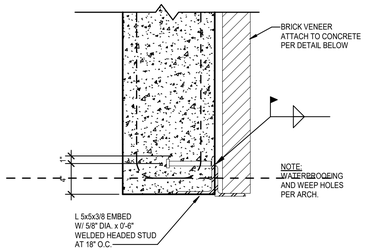

SCALE: 1 1/2" = 1'-0"

1 TYPICAL VENEER ATTACHMENT

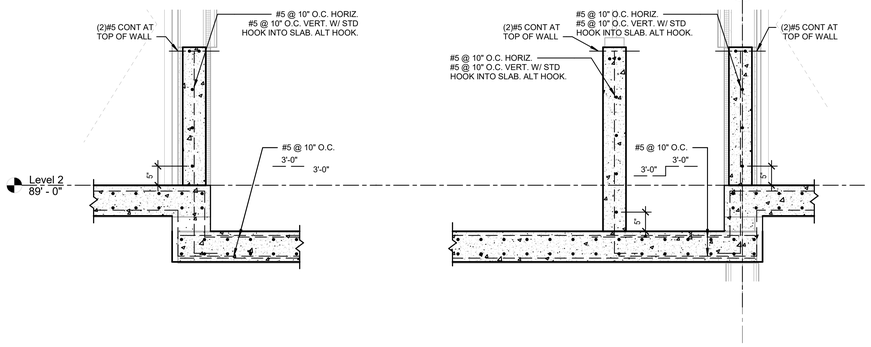

SCALE: 3/4" = 1'-0"

3 SECTION AT BIO RETENTION SLAB STEP

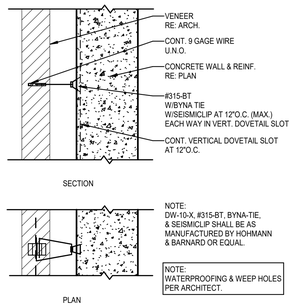

SCALE: 3/4" = 1'-0"

6 TYPICAL VENEER ATTACHMENT

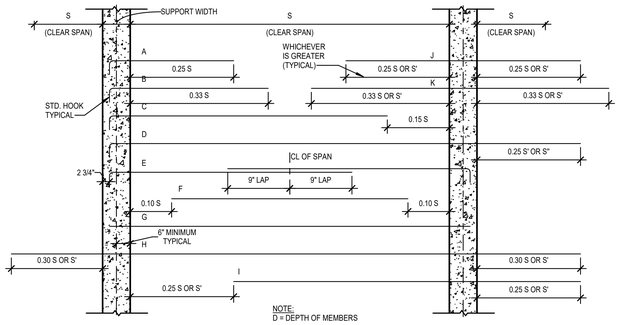

SCALE: 1/2" = 1'-0"

15 TYPICAL BAR DETAILS

CT ENGINEERING INC.
Structural Engineers
160 Nickerson Street Suite 302 Seattle, WA 98109
206.282.4512 (V) 206.285.0618 (F)
www.ctengineering.com

01.21.2021

No.	REVISION	DATE

JOB #: 20021
ENG: TSW
CAD: TSW
SCALE: As indicated
KEY ISSUE DATES:
PERMIT: 01.21.2021

FOR PERMIT

Concrete Details

BLOSSOM APARTMENTS
214-220 5th Avenue S
Seattle, WA 98104

S6.03

C:\Users\TSW\AppData\Local\Temp\AcPublish_1164\Drawings\20021 - Blossom Apartments - 220 Avenue S\Blossom Apartments.rvt

1/21/2021 11:16:55 AM

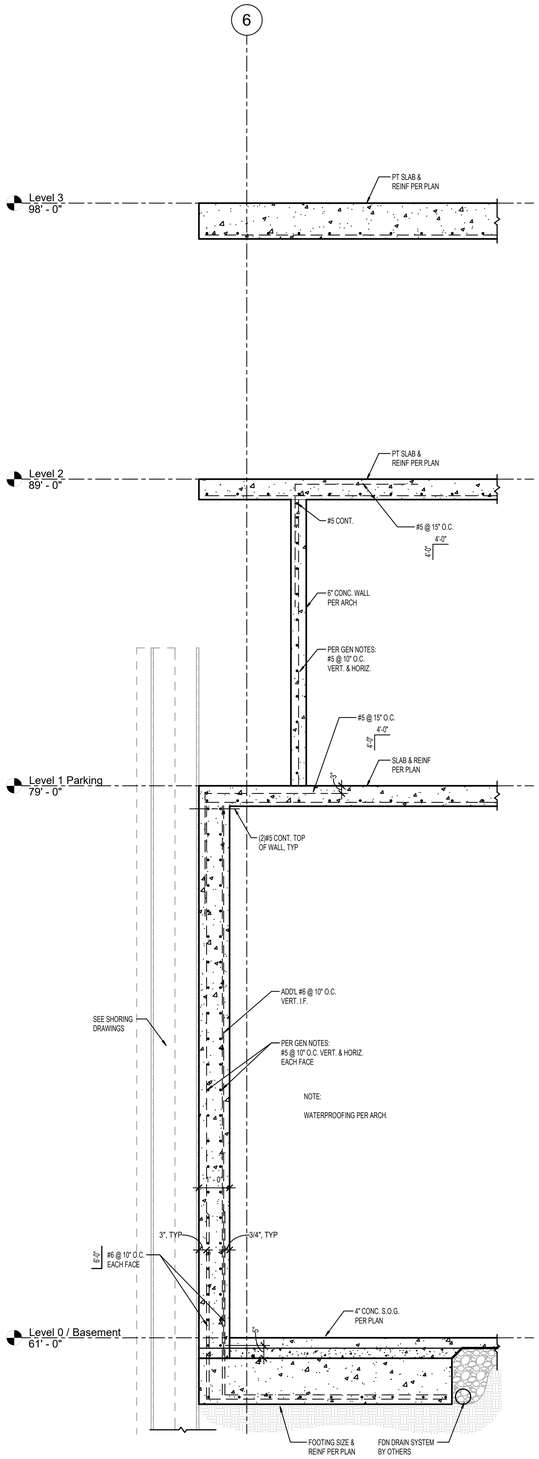

SCALE: 1/2" = 1'-0"

1 CONCRETE WALL SECTION

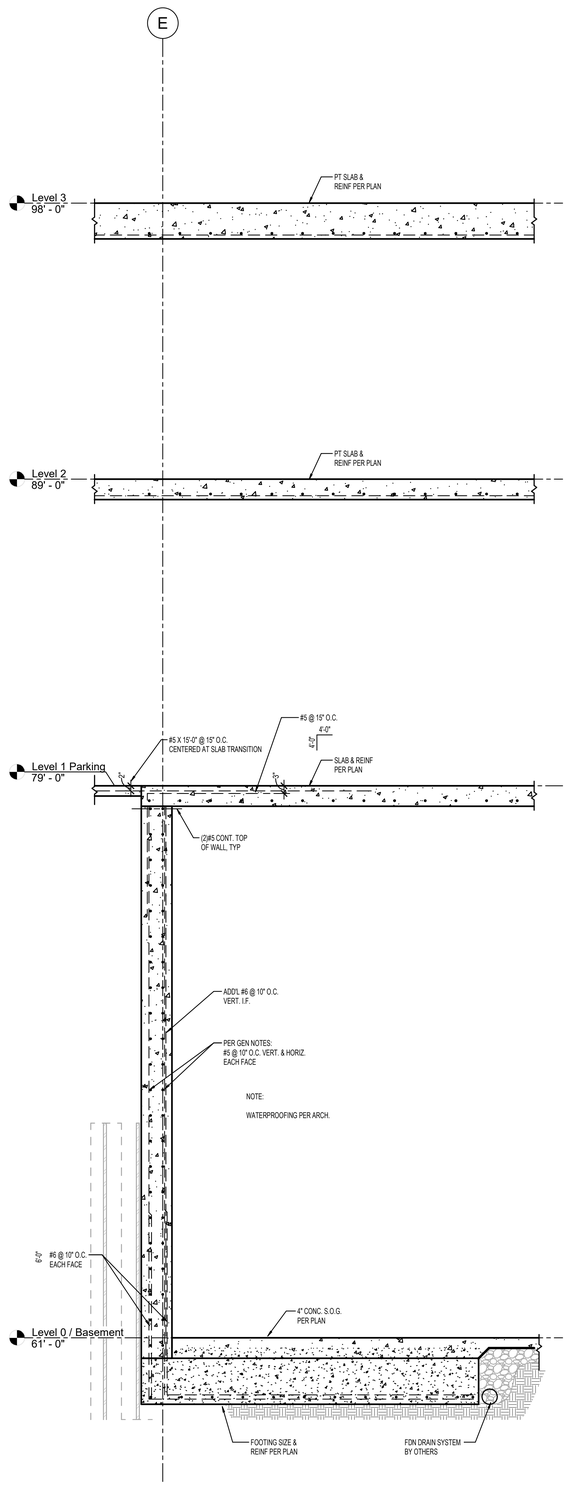

SCALE: 1/2" = 1'-0"

2 CONCRETE WALL SECTION

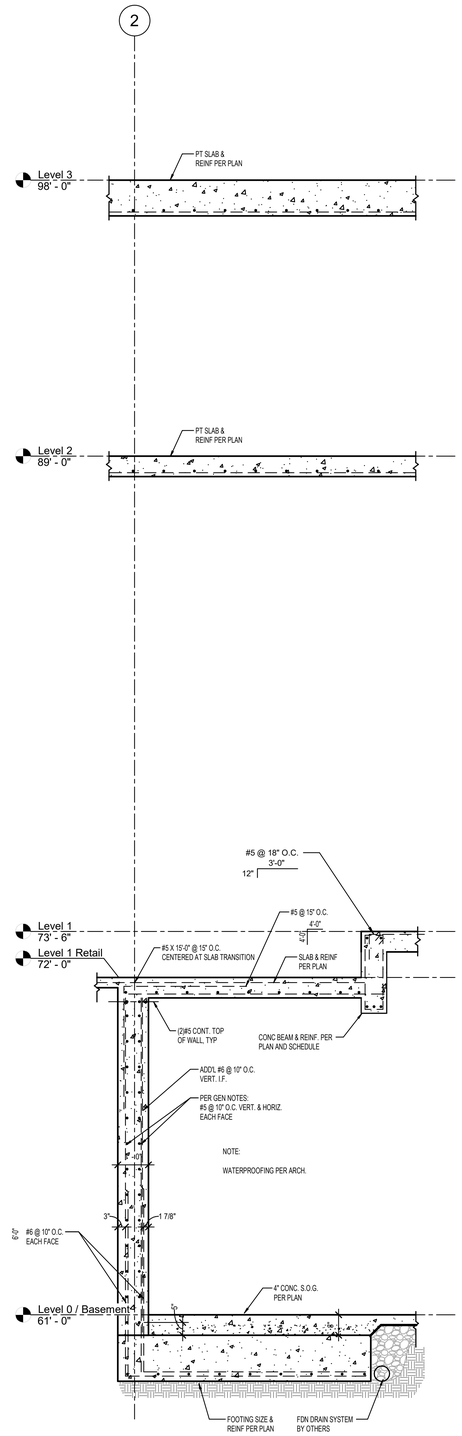

SCALE: 1/2" = 1'-0"

3 CONCRETE WALL SECTION

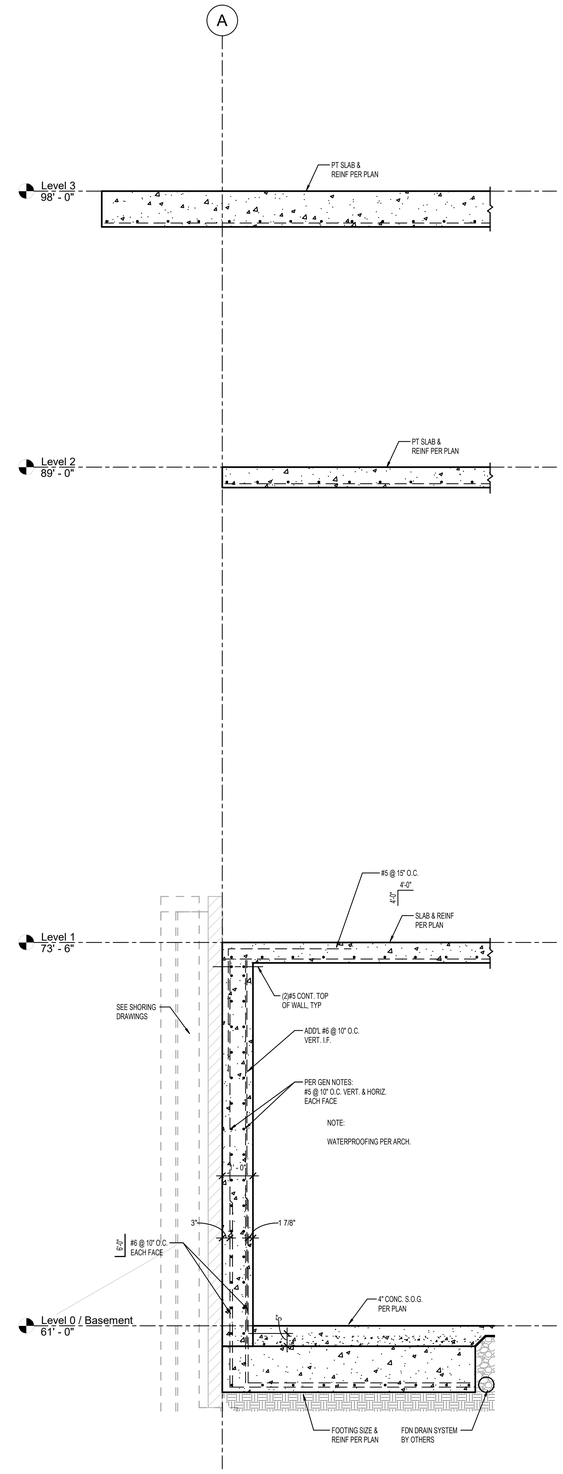

SCALE: 1/2" = 1'-0"

4 CONCRETE WALL SECTION

CT ENGINEERING INC.
Structural Engineers
160 Nickerson Street Suite 302 Seattle, WA 98109
206.285.4512 (V) 206.285.0618 (F)
www.ctengineering.com

01.21.2021

No.	REVISION	DATE

JOB #: 20021
ENG: TSW
CAD: TSW
SCALE: 1/2" = 1'-0"
KEY ISSUE DATES:

PERMIT: 01.21.2021

FOR PERMIT

Concrete Wall Sections

BLOSSOM APARTMENTS
214-220 5th Avenue S
Seattle, WA 98104

S6.04

C:\Users\TSWrecht\AppData\Local\Temp\acpublish_1164\20021 - Blossom Apartments - v20 - tsw@ctengineering.com.rvt
1/21/2021 11:16:57 AM

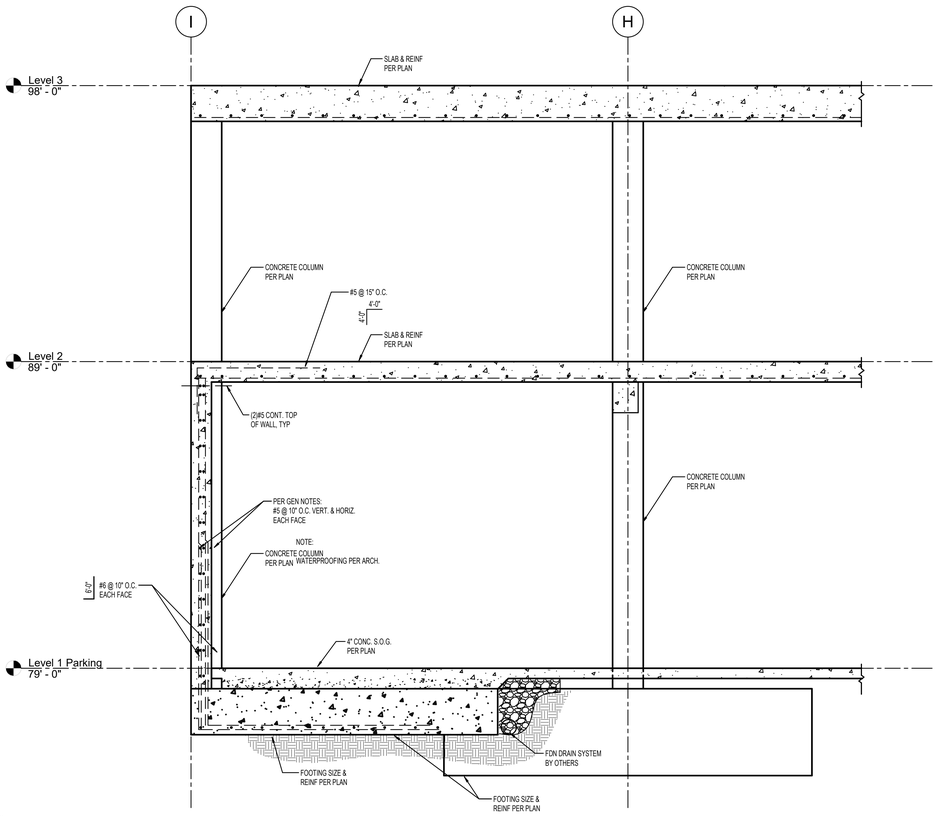

SCALE: 1/2" = 1'-0"

1 CONCRETE WALL SECTION

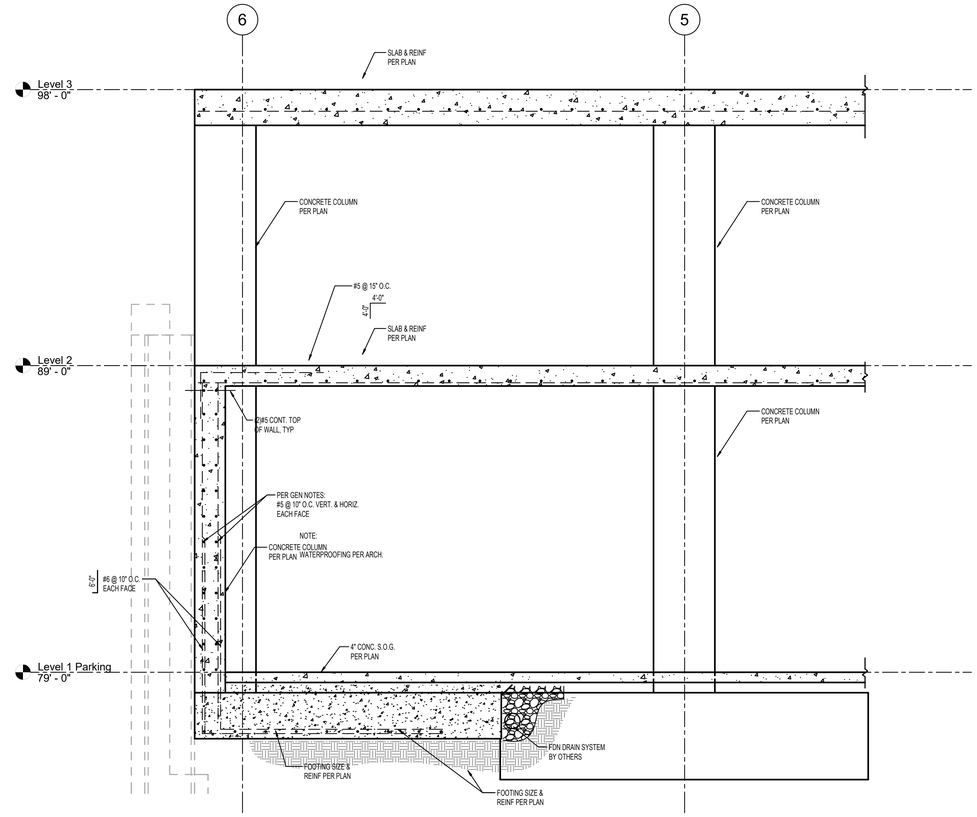

SCALE: 1/2" = 1'-0"

2 CONCRETE WALL SECTION

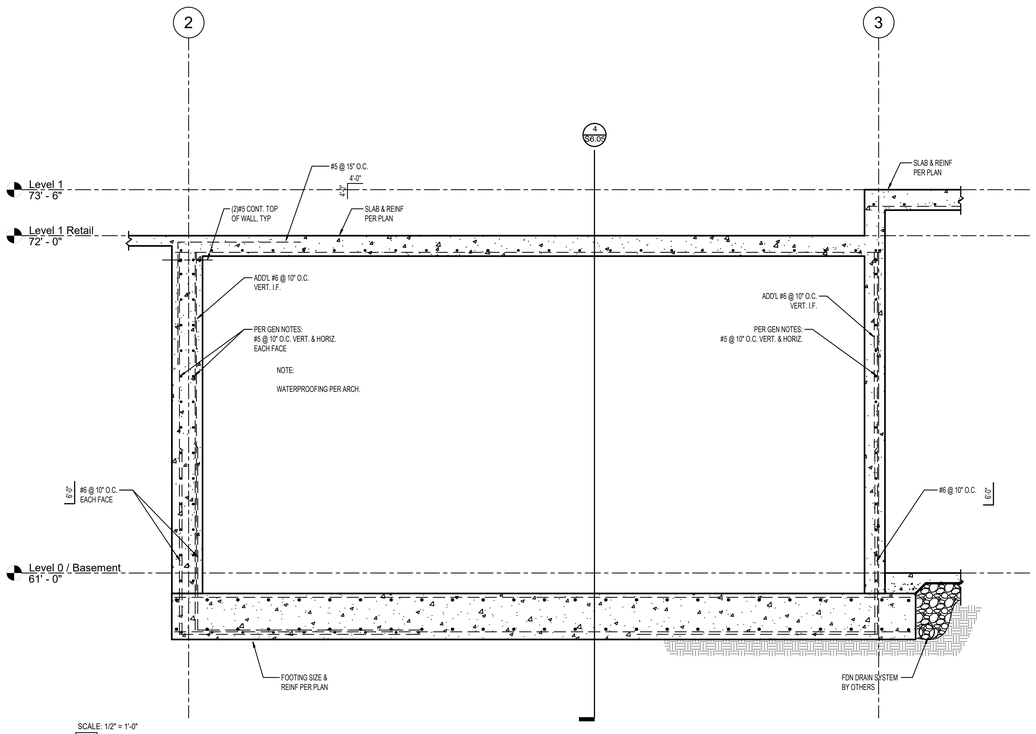

SCALE: 1/2" = 1'-0"

3 DETENTION VAULT CONCRETE WALL SECTION

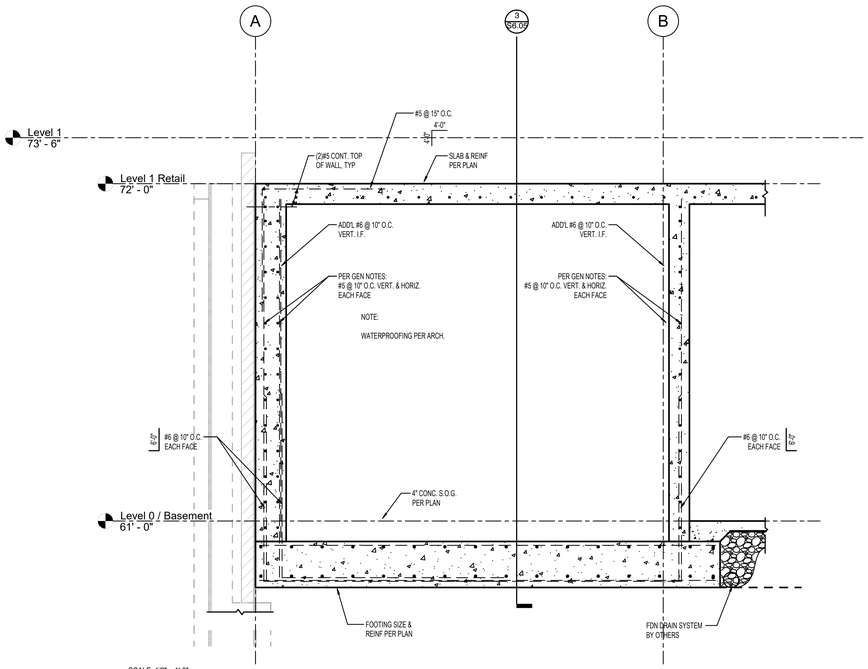

SCALE: 1/2" = 1'-0"

4 DETENTION VAULT CONCRETE WALL SECTION

CT ENGINEERING INC.
Structural Engineers
180 Nickerson Street Suite 302 Seattle, WA 98109
206.285.4512 (V) 206.285.0618 (F)
www.ctengineering.com

01.21.2021

No.	REVISION	DATE

JOB #: 20021
ENG: TSW
CAD: TSW
SCALE: 1/2" = 1'-0"
KEY ISSUE DATES:
PERMIT: 01.21.2021

FOR PERMIT

Concrete Wall Sections

BLOSSOM APARTMENTS
214-220 5th Avenue S
Seattle, WA 98104

S6.05

C:\Users\TWandschneider\Documents\20021 - Blossom Apartments - v20_Mew@ctengineering.com.rvt

1/21/2021 11:17:00 AM

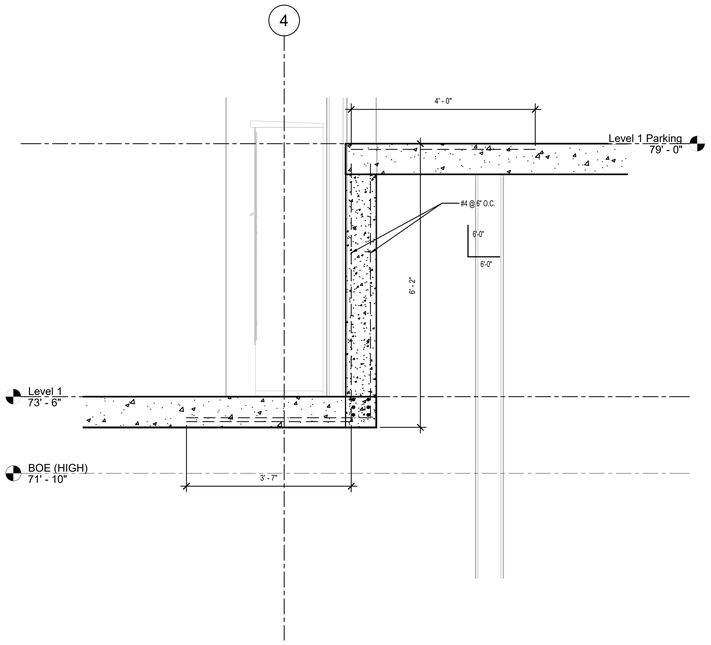

SCALE: 3/4" = 1'-0"

1 Detail 25

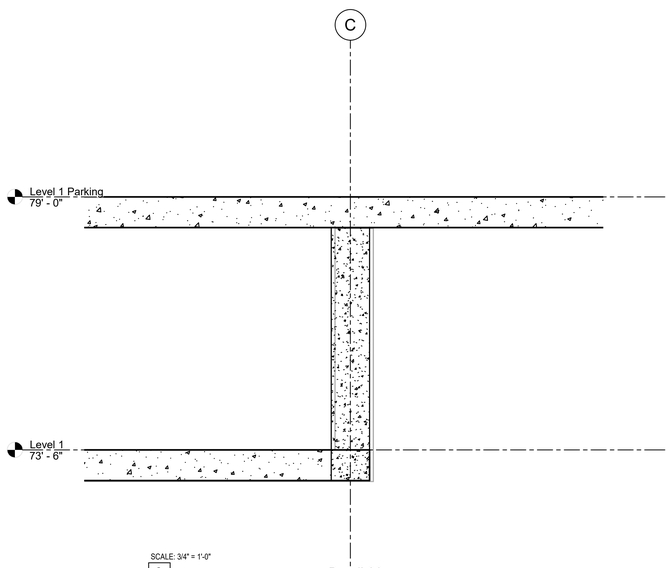

SCALE: 3/4" = 1'-0"

2 Detail 26

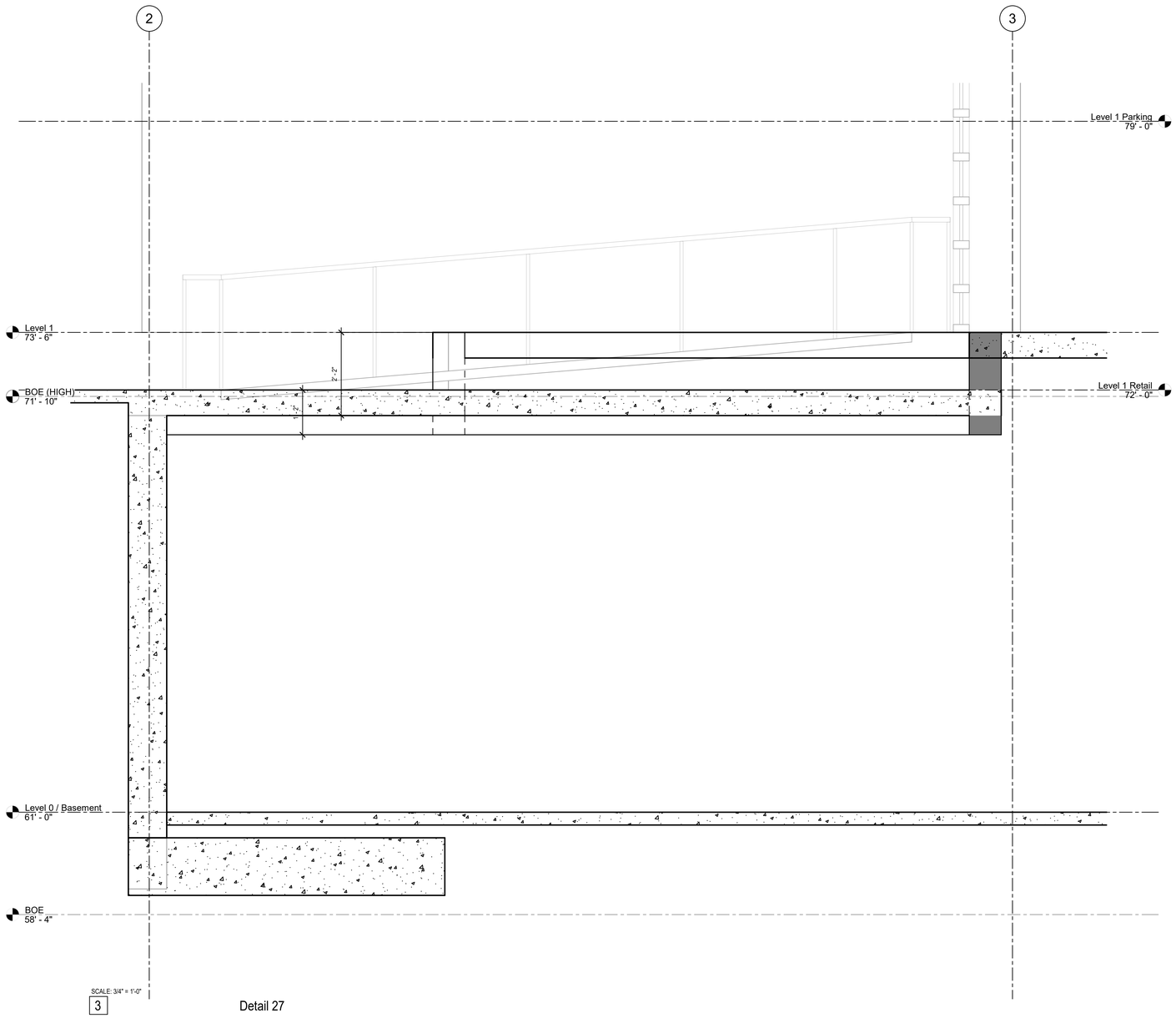

SCALE: 3/4" = 1'-0"

3 Detail 27

CT ENGINEERING INC.
Structural Engineers
180 Nickerson Street Suite 302 Seattle, WA 98109
206.285.4512 (V) 206.285.0618 (F)
www.ctengineering.com

01.21.2021

No.	REVISION	DATE

JOB #: 20021
ENG: TSW
CAD: TSW
SCALE: 3/4" = 1'-0"
KEY ISSUE DATES:
PERMIT: 01.21.2021

FOR PERMIT

Concrete Wall Sections

BLOSSOM APARTMENTS
214-220 5th Avenue S
Seattle, WA 98104

S6.06

C:\Users\TWandschneider\Documents\20021 - Blossom Apartments - v20_tylerw@ctengineering.com.rvt

1/21/2021 11:17:02 AM

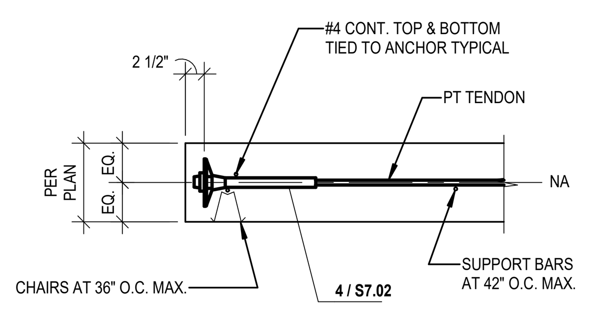

SCALE: 3/4" = 1'-0"

1 DEAD END ANCHOR at DISTRIBUTED TENDONS

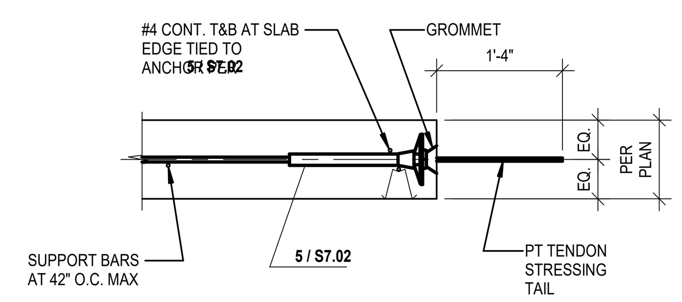

SCALE: 3/4" = 1'-0"

2 STRESSING END ANCHOR at DISTR. TENDONS

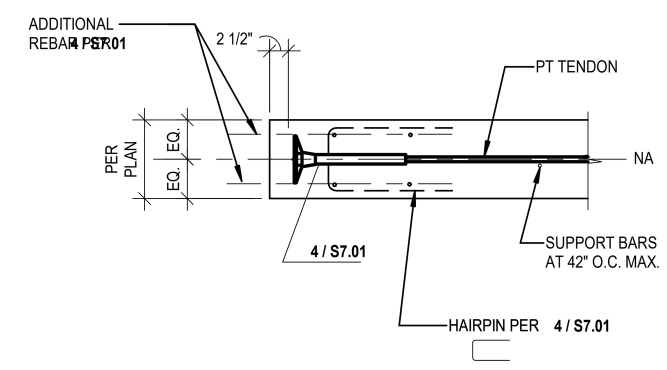

SCALE: 3/4" = 1'-0"

3 DEAD END ANCHOR at BANDED TENDONS

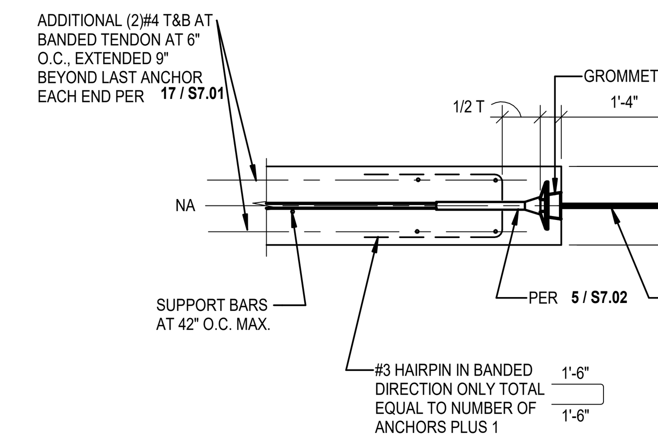

SCALE: 3/4" = 1'-0"

4 STRESSING END ANCHOR at BANDED TENDONS

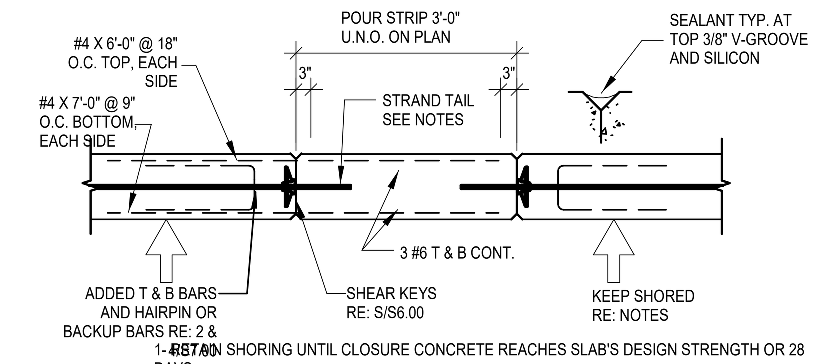

NOTES:
1- RETAIN SHORING UNTIL CLOSURE CONCRETE REACHES SLAB'S DESIGN STRENGTH OR 28 DAYS
2- CLOSURE STRIP TO BE POURED WITH NONSHRINK CONCRETE NOT LESS THAN 60 DAYS AFTER STRESSING
3- ROUGHEN & CLEAN JOINTS & WET PRIOR TO PLACING CONCRETE
4- ELIMINATE ACCIDENTAL MISALIGNMENT BETWEEN EDGE OF SLABS THAT ARE TO BE JOINED WITH A CLOSURE STRIP. USE MECHANICAL METHODS SUCH AS JACKING IF NECESSARY.
5- RAISE EDGE OF SLAB 1/4" @ CLOSURE TO ALLOW FOR SETTLEMENT.
6- PROVIDE WATERPROOFING MEMBRANE IF REQUIRED FOR WATER-TIGHTNESS
7- IF CLOSURE IS EXPOSED TO WEATHERING AND/OR MOISTURE USE GROMMETS; CUT STRESSED STRAND TAILS; PREPARE AND SEAL STRESSING POCKETS AS STIPULATED IN GENERAL NOTES; CAULK JOINT ALL AROUND.

SCALE: 3/4" = 1'-0"

5 CLOSURE STRIP

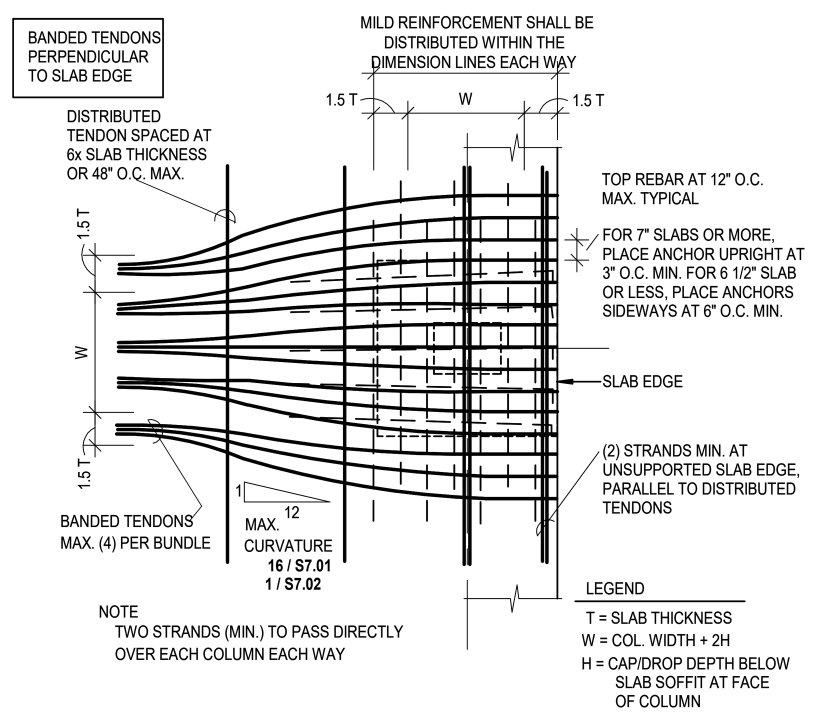

SCALE: 3/4" = 1'-0"

6 REINFORCEMENT at EXTERIOR COLUMNS

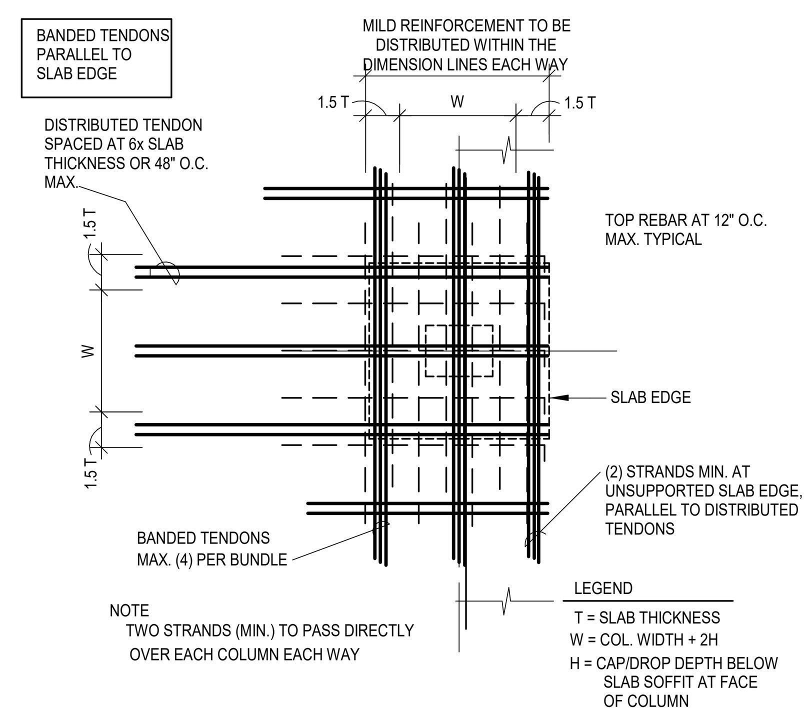

SCALE: 3/4" = 1'-0"

7 TOP REINFORCEMENT at EXTERIOR COLUMNS

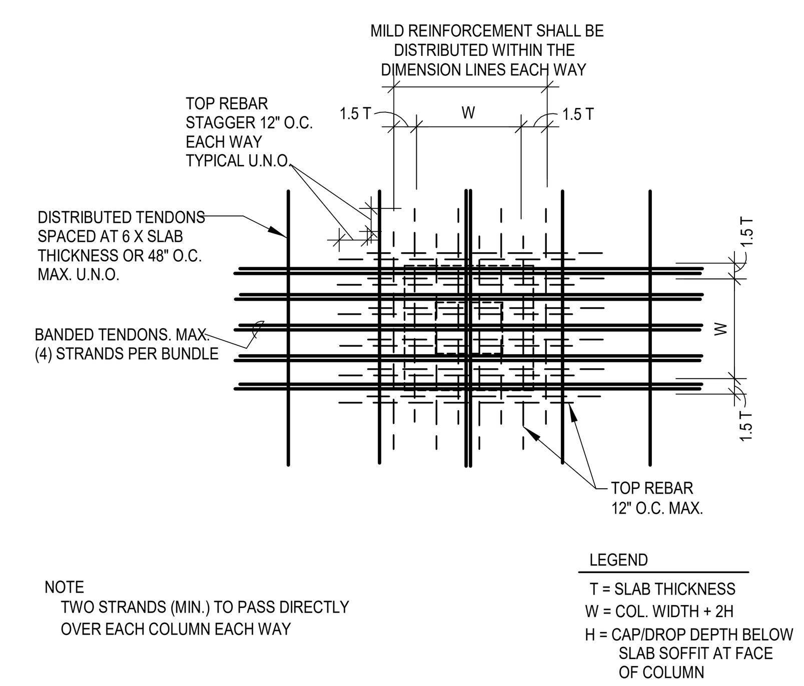

SCALE: 3/4" = 1'-0"

8 TOP REINFORCEMENT at INTERIOR COLUMNS

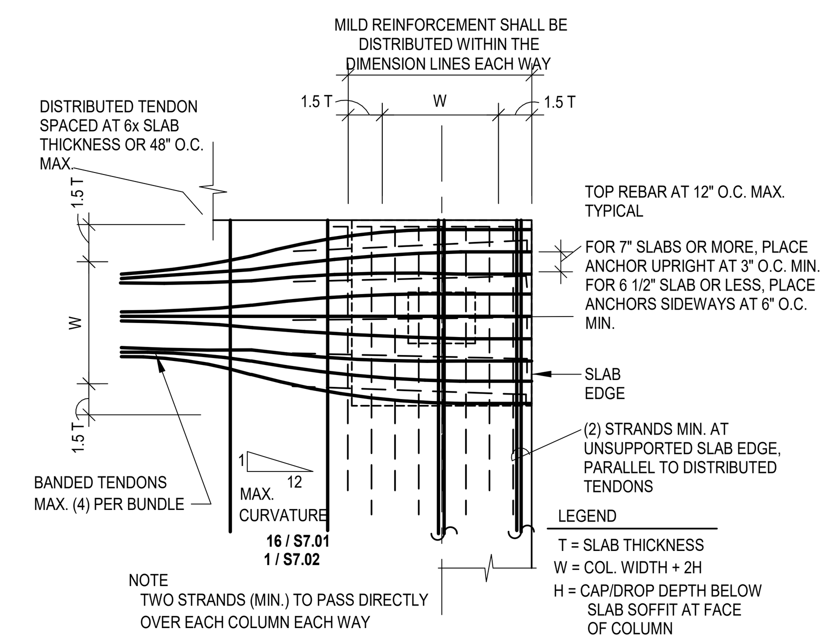

SCALE: 3/4" = 1'-0"

9 TOP REINFORCEMENT at CORNER COLUMNS

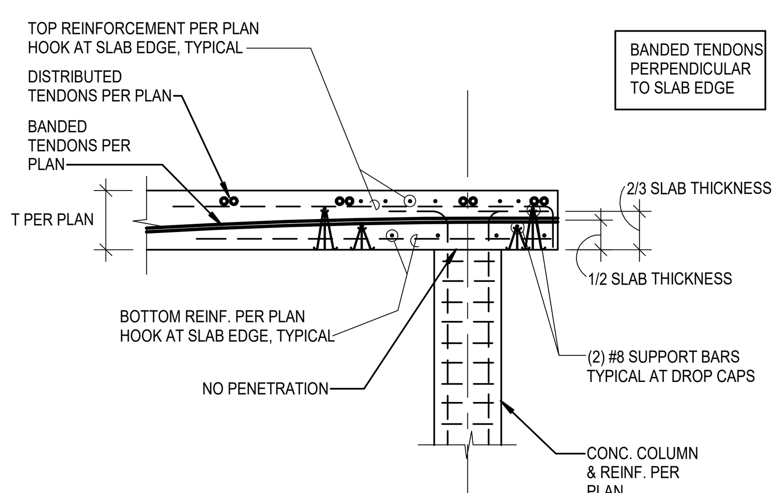

SCALE: 3/4" = 1'-0"

11 TYPICAL EXTERIOR COLUMN SECTION

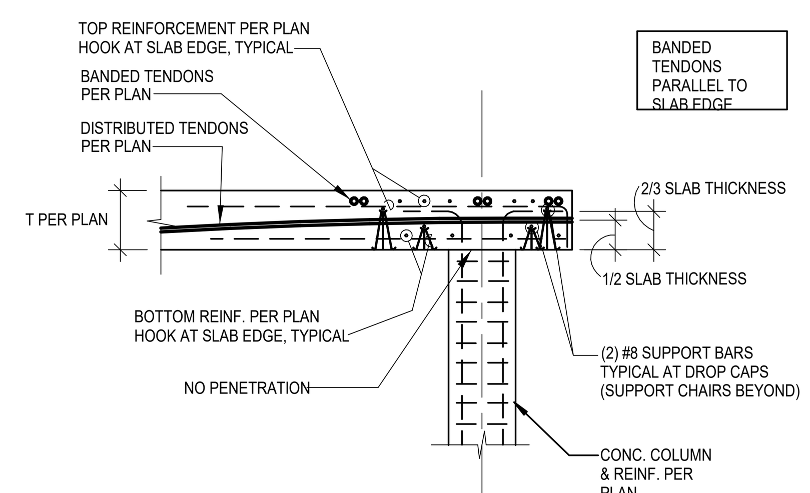

SCALE: 3/4" = 1'-0"

12 TYPICAL EXTERIOR COLUMN SECTION

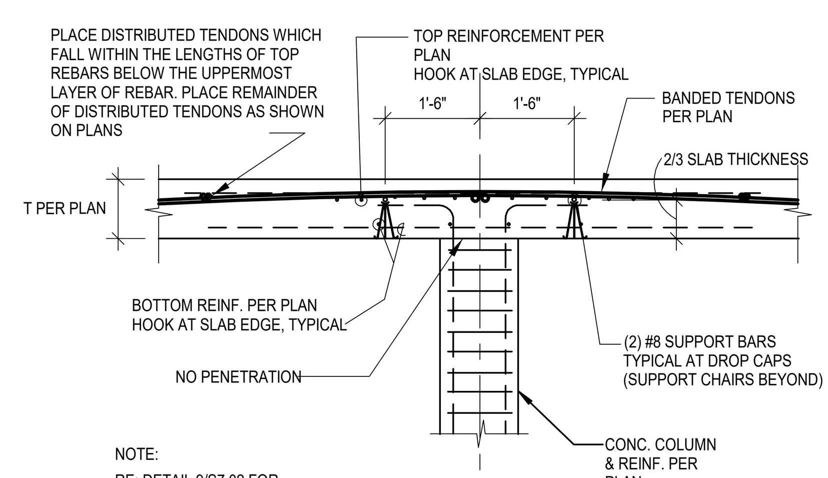

NOTE:
RE; DETAIL 9/S7.02 FOR ADDITIONAL INFO.

SCALE: 3/4" = 1'-0"

13 TYPICAL INTERIOR COLUMN SECTION

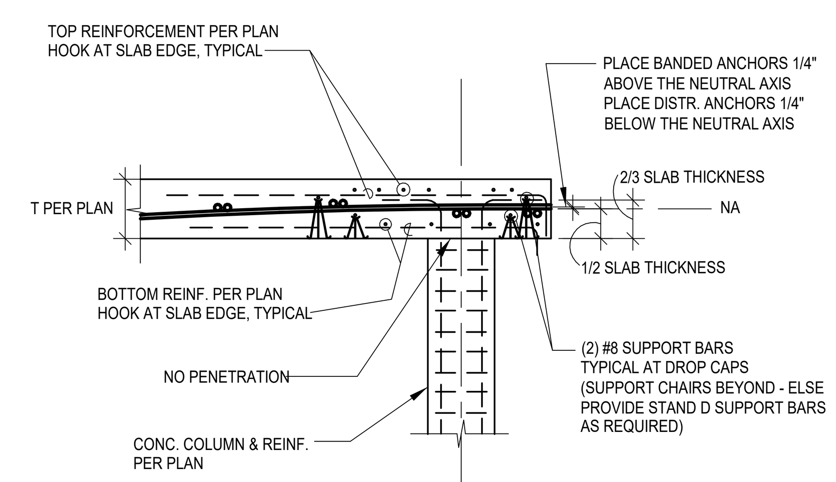

NOTE:
RE; DETAIL 10/S7.02 FOR ADDITIONAL INFO.

SCALE: 3/4" = 1'-0"

14 SECTION at CORNER COLUMN

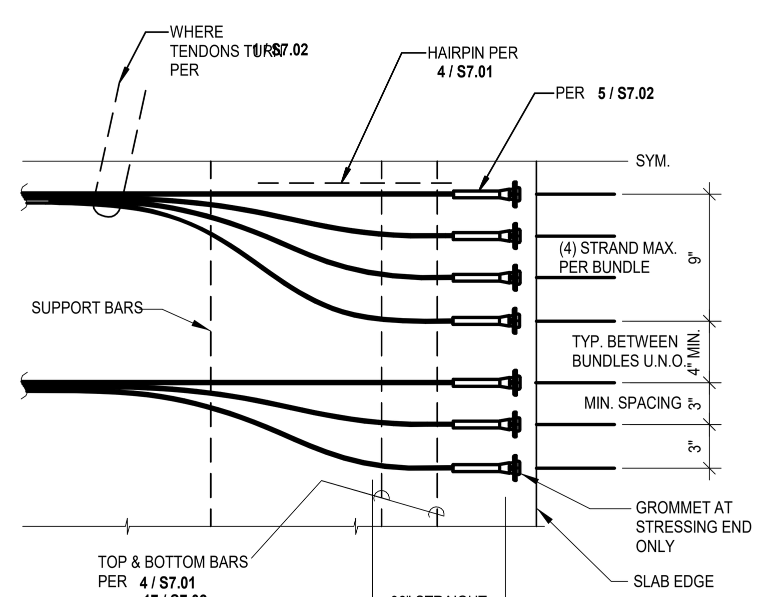

SCALE: 3/4" = 1'-0"

16 FLARING OF BANDED TENDONS at SLAB EDGE

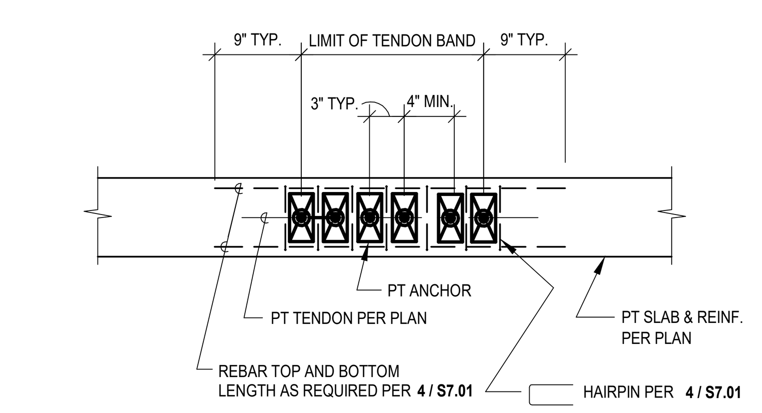

FOR SLABS 7" OR MORE IN THICKNESS

EDGE OF SLAB VIEW

SCALE: 3/4" = 1'-0"

17 REINF. OF TENDON BAND at SLAB EDGE

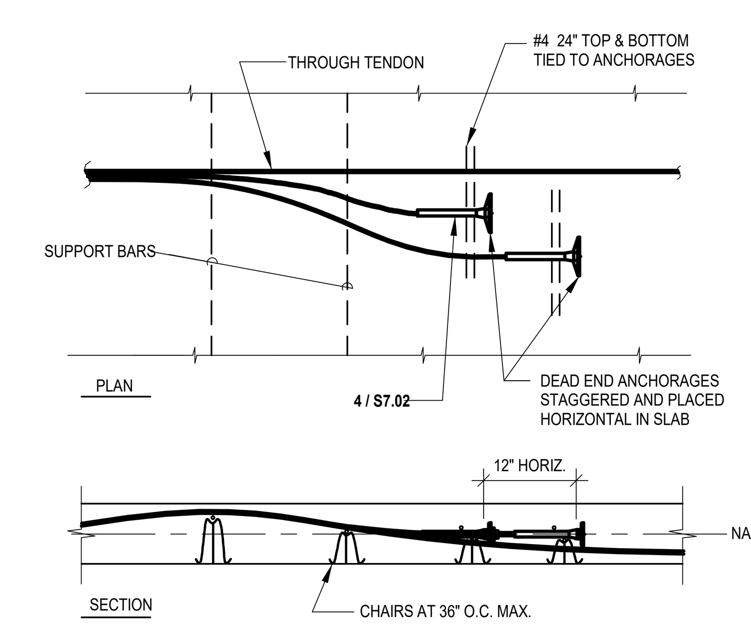

SCALE: 3/4" = 1'-0"

18 PLACEMENT OF ADDED TENDON

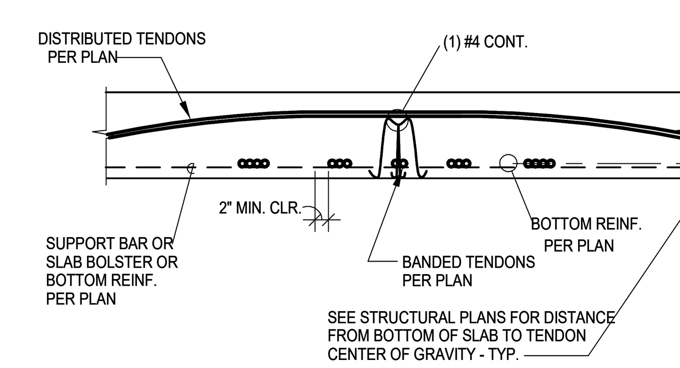

SCALE: 3/4" = 1'-0"

19 SECTION - BANDED TENDONS at MIDSPAN

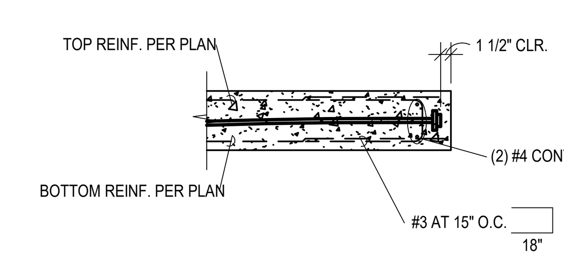

SCALE: 3/4" = 1'-0"

20 TYPICAL CANTILEVER EDGE

CT ENGINEERING INC.
Structural Engineers
180 Nickerson Street Suite 302 Seattle, WA 98109
206.285.4512 (V) 206.285.0618 (F)
www.ctengineering.com

01.21.2021

No.	REVISION	DATE

JOB #: 20021
ENG: TSW
CAD: TSW
SCALE: 3/4" = 1'-0"
KEY ISSUE DATES:
PERMIT: 01.21.2021

FOR PERMIT

PT Details

BLOSSOM APARTMENTS
214-220 5th Avenue S
Seattle, WA 98104

S7.01

C:\Users\TWandschneider\Documents\20021 - Blossom Apartments - v20_tylerw@ctengineering.com.rvt
1/21/2021 11:17:05 AM

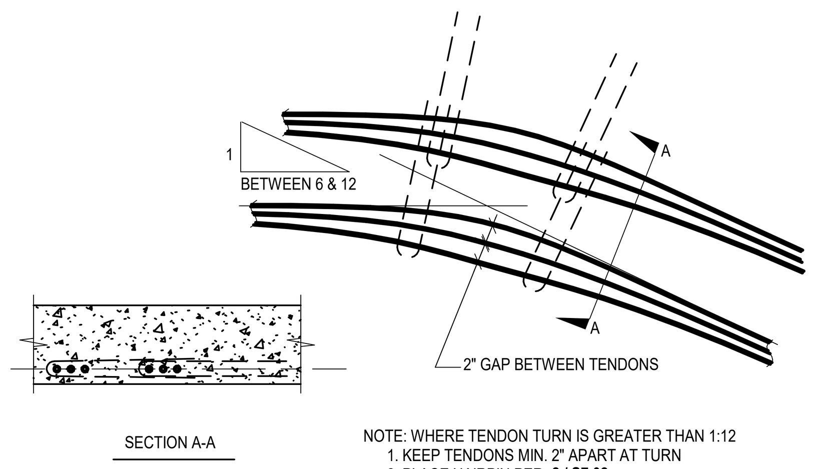

NOTE: WHERE TENDON TURN IS GREATER THAN 1:12
1. KEEP TENDONS MIN. 2" APART AT TURN
2. PLACE HAIRPIN PER **2 / S7.02**

3. MAXIMUM TENDON CURVATURE SHALL BE LESS THAN 1:6

SCALE: 3/4" = 1'-0"

1 PLACEMENT FOR TURNS GREATER THAN 1:12

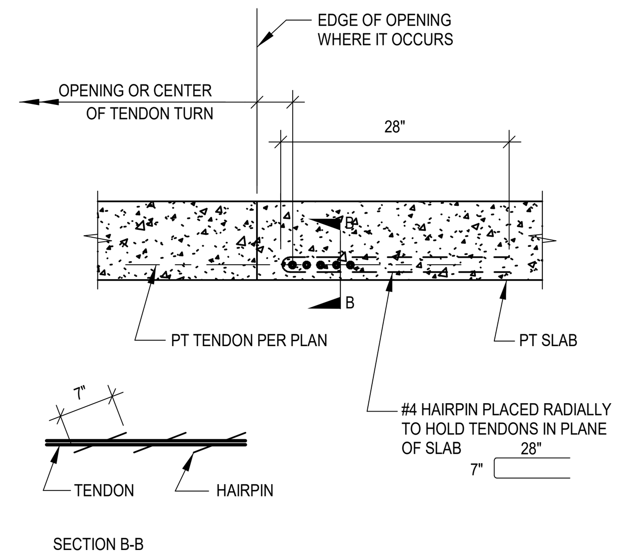

SCALE: 3/4" = 1'-0"

2 TYPICAL HAIRPIN at TENDON TURNS

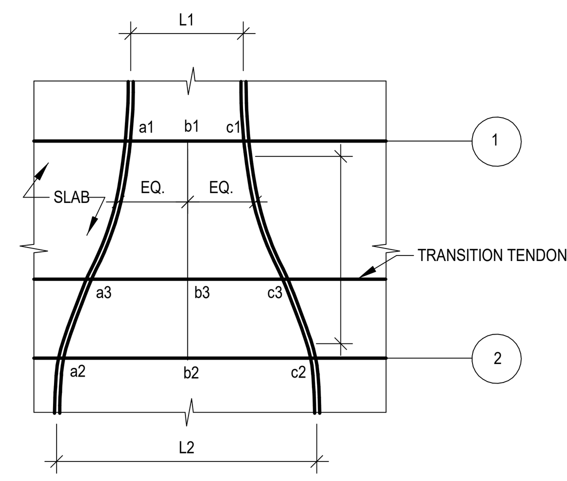

NOTE:
THE SPAN OF THE TRANSITION TENDON CHANGES FROM L1 AT LINE 1 TO L2 AT LINE 2. PLACE TRANSITION TENDON WITH ITS CONTROL POINTS a3, b3 AND c3, EACH VARYING LINEARLY FROM 1 TO 2 BETWEEN THEIR RESPECTIVE VALUES AT 1 AND 2.

SCALE: 3/4" = 1'-0"

3 PLACEMENT IN SPANS OF VARYING LENGTH

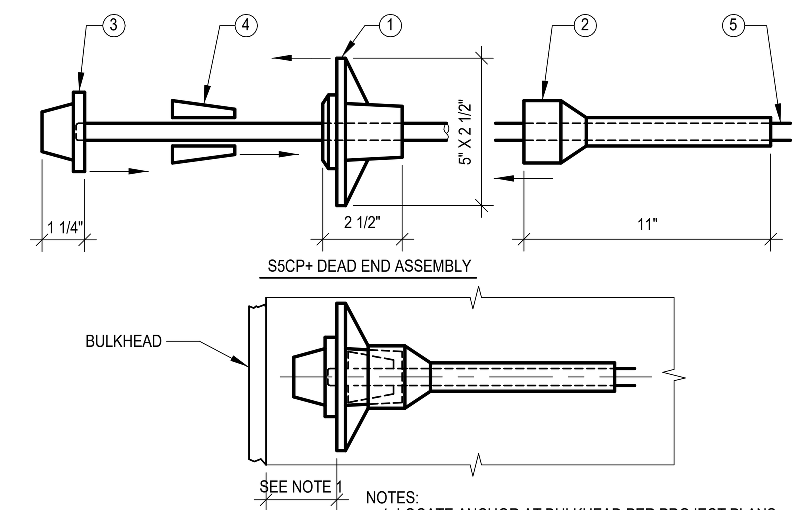

5	STRAND (GREASED AND COATED)
4	MONOWEDGES TYPE 1.5
3	END CAP S5CP+
2	PROTECTION SLEEVE S5CP+
1	ANCHORAGE S5CP+
ITEM	DESCRIPTION

NOTES:
1. LOCATE ANCHOR AT BULKHEAD PER PROJECT PLANS.
2. IF FABRICATED AT SHOP,WEDGES,GREASE CAP, AND SLEEVE SHALL BE ASSEMBLED TIGHT TO ANCHOR
3. IF FIELD SEATING IS REQUIRED, BE SURE ALL COMPONENTS ARE TIGHT TO ANCHOR, BE SURE NO BARE STRAND IS EXPOSED, TAPE IF NECESSARY

SCALE: 3/4" = 1'-0"

4 ENCAPSULATED SYSTEM at DEAD END

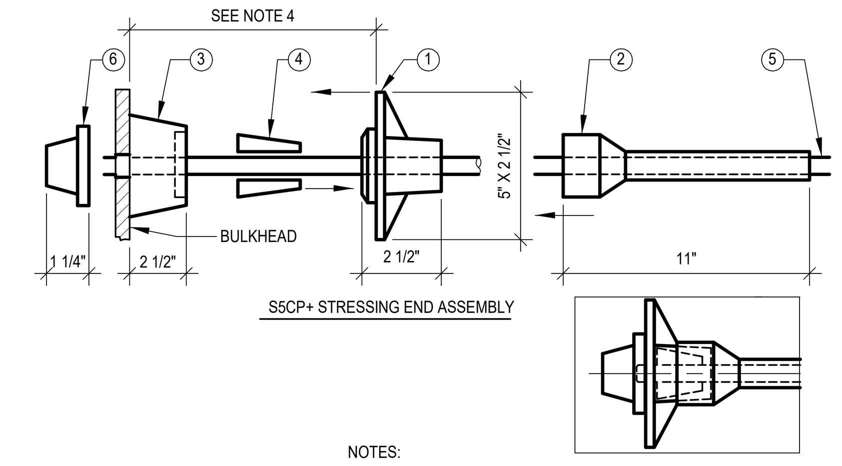

6	END CAP S5CP+
5	STRAND (GREASED AND COATED)
4	MONOWEDGES TYPE 1.5
3	GROMMET S5CP+
2	PROTECTION SLEEVE S5CP+
1	ANCHORAGE S5CP+
ITEM	DESCRIPTION

NOTES:
1. LOCATE ANCHOR AT BULKHEAD PER PROJECT PLANS
2. INSTALL GROMMET FLUSH BETWEEN BULKHEAD AND ANCHOR FOR TIGHT SEAL.
3. SLIDE SLEEVE TIGHT AGAINST ANCHOR. BE SURE NO BARE STRAND IS EXPOSED. TAPE IF NECESSARY.
4. AFTER POURING. AT TIME OF STRESSING, REMOVE GROMMET AND INSERT WEDGES.
5. AFTER STRESSING, CUT STRAND TO WITHIN 1/8" OF END OF END CAP AND GREASE END CAP PRIOR TO INSERTING IT TIGHT AGAINST ANCHOR
6. PATCH STRESSING POCKET PER PROJECT PLANS.

SCALE: 3/4" = 1'-0"

5 ENCAPSULATED SYSTEM at STRESSING END

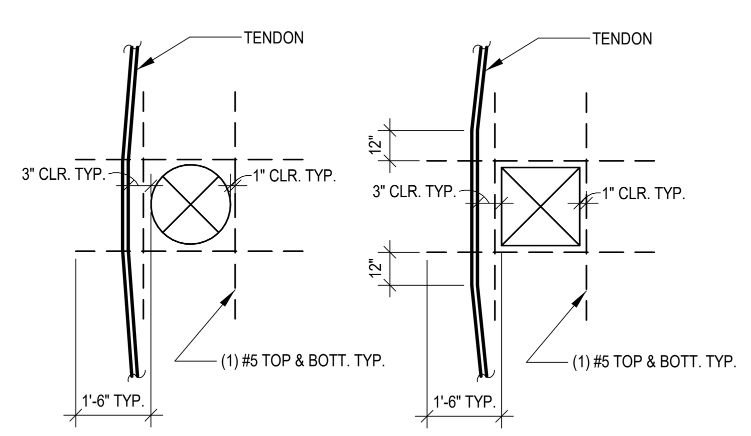

REINFORCING FOR OPENINGS IN SLAB, 0'-10" TO 2'-0"

SINGLE OPENINGS OF SMALLER DIMENSION DO NOT REQUIRE TRIM BARS.
FOR OPENINGS OF LARGER DIMENSION AND MULTIPLE OPENINGS REFER TO **7 / S7.02** **8 / S7.02**

SCALE: 3/4" = 1'-0"

6 TRIM BARS at SLAB OPENINGS

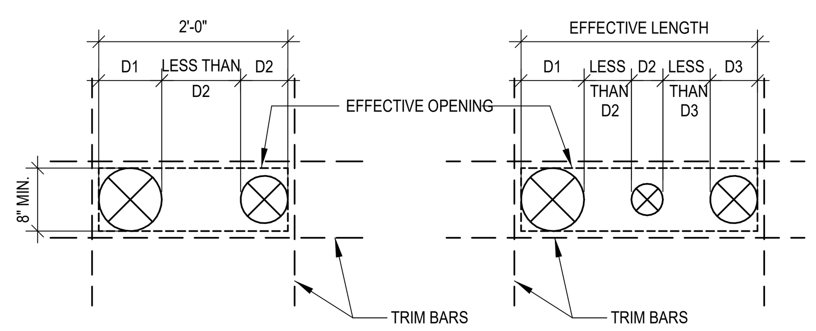

REINFORCING FOR MULTIPLE OPENINGS IN SLAB:

INSERTS IN WHICH CLEAR DISTANCE BETWEEN OPENINGS IS LESS THAN THE DIAMETER OF THE LARGER OF THE TWO ARE CONSIDERED TO FORM A COMBINED OPENING.

1. IF THE COMBINED OPENING IS LESS THAN 1'-0", NO TRIM BARS ARE REQUIRED.

2. IF THE COMBINED OPENING IS MORE THAN 1'-0", BUT LESS THAN 2'-0", PROVIDE (1) #5 T.&B. WITH 1'-0" EMBEDMENT PAST THE OPENING.

3. NO DIAGONAL BARS ARE REQUIRED.

3. IF COMBINED OPENING IS LARGER THAN 24" REFER TO **8 / S7.02**

SCALE: 3/4" = 1'-0"

7 TRIM BARS at MULTIPLE SLAB OPENINGS

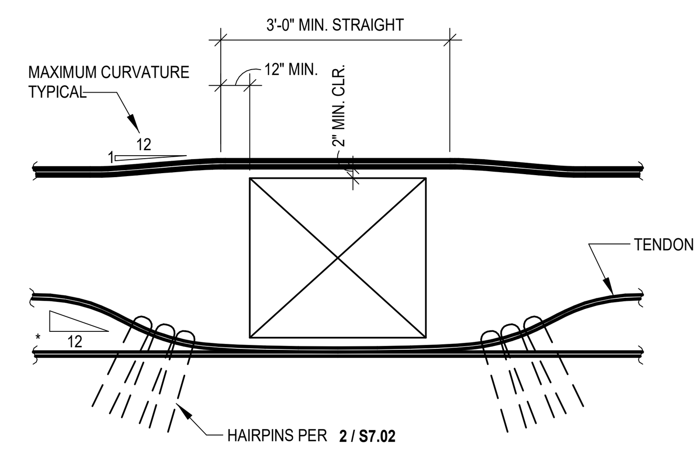

WHERE TENDON CURVATURE
* EXCEEDS 1:12 SEE **1 / S7.02**

SCALE: 3/4" = 1'-0"

8 PLACEMENT at OPENINGS 24" OR LARGER

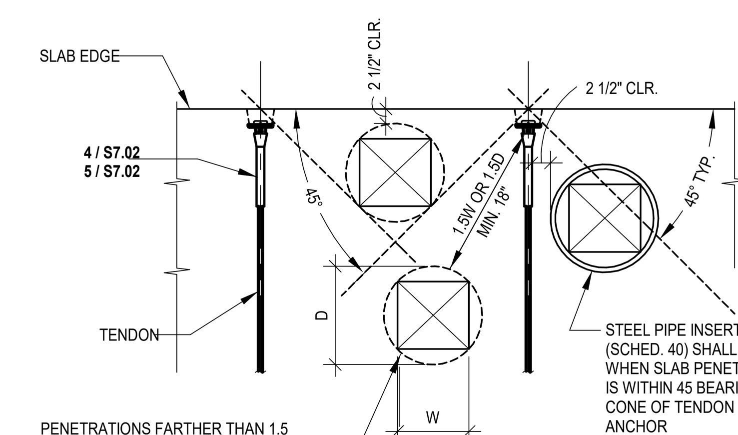

PENETRATIONS FARTHER THAN 1.5 TIMES
THE DIAMETER (D) OR WIDTH (W) BUT NOT
LESS THAN 1'-6" MIN. FROM ANCHOR, DO NOT
REQUIRE STEEL PIPE INSERTED

NOTE: PENETRATION WITH DIMENSIONS GREATER THAN 1'-0" REQUIRE TRIM REBAR PER **12 / S7.02**

SCALE: 3/4" = 1'-0"

9 OPENINGS at TENDON ANCHORAGE

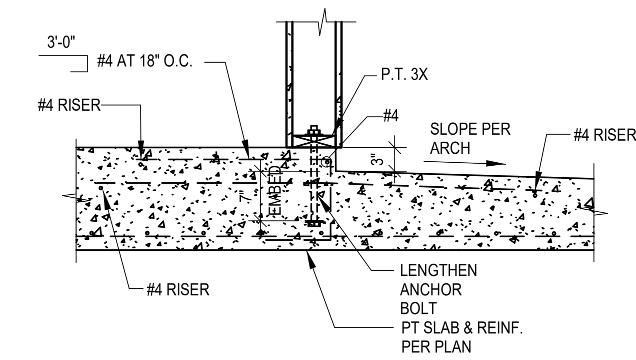

SCALE: 3/4" = 1'-0"

10 TYPICAL SECTION at SLAB STEP

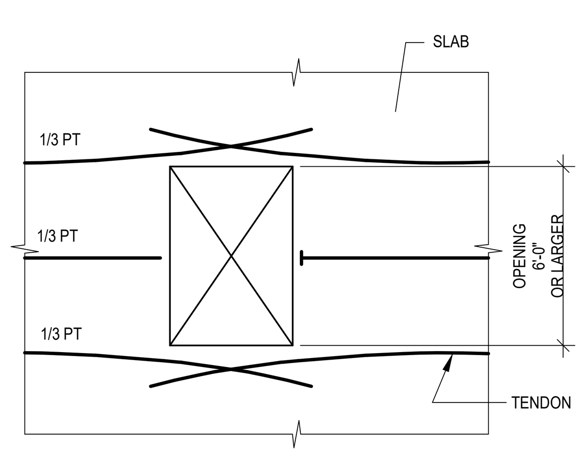

NOTE: PT IS POST-TENSIONING ASSOCIATED WITH OPENING

SCALE: 3/4" = 1'-0"

11 ARRANGEMENT at OPENINGS 6'-0" OR LARGER

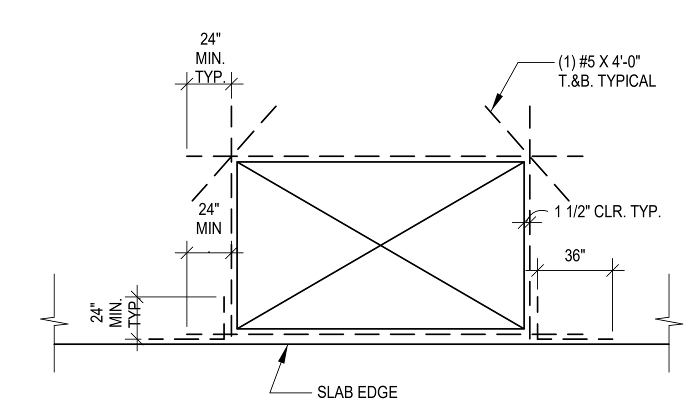

MAX. DIMENSION	REINFORCING
1'-0" TO 1'-6"	(1) #5 EACH SIDE
1'-6" TO 2'-6"	(1) #5 T.&B., EACH SIDE
2'-6" & LARGER	SEE PLAN

NOTES:
1. ALL OPENINGS LARGER THAN 1'-0" SHALL BE TRIMMED AS SHOWN
2. THESE BARS ARE IN ADDITION TO REBAR SHOWN ON PLANS
3. FOR MULTIPLE OPENINGS SEE 7 / S7.01

SCALE: 3/4" = 1'-0"

12 TRIM BARS FOR OPENINGS at SLAB EDGE

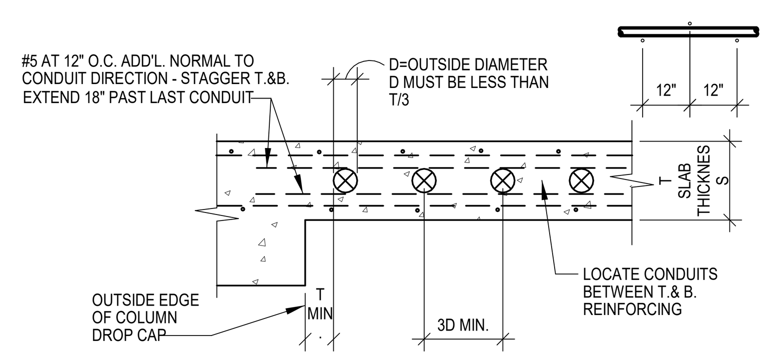

PIPES: GROUPS OF PLASTIC OR SHEET METAL ELECTRICAL CONDUITS MAY BE EMBEDDED IN THE SLAB PROVIDED THE FOLLOWING CRITERIA ARE MET:

1. DIAMETER SHALL NOT EXCEED ONE THIRD OF THE SLAB THICKNESS. (DIAMETER REFERS TO OUTSIDE DIAMETER)
2. CONDUIT.
3. -
4. REQUIREMENTS ARE FOLLOWED.
5. CONDUITS SHALL NOT INTERRUPT THE POST TENSIONING TENDONS..
6. COLUMN DROP CAP AREAS SHALL BE AVOIDED.
7. ALUMINUM EMBEDMENTS SHALL NOT BE PERMITTED.

SCALE: 3/4" = 1'-0"

13 CONDUIT GROUPS EMBEDDED IN SLAB

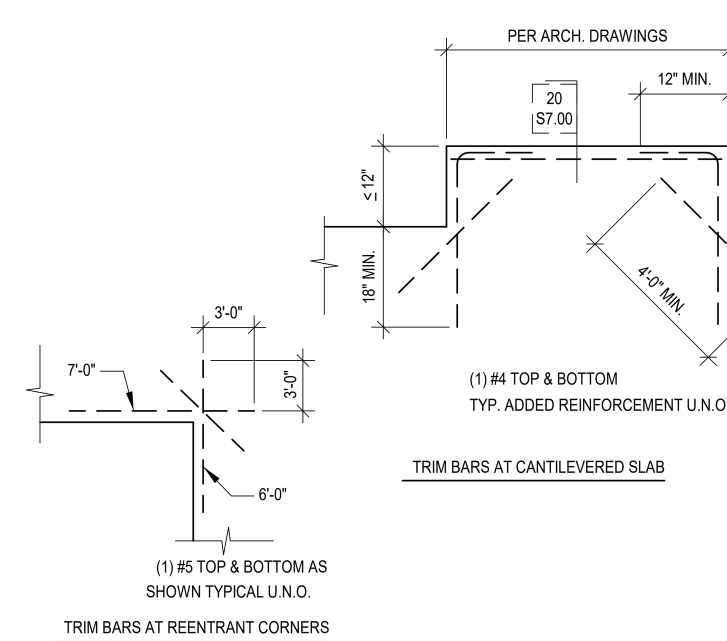

SCALE: 3/4" = 1'-0"

14 TRIM BARS at REENTRANT CORNERS & CANT.

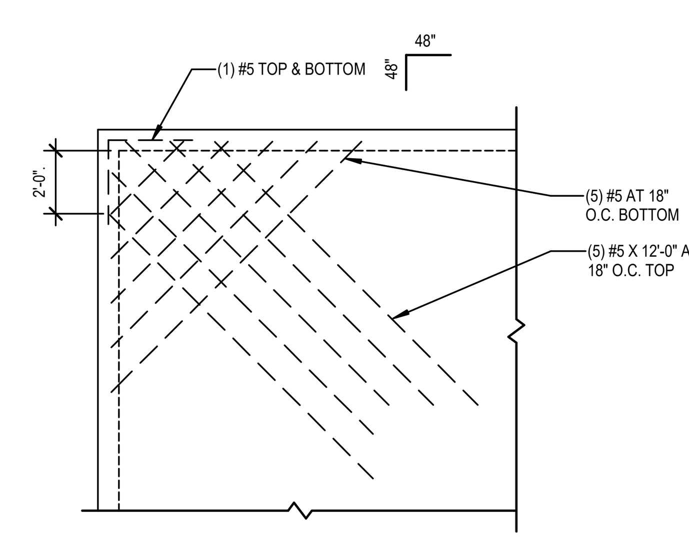

SCALE: 3/4" = 1'-0"

16 TRIM BARS at SUPPORTED SLAB EDGES

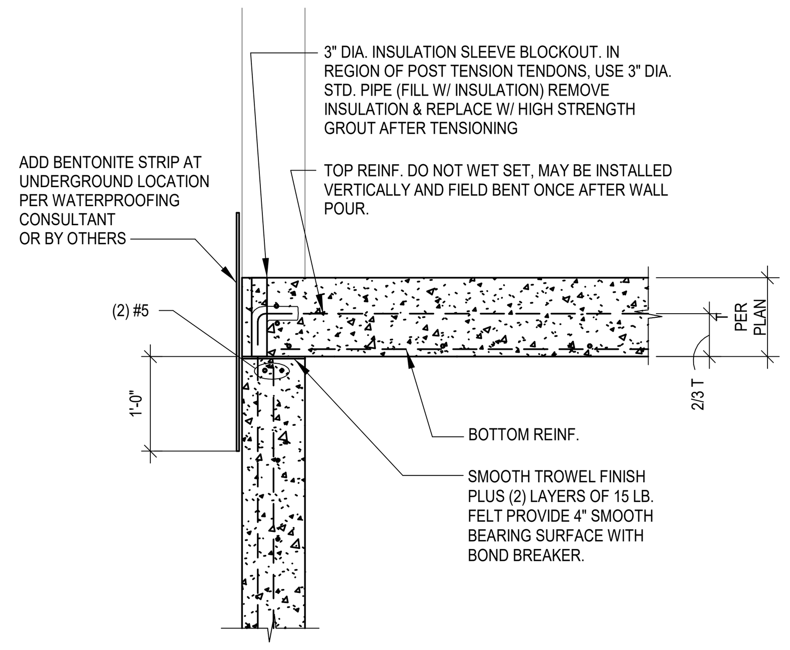

SCALE: 3/4" = 1'-0"

17 TEMPORARY RELEASE JOINT

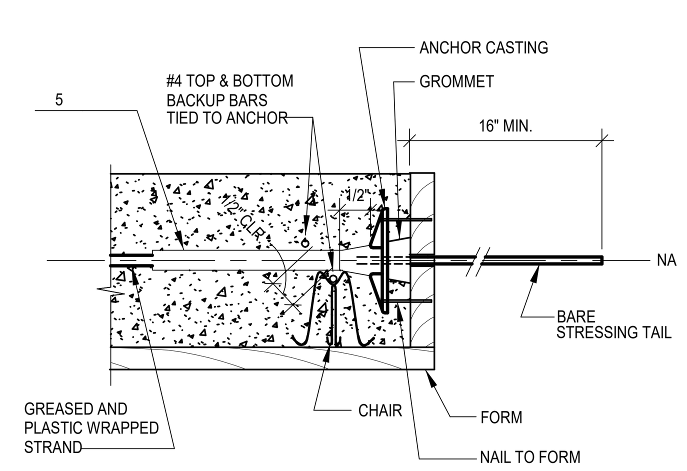

SCALE: 3/4" = 1'-0"

18 STRESSING END FOR DISTRIBUTED TENDONS

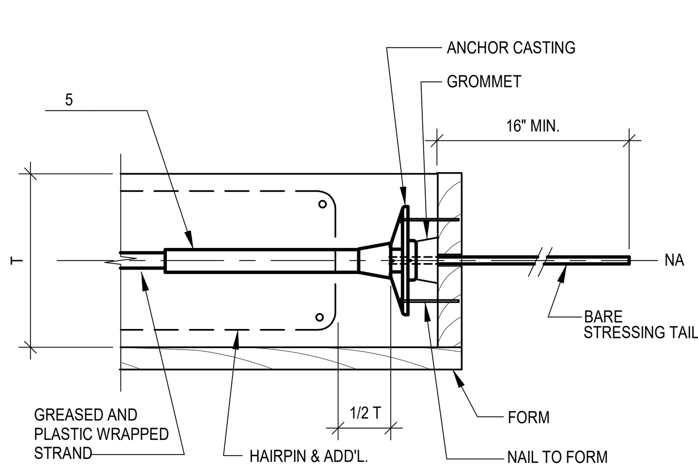

SCALE: 3/4" = 1'-0"

19 STRESSING END FOR BANDED TENDONS

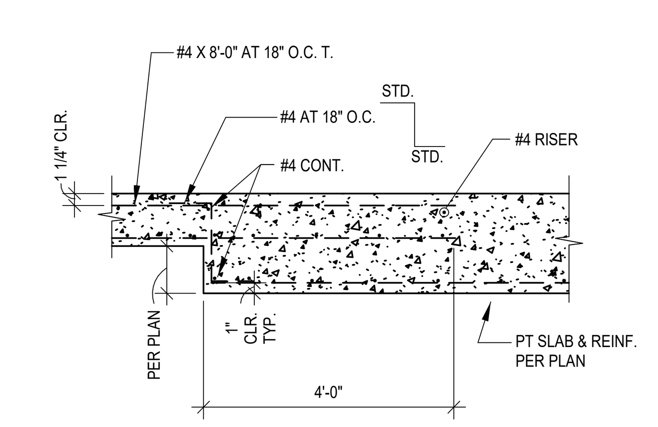

SCALE: 3/4" = 1'-0"

20 TYPICAL SECTION at SOFFIT STEP

CT ENGINEERING INC.
Structural Engineers
180 Nickerson Street Suite 302 Seattle, WA 98109
206.285.4512 (V) 206.285.0618 (F)
www.ctengineering.com

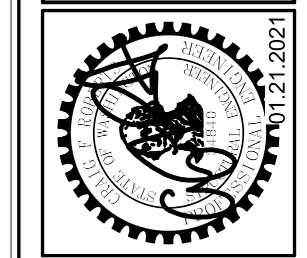

No.	REVISION	DATE

JOB #: 20021
ENG: TSW
CAD: TSW
SCALE: 3/4" = 1'-0"
KEY ISSUE DATES:
PERMIT: 01.21.2021

FOR PERMIT

PT Details
BLOSSOM APARTMENTS
214-220 5th Avenue S
Seattle, WA 98104

S7.02

C:\Users\TWandschneider\Documents\20021 - Blossom Apartments - v20_tylerw@ctengineering.com.rvt
1/21/2021 11:17:08 AM

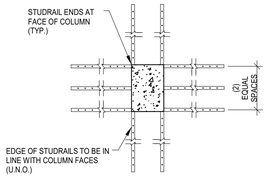

SCALE: 3/4" = 1'-0"

1 STUDRAIL CONFIGURATION A (SR-A)

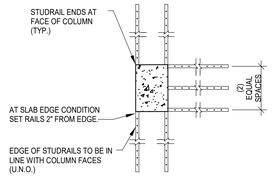

SCALE: 3/4" = 1'-0"

2 STUDRAIL CONFIGURATION B (SR-B)

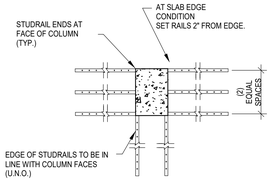

SCALE: 3/4" = 1'-0"

3 STUDRAIL CONFIGURATION C (SR-C)

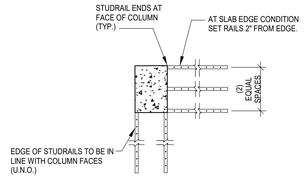

SCALE: 3/4" = 1'-0"

4 STUDRAIL CONFIGURATION D (SR-D)

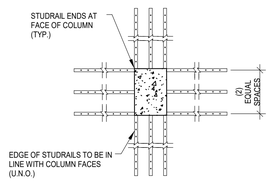

SCALE: 3/4" = 1'-0"

5 STUDRAIL CONFIGURATION A (SR-E)

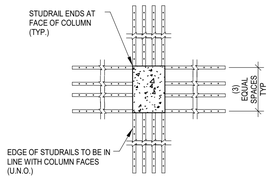

SCALE: 3/4" = 1'-0"

6 STUDRAIL CONFIGURATION A (SR-F)

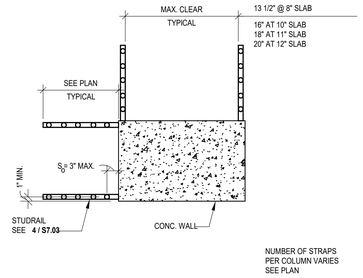

SCALE: 3/4" = 1'-0"

7 STUDRAIL LOCATION TO COLUMN

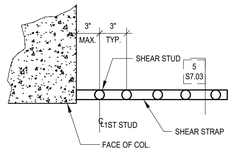

SCALE: 3/4" = 1'-0"

8 SHEAR STRAP DETAIL

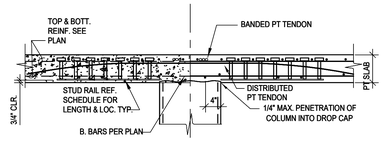

NOTES:
1. A MIN. OF (2) TENDONS TO PASS DIRECTLY OVER COLUMN EACH WAY.
2. TOP BARS PARALLEL TO BANDED PT TENDONS TO BE PLACED AT THE UPPERMOST LAYER, U.N.O.

SCALE: 3/4" = 1'-0"

9 SECTION

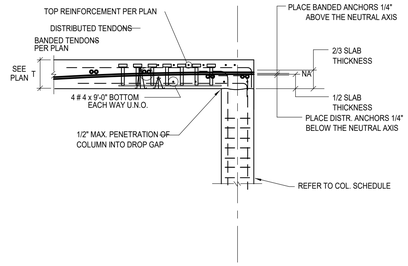

SCALE: 3/4" = 1'-0"

10 SECTION

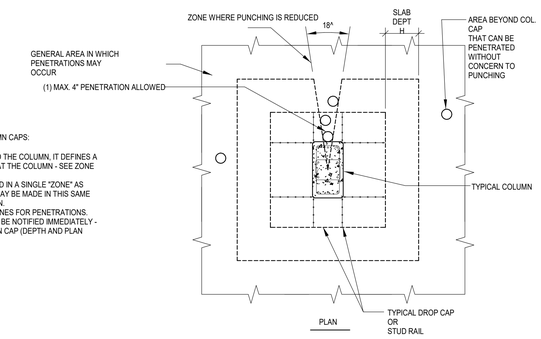

GENERAL NOTES ABOUT PENETRATIONS AT COLUMN CAPS:

1. WHERE PENETRATIONS ARE MADE ADJACENT TO THE COLUMN, IT DEFINES A "ZONE" THAT REDUCES THE PUNCHING CAPACITY AT THE COLUMN - SEE ZONE DEFINED BY AN 18° ANGLE.
2. ADJACENT TO ANY COLUMN MAY BE PENETRATED IN A SINGLE "ZONE" AS SHOWN. NOTE THAT ADDITIONAL PENETRATIONS MAY BE MADE IN THIS SAME ZONE, SPACED FURTHER AWAY FROM THE COLUMN.
3. NO COLUMN CAP SHALL HAVE TWO OR MORE ZONES FOR PENETRATIONS. SHOULD THIS BE REQUIRED, THE ENGINEER SHALL BE NOTIFIED IMMEDIATELY - AND PRIOR TO CONSTRUCTION. A LARGER COLUMN CAP (DEPTH AND PLAN AREA) WILL LIKELY BE SPECIFIED.

SCALE: 3/4" = 1'-0"

12 SINGLE PENETRATION at COLUMNS W/ STUDRAILS

STUDRAIL SCHEDULE

SLAB THICKNESS	So	S
8"	2 1/4"	2 3/4"
9"	3"	3 1/4"
10"	3 1/8"	3 3/4"
12"	4"	4"
14"	4 1/4"	4 1/2"

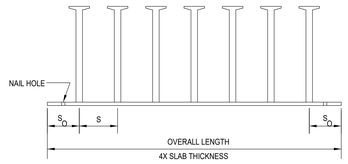

SHEAR REINFORCEMENT (STUD RAILS)
SHEAR REINFORCEMENT AT THE SLAB COLUMN CONNECTION, AS SHOWN ON THE DRAWINGS AND DETAILS SHALL BE STUDRAILS AS MANUFACTURED BY DECON (ICC ESR 2494). THE SHEAR STUDS USED IN FABRICATION SHALL BE LOW CARBON STEEL, FORMED IN ACCORDANCE WITH ASTM A-108 GRADES 1010 THROUGH 1020. THE STRENGTH AND DUCTILITY REQUIREMENTS ARE:

YIELD STRENGTH: 51,000 PSI MIN.
TENSILE STRENGTH: 65,000 PSI MIN.
ELONGATION IN 2 IN: 20% MIN.
REDUCTION IN AREA: 50% MIN.

THE RAIL USED IN STUD RAILS SHALL BE LOW CARBON STEEL CSA 44W.

YIELD STRENGTH: 44,000 PSI MIN.
TENSILE STRENGTH: 65,000 PSI MIN.
ELONGATION IN 8 IN.: 20%

THE STUDS SHALL BE WELDED IN ACCORDANCE WITH AWS D1.1.

SCALE: 3/4" = 1'-0"

19 STUDRAIL ELEVATION

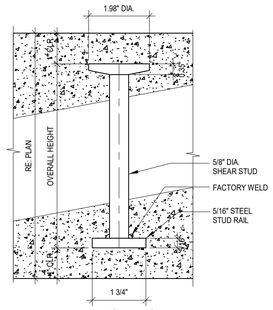

5/8" STUDS

SCALE: 6" = 1'-0"

15 SHEAR STUD TO RAIL CONNECTION

CT ENGINEERING INC.
Structural Engineers
160 Nickerson Street Suite 302 Seattle, WA 98109
206.282.4512 (V) 206.285.0618 (F)
www.ctengineering.com

01.21.2021

No.	REVISION	DATE

JOB #: 20021
ENG: TSW
CAD: TSW
SCALE: As indicated
KEY ISSUE DATES:
PERMIT: 01.21.2021

FOR PERMIT

PT Details
BLOSSOM APARTMENTS
214-220 5th Avenue S
Seattle, WA 98104

S7.03

C:\Users\TWebster\Desktop\Documents\20021 - Blossom Apartments - v20_tswebster@ctengineering.com.rvt

1/21/2021 11:17:10 AM

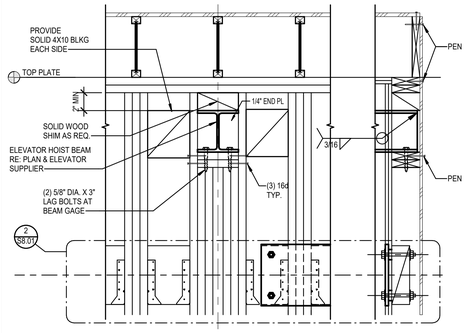

SCALE: 1" = 1'-0"

1 DETAIL AT HOIST BEAM

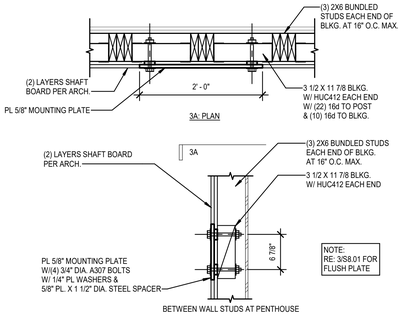

SCALE: 1" = 1'-0"

2 SECTION AT GUIDE RAIL SUPPORT

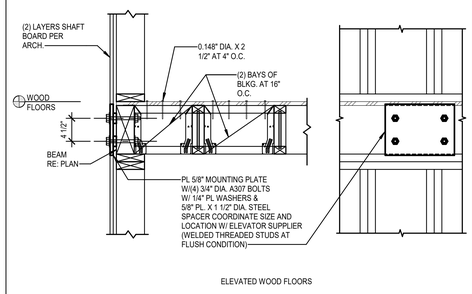

SCALE: 1" = 1'-0"

3 GUIDE RAIL SUPPORT AT RIM BEAM

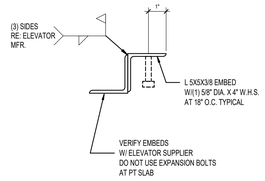

SCALE: 1/2" = 1'-0"

4 DETAIL

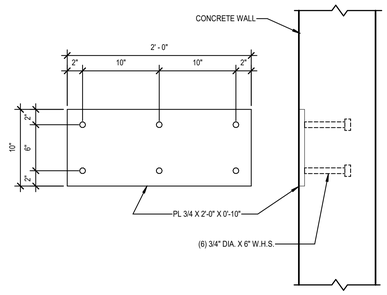

SCALE: 1 1/2" = 1'-0"

5 SECTION AT GUIDERAIL SUPPORT

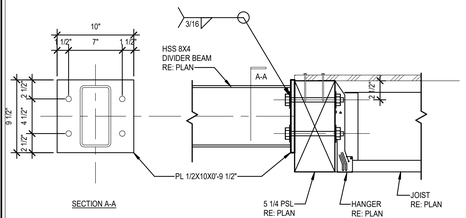

SCALE: 1 1/2" = 1'-0"

6 SECTION

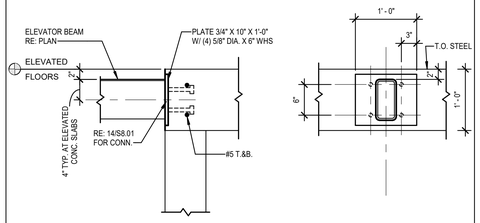

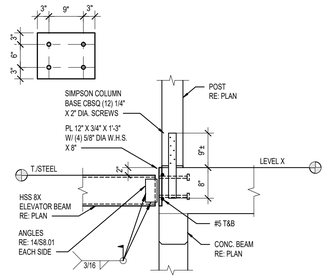

SCALE: 3/4" = 1'-0"

10 SECTION

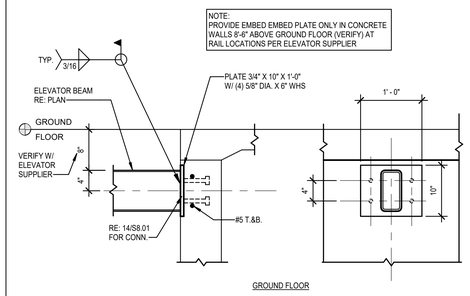

SCALE: 1" = 1'-0"

13 ELEVATOR BEAM AT CONCRETE

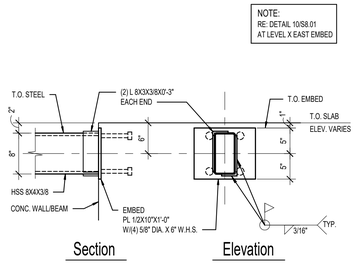

SCALE: 1/2" = 1'-0"

14 ELEVATOR BEAM CONNECTION

CT ENGINEERING INC.
Structural Engineers
160 Nickerson Street Suite 302 Seattle, WA 98109
206.285.4512 (V) 206.285.0618 (F)
www.ctengineering.com

01.21.2021

No.	REVISION	DATE

JOB #: 20021
ENG: TSW
CAD: TSW
SCALE: As indicated
KEY ISSUE DATES:
PERMIT: 01.21.2021

FOR PERMIT

Typical Elevator Steel Details

BLOSSOM APARTMENTS
214-220 5th Avenue S
Seattle, WA 98104

S8.01

C:\Users\TSW\appdata\roaming\autodesk\revit\2020\21 - Blossom Apartments - v20_tsw.rvt\ctengineering.com.rvt
1/21/2021 11:17:13 AM

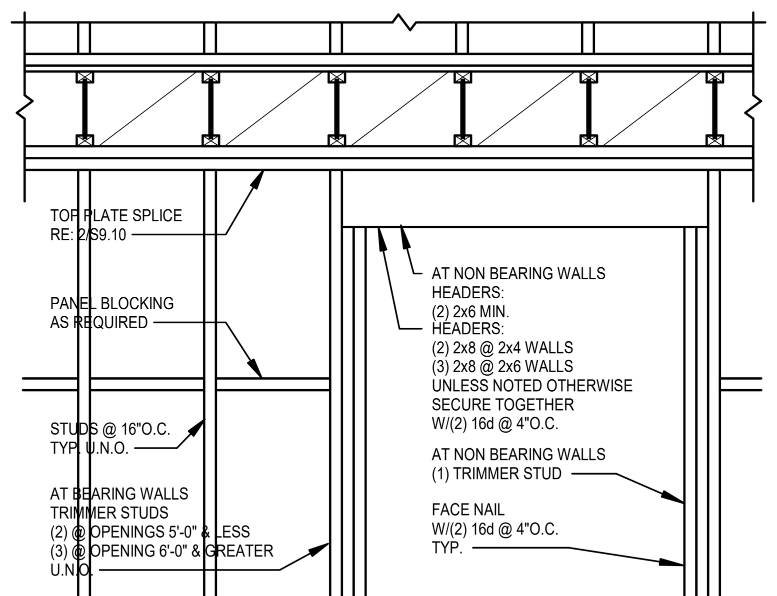

SCALE: 3/4" = 1'-0"

1 TYPICAL HEADER AT WALL

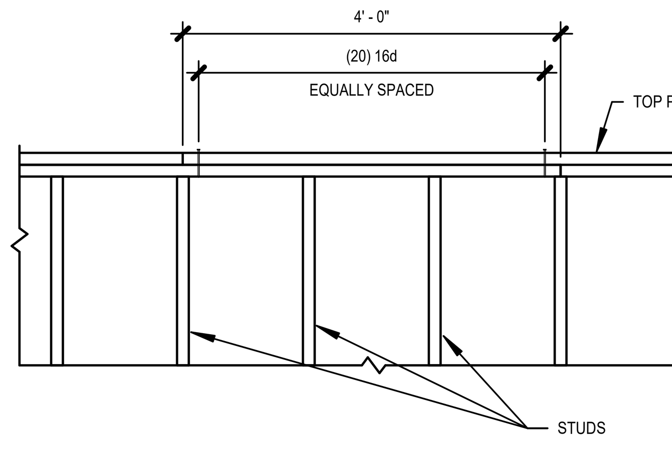

TOP PLATE SPLICE NOTES:
1. SPLICE AND NAIL TOP PLATES SHOWN AT ALL EXTERIOR, PLUMBING, PARTY AND SHEAR WALLS AT EACH FLOOR LEVEL AND AT ROOF.
2. PROVIDE (2) LSTA 36 STRAP W/(26) 0.148" DIA. X 2 1/2" NAILS ONE EACH SIDE WHERE DRILLED HOLES EXCEED THE FOLLOWING:
   1" FOR 2x4 WALL PLATES
   3" FOR 2x6 WALL PLATES, CENTER ALL HOLES MIN.
3. MINIMUM EDGE DISTANCE = 1 1/4".

SCALE: 3/4" = 1'-0"

2 TYPICAL TOP PLATE SPLICE

NOTE: SEE ARCH. FOR STAIR DIMENSIONS AND BLOCKING REQUIREMENTS.

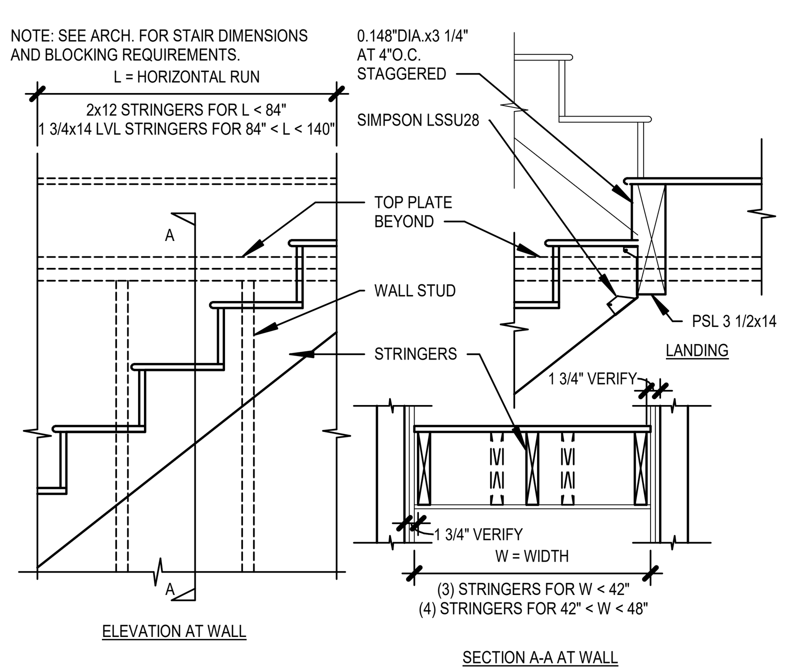

SCALE: 3/4" = 1'-0"

3 TYPICAL STAIR FRAMING AT WALL

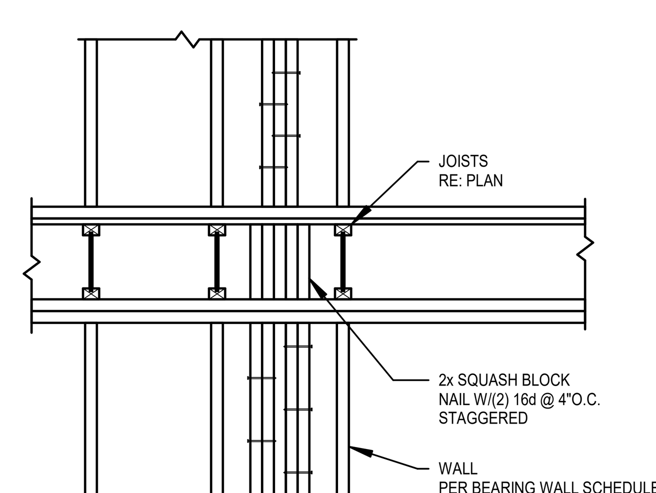

SCALE: 3/4" = 1'-0"

4 TYPICAL BLOCKING AT BUNDLED STUD

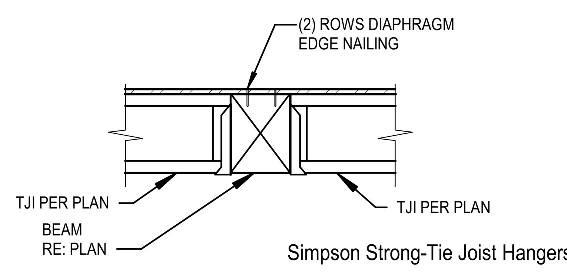

Simpson Strong-Tie Joist Hangers

TJI SIZE	HANGER	NAILING
11 7/8" TJI	ITS11.88	TOP (4) 0.148" DIA. X 3" FACE (2) 0.148" DIA. X 3" JOIST *
(2)11 7/8" TJI	MIT11.88	TOP (4) 0.162" DIA. X 3 1/2" FACE (4) 0.162" DIA. X 3 1/2" JOIST (2) 0.148" DIA. X 1 1/2"
2 X 8	HUS26	FACE (14) 0.162" DIA. X 3 1/2" JOIST (6) 0.162" DIA. X 3 1/2"

* AT ROOF AND HIGH ROOF ADD (4) 0.148" DIA. X 1 1/2" IN TRIANGLE HOLES TO JOIST WEB STIFFENERS.

CONNECTOR NOTES:
1. NAIL THE TJI'S SPECIAL BEN-TAB W/10d X 1 1/2 NAILS INTO THE BOTTOM FLANGE OF THE JOIST.

2. JOIST SHALL BEAR COMPLETELY ON THE CONNECTOR SEAT. THE GAP BETWEEN THE JOIST END AND THE HEADER SHALL NOT EXCEED 1/8".

3. HANGER WIDTH SHALL MATCH JOIST FLANGE.

SCALE: 3/4" = 1'-0"

6 TYPICAL CONNECTION at WOOD BEAM

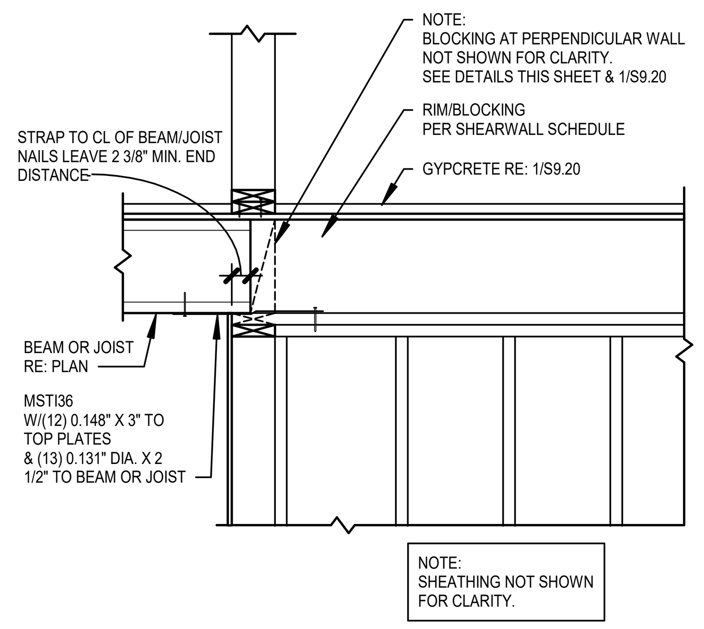

SCALE: 3/4" = 1'-0"

7 TYPICAL SHEARWALL STRAP

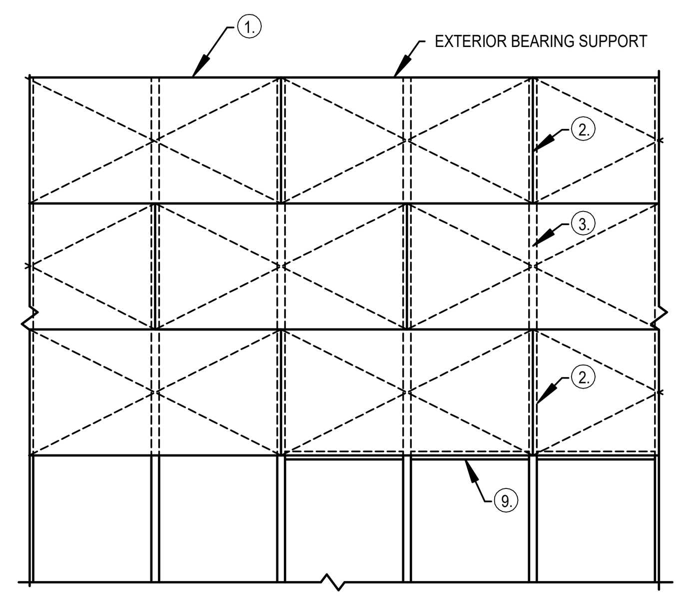

ROOF/FLOOR SHEATHING NOTES:
1. BOUNDARY NAILING (B.N.) AT ROOF/FLOOR PERIMETER, AT ALL CONTINUOUS PANEL EDGES.
2. EDGE NAILING (P.E.N.) AT ALL EDGES OF ALL PLYWOOD SHEETS AT SUPPORTS AND AT INTERIOR SHEARWALLS
3. INTERIOR FIELD NAILING (F.N.) 12"O.C. AT ALL BEARING SUPPORTS.
4. SEE PLANS FOR PLYWOOD THICKNESS AND NAILING SCHEDULE.
5. LONG DIMENSION OF PLYWOOD SHALL RUN PERPENDICULAR TO TRUSS SYSTEM FRAMING AND FLOOR FRAMING\
6. MINIMUM EDGE DISTANCE FOR NAILS SHALL BE 3/8".
7. MINIMUM PLYWOOD SHEET SIZE SHALL BE 2'-0" X 4'-0".
8. NAILS SHALL NOT BE OVER DRIVEN
9. WHERE NOTE AS "BLOCKED DIAPHRAGM" ALL PANEL EDGES SHALL BE SUPPORTED AND FASTENED WITH PANEL EDGE NAILING (PEN), RE: PLAN AND 14/S9.10

SCALE: 3/4" = 1'-0"

8 ROOF/FLOOR SHEATHING LAYOUT

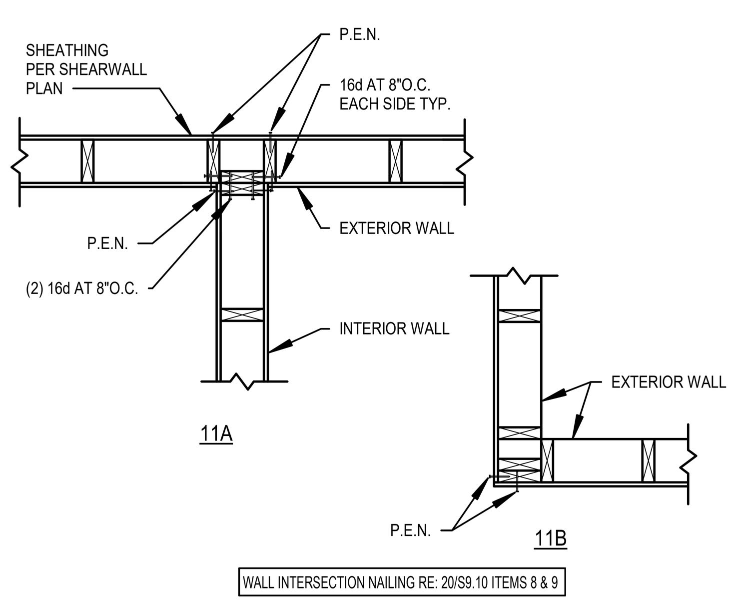

WALL INTERSECTION NAILING RE: 20/S9.10 ITEMS 8 & 9

SCALE: 3/4" = 1'-0"

11 PLAN VIEW

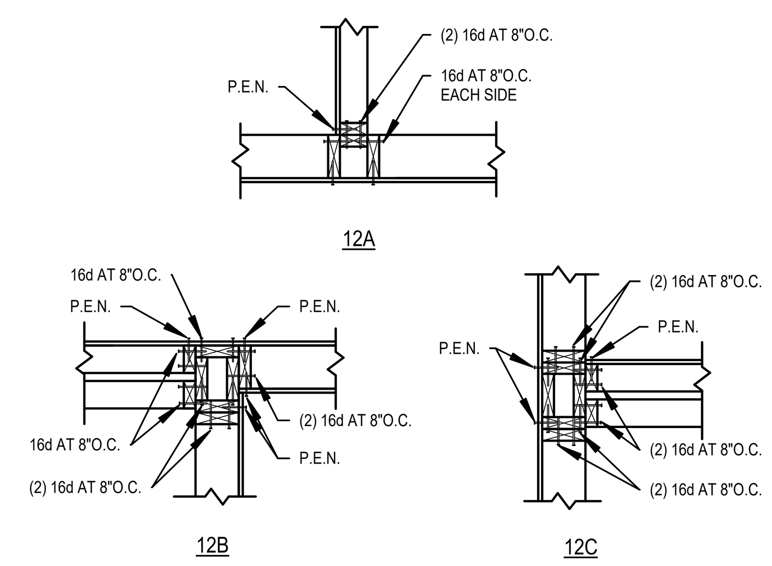

WALL INTERSECTION NAILING RE: 20/S9.10 ITEMS 8 & 9

SCALE: 3/4" = 1'-0"

12 PLAN VIEW

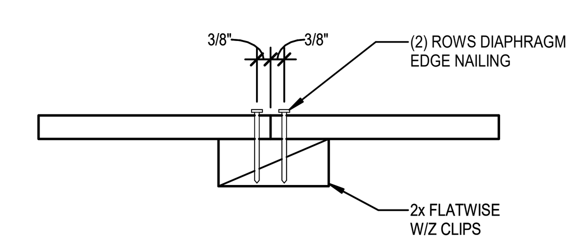

SCALE: 3" = 1'-0"

14 BLOCKING DETAIL

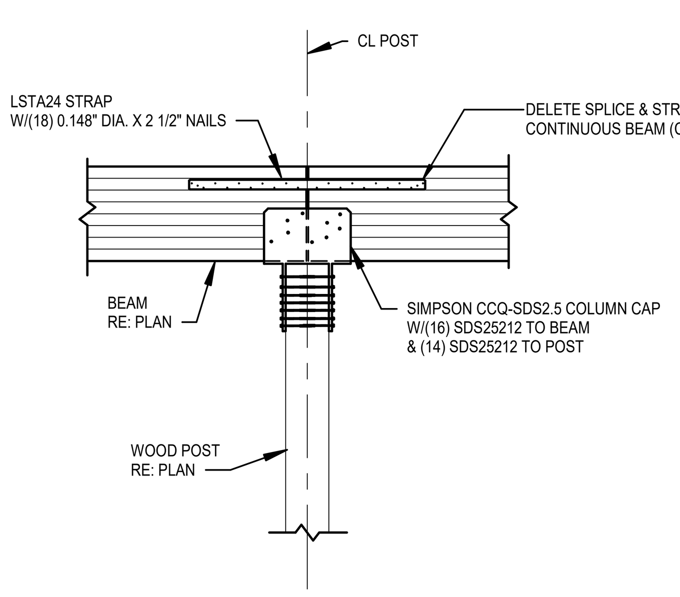

SCALE: 3/4" = 1'-0"

16 TYPICAL BEAM TO POST CONNECTION

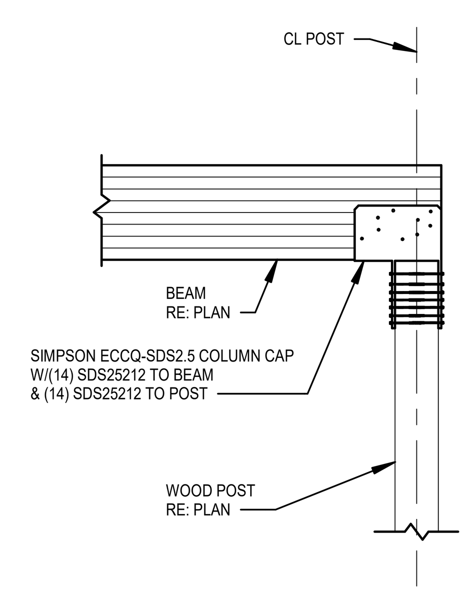

SCALE: 3/4" = 1'-0"

17 TYPICAL BEAM TO POST CONNECTION

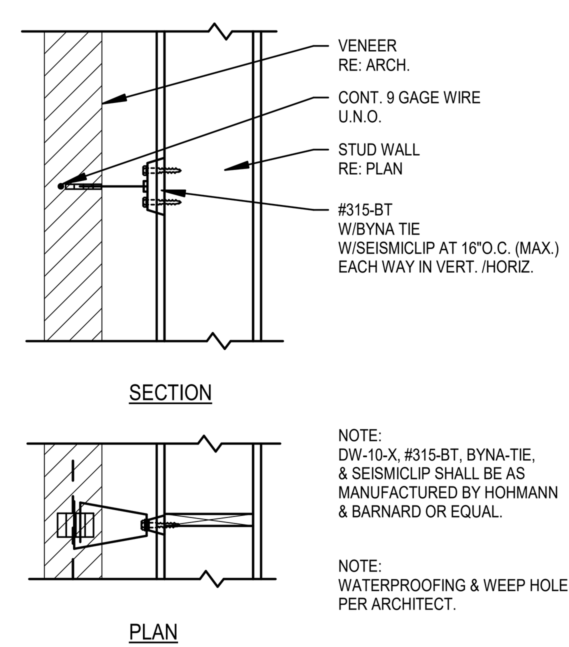

NOTE:
DW-10-X, #315-BT, BYNA-TIE, & SEISMICLIP SHALL BE AS MANUFACTURED BY HOHMANN & BARNARD OR EQUAL.

NOTE:
WATERPROOFING & WEEP HOLES PER ARCHITECT.

SCALE: 3/4" = 1'-0"

18 TYPICAL VENEER ATTACHMENT

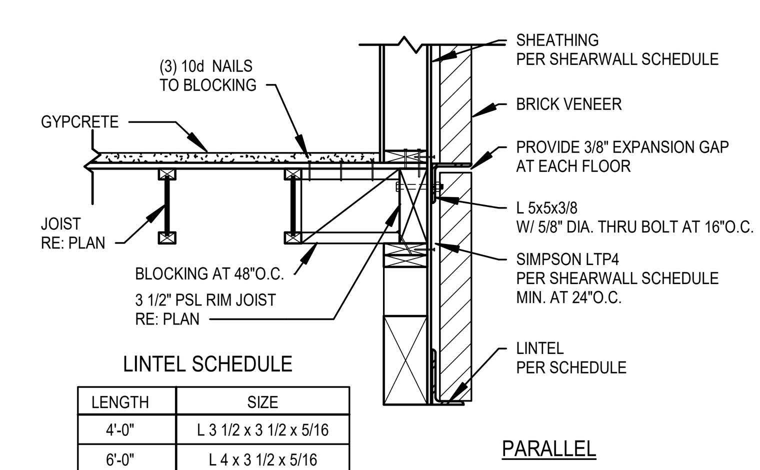

LINTEL SCHEDULE

LENGTH	SIZE
4'-0"	L 3 1/2 x 3 1/2 x 5/16
6'-0"	L 4 x 3 1/2 x 5/16
8'-0"	L 5 X 3 1/2 X 5/16
10'-0"	L 6 x 3 1/2 x 5/16
12'-0"	L 6 x 3 1/2 x 1/2
14'-0"	L 6 x 3 1/2 x 1/2
16'-0"	L 7 x 4 1/2

NOTE: MIN. 6" BEARING REQUIRED

SCALE: 3/4" = 1'-0"

19 TYPICAL BRICK VENEER ATTACHMENT

IBC 2015 TABLE 2304.10.1 FASTENING SCHEDULE

CONNECTION (a)	FASTENING	LOCATION
ROOF		
1. BLOCKING BETWEEN CEILING JOISTS,RAFTERS OR TRUSSES TO TOP PLATE OR OTHER FRAMING BELOW	(3) 8d COMMON (2 1/2" X 0.131"); OR (3) 3" X 0.131" NAILS	EACH END, TOENAIL
BLOCKING BETWEEN RAFTERS OR TRUSSES NOT AT THE WALL TOP PLATE, TO RAFTER OR TRUSS	(2) 8d COMMON (2 1/2" X 0.131") (2) 3" X 0.131" NAILS	EACH END, TOENAIL
BLOCKING BETWEEN RAFTERS OR TRUSSES NOT AT THE WALL TOP PLATE, TO RAFTER OR TRUSS	(2) 16d COMMON (3 1/2" X 0.162") (3) 3" X 0.131" NAILS	EACH END
FLAT BLOCKING TO TRUSS AND WEB FILLER	16d COMMON (3 1/2" X 0.161") AT 6"OC 3" X 0.131" NAILS AT 6"OC	FACE NAIL
2. CEILING JOISTS TO TOP PLATE	(3) 8d COMMON (3 1/2" X 0.131"); OR (3) 3" X 0.131" NAILS	EACH JOIST, TOENAIL
3. CEILING JOIST NOT ATTACHED TO PARALLEL RAFTER, LAPS OVER PARTITIONS (NO THRUST) (SEE SECTION 2308.7.3.1, TABLE 2308.7.3.1)	(3) 16d COMMON (3 1/2" X 0.162"); OR (4) 3" X 0.131" NAILS	FACE NAIL
4. CEILING JOIST ATTACHED TO PARALLEL RAFTER (HEEL JOINT) (SEE SECTION 2308.7.3.1, TABLE 2308.7.3.1)	PER TABLE 2308.7.3.1	FACE NAIL
5. COLLAR TIE TO RAFTER	(3) 10d COMMON (3" X 0.148"); OR (4) 3" X 0.131" NAILS	FACE NAIL
6. RAFTER OR ROOF TRUSS TO TOP PLATE (SEE SECTION 2308.7.5, TABLE 2308.7.5)	(3) 10d COMMON (3" X 0.148");OR (4) 3" X 0.131" NAILS	TOENAIL
7. ROOF RAFTERS TO RIDGE VALLEY OR HIP RAFTERS; OR ROOF RAFTER TO 2-INCH RIDGE BEAM	(2) 16d COMMON (3 1/2" X 0.162");OR (3) 3" X 0.131" NAILS	END NAIL
WALL		
8. STUD TO STUD (NOT AT BRACED WALL PANELS)	16d COMMON (3 1/2" X 0.162") (2) 3" X 0.148" NAILS	8"OC FACE NAIL 8"OC FACE NAIL
9. STUD TO STUD AND ABUTTING STUDS (AT INTERSECTING WALL CORNERS) (AT BRACED WALL PANELS)	16d COMMON (3 1/2" X 0.162")	8"OC FACE NAIL
10. BUILT-UP HEADER (2" TO 2" HEADER)	16d COMMON (3 1/2" X 0.162")	8"OC EACH EDGE, FACE NAIL
11. CONTINUOUS HEADER TO STUD	(4) 8d COMMON (2 1/2" X 0.131")	TOENAIL
12. TOP PLATE TO TOP PLATE	16d COMMON (3 1/2" X 0.162") OR 3" X 0.131" NAILS	16"OC FACE NAIL 12"OC FACE NAIL
13. TOP PLATE TO TOP PLATE, AT END JOINTS	(8) 16d COMMON (3 1/2" X 0.162") OR (12) 3" X 0.131" NAILS	EACH SIDE OF END JOINT, FACE NAIL (MINIMUM 24" LAP SPLICE LENGTH EACH SIDE OF END JOINT)
14. BOTTOM PLATE TO JOIST, RIM JOIST, BAND JOIST OR BLOCKING (NOT AT BRACED WALL PANELS)	16d COMMON (3 1/2" X 0.162"); OR 3" X 0.131" NAILS	16"OC FACE NAIL 12"OC FACE NAIL
15. BOTTOM PLATE TO JOIST, RIM JOIST, BAND JOIST OR BLOCKING AT BRACED WALLO PANELS	(2) 16d COMMON (3 1/2" X 0.162"); OR (4) 3" X 0.131" NAILS	16"OC FACE NAIL
16. STUD TO TOP OR BOTTOM PLATE	(4) 8d COMMON (2 1/2" X 0.131"); OR (3) 3" X 0.131" NAILS	TOENAIL
STUD TO TOP OR BOTTOM PLATE	(2) 16d COMMON (3 1/2" X 0.162"); OR (3) 3" X 0.131" NAILS	END NAIL
17. TOP OT BOTTOM PLATE TO STUD	(2) 16d COMMON (3 1/2" X 0.162"); OR (3) 3" X 0.131" NAILS	END NAIL
18. TOP PLATES, LAPS AT CORNERS AND INTERSECTIONS	(2) 16d COMMON (3 1/2" X 0.162"); OR (3) 3" X 0.131" NAILS	FACE NAIL
19. 1" BRACE TO EACH STUD AND PLATE	(2) 8d COMMON (2 1/2" X 0.131"); OR (2) 3" X 0.131" NAILS	FACE NAIL
20. 1" X 6" SHEATHING TO EACH BEARING	(2) 8d COMMON (2 1/2" X 0.131")	FACE NAIL
21. 1" X 8" AND WIDER SHEATHING TO EACH BEARING	(3) 8d COMMON (2 1/2" X 0.131")	FACE NAIL
FLOOR		
22. JOIST TO SILL, TOP PLATE, OR GIRDER	(3) 8d COMMON (2 1/2" X 0.131"); OR 3" X 0.131" NAILS	TOENAIL
23. RIM JOIST, BAND JOIST, OR BLOCKING TO TOP PLATE, SILL OR OTHER FRAMING	8d COMMON (2 1/2" X 0.131"); OR 3" X 0.131" NAILS	6"OC, TOENAIL
24. 1" X 6" SUBFLOOR OR LESS TO EACH JOIST	(2) 8d COMMON (2 1/2" X 0.131")	FACE NAIL
25. 2" SUBFLOOR TO JOIST OR GIRDER	(2) 16d COMMON (3 1/2" X 0.162")	FACE NAIL
26. 2" PLANKS (PLANK NAD BEAM-FLOOR AND ROOF)	(2) 16d COMMON (3 1/2" X 0.162")	EACH BEARING, FACE NAIL
27. BUILT-UP GIRDERS AND BEAMS, 2" LUMBER LAYERS	20d COMMON (4" X 0.192")	32"OC, FACE NAIL AT TOP AND BOTTOM STAGGERED ON OPPOSITE SIDES
	3" X 0.131" NAILS	24"OC, FACE NAIL AT TOP AND BOTTOM STAGGERED ON OPPOSITE SIDES
	(2) 20d COMMON (4" X 0.192"); OR (3) 3" X 0.131" NAILS	END JOIST OR RAFTER, FACE NAIL
28. LEDGER STRIP SUPPORTING JOISTS OR RAFTERS	(3) 16d COMMON (3 1/2" X 0.162"); OR (4) 3" X 0.131" NAILS	FACE NAIL
	(2) 16d COMMON (3) 3" X 0.131" NAILS	FACE NAIL
29. JOIST TO BAND JOIST OR RIM JOIST	(3) 16d COMMON (3 1/2" X 0.162"); OR (4) 3" X 0.131" NAILS	END NAIL
30. BRIDGING OR BLOCKING TO JOIST, RAFTER OR TRUSS	(2) 8d COMMON (2 1/2" X 0.131"); OR (2) 3" X 0.131" NAILS	EACH END, TOENAIL
31. WOOD STRUCTURAL PANELS TO FRAMING SUBFLOOR TO FRAMING	SEE SHEARWALL SCHEDULE SEE STRUCTURAL NOTES	SECTION06160

a. FASTENING SCHEDULE BASED ON IBC TABLE 2304.10.1 AND PROVIDES THE MINIMUM NAILING REQUIRED. WHEN SPECIFIED ELSEWHERE IN THESE PLANS PROVIDE NAILING AS SPECIFIED. SEE IBC FOR COMPLETE NAILING SCHEDULE.

20

CT ENGINEERING INC.

Structural Engineers
180 Nickerson Street Suite 302 Seattle, WA 98109
206.285.4512 (V) 206.285.0618 (F)
www.ctengineering.com

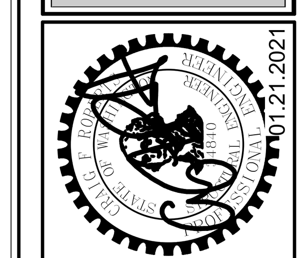

No.	REVISION	DATE

JOB #: 20021
ENG: TSW
CAD: TSW
SCALE: As indicated
KEY ISSUE DATES:
PERMIT: 01.21.2021

FOR PERMIT

Wood Framing Details

BLOSSOM APARTMENTS
214-220 5th Avenue S
Seattle, WA 98104

S9.10

C:\Users\TWandschneider\Documents\20021 - Blossom Apartments - v20_tylerw@ctengineering.com.rvt
1/21/2021 11:17:15 AM

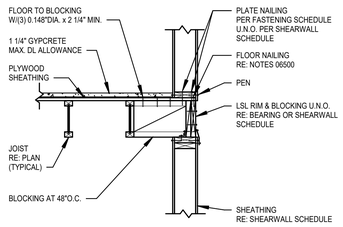

JOIST PARALLEL

SCALE: 3/4" = 1'-0"

1 TYPICAL EXTERIOR WALL TO FRAMING

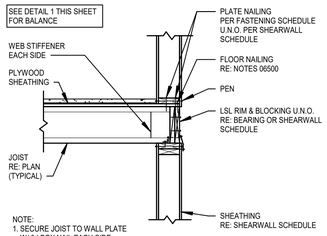

JOIST PERPENDICULAR

SCALE: 3/4" = 1'-0"

2 TYPICAL EXTERIOR WALL TO FRAMING

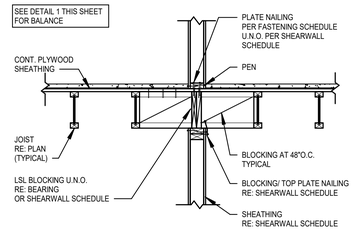

JOIST PARALLEL

SCALE: 3/4" = 1'-0"

3 TYPICAL INTERIOR WALL TO FRAMING

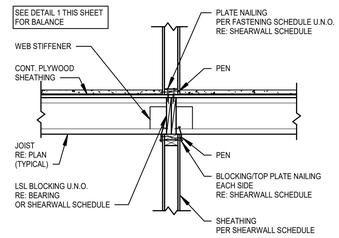

JOIST PERPENDICULAR

SCALE: 3/4" = 1'-0"

4 TYPICAL INTERIOR WALL TO FRAMING

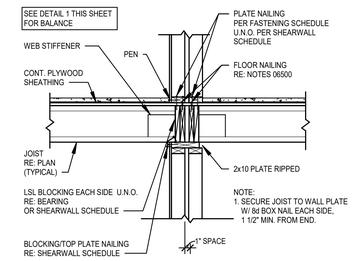

JOIST PERPENDICULAR

SCALE: 3/4" = 1'-0"

5 TYPICAL PARTY WALL

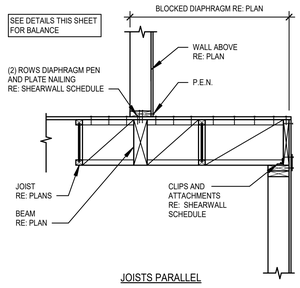

JOISTS PARALLEL

SCALE: 3/4" = 1'-0"

6 SECTION

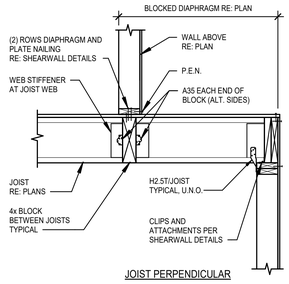

JOIST PERPENDICULAR

SCALE: 3/4" = 1'-0"

7 SECTION

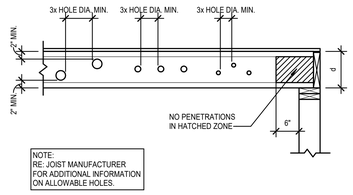

SCALE: 3/4" = 1'-0"

8 JOIST BORING LIMITS

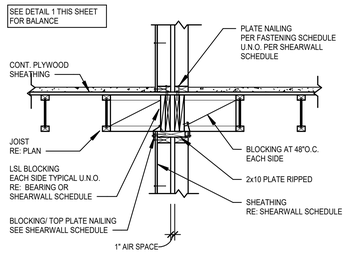

JOISTS PARALLEL

SCALE: 3/4" = 1'-0"

9 TYPICAL DOUBLE WALL

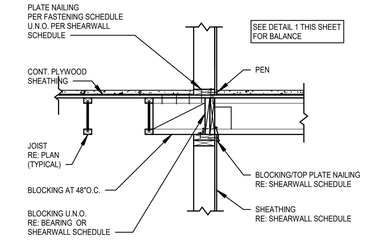

SCALE: 3/4" = 1'-0"

10 SECTION

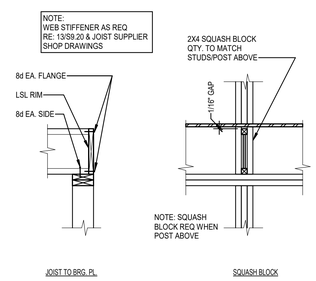

SCALE: 3/4" = 1'-0"

11 I-JOIST NAILING AT BEARING

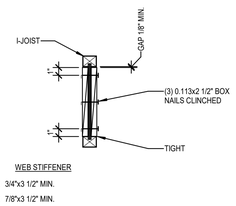

SCALE: 1 1/2" = 1'-0"

12 TYPICAL WEB STIFFENER ATTACHMENT

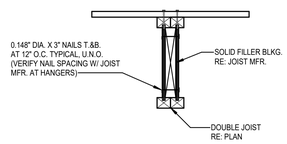

SCALE: 1 1/2" = 1'-0"

13 DOUBLE JOIST DETAIL

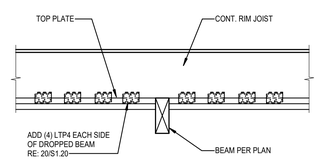

SCALE: 3/4" = 1'-0"

14 TYP. TOP PLATE SPLICE AT DROPPED BEAM

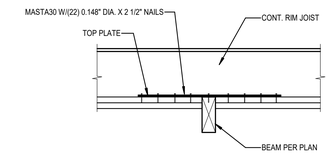

SCALE: 3/4" = 1'-0"

15 TYP. TOP PLATE SPLICE AT DROPPED BEAM

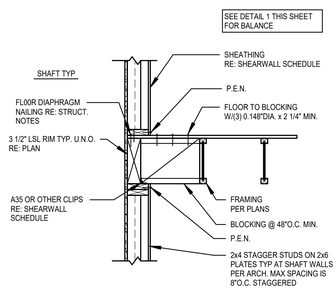

SCALE: 3/4" = 1'-0"

16 TYPICAL STAGGER WALL

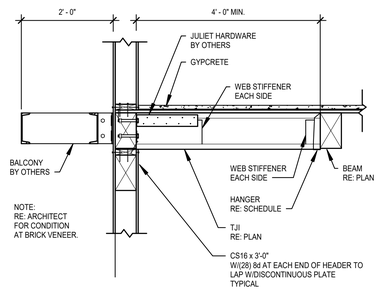

SCALE: 3/4" = 1'-0"

17 SECTION

CT ENGINEERING INC.
Structural Engineers
160 Nickerson Street Suite 302 Seattle, WA 98109
206.282.4512 (V) 206.285.0618 (F)
www.ctengineering.com

01.21.2021

No.	REVISION	DATE

JOB #: 20021
ENG: TSW
CAD: TSW
SCALE: As indicated
KEY ISSUE DATES:
PERMIT: 01.21.2021

FOR PERMIT

Wood Framing Details

BLOSSOM APARTMENTS
214-220 5th Avenue S
Seattle, WA 98104

S9.20

C:\Users\TSWebster\Desktop\Documents\20021 - Blossom Apartments - 220 Avenue\Blossom Apartments.rvt

1/21/2021 11:17:18 AM

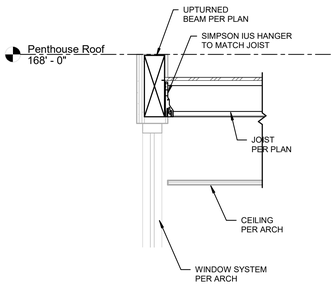

SCALE: 3/4" = 1'-0"

1 FRAMING SECTION

CT ENGINEERING INC.
Structural Engineers
180 Nickerson Street Suite 302 Seattle, WA 98109
206.285.4512 (V) 206.285.0618 (F)
www.ctengineering.com

01.21.2021

No.	REVISION	DATE

JOB #: 20021
ENG: TSW
CAD: TSW
SCALE: 3/4" = 1'-0"
KEY ISSUE DATES:
PERMIT: 01.21.2021

FOR PERMIT

Wood Framing Details

BLOSSOM APARTMENTS
214-220 5th Avenue S
Seattle, WA 98104

S9.30

C:\Users\TWandschneider\Documents\20021 - Blossom Apartments - v20_Nerve@ctengineering.com.rvt
1/21/2021 11:17:19 AM

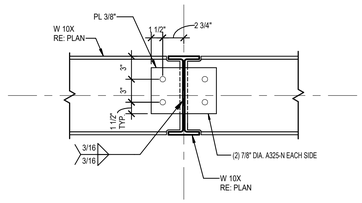

SCALE: 1 1/2" = 1'-0"

5 SECTION

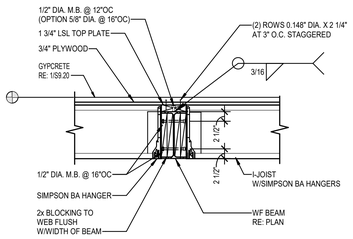

SCALE: 3/4" = 1'-0"

6 SECTION

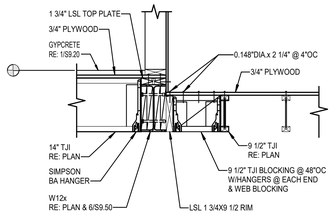

SCALE: 3/4" = 1'-0"

7 SECTION

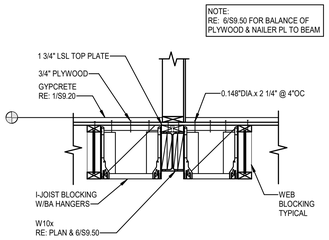

SCALE: 3/4" = 1'-0"

8 SECTION

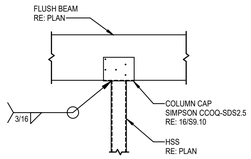

SCALE: 3/4" = 1'-0"

11 HSS TO PSL FLUSH BEAM

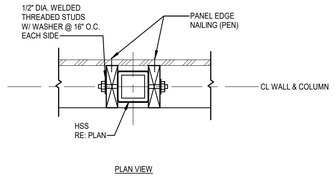

SCALE: 3/4" = 1'-0"

10 STUDS TO STEEL HSS COLUMN

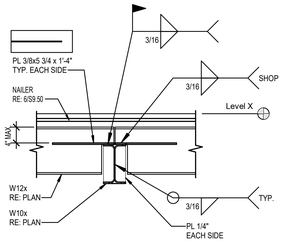

SCALE: 3/4" = 1'-0"

16 SECTION

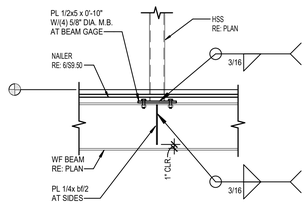

SCALE: 3/4" = 1'-0"

18 SECTION

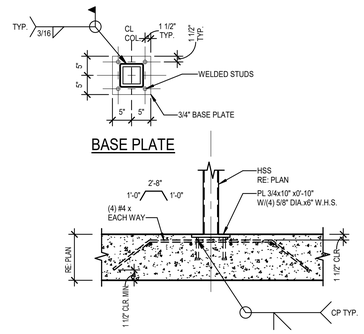

SCALE: 3/4" = 1'-0"

19 SECTION

CT ENGINEERING INC.
Structural Engineers
160 Nickerson Street Suite 302 Seattle, WA 98109
206.285.4512 (V) 206.285.0618 (F)
www.ctengineering.com

01.21.2021

No.	REVISION	DATE

JOB #: 20021
ENG: TSW
CAD: TSW
SCALE: As indicated
KEY ISSUE DATES:

PERMIT: 01.21.2021

FOR PERMIT

Wood & Steel Details

BLOSSOM APARTMENTS
214-220 5th Avenue S
Seattle, WA 98104

S9.50

C:\Users\TSWebster\AppData\Local\Temp\acpublish_1164\20021 - Blossom Apartments - 220 Avenue S.rvt
1/21/2021 11:17:21 AM

LEGEND

ACU	AIR CONDITIONING UNIT
AFF	ABOVE FINISHED FLOOR
AHJ	AUTHORITY HAVING JURISDICTION
AHU	AIR HANDLING UNIT
BDD	BACKDRAFT DAMPER
BHP	BRAKE HORSEPOWER
BTUH	BRITISH THERMAL UNIT PER HOUR
C	COMMON
CAP	CAPACITY
CC	COOLING COIL
CD	CEILING DIFFUSER
CFM	CUBIC FEET PER MINUTE
CLG	CEILING, COOLING
CO	CLEANOUT
COMB	COMBUSTION
CONT	CONTINUE, CONTROL
CONTR	CONTRACTOR
COP	COEFFICIENT OF PERFORMANCE
CWS	CHILLED WATER SUPPLY
CWR	CHILLED WATER RETURN
D	DIAMETER
DB	DRY BULB, DECIBEL
DEG	DEGREE
DIM	DIMENSION
DISCH	DISCHARGE
DN	DOWN
EA	EXHAUST AIR
EAT	ENTERING AIR TEMPERATURE
EER	ENERGY EFFICIENCY RATIO
EF	EXHAUST FAN
EFF	EFFICIENCY
EG	EXHAUST GRILLE, ENGINE GENERATOR
ELEC	ELECTRIC
EQUIV	EQUIVALENT
ESP	EXTERNAL STATIC PRESSURE
EXH	EXHAUST
EXT	EXTERIOR, EXTERNAL
F	FAHRENHEIT
FD	FIRE DAMPER
FCU	FAN COIL UNIT
FLR	FLOOR
FPM	FEET PER MINUTE
FPS	FEET PER SECOND
FSD	FIRE/SMOKE DAMPER
G	GAS
GRD	GRILLES, REGISTERS, AND DIFFUSERS
GWB	GYPSUM WALLBOARD
HORIZ	HORIZONTAL
HP	HORSEPOWER, HEAT PUMP
HRU	HEAT RECOVERY UNIT
HVAC	HEATING, VENTILATING, AND AIR CONDITIONING
HVU	HEATING AND VENTILATION UNIT
HWR	HIGH WALL RETURN, HOT WATER RETURN
HWS	HIGH WALL SUPPLY, HOT WATER SUPPLY
HX	HEAT EXCHANGER
ID	INDIRECT DRAIN, INSIDE DIAMETER
IN	INCH
KW	KILOWATT
L	LONG, LENGTH
LB	POUND
LWR	LOW WALL RETURN
LWS	LOW WALL SUPPLY
MBH	THOUSAND BTU PER HOUR
MECH	MECHANICAL
MCA	MINIMUM CIRCUIT AMPACITY
MOCP	MAXIMUM OVER CURRENT PROTECTION
MTD	MOUNTED
OSA	OUTDOOR AIR
OBD	OPPOSED BLADE DAMPER
OD	OUTSIDE DIMENSION OR DIAMETER
OPNG	OPENING
P	PUMP
PD	PRESSURE DROP
POC	POINT OF CONNECTION
PRV	PRESSURE REDUCING VALVE
PSIG	POUNDS PER SQUARE INCH GAUGE
RA	RETURN AIR
REF	REFERENCE
RF	RELIEF FAN
RG	RETURN GRILLE
RPM	REVOLUTIONS PER MINUTE
SA	SUPPLY AIR
SCH	SCHEDULE
SF	SUPPLY FAN, SQUARE FOOT
SENS	SENSIBLE
SG	SUPPLY GRILLE
SMACNA	SHEET METAL AND AIR CONDITIONING CONTRACTORS NATIONAL ASSOCIATION
SO	SCREENED OPENING
SP	STATIC PRESSURE
SS	STAINLESS STEEL, SANITARY SEWER
SQ	SQUARE
TG	TRANSFER GRILLE
TYP	TYPICAL
UH	UNIT HEATER
UON	UNLESS OTHERWISE NOTED
V	VENT
VENT	VENTILATION, VENTILATOR
VTR	VENT THRU ROOF
W	WASTE, WATT, WIDE
WB	WET BULB (TEMPERATURE)

EQUIPMENT

EF-1 — TYPICAL EQUIPMENT DESIGNATION (EXHAUST FAN SHOWN)

DSD — DUCT SMOKE DETECTOR

T — ROOM THERMOSTAT OR TEMPERATURE TRANSMITTER

H — ROOM HUMIDISTAT OR HUMIDITY TRANSMITTER

TERMINALS

CD-12x12 400 OR CD-1 400 — DIFFUSER/GRILLE TYPE, AND NUMBER OR SIZE; DESIGN CFM (WHERE APPLICABLE); CEILING DIFFUSER (FLOW ARROWS SHOWN FOR NON SYMMETRICAL AIRFLOW)

CEILING RETURN/EXHAUST GRILLE

LINEAR DIFFUSER, CEILING OR WALL MOUNTED (FLOW ARROWS SHOWN FOR NON SYMMETRICAL AIRFLOW)

WALL SUPPLY GRILLE (SG)

WALL RETURN/EXHAUST GRILLE (RG, EG)

50 — TRANSFER GRILLE (TG), DUCT CONNECTED, WALL MOUNTED W/ OPTIONAL CFM SHOWN

TRANSFER GRILLE, CEILING MOUNTED WITH FULL-SIZED LINED DUCT CONNECTION

GENERAL

ARCHITECTURAL BACKGROUND (THIN LINE)

NEW MECHANICAL WORK (HEAVY LINE)

MATCHLINE OR PROPERTY LINE

SECTION INDENTIFICATION (DETAIL SIMILAR)

A, M-3, M-3 — INDICATES DIRECTION OF CUTTING PLANE; LETTER INDICATES SECTION (NO. INDICATES DETAIL); SHEET # WHERE SECTION IS DRAWN; SHEET # WHERE SECTION IS TAKEN

DUCTWORK

18x12 — DUCT (1ST FIGURE = SIDE SHOWN, 2ND FIGURE = SIDE NOT SHOWN)

UP DOWN — DUCT SECTION, POSITIVE PRESSURE

UP DOWN — DUCT SECTION, NEGATIVE PRESSURE

UP DOWN — ROUND DUCT SECTION

UP UP UP — DUCT PENETRATION THRU FLOOR OR ROOF

FSD FSD — FIRE/SMOKE DAMPER (--◀ = HORIZ DUCT, --◆ = VERT DUCT), 2-HR RATED, UON

VOLUME DAMPER

FD FD — FIRE DAMPER (--◀ = HORIZ DUCT, --◆ = VERT DUCT), 2-HR RATED, UON

90° ELBOW, R/D OR R/W=1.5

SQUARE CORNER ELBOW WITH TURNING VANES

90° TAKE-OFF OR TEE

90° CONICAL TAKE-OFF

45° LATERAL TAKE-OFF

TRANSITION OR REDUCER (FOT = FLAT ON TOP, FOB = FLAT ON BOTTOM)

WYE FITTING

90° RECTANGULAR TAKE-OFF WITH 45° TAPER

90° DIVERGING RECTANGULAR TEE, EITHER RADIUS OR TURNING VANES

FLEXIBLE DUCT

Ø — ROUND DUCT INDICATOR

M — MOTORIZED DAMPER

GENERAL NOTES

GENERAL NOTES - MECHANICAL

1. REFERENCE TO RELATED WORK: "REF" INDICATIONS DENOTE WORK COVERED ELSEWHERE (ARCHITECTURAL, STRUCTURAL, CIVIL, ELECTRICAL, LANDSCAPE, OR KITCHEN), OR ITEM BASED ON A SPECIFIC MANUFACTURER'S DIMENSIONS (VERIFY).

2. CODES: COMPLETE INSTALLATION OF THE MECHANICAL SYSTEM SHALL BE PER THE APPLICABLE BUILDING, MECHANICAL, ENERGY, PLUMBING, FIRE, AND HEALTH CODES AND REGULATIONS AS ADOPTED BY THE LOCAL AHJ.

3. PREPARE AND SUBMIT FOR REVIEW A SHOP DRAWING BASED ON FINAL STRUCTURAL SHOP DRAWINGS FOR LOCATING AND ROUTING ALL DUCTWORK, DAMPERS, EQUIPMENT, PIPING, ETC.
   A. COORDINATE FLOOR AND BEAM PENETRATIONS WITH STRUCTURAL.
   B. COORDINATE FINAL LOCATION AND ROUTING WITH CEILING, LIGHTS, WALLS, FIRE SPRINKLER PIPING, AND OTHER TRADES WORK.
   C. INCLUDE ADDITIONAL OFFSETS, ELBOWS, ROUTING, EQUIVALENT DUCT SIZING EXCHANGE, RELOCATING, ETC. AS REQUIRED FOR A COMPLETE OPERATING MECHANICAL SYSTEM.
   D. PROVIDE SHOP DRAWINGS AT NO ADDITIONAL COST TO THE OWNER.

4. MECHANICAL CONTRACTOR SHALL LOCATE AND COORDINATE EXACT LOCATION OF ALL MECHANICAL EQUIPMENT WITHIN THE STRUCTURE.

5. ACCESS DOORS: COORDINATE WITH ARCHITECT AND LOCATE ALL ACCESS DOORS ON SHOP DRAWINGS PRIOR TO BEGINNING OF CONSTRUCTION. ACCESS DOORS IN FIRE RATED STRUCTURE SHALL BE FIRE RATED. VERIFY ACCESS DOOR LOCATIONS WITH GENERAL CONTRACTOR PRIOR TO BIDDING.

6. RATED PENETRATION: DUCT PENETRATIONS THROUGH RATED ENCLOSURES SHALL BE FIRE/SMOKE DAMPERED PER THE LATEST EDITION OF THE UNDERWRITERS LABORATORIES(UL) FIRE RESISTANCE WITH HOURLY RATINGS FOR THROUGH-PENETRATION FIRE STOPS SYSTEM VOLUME #2, OR SHALL BE INSTALLED IN STRICT ACCORDANCE WITH THE MANUFACTURER'S UL LISTINGS (3M OR EQUIVALENT). DETERMINE REQUIREMENTS WITH GENERAL CONTRACTOR PRIOR TO BID.

7. EXHAUST OUTLETS: SOURCE-SPECIFIC FANS SHALL BE VENTED TO OUTDOORS WITH A MINIMUM 3' CLEARANCE BETWEEN VENT OUTLETS AND BUILDING OPENINGS, AND 10' MINIMUM BETWEEN VENT OUTLETS AND MECHANICAL AIR INTAKES.

8. ROOF PENETRATIONS: SEE ARCHITECTURAL DRAWINGS FOR ROOF CAP, ROOF CURB, ROOF DRAIN, AND VTR DETAILS.

9. EXPOSED PIPING: PROVIDE CHROME PLATING FOR EXPOSED PIPING IN FINISHED ROOMS.

10. PENETRATIONS: PROVIDE ESCUTCHEON PLATES FOR EXPOSED PIPING PENETRATIONS AND SHEET METAL FLASHING FOR EXPOSED DUCTWORK PENETRATIONS.

11. SHAFT AND PLENUM CONNECTIONS: SEAL CONNECTIONS TO AIR SHAFTS AIRTIGHT. PROVIDE AIRTIGHT SEAL AROUND PENETRATIONS IN AIR PLENUMS.

12. LIGHT FIXTURE CLEARANCE: COORDINATE LOCATIONS OF MECHANICAL WORK TO PROVIDE CLEARANCES OVER LIGHTING FIXTURES FOR REMOVAL AND REPLACEMENT.

13. CABLE TRAYS: DUCTWORK AND PIPING INSTALLED ADJACENT TO ELECTRICAL CABLE TRAYS SHALL ALLOW MINIMUM ACCESS OF 6" ABOVE AND TO THE SIDE OF CABLE TRAYS.

14. ACCESS CLEARANCES FOR MAINTENANCE AND REPLACEMENT: VERIFY PHYSICAL DIMENSIONS OF EQUIPMENT TO ENSURE THAT ACCESS CLEARANCES CAN BE MET. COORDINATE LOCATIONS OF MECHANICAL WORK AND WORK OF OTHER TRADES TO PROVIDE ACCESS CLEARANCES FOR SERVICE AND MAINTENANCE.

COORDINATION REQUIREMENTS

1. PIPING: COORDINATE WITH STRUCTURAL FOR EXACT LOCATION OF ALL STRUCTURAL FRAMING AND FOOTINGS AND FINALIZE THE EXACT ROUTING OF ALL PIPES WITH STRUCTURAL AND AT THE SITE PRIOR AND DURING THE CONSTRUCTION.

2. DUCTWORK: LOCATE AND COORDINATE THE EXACT LOCATION OF DUCTWORK WITH STRUCTURAL PLANS AND WITH THE GENERAL CONTRACTOR PRIOR TO INSTALLATION OF ANY STRUCTURE OR EQUIPMENT. COORDINATE WITH FRAMING CONTRACTOR TO ASSURE JOIST SPACES LINE UP WHEN DUCTWORK MUST PASS THROUGH DIFFERENT JOIST SPACES.

3. ADJUSTMENTS: ALL EQUIPMENT, MOTORS, FANS GAS BURNERS, IGNITION DEVICES, DRIVES, ETC. SHALL BE ADJUSTED AND BALANCED TO OPERATE AT SPECIFIED RATINGS AS REQUIRED FOR THIS PROJECT SITE AND ACCOUNTING FOR ELEVATION ABOVE SEA LEVEL.

4. APPROVALS: MECHANICAL AND PLUMBING EQUIPMENT SHALL BE APPROVED FOR INSTALLATION IN THE PROJECT LOCATION AND SHALL HAVE ALL CERTIFICATIONS AND RATINGS TO MEET ALL ENERGY, POLLUTION, ENVIRONMENTAL, SEISMIC, ETC. CODES AND REGULATIONS. THE CONTRACTOR SHALL COORDINATE WITH HIS MANUFACTURE SUPPLIERS AND SHALL INCLUDE ALL COSTS REQUIRED TO MEET THESE REQUIREMENTS IN HIS BID.

PIPING NOTES

1. DISASSEMBLY PROVISIONS: PROVIDE UNIONS OR FLANGES AT PIPING CONNECTIONS TO EQUIPMENT, COILS, TRAPS, CONTROL VALVES, AND OTHER COMPONENTS TO ALLOW DISASSEMBLY FOR MAINTENANCE.

2. REDUCERS: PROVIDE AS REQUIRED FROM LINE PIPE SIZE TO EQUIPMENT, TRAP, COIL, AND CONTROL VALVE CONNECTION SIZES.

3. OFFSETS: PROVIDE FOR BRANCH LINES TO EQUIPMENT.

4. DIELECTRIC UNIONS: PROVIDE AT CONNECTIONS OF DISSIMILAR PIPE.

5. REFRIGERANT PIPING: PROVIDE SIZING & INSTALLATION IN STRICT ACCORDANCE WITH MANUFACTURER'S INSTRUCTIONS. INSTALL REFRIGERANT PIPING BETWEEN INDOOR AND OUTDOOR UNITS AS AS REQUIRED AND RECOMMENDED BY MANUFACTURER. REFRIGERANT PIPING RUNS OVER 50' SHALL BE INSTALLED PER MANUFACTURER'S LONG RUN SIZING AND INSTALLATION STANDARDS. NOTE: ROUTING NOT SHOWN ON PLANS.

DRAWINGS ARE DIAGRAMMATIC, SHOWING THE GENERAL LOCATION, TYPE, LAYOUT, AND EQUIPMENT REQUIRED. THE DRAWINGS SHALL NOT BE SCALED FOR EXACT MEASUREMENT. REFER TO ARCHITECTURAL DRAWINGS FOR DIMENSIONS. REFER TO MANUFACTURER'S STANDARD INSTALLATION DRAWINGS FOR EQUIPMENT CONNECTIONS AND INSTALLATION REQUIREMENTS. PROVIDE DUCTWORK, CONNECTIONS, ACCESSORIES, OFFSETS, AND MATERIALS NECESSARY FOR A COMPLETE SYSTEM.

SHEET METAL NOTES

1. REFERENCE: SMACNA HVAC DUCT CONSTRUCTION STANDARDS, METAL AND FLEXIBLE, CURRENT EDITION.

2. CLEARANCE: COORDINATE DUCTWORK WITH MISCELLANEOUS OBSTRUCTIONS IN CEILING SPACE.

3. ROUND ELBOWS AND OFFSETS: FULL RADIUS (R/D = 1.5), 5-PIECE SEGMENTED OR STAMPED. REFER TO SMACNA HVACDCS FIG 2-7, 3-3. DO NOT USE ANGLED OFFSET (TYPE 1). MITERED OFFSET (TYPE 2) MAY BE USED UP TO 30 DEGREE OFFSET ANGLE.

4. ROUND TEES AND LATERALS: CONICAL TEE PER SMACNA HVACDCS FIG 3-5; DO NOT USE STRAIGHT TEE; DO NOT USE CONICAL SADDLE TAP FOR EXPOSED DUCTWORK IN FINISHED SPACES. 90-DEGREE TEE WITH OVAL TO ROUND TAP, LATERAL, AND 45-DEGREE RECTANGULAR LEAD-IN PER SMACNA HVACDCS FIG 3-4.

5. RECTANGULAR ELBOWS AND OFFSETS: FULL RADIUS WHERE SPACE PERMITS, R/W = 1.5; OTHERWISE USE SQUARE CORNER ELBOW WITH TURNING VANES.

6. RECTANGULAR DIVIDED FLOW FITTINGS: USE GENERALLY, EXCEPT BRANCHES TO TERMINALS; SMACNA HVACDCS FIG 2-5.

7. TURNING VANES: H.E.P. MANUFACTURER OR APPROVED HIGH EFFICIENCY PROFILE AIRFOIL TYPE FOR RECTANGULAR SQUARE THROAT ELBOWS. ACOUSTICAL TYPE FOR RETURN AIR MITERED ELBOWS.

8. TAKEOFFS TO OPENINGS: CONICAL TYPE WITH VOLUME DAMPER FOR ROUND DUCT BRANCHES PER SMACNA HVACDCS FIG 2-6; MINIMUM INLET DIAMETER 2 INCHES LARGER THAN DUCT SIZE. 45 DEGREE ENTRY FITTING FOR RECTANGULAR DUCT BRANCHES PER SMACNA HVACDCS FIG 2-6.

9. FLEXIBLE CONNECTIONS: PROVIDE AT EACH DUCT CONNECTION TO FANS, PACKAGED HVAC EQUIPMENT, EXTERNALLY ISOLATED AIR HANDLING UNITS, FAN COIL UNITS, AND SIMILAR EQUIPMENT. EXCEPTION: EQUIPMENT IN CORRIDOR CEILING SPACES WHERE FIRE RATING IS REQUIRED.

HVAC NOTES

1. ATTACHMENTS: AIR DISTRIBUTION OUTLETS AND LOUVERS SHALL HAVE ALL REQUIRED ACCESSORIES AND ATTACHMENTS FOR A COMPLETE CONNECTION TO THE SPECIFIC TYPE OF STRUCTURE THAT THEY ARE BEING ATTACHED TO. THIS INCLUDES, BUT IS NOT LIMITED TO, EXTERIOR BRICKS, GWB WALLS, GWB CEILING, ETC.

2. DUCTWORK: DUCTWORK SHALL BE SMOOTH SHEET METAL (CLASS-1). DUCTWORK THROUGH FIRE RATED STRUCTURE AND FLOOR SHALL BE MIN. 26 GA. STEEL. MAXIMUM LENGTH OF FLEXIBLE DUCTS SHALL BE 5'-0". UNLESS OTHERWISE NOTED ON DRAWINGS. DUCTWORK SIZES SHOWN ARE INSIDE CLEAR DIMENSIONS.

3. SEISMIC: PROVIDE SEISMIC RESTRAINTS FOR MECHANICAL EQUIPMENT, PIPING, AND DUCTWORK PER SMACNA AND LOCAL REGULATIONS.

4. FILTER CLEARANCE: PROVIDE ADEQUATE CLEARANCE FOR CHANGING AIR FILTERS.

5. DUCTWORK AND PIPING OUTSIDE OF MECHANICAL ROOMS SHALL BE CONCEALED, COORDINATE WITH THE GENERAL CONTRACTOR TO FUR-OUT AS REQUIRED.

6. FIRE RATINGS: RATED FLOOR/CEILING JOINT SPACES HAVING DUCTWORK INSIDE THEM SHALL BE FIRE/SMOKE PROTECTED TO MAINTAIN THE 1-HOUR FLOOR/CEILING RATING PER LOCAL JURISDICTIONS. EXHAUST DUCTWORK PENETRATING THE 1-HOUR ROOF/CEILING OR FLOOR/CEILING ASSEMBLY SHALL HAVE ACCESSIBLE CEILING FIRE DAMPERS. ALTERNATIVELY, THE EXHAUST DUCTWORK SHALL BE ROUTED INSIDE A RATED SHAFT TO PROTECT THE CEILING/ROOF RATING PER THE LOCAL JURISDICTIONS.

7. FIRESTOP: PIPE, DUCT AND CONDUIT PENETRATIONS THROUGH RATED ASSEMBLIES SHALL BE FIRE AND SMOKE STOPPED PER CODE.

8. VOLUME DAMPERS: PROVIDE AN ACCESSIBLE MANUAL VOLUME DAMPER FOR EACH SUPPLY, RETURN, OSA AND EXHAUST OPENING, LOCATED AS FAR UPSTREAM AS POSSIBLE FROM THE OPENING. PROVIDE A MANUAL VOLUME DAMPER FOR BRANCH MAINS SERVING MORE THAN ONE OPENING. VOLUME DAMPERS IN NON-ACCESSIBLE CEILING SHALL HAVE A CONTROL ARM EXTENDED TO AN ACCESSIBLE LOCATION. PROVIDE "YOUNG" REGULATOR OR EQUAL. EXACT LOCATION OF CONTROL DEVICES VISIBLE IN FINISHED SPACES SHALL BE COORDINATED WITH THE ARCHITECT.

9. TEST AND BALANCE WORK SHALL BE PERFORMED BY AN INDEPENDENT TEST AND BALANCE AGENCY. PROVIDE (3) COPIES OF TEST AND BALANCE REPORT TO OWNER.

10. LOUVER SIZES INDICATED ON THE PLANS REFLECT MINIMUM REQUIRED SIZES. FOR ACTUAL SIZE, SEE ARCHITECTURAL DRAWINGS.

11. THERMOSTATS SHALL BE INSTALLED AT A MOUNTING HEIGHT OF 48" AFF MAXIMUM TO THE TOP OF THE THERMOSTAT. PROVIDE TAMPERPROOF COVER FOR ALL PUBLIC AREA THERMOSTATS.

INSULATION/LINING NOTES

1. ENERGY CODE: AS A MINIMUM, COMPLY WITH THICKNESSES AND TYPES LISTED IN ENERGY CODE ENFORCED BY AHJ.

2. EXTENT OF INTERNAL DUCT LINING:
   A. GRILLE AND DIFFUSER BOXES AND BOOTS.
   B. TRANSFER DUCTS.
   C. THE FIRST 10 FEET OF SUPPLY AND RETURN DUCTWORK FROM THE AIR HANDLER.

3. EXTENT OF EXTERNAL DUCT INSULATION:
   A. SUPPLY AND RETURN AIR IN UNCONDITIONED SPACES, MECHANICAL ROOMS, ELECTRICAL ROOMS, AND EQUIPMENT ROOMS NOT SPECIFIED TO BE INTERNALLY LINED.
   B. SUPPLY AIR ABOVE CEILINGS OR EXPOSED NOT SPECIFIED TO BE INTERNALLY LINED.
   C. OUTDOOR AIR INTAKE.

4. MISCELLANEOUS DUCT FITTINGS (CONICAL TAKEOFFS, ETC.): WRAP WITH INSULATION FOR CONDENSATION CONTROL.

5. PROVIDE MINIMUM 6" CLEARANCE ON ALL SIDES OF DUCTS FOR WRAPPING.

DRYER NOTES:

1. CLOTHES DRYER MOISTURE EXHAUST DUCT SHALL TERMINATE ON THE OUTSIDE OF THE BUILDING AND SHALL BE EQUIPPED WITH A BACK-DRAFT DAMPER. SCREENS SHALL NOT BE USED AND THE EXHAUST DUCT MAY NOT EXTEND INTO OR THROUGH DUCTS AND PLENUMS.

PRE-CON MEETING

CONTRACTORS SHALL ATTEND A PRE-CONSTRUCTION MEETING WITH THE ENGINEER FOR THE PURPOSE OF REVIEWING THE WORK PRIOR TO ORDERING ANY EQUIPMENT OR PERFORMING ANY WORK. THE MEETING SHALL BE LOCATED AT THE PROJECT SITE ON A DATE AND TIME TO BE MUTUALLY AGREED. THE MEETING WILL BE A WORKING SESSION. THE MEETING WILL BE FACILITATED BY THE ENGINEER AND THE AGENDA WILL INCLUDE A DETAILED REVIEW OF THE PLANS AND SPECIFICATIONS, CROSS CHECK WITH OTHER TRADES FOR COORDINATION ISSUES, REVIEW OF PROPOSED PRODUCTS, REVIEW OF PLANNED MEANS AND METHODS, AND ON-SITE INVESTIGATION OF FIELD CONDITIONS RELATIVE TO EXISTING CONDITIONS THAT COULD AFFECT THE WORK. PERSONS ATTENDING THE MEETING SHALL BE KNOWLEDGEABLE OF THE PROJECT AND SHALL BE THE SPECIFIC PERSONS INTENDED TO CONTINUE WITH THE PROJECT THROUGH TO COMPLETION. IF REQUIRED, REVISED PLANS WILL BE ISSUED THROUGH OFFICIAL CHANNELS. CHANGES IN THE BID PRICE WILL BE DISCUSSED, BUT NO CHANGE ORDERS WILL BE ISSUED UNLESS PROCESSED THOUGH OFFICIAL CHANNELS. IT SHALL BE UNDERSTOOD THAT THE ENGINEER HAS NO AUTHORITY TO ISSUE CHANGE ORDERS.

THE FOLLOWING TRADES SHALL BE REPRESENTED FOR THE MINIMUM TIME INDICATED:

MECHANICAL SHEET METAL	2 HOURS
PLUMBING/PIPING	2 HOURS
ELECTRICAL	2 HOURS
GERERAL CONTRACTOR	ALL SESSIONS

APPLICABLE CODES

THESE DRAWINGS ARE BASED ON THE FOLLOWING CODES:
- 2015 SEATTLE BUILDING CODE
- 2015 SEATTLE MECHANICAL CODE
- 2015 SEATTLE PLUMBING CODE
- 2015 INTERNATIONAL FUEL GAS CODE (WITH SEATTLE AMENDMENTS)
- 2015 SEATTLE ENERGY CODE

WHOLE HOUSE VENTILATION NOTES

1. EACH DWELLING UNIT SHALL BE EQUIPPED WITH A WHOLE HOUSE VENTILATION SYSTEM AND SHALL COMPLY WITH CHAPTER 4 OF THE 2015 SEATTLE MECHANICAL CODE.

2. THE WHOLE HOUSE VENTILATION SYSTEM SHALL OPERATE CONTINUOUSLY. EXHAUST FANS, FORCED-AIR SYSTEM FANS, OR SUPPLY FANS SHALL BE EQUIPPED WITH "FAN ON" AS OVERRIDE CONTROLS. CONTROLS SHALL BE CAPABLE OF OPERATING THE VENTILATION SYSTEM WITHOUT ENERGIZING OTHER ENERGY-CONSUMING APPLIANCES. A LABEL SHALL BE AFFIXED TO THE CONTROLS THAT READS "WHOLE HOUSE VENTILATION (SEE OPERATING INSTRUCTIONS)."

3. WHOLE HOUSE FANS SHALL HAVE A SONE RATING OF 1.0 OR LESS MEASURED AT 0.1" WATER GAUGE.

4. CONFIRM WITH WINDOW SUPPLIER THAT THE WINDOWS WILL BE EQUIPPED WITH OUTDOOR AIR INLETS. IF THEY DO NOT, PROVIDE OUTDOOR AIR INLETS COMPLYING WITH CHAPTER 4 OF THE 2015 SEATTLE MECHANICAL CODE.

DRAWING INDEX

DWG	DESCRIPTION	INCLUDED IN SET: PROGRESS SET 01/15/21	INCLUDED IN SET: PROGRESS SET 02/02/21	SHEETS WITH REVISIONS
M000	LEGEND, GENERAL NOTES & DRAWING INDEX	●	●	
M001	SCHEDULES & CALCULATIONS		●	
M002	CALCULATIONS & NOTES		●	
M100	SITE PLAN			
M200	BASEMENT LEVEL FLOOR PLAN	●	●	
M201	LEVEL 1 FLOOR PLAN	●	●	
M202	LEVEL 2 FLOOR PLAN	●	●	
M203	LEVEL 3 FLOOR PLAN	●	●	
M204	LEVEL 4 FLOOR PLAN	●	●	
M205	LEVEL 5 FLOOR PLAN	●	●	
M206	LEVEL 6 FLOOR PLAN	●	●	
M207	LEVEL 7 FLOOR PLAN	●	●	
M208	LEVEL 8 FLOOR PLAN	●	●	
M209	ROOF PLAN	●	●	
M300	ENLARGED PLANS	●	●	
M301	ENLARGED UNIT PLANS		●	
M400	DETAILS & DIAGRAMS		●	
M401	DETAILS & DIAGRAMS		●	

NO.	DATE	DESCRIPTION
	1/14/21	PROGRESS SET
	2/02/21	PROGRESS SET

REVISIONS

MATTHEW D. BROOKS — STATE OF WASHINGTON — REGISTERED PROFESSIONAL ENGINEER

DRAWN: BK/JP
DESIGNED: BK/JP
CHECKED: MB
APPROVED: MB

EMERALD CITY ENGINEERS, INC
21705 Highway 99
Lynnwood, WA 98036
TEL: 425-741-1200

PROJECT:
BLOSSOM APARTMENTS

DATE: **2/02/21**

SHEET TITLE:
LEGEND, GENERAL NOTES & DRAWING INDEX

SHEET NO.
M000

COPYRIGHT 2021, EMERALD CITY ENGINEERS, INC.

J:\PARK J\2329-001 BLOSSOM MIRANT CITIES, SEATTLE, WA\DWG\M000 - COVER SHEET.DWG 02-02-2021 22:04

FAN SCHEDULE

EQUIP NO.	SERVICE	TYPE	AIRFLOW, CFM	ESP, IN WG	ELECTRICAL VOLTAGE	ELECTRICAL HP	OPERATION	WEIGHT, LBS	BASIS OF DESIGN (1)
EF-1	PER PLANS	CEILING MOUNTED	80	0.25	115V/1P	FHP	(2)	10	PANASONIC FV-05-11VKSL2 (2)(3)
EF-2	PER PLANS	CEILING MOUNTED	50	0.25	115V/1P	FHP	MANUAL	10	PANASONIC FV-0510VS2
EF-3	AMENITY ROOM RESTROOM	CEILING MOUNTED	50	0.25	115V/1P	FHP	MANUAL	15	GREENHECK SP-B110
EF-4	LOBBY RESTROOM 1	CEILING MOUNTED	50	0.25	115V/1P	FHP	MANUAL	15	GREENHECK SP-B110
EF-5	LOBBY RESTROOM 2	CEILING MOUNTED	50	0.25	115V/1P	FHP	MANUAL	15	GREENHECK SP-B110
EF-6	BASEMENT EXHUAST	INLINE	500	0.50	115V/1P	FHP	CONTINUOUS	55	GREENHECK SQ-90-VG
CSF-1	CORRIDOR SUPPLY	UTILITY	3,150	0.50	208V/3P	1/2	CONTINUOUS	440	GREENHECK USF-24
CEF-1	CORRIDOR EXHAUST	CABINET INLINE	100	0.25	115V/1P	FHP	CONTINUOUS	20	GREENHECK CSP-A110
SF-1	BASEMENT OUTSIDE AIR	INLINE	500	0.50	115V/1P	FHP	CONTINUOUS	55	GREENHECK SQ-90-VG
TSF-1	TRANSFORMER VAULT	INLINE	3,200	0.50	208V/1P	1.0	(5)	155	GREENHECK SQ-160-VG
GEF-1	GARAGE EXHAUST	INLINE	3,200	0.50	208V/1P	1.0	(6)	155	GREENHECK SQ-160-VG
GSF-1	GARAGE TRANSFER FAN	INLINE	1,000	0.50	208V/3P	1/4	(6)	65	GREENHECK SQ-100-A
GSF-2	GARAGE TRANSFER FAN	INLINE	1,000	0.50	208V/3P	1/4	(6)	65	GREENHECK SQ-100-A
SPF-1	STAIR 1 PRESSURIZATION	UTILITY	15,000	0.75	208V/3P	5.0	(8)	1,650	GREENHECK USF-40 (7)(9)(10)(11)(12)(13)
SPF-2	STAIR 2 PRESSURIZATION	UTILITY	16,500	0.75	208V/3P	5.0	(8)	1,650	GREENHECK USF-40 (7)(9)(10)(11)(12)(13)
SPF-3	ELEVATOR PRESSURIZATION	UTILITY	36,000	0.75	208V/3P	15.0	(8)	2,550	GREENHECK USF-49 (7)(9)(10)(11)(12)(13)

NOTES:
(1) PROVIDE BACKDRAFT DAMPERS ON EXHAUST FANS.
(2) FAN SHALL BE DUAL SPEED, CONTINUOUS LOW SETTING WITH WALL SWITCH FOR HIGH SETTING. REFER TO ENLARGED UNIT PLANS FOR LOW CFM SETTING
(3) FAN SHALL SERVE AS A WHOLE HOUSE VENTILATION FAN.
(4) PROVIDE MANUFACTURER'S OPTIONAL SPEED CONTROLLER. SPEED CONTROLLER SHALL BE MOUNTED WITHIN FAN HOUSING.
(5) INTERLOCK WITH TRANSFORMER ROOM PRIMARY & SECONDARY THERMOSTATS. PRIMARY THERMOSTAT SHALL OPERATE FAN AT 70°F. SECONDARY THERMOSTAT SHALL TURN OFF THE FAN AT 140°F (BASED ON SEATTLE CITY LIGHT CONSTRUCTION STANDARD 0751.00 SECTION 9.5).
(6) REFER TO PARKING GARAGE NOTES ON DWG M001.
(7) PROVIDE VFD. VFD SHALL BE RATED FOR OUTDOOR INSTALLATION.
(8) FAN NORMALLY OFF. FAN SHALL RUN WHEN FIRE ALARM SYSTEM WITHIN THE BUILDING IS ACTIVATED. REFER TO IBC SECTION 909.
(9) FAN SHALL BE CONNECTED TO LEGALLY REQUIRED STANDBY POWER SOURCE.
(10) FAN SIZED WITH A 25% MINIMUM SAFETY FACTOR ADDED.
(11) PROVIDE 1.5 TIMES THE NUMBER OF REQUIRED BELTS (2 MINIMUM).
(12) FAN SHALL HAVE A CURRENT MONITORING DEVICE. VERIS MODEL H608 (PROVIDED AND INSTALLED BY THE ELECTRICAL CONTRACTOR).
(13) MOTORS DRIVING FAN SHALL NOT BE OPERATED BEYOND IT'S NAMEPLATE HORSEPOWER, AS DETERMINED FROM MEASUREMENT OF ACTUAL CURRENT DRAW, AND SHALL HAVE A MINIMUM SERVICE FACTOR OF 1.15.

PARKING GARAGE VENTILATION NOTES

1. PARKING GARAGE VENITLATION MINIMUM REQUIREMENTS:
   MINIMUM CONTINUOUS VENTILATION:
   BUILDING GARAGE REQUIREMENTS:

   0.05 x 4,250 SF = 220 CFM (CONTINUOUS VENTILATION REQUIRED)
   0.75 x 4,250 SF = 3,200 CFM (MAXIMUM VENTILATION REQUIRED)

2. THE TERMINATION POINT FOR PARKING GARAGE EXHAUST OUTLETS SHALL BE 10 FEET FROM PROPERTY LINE, 10 FEET FROM OPENINGS INTO A BUILDING, 10 FEET FROM MECHANICAL AIR INTAKES, 10 FEET ABOVE GRADE, AND 3 FEET ABOVE ROOF, IF APPLICABLE (PER SMC SECTION 501.3.1). NOTE: 10 FEET FROM PROPERTY LINE DOES NOT INCLUDE PROPERTY LINE SEPARATING A LOT FROM A PUBLIC STREET OR ALLEY RIGHT-OF-WAY.

3. PARKING GARAGE VENTILATION SYSTEM SHALL BE EQUIPPED WITH CARBON MONOXIDE & NITROGEN DIOXIDE SENSORS THROUGHOUT THE GARAGE (1 SENSOR FOR EVERY 5,000 SF). CO SENSORS SHALL BE EQUIPPED WITH A LOW SETPOINT (SET TO 35 PPM) AND HIGH SETPOINT (SET TO 200 PPM). THE NITROGEN DIOXIDE SENSORS SHALL BE EQUIPPED WITH A LOW SETPOINT (SET TO 1 PPM) AND A HIGH SETPOINT (SET TO 10 PPM). GARAGE EXHAUST FAN GEF-1 SHALL BE EQUIPPED WITH A VARIABLE FREQUENCY DRIVE PROVIDED BY THE MECHANICAL CONTRACTOR UNLESS OTHERWISE NOTED. WHEN ANY OF THE ASSOCIATED CARBON MONOXIDE OR NITROGEN DIOXIDE SENSORS GO INTO LOW SETPOINT, THE EXHAUST FAN SHALL OPERATE AT 1/2 SPEED. IF ANY CARBON MONOXIDE OR NITROGEN DIOXIDE SENSOR GOES INTO HIGH SETPOINT, THE EXHAUST FAN SHALL RAMP UP TO FULL SPEED.

4. GARAGE EXHAUST FAN GEF-1 RUNS CONTINUOUSLY TO PROVIDE THE CODE MINIMUM VENTILATION FOR THE GARAGE.

5. GARAGE SUPPLY FANS GSF-1 & GSF-2 SHALL RUN CONTINUOUSLY.

DUCTED SPLIT SYSTEM HEAT PUMP SCHEDULE – INDOOR UNIT

EQUIP NO.	SERVICE	MOUNTING/ DISCHARGE	FAN AIRFLOW, CFM	FAN MIN. OSA CFM	FAN ESP, IN WG	FAN MOTOR HP	AUX. HEAT, KW (208V)	ELECTRICAL VOLTAGE	ELECTRICAL MCA	ELECTRICAL MOCP	BASIS OF DESIGN (1)(4)(3)	CONNECTED OUTDOOR UNIT
FCU-1	AMENITY ROOM	HORIZONTAL	1,000	200	0.25	1/2	–	208V/1P	19	20	FIRST CO 31HXX (2)	HP-1
FCU-2	LEVEL 1 LOBBY	HORIZONTAL	1,600	350	0.40	3/4	10	208V/1P	52.8	60	CARRIER FX4DNB049 (2)	HP-2

NOTES:
(1) REFRIGERANT SHALL BE R-410A.
(2) PROVIDE NON-LOUVERED ACCESS PANEL.
(3) PROVIDE SAFETY OVERFLOW SWITCH FOR SECONDARY CONDENSATE DRAINAGE. PRIMARY CONDENSATE DRAINAGE BY PLUMBING CONTRACTOR. REFER TO PLUMBING PLANS FOR ROUTING.
(4) INDOOR AND OUTDOOR UNITS SHALL HAVE U.S. DOE CERTIFIED RATINGS.

DUCTED SPLIT SYSTEM HEAT PUMP SCHEDULE – OUTDOOR UNIT

EQUIP NO.	SERVICE	CAPACITY, TONS	TOTAL COOLING CAPACITY, BTUH	SEER	TOTAL HEATING CAPACITY, BTUH	HSPF	ELECTRICAL VOLTAGE	ELECTRICAL MCA	ELECTRICAL MOCP	WEIGHT, LBS	SOUND DATA	BASIS OF DESIGN	CONNECTED FAN COIL UNIT
HP-1	AMENITY ROOM	4.0	46,500	14	46,000	8.2	208V/1P	28.8	50	280	73 dBA	CARRIER 25HHA436 (1)(2)(3)(4)(5)	FCU-1
HP-2	LEVEL 1 LOBBY	2.5	28,400	14.5	27,600	8.5	208V/1P	18.1	30	260	69 dBA	CARRIER 25HBC530 (1)(2)(3)(4)(5)	FCU-2

(1) ARI LISTED WITH ALL STANDARD FEATURES, INSTALLATION ACCESSORIES AND COMPRESSOR SHORT CYCLING PROTECTION. FILTER DRIVER, REFRIGERANT LINE FILTER, LIQUID SOLENOID VALVE, AND SAFETY PRESSURE SWITCHES. INSTALL REFRIGERANT TUBING AND LENGTH IN STRICT ACCORDANCE WITH MANUFACTURER'S RECOMMENDATION.
(2) PROVIDE ALL REQUIRED ACCESSORIES FOR LONG-LINE APPLICATIONS.
(3) ROUTING OF REFRIGERANT LINES FROM INDOOR TO OUTDOOR UNITS NOT SHOWN ON PLANS. CONTRACTOR TO FIELD COORDINATE ROUTING. ALL REFRIGERANT PIPES ARE TO BE ACOUSTICALLY ISOLATED (AND ATTACHED TO THE UNIT VIA A FLEXIBLE CONNECTION).
(4) REFRIGERANT SHALL BE R-410A.
(5) INDOOR AND OUTDOOR UNITS SHALL HAVE U.S. DOE CERTIFIED RATINGS.

DUCT INSULATION SCHEDULE

SERVICE	MATERIAL	R-VALUE (MIN. INSTALLED)	VAPOR RETARDER REQUIRED	NOTES
SUPPLY AIR DUCTS, CONCEALED WITHIN CONDITIONED SPACES	MINERAL-FIBER BLANKET	5.3	YES	PROVIDE INSULATION TO PREVENT CONDENSATION
SUPPLY AIR DUCTS, EXPOSED WITHIN CONDITIONED SPACES	NONE REQUIRED, UNLESS NOTED OTHERWISE	N/A	NO	
RETURN AIR DUCTS, CONCEALED OR EXPOSED WITHIN CONDITIONED SPACES	NONE REQUIRED, UNLESS NOTED OTHERWISE	N/A	NO	
OUTSIDE AIR DUCTS, CONCEALED OR EXPOSED WITHIN CONDITIONED SPACES (LESS THAN 2,800 CFM)	MINERAL-FIBER BLANKET	7.0	YES	MIN. R-VALUE PER SEC
ROUND & RECTANGULAR, SUPPLY, RETURN, & OUTSIDE AIR DUCTS DUCTS LOCATED OUTDOORS	CLOSED-CELL PHENOLIC FOAM	8.0	NO	FIELD APPLIED FOIL & PAPER JACKET

NOTE: ALL DUCT WORK SHALL BE INSULATED CONSISTENT WITH THE REQUIREMENTS OF THE 2015 SEATTLE ENERGY CODE.

MINIMUM REFRIGERANT PIPE INSULATION THICKNESS

FLUID DESIGN OPERATION TEMP. RANGE, °F	CONDUCTIVITY RANGE BTU*IN./(H*FT²*°F)	NOMINAL PIPE SIZE < 1	NOMINAL PIPE SIZE 1 TO <1-1/2	NOMINAL PIPE SIZE 1-1/2 TO < 4	NOMINAL PIPE SIZE 4 TO < 8	INSULATION MEAN RATING TEMPERATURE	MATERIAL	FIELD APPLIED JACKET	VAPOR RETARDER REQUIRED	FINISH
40-60	0.21 – 0.27	0.5	0.5	1.0	1.0	75	FLEXIBLE ELASTOMERIC	NONE	NO	NONE
BELOW 40	0.20 – 0.26	1.0	1.5	1.5	1.5	50	FLEXIBLE ELASTOMERIC	NONE	NO	NONE

NO.	DATE	DESCRIPTION
	1/14/21	PROGRESS SET
	2/02/21	PROGRESS SET

REVISIONS

MATTHEW D. BROOKS
STATE OF WASHINGTON
REGISTERED
PROFESSIONAL ENGINEER

DRAWN: BK/JP
DESIGNED: BK/JP
CHECKED: MB
APPROVED: MB

EMERALD CITY ENGINEERS, INC
21705 Highway 99
Lynnwood, WA 98036
TEL: 425-741-1200

PROJECT:
BLOSSOM APARTMENTS

DATE: **2/02/21**

SHEET TITLE:
SCHEDULES & CALCULATIONS

SHEET NO.
M001

COPYRIGHT 2021, EMERALD CITY ENGINEERS, INC.
J:\PARK J\1229-001 BLOSSOM MIRANT CITIES, SEATTLE, WA\DWG\M001 - SCHEDULES & CALCULATIONS.DWG 02-02-2021 22:04

STAIRWAY PRESSURIZATION NOTES

1. PROVIDE STAIR ENCLOSURE PRESSURIZATION FOR THIS PROJECT PER WASHINGTON STATE BUILDING CODE 504.4.1. STAIR PRESSURIZATION SHALL BE IN ACCORDANCE WITH SECTION 909.20.5 AND 909.11 OF THE IBC.
2. STAIR PRESSURIZATION SUPPLY FANS SHALL BE PROVIDED AT THE TOP OF EACH STAIR ENCLOSURE. ONE AIR INJECTION POINTS SHALL BE PROVIDED: ONE AT THE TOP OF THE STAIRWELL.
3. STAIR PRESSURIZATION SUPPLY FANS SHALL BE EQUIPPED WITH VFD'S FOR PROPER BALANCING. FAN SPEED SHALL BE ADJUSTED TO ENSURE STAIR ENCLOSURE PRESSURE IS MAINTAINED BETWEEN 0.10"WG AND 0.35"WG.
4. STAIR PRESSURIZATION SUPPLY FANS SHALL BE POWERED STANDBY EMERGENCY POWER COMPLYING WITH SECTION 909.11 OF THE IBC.
5. STAIR PRESSURIZATION SUPPLY FANS SHALL BE INTERLOCKED WITH BUILDING FIRE ALARM SYSTEM PER IBC SECTION 909.20.
6. STAIRWAYS SHALL BE PRESSURIZED TO A MINIMUM POSITIVE PRESSURE OF 0.10 INCH OF WATER COLUMN RELATIVE TO THE MAIN OCCUPIED AREA ON EACH FLOOR, AND A MAXIMUM PRESSURE THAT COMPLIES WITH 1008.1.3.
7. THE STAIRWAY PRESSURIZATION SHALL BE ACTIVATED BY ANY SMOKE CONTROL INITIATING DEVICE. SMOKE DETECTORS SHALL BE INSTALLED WITHIN 5 FEET OF DOORS EXITING INTO PRESSURIZED STAIRWAYS. ALSO, THE ELEVATOR HOISTWAY VENT (FAILS) OPEN ON ALL SMOKE CONTROL INITIATING EVENTS.
8. PRESSURIZATION EQUIPMENT AND ITS DUCT WORK LOCATED WITHIN THE BUILDING SHALL BE SEPARATED FROM OTHER PORTIONS OF THE BUILDING BY CONSTRUCTION EQUAL TO THAT REQUIRED BY THE EXIT ENCLOSURE.
9. SUPPLY AIR SHALL BE TAKEN DIRECTLY FROM AN OUTSIDE, UNCONTAMINATED SOURCE AT LEAST 20 FEET FROM ANY AIR EXHAUST SYSTEM OUR OUTLET. AIR DUCTS SHALL BE CONTINUOUS TO THE EXTERIOR OF THE BUILDING. TWO SMOKE DETECTORS SHALL BE LOCATED INSIDE THE DUCT IN ACCORDANCE WITH NFPA 72 ARRANGED TO AUTOMATICALLY SHUT DOWN THE FAN SYSTEM ONLY WHEN BOTH SMOKE DETECTORS ACTIVATE. THE DETECTORS SHALL BE LOCATED DOWNSTREAM OF THE FAN AND SHALL BE CONNECTED TO THE FIRE ALARM AS A SUPERVISORY SIGNAL.
10. OTHER MEASURES TO PREVENT LOSS OF PRESSURIZATION SHALL BE PROVIDED IN THE DESIGN AND CONSTRUCTION OF THE EXIT ENCLOSURES, SUCH AS DOOR AND DOOR CLOSERS, ADJUSTABLE DOOR BOTTOMS SHALL BE PROVIDED AT STAIRWAY DOORS, QUALITY OF WORKMANSHIP AND CAULKING OF PENETRATIONS AND JOINTS. (REF ARCHITECTURAL DRAWINGS FOR DETAILS AND NOTES)

ELEVATOR PRESSURIZATION NOTES

PER IBC 2015 SECTION 909.21:

909.21.1 ELEVATOR HOISTWAYS SHALL BE PRESSURIZED TO MAINTAIN A MINIMUM POSITIVE PRESSURE OF 0.10 INCHES OF WATER (25 PA) AND A MAXIMUM POSITIVE PRESSURE OF 0.25 INCHES OF WATER (67 PA) WITH RESPECT TO ADJACENT OCCUPIED SPACE ON ALL FLOORS. THIS PRESSURE SHALL BE MEASURED AT THE MIDPOINT OF EACH HOISTWAY DOOR, WITH ALL ELEVATOR CARS AT THE FLOOR OF RECALL AND ALL HOISTWAY DOORS ON THE FLOOR OF RECALL OPEN AND ALL OTHER HOISTWAY DOORS CLOSED. THE OPENING AND CLOSING OF HOISTWAY DOORS AT EACH LEVEL MUST BE DEMONSTRATED DURING THIS TEST. THE SUPPLY AIR INTAKE SHALL BE FROM AN OUTSIDE UNCONTAMINATED SOURCE LOCATED A MINIMUM DISTANCE OF 20 FEET (6096 MM) FROM ANY AIR EXHAUST SYSTEM OR OUTLET.

909.21.2 RATIONAL ANALYSIS. A RATIONAL ANALYSIS COMPLYING WITH SECTION 909.4 SHALL BE SUBMITTED WITH THE CONSTRUCTION DOCUMENTS.

909.21.3 DUCTS FOR SYSTEM. ANY DUCT SYSTEM THAT IS PART OF THE PRESSURIZATION SYSTEM SHALL BE PROTECTED WITH THE SAME FIRE-RESISTANCE RATING AS REQUIRED FOR THE ELEVATOR SHAFT ENCLOSURE.

909.21.4 FAN SYSTEM. THE FAN SYSTEM PROVIDED FOR THE PRESSURIZATION SYSTEM SHALL BE AS REQUIRED BY SECTIONS 909.21.4.1 THROUGH 909.21.4.4.

909.21.4.1 FIRE RESISTANCE. WHEN LOCATED WITHIN THE BUILDING, THE FAN SYSTEM THAT PROVIDES THE PRESSURIZATION SHALL BE PROTECTED WITH THE SAME FIRE-RESISTANCE RATING REQUIRED FOR THE ELEVATOR SHAFT ENCLOSURE.

909.21.4.2 SMOKE DETECTION. THE FAN SYSTEM SHALL BE EQUIPPED WITH A SMOKE DETECTOR THAT WILL AUTOMATICALLY SHUT DOWN THE FAN SYSTEM WHEN SMOKE IS DETECTED WITHIN THE SYSTEM. 909.21.4.3 SEPARATE SYSTEMS. A SEPARATE FAN SYSTEM SHALL BE USED FOR EACH ELEVATOR HOISTWAY.

909.21.4.4 FAN CAPACITY. THE SUPPLY FAN SHALL EITHER BE ADJUSTABLE WITH A CAPACITY OF AT LEAST 1,000 CFM (0.4719 M3/S) PER DOOR, OR THAT SPECIFIED BY A REGISTERED DESIGN PROFESSIONAL TO MEET THE REQUIREMENTS OF A DESIGNED PRESSURIZATION SYSTEM.

909.21.5 STANDBY POWER. THE PRESSURIZATION SYSTEM SHALL BE PROVIDED WITH STANDBY POWER FROM THE SAME SOURCE AS OTHER REQUIRED EMERGENCY SYSTEMS FOR THE BUILDING.

909.21.6 ACTIVATION OF PRESSURIZATION SYSTEM. THE ELEVATOR PRESSURIZATION SYSTEM SHALL BE ACTIVATED UPON ACTIVATION OF THE BUILDING FIRE ALARM SYSTEM OR UPON ACTIVATION OF THE ELEVATOR LOBBY SMOKE DETECTORS. WHERE BOTH A BUILDING FIRE ALARM SYSTEM AND ELEVATOR LOBBY SMOKE DETECTORS ARE PRESENT, EACH SHALL BE INDEPENDENTLY CAPABLE OF ACTIVATING THE PRESSURIZATION SYSTEM.

909.21.7 SPECIAL INSPECTION. SPECIAL INSPECTION FOR PERFORMANCE SHALL BE REQUIRED IN ACCORDANCE WITH SECTION 909.18.8. SYSTEM ACCEPTANCE SHALL BE IN ACCORDANCE WITH SECTION 909.19.

909.21.8 MARKING AND IDENTIFICATION. DETECTION AND CONTROL SYSTEMS SHALL BE MARKED IN ACCORDANCE WITH SECTION 909.14.

909.21.9 CONTROL DIAGRAMS. CONTROL DIAGRAMS SHALL BE PROVIDED IN ACCORDANCE WITH SECTION 909.15.

909.21.10 CONTROL PANEL. A CONTROL PANEL COMPLYING WITH SECTION 909.16 SHALL BE PROVIDED.

909.21.11 SYSTEM RESPONSE TIME. HOISTWAY PRESSURIZATION SYSTEMS SHALL COMPLY WITH THE REQUIREMENTS FOR SMOKE CONTROL SYSTEM RESPONSE TIME IN SECTION 909.17.

SMOKE CONTROL REPORT

IT IS THE RESPONSIBLITY OF THE CONTRACTOR TO FULLY REVIEW THE SMOKE CONTROL REPORT, IN ADDITION TO THESE DRAWINGS, FOR THE REQUIRED SCOPE OF WORK OF THE SMOKE CONTROL SYSTEM TO BE PROVIDED.

SEC COMMISSIONING REQUIREMENTS

BUILDING MECHANICAL SYSTEMS SHALL BE COMMISSIONED UNDER SEC C408:

A. A COMMISSIONING PLAN SHALL BE PROVIDED. TESTS MANDATED UNDER SECTION C408 SHALL BE PERFORMED AND RESULTS RECORDED. AT A MINIMUM, THE PLANS SHALL IDENTIFY THE FOLLOWING:
   - a.) A DETAILED EXPLANATION OF THE ORIGINAL DESIGN INTENT.
   - b.) EQUIPMENT AND SYSTEMS TO BE TESTED, INCLUDING THE EXTENT OF TESTS.
   - c.) FUNCTIONS TO BE TESTED (FOR EXAMPLE, CALIBRATION, ECONOMIZER CONTROL, ETC).
   - d.) CONDITIONS UNDER WHICH THE TEST SHALL BE PERFORMED (FOR EXAMPLE, WINTER AND SUMMER DESIGN CONDITIONS, FULL OUTSIDE AIR, ETC.).
   - e.) MEASURABLE CRITERIA FOR ACCEPTABLE PERFORMANCE.

B. SYSTEM TESTING AND BALANCING: ALL HVAC SYSTEMS SHALL BE BALANCED IN ACCORDANCE WITH GENERALLY ACCEPTED ENGINEERING STANDARDS. AIR AND WATER FLOW RATES SHALL BE MEASURED AND ADJUSTED TO DELIVER FINAL FLOW RATES WITHIN 10% OF DESIGN RATES. A WRITTEN BALANCE REPORT SHALL BE PROVIDED TO THE OWNER AFTER COMPLETION. EXCEPTION: HVAC SYSTEMS TIED TO SMOKE CONTROL SYSTEM.

C. AIR SYSTEMS BALANCING: AIR SYSTEMS SHALL BE BALANCED IN A MANNER TO FIRST MINIMIZE THROTTLING LOSSES THEN, FOR FANS WITH SYSTEM POWER OF GREATER THAN 1 HP, FAN SPEED SHALL BE ADJUSTED TO MEET DESIGN FLOW CONDITIONS.

D. EQUIPMENT & SYSTEMS TESTING: FUNCTIONAL PERFORMANCE TESTING SHALL DEMONSTRATE THE CORRECT INSTALLATION AND OPERATION OF EACH COMPONENT, SYSTEM, AND SYSTEM-TO-SYSTEM INTERTIE RELATIONSHIP IN ACCORDANCE WITH APPROVED PLANS AND SPECIFICATIONS. THIS DEMONSTRATION IS TO PROVE THE OPERATION, FUNCTION, AND MAINTENANCE SERVICEABILITY FOR EACH OF THE COMMISSIONED SYSTEMS. TESTING SHALL INCLUDE ALL MODES OF OPERATION, INCLUDING:
   - a.) ALL MODES AS DESCRIBED IN THE SEQUENCE OF OPERATIONS.
   - b.) REDUNDANT OR AUTOMATIC BACK-UP MODE.
   - c.) PERFORMANCE OF ALARMS.
   - d.) MODE OF OPERATION UPON A LOSS OF POWER AND RESTORED POWER.

E. CONTROLS TESTING: HVAC CONTROL SYSTEMS SHALL BE TESTED TO ENSURE THAT CONTROL DEVICES, COMPONENTS, EQUIPMENT AND SYSTEMS ARE CALIBRATED, ADJUSTED AND OPERATE IN ACCORDANCE WITH APPROVED PLANS AND SPECIFICATIONS. SEQUENCES OF OPERATION SHALL BE FUNCTIONALLY TESTED TO ENSURE THEY OPERATE IN ACCORDANCE WITH APPROVED PLANS AND SPECIFICATIONS.

F. PRELIMINARY COMMISSIONING REPORT: A PRELIMINARY REPORT OF COMMISSIONING TEST PROCEDURES AND RESULTS SHALL BE COMPLETED AND PROVIDED TO THE OWNER. THE PRELIMINARY COMMISSIONING REPORT SHALL IDENTIFY:
   - a.) DEFICIENCIES FOUND DURING TESTING REQUIRED BY THIS SECTION WHICH HAVE NOT BEEN CORRECTED AT THE TIME OF REPORT PREPARATION AND THE ANTICIPATED DATE OF CORRECTION.
   - b.) DEFERRED TESTS WHICH CANNOT BE PERFORMED AT THE TIME OF REPORT PREPARATION DUE TO CLIMATIC CONDITIONS.
   - c.) CLIMATIC CONDITIONS REQUIRED FOR PERFORMANCE OF THE DEFERRED TESTS, AND THE ANTICIPATED DATE OF EACH DEFERRED TEST.

G. POST CONSTRUCTION COMMISSIONING: POST CONSTRUCTION COMMISSIONING SHALL BE PROVIDED TO THE BUILDING OWNER. THIS SHALL INCLUDE AT A MINIMUM: REVIEW AND APPROVAL OF OPERATION AND MAINTENANCE MATERIALS, RECORD DRAWINGS AND SYSTEMS OPERATIONAL TRAINING. THIS IS IN ADDITION TO WHAT IS OUTLINED IN THE SPECIFICATIONS, THE MOST STRINGENT REQUIREMENTS OF THESE TWO SHALL APPLY.

H. OPERATION AND MAINTENANCE (O&M) MANUALS: THE O&M MANUAL SHALL BE IN ACCORDANCE WITH INDUSTRY ACCEPTED STANDARDS AND SHALL INCLUDE AT A MINIMUM:
   - a.) SUBMITTAL DATA STATING EQUIPMENT SIZE AND SELECTED OPTIONS FOR EACH PIECE OF EQUIPMENT REQUIRING MAINTENANCE.
   - b.) OPERATION AND MAINTENANCE MANUALS FOR EACH PIECE OF EQUIPMENT REQUIRING MAINTENANCE, EXCEPT EQUIPMENT NOT FURNISHED AS PART OF THE PROJECT. REQUIRED ROUTINE MAINTENANCE ACTIONS SHALL BE CLEARLY IDENTIFIED.
   - c.) NAMES AND ADDRESSES OF AT LEAST ONE SERVICE AGENCY.
   - d.) HVAC CONTROLS SYSTEM MAINTENANCE AND CALIBRATION INFORMATION, INCLUDING WIRING DIAGRAMS, SCHEMATICS, AND CONTROL SEQUENCE DESCRIPTIONS. DESIRED OR FIELD DETERMINED SET POINTS SHALL BE PERMANENTLY RECORDED ON CONTROL DRAWINGS AT CONTROL DEVICES, OR, FOR DIGITAL CONTROL SYSTEMS, IN PROGRAMMING COMMENTS.
   - e.) A COMPLETE NARRATIVE OF HOW EACH SYSTEM IS INTENDED TO OPERATE, INCLUDING (SEQUENCE OF OPERATION IS NOT ACCEPTABLE AS A NARRATIVE FOR THIS REQUIREMENT):
     - i.) A DETAILED EXPLANATION OF THE ORIGINAL DESIGN INTENT.
     - ii.) THE BASIS OF DESIGN (HOW THE DESIGN WAS SELECTED TO MEET THE DESIGN INTENT)
     - iii.) A DETAILED EXPLANATION OF HOW NEW EQUIPMENT IS TO INTERFACE WITH EXISTING EQUIPMENT OR SYSTEMS (WHERE APPLICABLE).
     - iv.) SUGGESTED SET POINTS.

I. RECORD DRAWINGS: RECORD DRAWINGS SHALL INCLUDE AT A MINIMUM THE LOCATION AND PERFORMANCE DATA ON EACH PIECE OF EQUIPMENT, GENERAL CONFIGURATION OF DUCT AND PIPE DISTRIBUTION SYSTEMS, INCLUDING SIZES, AND THE TERMINAL AIR AND WATER DESIGN FLOW RATES OF THE ACTUAL INSTALLATION.

J. SYSTEMS OPERATIONAL TRAINING: THE TRAINING OF THE APPROPRIATE MAINTENANCE STAFF FOR EACH EQUIPMENT TYPE AND/OR SYSTEM SHALL INCLUDE, AT A MINIMUM:
   - a.) SYSTEM/EQUIPMENT OVERVIEW (WHAT IT IS, WHAT IT DOES, WHICH OTHER SYSTEMS AND/OR EQUIPMENT DOES IT INTERFACE WITH).
   - b.) REVIEW OF THE AVAILABLE O&M MANUALS.
   - c.) REVIEW OF THE RECORD DRAWINGS ON THE SUBJECT SYSTEM/EQUIPMENT.
   - d.) HANDS-ON DEMONSTRATION OF ALL NORMAL MAINTENANCE PROCEDURES, NORMAL OPERATING MODES, AND ALL EMERGENCY SHUTDOWN AND START-UP PROCEDURES.

K. FINAL COMMISSIONING REPORT: A COMPLETE REPORT OF TEST PROCEDURES AND RESULTS SHALL BE PREPARED AND FILED WITH THE OWNER. THE FINAL COMMISSIONING REPORT SHALL IDENTIFY:
   - a.) RESULTS OF ALL FUNCTIONAL PERFORMANCE TESTS.
   - b.) DISPOSITION OF ALL DEFICIENCIES FOUND DURING TESTING, INCLUDING DETAILS OF CORRECTIVE MEASURES USED OR PROPOSED.
   - c.) ALL FUNCTIONAL PERFORMANCE TEST PROCEDURES USED DURING THE COMMISSIONING PROCESS INCLUDING MEASURABLE CRITERIA FOR TEST ACCEPTANCE, PROVIDED HEREIN FOR REPEATABILITY. DEFERRED TESTS WHICH CANNOT BE PERFORMED AT THE TIME OF REPORT PREPARATION DUE TO CLIMATIC CONDITIONS ARE EXEMPT FROM THIS REQUIREMENT.

L. ACCEPTANCE REQUIREMENTS: BUILDINGS OR PORTIONS THEREOF, REQUIRED BY THIS CODE TO COMPLY WITH THIS SECTION, SHALL NOT BE ISSUED A FINAL CERTIFICATE OF OCCUPANCY UNTIL SUCH TIME THAT THE BUILDING OFFICIAL DETERMINES THAT THE PRELIMINARY COMMISSIONING REPORT REQUIRED UNDER [F] HAS BEEN COMPLETED.

M. LEAKAGE TESTING: THE COMPLETED BUILDING SHALL BE TESTED FOR AIR LEAKAGE AND THE AIR LEAKAGE RATE OF THE BUILDING ENVELOPE SHALL NOT EXCEED 0.30 CFM PER SQ. FT. AT A PRESSURE DIFFERENTIAL OF 0.30 INCHES WATER GAUGE AT THE UPPER 95 PERCENT CONFIDENCE INTERVAL IN ACCORDANCE WITH ASTM E 779 OR AN EQUIVALENT METHOD APPROVED BY THE CODE OFFICIAL. A REPORT THAT INCLUDES THE TESTED SURFACE AREA, FLOOR AREA, AIR BY VOLUME, STORIES ABOVE GRADE, AND LEAKAGE RATES SHALL BE SUBMITTED TO THE BUILDING OWNER AND THE CODE OFFICIAL PER SEC C402.5.1.2. THE AIR LEAKAGE TESTING REQUIREMENTS SHALL BE NOTED ON THE DRAWINGS. CONSTRUCTION DOCUMENTS SHALL ALSO CONTAIN A DIAGRAM SHOWING THE BUILDING'S PRESSURE BOUNDARY IN PLANS AND SECTIONS AND A CALCULATION OF THE AREA OF THE PRESSURE BOUNDARY TO BE CONSIDERED IN THE TEST PER SEC C402.5.1.1 ITEM 5.

NOTE: EMERALD CITY ENGINEERS IS NOT THE COMMISSIONING AGENT.

ENERGY CODE NOTES

EQUIPMENT SIZING & PERFORMANCE

1) ALL HVAC SYSTEMS HAVE BEEN SIZED PER ASHRAE STANDARD 183 OR EQUIVALENT.
2) THE SIZING OF THE SYSTEMS SHOWN ON THE PLANS DO NOT EXCEED THE LOAD REQUIRED FOR THE SPACE.
3) MECHANICAL VENTILATION PROVIDED IS THE MINIMUM REQUIRED PER CHAPTER 4 OF THE INTERNATIONAL MECHANICAL CODE.
4) MOTORS FOR FANS THAT ARE 1/12 HP OR GREATER AND LESS THAN 1 HP SHALL BE ELECTRONICALLY COMMUTATED MOTORS OR SHALL HAVE A MINIMUM MOTOR EFFICIENCY OF 70% WHEN RATED IN ACCORDANCE WITH DOE 10 C.F.R. 431. THESE MOTORS SHALL ALSO HAVE THE MEANS TO ADJUST MOTOR SPEED FOR EITHER BALANCING OR REMOTE CONTROL. BELT-DRIVEN FANS MAY USE SHEAVE ADJUSTMENTS FOR AIRFLOW BALANCING IN LIEU OF VARYING MOTOR SPEED.

HVAC SYSTEM CONTROLS & CRITERIA

1) ALL DUCTWORK ON THIS PROJECT IS LOW-PRESSURE. THERE ARE NO MEDIUM OR HIGH PRESSURE DUCT SYSTEMS.
2) UNITARY AIR COOLED HEAT PUMPS SHALL INCLUDE MICROPROCESSOR CONTROLS THAT MINIMIZE SUPPLEMENTAL HEAT USAGE DURING START-UP, SET-UP, AND DEFROST CONDITIONS. THESE CONTROLS SHALL ANTICIPATE NEED FOR HEAT AND USE COMPRESSION HEATING AS THE FIRST STAGE OF HEAT. CONTROLS SHALL INDICATE WHEN SUPPLEMENTAL HEATING IS BEING USED THROUGH VISUAL MEANS (EG. LED INDICATORS).
3) HEAT PUMPS EQUIPPED WITH SUPPLEMENTARY HEATERS SHALL BE INSTALLED WITH CONTROLS THAT PREVENT SUPPLEMENTAL HEATER OPERATION ABOVE 40°F.
4) WHERE USED TO CONTROL BOTH HEATING AND COOLING, ZONE THERMOSTATIC CONTROLS SHALL PROVIDE A TEMPERATURE RANGE OR DEADBAND OF AT LEAST 5°F WITHIN WHICH THE SUPPLY OF HEATING AND COOLING ENERGY TO THE ZONE IS CAPABLE OF BEING SHUT OFF OR REDUCED TO A MINIMUM.
5) FOR ALL OCCUPANCIES OTHER THAN GROUP R, EACH ZONE SHALL BE PROVIDED WITH THERMOSTATIC SETBACK CONTROLS THAT ARE CONTROLLED BY EITHER AN AUTOMATIC TIME CLOCK OR PROGRAMMABLE CONTROL SYSTEM. THERMOSTATIC SETBACK CONTROLS SHALL HAVE THE CAPABILITY TO SET BACK OR TEMPORARILY OPERATE THE SYSTEM TO MAINTAIN ZONE TEMPERATURES DOWN TO 55°F OR UP TO 85°F. AUTOMATIC TIME CLOCK OR PROGRAMMABLE CONTROLS SHALL BE CAPABLE OF STARTING AND STOPPING THE SYSTEM FOR SEVEN DIFFERENT DAILY SCHEDULES PER WEEK AND RETAINING THEIR PROGRAMMING AND TIME SETTING DURING A LOSS OF POWER FOR AT LEAST 10 HOURS. ADDITIONALLY, THE CONTROLS SHALL HAVE A MANUAL OVERRIDE THAT ALLOWS TEMPORARY OPERATION OF THE SYSTEM FOR UP TO 2 HOURS; A MANUALLY OPERATED TIMER CAPABLE OF BEING ADJUSTED TO OPERATE THE SYSTEM FOR UP TO 2 HOURS; OR AN OCCUPANCY SENSOR.
6) AUTOMATIC START CONTROLS SHALL BE PROVIDED FOR EACH HVAC UNIT. THE CONTROLS SHALL BE CAPABLE OF AUTOMATICALLY ADJUSTING THE DAILY START TIME OF THE HVAC SYSTEM IN ORDER TO BRING EACH SPACE TO THE DESIRED OCCUPIED TEMPERATURE IMMEDIATELY PRIOR TO SCHEDULED OCCUPANCY.
7) OUTDOOR AIR SUPPLY, EXHAUST OPENINGS AND RELIEF OUTLETS AND STAIRWAY AND SHAFT VENTS SHALL BE PROVIDED WITH CLASS I MOTORIZED DAMPERS. DAMPERS SHALL HAVE A MAXIMUM LEAKAGE RATE OF 4 CFM/SF AT 1.0" WATER GAUGE. NOTE: GRAVITY DAMPERS ARE PERMITTED IN LIEU OF MOTOR DAMPERS FOR SYSTEMS NOT EXCEEDING 400 CFM.
8) THE PRIMARY SPACE CONDITIONING SYSTEM WITHIN EACH GUESTROOM SHALL BE PROVIDED WITH AT LEAST ONE PROGRAMMABLE THERMOSTAT FOR THE REGULATION OF SPACE TEMPERATURE. THE THERMOSTAT SHALL ALLOW FOR A SETBACK AND SET-UP OF TEMPERATURE SETPOINT BY AT LEAST 5°F AS CONTROLLED VIA OCCUPANCY SENSOR.

DUCTING SYSTEMS

1) ALL DUCTWORK ON THIS PROJECT IS LOW-PRESSURE. THERE ARE NO MEDIUM OR HIGH PRESSURE DUCT SYSTEMS.
2) DUCTS, SHAFTS, AND PLENUMS CONVEYING OUTSIDE AIR FROM THE EXTERIOR OF THE BUILDING TO THE MECHANICAL SYSTEM SHALL MEET ALL AIR LEAKAGE AND BUILDING ENVELOPE INSULATION REQUIREMENTS OF SECTION C402 (0.40 CFM/SF) PLUS BUILDING ENVELOPE VAPOR CONTROL REQUIREMENTS FROM THE INTERNATIONAL BUILDING CODE, EXTENDING CONTINUOUSLY FROM THE BUILDING EXTERIOR TO AN AUTOMATIC SHUTOFF DAMPER OR HEATING OR COOLING EQUIPMENT.
3) DUCTWORK SHALL BE CONSTRUCTED AND ERECTED IN ACCORDANCE WITH THE INTERNATIONAL MECHANICAL CODE. ALL LONGITUDINAL AND TRANSVERSE JOINTS, SEAMS, AND CONNECTIONS TO SUPPLY AND RETURN DUCTS SHALL BE SECURELY FASTENED AND SEALED WITH WELDS, GASKETS, MASTICS, MASTIC-PLUS EMBEDDED FABRIC SYSTEMS OR TAPES INSTALLED IN ACCORDANCE WITH THE MANUFACTURER'S INSTALLATION INSTRUCTIONS.

END-USE METERING

1) METERS SHALL BE PROVIDED TO COLLECT ENERGY USE DATA FOR EACH END-USE CATEGORY LISTED IN WSEC SECTIONS C409.3.1 THROUGH C409.3.2. THE METERS SHALL COLLECT DATA FOR THE WHOLE BUILDING OR FOR EACH SEPARATELY METERED PORTION OF THE BUILDING WERE NOT EXEMPTED BY THE EXCEPTIONS OF WSEC SECTION C409.1. MULTIPLE METERS MAY BE USED FOR ANY END-USE CATEGORY, PROVIDED THAT THE DATA ACQUISISTION SYSTEM TOTALS ALL OF THE ENERGY USED BY THAT CATEGORY. FOR THIS PROJECT, THIS WILL APPLY TO THE HVAC SYSTEMS AND SERVICE WATER HEATERS FOR THE HOTEL.

PROJECT CLOSE OUT DOCUMENTATION

1) PROJECT CLOSE OUT DOCUMENATION AND TRAINING OF BUILDIGN OPERATIONS PERSONNEL IS REQUIRED FOR ALL MECHANICAL COMPONENTS, EQUIPMENT, AND SYSTEMS GOVERNED BY THE WSEC. CLOSE OUT DOCUMENTATION SHALL INCLUDE: RECORD DOCUMENTS, O&M MANUALS, APPLICABLE WSEC COMPLIANCE FORMS AND CALCULATIONS.

NO.	DATE	DESCRIPTION
	1/14/21	PROGRESS SET
	2/02/21	PROGRESS SET

REVISIONS

MATTHEW D. BROOKS
STATE OF WASHINGTON
54406
REGISTERED
PROFESSIONAL ENGINEER

DRAWN: BK/JP
DESIGNED: BK/JP
CHECKED: MB
APPROVED: MB

EMERALD CITY ENGINEERS, INC
21705 Highway 99
Lynnwood, WA 98036
TEL: 425-741-1200

PROJECT: BLOSSOM APARTMENTS

DATE: 2/02/21

SHEET TITLE: CALCULATIONS & NOTES

SHEET NO. M002

COPYRIGHT 2021, EMERALD CITY ENGINEERS, INC.
JPARK J:\2329-001 BLOSSOM VIBRANT CITIES, SEATTLE, WA\DWG\M002 - CALCULATIONS & NOTES.DWG 02-02-2021 22:04

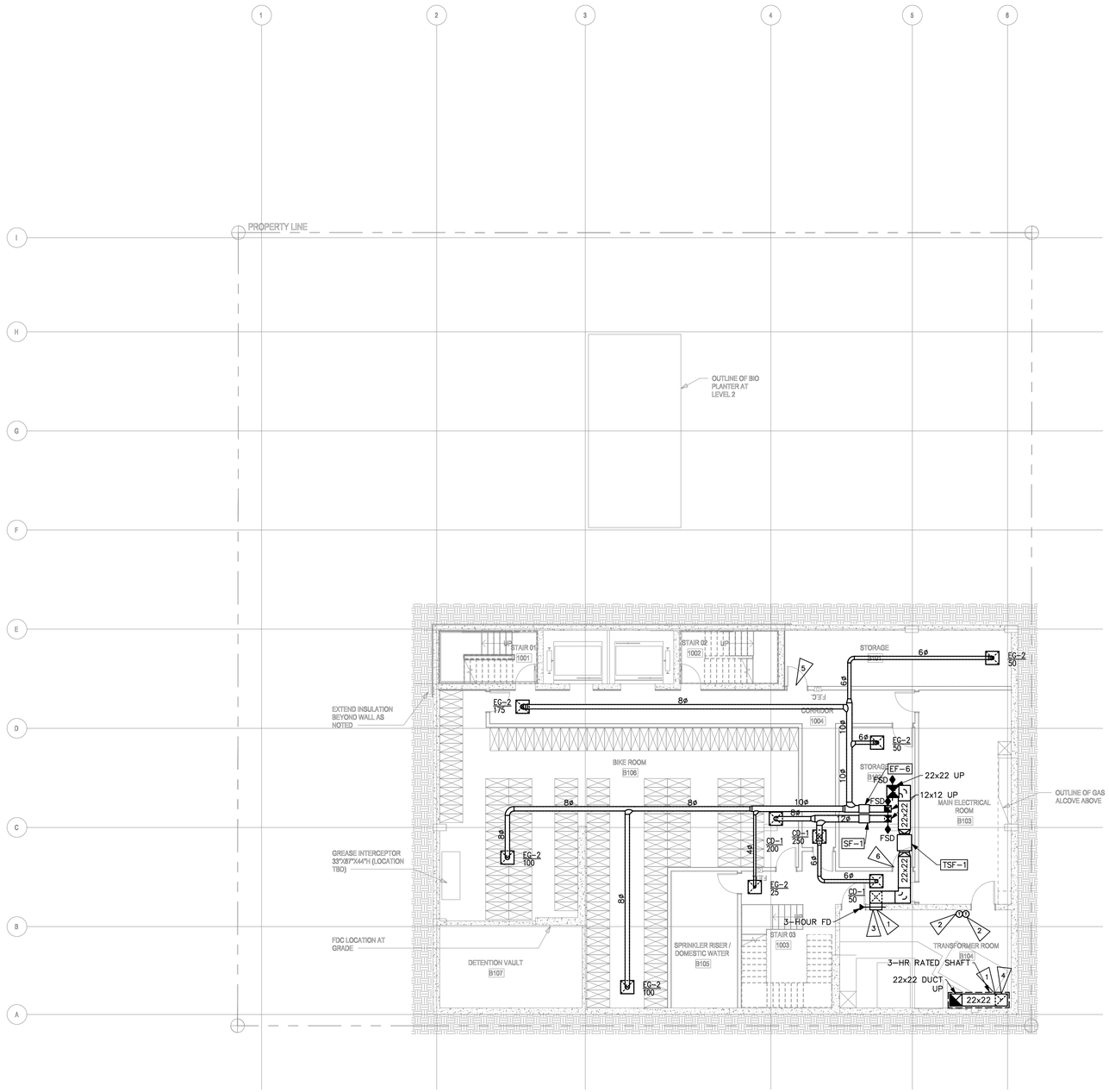

BASEMENT PLAN

SCALE: 1/8" = 1'-0"

N

PLAN NOTES:

1. FOR DETAILED INFORMATION ON DUCT SIZES, HVAC EQUIPMENT LABELS, AND ACCESS PANELS LOCATED IN UNITS, REFER TO ENLARGED UNIT PLANS ON THE M3 SERIES SHEETS.
2. RESTROOM & CORRIDOR EXHAUST SHALL TERMINATE MIN. 3'-0" FROM ANY OPENINGS INTO THE BUILDING AND 10'-0" FROM INTAKES. OTHER EXHAUST SHALL TERMINATE MIN. 10'-0" FROM OPENINGS AND INTAKES
3. PLUMBING CONTRACTOR SHALL PROVIDE CONDENSATE PIPING AND EQUIPMENT FOR CONDENSATE DRAINAGE OF ALL HVAC UNITS. PIPING MATERIAL SHALL BE TYPE M COPPER. REFER TO PLUMBING DRAWINGS FOR ADDITIONAL INFORMATION.
4. DUCT PENETRATIONS IN FIRE-RATED EXTERIOR WALLS SHALL COME WITH FIRE DAMPERS OF EQUAL OR GREATER RATING.

FLAG NOTES:

1. INTERIOR VAULT FACE VENTILATION OPENINGS SHALL BE COVERED WITH A 0.12-IN DIAMETER MINIMUM METAL GRATINGS WITH 1/2-IN MAXIMUM MESH OPENINGS TO PREVENT RODENT INTRUSION. GRATINGS SHALL BE MCNICHOLS WIRE MESH 3658220041 OR 3658220048 OR EQUAL WITH APPROVAL PRIOR TO ROUGH-IN. GRATING SHALL BE FLUSH WITH WALL.
2. A DEDICATED THERMOSTAT WILL ACTIVATE THE FANS AT 70 DEGREES F. THE SECOND DEDICATED THERMOSTAT WILL TURN OFF THE FANS AT 140 DEGREES F.

   THERMOSTATS SHALL BE ANALOG (DIAL) TYPE (HONEYWELL T631A-C TYPE FARM-O-STAT, MODEL NO. T631A1022). LOCATE THERMOSTATS ON AN INTERIOR WALL WITHIN 3 FT OF AN ENTRY DOOR, 5 FT ABOVE FINISHED FLOOR, AND IN DEAD AIR SPACE. CONFIRM FINAL LOCATION WITH SCL PRIOR TO ROUGH-IN.
3. INTAKE VENTS SHALL BE LOCATED AT LEAST 18 IN ABOVE THE EXTERIOR FLOORS. THE INTAKE VENTS SHALL BE LOCATED IN THE LOWER THIRD OF THE INTERIOR WALLS OF THE VAULT. THE BOTTOM OF THE VENT SHALL BE LOCATED 18-24 INCHES ABOVE THE FINISHED VAULT FLOOR.
4. THE EXHAUST VENTS SHALL BE AS NEAR TO THE CEILING AS POSSIBLE (IN THE UPPER THIRD OF THE WALL) OR IN THE ROOF OR CEILING OF THE VAULT. EXHAUST SHALL VENT DIRECTLY TO THE OUTSIDE OF THE BUILDING OR SHALL BE DUCTED, USING THREE-HOUR RATED MATERIAL. EXHAUST CANNOT VENT TO A COVERED PARKING AREA OR GARAGE.
5. PROVIDE UNDERCUT IN DOOR FOR MAKE UP AIR

NO.	DATE	DESCRIPTION
	1/14/21	PROGRESS SET
	2/02/21	PROGRESS SET

REVISIONS

MATTHEW D. BROOKS
STATE OF WASHINGTON
REGISTERED
PROFESSIONAL ENGINEER

DRAWN: BK/JP
DESIGNED: BK/JP
CHECKED: MB
APPROVED: MB

EMERALD CITY ENGINEERS, INC
21705 Highway 99
Lynnwood, WA 98036
TEL: 425-741-1200

PROJECT:
BLOSSOM APARTMENTS

DATE: **2/02/21**

SHEET TITLE:
BASEMENT LEVEL FLOOR PLAN

SHEET NO.
M200

COPYRIGHT 2021, EMERALD CITY ENGINEERS, INC.

JPARK J:\2329-001 BLOSSOM VIBRANT CITIES, SEATTLE, WA\DWG\M200 BASEMENT FLOOR PLAN.DWG 02-03-2021 08:56

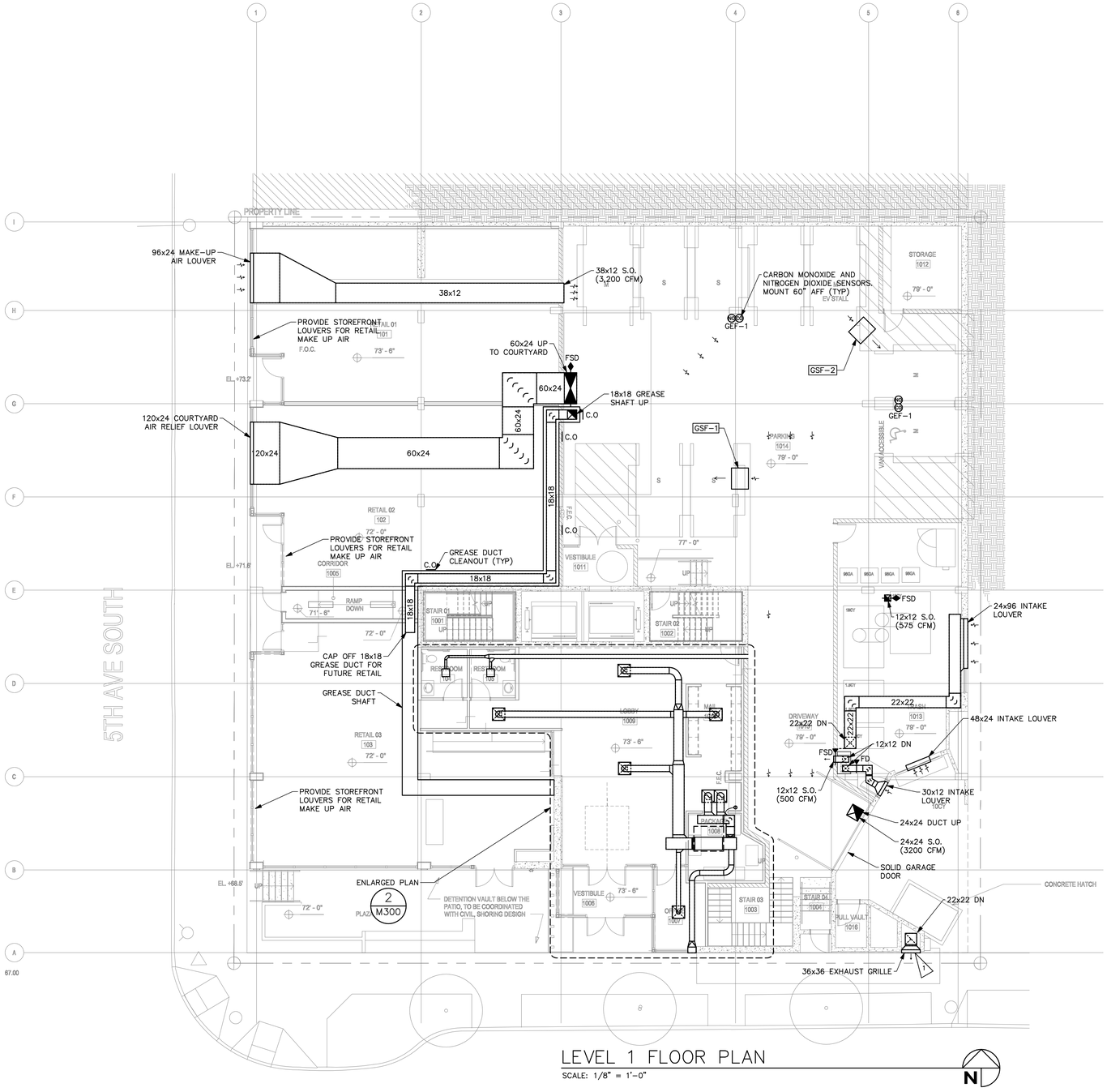

LEVEL 1 FLOOR PLAN

SCALE: 1/8" = 1'-0"

N

S MAIN ST 9.3% AT EXISTING ALLEY

PLAN NOTES:

1. FOR DETAILED INFORMATION ON DUCT SIZES, HVAC EQUIPMENT LABELS, AND ACCESS PANELS LOCATED IN UNITS, REFER TO ENLARGED UNIT PLANS ON THE M3 SERIES SHEETS.
2. RESTROOM & CORRIDOR EXHAUST SHALL TERMINATE MIN. 3'-0" FROM ANY OPENINGS INTO THE BUILDING AND 10'-0" FROM INTAKES. OTHER EXHAUST SHALL TERMINATE MIN. 10'-0" FROM OPENINGS AND INTAKES
3. PLUMBING CONTRACTOR SHALL PROVIDE CONDENSATE PIPING AND EQUIPMENT FOR CONDENSATE DRAINAGE OF ALL HVAC UNITS. PIPING MATERIAL SHALL BE TYPE M COPPER. REFER TO PLUMBING DRAWINGS FOR ADDITIONAL INFORMATION.
4. DUCT PENETRATIONS IN FIRE-RATED EXTERIOR WALLS SHALL COME WITH FIRE DAMPERS OF EQUAL OR GREATER RATING.

GARAGE NOTES:

CO = CARBON MONOXIDE SENSOR (MOUNT CO SENSOR 60" AFF.)

NO = NITROGEN DIOXIDE SENSOR (MOUNT NO SENSOR 60" AFF.)

CO AND NO SENSORS TO BE CONNECTED TO GEF-1. SENSORS TO TIE INTO FAN OPERATION.

FLAG NOTES:

1. EXHAUST VENTILATION OPENINGS AND DUCT TERMINATIONS SHALL BE LOCATED A MINIMUM OF 9 FT ABOVE ADJOINING GRADE AND FINISHED WALKING SURFACES. EXHAUST OPENINGS AND DUCT TERMINATIONS SHALL BE LOCATED A MINIMUM OF 10 FEET FROM FIRE ESCAPES, MEANS OF EGRESS, COMBUSTIBLE MATERIALS, ANY DOORS, WINDOWS, OR OPENINGS, AND PROPERTY LINES. CONFIRM ADDITIONAL EXHAUST CLEARANCES WITH THE AUTHORITY HAVING JURISDICTION.

NO.	DATE	DESCRIPTION
	1/14/21	PROGRESS SET
	2/02/21	PROGRESS SET

REVISIONS

MATTHEW D. BROOKS
STATE OF WASHINGTON
REGISTERED PROFESSIONAL ENGINEER

DRAWN: BK/JP
DESIGNED: BK/JP
CHECKED: MB
APPROVED: MB

EMERALD CITY ENGINEERS, INC
21705 Highway 99
Lynnwood, WA 98036
TEL: 425-741-1200

PROJECT:
BLOSSOM APARTMENTS

DATE: 2/02/21

SHEET TITLE:
LEVEL 1 FLOOR PLAN

SHEET NO.
M201

COPYRIGHT 2021, EMERALD CITY ENGINEERS, INC.
JPARK J:\2329-001 BLOSSOM VIBRANT CITIES, SEATTLE, WA\DWG\M201 LEVEL 1 FLOOR PLAN.DWG 02-03-2021 08:56

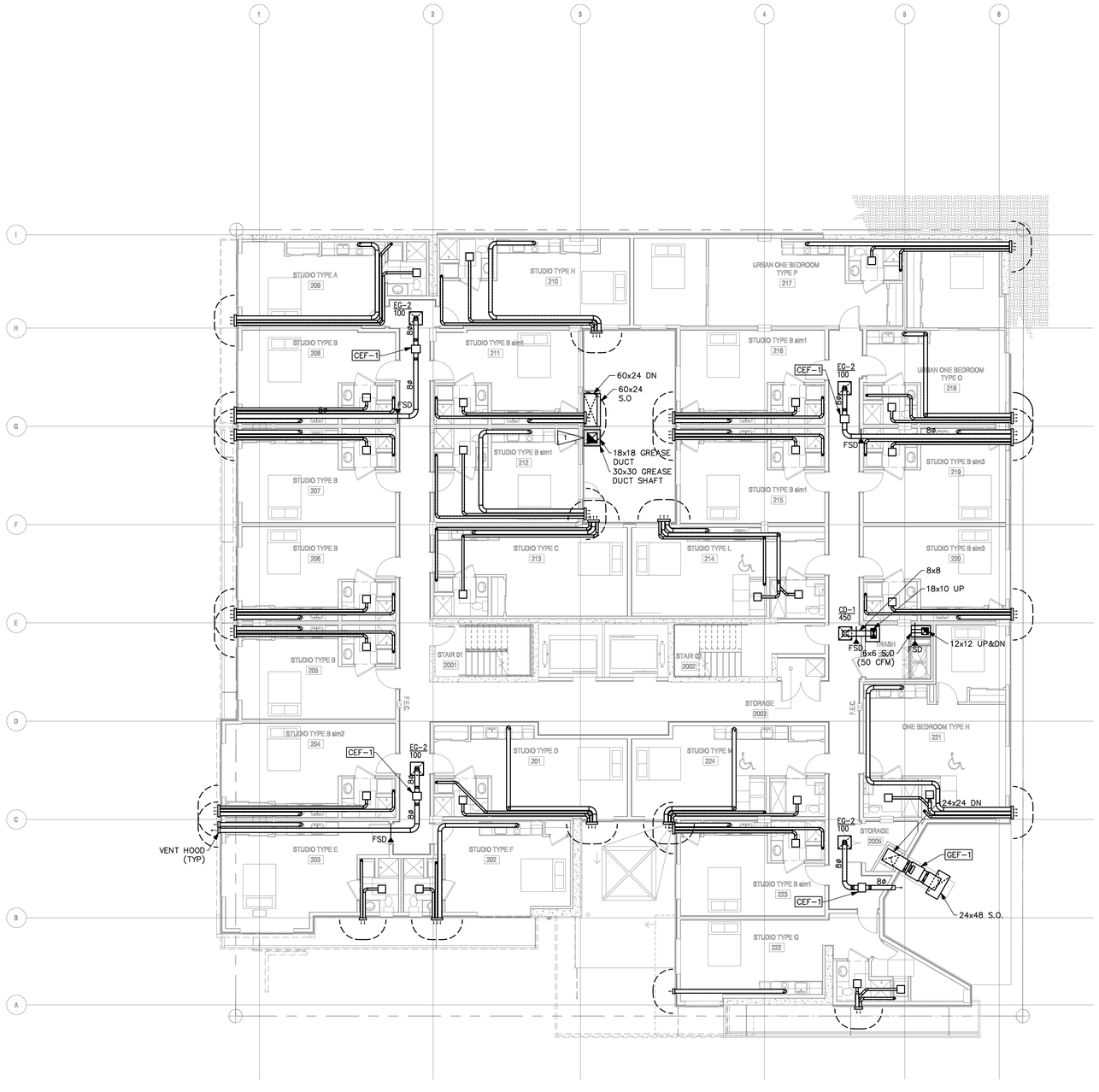

LEVEL 2 FLOOR PLAN

SCALE: 1/8" = 1'-0"

N

PLAN NOTES:

1. FOR DETAILED INFORMATION ON DUCT SIZES, HVAC EQUIPMENT LABELS, AND ACCESS PANELS LOCATED IN UNITS, REFER TO ENLARGED UNIT PLANS ON THE M3 SERIES SHEETS.
2. RESTROOM & CORRIDOR EXHAUST SHALL TERMINATE MIN. 3'-0" FROM ANY OPENINGS INTO THE BUILDING AND 10'-0" FROM INTAKES. OTHER EXHAUST SHALL TERMINATE MIN. 10'-0" FROM OPENINGS AND INTAKES
3. PLUMBING CONTRACTOR SHALL PROVIDE CONDENSATE PIPING AND EQUIPMENT FOR CONDENSATE DRAINAGE OF ALL HVAC UNITS. PIPING MATERIAL SHALL BE TYPE M COPPER. REFER TO PLUMBING DRAWINGS FOR ADDITIONAL INFORMATION.
4. DUCT PENETRATIONS IN FIRE-RATED EXTERIOR WALLS SHALL COME WITH FIRE DAMPERS OF EQUAL OR GREATER RATING.

FLAG NOTES:

1 — 2-HOUR RATED SELF CLOSING CLEANOUT ACCESS DOOR. PROVIDE ACCESS DOORS AT EACH FLOOR OF THE VERTICAL TYPE 1 DUCT RISERS FOR INSPECTION AND CLEANING.

NO.	DATE	DESCRIPTION
	1/14/21	PROGRESS SET
	2/02/21	PROGRESS SET

REVISIONS

MATTHEW D. BROOKS
STATE OF WASHINGTON
REGISTERED
PROFESSIONAL ENGINEER

DRAWN: BK/JP
DESIGNED: BK/JP
CHECKED: MB
APPROVED: MB

EMERALD CITY ENGINEERS, INC
21705 Highway 99
Lynnwood, WA 98036
TEL: 425-741-1200

PROJECT:
BLOSSOM APARTMENTS

DATE: **2/02/21**

SHEET TITLE:
LEVEL 2 FLOOR PLAN

SHEET NO.
M202

COPYRIGHT 2021, EMERALD CITY ENGINEERS, INC.
JPARK J:\2329-001 BLOSSOM MIRANT CITIES, SEATTLE, WA\DWG\M202 LEVEL 2 FLOOR PLAN.DWG 02-03-2021 08:55

LEVEL 3 FLOOR PLAN

SCALE: 1/8" = 1'-0"

N

PLAN NOTES:

1. FOR DETAILED INFORMATION ON DUCT SIZES, HVAC EQUIPMENT LABELS, AND ACCESS PANELS LOCATED IN UNITS, REFER TO ENLARGED UNIT PLANS ON THE M3 SERIES SHEETS.
2. RESTROOM & CORRIDOR EXHAUST SHALL TERMINATE MIN. 3'-0" FROM ANY OPENINGS INTO THE BUILDING AND 10'-0" FROM INTAKES. OTHER EXHAUST SHALL TERMINATE MIN. 10'-0" FROM OPENINGS AND INTAKES
3. PLUMBING CONTRACTOR SHALL PROVIDE CONDENSATE PIPING AND EQUIPMENT FOR CONDENSATE DRAINAGE OF ALL HVAC UNITS. PIPING MATERIAL SHALL BE TYPE M COPPER. REFER TO PLUMBING DRAWINGS FOR ADDITIONAL INFORMATION.
4. DUCT PENETRATIONS IN FIRE-RATED EXTERIOR WALLS SHALL COME WITH FIRE DAMPERS OF EQUAL OR GREATER RATING.

FLAG NOTES:

1 — 2-HOUR RATED SELF CLOSING CLEANOUT ACCESS DOOR. PROVIDE ACCESS DOORS AT EACH FLOOR OF THE VERTICAL TYPE 1 DUCT RISERS FOR INSPECTION AND CLEANING.

NO.	DATE	DESCRIPTION
	1/14/21	PROGRESS SET
	2/02/21	PROGRESS SET

REVISIONS

MATTHEW D. BROOKS — STATE OF WASHINGTON — REGISTERED PROFESSIONAL ENGINEER

DRAWN: BK/JP
DESIGNED: BK/JP
CHECKED: MB
APPROVED: MB

EMERALD CITY ENGINEERS, INC
21705 Highway 99
Lynnwood, WA 98036
TEL: 425-741-1200

PROJECT:
BLOSSOM APARTMENTS

DATE: **2/02/21**

SHEET TITLE:
LEVEL 3 FLOOR PLAN

SHEET NO.
M203

COPYRIGHT 2021, EMERALD CITY ENGINEERS, INC.
JPARK J:\2329-001 BLOSSOM MIRANT CITIES, SEATTLE, WA\DWG\M203 LEVEL 3 FLOOR PLAN.DWG 02-03-2021 08:55

LEVEL 4 FLOOR PLAN

SCALE: 1/8" = 1'-0"

N

PLAN NOTES:

1. FOR DETAILED INFORMATION ON DUCT SIZES, HVAC EQUIPMENT LABELS, AND ACCESS PANELS LOCATED IN UNITS, REFER TO ENLARGED UNIT PLANS ON THE M3 SERIES SHEETS.
2. RESTROOM & CORRIDOR EXHAUST SHALL TERMINATE MIN. 3'-0" FROM ANY OPENINGS INTO THE BUILDING AND 10'-0" FROM INTAKES. OTHER EXHAUST SHALL TERMINATE MIN. 10'-0" FROM OPENINGS AND INTAKES
3. PLUMBING CONTRACTOR SHALL PROVIDE CONDENSATE PIPING AND EQUIPMENT FOR CONDENSATE DRAINAGE OF ALL HVAC UNITS. PIPING MATERIAL SHALL BE TYPE M COPPER. REFER TO PLUMBING DRAWINGS FOR ADDITIONAL INFORMATION.
4. DUCT PENETRATIONS IN FIRE-RATED EXTERIOR WALLS SHALL COME WITH FIRE DAMPERS OF EQUAL OR GREATER RATING.

FLAG NOTES:

1 — 2-HOUR RATED SELF CLOSING CLEANOUT ACCESS DOOR. PROVIDE ACCESS DOORS AT EACH FLOOR OF THE VERTICAL TYPE 1 DUCT RISERS FOR INSPECTION AND CLEANING.

NO.	DATE	DESCRIPTION
	1/14/21	PROGRESS SET
	2/02/21	PROGRESS SET

REVISIONS

MATTHEW D. BROOKS — STATE OF WASHINGTON — REGISTERED PROFESSIONAL ENGINEER

DRAWN: BK/JP
DESIGNED: BK/JP
CHECKED: MB
APPROVED: MB

EMERALD CITY ENGINEERS, INC
21705 Highway 99
Lynnwood, WA 98036
TEL: 425-741-1200

PROJECT:
BLOSSOM APARTMENTS

DATE: **2/02/21**

SHEET TITLE:
LEVEL 4 FLOOR PLAN

SHEET NO.
M204

COPYRIGHT 2021, EMERALD CITY ENGINEERS, INC.
JPARK J:\2329-001 BLOSSOM MIRANT CITIES, SEATTLE, WA\DWG\M204 LEVEL 4 FLOOR PLAN.DWG 02-03-2021 08:54

LEVEL 5 FLOOR PLAN

SCALE: 1/8" = 1'-0"

N

PLAN NOTES:

1. FOR DETAILED INFORMATION ON DUCT SIZES, HVAC EQUIPMENT LABELS, AND ACCESS PANELS LOCATED IN UNITS, REFER TO ENLARGED UNIT PLANS ON THE M3 SERIES SHEETS.
2. RESTROOM & CORRIDOR EXHAUST SHALL TERMINATE MIN. 3'-0" FROM ANY OPENINGS INTO THE BUILDING AND 10'-0" FROM INTAKES. OTHER EXHAUST SHALL TERMINATE MIN. 10'-0" FROM OPENINGS AND INTAKES
3. PLUMBING CONTRACTOR SHALL PROVIDE CONDENSATE PIPING AND EQUIPMENT FOR CONDENSATE DRAINAGE OF ALL HVAC UNITS. PIPING MATERIAL SHALL BE TYPE M COPPER. REFER TO PLUMBING DRAWINGS FOR ADDITIONAL INFORMATION.
4. DUCT PENETRATIONS IN FIRE-RATED EXTERIOR WALLS SHALL COME WITH FIRE DAMPERS OF EQUAL OR GREATER RATING.

FLAG NOTES:

1 — 2-HOUR RATED SELF CLOSING CLEANOUT ACCESS DOOR. PROVIDE ACCESS DOORS AT EACH FLOOR OF THE VERTICAL TYPE 1 DUCT RISERS FOR INSPECTION AND CLEANING.

NO.	DATE	DESCRIPTION
	1/14/21	PROGRESS SET
	2/02/21	PROGRESS SET

REVISIONS

MATTHEW D. BROOKS — STATE OF WASHINGTON — REGISTERED PROFESSIONAL ENGINEER

DRAWN: BK/JP
DESIGNED: BK/JP
CHECKED: MB
APPROVED: MB

EMERALD CITY ENGINEERS, INC
21705 Highway 99
Lynnwood, WA 98036
TEL: 425-741-1200

PROJECT:
BLOSSOM APARTMENTS

DATE: **2/02/21**

SHEET TITLE:
LEVEL 5 FLOOR PLAN

SHEET NO.
M205

COPYRIGHT 2021, EMERALD CITY ENGINEERS, INC.
JPARK J:\2329-001 BLOSSOM MIRANT CITIES, SEATTLE, WA\DWG\M205 LEVEL 5 FLOOR PLAN.DWG 02-03-2021 08:54

LEVEL 6 FLOOR PLAN

SCALE: 1/8" = 1'-0"

N

PLAN NOTES:

1. FOR DETAILED INFORMATION ON DUCT SIZES, HVAC EQUIPMENT LABELS, AND ACCESS PANELS LOCATED IN UNITS, REFER TO ENLARGED UNIT PLANS ON THE M3 SERIES SHEETS.
2. RESTROOM & CORRIDOR EXHAUST SHALL TERMINATE MIN. 3'-0" FROM ANY OPENINGS INTO THE BUILDING AND 10'-0" FROM INTAKES. OTHER EXHAUST SHALL TERMINATE MIN. 10'-0" FROM OPENINGS AND INTAKES
3. PLUMBING CONTRACTOR SHALL PROVIDE CONDENSATE PIPING AND EQUIPMENT FOR CONDENSATE DRAINAGE OF ALL HVAC UNITS. PIPING MATERIAL SHALL BE TYPE M COPPER. REFER TO PLUMBING DRAWINGS FOR ADDITIONAL INFORMATION.
4. DUCT PENETRATIONS IN FIRE-RATED EXTERIOR WALLS SHALL COME WITH FIRE DAMPERS OF EQUAL OR GREATER RATING.

FLAG NOTES:

1 — 2-HOUR RATED SELF CLOSING CLEANOUT ACCESS DOOR. PROVIDE ACCESS DOORS AT EACH FLOOR OF THE VERTICAL TYPE 1 DUCT RISERS FOR INSPECTION AND CLEANING.

NO.	DATE	DESCRIPTION
	1/14/21	PROGRESS SET
	2/02/21	PROGRESS SET

REVISIONS

MATTHEW D. BROOKS — STATE OF WASHINGTON — REGISTERED PROFESSIONAL ENGINEER

DRAWN: BK/JP
DESIGNED: BK/JP
CHECKED: MB
APPROVED: MB

EMERALD CITY ENGINEERS, INC
21705 Highway 99
Lynnwood, WA 98036
TEL: 425-741-1200

PROJECT:
BLOSSOM APARTMENTS

DATE: **2/02/21**

SHEET TITLE:
LEVEL 6 FLOOR PLAN

SHEET NO.
M206

COPYRIGHT 2021, EMERALD CITY ENGINEERS, INC.
JPARK J:\2329-001 BLOSSOM MIRANT CITIES, SEATTLE, WA\DWG\M206 LEVEL 6 FLOOR PLAN.DWG 02-03-2021 08:53

LEVEL 7 FLOOR PLAN

SCALE: 1/8" = 1'-0"

N

PLAN NOTES:

1. FOR DETAILED INFORMATION ON DUCT SIZES, HVAC EQUIPMENT LABELS, AND ACCESS PANELS LOCATED IN UNITS, REFER TO ENLARGED UNIT PLANS ON THE M3 SERIES SHEETS.
2. RESTROOM & CORRIDOR EXHAUST SHALL TERMINATE MIN. 3'-0" FROM ANY OPENINGS INTO THE BUILDING AND 10'-0" FROM INTAKES. OTHER EXHAUST SHALL TERMINATE MIN. 10'-0" FROM OPENINGS AND INTAKES
3. PLUMBING CONTRACTOR SHALL PROVIDE CONDENSATE PIPING AND EQUIPMENT FOR CONDENSATE DRAINAGE OF ALL HVAC UNITS. PIPING MATERIAL SHALL BE TYPE M COPPER. REFER TO PLUMBING DRAWINGS FOR ADDITIONAL INFORMATION.
4. DUCT PENETRATIONS IN FIRE-RATED EXTERIOR WALLS SHALL COME WITH FIRE DAMPERS OF EQUAL OR GREATER RATING.

FLAG NOTES:

1. 2-HOUR RATED SELF CLOSING CLEANOUT ACCESS DOOR. PROVIDE ACCESS DOORS AT EACH FLOOR OF THE VERTICAL TYPE 1 DUCT RISERS FOR INSPECTION AND CLEANING.

NO.	DATE	DESCRIPTION
	1/14/21	PROGRESS SET
	2/02/21	PROGRESS SET

REVISIONS

MATTHEW D. BROOKS
STATE OF WASHINGTON
REGISTERED PROFESSIONAL ENGINEER

DRAWN: BK/JP
DESIGNED: BK/JP
CHECKED: MB
APPROVED: MB

EMERALD CITY ENGINEERS, INC
21705 Highway 99
Lynnwood, WA 98036
TEL: 425-741-1200

PROJECT:
BLOSSOM APARTMENTS

DATE: 2/02/21

SHEET TITLE:
LEVEL 7 FLOOR PLAN

SHEET NO.
M207

COPYRIGHT 2021, EMERALD CITY ENGINEERS, INC.
JPARK J:\2329-001 BLOSSOM VIBRANT CITIES, SEATTLE, WA\DWG\M207 LEVEL 7 FLOOR PLAN.DWG 02-03-2021 08:53

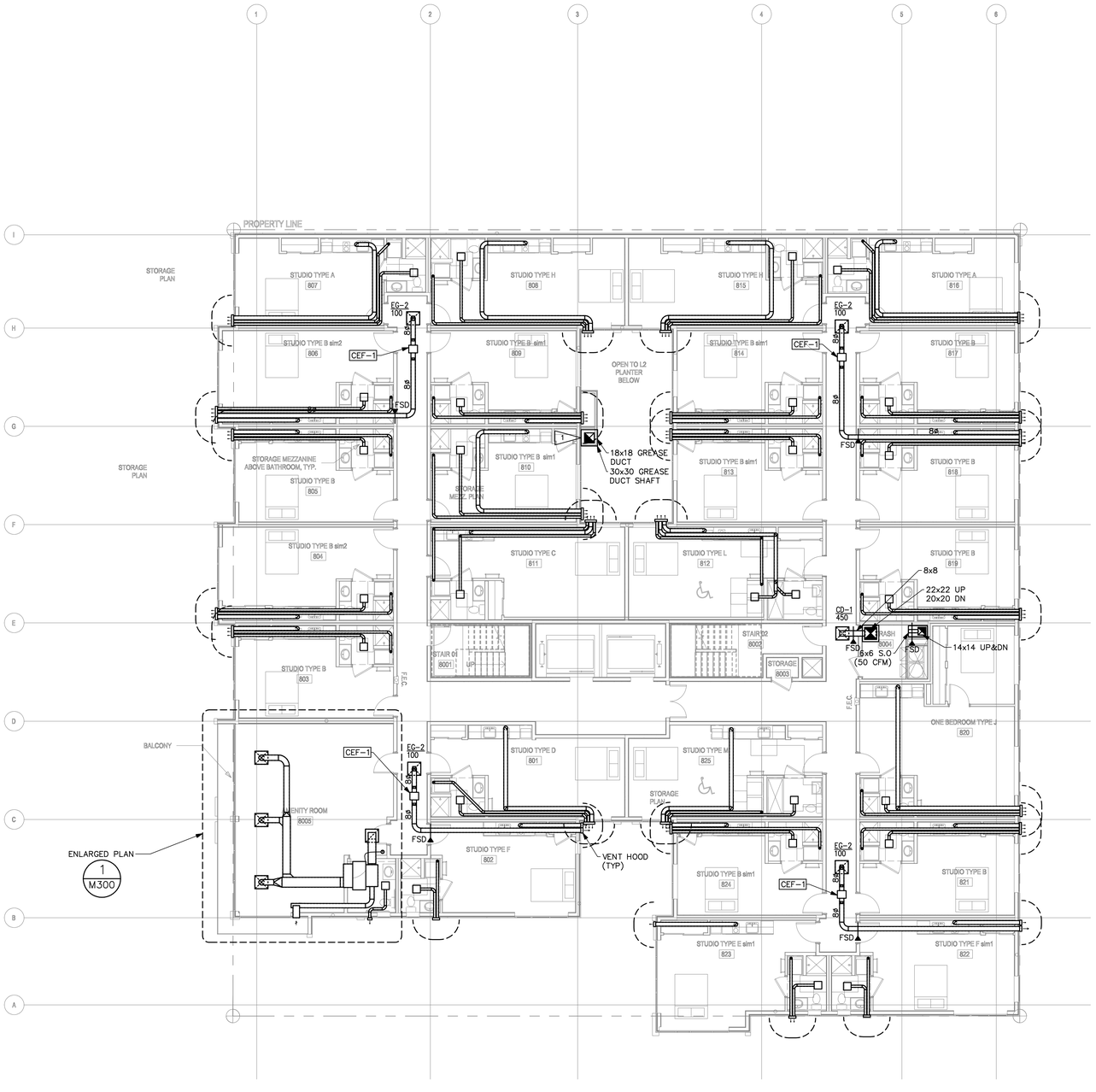

LEVEL 8 FLOOR PLAN

SCALE: 1/8" = 1'-0"

N

PLAN NOTES:

1. FOR DETAILED INFORMATION ON DUCT SIZES, HVAC EQUIPMENT LABELS, AND ACCESS PANELS LOCATED IN UNITS, REFER TO ENLARGED UNIT PLANS ON THE M3 SERIES SHEETS.
2. RESTROOM & CORRIDOR EXHAUST SHALL TERMINATE MIN. 3'-0" FROM ANY OPENINGS INTO THE BUILDING AND 10'-0" FROM INTAKES. OTHER EXHAUST SHALL TERMINATE MIN. 10'-0" FROM OPENINGS AND INTAKES
3. PLUMBING CONTRACTOR SHALL PROVIDE CONDENSATE PIPING AND EQUIPMENT FOR CONDENSATE DRAINAGE OF ALL HVAC UNITS. PIPING MATERIAL SHALL BE TYPE M COPPER. REFER TO PLUMBING DRAWINGS FOR ADDITIONAL INFORMATION.
4. DUCT PENETRATIONS IN FIRE-RATED EXTERIOR WALLS SHALL COME WITH FIRE DAMPERS OF EQUAL OR GREATER RATING.

FLAG NOTES:

1 — 2-HOUR RATED SELF CLOSING CLEANOUT ACCESS DOOR. PROVIDE ACCESS DOORS AT EACH FLOOR OF THE VERTICAL TYPE 1 DUCT RISERS FOR INSPECTION AND CLEANING.

NO.	DATE	DESCRIPTION
	1/14/21	PROGRESS SET
	2/02/21	PROGRESS SET

REVISIONS

MATTHEW D. BROOKS — STATE OF WASHINGTON — REGISTERED PROFESSIONAL ENGINEER

DRAWN: BK/JP
DESIGNED: BK/JP
CHECKED: MB
APPROVED: MB

EMERALD CITY ENGINEERS, INC
21705 Highway 99
Lynnwood, WA 98036
TEL: 425-741-1200

PROJECT:
BLOSSOM APARTMENTS

DATE: **2/02/21**

SHEET TITLE:
LEVEL 8 FLOOR PLAN

SHEET NO.
M208

COPYRIGHT 2021, EMERALD CITY ENGINEERS, INC.
JPARK J:\2329-001 BLOSSOM MIRANT CITIES, SEATTLE, WA\DWG\M208 LEVEL 8 FLOOR PLAN.DWG 02-03-2021 08:53

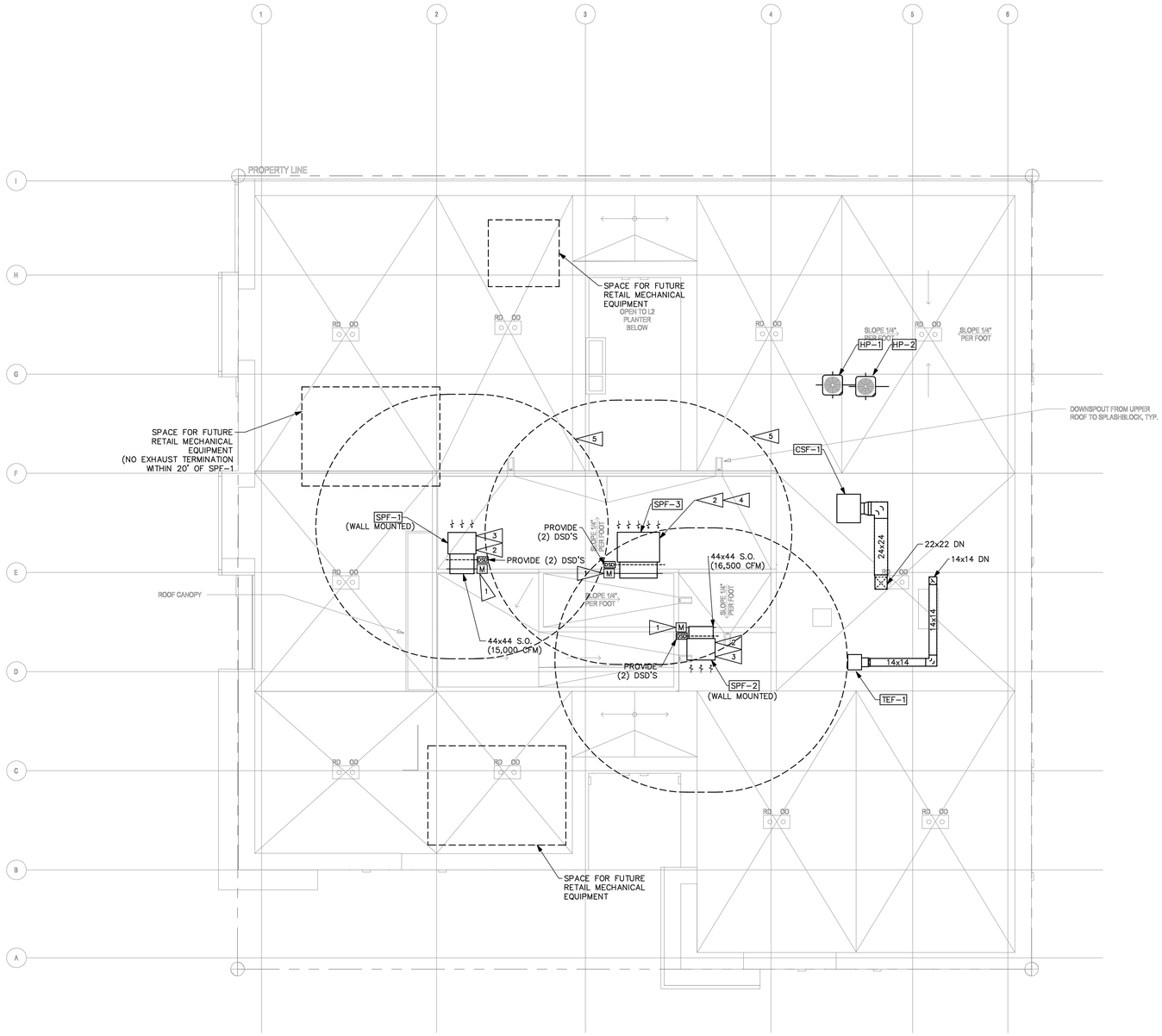

ROOF PLAN

SCALE: 1/8" = 1'-0"

N

PLAN NOTES:

1. FOR DETAILED INFORMATION ON DUCT SIZES, HVAC EQUIPMENT LABELS, AND ACCESS PANELS LOCATED IN UNITS, REFER TO ENLARGED UNIT PLANS ON THE M3 SERIES SHEETS.
2. RESTROOM & CORRIDOR EXHAUST SHALL TERMINATE MIN. 3'-0" FROM ANY OPENINGS INTO THE BUILDING AND 10'-0" FROM INTAKES. OTHER EXHAUST SHALL TERMINATE MIN. 10'-0" FROM OPENINGS AND INTAKES
3. PLUMBING CONTRACTOR SHALL PROVIDE CONDENSATE PIPING AND EQUIPMENT FOR CONDENSATE DRAINAGE OF ALL HVAC UNITS. PIPING MATERIAL SHALL BE TYPE M COPPER. REFER TO PLUMBING DRAWINGS FOR ADDITIONAL INFORMATION.
4. DUCT PENETRATIONS IN FIRE-RATED EXTERIOR WALLS SHALL COME WITH FIRE DAMPERS OF EQUAL OR GREATER RATING.

ROOF NOTES:

DSD = DUCT SMOKE DETECTOR

M = MOTORIZED DAMPER

FLAG NOTES:

1. PROVIDE DAMPER AND FAIL OPEN ACTUATOR. CONNECT TO FIRE ALARM FOR OPENING UP ACTIVATION OF ALARM OR LOSS OF POWER
2. PROVIDE SCREENED WEATHER HOOD AT INLET
3. STAIR PRESSURIZATION FAN SHALL BE CONNECTED TO EMERGENCY POWER SUPPLY (SEPARATE SERVICE)
4. ELEVATOR PRESSURIZATION FAN SHALL BE CONNECTED TO EMERGENCY POWER SUPPLY (SEPARATE SERVICE)
5. PROVIDE 20' CLEARANCE FROM EXHAUST

NO.	DATE	DESCRIPTION
	1/14/21	PROGRESS SET
	2/02/21	PROGRESS SET

REVISIONS

MASS MAGHAN KONE STATE OF WASHINGTON REGISTERED PROFESSIONAL ENGINEER

DRAWN: BK/JP
DESIGNED: BK/JP
CHECKED: MB
APPROVED: MB

EMERALD CITY ENGINEERS, INC
21705 Highway 99
Lynnwood, WA 98036
TEL: 425-741-1200

PROJECT:
BLOSSOM APARTMENTS

DATE: **2/02/21**

SHEET TITLE:
ROOF PLAN

SHEET NO.
M209

COPYRIGHT 2021, EMERALD CITY ENGINEERS, INC.
MKONE J:\2320-001 BLOSSOM MIRANT CITIES, SEATTLE, WA\DWG\M209 ROOF PLAN.DWG 07-15-2021 08:38