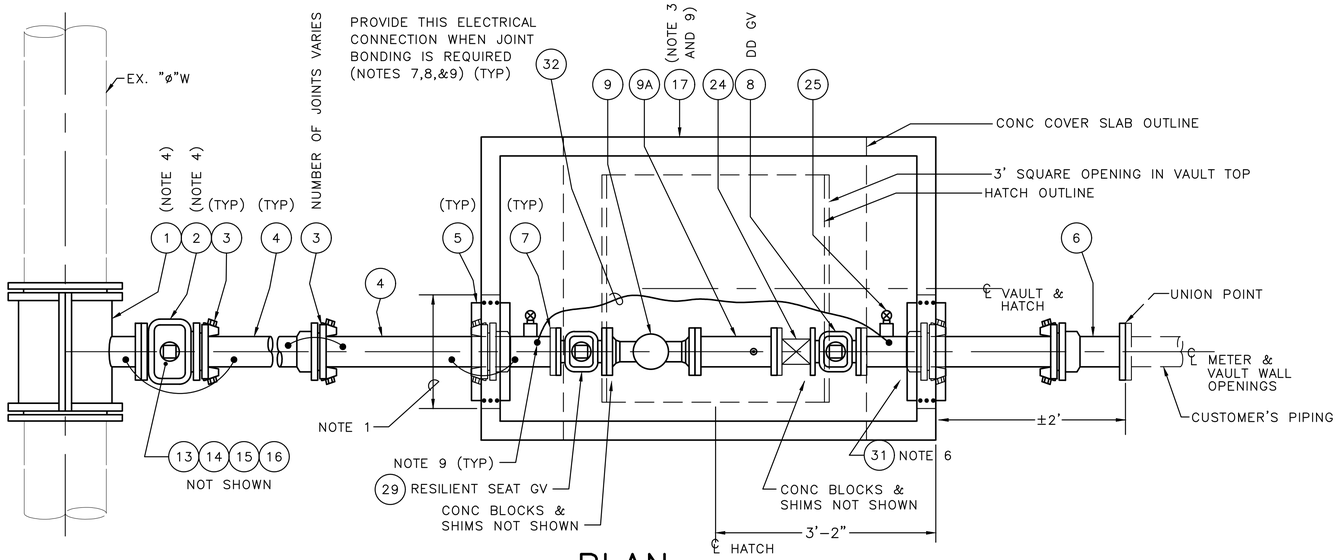

PLAN

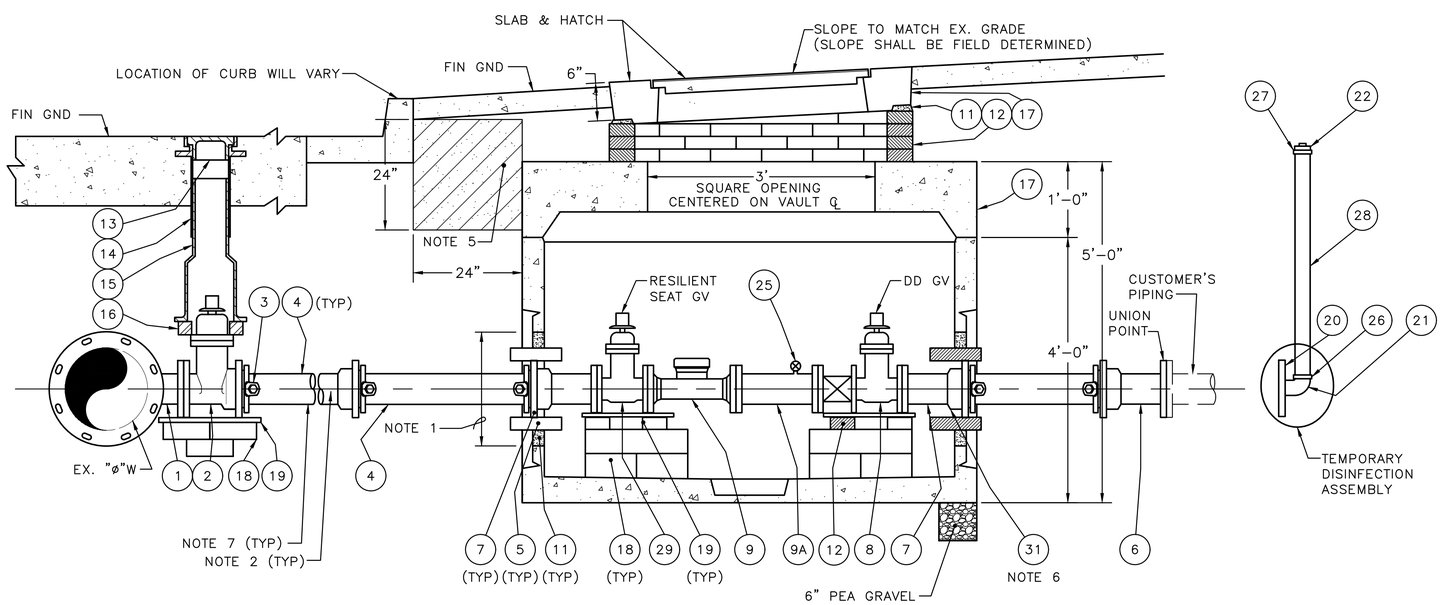

ELEVATION

4" DOMESTIC SERVICE MATERIAL LIST

ITEM	QTY	UNIT	SIZE	STOCK #	DESCRIPTION
1	1	EA	ø" X 4"		EPOXY TAPPING SLEEVE (NOTE 8)
2	1	EA	4"	840-531-040	TAPPING GATE VALVE, TAP FLG X MJ (NOTE 8)
3	4+A.N.	EA	4"	814-102-041	WEDGE RESTRAINER GLAND (MEGALUG FOLLOWER)
4	A.N.		4"	826-005-041	DUCTILE IRON PIPE, MJ, CL 53, CEM. LINED
5	9	SF	2" THICK	825-125-020	ETHAFOAM MATERIAL
6	1	EA	4"	801-050-040	ADAPTER, MJ X FLG
7	2	EA	4" X 4" X 2"	836-211-040	TEE, DI, MJ X FLG X FIPT
8	1	EA	4"	840-503-040	GATE VALVE, CL 125 FLG
9	1	EA	4"	879-007-140	ZENNER ZSU-04 ULTRASONIC METER
9A		EA	4"X13 ⅛"	811-005-043	SPOOL WITH TEST PORT
10	2	EA	4"X3"	813-513-104	REDUCER, FLG, SPACE SAVER
	8	EA	5/8"X2 3/4"	420-215-188	BOLT
	8	EA	5/8"	420-410-016	HEX NUT
	2	EA	3"X7 1/2"	813-009-001	3" RUBBER GASKET (RED)
11	1	SACK	60 LBS	210-300-020	MORTAR MIX
	1+	EA	10LB PAIL	450-145-050	JET PLUG COMPOUND
12	10	EA	2" X 4" X 8"	210-200-001	BRICK
13	1	EA	#2	822-000-000	STD VALVE BOX LID
14	1	EA	#2	822-001-000	STD VALVE BOX TOP
15	1	EA	#2	822-001-001	STD VALVE BOX BOTTOM
16	1	EA	STD	825-140-000	ETHAFOAM RING
17	1	EA	6'-6" X 4'-2" INSIDE	210-410-340	CONCRETE VAULT 575
18	10	EA	4" X 8" X 16"	210-100-002	CONCRETE BLOCK
19	6	EA	1/4"X12"X12"	827-100-120	STEEL PLATE
	4	EA	3/4"X1-1/4"X6"	400-540-122	STEEL WEDGE
	4	EA	5"X1"X1/2"	400-540-125	STEEL RAISING WEDGE
20	1	EA	4" X 2"	813-500-090	REDUCING FLANGE, DI, CL 125 FLG X FIPT
21	1	EA	2"	810-269-200	90° STREET ELBOW, GALV
22	1	EA	2"	828-500-020	PIPE PLUG, MIPT, GALV STL, SQUARE HEAD
23	6	EA	4"X9"	813-099-005	4" RUBBER GASKET (RED)
24	1	EA	4"	840-272-040	WAFER CHECK VALVE
	8	EA	5/8"X8"	420-235-039	STUD BOLT
	56	EA	5/8"	420-410-016	HEX NUT
	16	EA	5/8"X2-3/4"	420-215-188	BOLT
	24	EA	5/8"X3-1/4"	420-215-192	BOLT
25	3	EA	2"	840-050-020	BALL VALVE, BRASS 1/4 TURN
	2	EA	2"	828-150-020	IPT BRASS PLUG, 2"
	3	EA	2"	824-120-001	CLOSED NIPPLE, BRASS
26	1	EA		812-103-020	2" ADAPTER MIPTxCTS BRASS COMPRESSION FITTING
27	1	EA		812-102-020	2" ADAPTER FIPTxCTS BRASS COMPRESSION FITTING
28	5	LF	2"	826-003-020	2" COPPER PIPE, SOFT K
29	1	EA	4"	840-503-040	GATE VALVE, 4" RESILIENT SEAT, CL 125 FL X CL 125 FL
30	2	EA	4"		BEND, MJ, DI, 4IN 90DEG, W/OUT FOLLOWER, BOLT, GASKET
CORROSION PROTECTION MATERIAL LIST					
31	1	EA	4"	813-050-040	INSULATING FLANGE KIT (NOTE 6)
32	9	LF	#6AWG	472-642-006	HMW/PE STRANDED JOINT BOND CABLE
	5	EA	#2AWG	075-200-180	CADWELD WIRE 18" LONG
	2	EA	#2AWG	075-200-240	CADWELD WIRE 24" LONG
	22	EA	#CA15	075-200-008	CADWELD SHOT
	22	EA	CAPSULE	075-200-006	ROYSTON HANDI-CAP II
	1	EA	16 OZ	075-200-007	ROYSTON 747 ROY BOND PRIMER
	4	ROLL	4" X 9"	450-050-040	WAX TAPE (SEE NOTES 3 & 11)
	2	ROLL	6" X 9"	450-050-060	WAX TAPE (SEE NOTES 3 & 11)
	1	EA	GAL	450-100-000	WAX TAPE PRIMER (SEE NOTE 3 & 11)

VAULT SERIAL #	MARK	DATE	NATURE REVISIONS	MADE	CHK'D	REV'D

APPROVED FOR ADVERTISING
FAS PURCHASING AND CONTRACTING DIRECTOR
SEATTLE, WASHINGTON

BY: . . . . . .
FAS PURCHASING AND CONTRACTING DIRECTOR

INITIALS AND DATE	INITIALS AND DATE
DESIGNED CHECKED	REVIEWED: DES. CONST. SDOT PROJ. MGR.
DRAWN CHECKED	RECEIVED REVISED AS BUILT

ALL WORK SHALL BE DONE IN ACCORDANCE WITH THE CITY OF SEATTLE STANDARD PLANS AND SPECIFICATIONS AND OTHER DOCUMENTS CALLED FOR IN SECTION 0-02.3 OF THE PROJECT MANUAL.

4" DOMESTIC SERVICE INSTALLATION AND MATERIALS LIST

Seattle Public Utilities

ORDINANCE NO. PW NO.

SCALE: NTS NOTED

SEATTLE PUBLIC UTILITIES DESIGN STANDARDS AND GUIDELINES

JOB PC CO

VPI #

SHEET 1 OF 1

ALTERNATE INSTALLATION – ROTATED VAULT

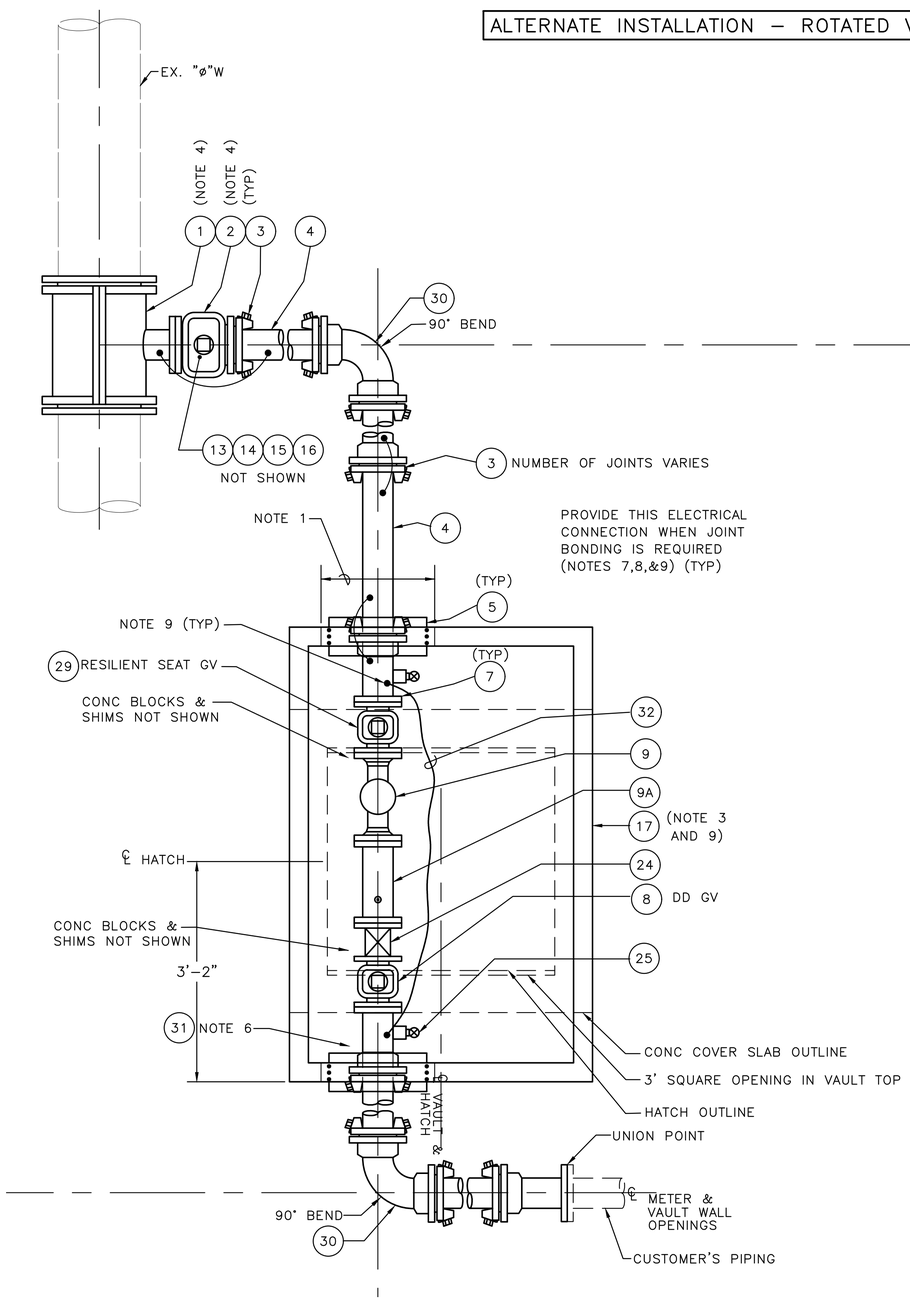

NOTES:

1. CONSTRUCT VAULT WITH 18" SQUARE KNOCKOUTS, LOCATED WHERE SHOWN.
2. APPLY TRENTON WAX TAPE #1 OR TWO COATS OF MASTIC PAINT TO SHACKLE ROD ENDS, BOLTS, NUTS, WASHERS, AND OTHER BARE METAL.
3. VAULT TYPE 644 MAY BE USED IF SITE CONSTRAINTS EXIST. INSIDE DIMENSIONS 5'-6"x3'-6" TOTAL DEPTH 4'.
4. IF CONNECTION IS TO BE MADE WITH FLANGED OUTLET TEE, REPLACE TAPPING VALVE WITH FLANGE X MJ GATE VALVE, STOCK #840-506-040.
5. MAINTAIN 24" VERTICAL CLEARANCE BETWEEN VAULT LID AND BOTTOM OF SIDEWALK OR MAINTAIN 24" HORIZONTAL X 24" VERTICAL CLEAR AREA BETWEEN BACK OF CURB AND FRONT FACE OF VAULT IF NOT ATTAINABLE, CONTACT SPU WATER ENGINEERING.

CORROSION PROTECTION NOTES:

6. FLANGE INSULATING KIT SHALL BE INSTALLED WHERE THE SUPPLY MAIN IS CATHODICALLY PROTECTED.
7. WHEN SERVICE IS SUPPLIED FROM A TAPE-COATED OR OTHER CORROSION PROTECTED SUPPLY MAIN, THE SERVICE PIPING SHALL BE PROVIDED WITH A MATCHING COATING SYSTEM, AND THE JOINTS SHALL BE BONDED AND WAX TAPE COATED.
8. DETAILS AND MATERIALS FOR CORROSION PROTECTION MEASURES SHALL CONFORM TO THE RELATED CORROSION PROTECTION STANDARD PLANS. THE MATERIALS LIST DOES NOT INCLUDE ALL THE MATERIAL REQUIRED FOR THE STANDARD PLANS.
9. CAD WELDS WILL REQUIRE AN ERICO #6AWG WELDER FOR 4" DIP.

VAULT SERIAL #	DATE	MARK	NATURE REVISIONS	MADE	CHK'D	REV'D

DSG
17-11B

4" DOMESTIC SERVICE
INSTALLATION NOTES

APPROVED FOR ADVERTISING FAS PURCHASING AND CONTRACTING DIRECTOR SEATTLE, WASHINGTON BY: . . . . . . FAS PURCHASING AND CONTRACTING DIRECTOR	INITIALS AND DATE DESIGNED CHECKED DRAWN CHECKED	INITIALS AND DATE REVIEWED: DES. CONST. SDOT PROJ. MGR. RECEIVED REVISED AS BUILT ALL WORK SHALL BE DONE IN ACCORDANCE WITH THE CITY OF SEATTLE STANDARD PLANS AND SPECIFICATIONS AND OTHER DOCUMENTS CALLED FOR IN SECTION 0-02.3 OF THE PROJECT MANUAL.	Seattle Public Utilities ORDINANCE NO. PW NO. SCALE: AS NOTED	SEATTLE PUBLIC UTILITIES DESIGN STANDARDS AND GUIDELINES	DRV PC CO VPI # SHEET OF

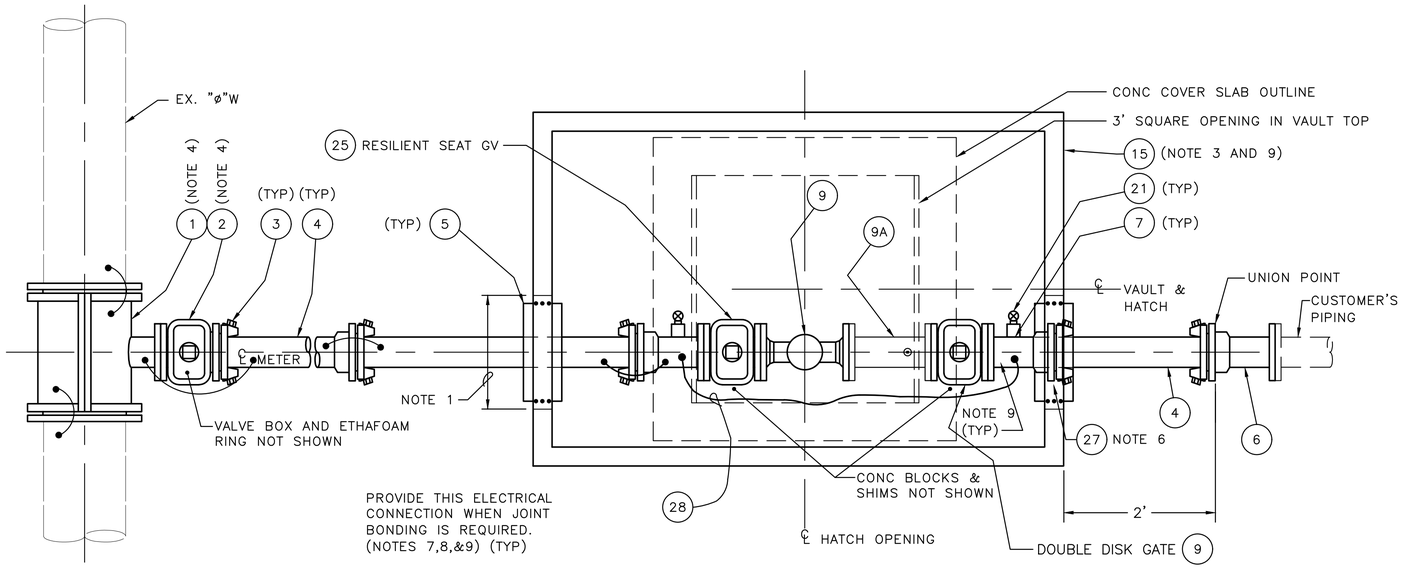

PLAN

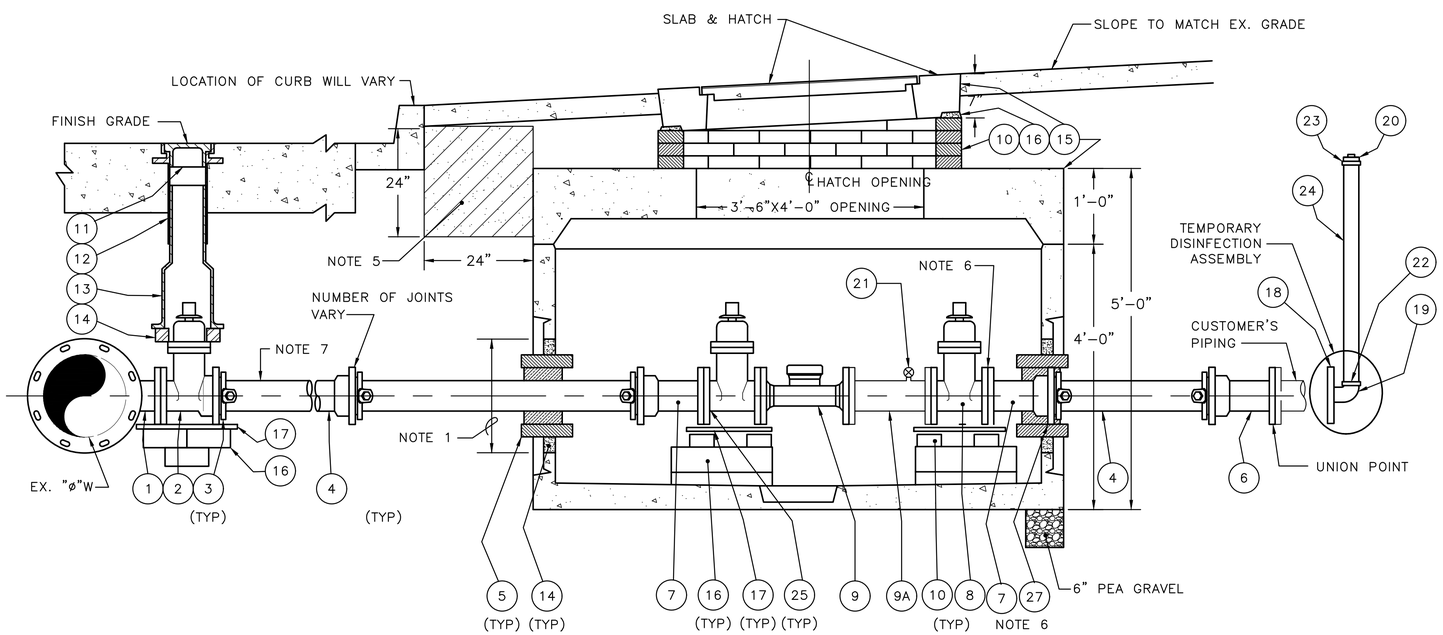

ELEVATION

4"COMBINATION FIRE/DOMESTIC SERVICE MATERIAL LIST

ITEM	QUAN	UNIT	STOCK NUMBER	SIZE	DESCRIPTION
1	1	EA		ø" X 4"	EPOXY TAPPING SLEEVE (NOTE 6)
2	1	EA	840-531-040	4"	TAPPING GATE VALVE, TAP FLG X MJ (NOTE 6)
3	4+	EA	814-102-041	4"	WEDGE RESTRAINER GLAND (MEGALUG FOLLOWER)
4	A.N.		826-005-041	4"	DUCTILE IRON PIPE, MJ, CL 52, CEM. LINED
5	9	SF	825-125-020	2" THICK	ETHAFOAM MATERIAL
6	1	EA	801-050-040	4"	ADAPTER, MJ X FLG
7	2	EA	836-211-040	4" X 4" X 2"	TEE, BP, MJ X FLG X FIPT
8	2	EA	840-503-040	4"	GATE VALVE, CL 125 FLG
9	1	EA	879-007-140	4"	ZENNER ULTRASONIC METERS
9A	1	EA	811-005-043	4" X 13 ⅛"	SPOOL WITH TEST PORT
	1	SACK	210-300-020	60 LBS	MORTAR MIX
	1+	EA	450-145-050	10LB PAIL #1408	JET PLUG COMPUND
10	10	EA	210-200-001	STD	BRICK
11	1	EA	822-000-000	#2	STD VALVE BOX LID
12	1	EA	822-001-000	#2	STD VALVE BOX TOP
13	1	EA	822-001-001	#2	STD VALVE BOX BOTTOM
14	1	EA	825-140-000	STD	ETHAFOAM RING
15	1	EA	210-410-340	6'-6" X 4'-2" INSIDE	CONCRETE VAULT 575
16	6	EA	210-100-002	4" X 8" 16"	CONCRETE BLOCK
17	6	EA	827-100-120	1/4" X 12" X 12"	STEEL PLATE
	4	EA	400-540-122	3/4" X 1-1/4" X 6"	STEEL WEDGE
	4	EA	400-540-125	5" X 1" X 1/2"	STEEL RAISING WEDGE
18	1	EA	813-500-090	4" X 2"	REDUCING FLANGE, DI, CL 125 FLG X FIPT
19	1	EA	810-269-200	2"	90° STREET ELBOW, GALV
20	1	EA	828-500-020	2"	PIPE PLUG, MIPT, GALV STL, SQUARE HEAD
	6	EA	813-099-005	4" X 9"	4" RUBBER GASKET (RED)
	8	EA	420-235-026	5/8" X 3"	STUD BOLT
	48	EA	420-410-016	5/8"	HEX NUT
	40	EA	420-215-192	5/8" X 3 ¼"	BOLT
21	3		840-050-020	2"	BALL VALVES, BRASS 1/4 TURN
	3		824-120-001	2"	CLOSED NIPPLES
	3		828-150-020	2"	PLUG, PIPE BRASS IPT
22	1	EA	812-103-020		2" MIPT X CTS BRASS COMPRESSION FITTING
23	1	EA	812-102-020		2" FIPT X CTS BRASS COMPRESSION FITTING
24	5	LF	826-003-020		2" COPPER PIPE, SOFT K
25	1	EA	840-503-040	4"	GATE VALVE, 4" RESILIENT SEAT, CL 125 FL X CL 125 FL
26	2	EA			BEND, MJ, DI, 4IN 90DEG, W/OUT FOLLOWER, BOLT, GASKET
CORROSION PROTECTION MATERIAL LIST					
27	1	EA	813-050-040	4"	INSULATING FLANGE KIT (NOTE 6)
28	10	LF	472-642-006	#6AWG	HMW/PE STRANDED JOINT BOND CABLE
	5	EA	075-200-180	#2AWG	CADWELD WIRE 18" LONG
	2	EA	075-200-240	#2AWG	CADWELD WIRE 24" LONG
	22	EA	075-200-008	#CA15	CADWELD SHOT
	22	EA	075-200-006	CAPSULE	ROYSTON HANDI-CAP II
	1	EA	075-200-007	16 OZ	ROYSTON 747 ROY BOND PRIMER
	4	ROLL	450-050-040	4" X 9"	WAX TAPE (SEE NOTES 2 & 8)
	2	ROLL	450-050-060	6" X 9"	WAX TAPE (SEE NOTES 2 & 8)
	1	EA	450-100-000	GAL	WAX TAPE PRIMER (SEE NOTES 2 & 8)

A.N. = AS NEEDED

VAULT SERIAL #	DATE	MARK	NATURE REVISIONS	MADE	CHK'D	REV'D

4" COMBO FIRE/DOMESTIC SERVICE INSTALLATION AND MATERIALS LIST

APPROVED FOR ADVERTISING
FAS PURCHASING AND CONTRACTING DIRECTOR
SEATTLE, WASHINGTON

BY: . . . . . .
FAS PURCHASING AND CONTRACTING DIRECTOR

INITIALS AND DATE	INITIALS AND DATE
DESIGNED CHECKED	REVIEWED: DES. CONST. SDOT PROJ. MGR.
DRAWN CHECKED	RECEIVED REVISED AS BUILT

ALL WORK SHALL BE DONE IN ACCORDANCE WITH THE CITY OF SEATTLE STANDARD PLANS AND SPECIFICATIONS AND OTHER DOCUMENTS CALLED FOR IN SECTION 0-02.3 OF THE PROJECT MANUAL.

Seattle Public Utilities

ORDINANCE NO. PW NO.

SCALE: NTS NOTED

SEATTLE PUBLIC UTILITIES
DESIGN STANDARDS AND GUIDELINES

JOB PC CO
VPI #
SHEET 1 OF 1

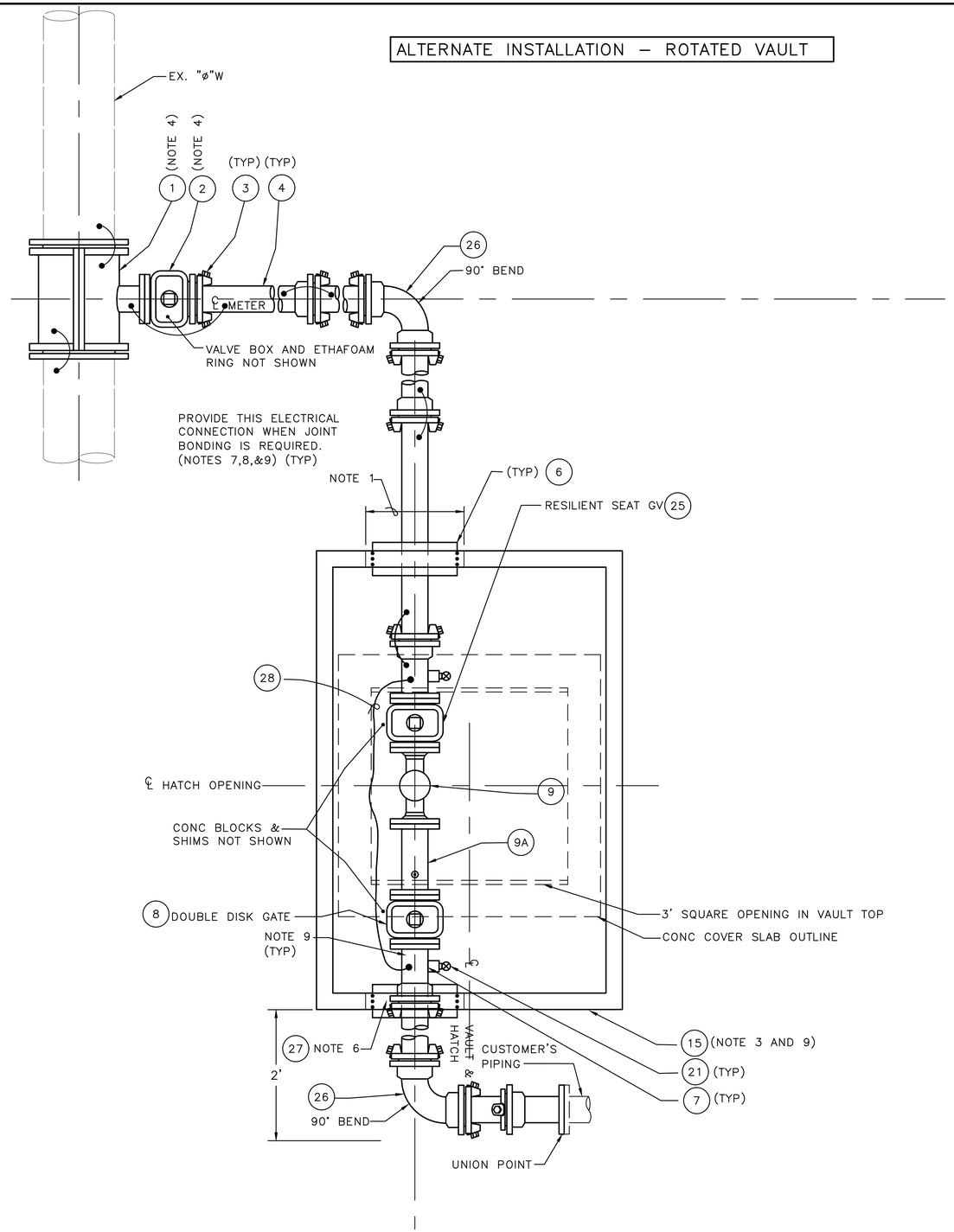

NOTES:

1. CONSTRUCT VAULT WITH 18" SQUARE KNOCKOUTS, LOCATED WHERE SHOWN.
2. APPLY TRENTON WAX TAPE #1 OR TWO COATS OF MASTIC PAINT TO SHACKLE ROD ENDS, BOLTS, NUTS, WASHERS, AND OTHER BARE METAL.
3. VAULT TYPE 644 MAY BE USED IF SITE CONSTRAINTS EXIST. INSIDE DIMENSIONS 5'–6"x3'–6" TOTAL DEPTH 4'.
4. IF CONNECTION IS TO BE MADE WITH FLANGED OUTLET TEE, REPLACE TAPPING VALVE WITH FLANGE X MJ GATE VALVE, STOCK #840–506–040.
5. MAINTAIN 24" VERTICAL CLEARANCE BETWEEN VAULT LID AND BOTTOM OF SIDEWALK OR MAINTAIN 24" HORIZONTAL X 24" VERTICAL CLEAR AREA BETWEEN BACK OF CURB AND FRONT FACE OF VAULT IF NOT ATTAINABLE, CONTACT SPU WATER ENGINEERING.

CORROSION PROTECTION NOTES:

6. FLANGE INSULATING KIT SHALL BE INSTALLED WHERE THE SUPPLY MAIN IS CATHODICALLY PROTECTED.
7. WHEN SERVICE IS SUPPLIED FROM A TAPE–COATED OR OTHER CORROSION PROTECTED SUPPLY MAIN, THE PIPING SHALL BE PROVIDED WITH A MATCHING COATING SYSTEM, AND THE JOINTS SHALL BE BONDED AND WAX TAPE COATED.
8. DETAILS AND MATERIALS FOR CORROSION PROTECTION MEASURES SHALL CONFORM TO THE RELATED CORROSION PROTECTION STANDARD PLANS. THE MATERIALS LIST ABOVE DOES NOT INCLUDE ALL THE MATERIAL REQUIRED FOR THE STANDARD PLANS.
9. CAD WELDS WILL REQUIRE AN ERICO #6AWG WELDER FOR 4" DIP.

4" COMBINATION FIRE/DOMESTIC SERVICE INSTALLATION NOTES

VAULT SERIAL #	DATE	MARK	NATURE REVISIONS	MADE	CHK'D	REV'D

DSG
17–12B

APPROVED FOR ADVERTISING
FAS PURCHASING AND CONTRACTING DIRECTOR
SEATTLE, WASHINGTON

BY: . . . . . .
FAS PURCHASING AND CONTRACTING DIRECTOR

INITIALS AND DATE	INITIALS AND DATE
DESIGNED	REVIEWED: DES. CONST. SDOT PROJ. MGR.
CHECKED	
DRAWN	RECEIVED
CHECKED	REVISED AS BUILT

ALL WORK SHALL BE DONE IN ACCORDANCE WITH THE CITY OF SEATTLE STANDARD PLANS AND SPECIFICATIONS AND OTHER DOCUMENTS CALLED FOR IN SECTION 0–02.3 OF THE PROJECT MANUAL.

Seattle Public Utilities

ORDINANCE NO. PW NO.

SCALE: AS NOTED

SEATTLE PUBLIC UTILITIES
DESIGN STANDARDS AND GUIDELINES

JOB PC
CO
VPI #
SHEET OF

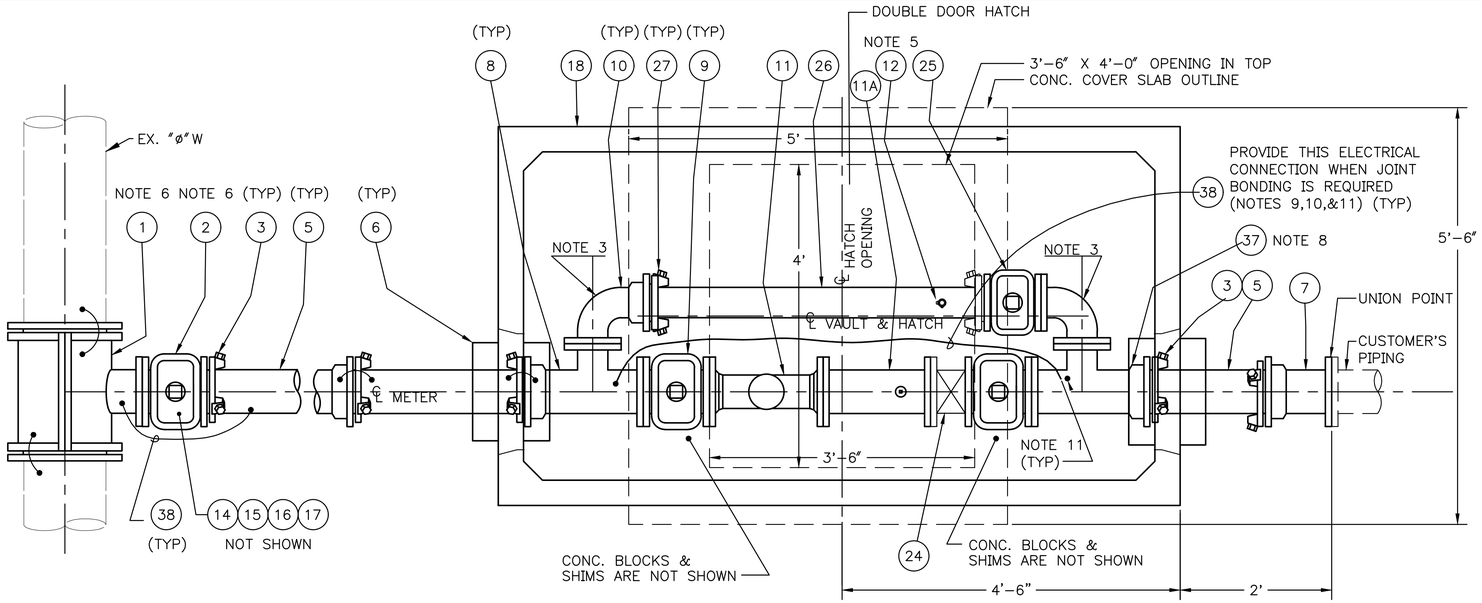

PLAN

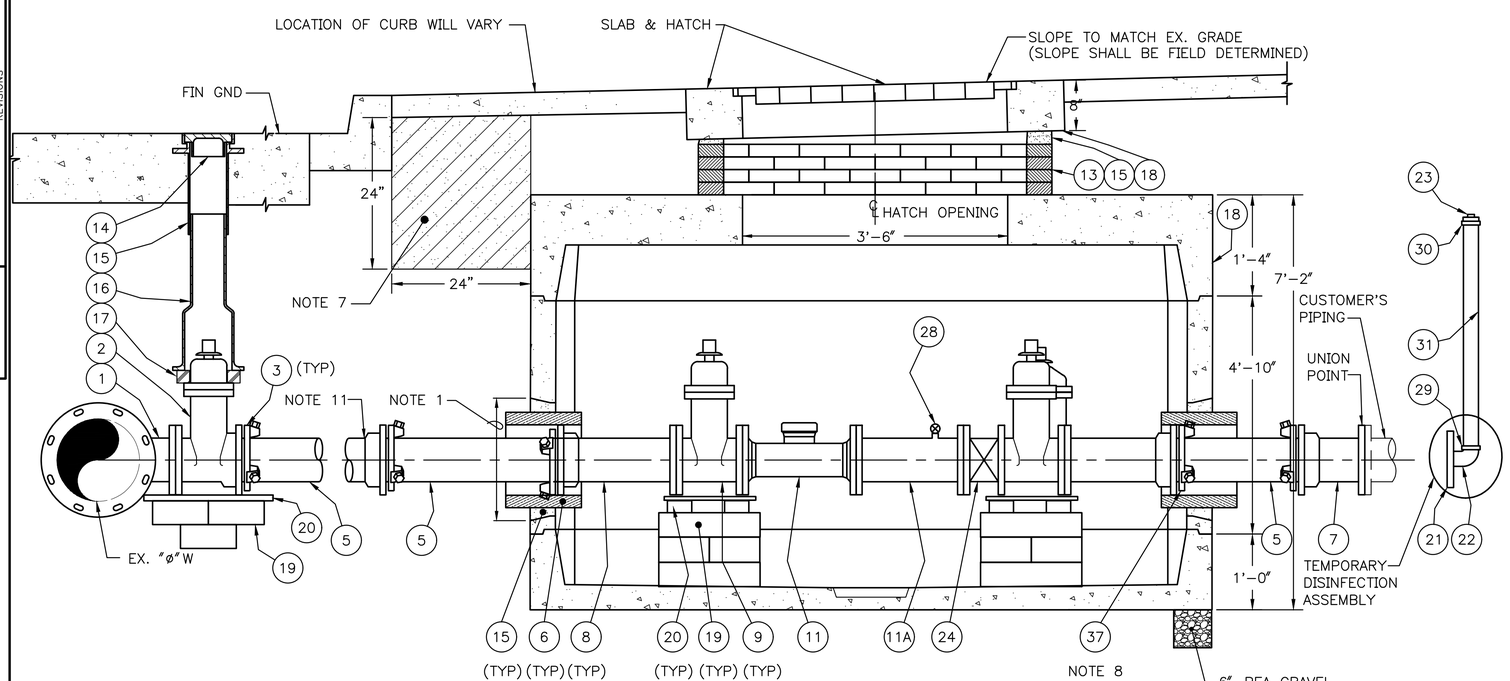

ELEVATION

6" DOMESTIC SERVICE MATERIAL LIST

ITEM	QTY	UNIT	SIZE	STOCK NUMBER	DESCRIPTION
1	1	EA	ø X 6"		EPOXY TAPPING SLEEVE (NOTE 6)
2	1	EA	6"	840-531-060	TAPPING GATE VALVE, TAP FLG X MJ (NOTE 6)
3	4+	EA	6"	814-102-061	WEDGE RESTRAINER GLAND (MEGALUG FOLLOWER)
4	3	EA	10LB PAIL #1408	450-145-050	JET PLUG COMPOUND
5	A.N.		6"	826-005-061	DUCTILE IRON PIPE, MJ, CL 53, CEM. LINED
6	9	SF	2" THICK	825-125-020	ETHAFOAM MATERIAL
7	1	EA	6"	820-116-060	HUB & FLANGE, MJ X FLG
8	2	EA	6" X 6" X 4"	836-255-060	TEE, DI, 6"MJ X 6"FLG X 4"FLG
9	2	EA	6"	840-504-060	GATE VALVE, CL 125 FLG X CL 125 FLG
10	1	EA	4"	809-069-040	BEND, 90°, DI, CL 125 FLG X MJ
11		EA	6"	879-001-060	ZENNER ZSU-06
11A		EA	6" X 18-1/2"	811-003-185	SPOOL W/ 2IN OFFSET TEST PORT
12	2	EA	3/4" X 3/4"	840-357-007	CORP STOP, AWWA COMP
	2	SACK	60 LBS	210-300-015	PREMIX CONCRETE
13	10	EA	2" X 4" X 8"	210-200-001	BRICK
14	1	EA	#2	822-000-000	STD VALVE BOX LID
15	1	EA	#2	822-001-000	STD VALVE BOX TOP
16	1	EA	#2	822-001-001	STD VALVE BOX BOTTOM
17	1	EA	STD	825-140-000	ETHAFOAM RING
18	1	EA	4'-4" X 8'-4" INSIDE	210-410-484	CONCRETE VAULT 4484
19	10	EA	4"X8"X16"	210-100-002	CONCRETE BLOCK
20	4	EA	1/4" X 12" X 12"	827-100-120	STEEL PLATE
	4	EA	3/4" X 1 - 1/4" X 6"	400-540-122	STEEL WEDGE
	4	EA	5"X1"x1/2"	400-540-125	STEEL RAISING WEDGE
21	1	EA	6" X 2"	813-527-110	REDUCING FLANGE, DI, CL 125 FLG X FIPT
22	1	EA	2"	810-269-200	90° STREET ELBOW, GALV
23	1	EA	2"	828-500-020	PIPE PLUG, MIPT, GALV STL, SQUARE HEAD
24	1	EA	6"	840-270-060	WAFER CHK VALVE
25	1	EA	4"	840-504-040	GATE VALVE, CL 125 FLG X CL 125 MJ
26	A.N.		4"	826-005-041	DUCTILE IRON PIPE, MJ, CL 53 CEM. LINED
27	2	EA	4"	814-102-041	WEDGE RESTRAINER GLAND (MEGALUG FOLLOWER)
	7	EA	6" X 11"	813-099-015	6" RUBBER GASKET (RED)
	56	EA	3/4"	420-410-020	HEX NUT
	16	EA	3/4" X 3"	420-215-228	HEX BOLT
	24	EA	3/4"X3-1/2"	420-215-232	BOLT
	8	EA	3/4"X7"	420-235-061	STUD BOLT
28	1	EA	2"	840-050-020	BALL VALVE, BRASS 1/4 TURN
	1	EA	2"	824-120-001	CLOSED NIPPLE IPT, BRASS
	1	EA	2"	828-150-020	BRASS PLUG IPT
	1	EA	4"	809-049-040	4" BEND, 90° DI, CL 125, FLGxFLG
	3	EA	4"X9"	813-099-005	4" RUBBER GASKET (RED)
	24	EA	5/8"x3 1/4"	420-215-192	BOLT
	24	EA	5/8"	420-410-016	HEX NUT
29	1	EA		812-103-020	2" MIPT X CTS BRASS COMPRESSION FITTING
30	1	EA		812-102-020	2" FIPT X CTS BRASS COMPRESSION FITTING
31	10	LF		826-003-020	2" COPPER PIPE, SOFT K
32	2	EA	6"		BEND, MJ, DI, 6IN 90DEG, W/OUT FOLLOWER, BOLT, GASKET

A.N. = AS NEEDED

6" DOMESTIC SERVICE INSTALLATION AND MATERIALS LIST

VAULT SERIAL #	DATE	MARK	NATURE REVISIONS	MADE	CHK'D	REV'D

DSG 17-13A

APPROVED FOR ADVERTISING
FAS PURCHASING AND CONTRACTING DIRECTOR
SEATTLE, WASHINGTON
BY: . . . . . .
FAS PURCHASING AND CONTRACTING DIRECTOR

INITIALS AND DATE	INITIALS AND DATE
DESIGNED	REVIEWED: DES. CONST. SDOT PROJ. MGR.
CHECKED	
DRAWN	RECEIVED
CHECKED	REVISED AS BUILT

ALL WORK SHALL BE DONE IN ACCORDANCE WITH THE CITY OF SEATTLE STANDARD PLANS AND SPECIFICATIONS AND OTHER DOCUMENTS CALLED FOR IN SECTION 0-02.3 OF THE PROJECT MANUAL.

Seattle Public Utilities

ORDINANCE NO. PW NO.

SCALE: AS NOTED

SEATTLE PUBLIC UTILITIES DESIGN STANDARDS AND GUIDELINES

JOB PC CO
VPI #
SHEET OF

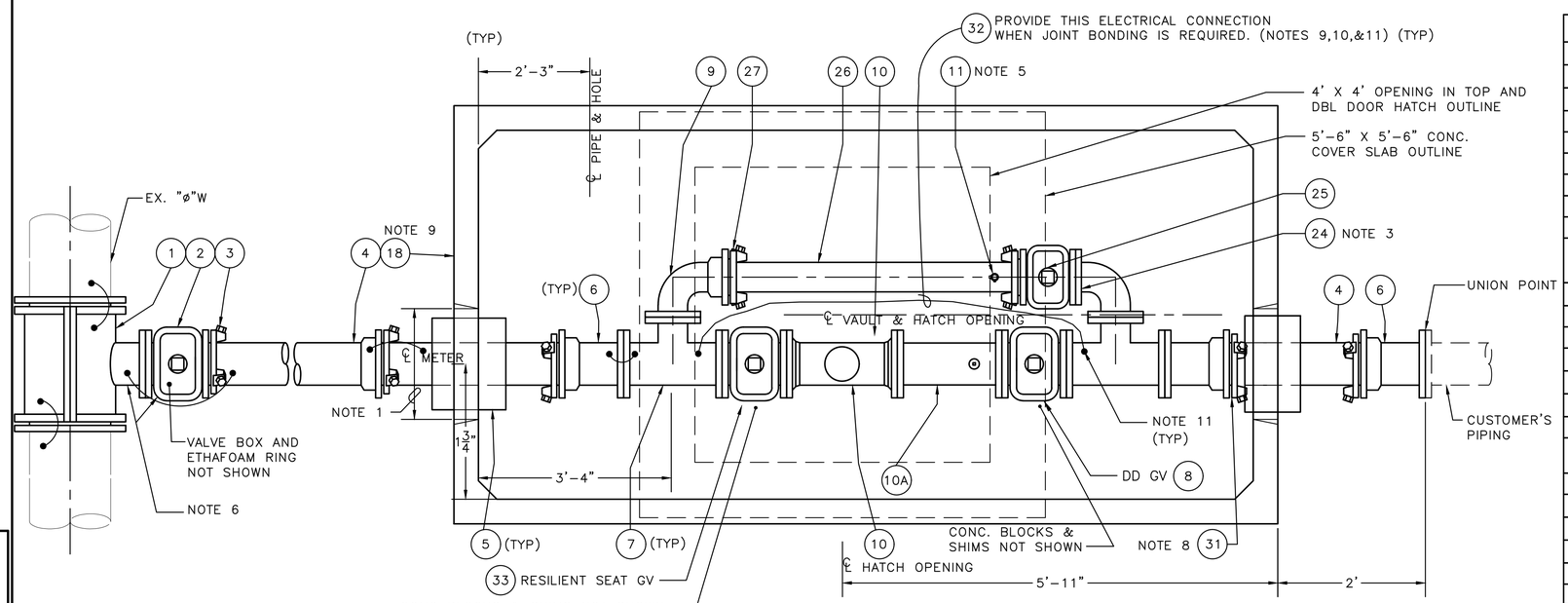

PLAN

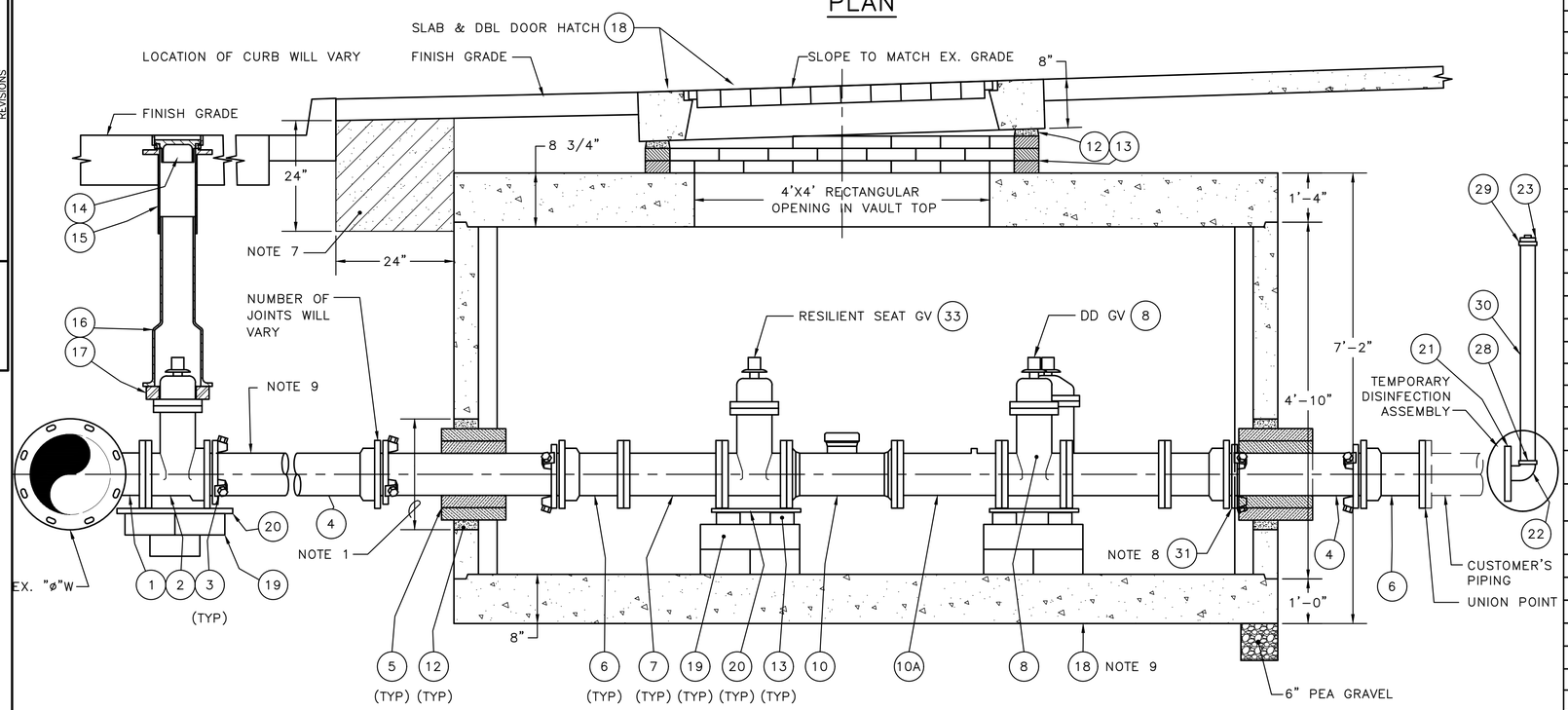

ELEVATION

6" COMBO FIRE/DOMESTIC SERVICE INSTALLATION AND MATERIALS LIST

6" COMBINATION FIRE/DOMESTIC SERVICE MATERIAL LIST

ITEM	QTY	UNIT	STOCK NO.	SIZE	DESCRIPTION
1	1	EA		ø" X 6"	EPOXY TAPPING SLEEVE (NOTE 6)
2	1	EA	840-531-060	6"	TAPPING GATE VALVE, TAP FLG X MJ (NOTE 6)
3	4+A.N.	EA	814-102-061	6"	WEDGE RESTRAINER GLAND (MEGALUG FOLLOWER)
4	A.N.	LF	826-005-061	6"	DUCTILE IRON PIPE, MJ, CL 53, CEM. LINED
5	12	SF	825-125-020	2" THICK	ETHAFOAM MATERIAL
6	3	EA	801-105-060	6"	ADAPTER, MJ X FLG
7	2	EA	836-245-060	6" X 6" X 4"	TEE, DI 6"FL X 6"FL X 4"FL
8	1	EA	840-504-060	6"	GATE VALVE, CL 125 FLG X CL 125 FLG
9	1	EA	809-069-040	4"	BEND, 90°, DI, CL 125 FLG X MJ
10	1	EA	879-007-160	6"	ZENNER ULTRASONIC METERS
10A	1	EA	811-005-061	6" X 17 ⅛"	SPOOL WITH TEST PORT
11	2	EA	840-357-007	3/4" X 2"	CORP STOP, AWWA X IPT, BALL STYLE
12	1	SACK	210-300-020	60 LBS	MORTAR MIX
13	10	EA	210-200-001	2" X 4" X 8"	BRICK
14	1	EA	822-000-000	#2	STD VALVE BOX LID
15	1	EA	822-001-000	#2	STD VALVE BOX TOP
16	1	EA	822-001-001	#2	STD VALVE BOX BOTTOM
17	1	EA	825-140-000	STD	ETHAFOAM RING
18	1	EA	210-410-506	5' X 10'-6" INSIDE	CONC. VAULT MODIFIED UTILITY VAULT 5106
19	10	EA	210-100-002	4" X 8" X 16"	CONCRETE BLOCK
20	4	EA	827-100-120	1/4"X12"X12"	STEEL PLATE
	6	EA	400-540-122	3/4"X1-1/4"X6"	STEEL WEDGE
	6	EA	400-540-125	5"X1"X1/2"	STEEL RAISING WEDGE
21	1	EA	813-527-110	6" X 2"	REDUCING FLANGE, DI, CL 125 FLG X FIPT
22	1	EA	810-269-200	2"	90° STREET ELBOW, GALV
23	1	EA	828-500-020	2"	PIPE PLUG, MIPT, GALV STL, SQUARE HEAD
24	1		809-049-040	4"	90° BEND, DI, CL 125, FLGxFLG
25	1	EA	840-503-040	4"	GATE VALVE, CL125 FLG X CL125 MJ
26	A.N.		826-005-041	4"	DUCTILE IRON PIPE, MJ CL52, CEM. LINED
27	2	EA	814-102-041	4"	WEDGE RESTRAINER GLAND (MEGALUG FOLLOWER)
	6	EA	813-099-015	6" X 11"	6" RUBBER GASKET (RED)
	56	EA	420-410-020	3/4"	HEX NUT
	16	EA	420-215-228	3/4"X3"	HEX BOLT
	24	EA	420-215-232	3/4"X3-1/2"	BOLT
	8	EA	420-235-055	3/4"X6"	STUD BOLT
	1+	EA	450-145-050	10LB PAIL #1408	JET PLUG COMPOUND
	1		840-050-020	2"	BALL VALVE, BRASS 1/4 TURN
	1		824-120-001	2"	CLOSED NIPPLE (BRASS) IPT
	1		828-150-020	2"	PLUG, PIPE (BRASS) IPT
	3		813-099-005	4"x9"	4" RUBBER GASKET (RED)
	24		420-215-192	⅝"x3¼"	BOLTS
	24		420-410-016	⅝"	HEX NUTS
28	1	EA	812-103-020		2" MIPT X CTS BRASS COMPRESSION FITTING
29	1	EA	812-102-020		2" FIPT X CTS BRASS COMPRESSION FITTING
30	5	LF	826-003-020		2" COPPER PIPE, SOFT K
33	1	EA	840-503-060	6"	GATE VALVE, 6" RESILIENT SEAT, CL 125 FL X CL 125 FL
34	2	EA	809-079-060	6"	BEND, MJ, DI, 6IN 90DEG, W/OUT FOLLOWER, BOLT, GASKET

CORROSION PROTECTION MATERIAL LIST

31	1	EA	813-050-060	6"	INSULATING FLANGE KIT (NOTE 8)
32	12	LF	472-642-006	#6AWG	HMW/PE STRANDED JOINT BOND CABLE
	5	EA	075-200-180	#2AWG	CADWELD WIRE 18" LONG
	2	EA	075-200-240	#2AWG	CADWELD WIRE 24" LONG
	22	EA	075-200-008	#CA15	CADWELD SHOT
	22	EA	075-200-006	CAPSULE	ROYSTON HANDI-CAP II
	1	EA	075-200-007	16 OZ	ROYSTON 747 ROY BOND PRIMER
	4	EA	450-050-040	4" X 9"	WAX TAPE (SEE NOTES 2 & 9)
	2	EA	450-040-060	6" X 9"	WAX TAPE (SEE NOTES 2 & 9)
	1	EA	450-100-000	GAL	WAX TAPE PRIMER (SEE NOTES 2 & 9)

VAULT SERIAL #	MARK	DATE	NATURE REVISIONS	MADE	CHK'D	REV'D

APPROVED FOR ADVERTISING
FAS PURCHASING AND CONTRACTING DIRECTOR
SEATTLE, WASHINGTON

BY: . . . . . .
FAS PURCHASING AND CONTRACTING DIRECTOR

INITIALS AND DATE	INITIALS AND DATE
DESIGNED	REVIEWED: DES. CONST. SDOT PROJ. MGR.
CHECKED	
DRAWN	RECEIVED
CHECKED	REVISED AS BUILT

ALL WORK SHALL BE DONE IN ACCORDANCE WITH THE CITY OF SEATTLE STANDARD PLANS AND SPECIFICATIONS AND OTHER DOCUMENTS CALLED FOR IN SECTION 0-02.3 OF THE PROJECT MANUAL.

Seattle Public Utilities

ORDINANCE NO. PW NO.

SCALE: NTS NOTED

SEATTLE PUBLIC UTILITIES DESIGN STANDARDS AND GUIDELINES

JOB PC CO
VPI #
SHEET 1 OF 1

ALTERNATE INSTALLATION – ROTATED VAULT

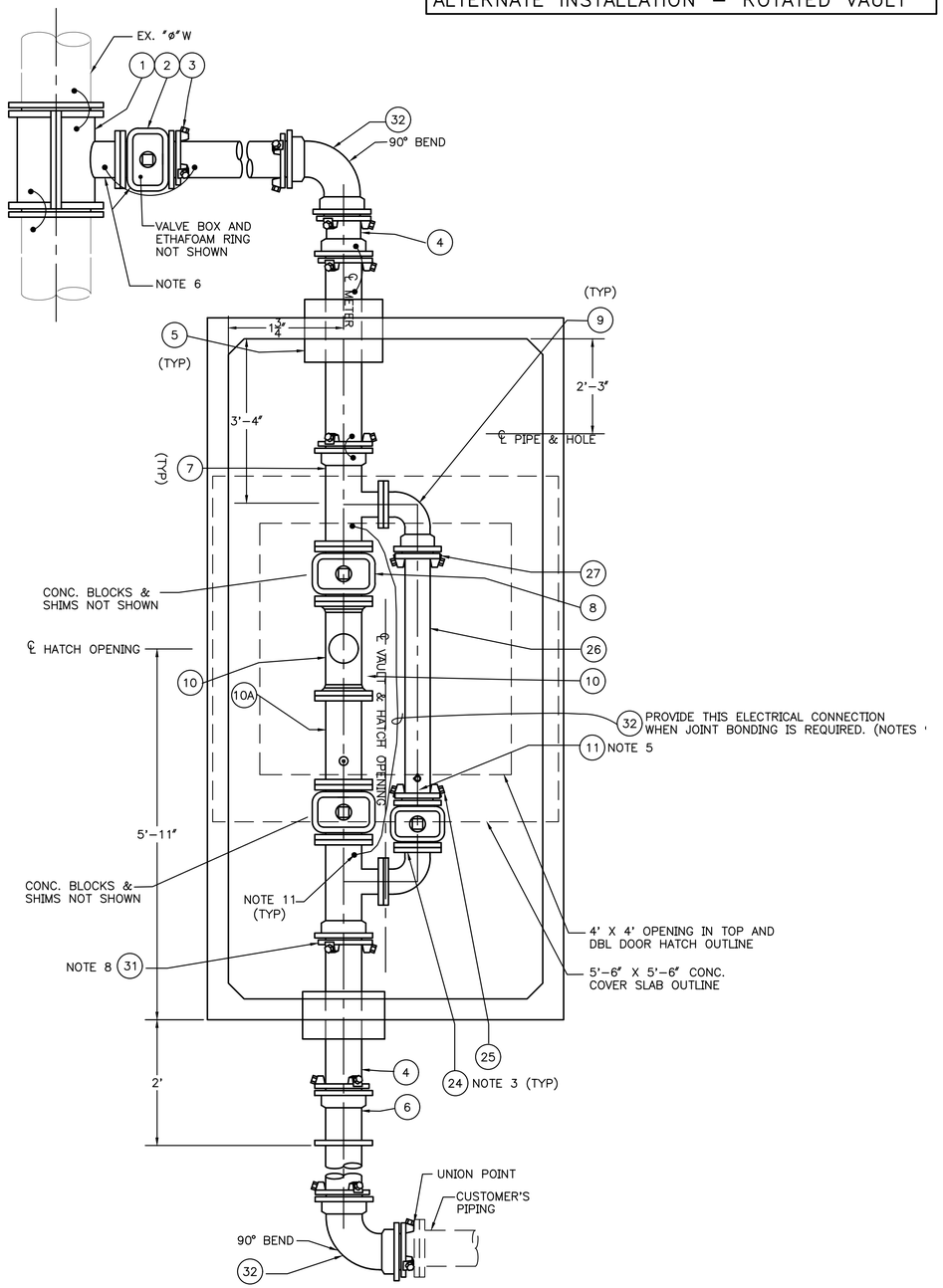

NOTES:

1. CONSTRUCT VAULT WITH 18" SQUARE KNOCKOUTS LOCATED WHERE SHOWN.
2. APPLY TRENTON WAX TAPE #1 OR TWO COATS OF MASTIC PAINT TO SHACKLE ROD ENDS, BOLTS, NUTS, WASHERS, AND OTHER BARE METAL.
3. PLACE CONCRETE BLOCKS AND SHIMS TO SUPPORT BOTH BENDS.
4. (INTENTIONALLY LEFT BLANK)
5. TAP AIR VENT CORP ON TOP OF PIPE AND A FLUSHING CORP ON BOTTOM OF PIPE, JUST UPSTREAM OF BYPASS GATE VALVE.
6. IF CONNECTION IS TO BE MADE WITH FLANGED OUTLET TEE, REPLACE TAPPING VALVE WITH FLANGE X MJ GATE VALVE, STOCK #840–506–060.
7. MAINTAIN 24" VERTICAL CLEARANCE BETWEEN VAULT LID AND BOTTOM OF SIDEWALK OR MAINTAIN 24" HORIZONTAL X 24" VERTICAL CLEAR AREA BETWEEN BACK OF CURB AND FRONT FACE OF VAULT IF NOT ATTAINABLE, CONTACT SPU WATER ENGINEERING.

CORROSION PROTECTION NOTES:

8. FLANGE INSULATING KIT SHALL BE INSTALLED WHERE THE SUPPLY MAIN IS CATHODICALLY PROTECTED.
9. WHEN SERVICE IS SUPPLIED FROM A TAPE–COATED OR OTHER CORROSION PROTECTED SUPPLY MAIN, THE SERVICE PIPING SHALL BE PROVIDED WITH A MATCHING COATING SYSTEM, AND THE JOINTS SHALL BE BONDED AND WAX TAPE COATED.
10. DETAILS AND MATERIALS FOR CORROSION PROTECTION MEASURES SHALL CONFORM TO THE RELATED CORROSION PROTECTION STANDARD PLANS. THE MATERIALS LIST ABOVE DOES NOT INCLUDE ALL THE MATERIALS REQUIRED FOR THE STANDARD PLANS.

6" COMBINATION FIRE/DOMESTIC SERVICE INSTALLATION NOTES

VAULT SERIAL #	DATE	MARK	NATURE REVISIONS	MADE	CHK'D	REV'D

DSG
17–14B

APPROVED FOR ADVERTISING
FAS PURCHASING AND CONTRACTING DIRECTOR
SEATTLE, WASHINGTON

BY: . . . . . .
FAS PURCHASING AND CONTRACTING DIRECTOR

INITIALS AND DATE	INITIALS AND DATE
DESIGNED	REVIEWED: DES. CONST. SDOT PROJ. MGR.
CHECKED	
DRAWN	RECEIVED
CHECKED	REVISED AS BUILT

ALL WORK SHALL BE DONE IN ACCORDANCE WITH THE CITY OF SEATTLE STANDARD PLANS AND SPECIFICATIONS AND OTHER DOCUMENTS CALLED FOR IN SECTION 0–02.3 OF THE PROJECT MANUAL.

Seattle Public Utilities

ORDINANCE NO. PW NO.

SCALE: AS NOTED

SEATTLE PUBLIC UTILITIES
DESIGN STANDARDS AND GUIDELINES

JOB PC CO
VPI #
SHEET OF

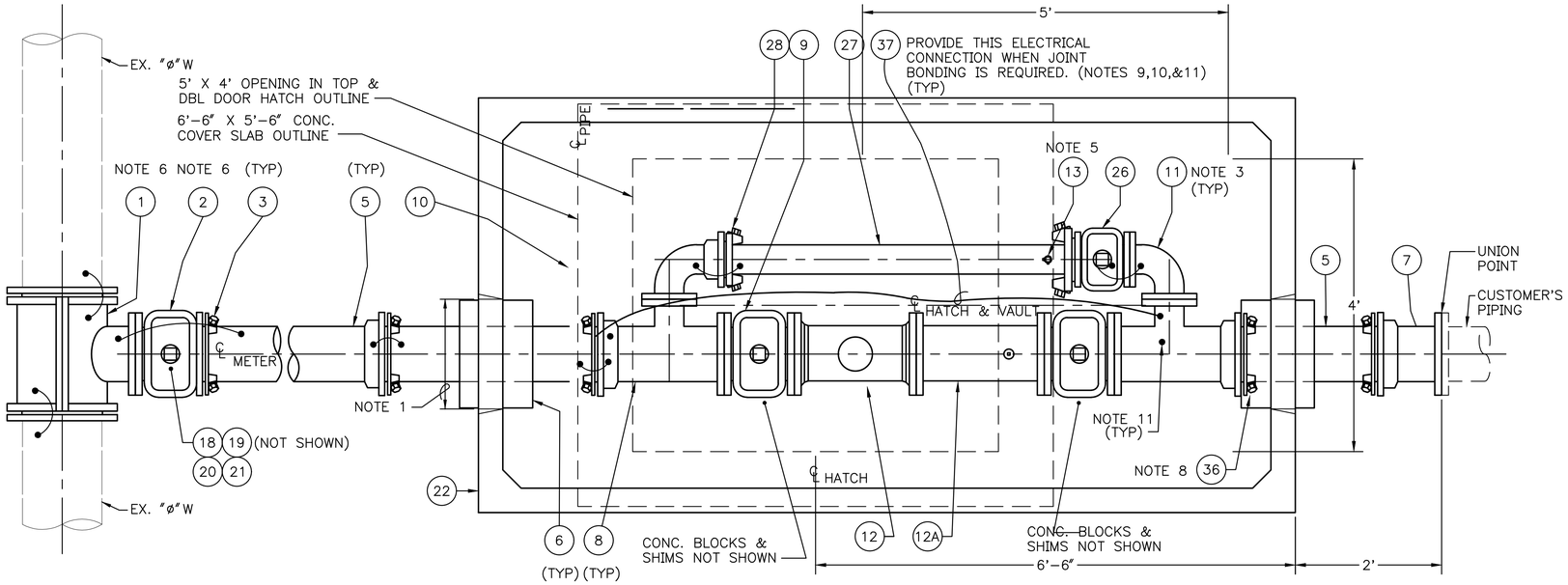

PLAN

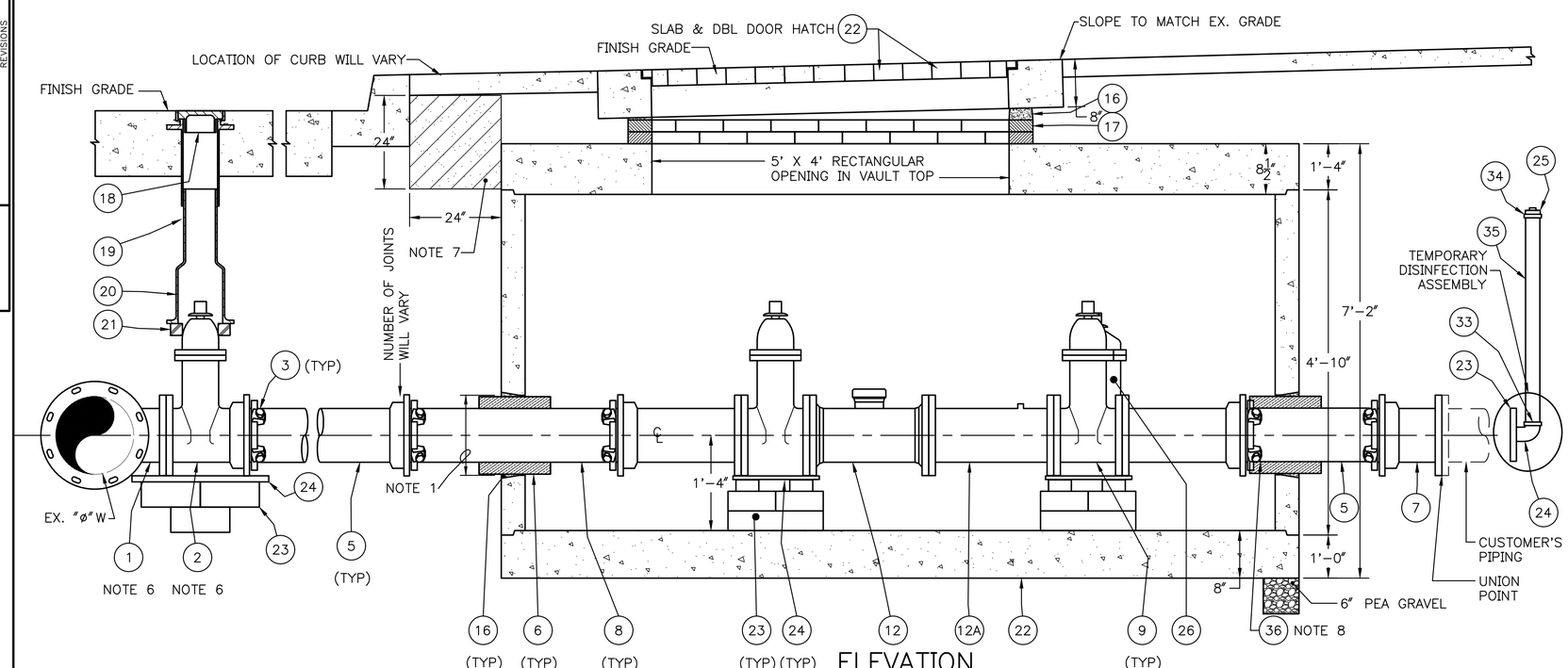

ELEVATION

8" COMBINATION FIRE/DOMESTIC SERVICE MATERIAL LIST

ITEM	QTY	UNIT	SIZE	STOCK NUMBER	DESCRIPTION
1	1	EA	ø X 8"		EPOXY TAPPING SLEEVE (NOTE 6)
2	1	EA	8"	840-531-080	TAPPING GATE VALVE, TAP FLG X MJ (NOTE 6)
3	5	EA	8"	814-102-081	WEDGE RESTRAINER GLAND (MEGALUG FOLLOWER)
4	3	EA	10LB PAIL	450-145-050	JET PLUG COMPOUND
5	A.N.		8"	826-005-081	DUCTILE IRON PIPE, MJ, CL 52, CEM LINED
6	9	SF	2" THICK	825-125-020	ETHAFOAM MATERIAL
7	1	EA	8"	820-124-080	HUB & FLANGE, MJ X FLG, NO SHACKLE EARS
8	2	EA	8" X 8" X 4"	836-311-080	TEE, DI, 8"MJ X 8"FLG X 4"FLG
9	2	EA	8"	840-504-080	GATE VALVE, CL 125 FLG X CL 125 FLG
10	1	EA	4"	879-003-080	BEND, 90°, DI, CL 125 FLG X MJ
11	1	EA	4"	809-049-040	90° BEND, DI, CL 125, FLGxFLG
12	1	EA	8"	879-007-180	ZENNER ULTRASONIC METERS
12A	1	EA	8" X 21-1/8"	811-005-801	SPOOL W/ 2IN OFFSET TEST PORT
13	2	EA	3/4" X 3/4"	840-357-007	CORP STOP, AWWA COMP
	2	SACK	60 LBS	210-300-015	PREMIX CONCRETE
17	10	EA	STD	210-200-001	BRICK
18	1	EA	#2	822-000-000	STD VALVE BOX LID
19	1	EA	#2	822-001-000	STD VALVE BOX TOP
20	1	EA	#2	822-001-001	STD VALVE BOX BOTTOM
21	1	EA	STD	825-140-000	ETHAFOAM RING
22	1	EA	5' X 10'-6" INSIDE	210-410-506	CONC VAULT MODIFIED UTILITY VAULT 5106
23	10	EA	4"X8"X16"	210-100-002	CONCRETE BLOCK
24	6	EA	1/4" X 12" X 12"	827-100-120	STEEL PLATE
	4	EA	3/4" X 1 - 1/4" X 6"	400-540-122	STEEL WEDGE
	4	EA	5"X1"x1/2"	400-540-125	STEEL RAISING WEDGE
26	1	EA	8" X 2"	813-552-133	REDUCING FLANGE, DI, CL 125 FLG X FIPT
27	1	EA	2"	810-269-200	90° STREET ELBOW, GALV
28	1	EA	2"	828-500-020	PIPE PLUG, MIPT, GALV STL, SQUARE HEAD
30	1	EA	4"	840-501-040	GATE VALVE, CL 125 FLG X CL 125 MJ
31	A.N.		4"	826-005-041	DUCTILE IRON PIPE, MJ CL52, CEM LINED
32	2	EA	4"	814-102-041	WEDGE RESTRAINER GLAND (MEGALUG FOLLOWER)
	7	EA	8" X 13"	813-099-025	RUBBER GASKET
	56	EA	0'-0 3/4"	420-410-020	HEX NUT
	16	EA	3/4" X 3"	420-215-228	HEX BOLT
	24	EA	3/4"X3-1/2"	420-215-232	BOLT
	8	EA	3/4"X6"	420-235-055	STUD BOLT
	1	EA	2"	840-050-020	BALL VALVE (BRASS)
	1	EA	2"	824-120-001	CLOSED NIPPLE IPT (BRASS)
	1	EA	2"	828-150-020	PLUG, PIPE BRASS IPT
	3	EA	4"	813-099-005	RUBBER GASKET
	24	EA	⅝"x3¼"	422-215-192	BOLTS
	24	EA	⅝"	420-410-016	NUTS
33	1	EA		812-103-020	2" MIPT X CTS BRASS COMPRESSION FITTING
34	1	EA		812-102-020	2" FIPT X CTS BRASS COMPRESSION FITTING
35	10	LF		826-003-020	2" COPPER PIPE, SOFT K
38	1	EA	8"	840-503-080	GATE VALVE, 8" RESILIENT SEAT, CL125 FLxCL 125 FL
39	2	EA	8"	809-079-080	BEND, MJ, DI, 8IN 90DEG, W/OUT FOLLOWER, BOLT, GASKET

A.N. = AS NEEDED

8" COMBO FIRE/DOMESTIC SERVICE INSTALLATION AND MATERIALS LIST

VAULT SERIAL #	DATE	MARK	NATURE REVISIONS	MADE	CHK'D	REV'D

DSG
17-15A

APPROVED FOR ADVERTISING
FAS PURCHASING AND CONTRACTING DIRECTOR
SEATTLE, WASHINGTON

BY: . . . . . .
FAS PURCHASING AND CONTRACTING DIRECTOR

INITIALS AND DATE	INITIALS AND DATE
DESIGNED	REVIEWED: DES. CONST. SDOT PROJ. MGR.
CHECKED	
DRAWN	RECEIVED
CHECKED	REVISED AS BUILT

ALL WORK SHALL BE DONE IN ACCORDANCE WITH THE CITY OF SEATTLE STANDARD PLANS AND SPECIFICATIONS AND OTHER DOCUMENTS CALLED FOR IN SECTION 0-02.3 OF THE PROJECT MANUAL.

Seattle Public Utilities

ORDINANCE NO. PW NO.

SCALE: AS NOTED

SEATTLE PUBLIC UTILITIES
DESIGN STANDARDS AND GUIDELINES

JOB PC CO
VPI #
SHEET OF

ALTERNATE INSTALLATION – ROTATED VAULT

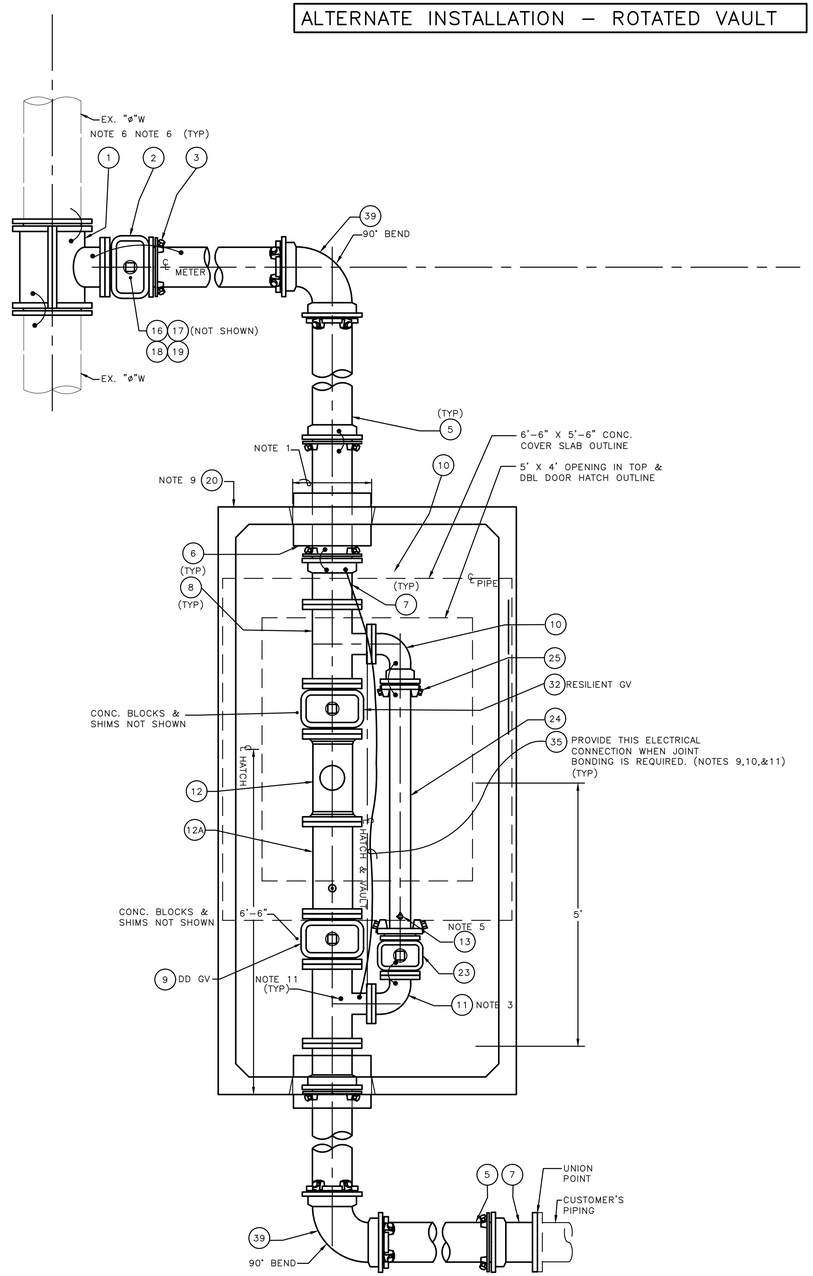

CORROSION PROTECTION MATERIAL LIST

34	1	EA	INSULATION FLANGE KIT (NOTE 8)	0'-8"	813-050-060
35	12	LF	HMW/ PE STRANDED JOINT BOND CABLE	#6AWG	472-642-006
	4	ROLL	WAX TAPE (SEE NOTES 2 & 11)	4" X 9"	454-050-040
	2	ROLL	WAX TAPE (SEE NOTES 2 & 11)	6" X 9"	450-050-060
	1	EA	WAX TAPE PRIMER (SEE NOTES 2 & 11)	GAL	450-100-000
	5	EA	CADWELD WIRE 18" LONG	#2AWG	075-200-180
	2	EA	CADWELD WIRE 24" LONG	#2AWG	075-200-240
	22	EA	CADWELD SHOT	#CA15	075-200-008
	22	EA	ROYSTON HANDI-CAP II	CAPSULE	075-200-006
	1	EA	ROYSTON 747 ROY BOND PRIMER	16 OZ	075-200-007

NOTES:

1. CONSTRUCT VAULT WITH MIN 18" SQUARE KNOCKOUTS, LOCATED WHERE SHOWN.
2. APPLY TRENTON WAX TAPE #1 OR TWO COATS OF MASTIC PAINT TO SHACKLE ROD ENDS, BOLTS, NUTS, WASHERS, AND OTHER BARE METAL.
3. PLACE CONCRETE BLOCKS AND SHIMS TO SUPPORT BOTH BENDS.
4. (INTENTIONALLY LEFT BLANK)
5. TAP AIR VENT CORP ON TOP OF PIPE AND A FLUSHING CORP ON BOTTOM OF PIPE, JUST UPSTREAM OF BYPASS GATE VALVE.
6. IF CONNECTION IS TO BE MADE WITH FLANGED OUTLET TEE, REPLACE TAPPING VALVE WITH FLANGE X MJ GATE VALVE, STOCK #840-506-080.
7. MAINTAIN 24" VERTICAL CLEARANCE BETWEEN VAULT LID AND BOTTOM OF SIDEWALK OR MAINTAIN 24" HORIZONTAL X 24" VERTICAL CLEAR AREA BETWEEN BACK OF CURB AND FRONT FACE OF VAULT IF NOT ATTAINABLE, CONTACT SPU WATER ENGINEERING.

CORROSION PROTECTION NOTES:

8. FLANGE INSULATING KIT SHALL BE INSTALLED WHERE THE SUPPLY MAIN IS CATHODICALLY PROTECTED.
9. WHEN SERVICE IS SUPPLIED FROM A TAPE-COATED OR OTHER CORROSION PROTECTED SUPPLY MAIN, THE SERVICE PIPING SHALL BE PROVIDED WITH A MATCHING COATING SYSTEM, AND THE JOINTS SHALL BE BONDED AND WAX TAPE COATED.
10. DETAILS AND MATERIALS FOR CORROSION PROTECTION MEASURES SHALL CONFORM TO THE RELATED CORROSION PROTECTION STANDARD PLANS. THE MATERIALS LIST ABOVE DOES NOT INCLUDE ALL THE MATERIALS REQUIRED FOR THE STANDARD PLANS.
11. CAD WELDS WILL REQUIRE AN ERICO #6AWG WELDER FOR 8" DIP.

8" COMBINATION FIRE/DOMESTIC SERVICE INSTALLATION NOTES

VAULT SERIAL #	DATE	MARK	NATURE REVISIONS	MADE	CHK'D	REV'D

DSG
17-15B

APPROVED FOR ADVERTISING
FAS PURCHASING AND CONTRACTING DIRECTOR
SEATTLE, WASHINGTON

BY: . . . . . .
FAS PURCHASING AND CONTRACTING DIRECTOR

INITIALS AND DATE	INITIALS AND DATE
DESIGNED	REVIEWED: DES. CONST. SDOT PROJ. MGR.
CHECKED	
DRAWN	RECEIVED
CHECKED	REVISED AS BUILT

ALL WORK SHALL BE DONE IN ACCORDANCE WITH THE CITY OF SEATTLE STANDARD PLANS AND SPECIFICATIONS AND OTHER DOCUMENTS CALLED FOR IN SECTION 0-02.3 OF THE PROJECT MANUAL.

Seattle Public Utilities

ORDINANCE NO. PW NO.

SCALE: AS NOTED

SEATTLE PUBLIC UTILITIES
DESIGN STANDARDS AND GUIDELINES

JOB PC CO
VPI #
SHEET OF

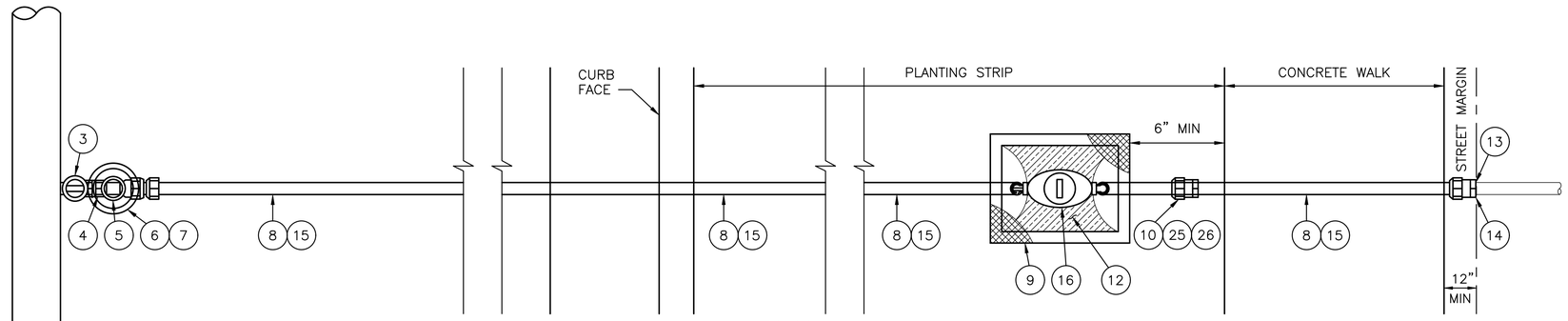

PLAN
NTS

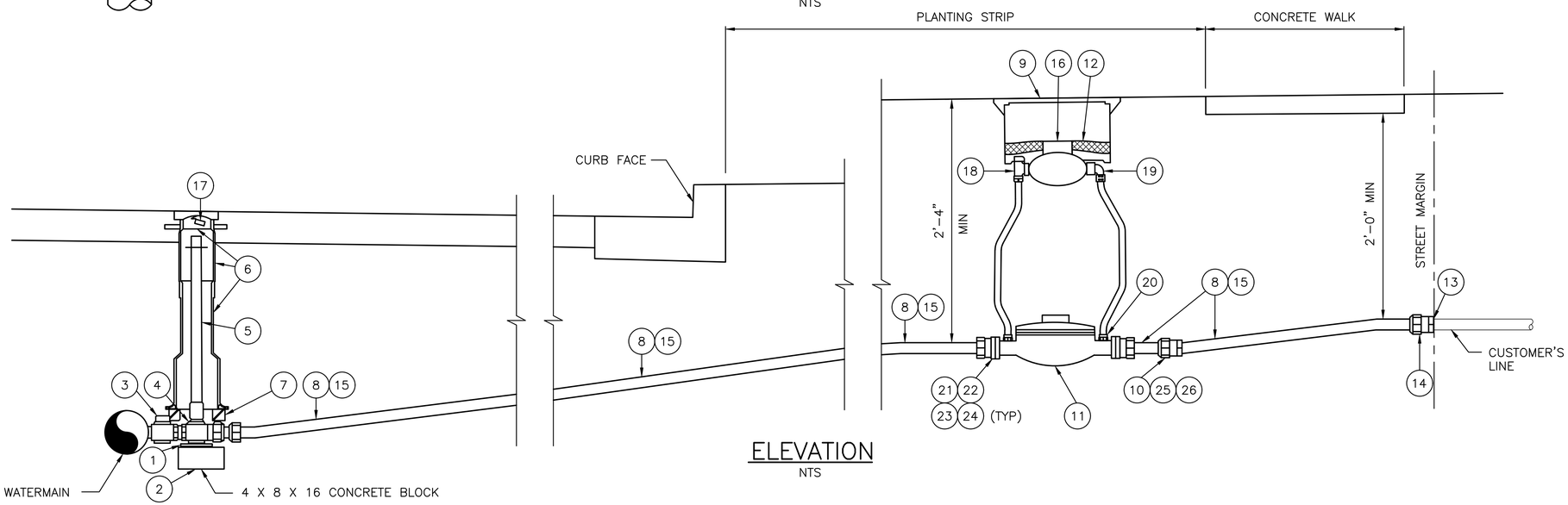

ELEVATION
NTS

2" DC SERVICES – MATERIAL LIST

ITEM	QTY	UNITS	DESCRIPTION	NUMBER
1	AS NEEDED	EA	STEEL WEDGES AND/OR 12" X 12" STEEL PLATE(S)	
2	AS NEEDED	EA	4 X 8 X 16 CONCRETE BLOCK	
3	1	EA	1 1/2" AWWA X 2" MIPT BALL TYPE BRASS CORPORATION STOP	MC # 3121B–1 1/2 IN
4	1	EA	2" BRASS CURB STOP, FIPT X COMP & W/ 2" OPERATING NUT	MC # 6102–22–2
5	AS NEEDED	EA	VALVE OPERATING NUT EXTENSION, SEATTLE STD PLAN No. 315b	
6	1	EA	VALVE BOX W/LID, SEATTLE STD PLAN No. 315a	
7	1	EA	10" O.D. X 6" I.D. X 2" THICK PLASTIC FOAM RING	ETHAFOAM
8	*	LF	2" COPPER SERVICE TUBE, TYPE K	TRENTON #1 OR EQUAL
9	1	EA	#2 METER BOX AND LID	OLYMPIC F. SM29
10	1	EA	2" COUPLING, COMP X FIPT	
11	1	EA	3" DETECTOR CHECK	
12	1	EA	INSULATION BLANKET 13" X 18" #2	
13	1	EA	2" PLUG, PLASTIC THREADED	
14	1	EA	2" UNION, FIPT X COMP	
15	*	EA	IF WATERMAIN IS COATED, WRAP SERVICE W/80 MIL WAX TAPE WRAP OR KAMCO 26MIL EXTRUDED PE FACTORY COATED 2" COPPER	TRENTON #1 WAX TAPE OR EQUAL
16	1	EA	WATER METER 5/8" X 3/4"	
17	1	EA	SIGN, "ILLEGAL TO OPERATE"	
18	1	EA	3/4" VALVE, FLARED FITTING, TSO	
19	1	EA	3/4" VALVE, ANGLE CHECK	
20	2	EA	3/4" ADAPTER, FLARED FITTING	
21	2	EA	2" FITTING, METER FLANGE X COMP	
22	2	EA	2" GASKET, METER FLANGE, RED	
23	4	EA	2" X 5/8" BOLT	
24	4	EA	5/8" NUT	
25	1	EA	IF WATERMAIN IS COATED, 2" ADAPTER COUPLING, COMP X MIPT	
26	1	EA	IF WATERMAIN IS COATED, 2" DIELECTRIC UNION, FIPT X FIPT	
27				

2" DC FIRE SERVICE INSTALLATION AND MATERIALS LIST

VAULT SERIAL #	DATE	MARK	NATURE REVISIONS	MADE	CHK'D	REV'D

APPROVED FOR ADVERTISING
FAS PURCHASING AND CONTRACTING DIRECTOR
SEATTLE, WASHINGTON

BY: . . . . . .
FAS PURCHASING AND CONTRACTING DIRECTOR

INITIALS AND DATE	INITIALS AND DATE
DESIGNED CHECKED	REVIEWED: DES. CONST. SDOT PROJ. MGR.
DRAWN CHECKED	RECEIVED REVISED AS BUILT

ALL WORK SHALL BE DONE IN ACCORDANCE WITH THE CITY OF SEATTLE STANDARD PLANS AND SPECIFICATIONS AND OTHER DOCUMENTS CALLED FOR IN SECTION 0-02.3 OF THE PROJECT MANUAL.

Seattle Public Utilities

ORDINANCE NO. PW NO.

SCALE: NTS

SEATTLE PUBLIC UTILITIES DESIGN STANDARDS AND GUIDELINES

JOB PC CO

VPI #

SHEET 1 OF 1

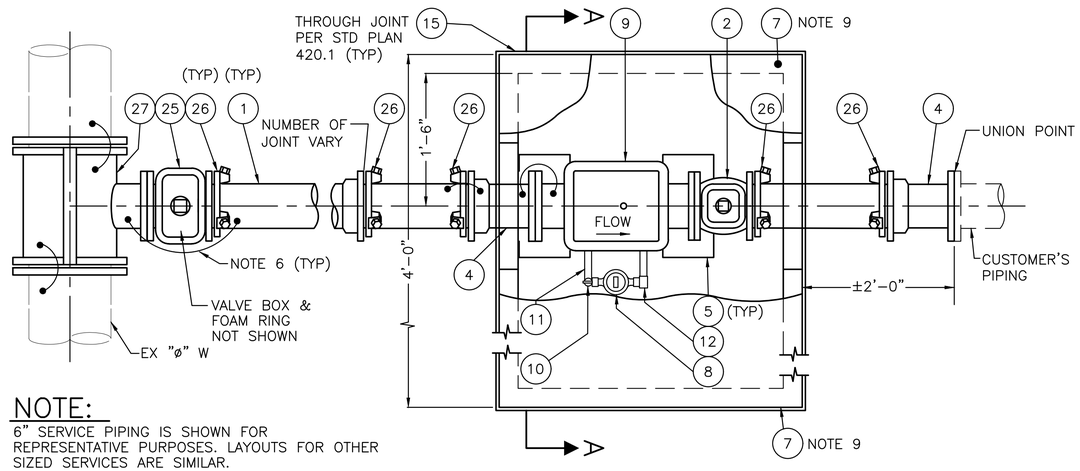

NOTE:

6" SERVICE PIPING IS SHOWN FOR REPRESENTATIVE PURPOSES. LAYOUTS FOR OTHER SIZED SERVICES ARE SIMILAR.

PLAN

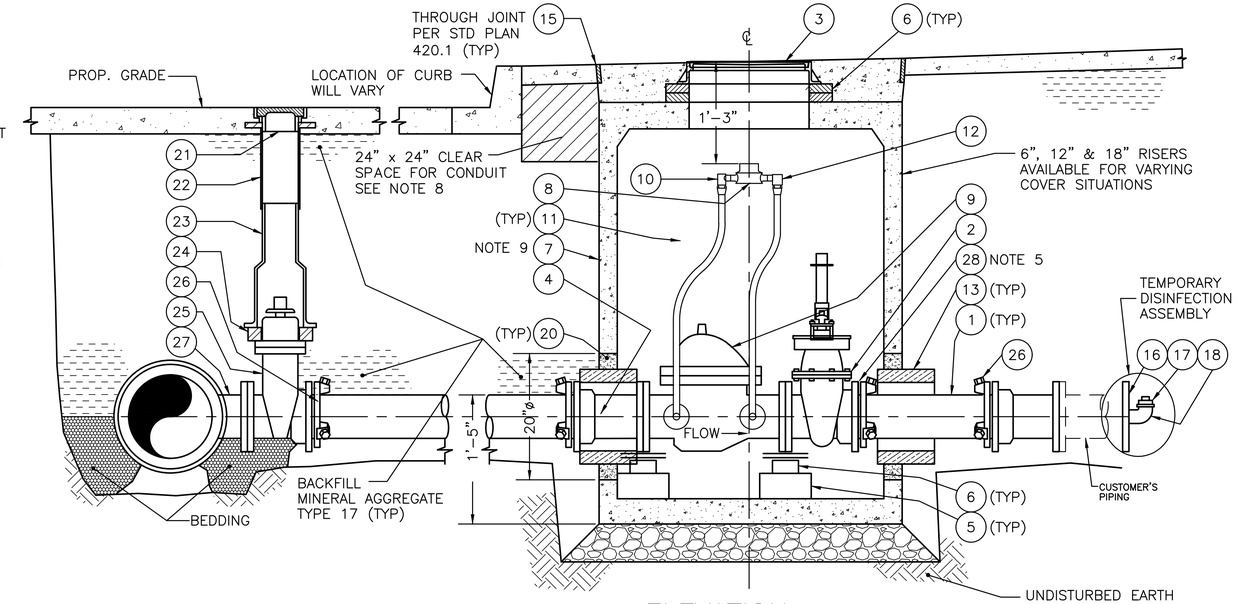

ELEVATION

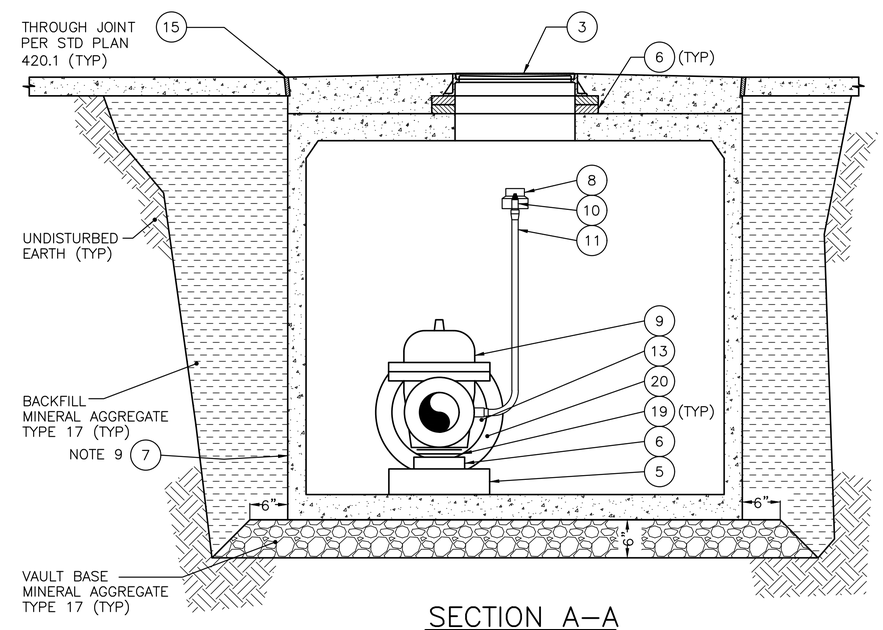

SECTION A–A

DETECTOR CHECK FIRE SVC MATERIAL LIST		4" DC SERVICE				6" DC SERVICE				8" DC SERVICE		
ITEM	DESCRIPTION	UNIT	QTY	SIZE	STOCK NUMBER	QTY	SIZE	STOCK NUMBER	QTY	SIZE	STOCK NUMBER
1	DUCTILE IRON PIPE, MJ, CL 52, CEM. LINED		A.N.	4"	826-005-041	A.N.	6"	826-005-061	A.N.	8"	826-005-081
2	GATE VALVE, FLG X MJ	EA	1	4"	840-506-040	1	6"	840-506-060	1	8"	840-506-080
3	3'-0" DIAMETER FRAME	EA	1	OPTIONAL	822-001-364	1	OPTIONAL	822-001-364	1	OPTIONAL	822-001-364
	3'-0" COVER W/INSPECTION LID	EA	1		822-000-370	1		822-000-370	1		822-000-370
	#3 METER BOX	EA	1	IF VAULT IS	822-001-011	1	IF VAULT IS	822-001-011	1	IF VAULT IS	822-001-011
	#3 LID	EA	1	NOT USED	822-000-030	1	NOT USED	822-000-030	1	NOT USED	822-000-030
4	ADAPTER, MJ X CL125 FLG	EA	3	4"	801-105-040	3	6"	801-105-060	3	8"	801-105-080
5	CONCRETE BLOCK	EA	2	4"x8"x16"	210-100-002	2	4"x8"x16"	210-100-002	2	4"x8"x16"	210-100-002
6	BRICK, STANDARD	EA	48	2"x4"x8"	210-200-001	48	2"x4"x8"	210-200-001	48	2"x4"x8"	210-200-001
7	CONCRETE VAULT & H-20 RATED VAULT TOP W/ 36"ø RING & COVER W/ INSPECTION LID AND BURKE LIFTING INSERTS (OPTIONAL)	EA	1	UTILITY VAULT 444LA	N/A OPTIONAL	1	UTILITY VAULT 444LA	N/A	1	UTILITY VAULT 504LA	N/A
8	WATER METER	EA	1	5/8" x 3/4"	879-004-703	1	5/8" x 3/4"	879-004-703	1	5/8" x 3/4"	879-004-703
9	DETECTOR CHECK VALVE	EA	1	4"	840-280-040	1	6"	840-280-060	1	8"	840-280-080
10	TSO, LOCK WING, FLARE X METER COUPLING NUT	EA	1	3/4"	840-071-007	1	3/4"	840-071-007	1	3/4"	840-071-007
11	PIPE, COPPER SOFT K	LF	10	3/4"	826-003-007	10	3/4"	826-003-007	10	3/4"	826-003-007
12	VALVE, ANGLE CHECK, FLARE X METER COUPLING NUT	EA	1	3/4"	840-211-007	1	3/4"	840-211-007	1	3/4"	840-211-007
13	ETHAFOAM MATERIAL (OPTIONAL)	SF	12	2"	825-125-020	12	2"	825-125-020	12	2"	825-125-020
14	OMITTED										
15	NON-EXTRUDING PREMOLDED JOINT FILLER (OPTIONAL)	LF	16	1/2" x 4"	N/A	16	1/2" x 4"	N/A	16	1/2" x 4"	N/A
16	REDUCING FLG, DI, CL125 X FIPT	EA	1	4" x 2"	813-500-090	1	6" x 2"	813-527-110	1	8" x 2"	813-552-133
17	PIPE PLUG, MIPT, GALV STL, SQUARE HEAD	EA	1	2"	828-500-020	1	2"	828-500-020	1	2"	828-500-020
18	90° STREET ELBOW, GALV	EA	1	2"	810-269-200	1	2"	810-269-200	1	2"	810-269-200
19	STEEL SHIM PLATE	EA	4	1/4"X12"X12"	827-100-120	4	1/4"X12"X12"	827-100-120	4	1/4"X12"X12"	827-100-120
21	STD VALVE BOX LID	EA	2	#2	822-000-000	2	#2	822-000-000	2	#2	822-000-000
22	STD VALVE BOX TOP	EA	2	#2	822-001-000	2	#2	822-001-000	2	#2	822-001-000
23	STD VALVE BOW BOTTOM	EA	1	#2	822-001-001	1	#2	822-001-001	1	#2	822-001-001
24	ETHAFOAM RING	EA	2	STD	825-140-000	2	STD	825-140-000	2	STD	825-140-000
25	TAPPING GATE VALVE, TAP FLG X MJ	EA	1	4"	840-531-040	1	6"	840-531-060	1	8"	840-531-080
26	WEDGE RESTRAINER GLAND (NOTE 4)	EA	4+	4"	814-102-041	4+	6"	814-102-061	4+	8"	814-102-081
27	TAPPING SLEEVE, MJ X TAPPING FLG (NOTE 4)	EA	1	"ø" X 4"		1	"ø" X 6"		1	"ø" X 8"	
	GASKET, RUBBER	EA	3	4" X 9"	813-099-005	3	6" X 11"	813-099-015	3	8" X 13"	813-099-025

NOTES:

1. A.N. = AS NEEDED
2. CONSTRUCT VAULT WITH MIN. 20" SQUARE KNOCKOUTS WHERE SHOWN.
3. APPLY TRENTON WAX TAPE #1 OR TWO COATS MASTIC PAINT TO BOLTS, NUTS, WASHERS, AND OTHER BARE METAL.
4. IF THIS IS NEW CONSTRUCTION, USE FLANGED OUTLET TEE AND FLANGE X MJ GATE VALVE STOCK #840-506-040
9. DC FIRE SERVICES TO BE DIRECT BURIED UNLESS OTHERWISE NOTED IN WORK PLAN OR BY THE ENGINEER.

CORROSION PROTECTION NOTES:

5. FLANGE INSULATING KIT (KEYED NOTE 28) SHALL BE INSTALLED WHERE THE SUPPLY MAIN IS CATHODICALLY PROTECTED.
6. WHEN SERVICE IS SUPPLIED FROM A TAPE-COATED OR OTHER CORROSION PROTECTED SUPPLY MAIN, THE SERVICE PIPING SHALL BE PROVIDED WITH A MATCHING COATING SYSTEM, AND THE JOINTS SHALL BE BONDED AND WAX TAPE COATED.
7. DETAILS AND MATERIALS FOR CORROSION PROTECTION MEASURES SHALL CONFORM TO THE RELATED CORROSION PROTECTION STANDARD PLANS. THE MATERIALS LIST ABOVE DOES NOT INCLUDE ALL THE MATERIALS REQUIRED FOR THE STANDARD PLANS.
8. MAINTAIN 24" VERTICAL CLEARANCE BETWEEN VAULT LID AND BOTTOM OF SIDEWALK OR MAINTAIN 24" HORIZONTAL X 24" VERTICAL CLEAR AREA BETWEEN BACK OF CURB AND FRONT FACE OF VAULT IF NOT ATTAINABLE, CONTACT SPU WATER ENGINEERING.

4"–8" X 3/4" DC FIRE SERVICE INSTALLATION AND MATERIALS LIST

VAULT SERIAL #	DATE	MARK	NATURE REVISIONS	MADE	CHK'D	REV'D

APPROVED FOR ADVERTISING
FAS PURCHASING AND CONTRACTING DIRECTOR
SEATTLE, WASHINGTON

BY: . . . . . .
FAS PURCHASING AND CONTRACTING DIRECTOR

INITIALS AND DATE	INITIALS AND DATE
DESIGNED	REVIEWED: DES. CONST.
CHECKED	SDOT PROJ. MGR.
DRAWN	RECEIVED
CHECKED	REVISED AS BUILT

ALL WORK SHALL BE DONE IN ACCORDANCE WITH THE CITY OF SEATTLE STANDARD PLANS AND SPECIFICATIONS AND OTHER DOCUMENTS CALLED FOR IN SECTION 0-02.3 OF THE PROJECT MANUAL.

Seattle Public Utilities

ORDINANCE NO. PW NO.

SCALE: NTS

SEATTLE PUBLIC UTILITIES DESIGN STANDARDS AND GUIDELINES

JOB PC CO
VPI #
SHEET 1 OF 1

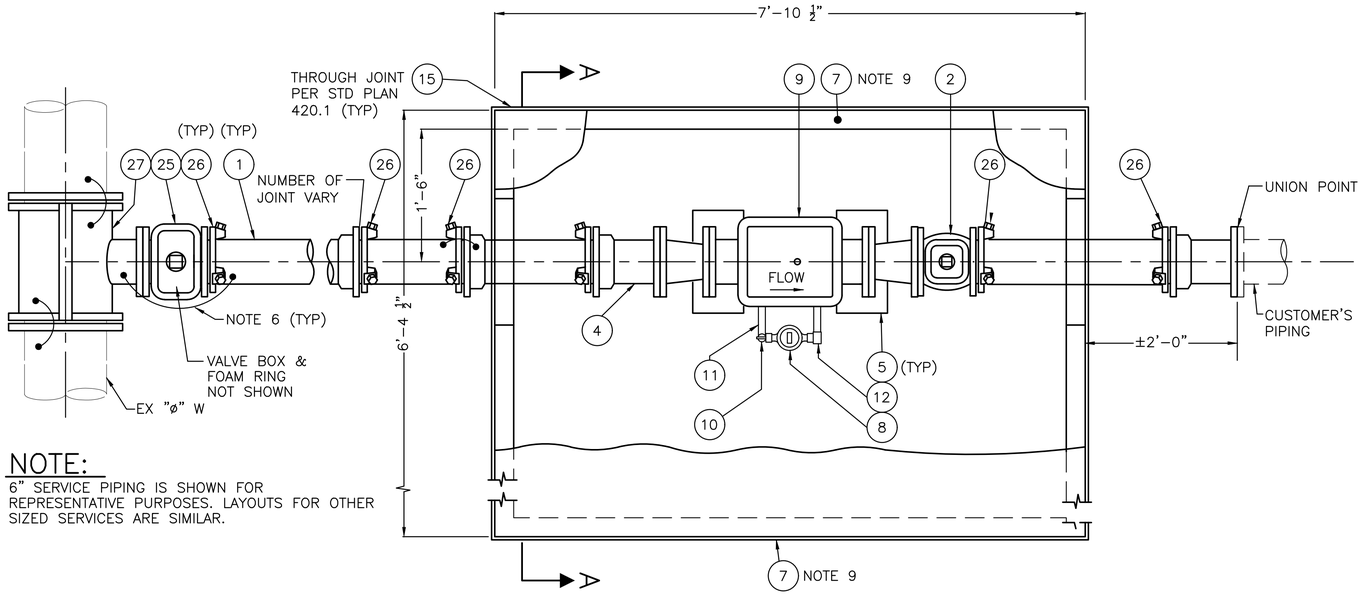

PLAN

NOTE:

6" SERVICE PIPING IS SHOWN FOR REPRESENTATIVE PURPOSES. LAYOUTS FOR OTHER SIZED SERVICES ARE SIMILAR.

DETECTOR CHECK FIRE SVC MATERIAL LIST				10" DC SERVICE	
ITEM	DESCRIPTION	UNIT	QTY	SIZE	STOCK NUMBER
1	DUCTILE IRON PIPE, MJ, CL 52, CEM. LINED		A.N.	12"	826-005-121
2	GATE VALVE, FLG X MJ	EA	1	12"	840-506-120
3	3'-0" DIAMETER FRAME	EA	1	OPTIONAL	822-001-364
	3'-0" COVER W/INSPECTION LID	EA	1		822-000-370
	#3 METER BOX	EA	1	IF VAULT IS NOT USED	822-001-011
	#3 LID	EA	1		822-000-030
4	FLANGE ADOPTOR. WITHOUT SHACKLE EARS, MJ X CL125 FLG	EA	3	12"	820-145-120
5	CONCRETE BLOCK	EA	2	4"x8"x16"	210-100-002
6	BRICK, STANDARD	EA	48	2"x4"x8"	210-200-001
7	CONCRETE VAULT & H-20 RATED VAULT TOP W/ 36"ø RING & COVER W/ INSPECTION LID AND BURKE LIFTING INSERTS (OPTIONAL)	EA	1	UTILITY VAULT 675LA	N/A
8	WATER METER	EA	1	5/8" x 3/4"	879-004-703
9	DETECTOR CHECK VALVE	EA	1	10"	840-280-010
10	TSO, LOCK WING, FLARE X METER COUPLING NUT	EA	1	3/4"	840-071-007
11	PIPE, COPPER SOFT K	LF	10	3/4"	826-003-007
12	VALVE, ANGLE CHECK, FLARE X METER COUPLING NUT	EA	1	3/4"	840-211-007
13	ETHAFOAM MATERIAL (OPTIONAL)	SF	12	2"	825-125-020
14	OMITTED				
15	NON-EXTRUDING PREMOLDED JOINT FILLER (OPTIONAL)	LF	16	1/2" x 4"	N/A
16	REDUCING FLG, DI, CL125 X FIPT	EA	1	12" x 2"	813-563-140
17	PIPE PLUG, MIPT, GALV STL, SQUARE HEAD	EA	1	2"	828-500-020
18	90° STREET ELBOW, GALV	EA	1	2"	810-269-200
19	STEEL SHIM PLATE	EA	4	1/4"X12"X12"	827-100-120
21	STD VALVE BOX LID	EA	2	#2	822-000-000
22	STD VALVE BOX TOP	EA	2	#2	822-001-000
23	STD VALVE BOW BOTTOM	EA	1	#2	822-001-001
24	ETHAFOAM RING	EA	2	STD	825-140-000
25	TAPPING GATE VALVE, TAP FLG X MJ	EA	1	12"	840-531-120
26	WEDGE RESTRAINER GLAND (NOTE 4)	EA	4+	12"	814-102-121
27	TAPPING SLEEVE, MJ X TAPPING FLG (NOTE 4)	EA	1	"ø" X 12"	
	GASKET, RUBBER	EA	2	10" X 16"	813-099-035
	GASKET, RUBBER		4	12" X 19"	813-099-045
	REDUCER, DI, FLG		2	12" X 10"	830-490-120

NOTES:

1. A.N. = AS NEEDED
2. CONSTRUCT VAULT WITH MIN. 20" SQUARE KNOCKOUTS WHERE SHOWN.
3. APPLY TRENTON WAX TAPE #1 OR TWO COATS MASTIC PAINT TO BOLTS, NUTS, WASHERS, AND OTHER BARE METAL.
4. IF THIS IS NEW CONSTRUCTION, USE FLANGED OUTLET TEE AND FLANGE X MJ GATE VALVE STOCK #840-506-040
9. DC FIRE SERVICES TO BE DIRECT BURIED UNLESS OTHERWISE NOTED IN WORK PLAN OR BY THE ENGINEER.

CORROSION PROTECTION NOTES:

5. FLANGE INSULATING KIT (KEYED NOTE 28) SHALL BE INSTALLED WHERE THE SUPPLY MAIN IS CATHODICALLY PROTECTED.
6. WHEN SERVICE IS SUPPLIED FROM A TAPE-COATED OR OTHER CORROSION PROTECTED SUPPLY MAIN, THE SERVICE PIPING SHALL BE PROVIDED WITH A MATCHING COATING SYSTEM, AND THE JOINTS SHALL BE BONDED AND WAX TAPE COATED.
7. DETAILS AND MATERIALS FOR CORROSION PROTECTION MEASURES SHALL CONFORM TO THE RELATED CORROSION PROTECTION STANDARD PLANS. THE MATERIALS LIST ABOVE DOES NOT INCLUDE ALL THE MATERIALS REQUIRED FOR THE STANDARD PLANS.
8. MAINTAIN 24" VERTICAL CLEARANCE BETWEEN VAULT LID AND BOTTOM OF SIDEWALK OR MAINTAIN 24" HORIZONTAL X 24" VERTICAL CLEAR AREA BETWEEN BACK OF CURB AND FRONT FACE OF VAULT IF NOT ATTAINABLE, CONTACT SPU WATER ENGINEERING.

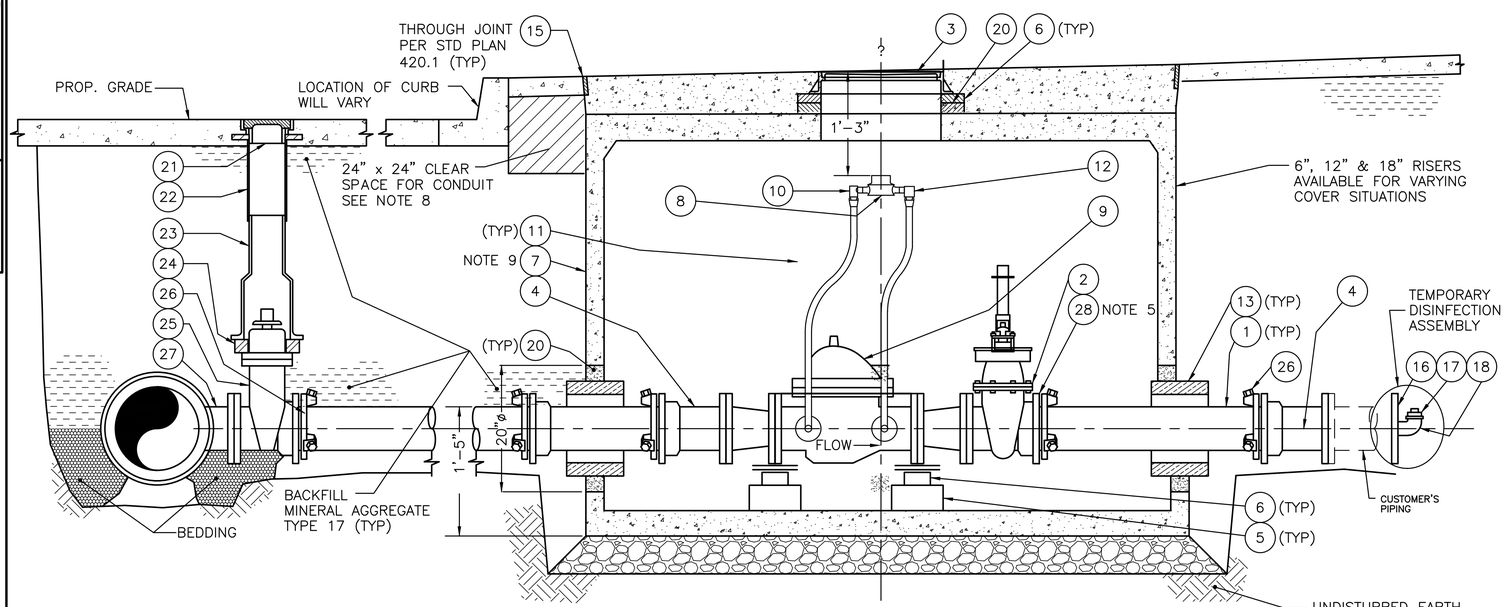

ELEVATION

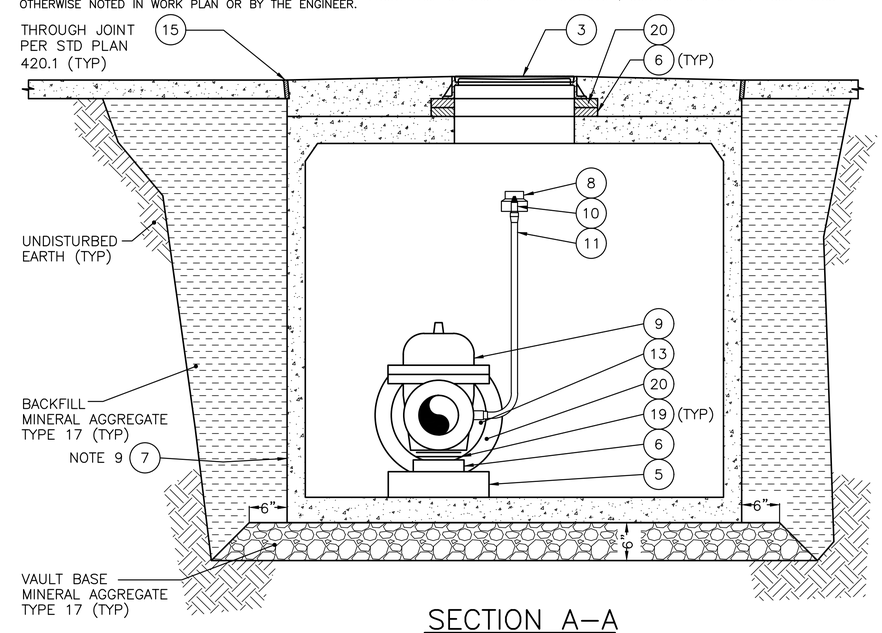

SECTION A-A

10" X 3/4" DC FIRE SERVICE INSTALLATION AND MATERIAL LIST

VAULT SERIAL #	MARK	DATE	NATURE REVISIONS	MADE	CHK'D	REV'D

APPROVED FOR ADVERTISING
FAS PURCHASING AND CONTRACTING DIRECTOR
SEATTLE, WASHINGTON

BY: . . . . . .
FAS PURCHASING AND CONTRACTING DIRECTOR

INITIALS AND DATE	INITIALS AND DATE
DESIGNED CHECKED	REVIEWED: DES. CONST. SDOT PROJ. MGR.
DRAWN CHECKED	RECEIVED REVISED AS BUILT

ALL WORK SHALL BE DONE IN ACCORDANCE WITH THE CITY OF SEATTLE STANDARD PLANS AND SPECIFICATIONS AND OTHER DOCUMENTS CALLED FOR IN SECTION 0-02.3 OF THE PROJECT MANUAL.

Seattle Public Utilities

ORDINANCE NO. PW NO.

SCALE: NTS

SEATTLE PUBLIC UTILITIES
DESIGN STANDARDS AND GUIDELINES

JOB PC CO
VPI #
SHEET 1 OF 1