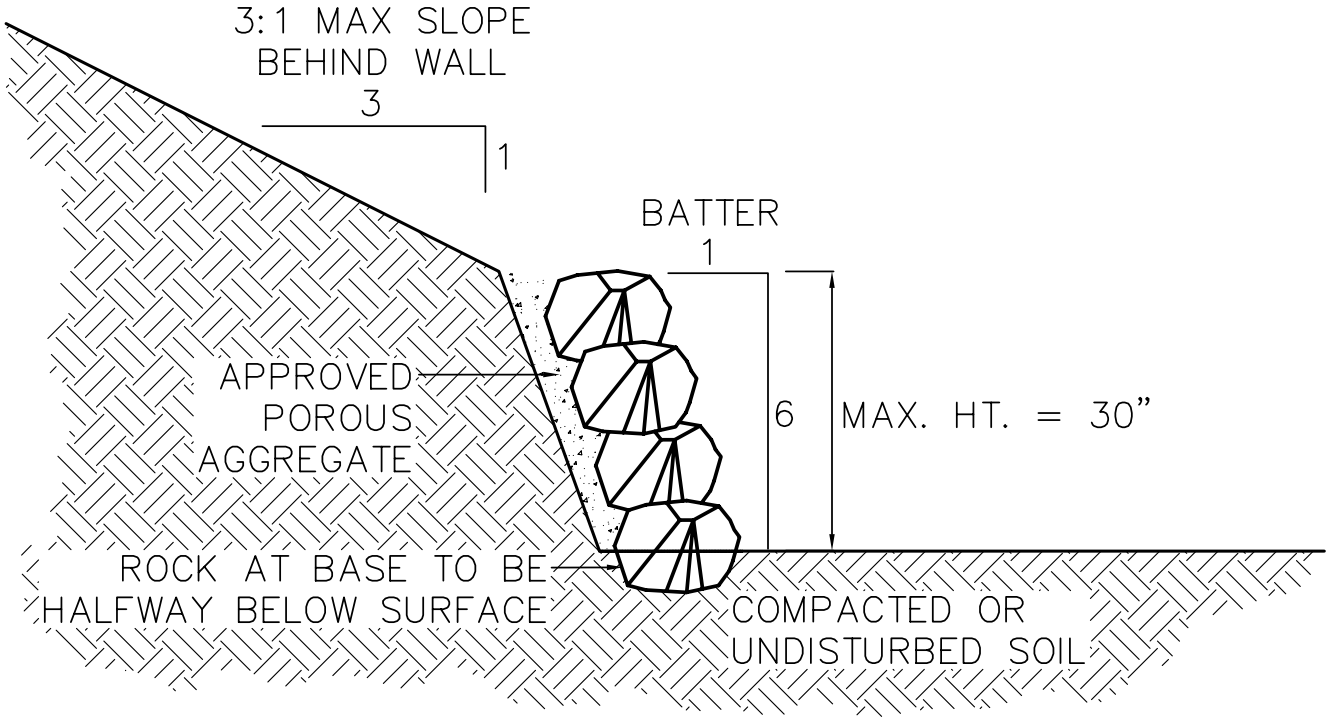

NOTES:

1. IF EITHER, SLOPE BEHIND WALL OR BATTER SLOPE, ARE EXCEEDED, THE WALL MUST BE SITE-SPECIFICALLY ENGINEERED.

2. ROCK SHALL BE FRACTURED-HAND ROCK 25-75#, W/ HEAVIER ROCK AT BASE OF WALL

City of Seattle **Department of Parks & Recreation**	**ROCK WALL DETAIL** **STD. DETAIL NO. 32 60 00.56**