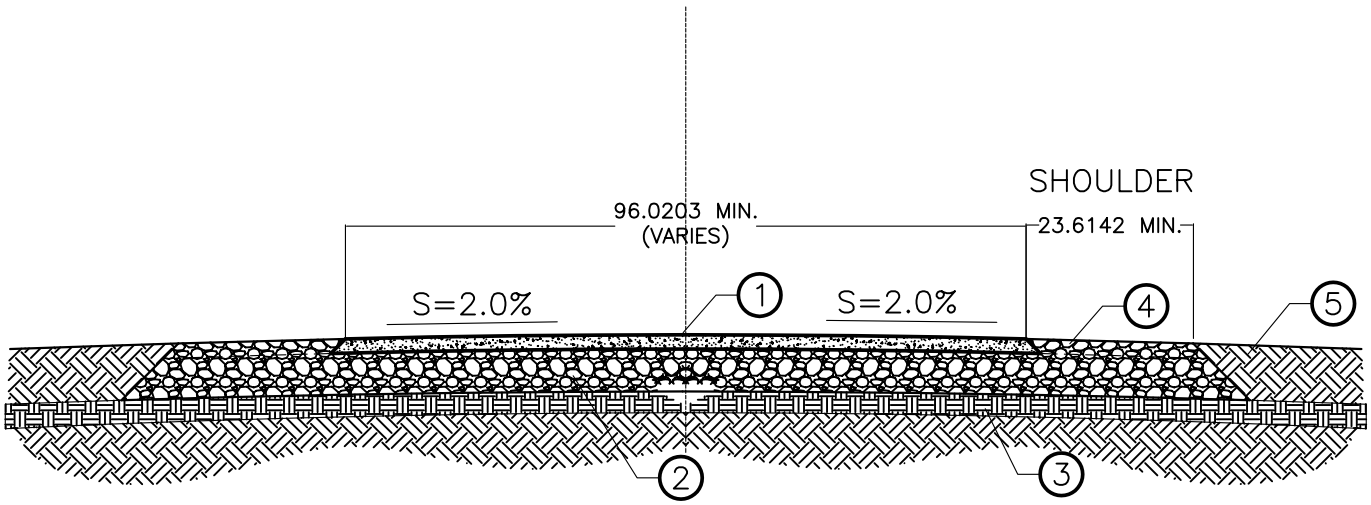

AC PAVING NOTES:

1. 2" CLASS "B" ASPHALTIC CONCRETE PAVING.
2. MIN. 4" DEPTH WSDOT STD. 9-03.9(3) CRUSHED SURFACING TOP COURSE (CSTC) PAVEMENT BASE. EXTEND MIN. 24" BEYOND ACP EDGE AT GRADE.
3. MIN. 3" SCARIFIED RECOMPACTED NATIVE SOIL OR COMPACTED FILL.
4. MIN. 24" SHOULDER BEYOND EDGE OF ALL AC PAVING. CAP CSTC BASE AGGREGATE TO MATCH SURROUNDING GRADE AFTER PAVING.
5. CONDITION BEYOND PAVEMENT SECTION VARIES PER PLAN.

City of Seattle **Department of Parks & Recreation**	**ASPHALT PATHWAY DETAIL** **STD. DETAIL NO. 32 60 00.26**