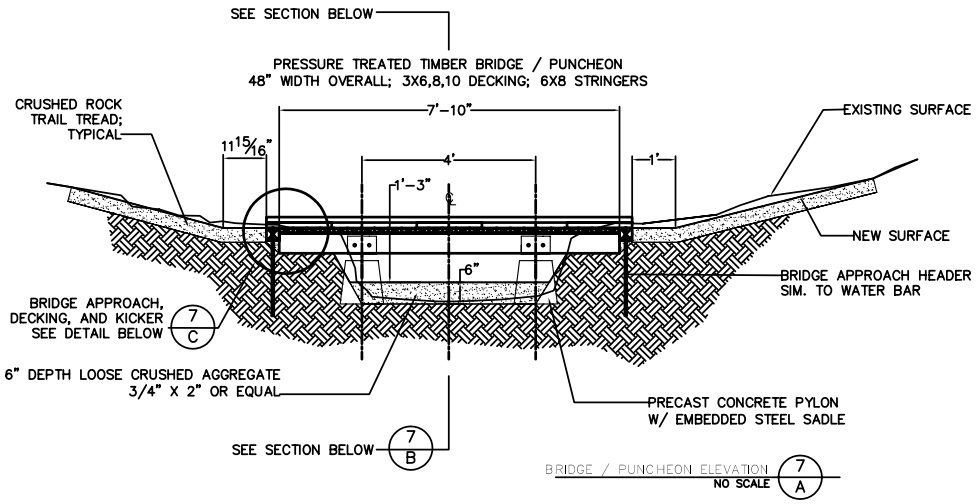

7A

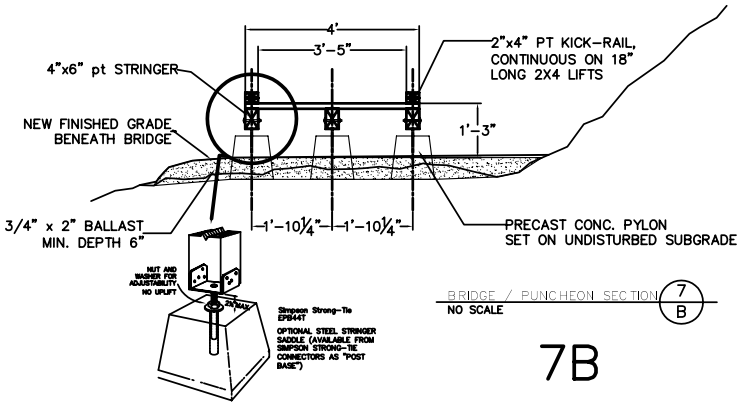

7B

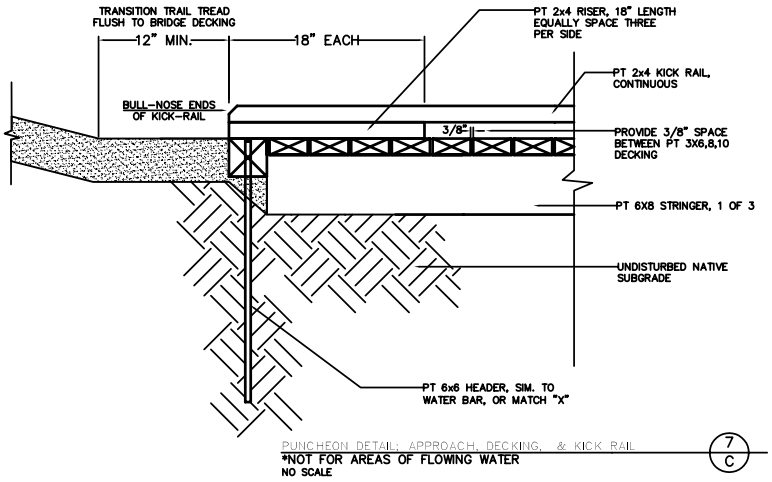

7C

City of Seattle Department of Parks & Recreation	**PUNCHEON DETAILS** **STD. DETAIL NO. 32 60 00.46**