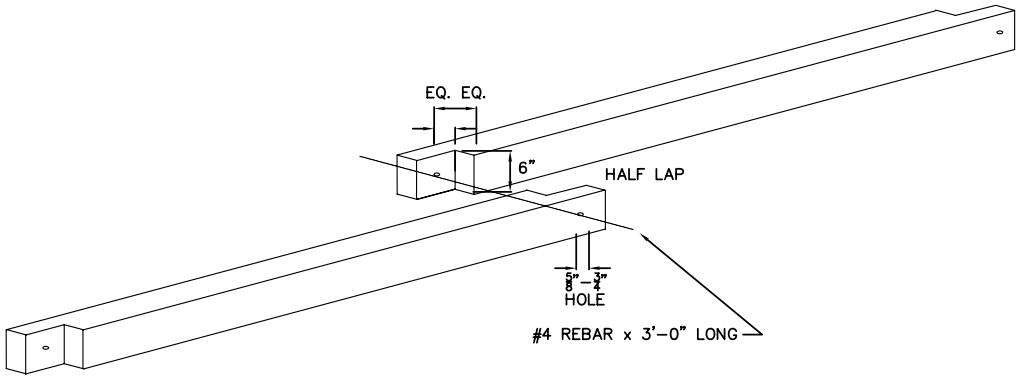

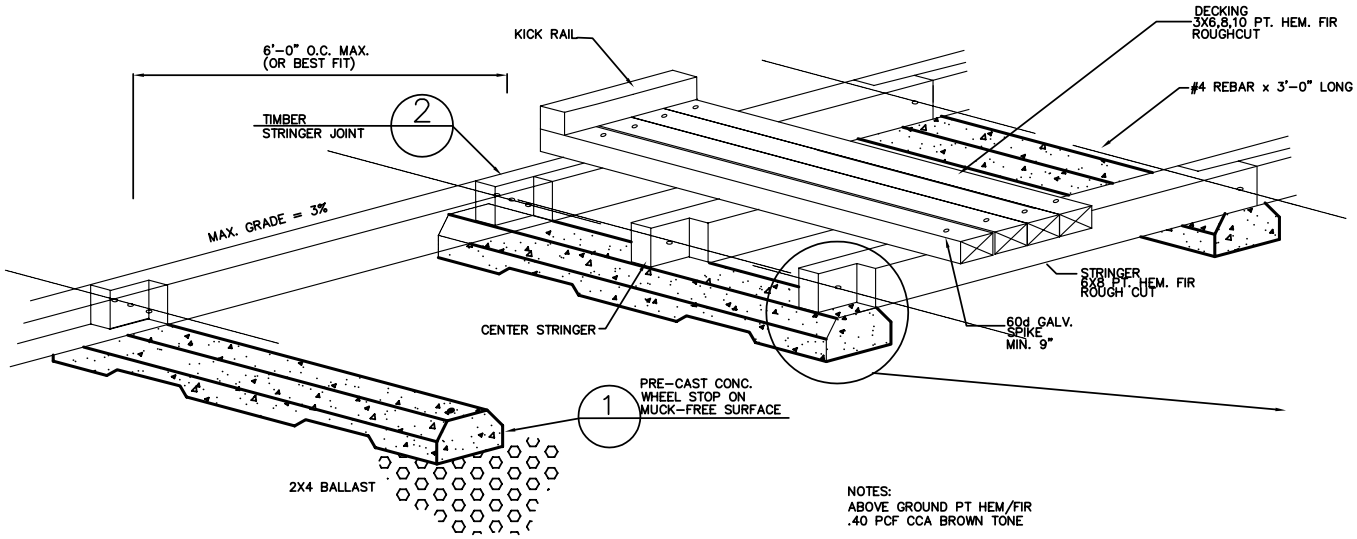

NOTES:
ABOVE GROUND PT HEM/FIR
.40 PCF CCA BROWN TONE

TREAT ALL DRILL HOLES & DINGS W/ COPPER NARTH

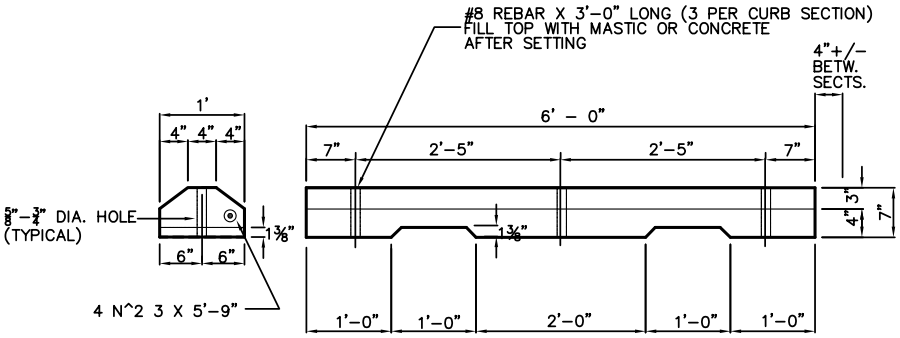

NOTES:
AVAILABLE FROM RENTON CONCRETE PRODUCTS OR UTILITY VAULT CO.

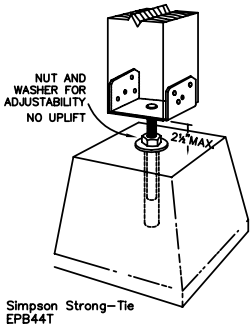

Simpson Strong–Tie EPB44T

OPTIONAL STEEL STRINGER SADDLE (AVAILABLE FROM SIMPSON STRONG–TIE CONNECTORS AS "POST BASE")

City of Seattle Department of Parks & Recreation	**PUNCHEON - MUDSILL DETAILS** **STD. DETAIL NO. 32 60 00.49**