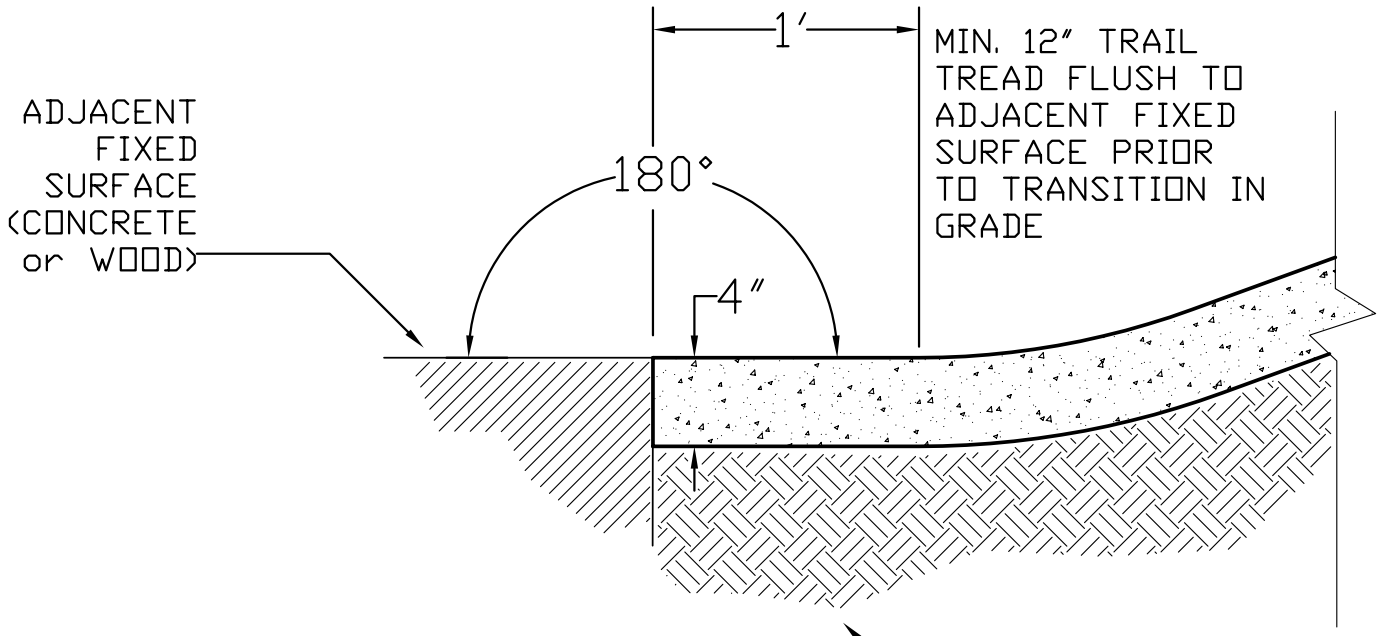

NOTES:

1. MAINTAIN THOROUGH COMPACTION TO EDGE OF ADJACENT FIXED SURFACE.

2. PROVIDE A MINIMUM 12" FLUSH TO ADJACENT FIXED SURFACE PRIOR TO TRANSITIONING SLOPE.

TRANSITION TO ADJACENT FIXED SURFACE

NO SCALE

City of Seattle **Department of Parks & Recreation**	**TRANSITION DETAIL** **STD. DETAIL NO. 32 60 00.59**