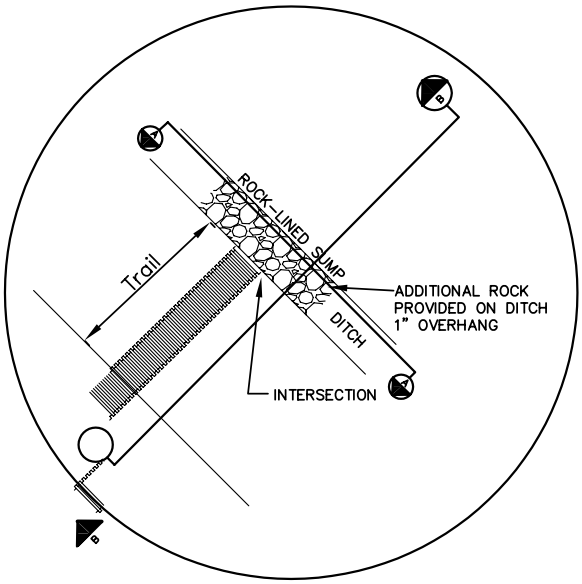

NOTE:

A ROCK-LINED SUMP IS A FEATURE USED IN ASSOCIATION WITH A CULVERT TO TRAP SILT AND OTHER SEDIMENTS BEFORE THEY ENTER THE CULVERT. WHERE DIRECTED BY THE TRAIL STATIONING PLAN TO INSTALL A CULVERT ASSOCIATED WITH A DRAINAGE DITCH, INSTALL ON THE UP-SLOPE SIDE OF THE TRAIL OR TRAIL STRUCTURE A ROCK-LINED SUMP AS FOLLOWS:

1. IDENTIFY THE INTERSECTION POINT OF THE FLOW-LINE OF THE CULVERT AND THE FLOW-LINE OF THE ASSOCIATED DITCH TO BE DRAINED. AT THE POINT OF INTERSECTION, EXCAVATE SUFFICIENT UNDISTURBED NATIVE MINERAL SOIL TO ALLOW THE EXCAVATION TO BE TIGHTLY LINED WITH ROCK, LEAVING A SUMP APPROXIMATELY 1' DEEP BELOW BOTTOM OF DITCH INVERT OF CULVERT WITH A CAPACITY OF 2 CUBIC FEET. DIMENSIONS FOR SUMP SHOULD BE APPROX. 1'-5" SQUARE OR 1'7" DIA.

2. BEGINNING WITH THE BOTTOM OF THE SUMP AND WORKING UP TO THE BOTTOM OF THE ASSOCIATED DRAINAGE DITCH, LINE THE SUMP WITH ROCK. ROCK SHOULD FIT TIGHTLY, WITH NO GAPS OVER 2" IN ANY DIMENSION. PROVIDE ADDITIONAL ROCK ACROSS THE BOTTOM OF THE DRAINAGE DITCH WHICH OVER-HANGS THE SUMP 1" TO PROTECT THE SUMP WALLS FROM OUTWASH.

3. PACK JOINTS IN THE BOTTOM OF THE SUMP WITH 5/8" MINUS CRUSHED ROCK.

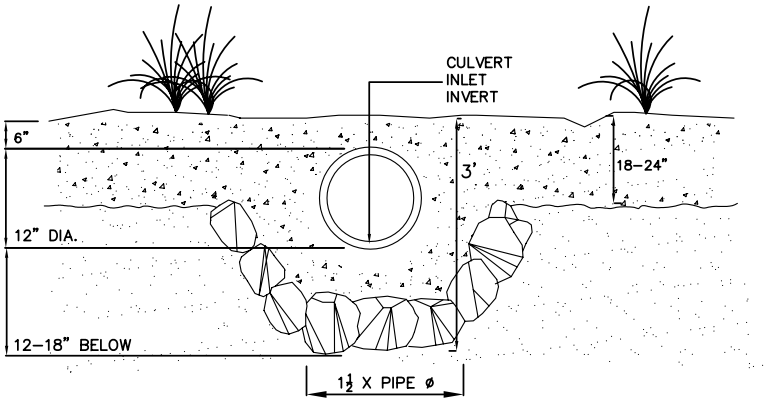

SECTION A-A

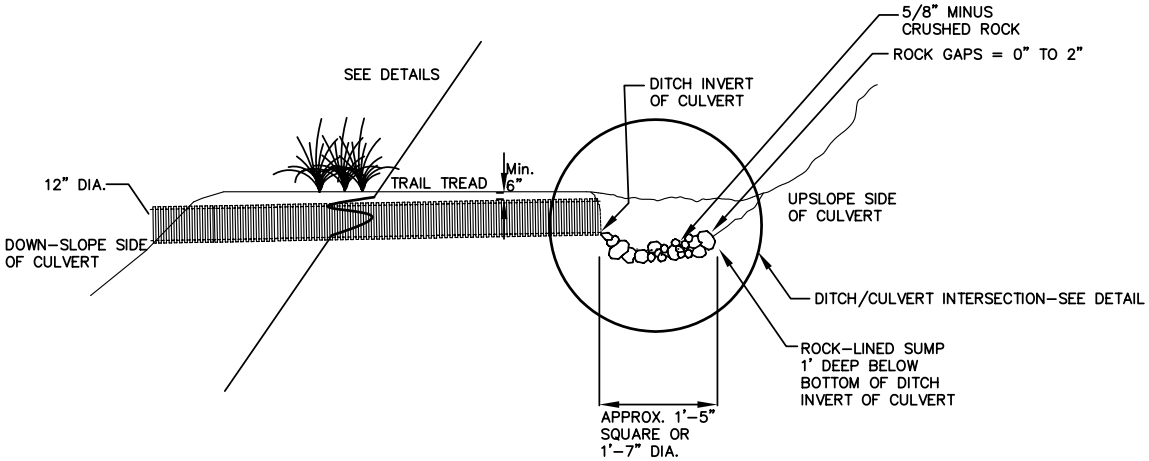

SECTION B-B

City of Seattle Department of Parks & Recreation	**ROCK LINED SUMP DETAILS** **STD. DETAIL NO. 32 60 00.53**