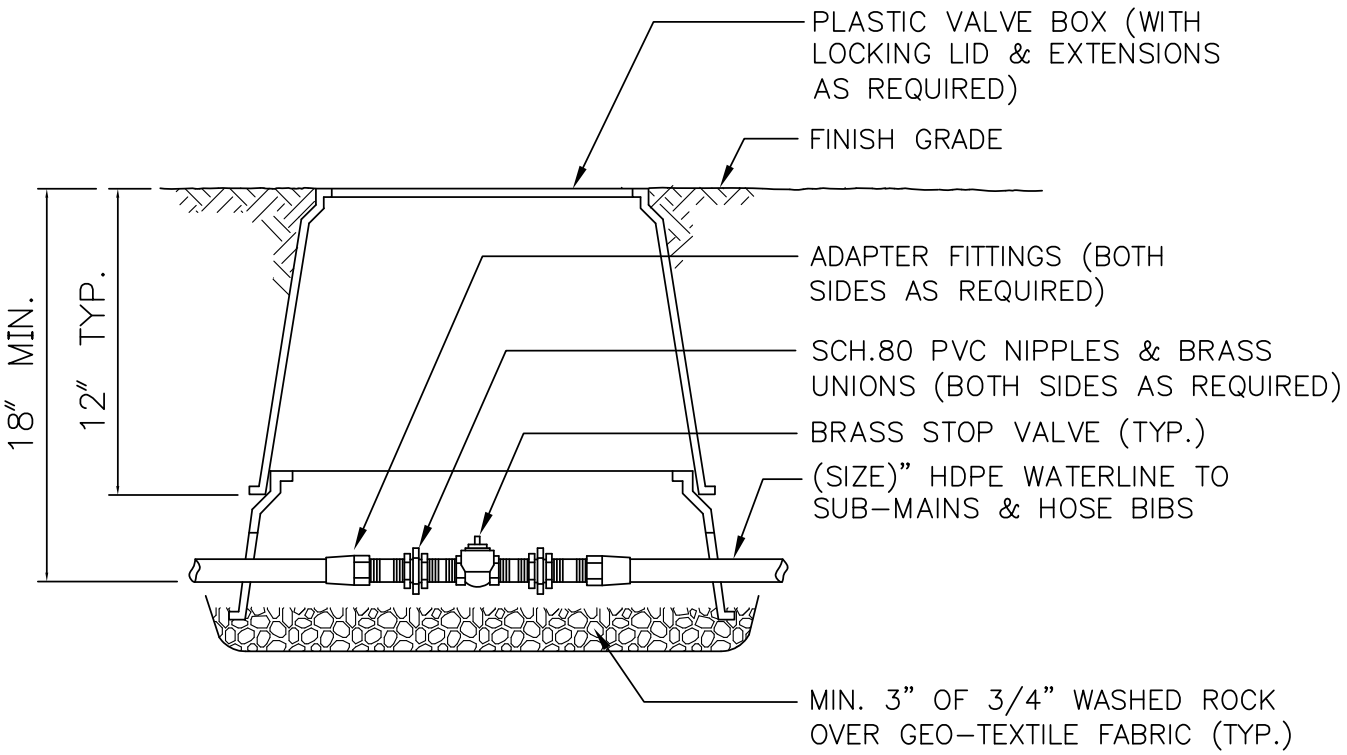

City of Seattle Department of Parks & Recreation	**P-PATCH WATER SYSTEM ISOLATION VALVE DETAILS** **STD. DETAIL NO. 33 12 16.33**