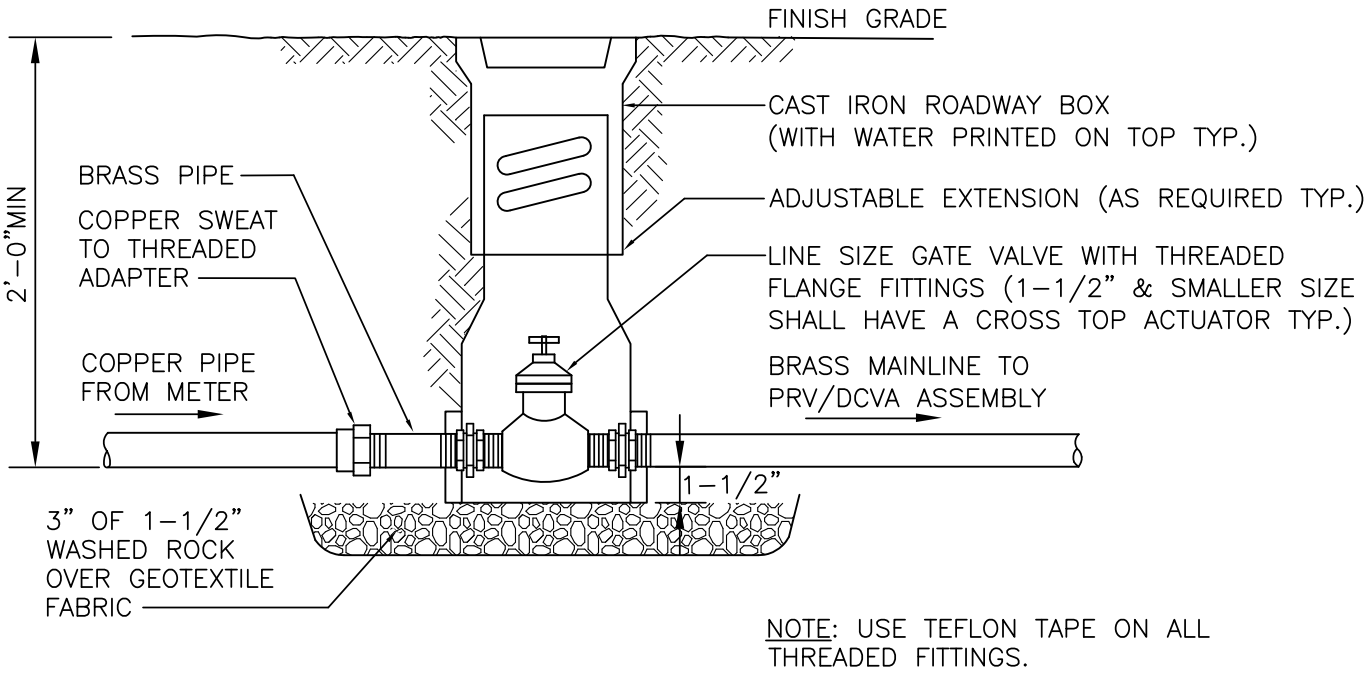

GATE VALVE (1-1/2" & SMALLER)

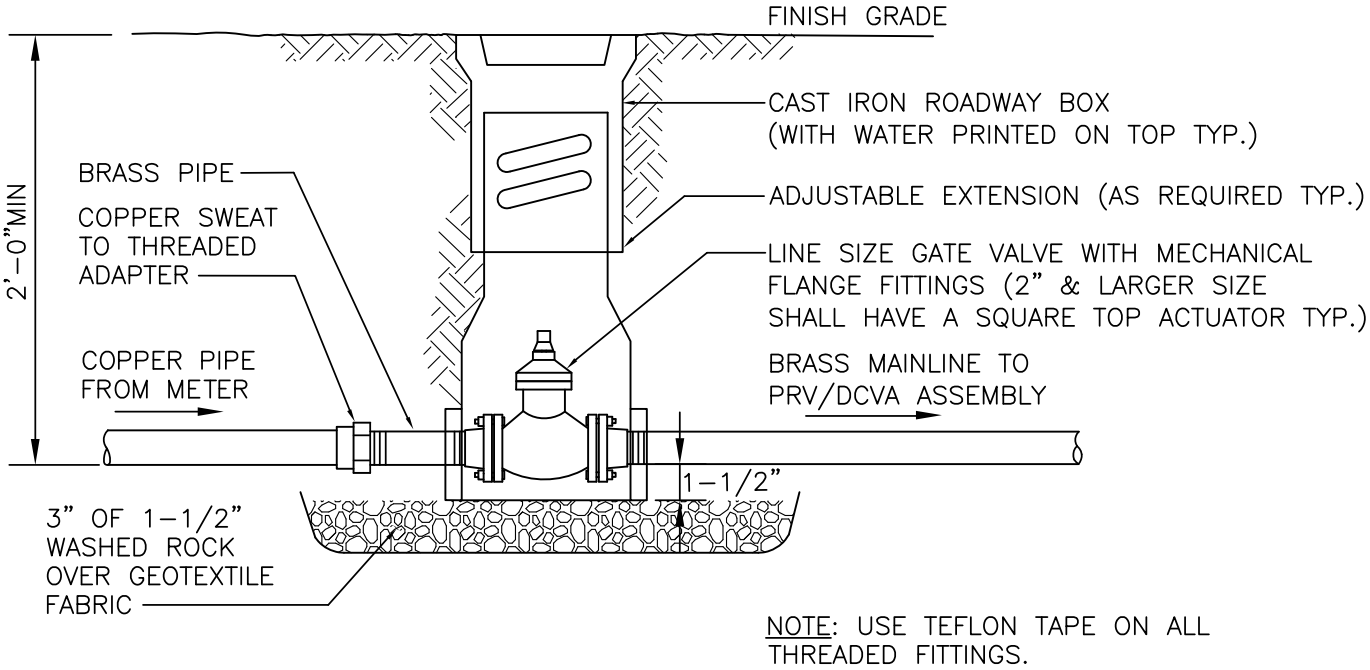

GATE VALVE (2" & LARGER)

City of Seattle Department of Parks & Recreation	**GATE VALVE DETAILS (For Copper/Brass Pipe)** **STD. DETAIL NO. 33 12 16.19**