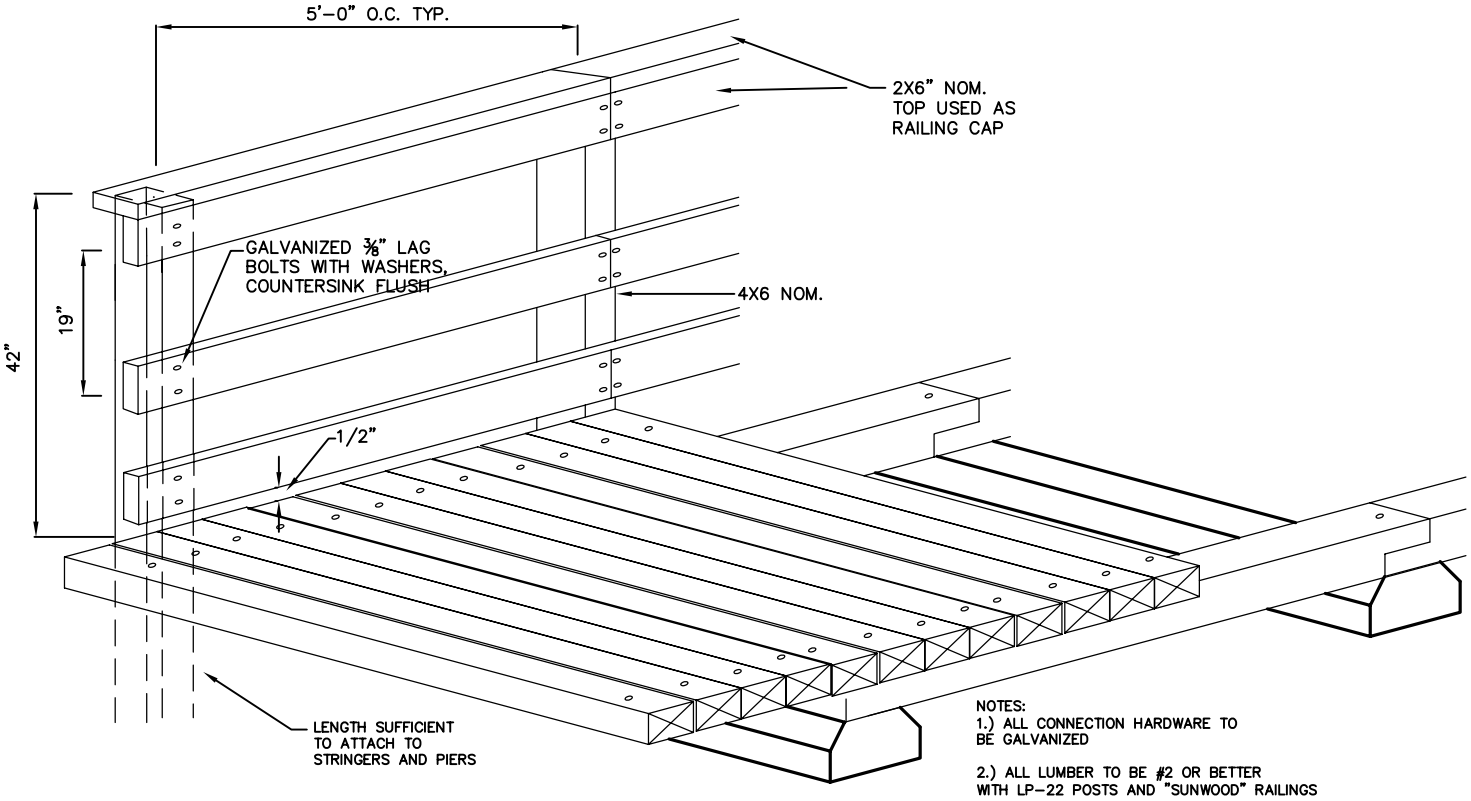

NOTES:
1.) ALL CONNECTION HARDWARE TO BE GALVANIZED

2.) ALL LUMBER TO BE #2 OR BETTER WITH LP-22 POSTS AND "SUNWOOD" RAILINGS

City of Seattle **Department of Parks & Recreation**	**WOOD BOARDWALK HANDRAIL DETAILS** **STD. DETAIL NO. 06 10 53.26**