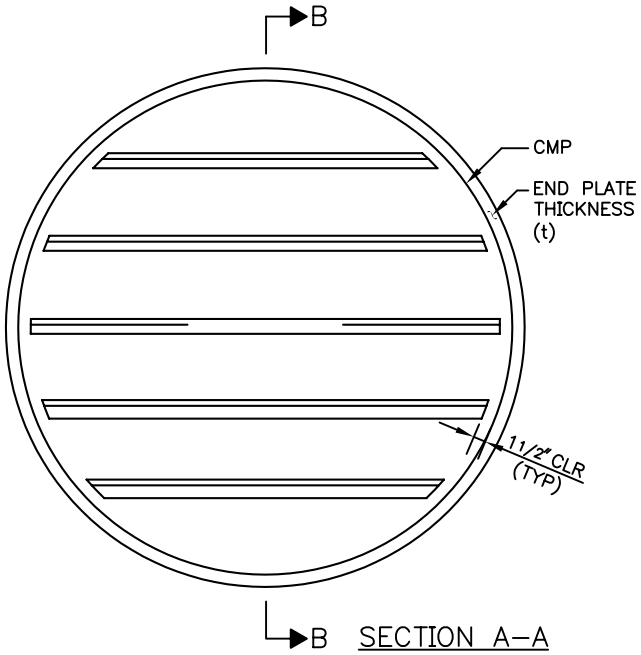

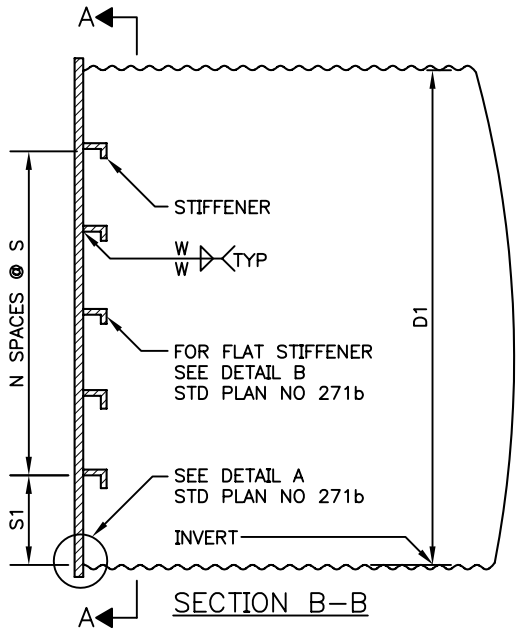

TYPE A

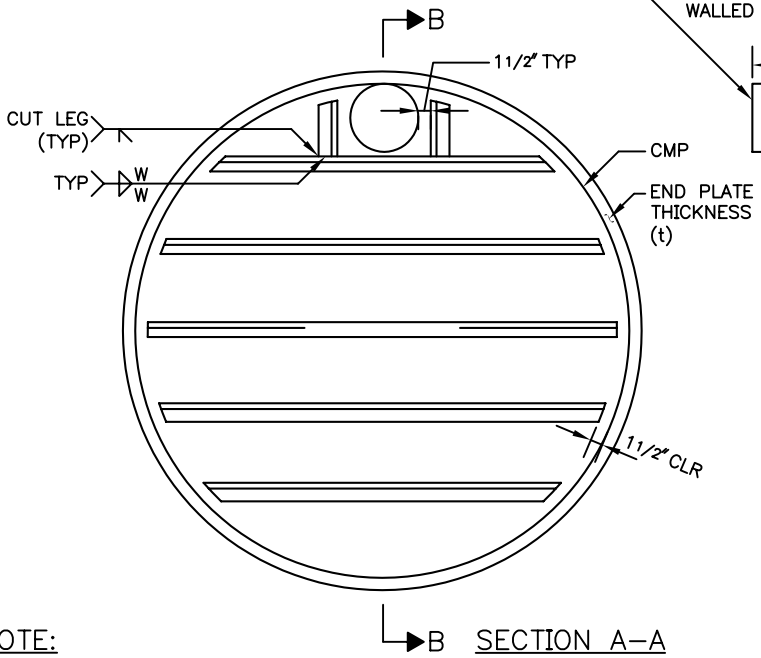

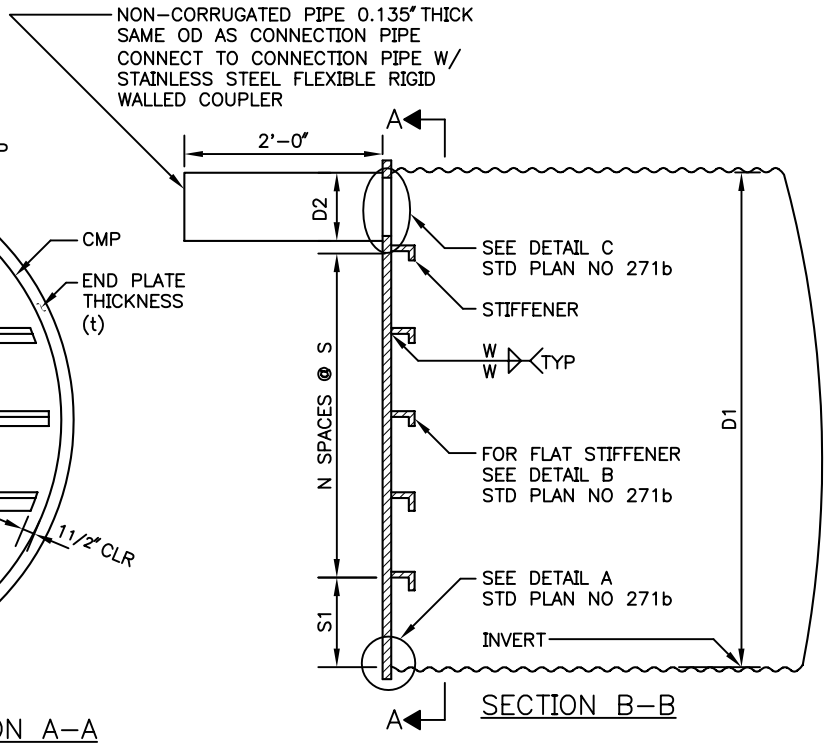

NOTE:
FOR D1, D2, t, S, S1, N & W
VALUES AND GENERAL NOTES SEE
STD PLAN NO 271c

TYPE B

City of Seattle Department of Parks & Recreation	**DETENTION STRUCTURE, END PLATE DETAIL** **STD. DETAIL NO. 33 49 23.13**