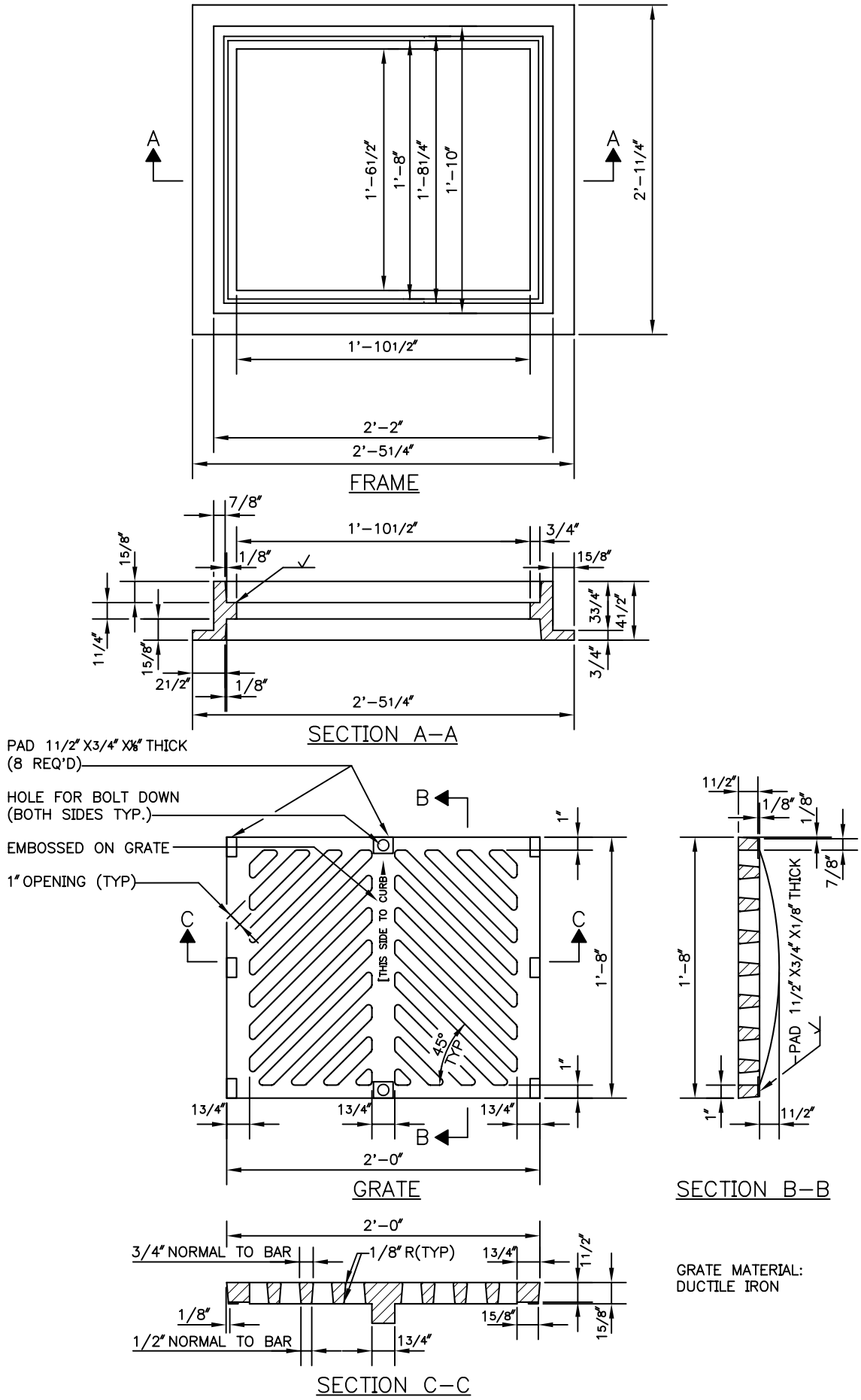

GRATE MATERIAL:
DUCTILE IRON

City of Seattle Department of Parks & Recreation	**DRAIN INLET FRAME & GRATE - TYPE 264** **STD. DETAIL NO. 33 49 16.39**