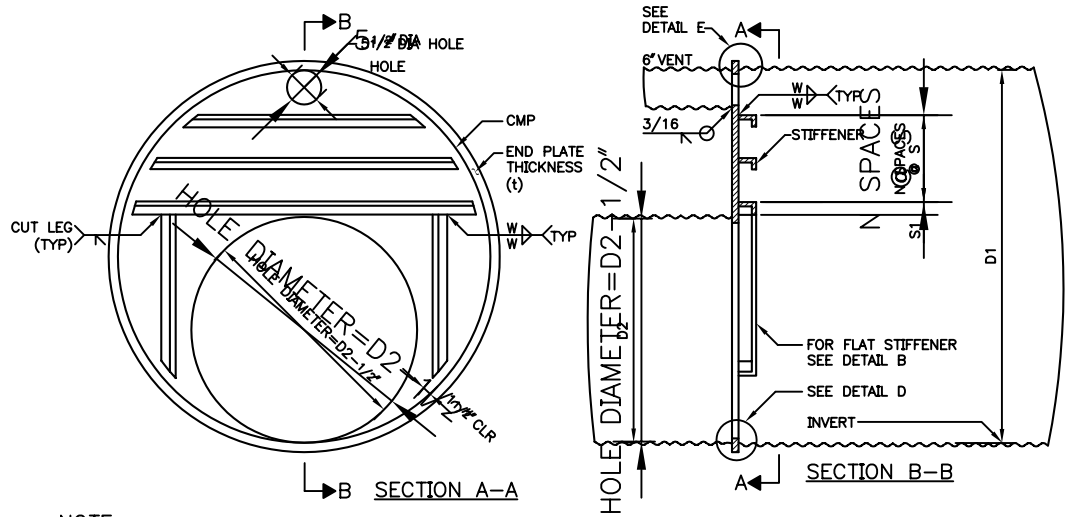

NOTE:
FOR D1, D2, t, S, S1, N & W VALUES AND GENERAL NOTES SEE STD PLAN NO 271c

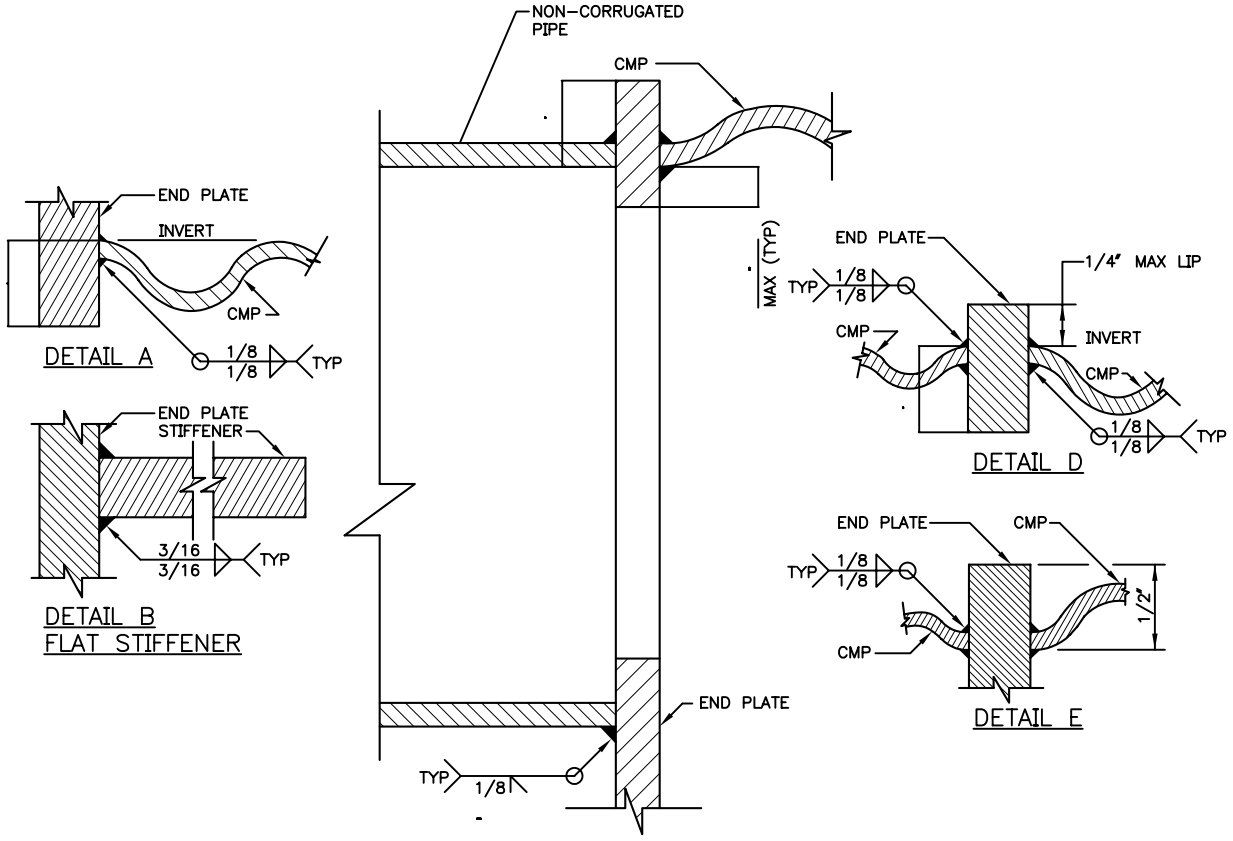

City of Seattle Department of Parks & Recreation	**DETENTION STRUCTURE - END PLATE TYPE 271b** **STD. DETAIL NO. 33 49 23.16**