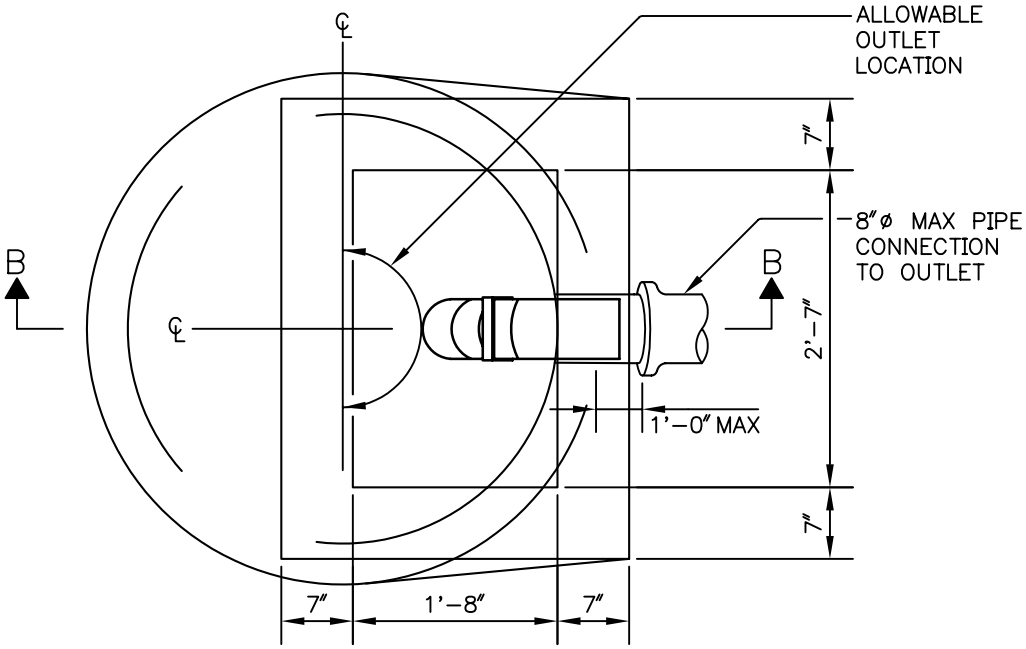

SECTION A-A

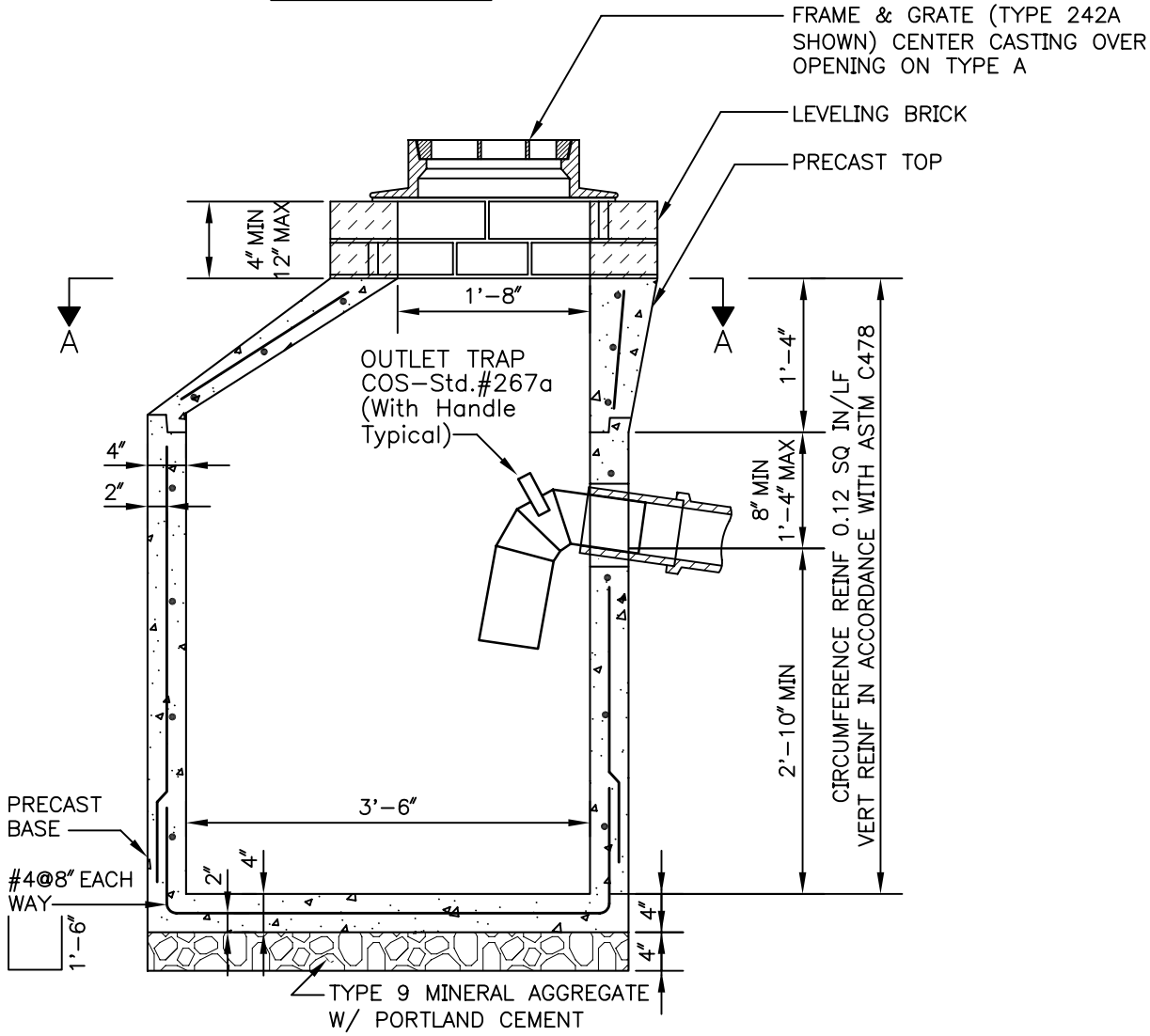

TYPE A
SECTION B-B

City of Seattle Department of Parks & Recreation	**CATCH BASIN -TYPE 242 (with SPR exceptions)** **STD. DETAIL NO. 33 49 16.23**