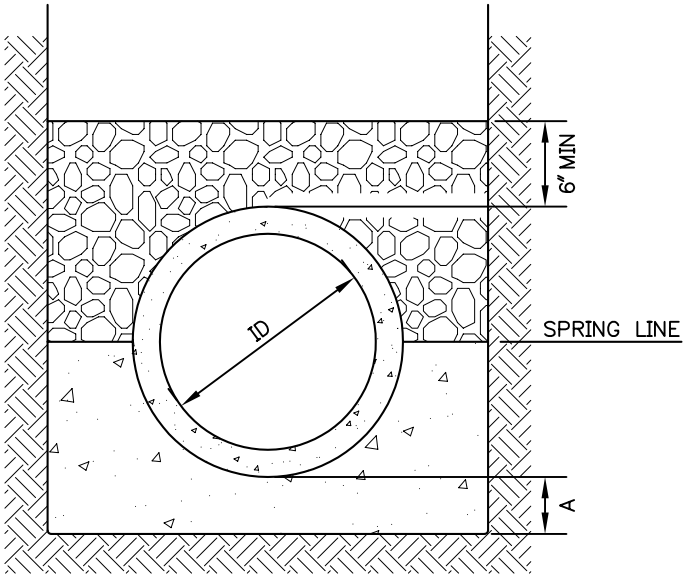

CLASS A BEDDING
(CONCRETE BEDDING)

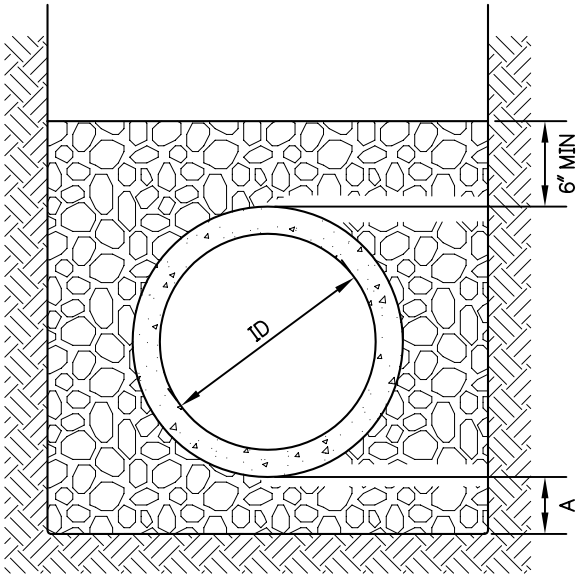

CLASS B BEDDING

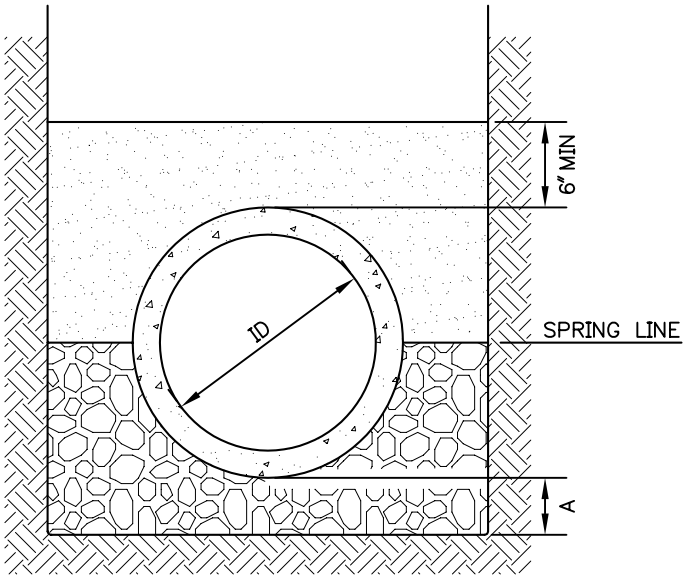

CLASS C BEDDING

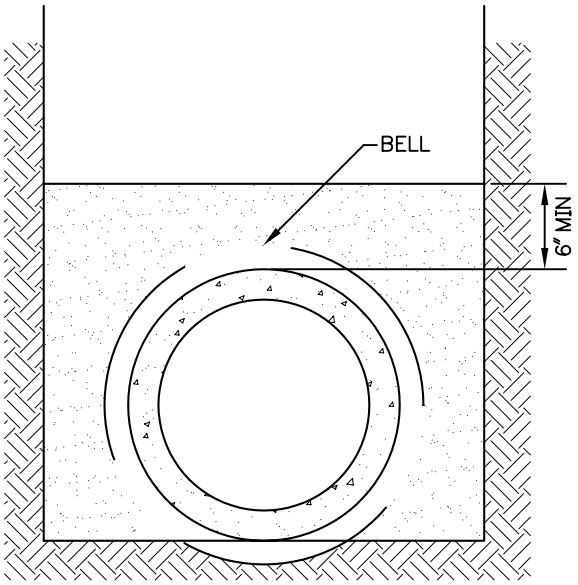

CLASS D BEDDING

MINERAL AGGREGATE FOR RIGID PIPE
TYPE 22 FOR FLEXIBLE PIPE

CONCRETE
(4 SACK MIN 1-$\frac{1}{2}$" MAX. AGGREGATE)

APPROVED NATIVE MATERIAL

NOTES:

1. FOR TRENCH MAX. PAY WIDTH
   A=4" WHEN ID IS LESS THAN 2'-6"
   A=6" WHEN ID IS 2'-6" OR MORE
3. FOR CLASS D BEDDING EXCAVATE FOR BELL

City of Seattle Department of Parks & Recreation	**TYPICAL PIPE BEDDING SECTIONS** **STD. DETAIL NO. 02720.79**