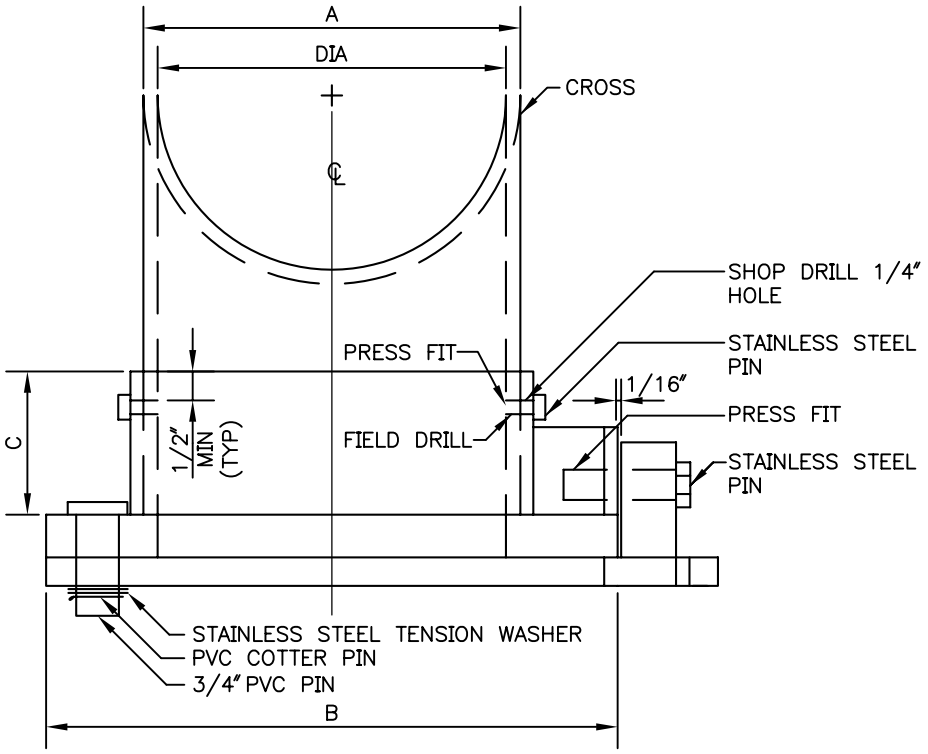

TOP VIEW

DIA	A	B*	C*
4″	4 1/2″	8″	2″
6″	6 5/8″	10″	2 1/2″
8″	8 5/8″	12″	3″
10″	10 3/4″	14″	3″
12″	12 3/4″	16″	3″

*MINIMUM

DIA=OUTLET PIPE DIAMETER

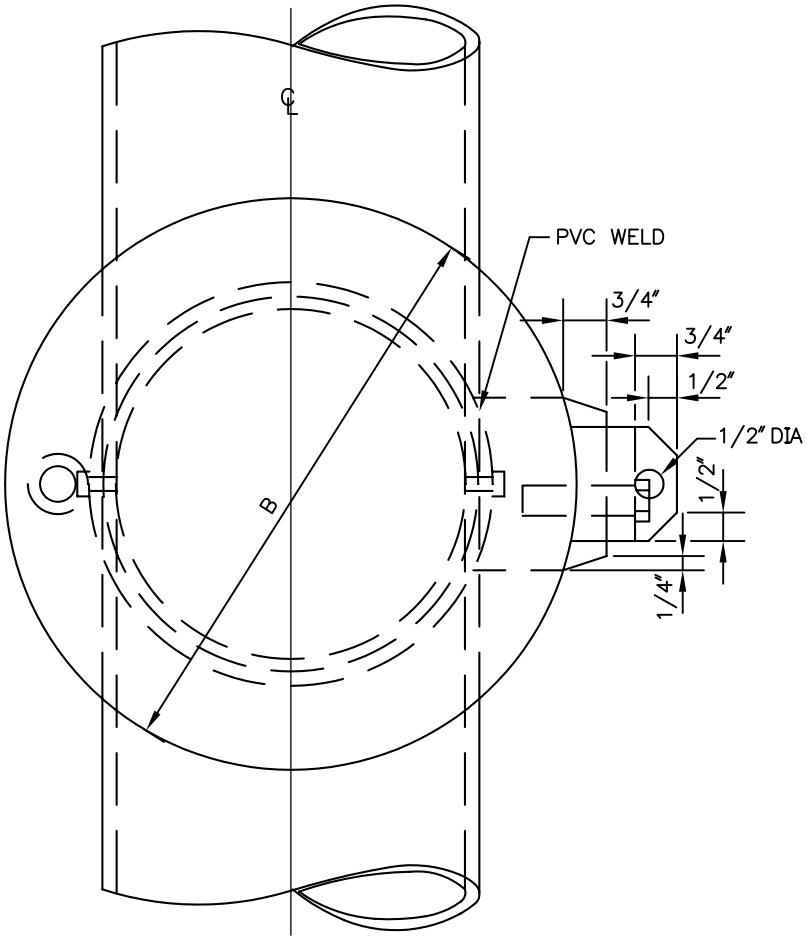

FRONT VIEW

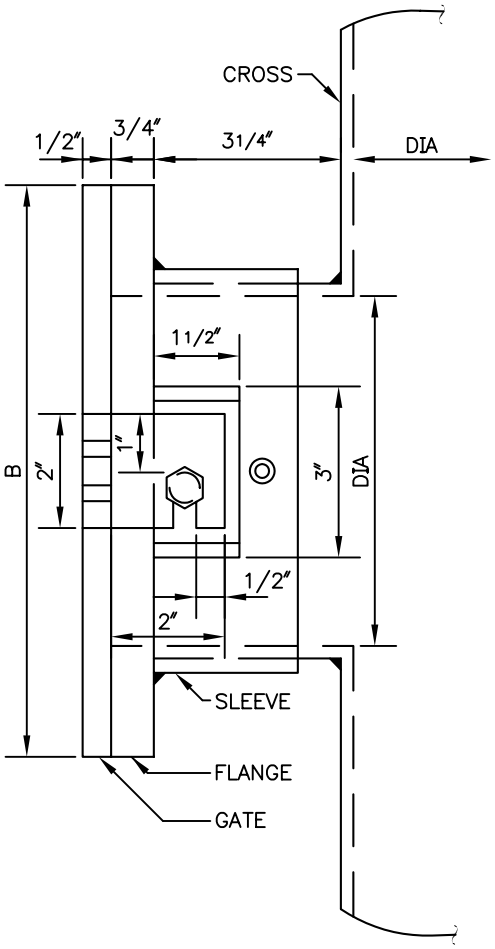

SIDE VIEW

City of Seattle Department of Parks & Recreation	**PVC SHEAR GATE DETAIL** **STD. DETAIL NO. 33 49 23.26**