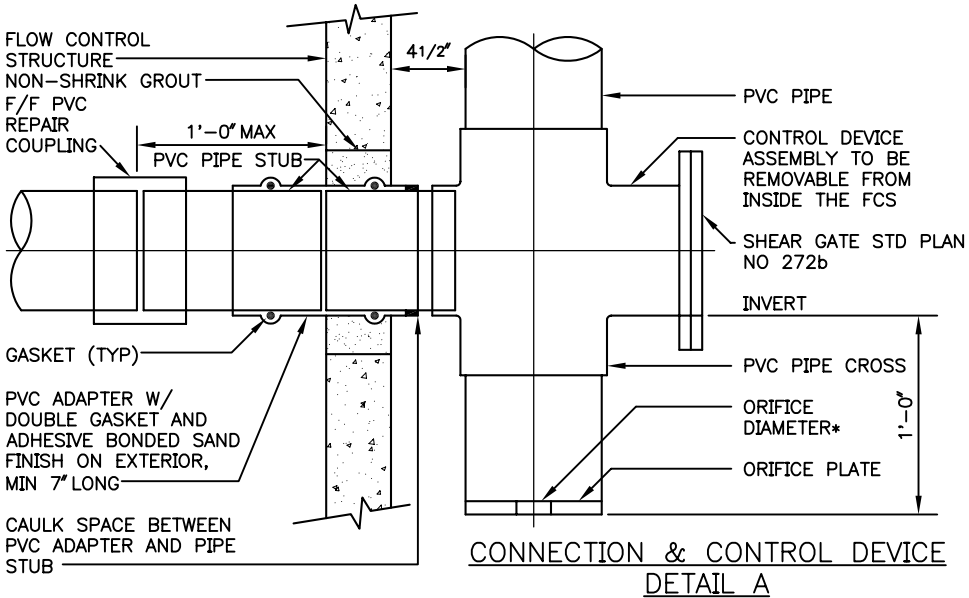

CONNECTION & CONTROL DEVICE
DETAIL A

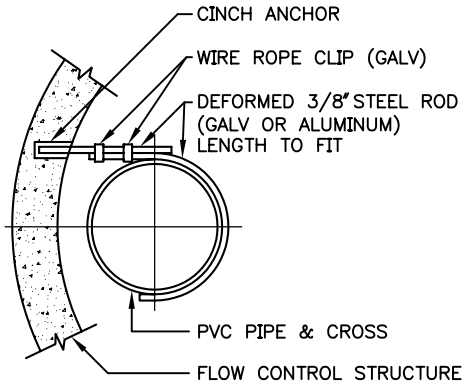

PIPE SUPPORT
DETAIL B

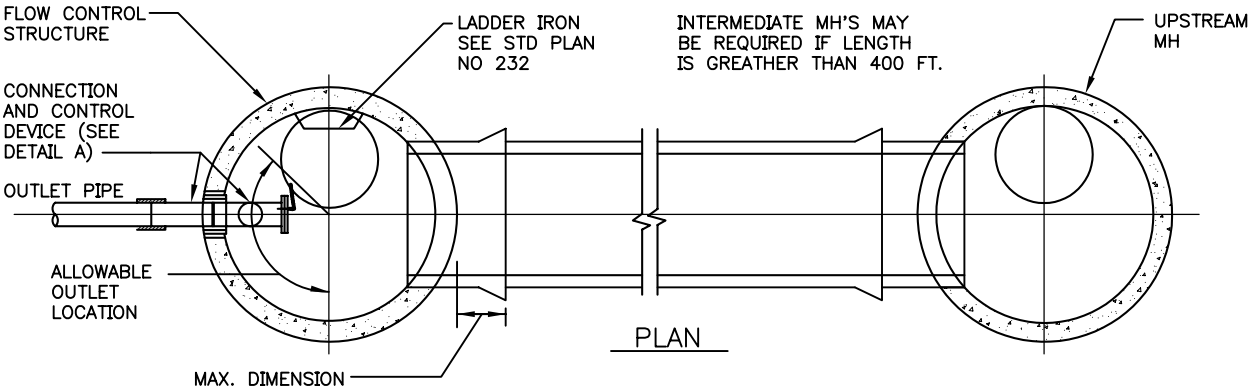

PLAN

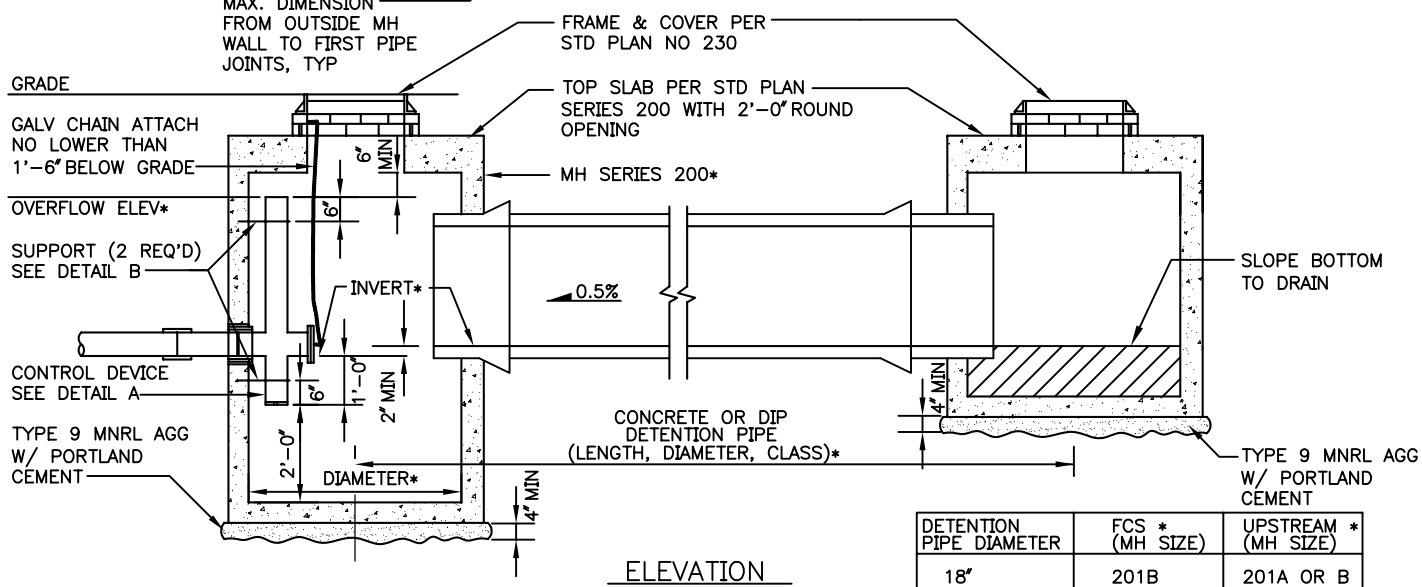

ELEVATION

DETENTION PIPE DIAMETER	FCS * (MH SIZE)	UPSTREAM * (MH SIZE)
18"	201B	201A OR B
24"	201B	201A OR B
30"	202B	202B
36"	202B	202B
48"	203B	203B
60"	204B	204B
72"	205B	205B

*SPECIFIC DESIGN INFORMATION AS INDICATED ON CONSTRUCTION DRAWINGS

FLOW CONTROL STRUCTURE & DETENTION PIPE

City of Seattle
Department of Parks & Recreation

FLOW CONTROL STRUCTURE (CONC. or DIP)

STD. DETAIL NO. 33 49 23.23