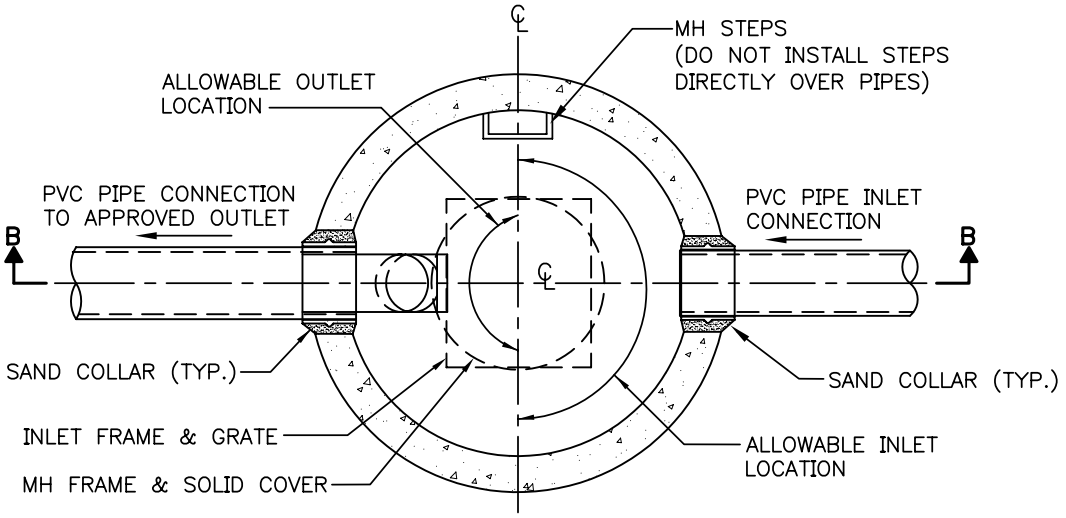

SECTION A–A

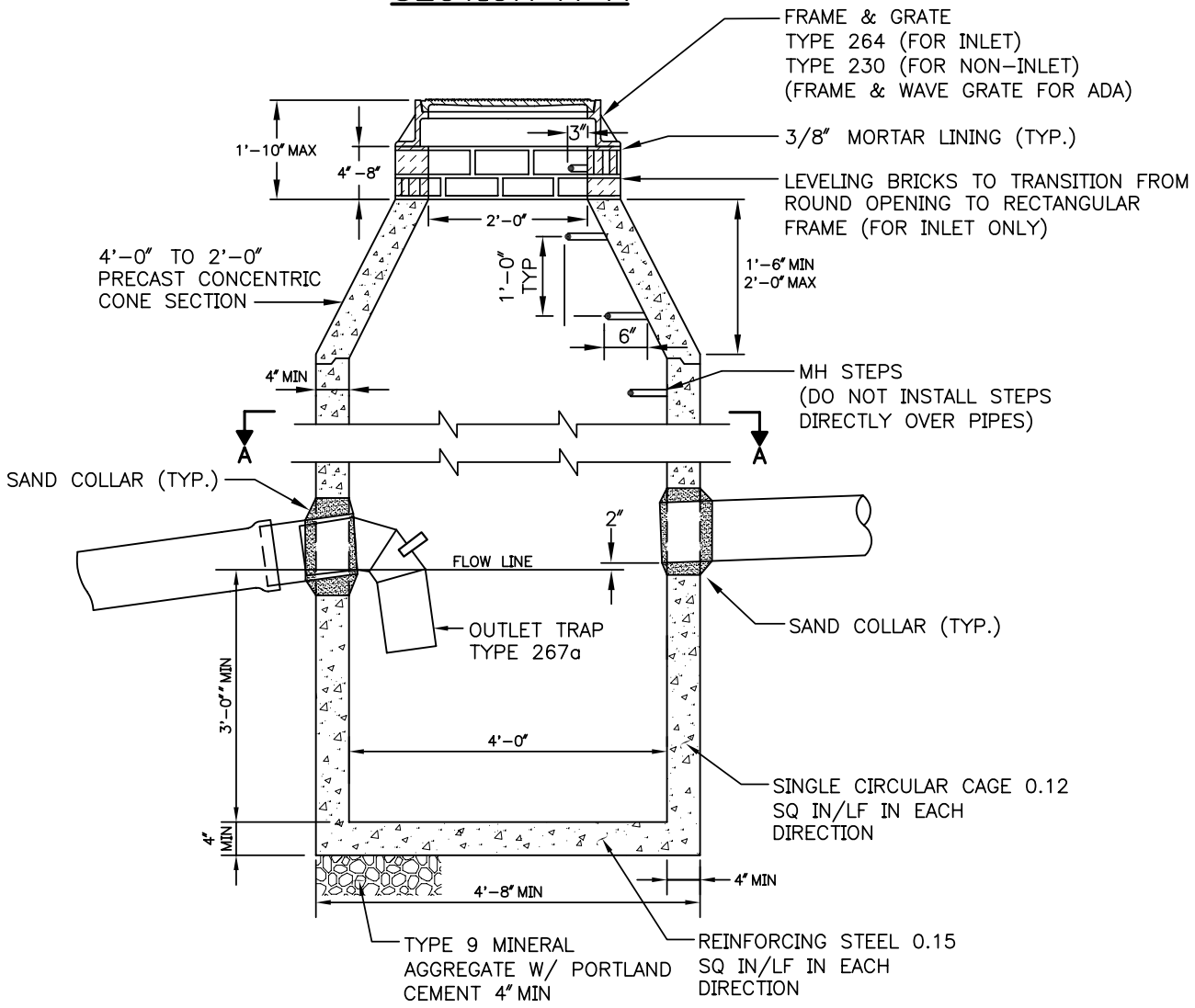

SECTION B–B

City of Seattle Department of Parks & Recreation	**CB TYPE 240 (WITH SPR EXCEPTIONS)** **STD. DETAIL NO. 33 49 16.16**