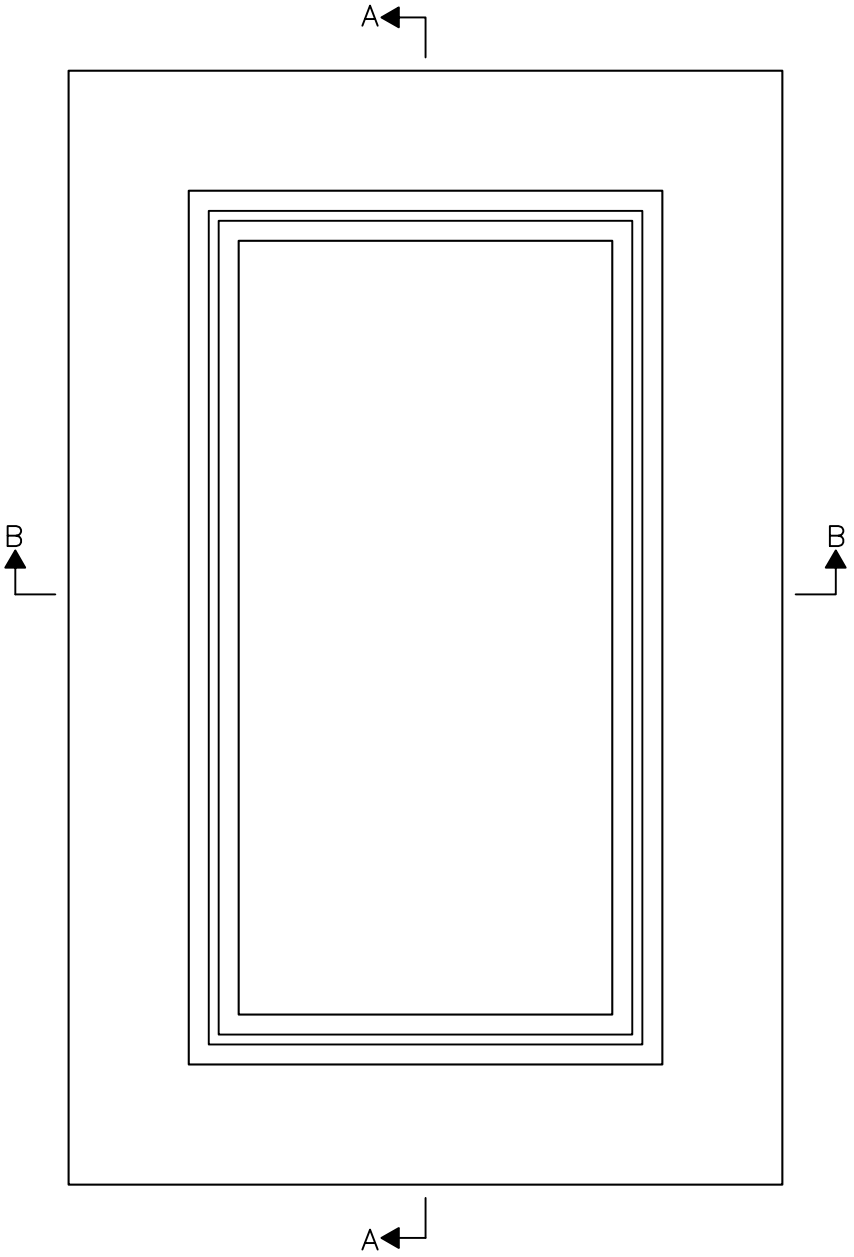

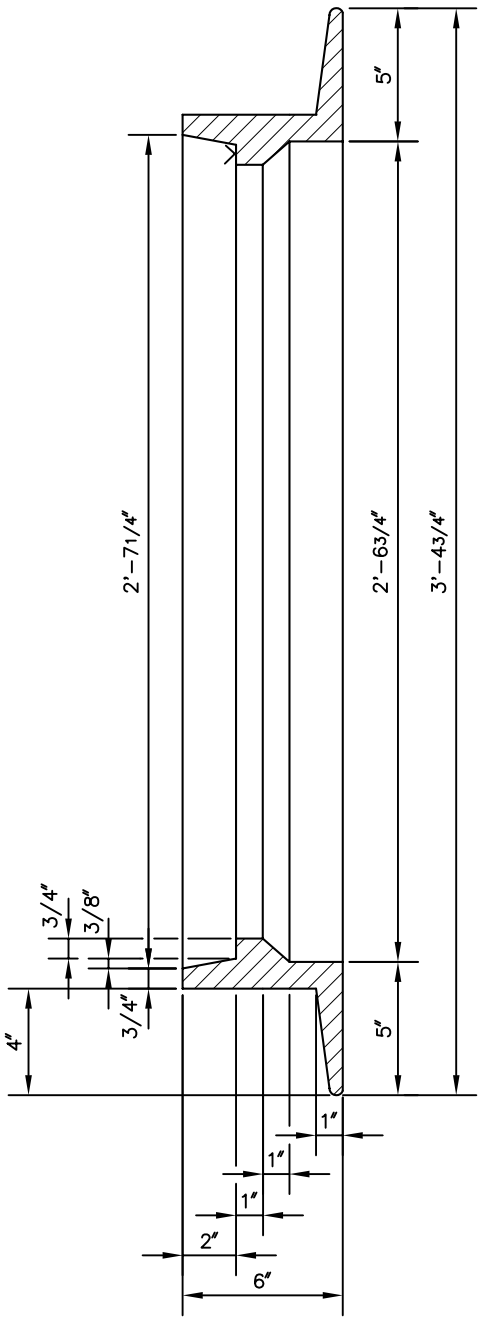

SECTION A–A

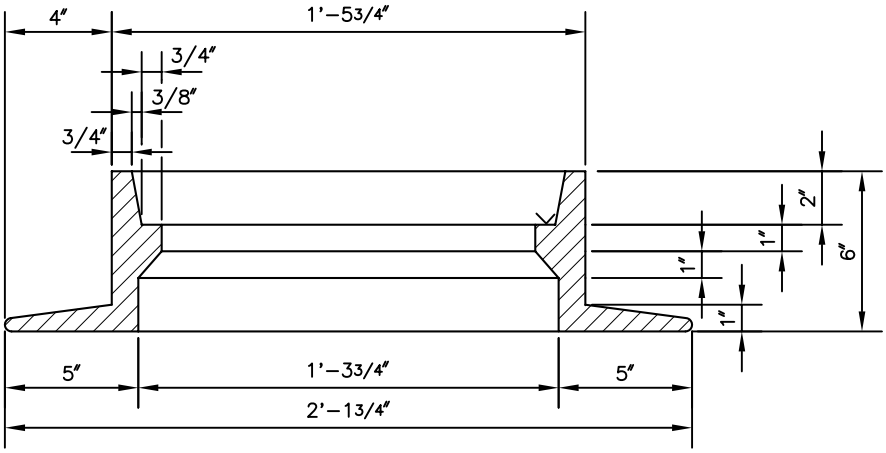

SECTION B–B

City of Seattle Department of Parks & Recreation	**DRAIN INLET FRAME -TYPE 262** **STD. DETAIL NO. 02720.64**