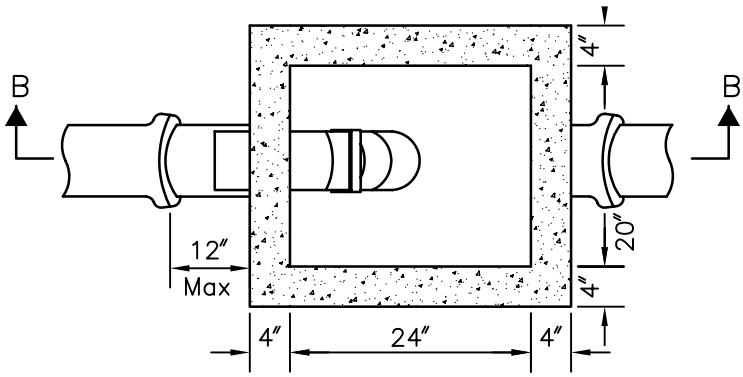

Section A–A

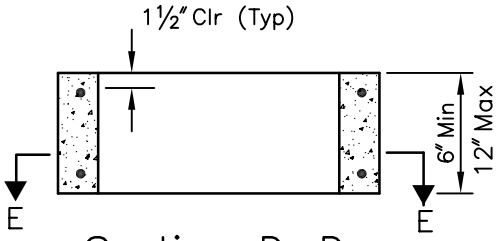

Section D–D

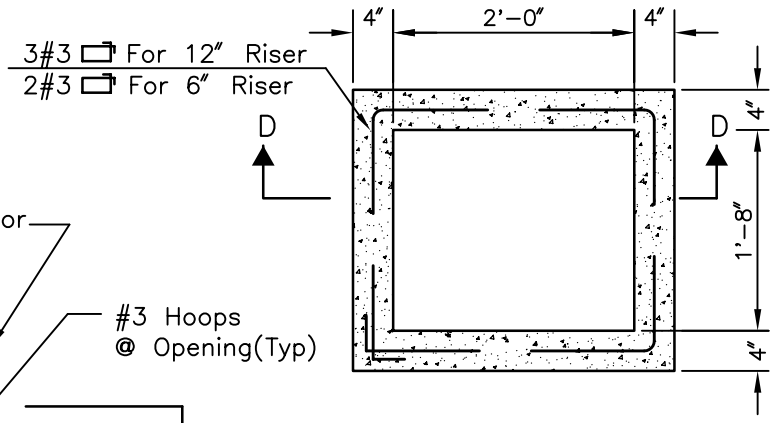

Section E–E

Precast Riser Reinforcing

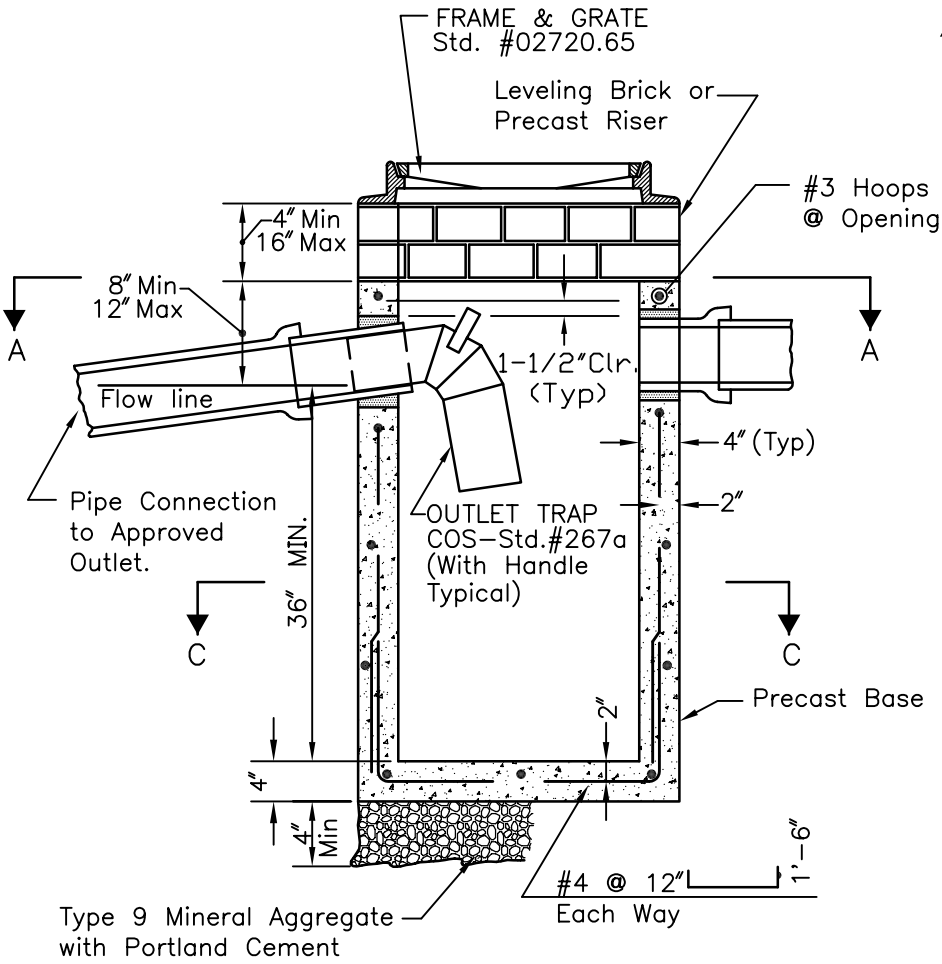

Section B–B

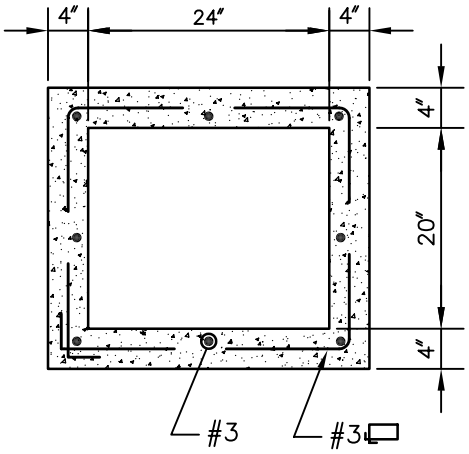

Section C–C

City of Seattle
Department of Parks & Recreation

CATCH BASIN - TYPE 241

STD. DETAIL NO. **02720.59**