Custom Logo Covers Promote Your Identity

East Jordan Iron Works, Inc. manufactures custom logo covers for many municipalities and corporations across the USA. These customized covers feature a slogan, logo, mascot or a prominent characteristic, plus special lettering that names the city or corporation and the type of structure beneath the cover. It can also feature a no dumping message such as "PROTECT YOUR ENVIROMENT DISCHARGE NO WASTE". Call us today for a customized classic cover adapted to your specifications.

Stormwater Management Products

EJIW offers a variety of products to assist municipalities and organizations in gaining Phase II compliance through the use of Best Management Practices (BMPs). The United States EPA, Office of Waste Water Management, defines BMPs as "schedules of activities, prohibitions of practices, maintenance procedures, and other management practices designed to prevent or reduce the pollution of the waters of the United States."

As a Best Management Practice EJIW offers a wide range of cast iron catch basins, grates, and inlet covers permanently cast with a fish emblem and "OUTFALL TO STREAM … DUMP NO POLLUTANTS" message. EJIW castings are an effective, low cost means to discourage illicit dumping. Unlike stenciled messages or other short-lived approaches, our environmentally friendly designs serve as an enduring directive against dumping.

Your existing standards can be customized with appropriate messages and images. We will work with you to provide products that build public awareness of the dangers of water pollution and its impact on your local waterways, while maintaining complete interchangeability with your installed product base. EJIW is proud to play an active role in protecting water quality.

5416 M3 Vane Grate "OUTFALL TO STREAM … DUMP NO POLLUTANTS"

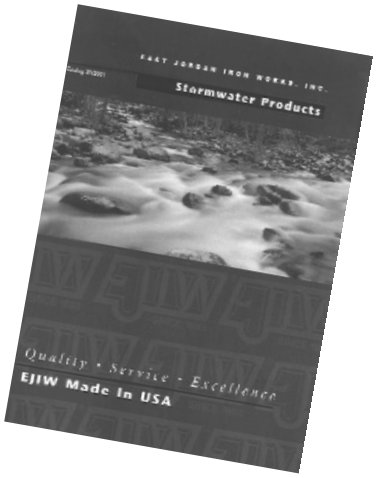

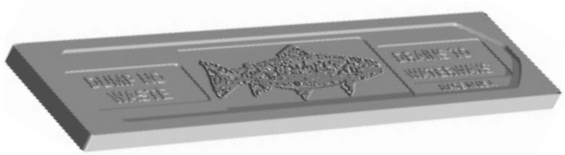

Curb Plate 7001 Cast iron curb plates are imbedded in the sidewalk concrete above a gutter inlet. It can be readily customized with the name of your local waterway and logo.

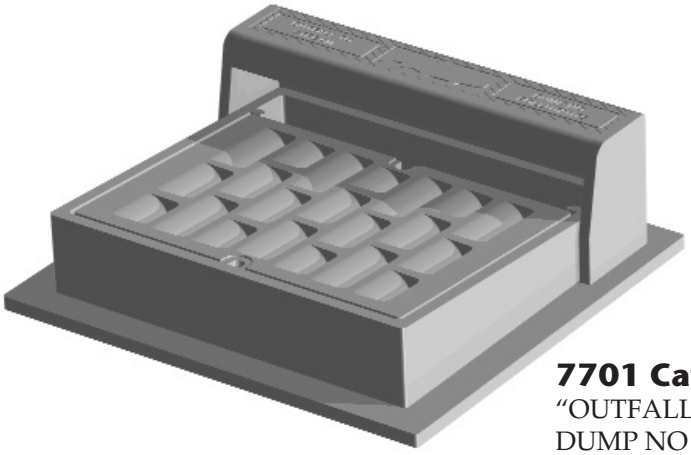

7701 Catch Basin
"OUTFALL TO STREAM … DUMP NO POLLUTANTS"

1480 Frame & Cover

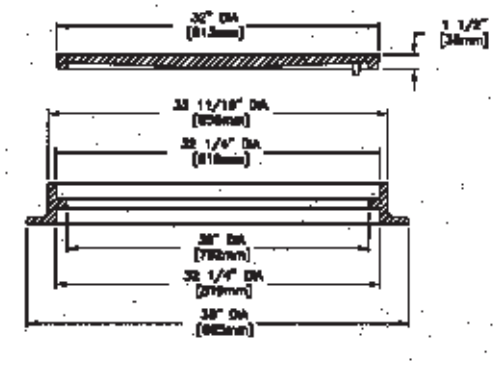

Heavy Duty
Machined Bearing Surfaces
Reversible Frame
For Slab Construction
Options:
Gasket Seal Covers
Watertite Assmbly
Heavy Duty Grate
ADA Grate

Table of Assembled Weights	
COVER TYPE	GRATE TYPE
A Solid & C Hole Vent	M Flat
370 lb.	360 lb.
168kg	163kg

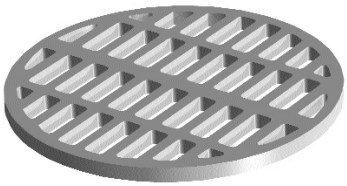

TYPE M Flat Grate 1320
Approx 360 sq. in (2322 sq. cm) of opening

1581 Frame & Cover

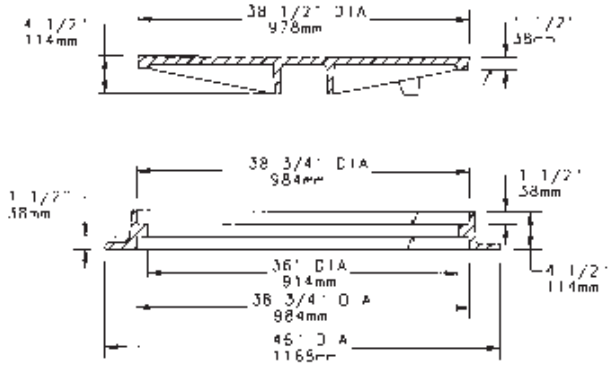

Heavy Duty
Machined Bearing Surfaces
Reversible Frame - 2815
Use top flange for slab construction
Options:
Special Lettered Covers
Heavy Duty DI Cover
Grates
ADA Grate
Outer Cover
Ductile Iron Covers
Watertite Assembly

Table of Assembled Weights			
COVER TYPE			GRATE TYPE
A Heavy Duty	A Light Duty	*E Ring Cover	M Flat
625 lb.	470 lb.	640 lb.	655 lb.
284kg	214kg	291kg	298kg

*Use with 1040 Cover

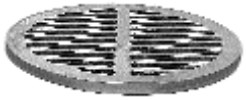

TYPE M Flat Grate - Approx. 468 sq. in. (3019 sq. cm) of opening

TYPE E Outer Cover with 23 11/16 dia. opening

V-1600-4 Frame & Cover

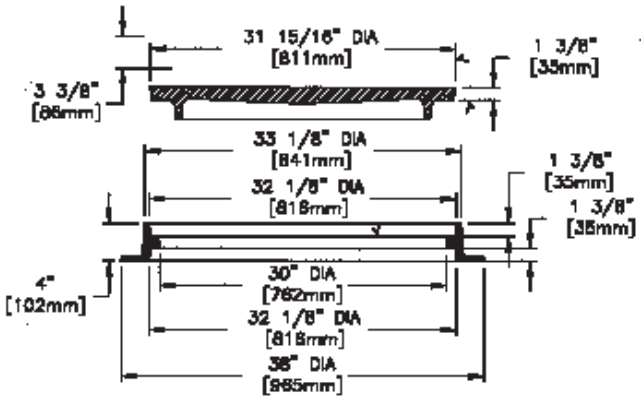

Heavy Duty
Machined Bearing Surfaces
Reversible Frame
Uses 1810A2 Covers
430 pounds (195kg) total weight
Options:
Special Lettered Covers
Bolted Assembly
Adjusting Rings
Grate - V3600-4

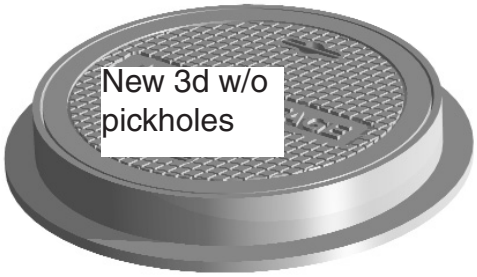

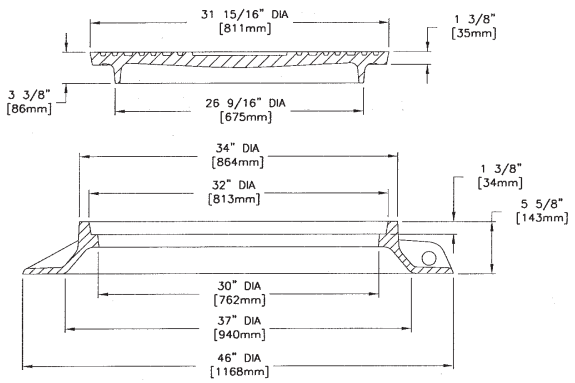

1820 Frame & Cover

Ref: SB-30

Heavy Duty
Machined Bearing Surfaces
Uses 1810A2 Covers
582 pounds (265kg) total weight
Options:
Special Lettered Covers
Solid or Vented
Adjusting Rings

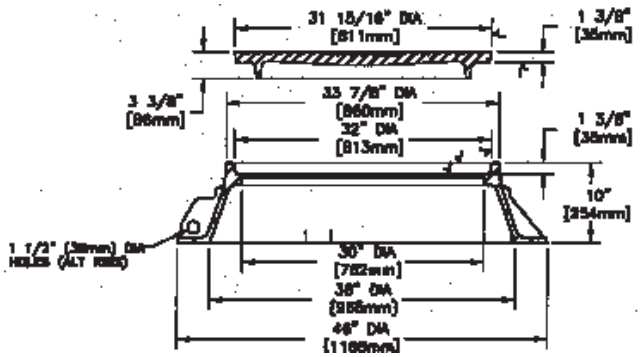

1825 Frame & Cover

Ref: S-30

Heavy Duty
Machined Horizontal and Vertical Bearing Surfaces
Uses 1810A2 Covers
650 pounds (295kg) total weight
Options:
Special Lettered Covers
Gasket Seal Covers
G30 & H30 Covers
Watertite Assembly
Cam Lock Assembly
Adjusting Rings

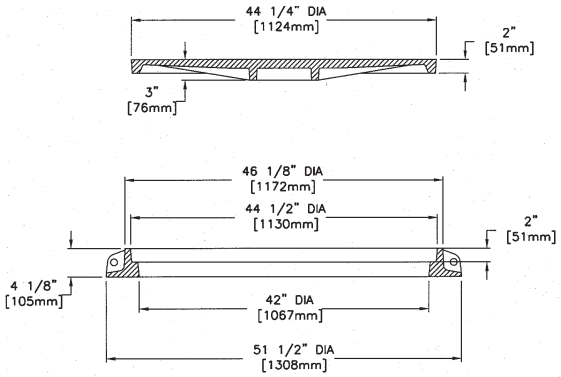

1843 Frame & Cover

Ref: 4x42

Heavy Duty
Bottom and Top Flange Frames
Ductile Iron Covers
Options:
Special Lettered Covers
Bolted Assembly (Locking)
Watertite Assembly
Stackable Nesting Frame
8 1/2" Frame Height Available
Ductile Iron Grates - ADA
Airport Rated Cover - 1845

FRAME TYPE	COVER TYPE					GRATE TYPE	
	A	APT	B1 Vented	C	Airport	M1	M2 ADA
Heavy	1145 lb. 520kg	1100 lb. 500kg	1070 lb. 486kg	1080 lb. 491kg	1255 lb. 570kg	1110 lb. 505kg	915 lb. 416kg
Bottom Flange	795 lb. 361kg	750 lb. 341kg	720 lb. 372kg	730 lb. 332kg	905 lb. 411kg	760 lb. 345kg	565 lb. 257kg
Top Flange	870 lb. 395kg	825 lb. 375kg	795 lb. 361kg	805 lb. 366kg	980 lb. 445kg	835 lb. 380kg	640 lb. 291kg

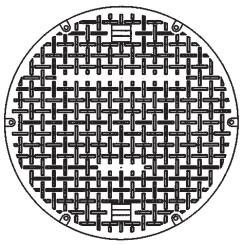

1843APT COVER

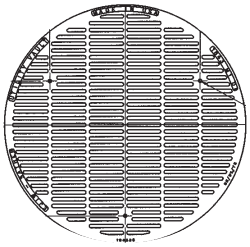

TYPE M1 Grate
Approx. 639 sq. in.
(4122 sq. cm) of opening

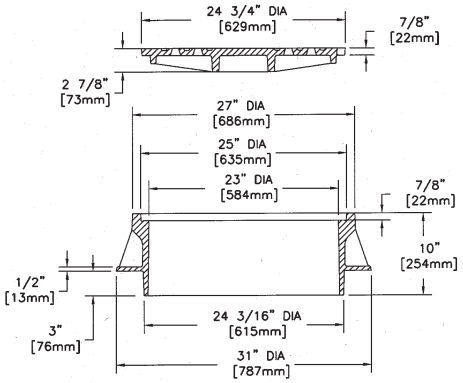

2603 Frame & Cover

Heavy Duty

Machined Bearing Surfaces

380 pounds
(173kg) total weight

Options:

Solid or Vented Covers

Grate

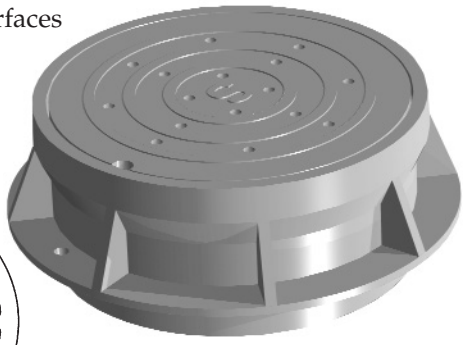

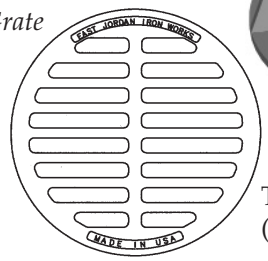

TYPE M Grate - Approx. 185 sq. in.
(1193 sq cm) of opening

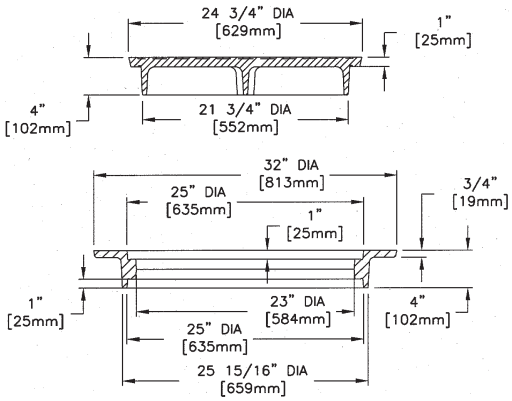

3020 Frame & Cover

Heavy Duty

Machined Bearing Surfaces

Reversible Frame

Uses 1600 Covers
& Grates

300 pounds
(136kg) total weight

Options:

Solid or Vented Covers

Special Lettering

Grate - GI & DI

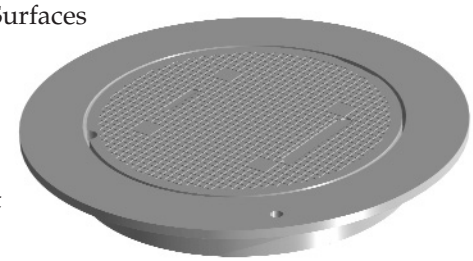

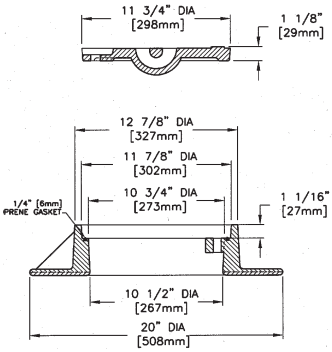

3660 Lamphole Frame & Cover

Heavy Duty

85 pounds (39kg) total weight

Options:

Special Lettered Covers

Bolted Assembly

Watertite Assembly

Adjusting Rings

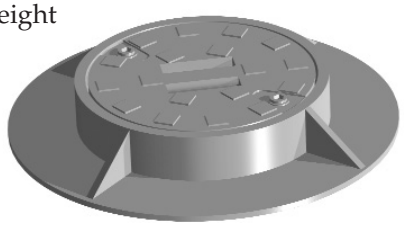

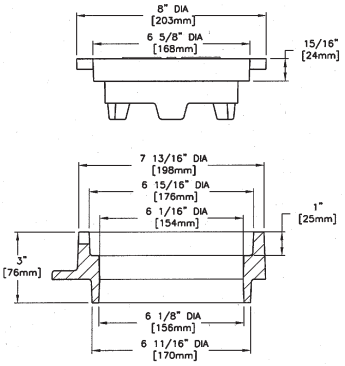

3669 Lamphole Frame & Cover

Heavy Duty

25 pounds (11kg) total weight

Options:

Special Lettered Covers

Watertite Assembly

Adjusting Rings

1″, 1½″, 2″

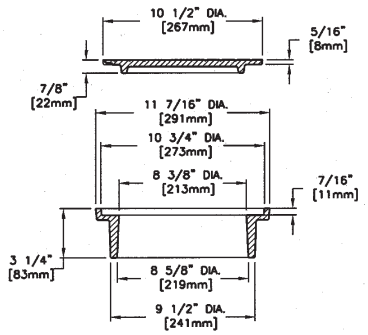

3670 Oilline Frame & Cover

Non-Traffic
22 pounds (10kg) total weight
Options:
Ductile Iron Grate

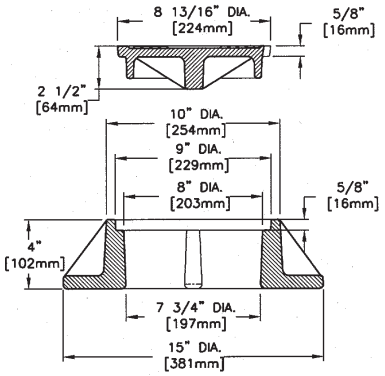

3675 Cleanout Frame & Cover Ref: #45

Heavy Duty
60 pounds (27kg) total weight
Options:
Special Lettered Covers
Watertite Assembly
Ductile Iron Grate
Adjusting Rings

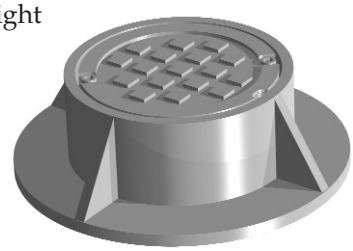

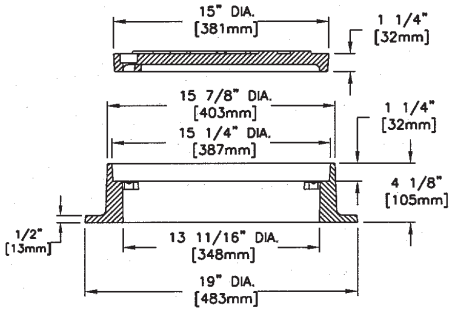

3678 Cleanout Frame & Cover Ref: 14"

Heavy Duty
95 pounds (43kg) total weight
Options:
Special Lettered Covers
Watertite Assembly

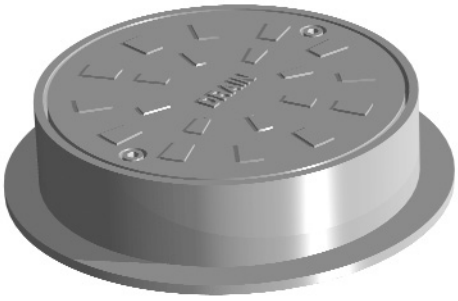

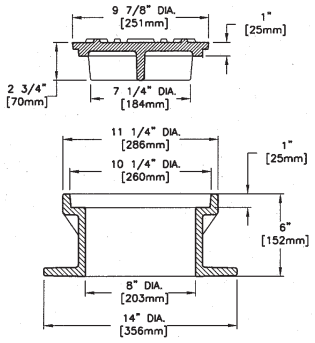

3680 APWA #19 Cleanout

Heavy Duty
60 pounds (27kg) total weight

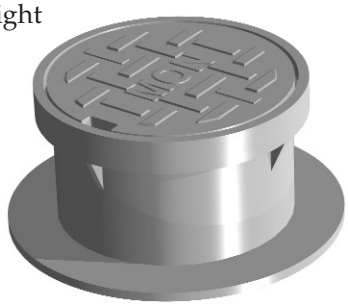

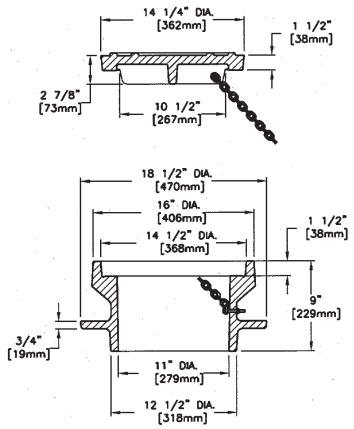

3685 Monument Box Ref: #020 MON Case

Heavy Duty

175 pounds (80kg) total weight

Assembly includes 16″ chain

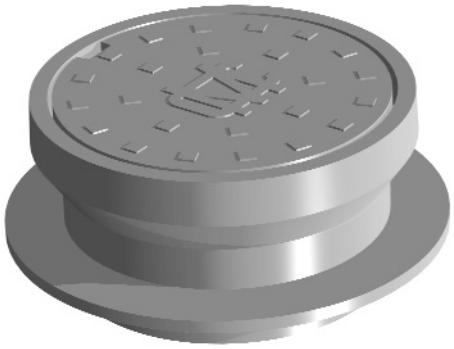

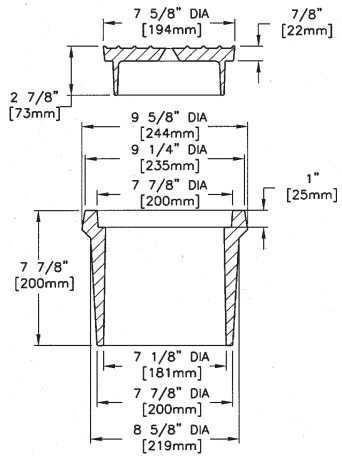

3690 Frame & Cover Ref: #2022

Heavy Duty

50 pounds (23kg) total weight

Options:

Adjusting Rings

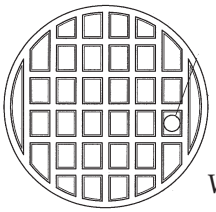

Waffle Cover

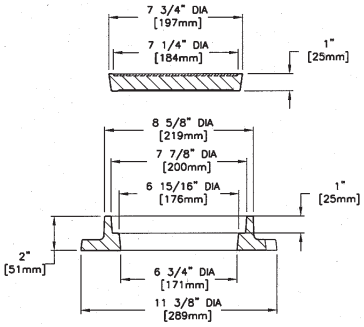

3691 Frame & Cover Ref: #2023

Heavy Duty

Uses 3690 Covers

35 pounds (16kg) total weight

Options:

Adjusting Rings

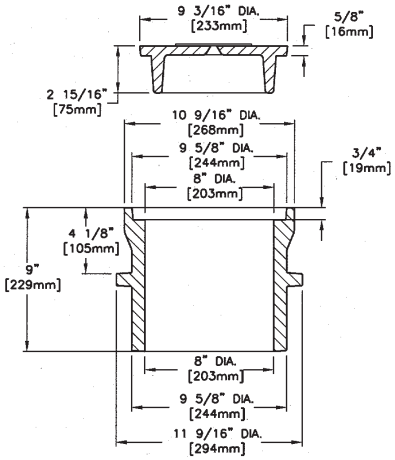

3695 Monument Box & Cover Ref: #313

Heavy Duty

Machined Bearing Surfaces

80 pounds (36kg) total weight

Options:

Special Lettered Covers

Adjusting Rings

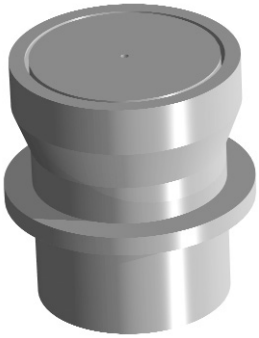

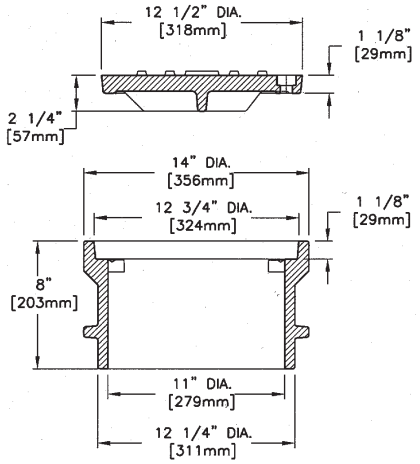

3698 Cleanout Frame & Cover

Ref: 8"x11"

Heavy Duty
Bolted Assembly
85 pounds (37kg) total weight
Options:
Special Lettered Covers

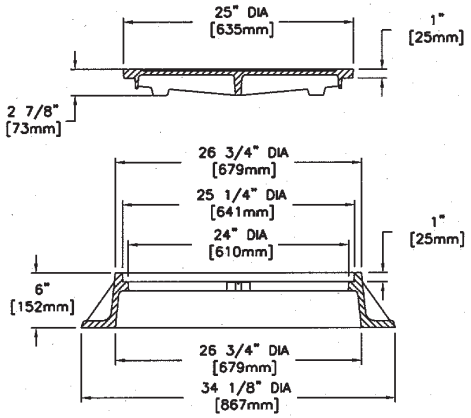

3700 Frame & Cover

Heavy Duty
Machined Bearing Surfaces
Options:
Also uses 3704, 3705 and 3706 Covers
Ductile Iron Covers
Special Lettered Covers
Logo Covers
Bolted Assembly (Locking)
Watertite Assembly
Ductile Iron Grates

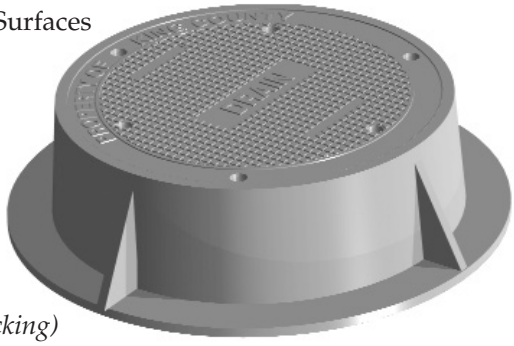

Table of Assembled Weights					
COVER TYPE				GRATE TYPE	
3700	3704	3705	3706	Flat M	Beehive O
275 lb.	330 lb.	310 lb.	300 lb.	295 lb.	260 lb.
125kg	150kg	141kg	136kg	134kg	118kg

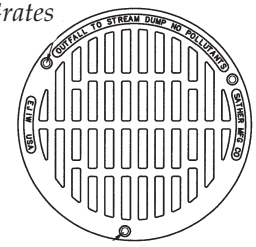

TYPE M Flat Grate

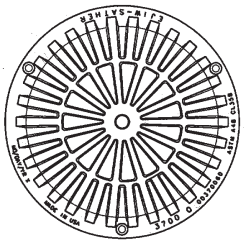

TYPE O Beehive Grate

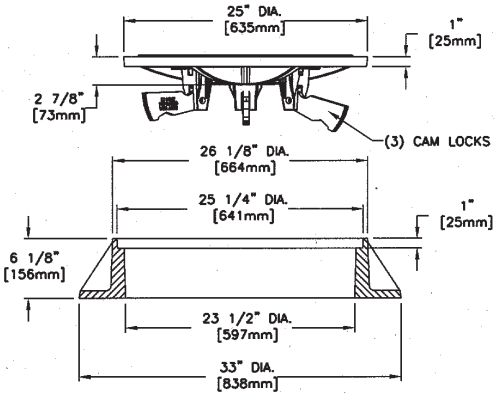

3704 Cover with Cam Lock

Heavy Duty
Machined Bearing Surfaces
Uses 3705 Frame
365 lbs. (166kg) total weight
Options:
Special Lettered Covers
Watertite Assembly
Adjusting Rings

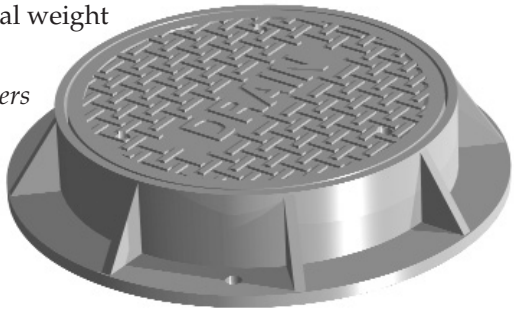

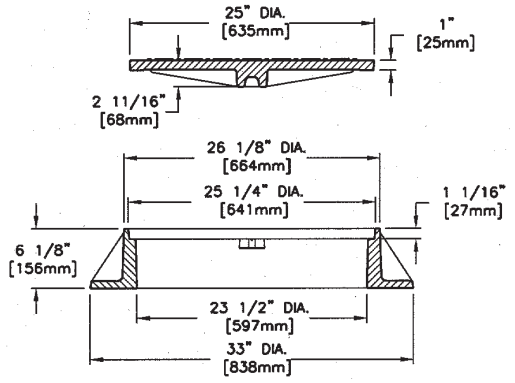

3705 Frame & Cover

Heavy Duty

Machined Bearing Surfaces

Options:

Also uses 3700, 3704 and 3706 Covers

Logo and Special Lettered Covers

Ductile Iron Covers

Ductile Iron Grates - 3700 Series

Lift Handles

Bolted Assembly (Locking)

Watertite Assembly

Adjusting Rings

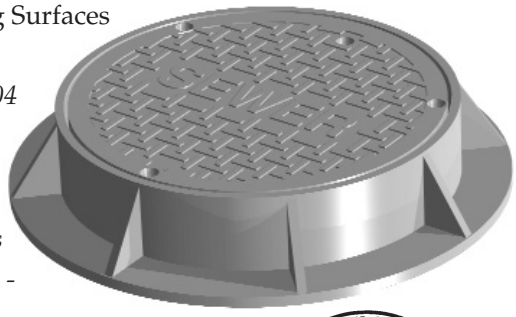

Bremerton Logo Cover

Table of Assembled Weights					
COVER TYPE				3700 GRATE TYPE	
3700	3704	3705	3706	Flat M	Beehive O
330 lb. 150kg	380 lb. 173kg	360 lb. 164kg	350 lb. 159kg	345 lb. 157kg	310 lb. 141kg

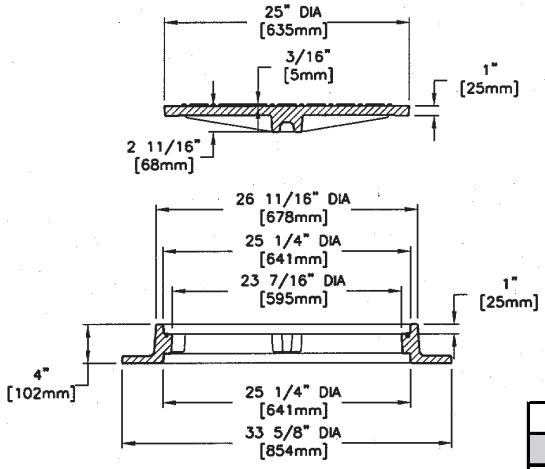

3706 Cover with Frame

Heavy Duty

Machined Bearing Surfaces

Use Cover with 3700, 3705 and 3710 Frames

Options:

Special Lettered Covers

Dutile Iron Covers

Gasket Seal

Lift Handle

Watertite Assembly

Table of Assembled Weights		
FRAME TYPE		
3700	3705	3710
300 lb. 136kg	350 lb. 159kg	295 lb. 134kg

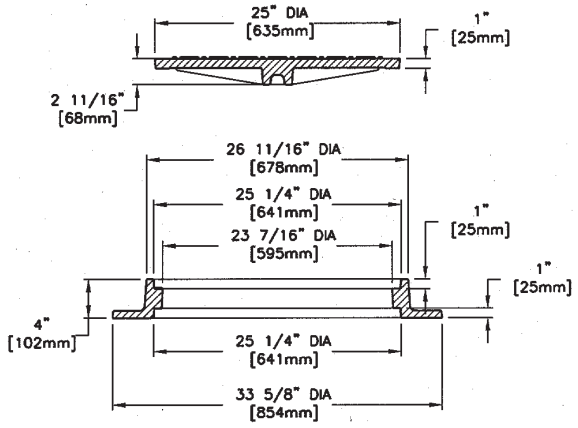

3710 Frame & Cover

Ref: 4x24

Heavy Duty

Machined Bearing Surfaces

Reversible Frame

Uses 3700, 3705 and 3706 Covers

Options:

Logo and Special Lettered Covers

Ductile Iron Covers

Lift Handle

Watertite Assembly

Gasket Seal

Adjusting Rings

Ductile Iron Grates - uses 3700 Series

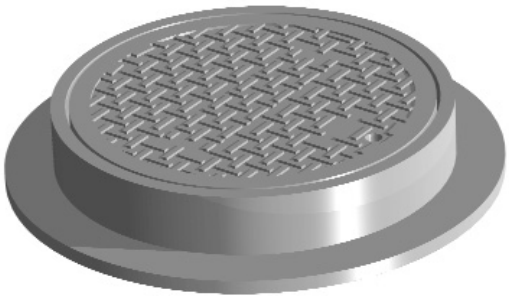

Table of Assembled Weights				
COVER TYPE			GRATE TYPE	
3700	3705	3706	Flat M	Beehive
275 lb. 125kg	305 lb. 139kg	295 lb. 134kg	299 lb. 132kg	255 lb. 116kg

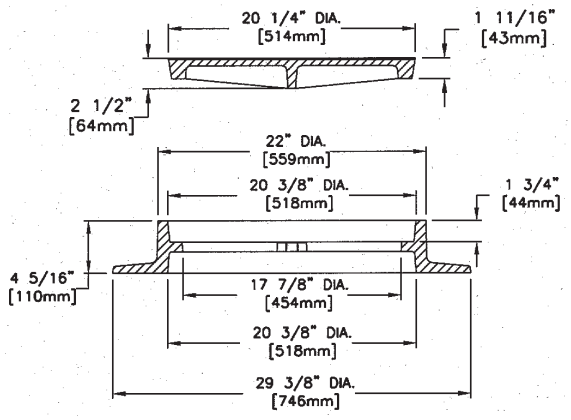

Table of Assembled Weights	
COVER	**GRATE**
225 lb.	255 lb.
102kg	116kg

3718 Frame & Cover

Ref: 4x18

Heavy Duty
Machined Bearing Surfaces
Reversible Frame
225 pounds (102kg) total weight

Options:
Special Lettered Covers
Watertite Assembly
Adjusting Rings
Grate

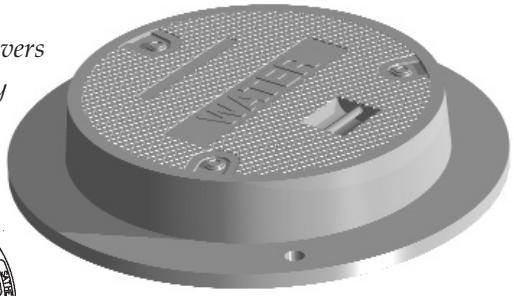

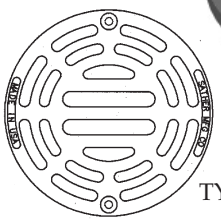

TYPE M1 Grate

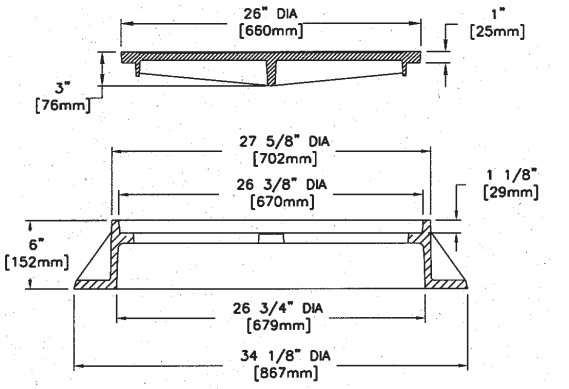

3725 Frame & Cover

Ref: B25 & B25SS

Heavy Duty
Machined Bearing Surfaces
Ductile Iron Covers
285 pounds (130kg) total weight

Options:
Special Lettered Covers
Bolted Assembly (Locking)
Watertite Assembly

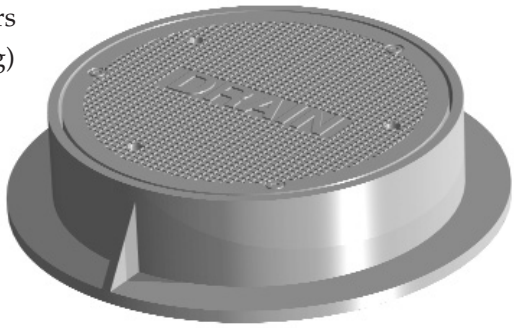

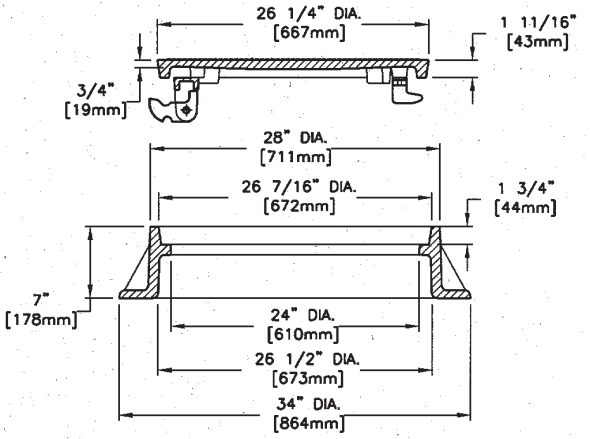

3730 Frame & Cover

Ref: 230

Heavy Duty
Machined Bearing Surfaces
Ductile Iron Cover
Cam Lock
360 pounds (180kg) total weight

Options:
Special Lettered Covers
Ductile Iron Grate

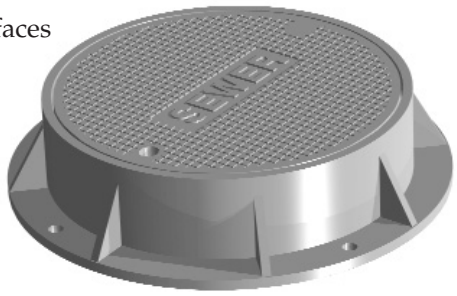

Table of Assembled Weights	
COVER	**GRATE**
265 lb.	280 lb.
120kg	127kg

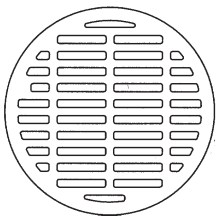

TYPE M1 Grate - Approx. 170 sq. in. (1097 sq cm) of opening

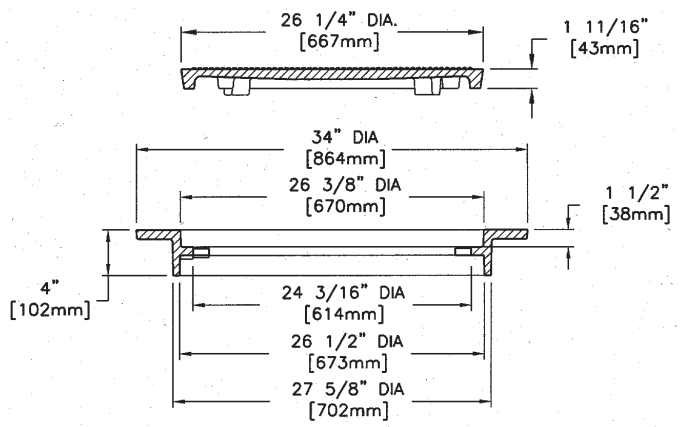

3735 Frame & Cover

Heavy Duty

Machined Bearing Surfaces

Top Flange and Bottom Flange Frames

Uses 3730 Cover

285 pounds (130kg) total weight

Options:

Watertite Assembly

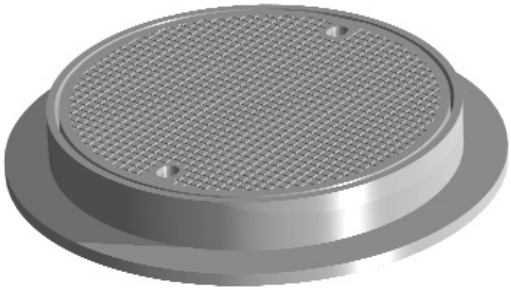

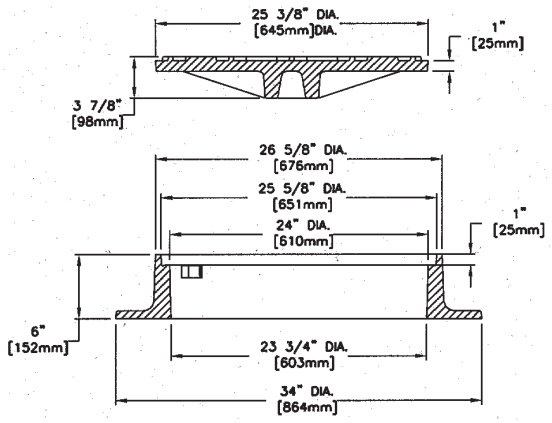

3736 Frame & Cover

Ref: SA36

Heavy Duty

Machined Bearing Surfaces

415 pounds (189kg) total weight

Options:

Watertite Assembly

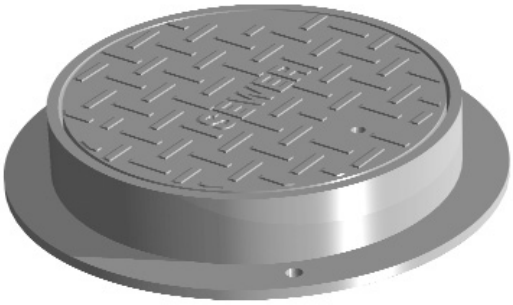

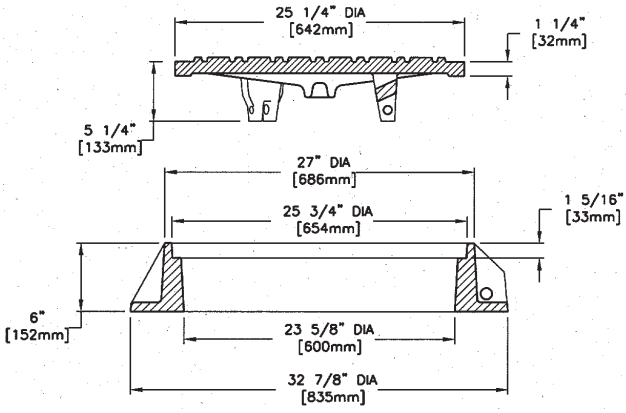

3740 Frame & Cover

Ref: 6x24 Metro Sewer

Heavy Duty

Machined Bearing Surfaces

Ductile Iron Cover

Cam Lock

395 pounds (180kg) total weight

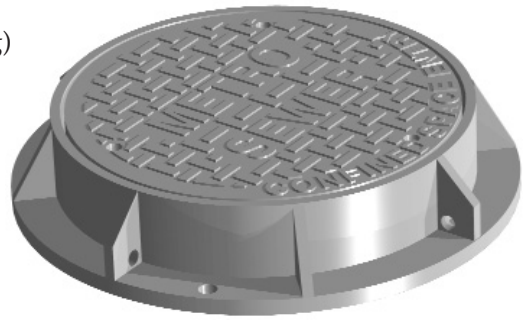

3761 Frame & Cover

Ref: 361

Heavy Duty
Machined Bearing Surfaces

Table of Assembled Weights	
4" FRM HT.	**9" FRM HT.**
180 lb.	230 lb.
82kg	105kg

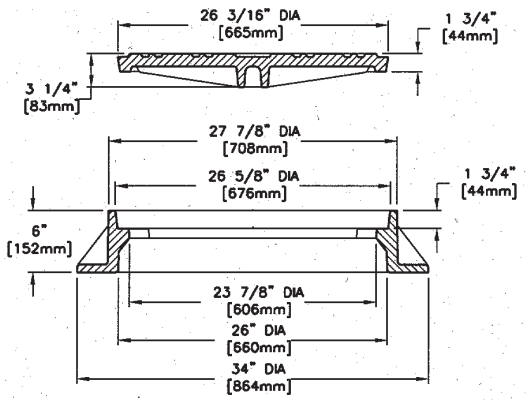

3767 Frame & Cover

Ref: 607

Heavy Duty
Machined Bearing Surfaces
Ductile Iron Covers
390 pounds (177kg) total weight

Options:
Special Lettered Covers
Watertite Assembly
Adjusting Rings

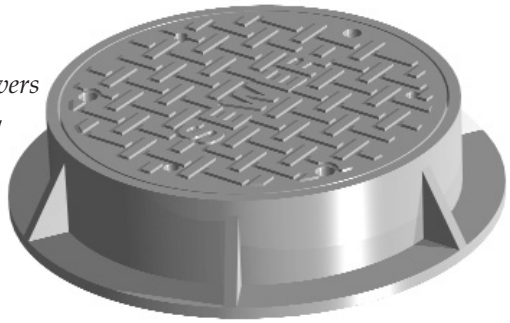

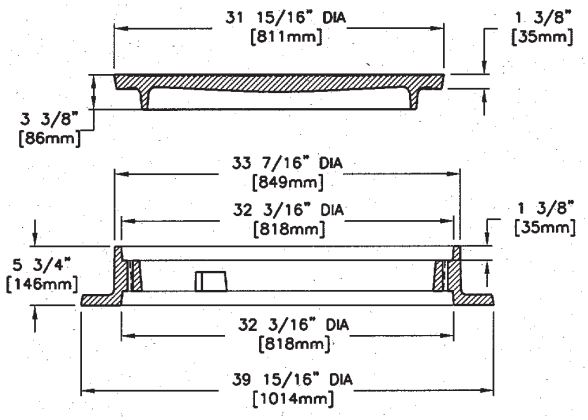

3790 Frame & Cover

Ref: 6x30

Heavy Duty
Machined Bearing Surfaces
Reversible Frame
Uses 1810 Cover
550 pounds (250kg) total weight

Options:
Special Lettered Covers
Watertite Assembly
Gasket Seal Covers
Two Bolt and Four Bolt Assembly (Locking)

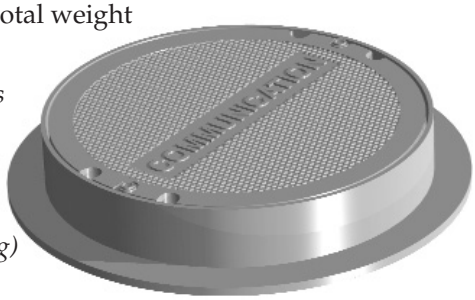

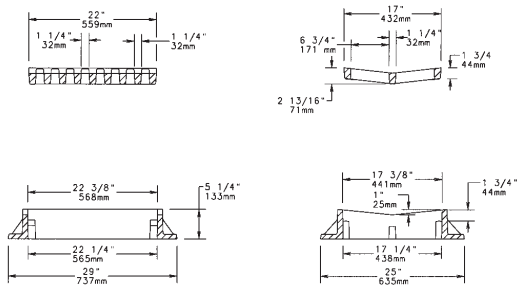

5031 Catch Basin Inlet

Heavy Duty
Concave Grate
Ductile Iron Frame & Grate
Approx. 140 sq. in (903 sq. cm) of opening
270 pounds (123kg) total weight

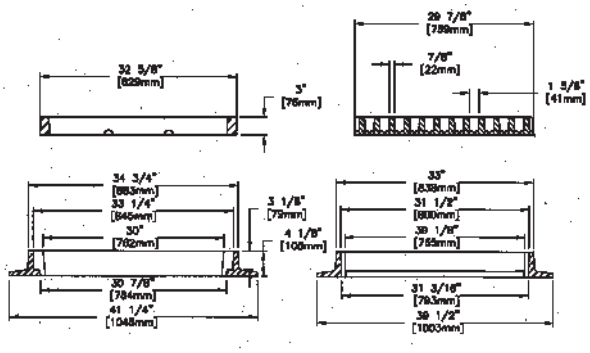

5416 Catch Basin Inlet

Heavy Duty
555 pounds (252kg) total weight
Options:
TYPE M1 "S" Grate
TYPE M3 Vane Grate

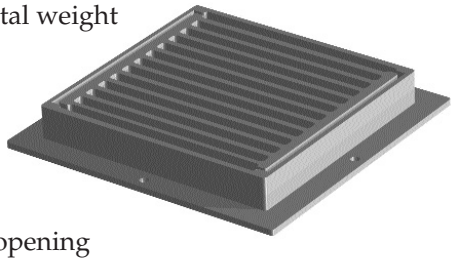

M2 Grate Shown
Approx. 520 sq. in of opening

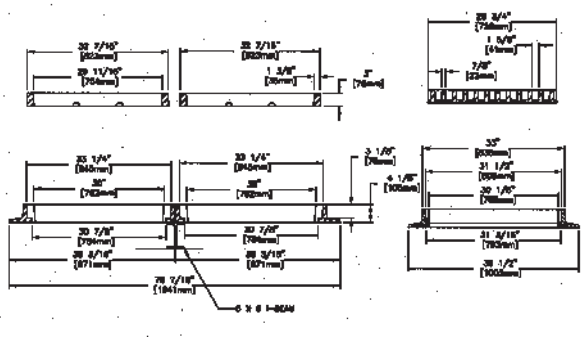

6x6 Steel I-beam required, supplied by others

5417 Catch Basin Inlet

Heavy Duty
Double 5416 Unit
1065 pounds (484kg) total weight
Options:
TYPE M1 "S" Grate
TYPE M3 Vane Grate

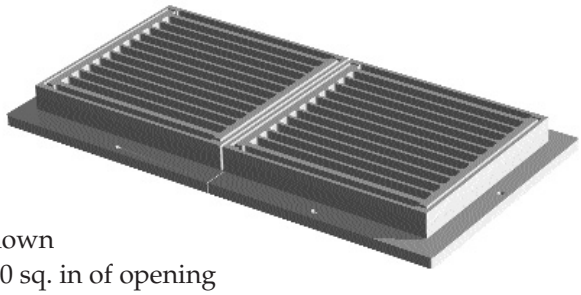

M2 Grate Shown
Approx. 1040 sq. in of opening

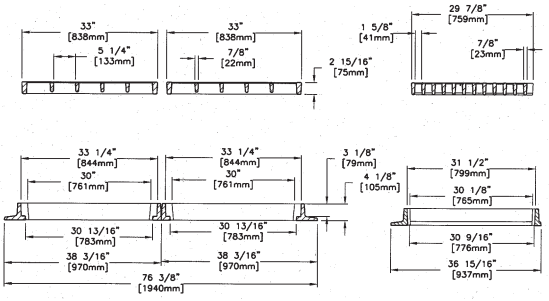

TYPE M3 Vane Grate
Approx. 730 sq. in. of opening
Special Lettering

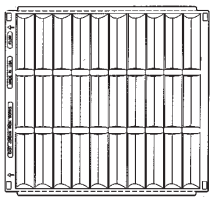

5418 Catch Basin Inlet

Heavy Duty
Double Inlet
1020 pounds (464kg) total weight
Uses 5416 Grates
Options:
TYPE M2 Flat Grate

TYPE M1 "S" Grate Shown
Approx. 1100 sq. in. of opening

7001 Curb Plate

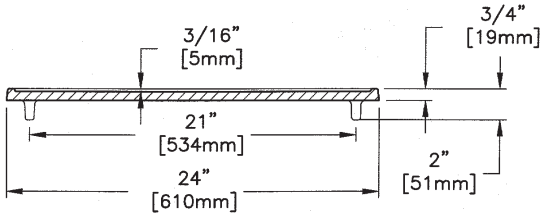

Used in sidewalk above a gutter inlet

Embed into concrete during construction

Customized messages available

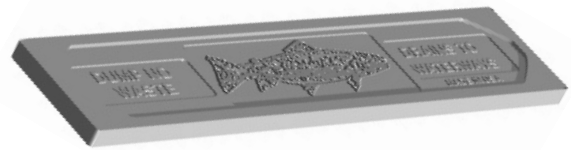

7030 Catch Basin Curb Inlets

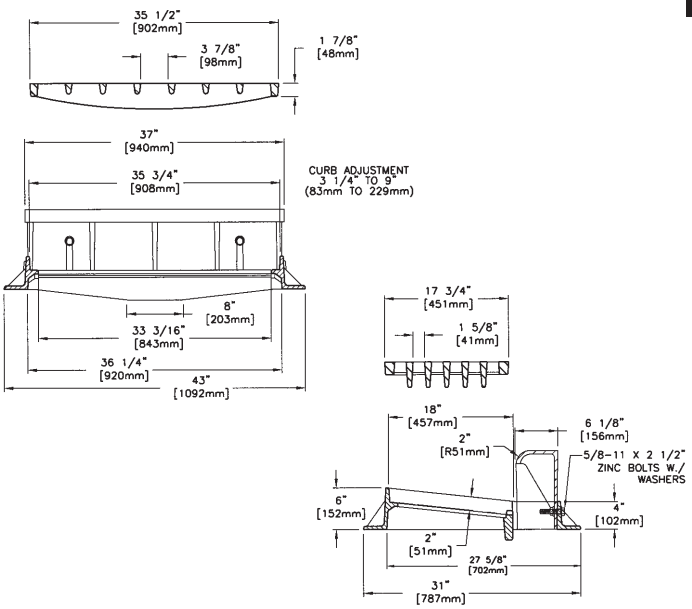

Heavy Duty

With TYPE M2 Grate and T1 Back

260 sq. inches (1677 sq cm) open area

Curb adjustment from 3¼" to 9" (83mm to 229mm)

Options: "Dump No Waste", Lettering & Logo

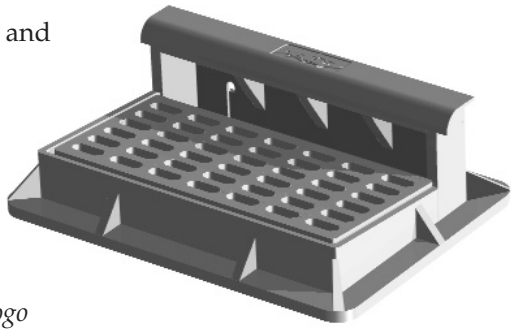

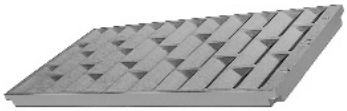

TYPE M6 Vane Grate
Approx. 260 sq. inches
(1677 sq. cm) open area

TYPE T3 Back
12" (305mm)
Concave Curb Radius
No Curb Adjustment

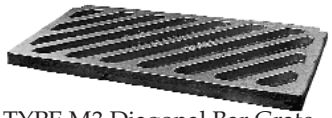

TYPE M3 Diagonal Bar Grate
Approx. 315 sq. inches
(2032 sq cm) open area, 2¼" wide opening between bars
Not recommended for bicycle traffic

TYPE M4 Vane Grate
Approx. 260 sq. inches
(1677 sq cm) open area

TYPE M5 Diagonal Bar Grate
Approx. 225 sq. inches
(1451 sq. cm) open area, 1¼" wide opening between bars
Not recommended for bicycle traffic

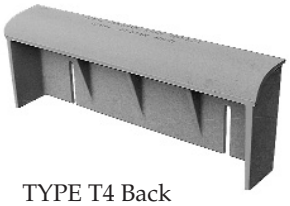

TYPE T4 Back
3" (76mm) Curb Radius
Curb Adjustable 6" to 11"
(152mm to 279mm)

Table of Assembled Weights					
BACK TYPE	GRATE STYLE				
	M2	M3	M4	M5	M6
T1	505 lb. (229kg)	465 lb. (211kg)	495 lb. (224kg)	495 lb. (224kg)	465 lb. (211kg)
T2	490 lb. (222kg)	450 lb. (204kg)	480 lb. (218kg)	480 lb. (218kg)	450 lb. (204kg)
T3	470 lb. (213kg)	430 lb. (195kg)	460 lb. (209kg)	460 lb. (209kg)	430 lb. (195kg)
T4	525 lb. (238kg)	485 lb. (220kg)	515 lb. (234kg)	515 lb. (234kg)	485 lb. (220kg)
T5	440 lb. (200kg)	400 lb. (181kg)	430 lb. (195kg)	430 lb. (195kg)	400 lb. (181kg)
T6	470 lb. (213kg)	430 lb. (195kg)	460 lb. (209kg)	460 lb. (209kg)	430 lb. (195kg)

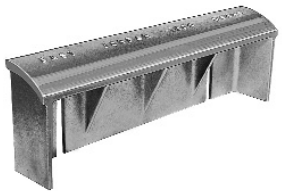

TYPE T2 Back
12" (305mm) Curb Radius
Curb Adjustable 4" to 9"
(102mm to 229mm)

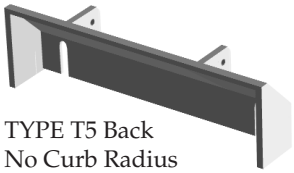

TYPE T5 Back
No Curb Radius
Curb Adjustable 4¼" to 8"
(114mm to 203mm)

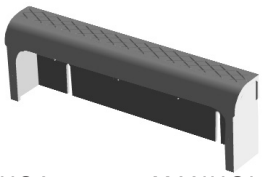

TYPE T6
Light Weight Back
3" (76mm) Curb Radius
Curb Adjustable 6" to 10"
(152mm to 254mm)

7510 Catch Basin Curb Inlets

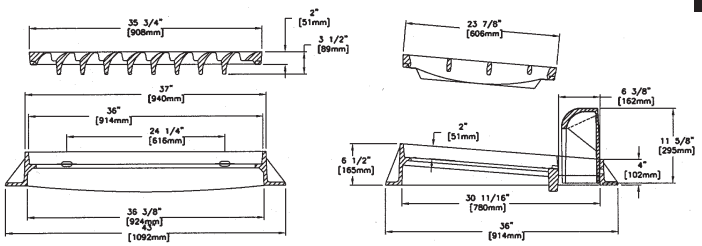

Heavy Duty
Uses 7030 Series Backs
Specify Back Type
M1 Grate not suitable for bicycle traffic
Options:
"DUMP NO WASTE" LETTERING AND LOGO

Table of Assembled WT. & Open Area		
GRATE TYPE	**TOTAL WT.**	**OPEN AREA**
M1	570 lb. 259kg	410 sq. in. 2057 sq. cm
M2 "S"	650 lb. 295kg	340 sq. in. 2194 sq.cm
M3 VANE	685 lb. 311kg	446 sq. in. 2877 sq. cm
M4	555 lb. 252kg	324 sq. in. 2090 sq. cm

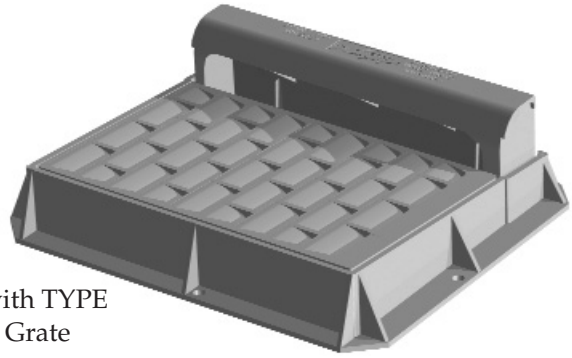

Shown with TYPE M3 Vane Grate

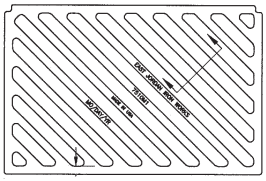

TYPE M1 Grate - Not suitable for bicycle traffic

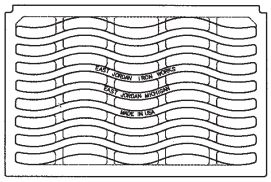

TYPE M2 "S" Grate

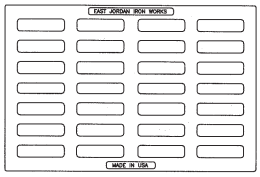

TYPE M4 Grate

7700 Catch Basin Inlet

Ref: 18 x 24

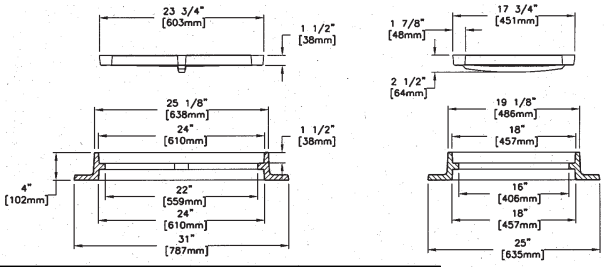

Heavy Duty
Reversible Frame, specify BF or TF
Options:
Solid Cover
Ductile Iron Grate and Cover
Diagonal and Center Bolting
Adjusting Frame

Table of Assembled WT. & Open Area		
GRATE TYPE	**TOTAL WT.**	**OPEN AREA**
M1	240 lb. 109kg	128 sq. in. 826 sq. cm
M2 VANE	215 lb. 98kg	100 sq. in. 654 sq.cm
M3 VANE BIDIRECTIONAL	220 lb. 100kg	100 sq. in. 654 sq.cm
M4 ADA	200 lb. 91kg	324 sq. in. 2090 sq. cm
SOLID COVER	225 lb. 102kg	NA

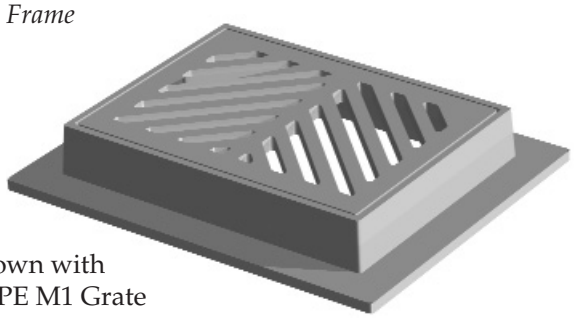

Shown with TYPE M1 Grate

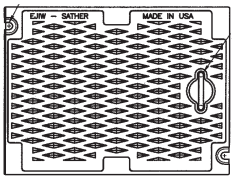

TYPE A Solid Cover

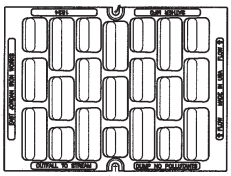

TYPE M2 Vane Grate

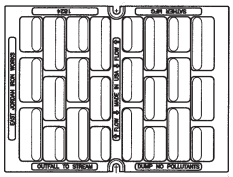

TYPE M3 Bidirectional Grate

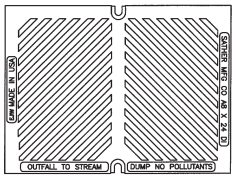

TYPE M4 ADA Grate

7701 Catch Basin Inlets Ref: Thru Curb

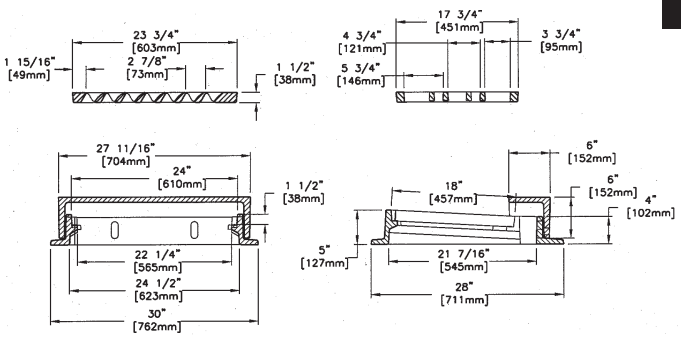

Heavy Duty

Uses 7700 grates

Shown with Type M2 Vane Grate and Type 2 6″ Back

Options:

T1 9″ & T2 6″ Backs

"OUTFALL TO STREAM DUMP NO POLLUTANTS" Lettering

Fish Logo

Ductile Iron Grate and Cover

Diagonal and Center Bolting

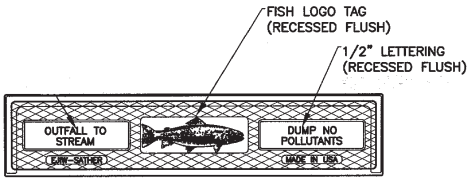

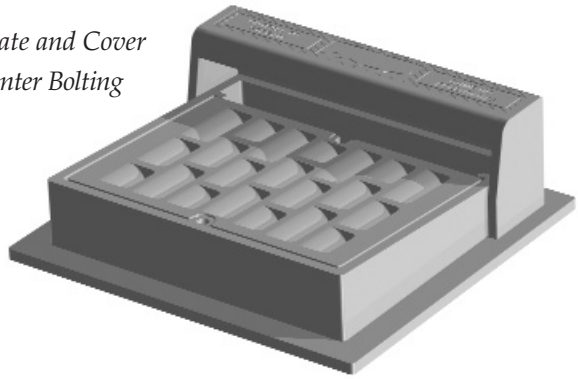

Table of Assembled Weights				
BACK TYPE	7700 GRATE TYPE			
	M1	M2	M3	M4 ADA
T1 9"	335 lb. 152kg	335 lb. 152kg	340 lb. 155kg	145 lb. 91kg
T2 6"	295 lb. 134kg	295 lb. 134kg	300 lb. 136kg	280 lb. 127kg

7711 Rolled Curb Frame & Grate

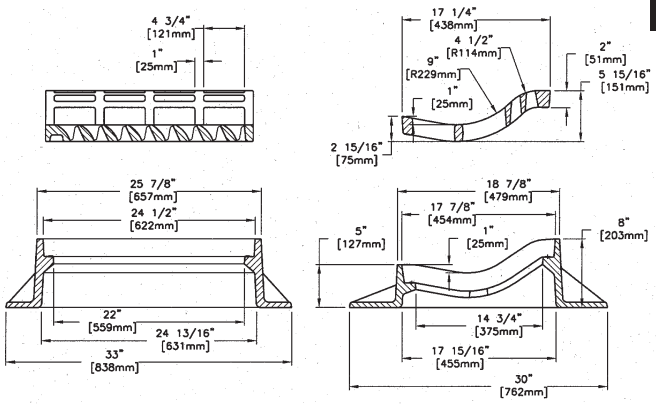

Heavy Duty

Specify Grate Type

Options:

Rolled Grate

LH or RH Rolled Vane Grate

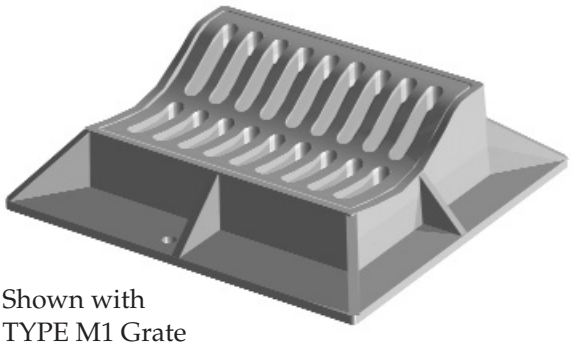

Shown with
TYPE M1 Grate

Table of Assembled Weights	
M1 Grate	M2/M3 Grate
380 lb. 173kg	330 lb. 150kg

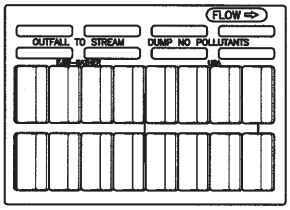

TYPE M3 Rolled
Vane Grate

7718 Grate & Cover

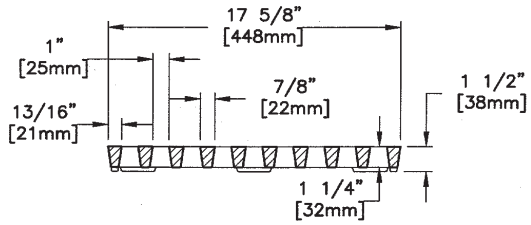

Light Duty
Grate 30 pounds (14kg)
Cover 50 pounds (23kg)

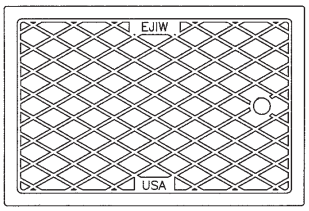

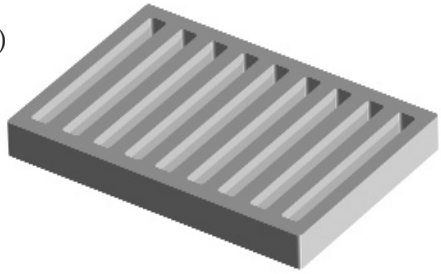

7720 Frame & Grate

Ref: 14x20

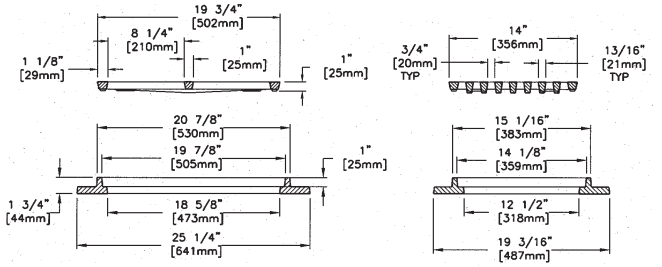

Light Duty
Approx. 100 sq. in. (645sq. cm) of opening
Options:
Plain cover, Drain lettering

Table of Assembled Weights	
Grate	**Cover**
90 lb.	105 lb.
41kg	48kg

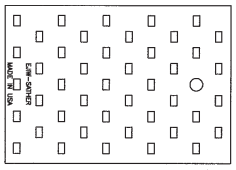

Plain Cover

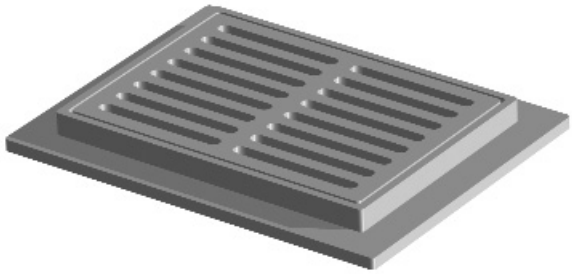

7743 Gutter Inlet with End Outlet

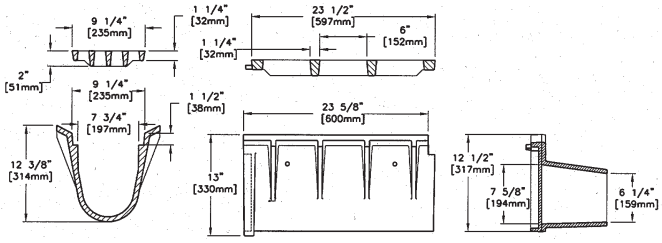

Heavy Duty
485 pounds (220kg) total weight
Options:
Adjusting Frame
End Caps

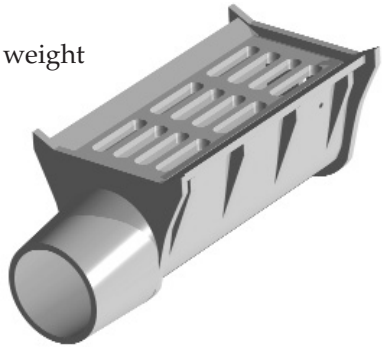

7744 Gutter Inlet with Side Outlet

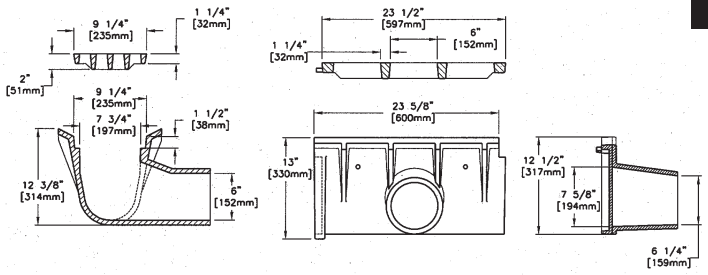

Heavy Duty
485 pounds (220kg) total weight
Options:
Adjusting Frame

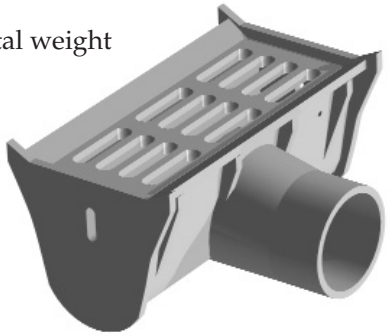

7750 Frame & Grate

Ref: 20 x 24

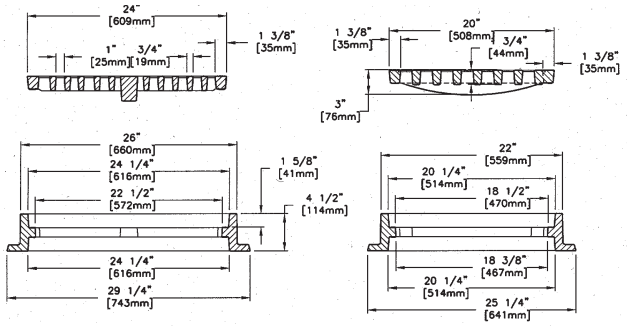

Heavy Duty
Ductile Iron Grates
Options:
Ductile Iron Cover
Drop Handle
Diagonal and Center Bolting
Adjusting Frame
ADA Grate - V7397

Table of Assembled Weights					
FRAME TYPE	GRATE TYPE				COVER
	M1	M2	M3	Beehive	
UNBOLTED	280 lb. 127kg	265 lb. 120kg	270 lb. 123kg	225 lb. 102kg	290 lb. 132kg
BOLTED	285 lb. 130kg	270 lb. 123kg	275 lb. 125kg	230 lb. 105kg	295 lb. 134kg

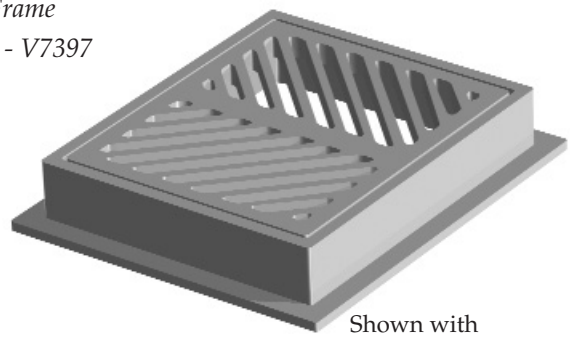

Shown with TYPE M1 Grate

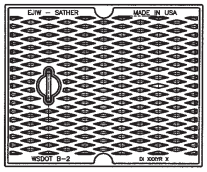

TYPE A Solid Cover

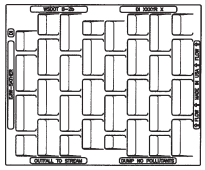

TYPE M2 Vane Grate

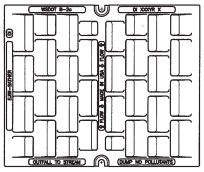

TYPE M3 Bidirectional Grate

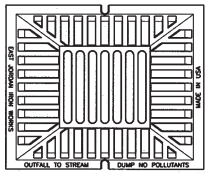

TYPE M4 ADA Grate

7765 Curb & Gutter Inlet

Ref: S263 & 265

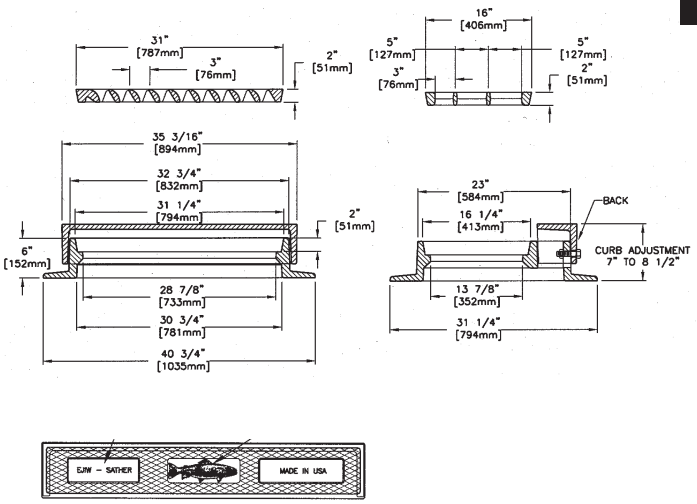

Heavy Duty
Ductile Iron Grate
Trout Logo on 6″ T1 Back
Approx. 163 sq. in. (1051 sq. cm) of opening
560 pounds (255kg)
total weight

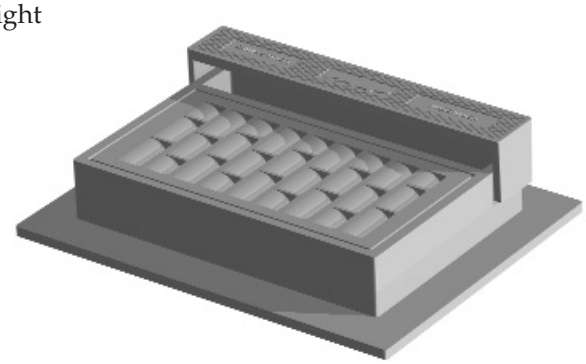

7766 Curb & Gutter Inlet

Ref: 262

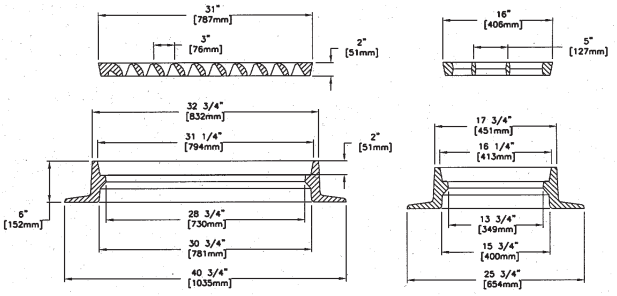

Heavy Duty

Ductile Iron Grate - 7765

Approx. 163 sq. in.
(1051 sq. cm) of opening

400 pounds
(182kg) total weight

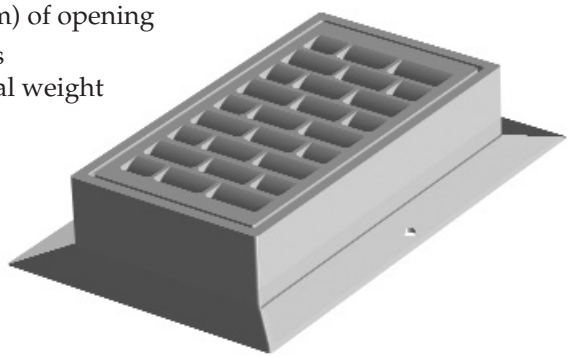

7780 Catch Basin

Ref: 17x17

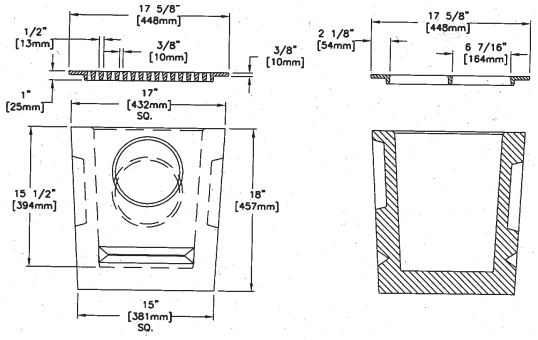

Non Traffic Grate

25 pounds
(11kg) total weight

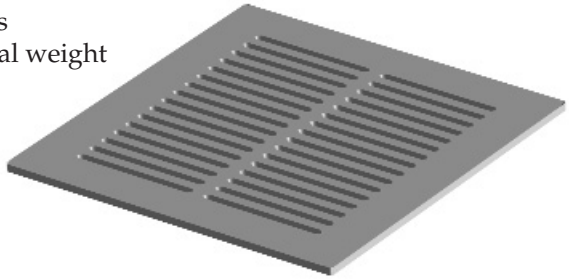

7790 Grate

Ref: Lynch

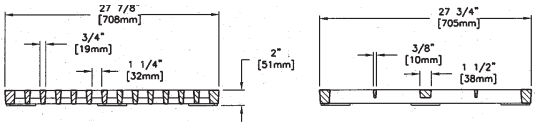

Heavy Duty

Ductile Iron

165 pounds
(75kg) total weight

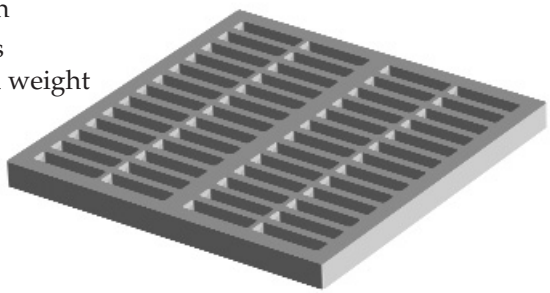

7793 Grate

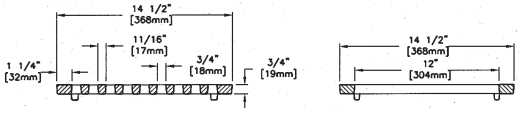

Non-Traffic

Approx. 80 sq. in. (36 sq. cm) of opening

25 pounds
(11kg) total weight

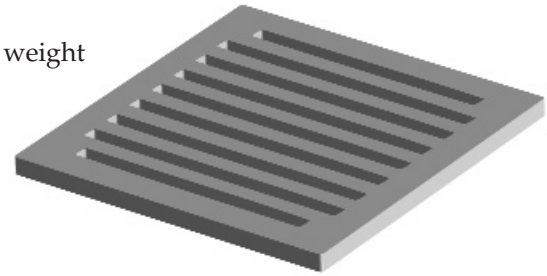

7795 Grate

Ref: 9x9 & 12x12

Non Traffic Grate

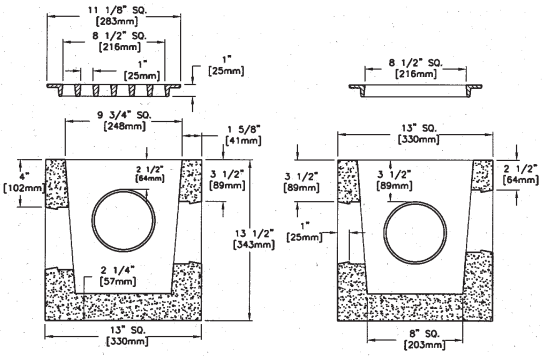

Table of Weights	
TYPE M1	**TYPE M2 ADA**
10 lb.	20 lb.
5kg	9kg

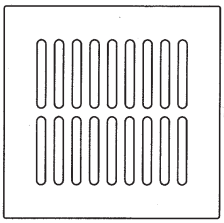

TYPE M2 Grate - ADA
Approx. 36 sq. in.
of opening

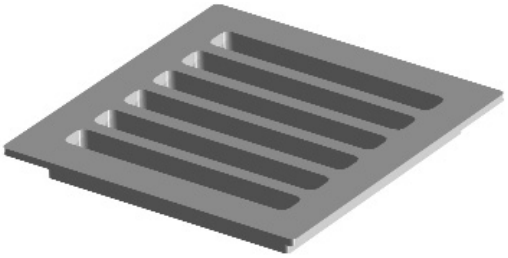

Shown with
TYPE M1 Grate
Approx. 51 sq.
in. of opening

7796 Grate

Ref: 11x14

Non Traffic
13 pounds (.5kg) total weight

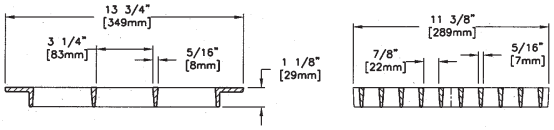

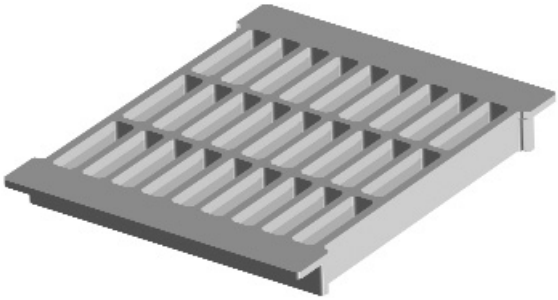

7797 Frame & Grate

Non Traffic
Approx. 69 sq. in. (445 sq. cm) of opening
Options:
Solid Cover
Bolted Asembly

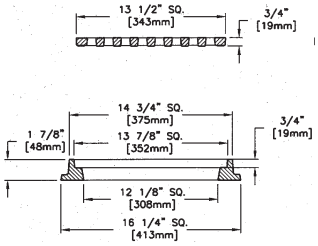

Table of Assembled Weights	
Grate	**Cover**
65 lb.	55 lb.
30kg	25kg

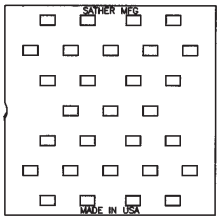

Solid Cover

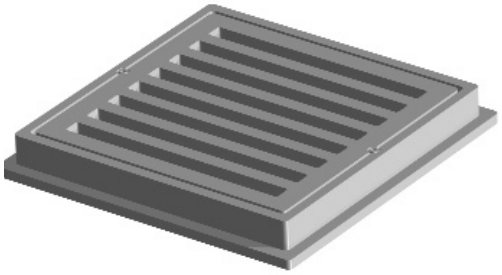

SUGGESTED SPECIFICATION FOR CONSTRUCTION AND UTILITY CASTINGS

General: This specification is applicable for gray and ductile iron construction castings. All castings shall be manufactured in the United States of America. All manufacturers shall be approved suppliers and be able to demonstrate that there is an acceptable quality control program at the producing foundry, prior to supplying castings.

Materials: Gray iron castings for heavy duty applications shall be manufactured from iron conforming to ASTM A48, Class 35B, as noted in section 3.1 of AASHTO M306, or as requested by the purchaser. Gray iron castings for sidewalk or pedestrian applications shall be manufactured from iron conforming to ASTM A48, Class 30B or 35B, or as requested by the purchaser. Ductile iron castings shall conform to ASTM A536. The iron material used in products provided shall have a minimum recycled material content of 75%. The recycled materials shall consist of post-consumer material.

Manufacture: Castings shall be of uniform quality, free from sand holes, gas holes, shrinkage, cracks and other surface defects. Castings shall be ground smooth and well cleaned by shot blasting. For traffic service castings, bearing surfaces between manhole rings and covers or grates and frames shall be cast or machined with such precision to prevent rocking. As-cast dimensions may vary within accepted foundry tolerances as outlined in the Iron Castings Handbook published by the American Foundry Society, Inc. Nominally, casting dimensional tolerances shall be +/- 1/16" per foot. All published casting weights are average and approximate values and shall vary +/- 5%. Castings shall be furnished painted or unpainted as specified by the purchaser.

Proof Load Testing: Traffic service castings shall have a first article proof load test conducted and the results of that proof load shall be made available to the purchaser upon request. The proof load shall be conducted in accordance with the method and procedure that is outlined in AASHTO M306, Section 7.0, Proof Load Testing. The casting shall be tested on a suitable and calibrated load testing machine and the casting shall hold a 40,000 pound proof load for one minute without experiencing any cracks or detrimental permanent deformation.

Inspection: Inspections shall be in accordance with section 9.1.1 (refer to above-Proof Load Testing) or 9.1.2 of AASHTO M306. Results of these tests shall be furnished to the purchaser upon request. The heat or production date and product numbers shall be cast on the casting. This information shall be used for casting traceability and testing.

Certification: A foundry certification shall be furnished to the purchaser stating that samples representing each lot have been tested, inspected, and are in accordance with this specification.

Marking: Each casting shall be identifiable and show, at a minimum, the following: name of the producing foundry, country of manufacture (such as "Made in USA"), ASTM material designation, recycle symbol, individual part number, cast or heat date. Castings shall include all lettering as shown on the specification drawings.

Sampling: Random checks on the castings may be conducted by the purchaser. These random checks shall be conducted in accordance with AASHTO M306, Section 6.0 guidelines.
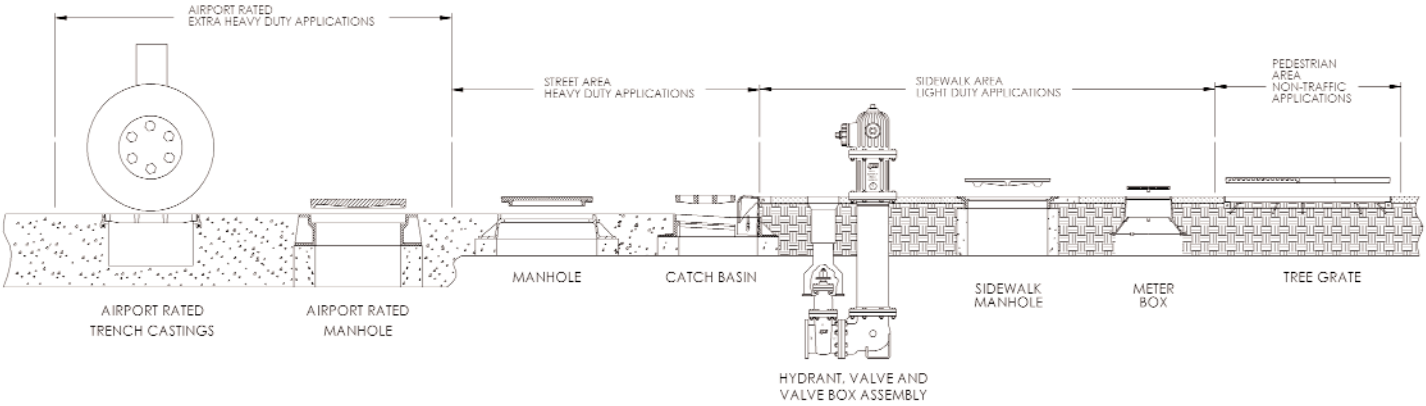
Records: Test results for each lot of castings shall be maintained by the foundry for a minimum of seven years and shall be made available to the purchaser upon request.