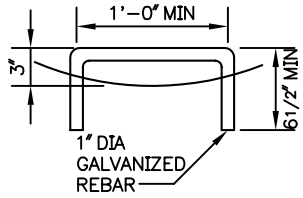

HANDHOLD

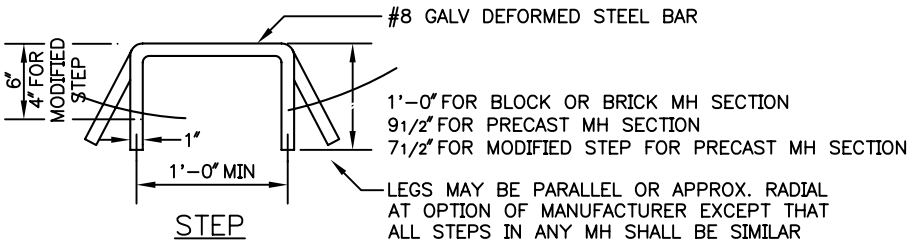

STEP

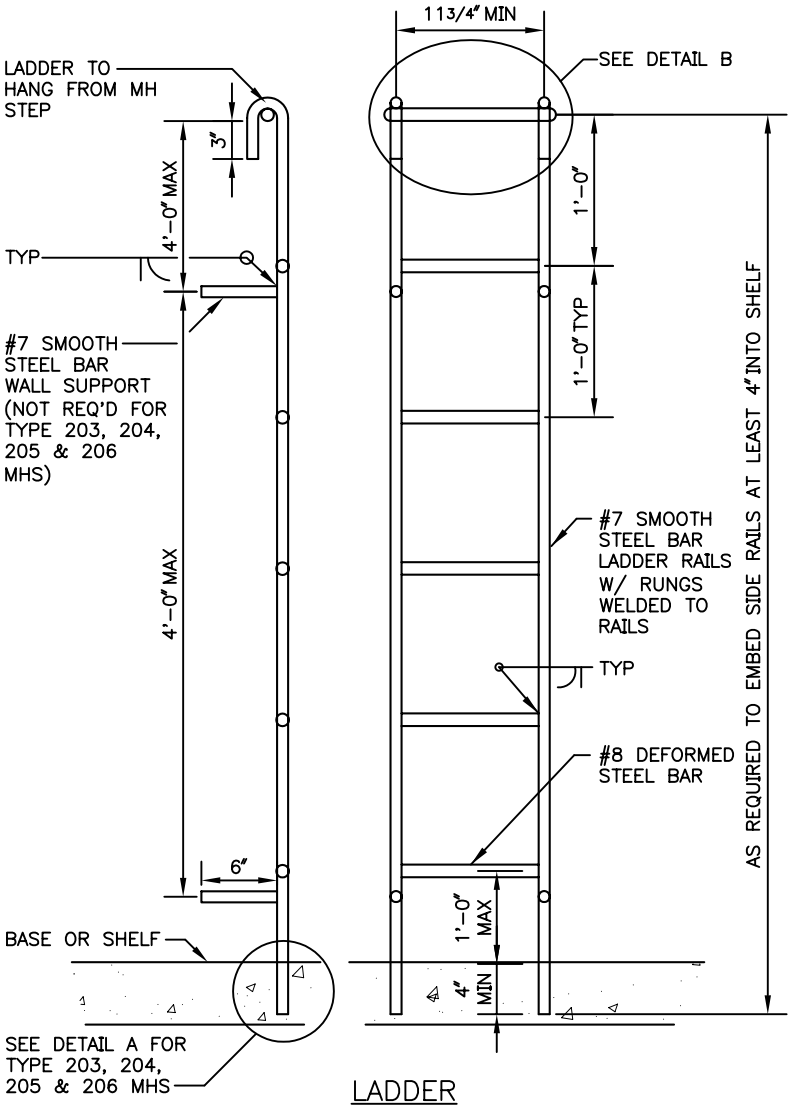

LADDER

Scale: 1?" = 1'-0"

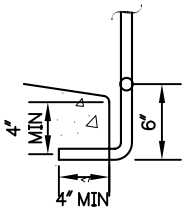

DETAIL A

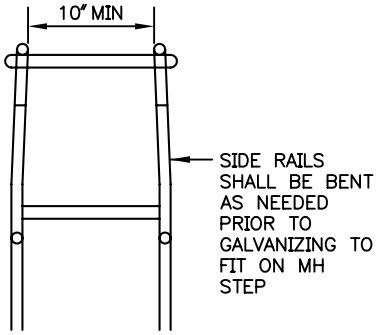

DETAIL B

NOTE:

1. DIMENSIONS FOR THE MH LADDER AND STEP ARE MINIMUM REQUIREMENTS ONLY. THE LADDER SHOWN WILL NOT MEET THE 10" MIN CLEARANCE IN DETAIL B WHEN INSTALLED ON THE STEP SHOWN ABOVE
2. NON-COATED STEPS AND PREFABRICATED LADDER SHALL BE GALVANIZED AFTER FABRICATION
3. STEPS AND HANDHOLDS SHALL BE INSTALLED AT 1'-0" SPACING. WHEN THE DISTANCE FROM THE LAST (HIGHEST) STEP OR HANDHOLD TO THE TOP OF THE MH FRAME EXCEEDS 1'-0" AND ANOTHER STEP OR HANDHOLD CANNOT BE INSTALLED BECAUSE OF THE LOCATION OF THE MH FRAME, A HANDHOLD SHALL BE INSTALLED BETWEEN THE TOP 2 LAYERS OF BRICK.

City of Seattle Department of Parks & Recreation	**MH LADDER & STEPS DETAIL** **STD. DETAIL NO. 33 49 13.26**