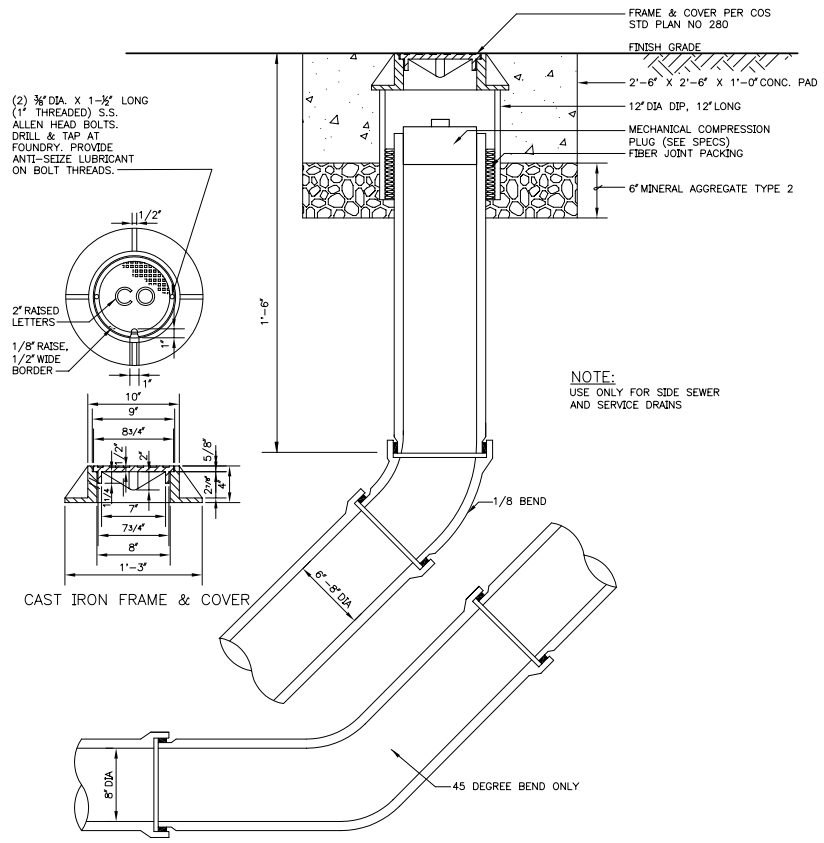

1 CLEAN OUT DETAIL
NOT TO SCALE

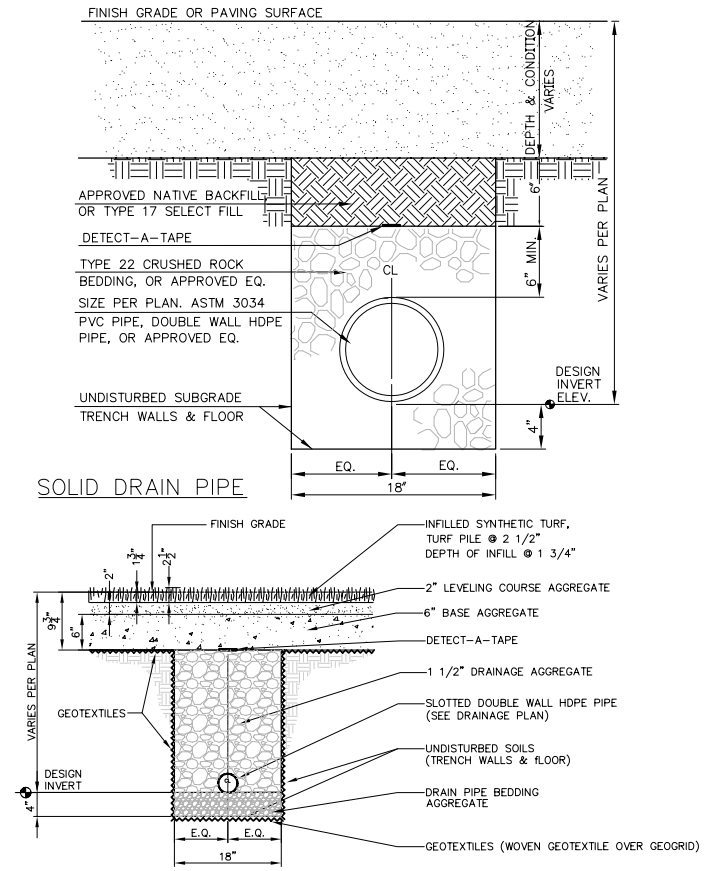

2 DRAINLINE PIPE DETAILS
NOT TO SCALE

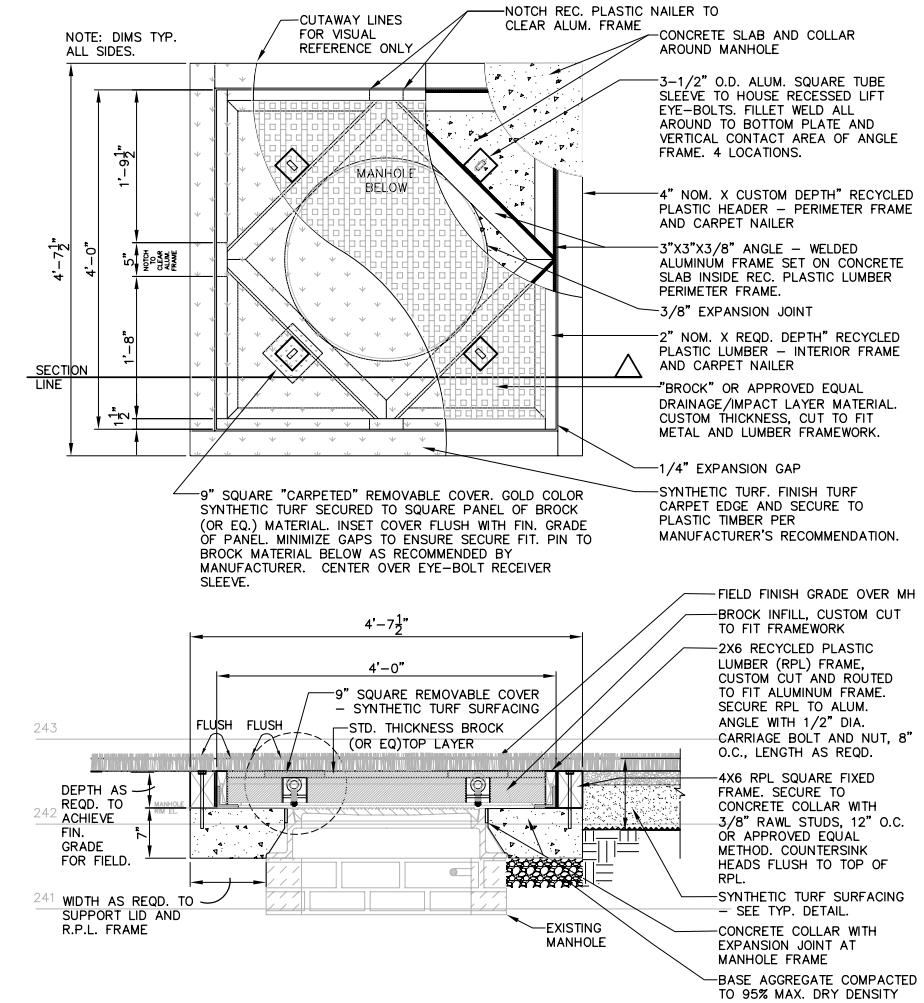

3 TYPE 241 CATCH BASIN DETAIL
NOT TO SCALE

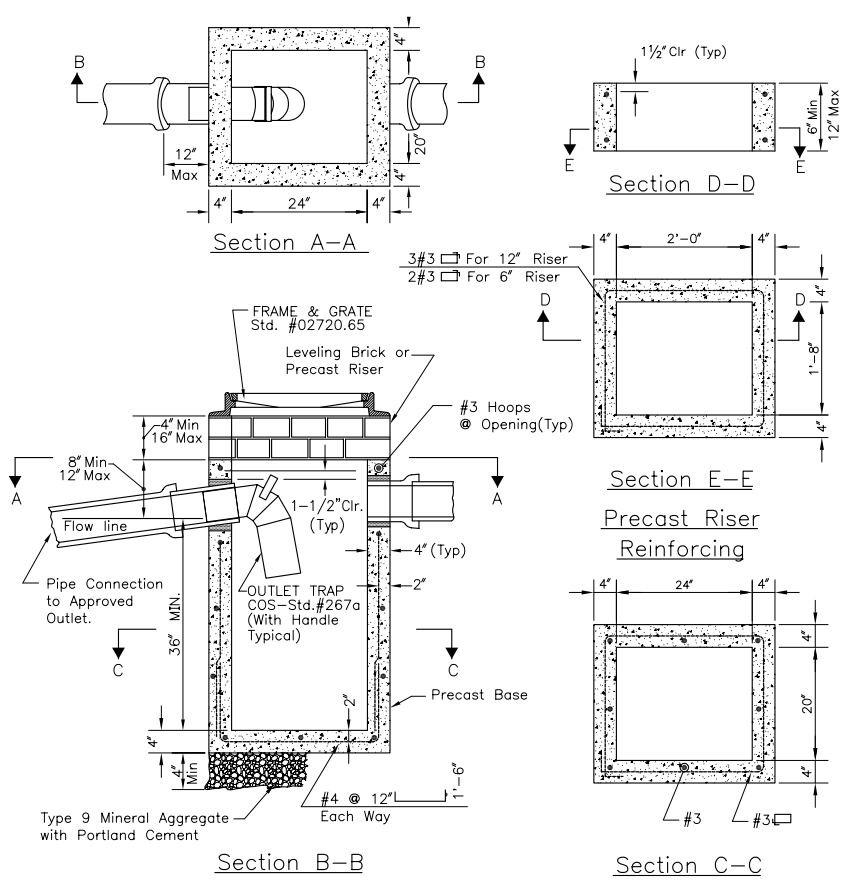

4 INLET FRAME & GRATE DETAIL
NOT TO SCALE

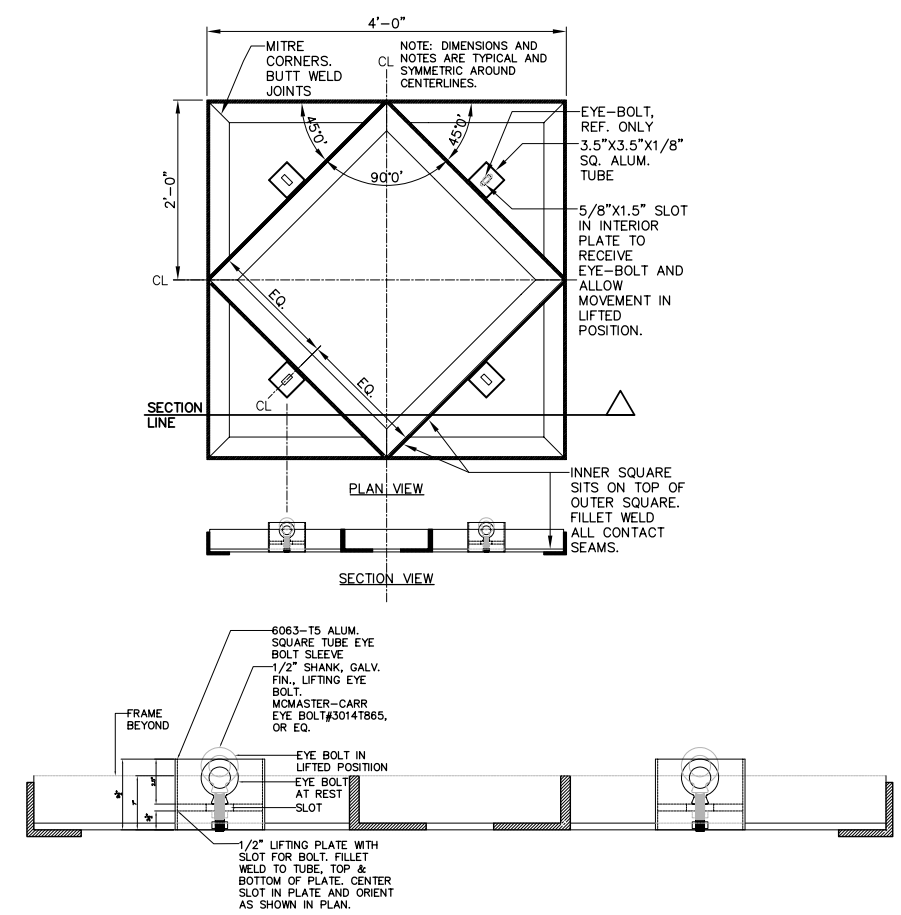

5 ALUMINUM FRAME W/ SYN. TURF REMOVABLE M.H. COVER
NOT TO SCALE

>>>>CAUTION - CALL 811<<<<
UTILITY NOTIFICATION CENTER BEFORE YOU DIG!
WWW.CALLBEFOREYOUDIG.ORG

NOT LESS THAN **2** OR MORE THAN **10** BUSINESS DAYS PRIOR TO COMMENCING EXCAVATION OR DEMOLITION, SECURE THE SERVICES OF A COMMERCIAL UNDERGROUND UTILITIES LOCATOR SERVICE TO IDENTIFY BELOW-GROUND IMPROVEMENTS THAT MAY NOT BE INDICATED ON THE DRAWINGS. ADDITIONALLY, TO REQUEST ON-SITE UNDERGROUND UTILITY SYSTEMS LOCATES, CALL **SPR INSPECTION REQUEST LINE @ (206) 684-7034.** REFER TO SECTIONS 02100 & 02120 OF THE SPECIFICATIONS FOR INSTRUCTIONS ON HOW TO PROCEED.

NO.	REVISION - AS BUILT	DATE
3		
2		
1		

REVIEWED: PARK ENGINEER DATE

All work done in accordance with the City of Seattle Standard Plans and Specifications in effect on the date shown above, and supplemented by Special Provisions.

SEATTLE PARKS AND RECREATION

FACILITY NAME

PROJECT NAME

SYNTHETIC FIELD DRAINAGE DETAILS

DESIGNED X
DRAWN X
CHECKED X
DATE X
SHEET X OF X
ORDINANCE NO. X
CONTRACT NO. X
SCALE X

Sht. No.