NOTES:

1. TYPE A MH DESIGNATES MH WITH PRECAST CONCENTRIC CONE SECTIONS.
2. MAXIMUM DIMENSION FROM OUTSIDE MH WALL TO THE FIRST PIPE JOINT, THE GREATER OF 1/2 INSIDE PIPE DIAMETER OR 1'–0".
3 FOR TYPE A MH, LOCATE MH STEPS ON THE SIDE PERPENDICULAR TO THE DIRECTION OF THE FLOW IN THE CHANNEL.
4. TOTAL HEIGHT OF AN EXTENSION, MH FRAME AND LEVELING BRICKS SHALL NOT EXCEED 1'–10".
5. MH BASE SECTION SHOWN IN SECTION A–A IS TYPICAL FOR TYPE A MH.
6. THE MAXIMUM HOLE SIZE SHALL BE THE OUTSIDE DIAMETER OF THE PIPE PLUS THE MH WALL THICKNESS. THE MINIMUM HOLE SIZE SHALL BE THE OUTSIDE DIAMETER OF THE PIPE PLUS 4 INCHES. MINIMUM DISTANCE BETWEEN HOLES IS 8 INCHES.
7. PRECAST MH COMPONENTS SHALL CONFORM TO ASTM C 478. JOINTS BETWEEN PRECAST COMPONENTS SHALL BE RUBBER GASKETED CONFORMING TO ASTM C 443.

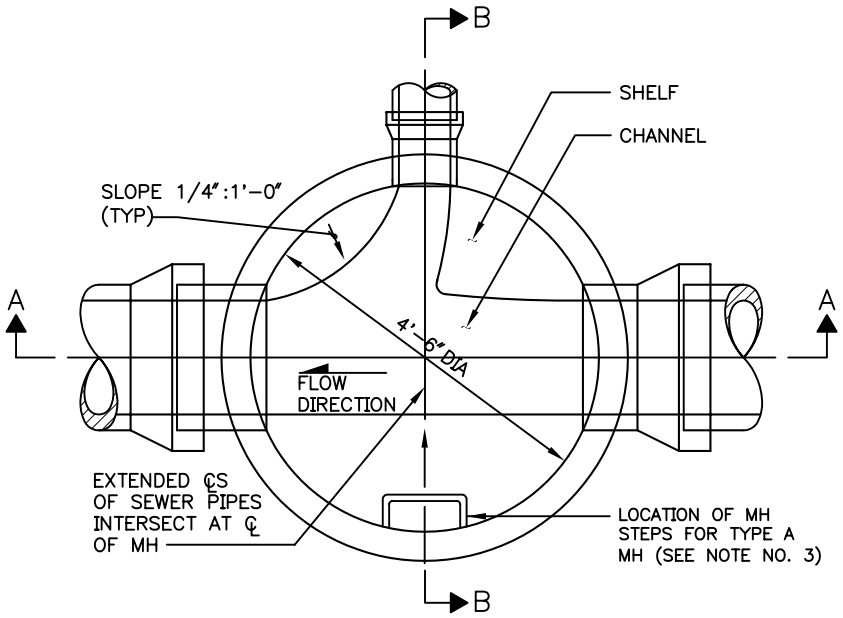

PLAN VIEW
(TOP REMOVED)

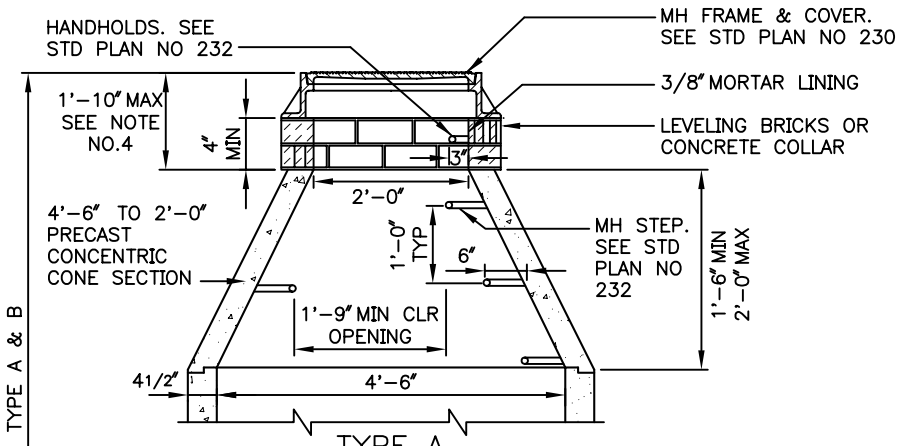

TYPE A
SECTION B–B

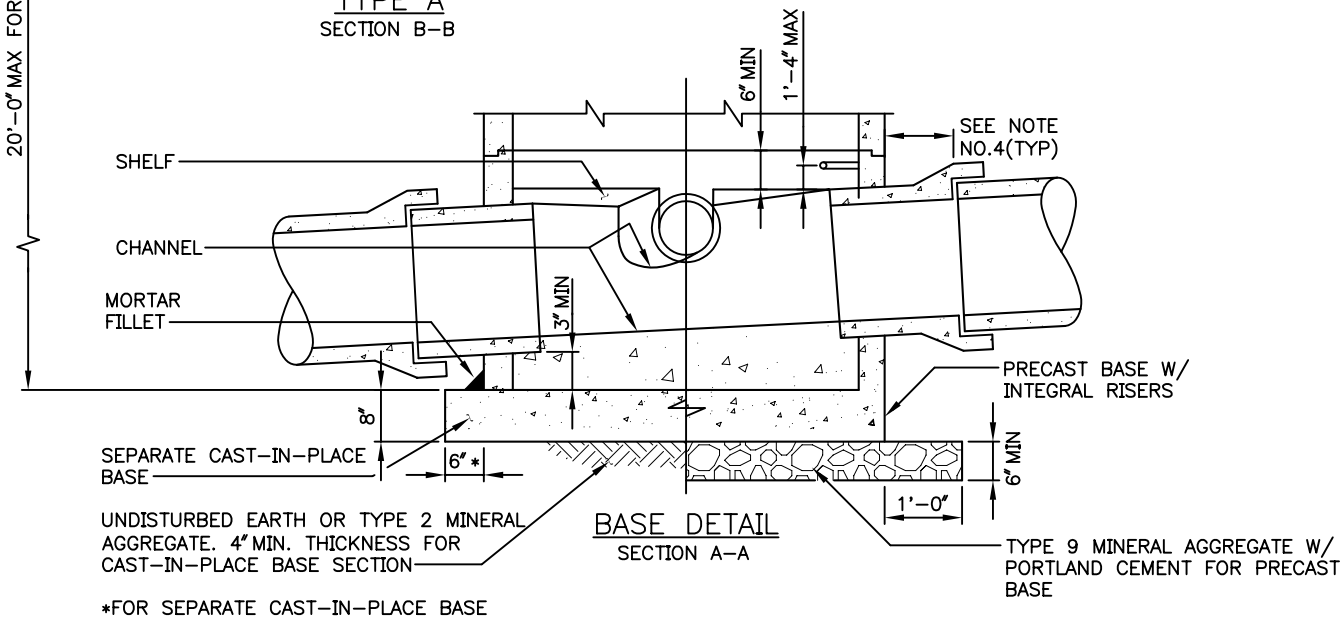

BASE DETAIL
SECTION A–A

City of Seattle Department of Parks & Recreation	**MAINTENANCE HOLE - TYPE 201a** **STD. DETAIL NO. 33 49 13.16**