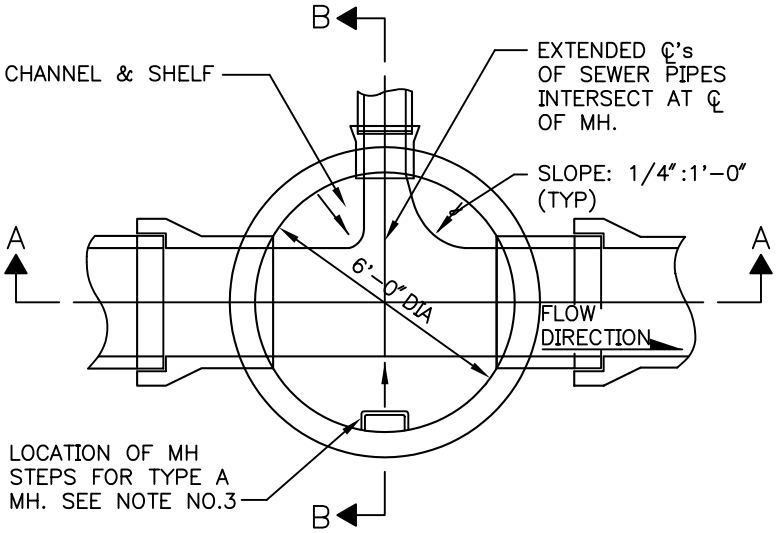

PLAN VIEW
(TOP REMOVED)

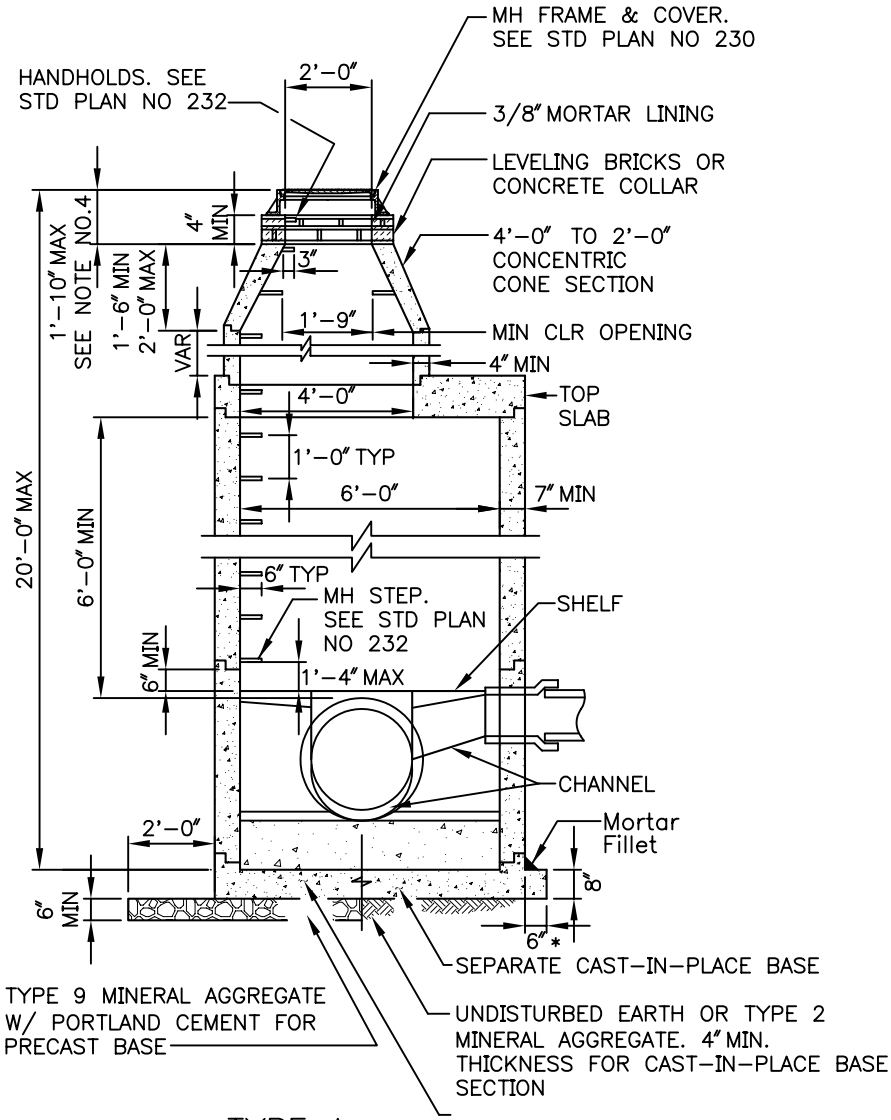

TYPE A
SECTION B-B

*FOR SEPARATE CAST-IN-PLACE BASE

NOTES:

1. MH 202 TYPE A DESIGNATES A MH TOP SLAB WITH A CONCENTRIC CONE & 4'-0" DIA ACCESS.
2. MAXIMUM DIMENSION FROM OUTSIDE MH WALL TO THE FIRST PIPE JOINT. THE GREATER OF 1/2 INSIDE PIPE DIAMETER OR 1'-0".
3. FOR TYPE A MH, LOCATE MH STEPS ON THE SIDE PERPENDICULAR TO THE DIRECTION OF THE FLOW IN THE CHANNEL.
4. TOTAL HEIGHT OF AN EXTENSION, MH FRAME & COVER AND LEVELING BRICKS SHALL NOT EXCEED 1'-10".
5. MH BASE SECTION SHOWN IN SECTION A-A IS TYPICAL FOR TYPE A MH.
6. THE MAXIMUM HOLE SIZE SHALL BE THE OUTSIDE DIAMETER OF THE PIPE PLUS THE MH WALL THICKNESS. THE MINIMUM HOLE SIZE SHALL BE THE OUTSIDE DIAMETER OF THE PIPE PLUS 4 INCHES. MINIMUM DISTANCE BETWEEN HOLES IS 1'-0" INCHES.
7. PRECAST MH COMPONENTS SHALL CONFORM TO ASTM C 478. JOINTS BETWEEN PRECAST COMPONENTS SHALL BE RUBBER GASKETED CONFORMING TO ASTM C 443.

City of Seattle **Department of Parks & Recreation**	**MAINTENANCE HOLE - TYPE 202a** **STD. DETAIL NO. 33 49 13.19**