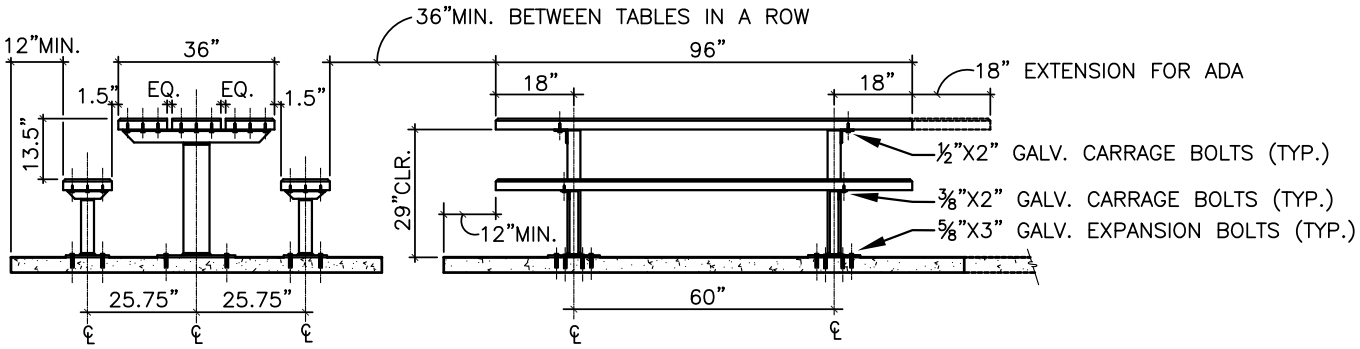

SECTION VIEW

ELEVATION VIEW

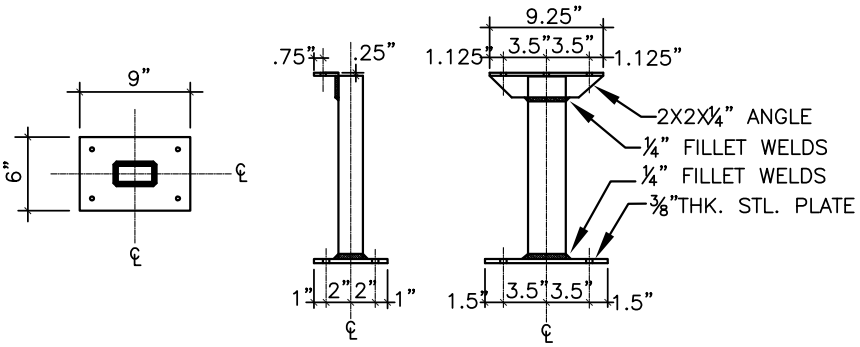

BENCH SUPPORT

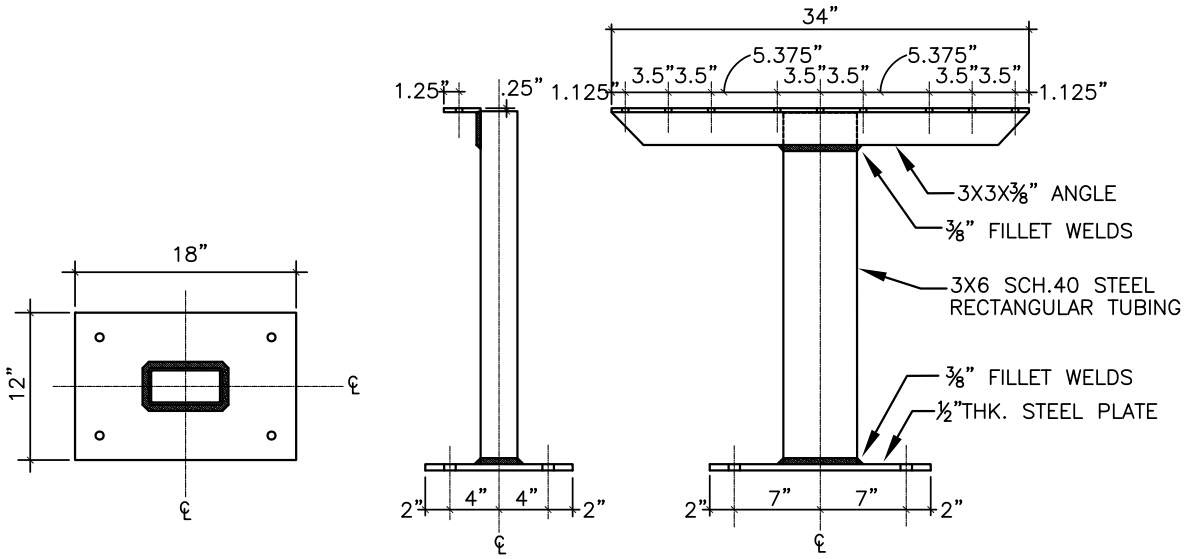

TABLE SUPPORT

GENERAL NOTES:

- CHAMFER ALL EXPOSED WOOD EDGES & ENDS ½" (TYP.)
- INSTALL 2 SUPPORTS PER BENCH & 2 SUPPORTS PER TABLE (TYP.)
- ALL WOOD MEMBERS SHALL BE NEW OR RECYCLED UNTREATED DOUG FIR (TYP.)
- ALL WELDS SHALL BE ¼"MIN. FILLETS, GROUND SMOOTH (TYP.)
- ALL METAL MEMBERS SHALL BE HOT DIPPED GALVANIZED AFTER FABRICATION (TYP.)

City of Seattle Department of Parks & Recreation	**FIXED PICNIC TABLE - " RECTANGULAR"** **STD. DETAIL NO. 12 93 43.54**