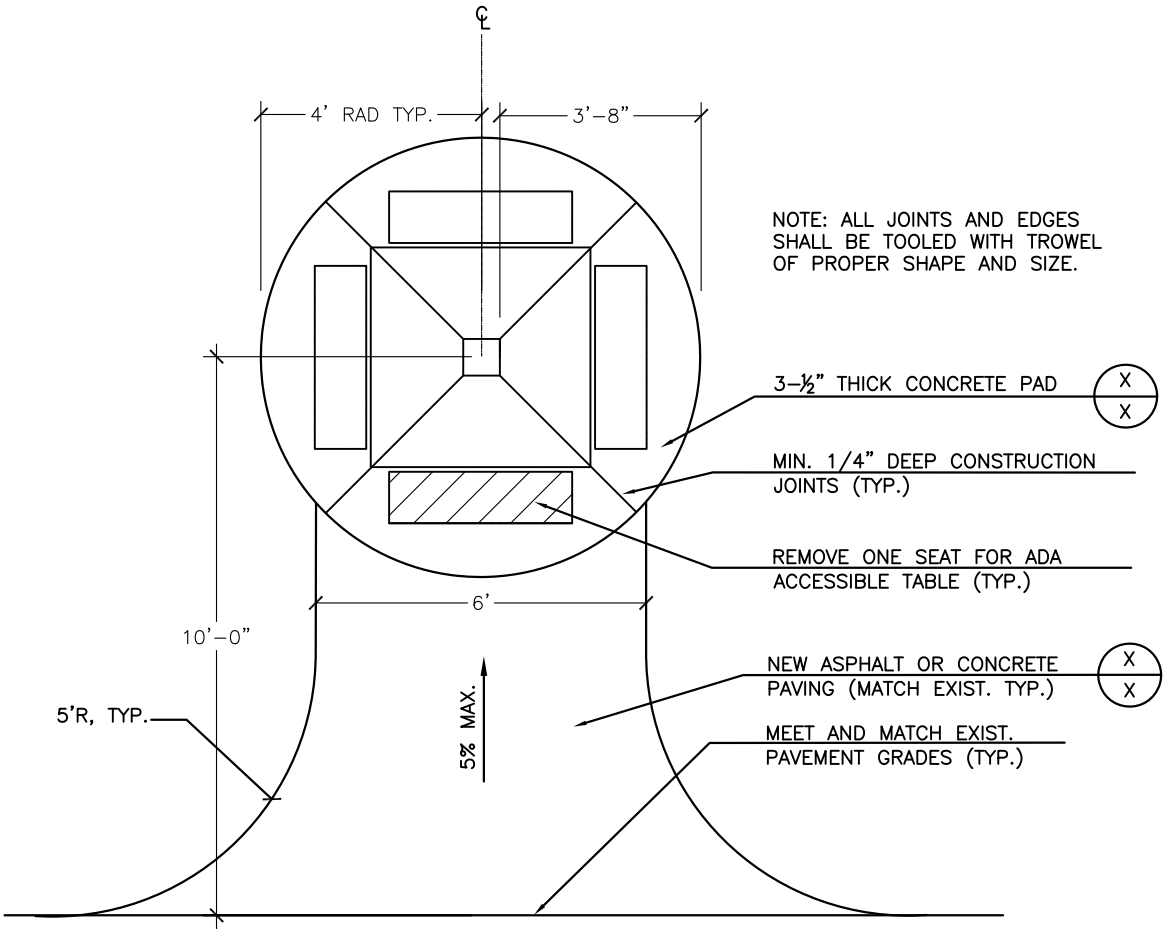

PLAN VIEW

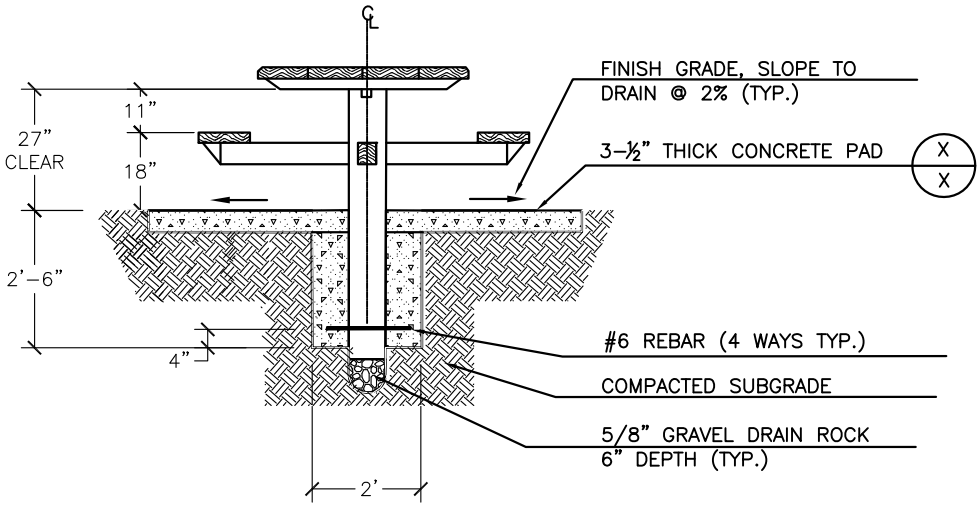

SECTION VIEW

City of Seattle Department of Parks & Recreation	**FIXED PICNIC TABLE - "MONSTER TABLE"** **STD. DETAIL NO. 12 93 43.53**