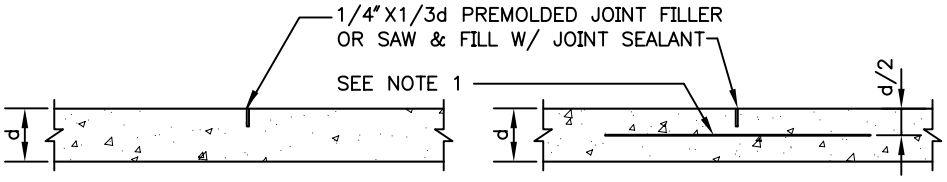

CONTRACTION JOINTS

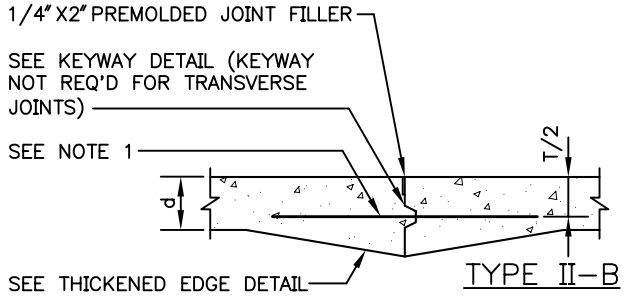

CONSTRUCTION JOINTS

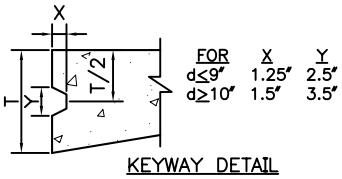

FOR	X	Y
d≤9"	1.25"	2.5"
d≥10"	1.5"	3.5"

KEYWAY DETAIL
FOR JOINTS WITH THICKENED EDGE T=d+3"
OTHERWISE T=d

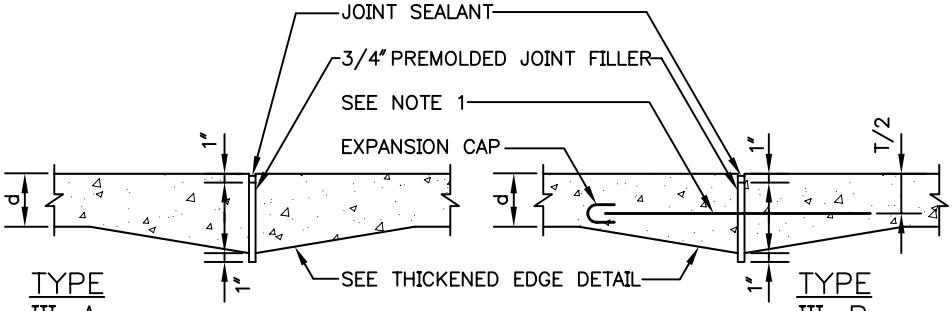

THROUGH JOINTS

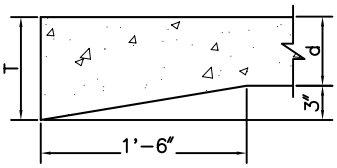

THICKENED EDGE DETAIL
(NOT NEEDED FOR TYPE A JOINTS WIDTH d≥10")
(NOT NEEDED FOR TYPE B JOINTS WIDTH d≥9")

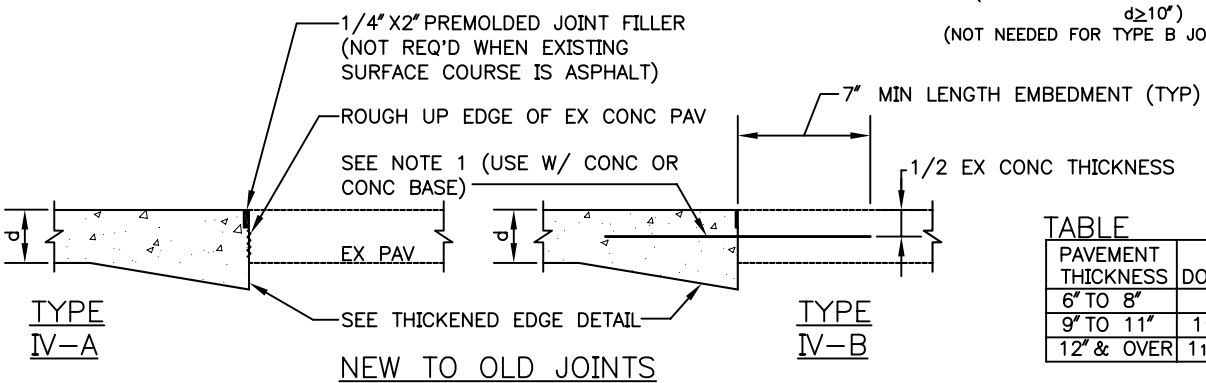

NEW TO OLD JOINTS

TABLE

PAVEMENT THICKNESS	DOWEL BAR SIZE
6" TO 8"	1" X18" @12"
9" TO 11"	1 1/4" X18" @12"
12" & OVER	1 1/2" X18" @12"

NOTES:

1. WHERE REQUIRED AT LONGITUDINAL JOINTS, TIE BARS SHALL BE 5/8" X2'–6" @ 3'–0", DEFORMED GRADE 40 OR BETTER, EPOXY COATED. WHERE REQUIRED AT TRANSVERSE JOINTS, DOWEL BARS SHALL BE SIZED AS SHOWN IN THE TABLE, SMOOTH ROUND GRADE 60 OR BETTER, EPOXY COATED AND GREASED
2. LONGITUDINAL JOINT SPACING SHOULD NOT EXCEED 15'–6" (TO BACK OF CURB). TRANSVERSE JOINT SPACE SHALL NOT EXCEED 15'–0". THE AREA OF THE PANEL SHALL NOT EXCEED 225 SQUARE FEET
3. JOINT OFFSETS AT RADIUS POINTS SHOULD BE AT LEAST 1'–6" LONG
4. JOINT INTERSECTION ANGLES OF LESS THAN 60 DEGREES SHALL BE USED
5. WHEN A JOINT IS CLOSER THAN 1'–0" TO A CASTING, THEN A MINOR ADJUSTMENT IN THE JOINT LOCATION SHOULD BE MADE BY SKEWING OR SHIFTING THE JOINT ALIGNMENT TO MEET THE CASTING AT 90° OR NORMAL TO THE CASTING.
6. WHERE POSSIBLE, LONGITUDINAL JOINTS SHOULD MATCH LANE MARKINGS
7. LONGITUDINAL JOINTS ARE TO BE CONSTRUCTION JOINTS UNLESS PAVED BY MACHINE CAPABLE OF PLACING AND FINISHING CONCRETE FOR TWO OR MORE PANEL WIDTHS (IN WHICH CASE A CONTRACTION JOINT IS ALLOWED)
8. DOWEL BARS SHALL NOT BE PLACED WITHIN 1'–0" OF THE EDGE OF PAVEMENT OR A PARALLEL JOINT

City of Seattle
Department of Parks & Recreation

COS CONCRETE PAVING - JOINTS

STD. DETAIL NO. 32 16 43