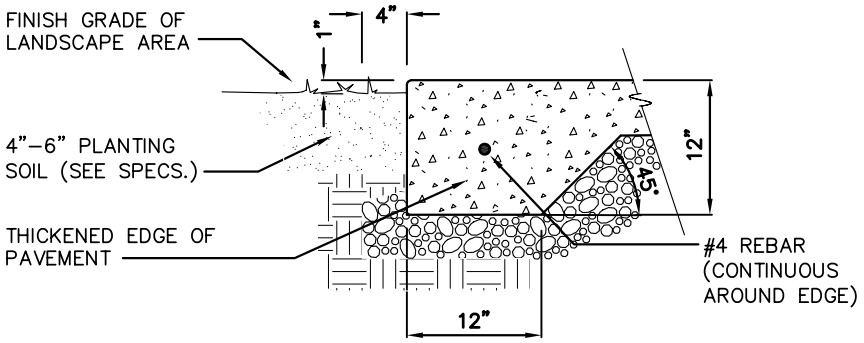

CONCRETE PAVING THICKENED EDGE DETAIL

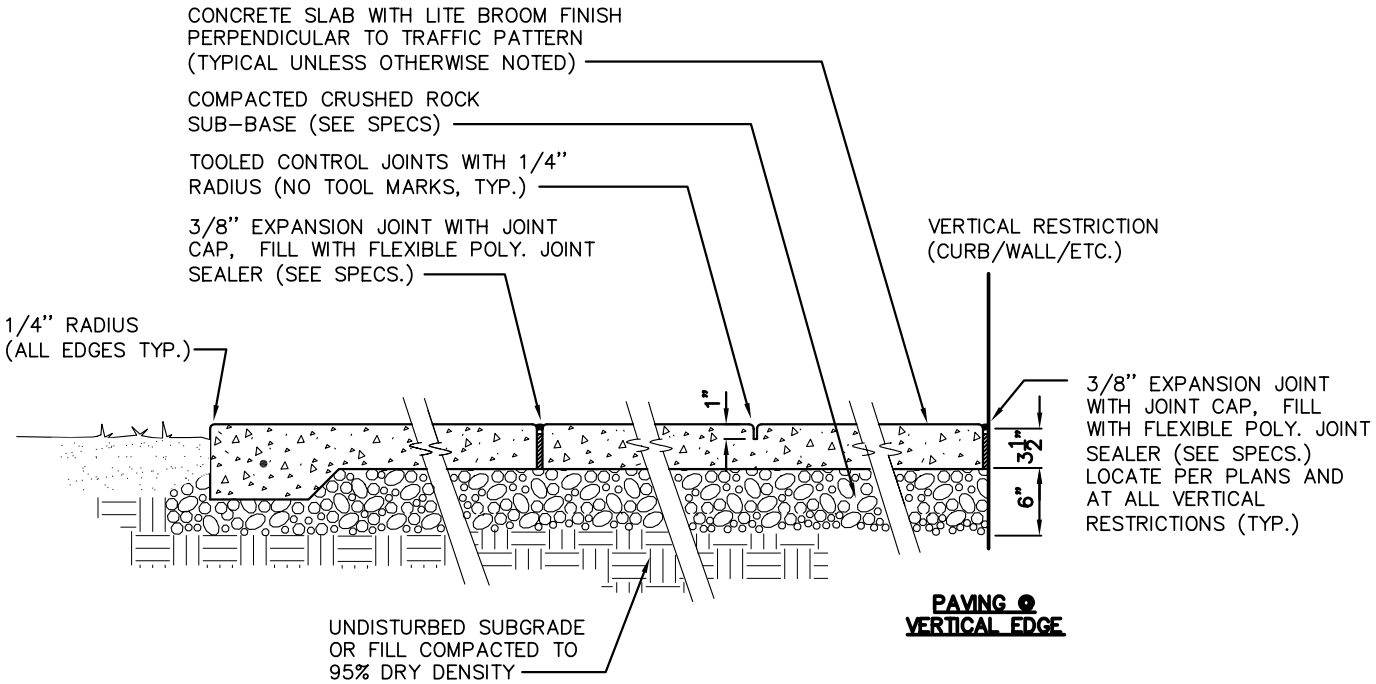

PAVING @ VERTICAL EDGE

CONCRETE PAVING & JOINTS DETAIL

City of Seattle Department of Parks & Recreation	**CONCRETE PAVING WITH THICKENED EDGE & JOINTS DETAIL** **STD. DETAIL NO. 32 13 76**