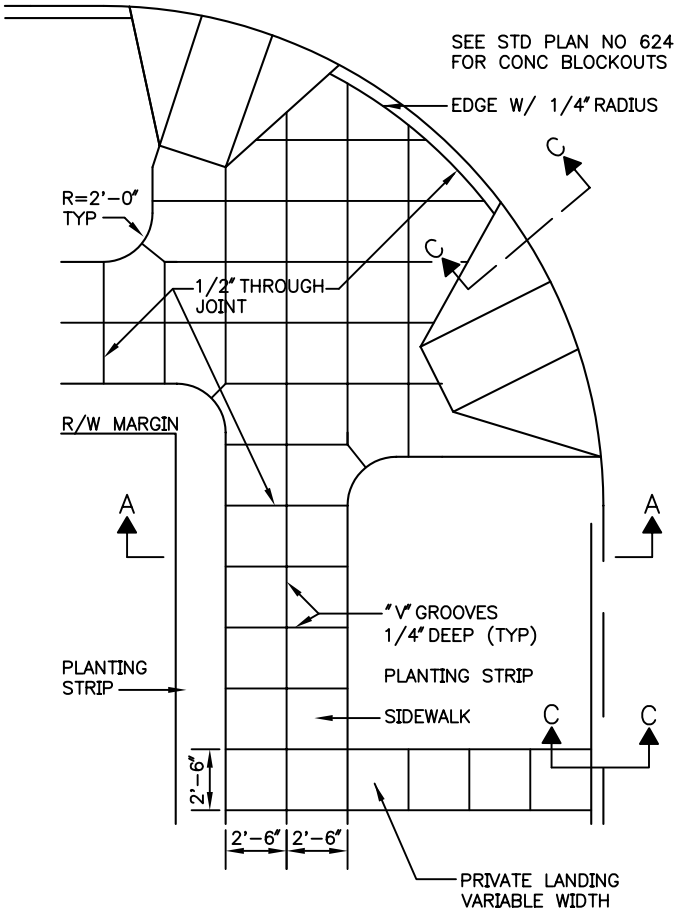

SIDEWALK
5'-0" WIDE

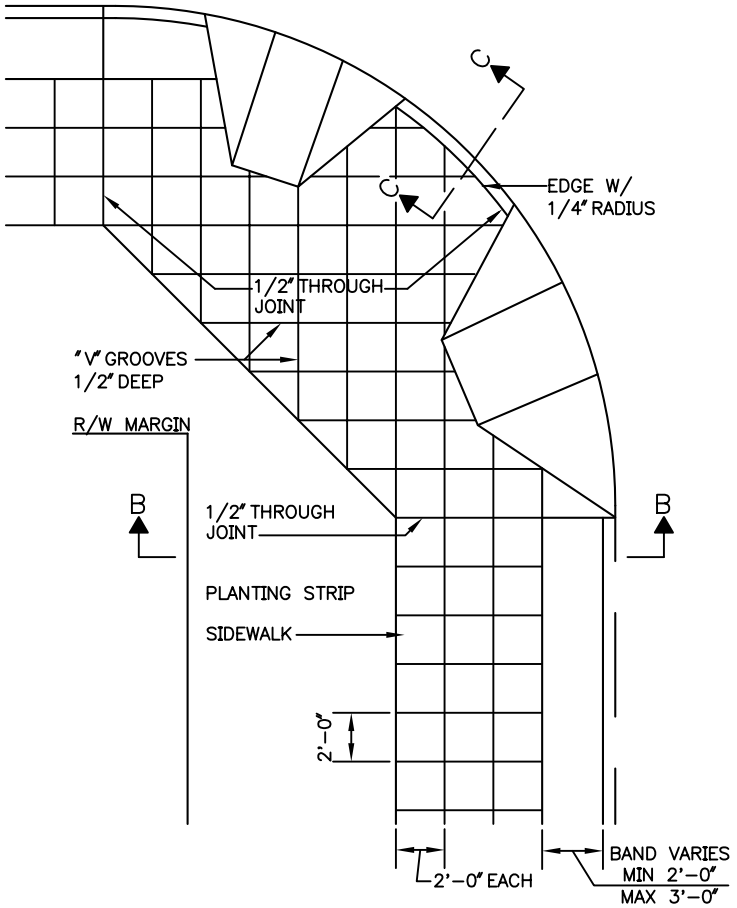

SIDEWALK
GREATER THAN
5'-0" WIDE

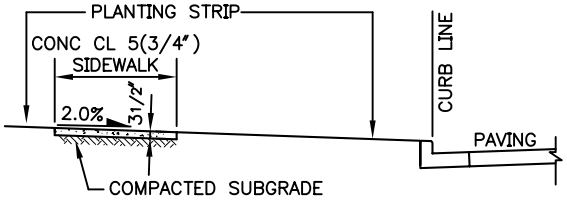

SECTION A–A

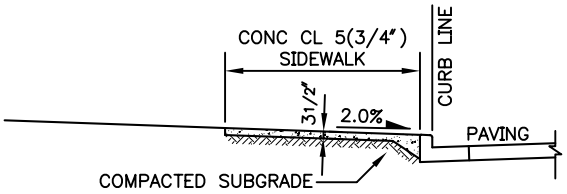

SECTION B–B

NOTES:

1. WHEN PLANTING STRIP PAVEMENT IS APPROVED, JOINT MATERIAL WILL BE REQUIRED AT THE PERIMETER OF THE PLANTING STRIP PAVEMENT
2. WHEN EXISTING PARKING METERS ARE TO BE REMOVED FOR NEW SIDEWALK CONSTRUCTION, CONTACT SEATTLE TRANSPORTATION A MINIMUM OF 2 WORKING DAYS PRIOR TO SCHEDULED WORK TO COORDINATE REMOVAL OF METER HEADS

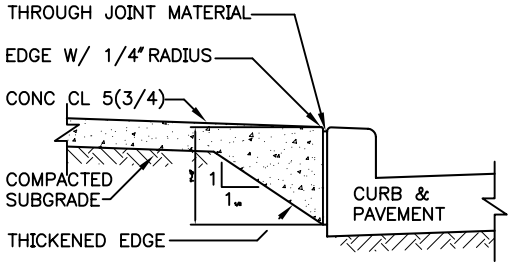

SECTION C–C

City of Seattle Department of Parks & Recreation	COS CONCRETE SIDEWALK & RAMPS STD. DETAIL NO. 32 16 36