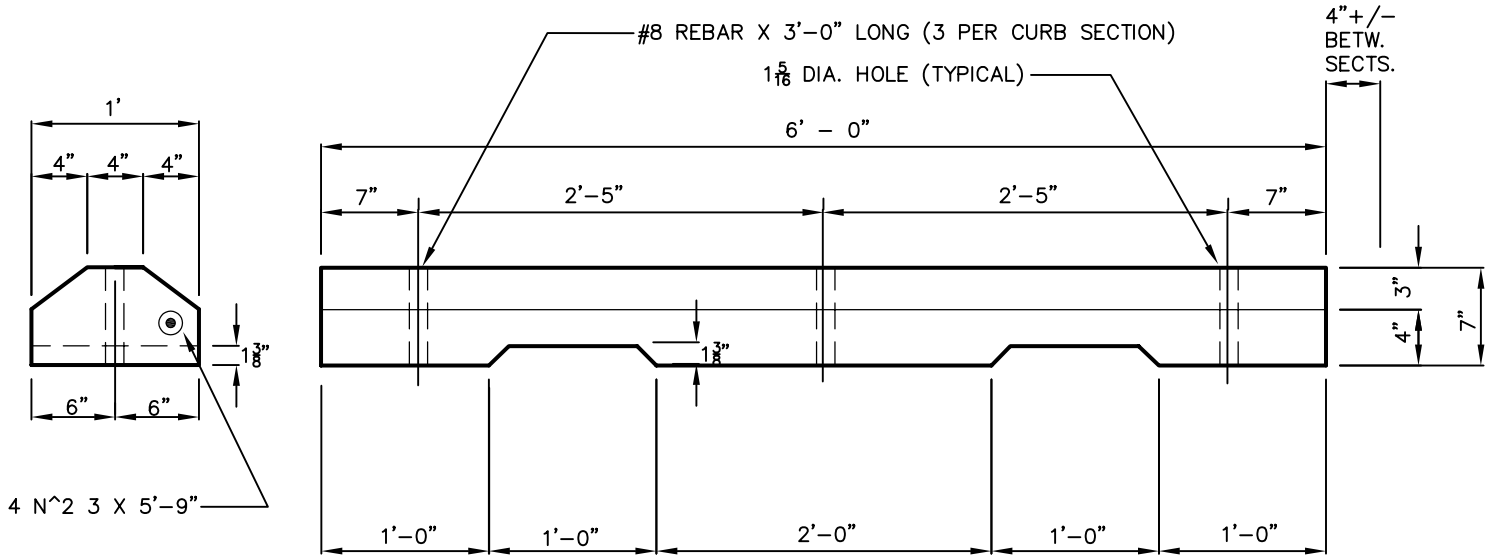

NOTE: AVAILABLE FROM RENTON CONCRETE PRODUCTS OR UTILITY VAULT COMPANY.

City of Seattle Department of Parks & Recreation	**CONCRETE WHEELSTOP DETAILS** **STD. DETAIL NO. 32 17 13.19**