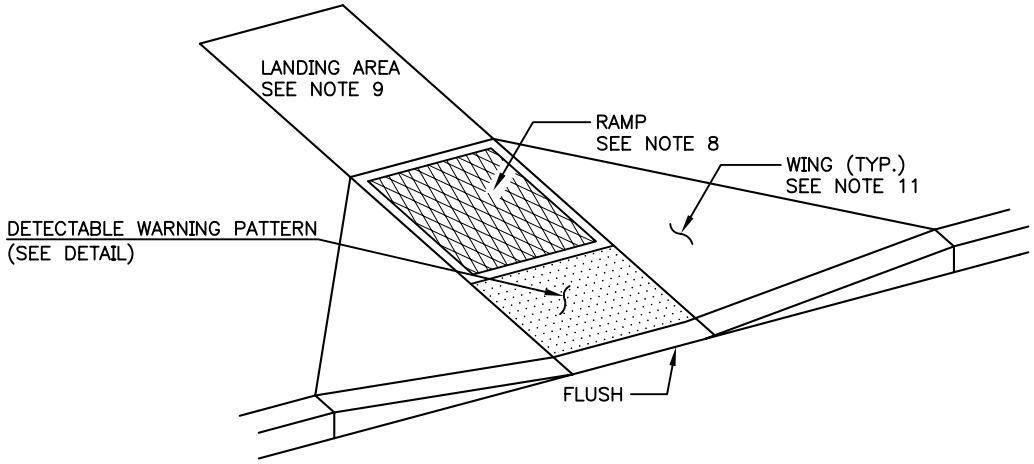

DETECTABLE WARNING
PATTERN DETAIL
TRUNCATED DOMES

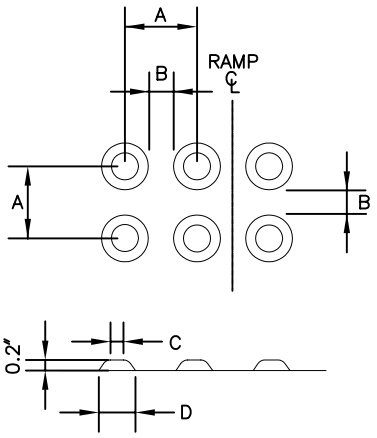

	MIN.	MAX.
A	1.6 "	2.4 "
B	0.65 "	1.5 "
C	50% TO 65% OF D	
D	0.9 "	1.4 "

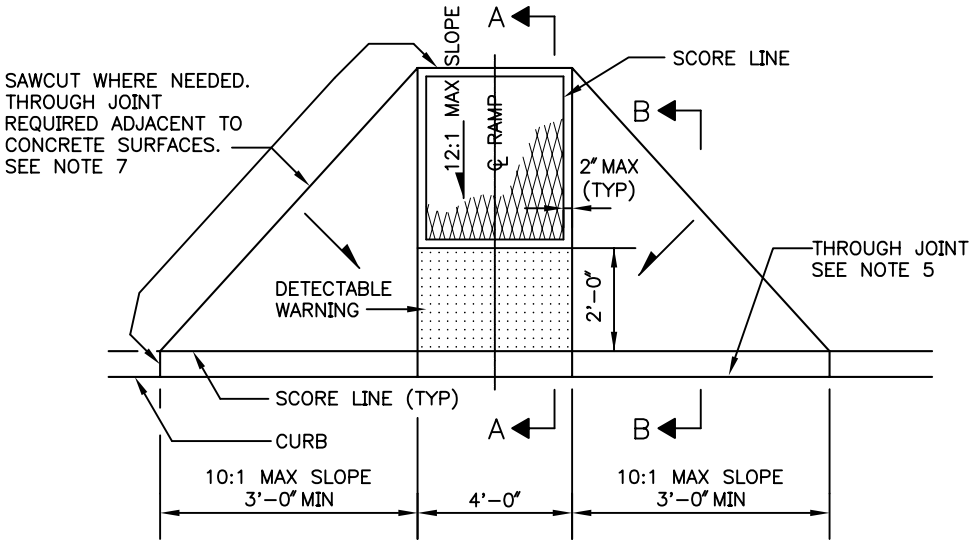

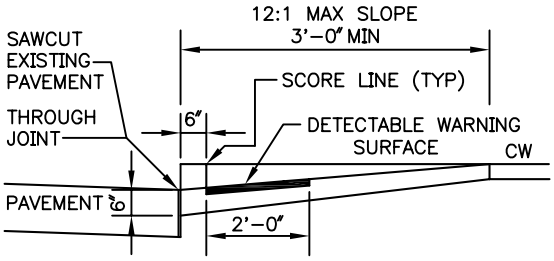

SECTION A–A

CURB MONOLITHIC WITH RAMP.
NEW PAVEMENT BLOCKED OUT FULL DEPTH.
EXISTING PAVEMENT REMOVED AT FACE OF CURB

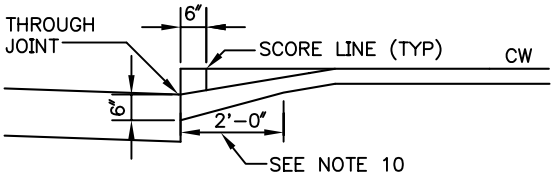

SECTION B–B

NOTES:

1. TWO CURB RAMPS SHALL BE INSTALLED AT EACH CORNER UNLESS DIRECTED OTHERWISE BY SDOT.
2. CURB RAMPS SHALL BE CONSTRUCTED WITH COMPANION RAMPS ON OPPOSITE SIDES OF THE STREET UNLESS DIRECTED OTHERWISE BY SDOT
3. WHERE CURB IS INSTALLED AT A LOCATION WITH NO SIDEWALK, CURB SHALL BE DEPRESSED FOR FUTURE CURB RAMP INSTALLATION.
4. TYPE 422a CURB RAMP SHALL BE USED. HOWEVER IF NOT FEASIBLE, THEN TYPE 422b CURB RAMP MAY BE INSTALLED WITH THE APPROVAL OF SDOT
5. NEW PAVEMENT SHALL BE BLOCKED OUT FULL DEPTH. EXISTING PAVEMENT SHALL BE REMOVED AT THE FACE OF THE CURB.
6. MIN DISTANCE BETWEEN ADJACENT CURB RAMPS SHALL BE 3'–0".
7. CURB RAMPS SHALL BE ISOLATED FROM ALL OTHER CONCRETE BY THROUGH JOINTS.
8. RAMPS SHALL HAVE A COARSE TEXTURED SURFACE OBTAINED WITH A 3/4" 9–11 FLATTENED EXPANDED METAL MESH BEING PRESSED INTO THE STILL FRESH CONCRETE. THE LONG AXIS OF THE DIAMOND PATTERN SHALL BE ALIGNED WITH THE SLOPE OF THE RAMP.
9. ADDITIONAL SIDEWALK PAVING MAY BE NECESSARY IN THE PLANTING STRIP OR AT THE BACK OF SIDEWALK TO ACCOMODATE ACCESS TO THE RAMP. A MINIMUM 4'–0"x5'–0" 2% MAX. GRADE LANDING SHALL BE PROVIDED AT THE TOP OF RAMP ON TYPE 422a.
10. THE SIDEWALK THICKENED EDGE SHALL BE CONTINUED THROUGH BOTH WINGS ON TYPE 422a AND BOTH RAMPS ON TYPE 422b. SEE STD. PLAN NO 420.
11. THE WINGS ON TYPE 422a SHALL HAVE A SLIGHTLY BRUSHED FINISH PARALLEL TO THE CURB.
12. MIN LATERAL CLEARANCE FROM INLETS, POLES, HYDRANTS AND OTHER ABOVE GROUND OBSTACLES SHALL BE 1'–0" FROM THE SCORED OR DETECTABLE WARNING PORTION OF THE CURB RAMP.
13. INLETS SHALL BE SO LOCATED THAT GUTTER FLOW DOES NOT FLOW PAST THE CURB RAMP.
14. DECTECTABLE WARNING SURFACE SHALL BE YELLOW, IN COMPLIANCE WITH SECTION 8–14.3 OF THE SPECIAL PROVISIONS OF COS STDS. & SHALL BE LOCATED WITHIN 6 TO 8 INCHES OF THE CURB FACE.

City of Seattle
Department of Parks & Recreation

COS ADA CONCRETE CURB RAMP -TYPE 422a

STD. DETAIL NO. 32 16 23