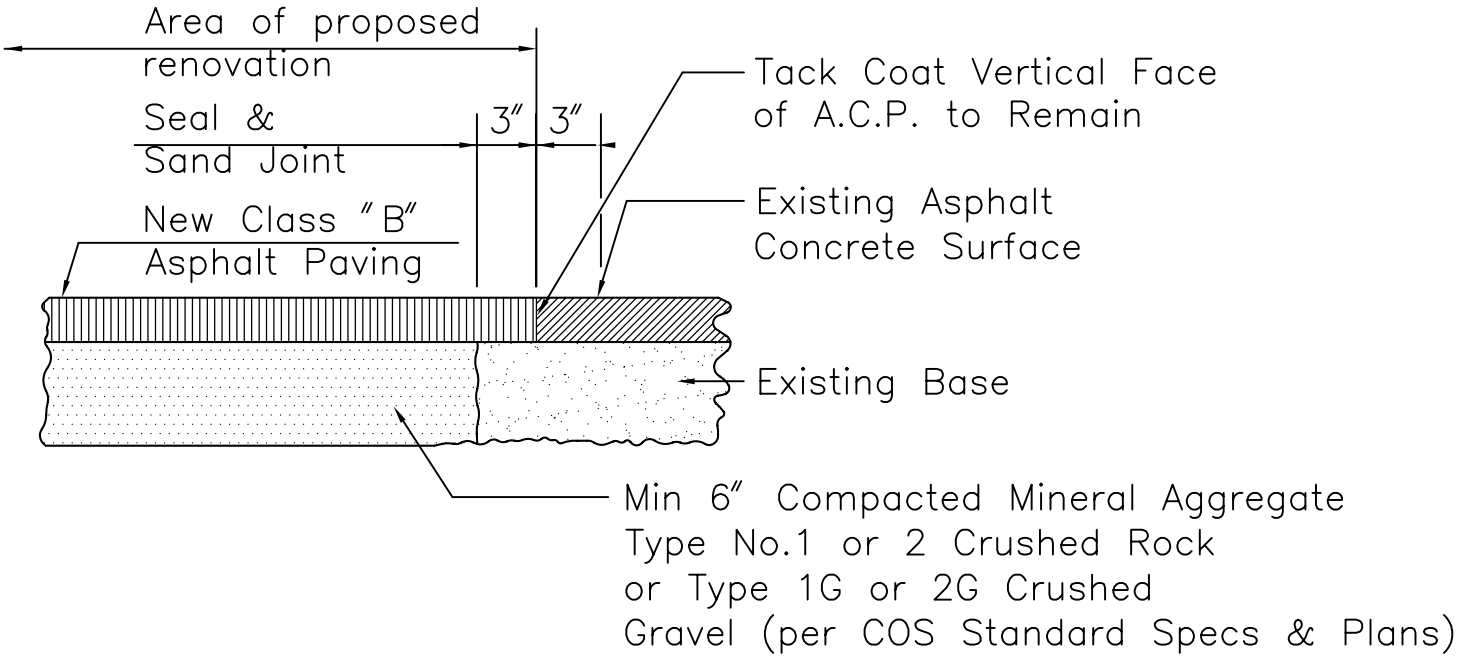

City of Seattle Department of Parks & Recreation	**ASPHALT PAVEMENT PATCHING DETAIL** **STD. DETAIL NO.** 32 12 19