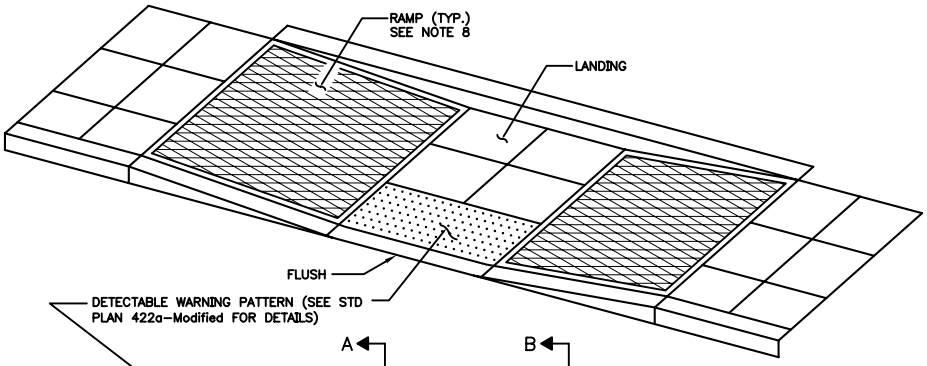

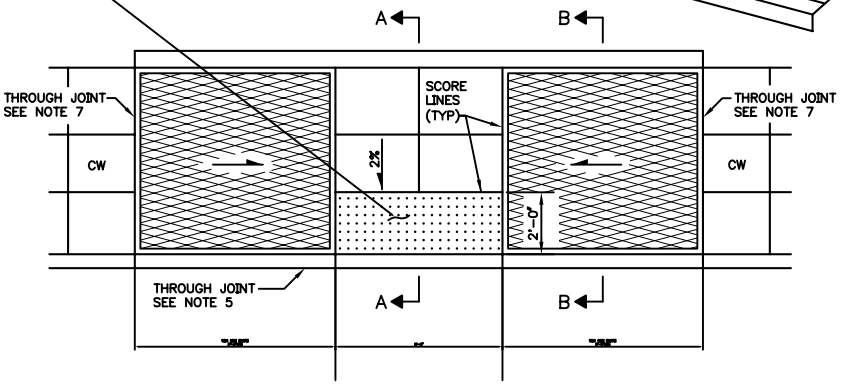

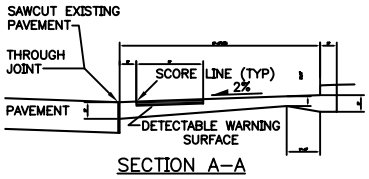

SECTION A–A

CURB MONOLITHIC WITH RAMP. NEW PAVEMENT BLOCKED OUT FULL DEPTH. EXISTING PAVEMENT REMOVED AT FACE OF CURB.

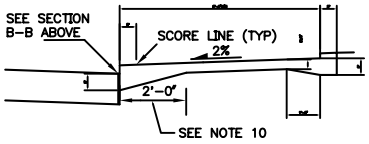

SECTION B–B

NOTES:

1. TWO CURB RAMPS SHALL BE INSTALLED AT EACH CORNER UNLESS OTHERWISE DIRECTED BY SEATTLE TRANSPORTATION
2. CURB RAMPS SHALL BE INSTALLED ON THE OPPOSITE SIDE OF THE STREET FROM ANY RAMP BEING CONSTRUCTED
3. CURBS SHALL BE DEPRESSED FOR FUTURE CURB RAMPS WHERE CURBS ARE INSTALLED WITH NO SIDEWALKS
4. THE DESIGNER SHALL USE TYPE 422a CURB RAMPS. IF NOT FEASIBLE, THEN ALTERNATE CURB RAMP TYPE 422a MAY BE INSTALLED WITH THE APPROVAL OF SDOTN
5. NEW PAVEMENT SHALL BE BLOCKED OUT FULL DEPTH. EXISTING PAVEMENT SHALL BE REMOVED AT THE FACE OF THE CURB
6. THE SIDEWALK THICKENED EDGE SHALL BE CONTINUED THROUGH THE RAMPS OF TYPE 422a CURB RAMPS
7. FOR ADDITIONAL REQUIREMENTS AND CONDITIONS REFER TO STD PLAN NO 422a AND THE AMERICAN WITH DISABILITIES ACT

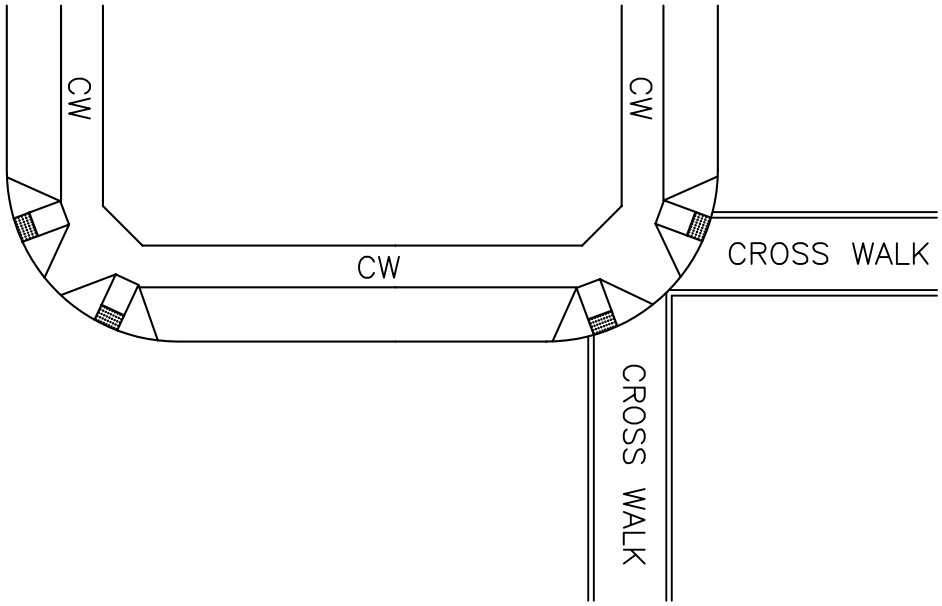

City of Seattle Department of Parks & Recreation	**COS ADA CONCRETE CURB RAMP - TYPE 422b** **STD. DETAIL NO. 32 16 26**