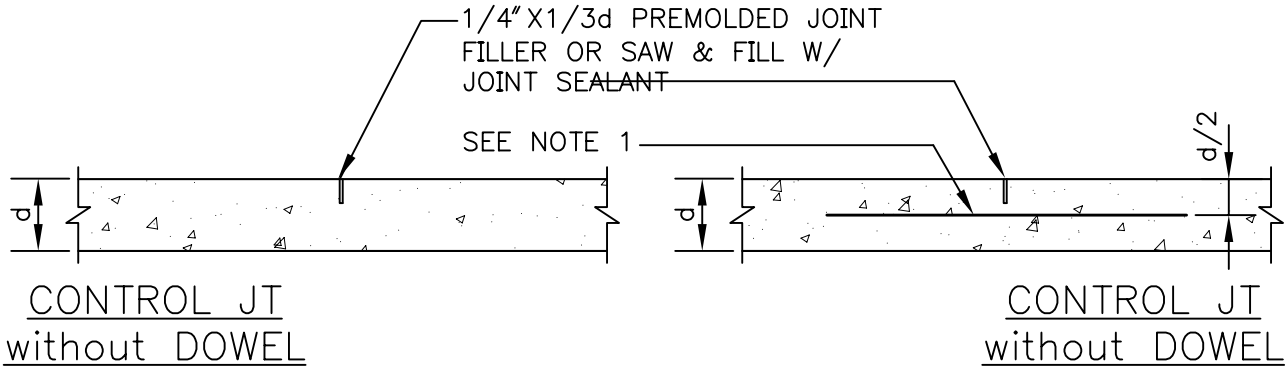

CONTRACTION (CONTROL) JOINTS

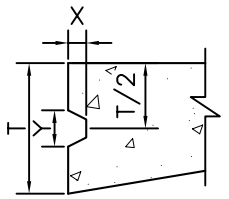

FOR	X	Y
d≤9"	1.25"	2.5"
d≥10"	1.5"	3.5"

KEYWAY DETAIL

FOR JOINTS WITH THICKENED EDGE T=d+3"
OTHERWISE T=d

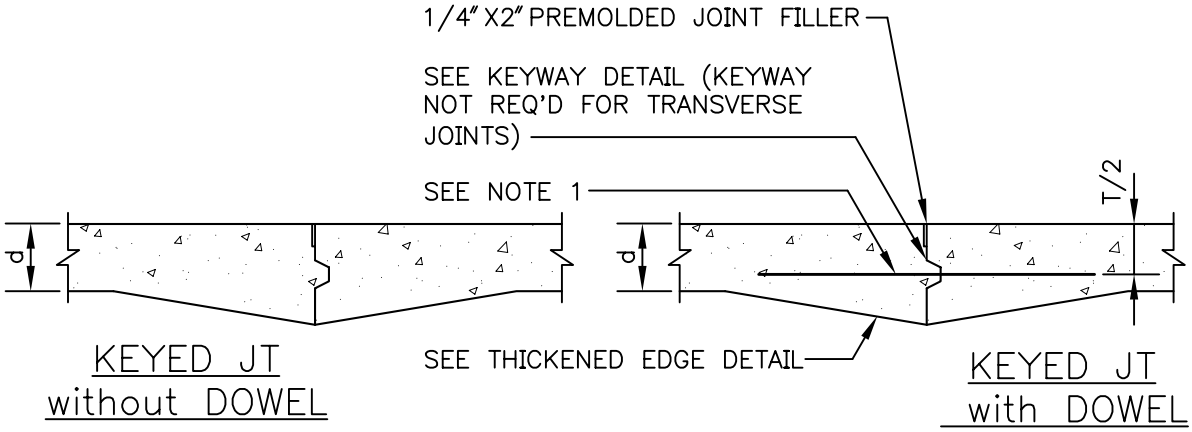

CONSTRUCTION JOINTS

City of Seattle Department of Parks & Recreation	**COS CONCRETE PAVING JOINTS** **STD. DETAIL NO. 32 16 46**