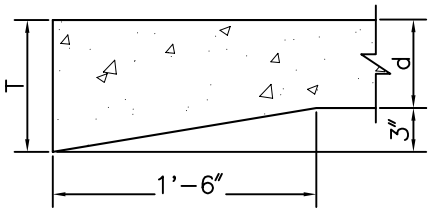

THICKENED EDGE DETAIL
(NOT NEEDED FOR TYPE A JOINTS WIDTH d≥10")
(NOT NEEDED FOR TYPE B JOINTS WIDTH d≥9")

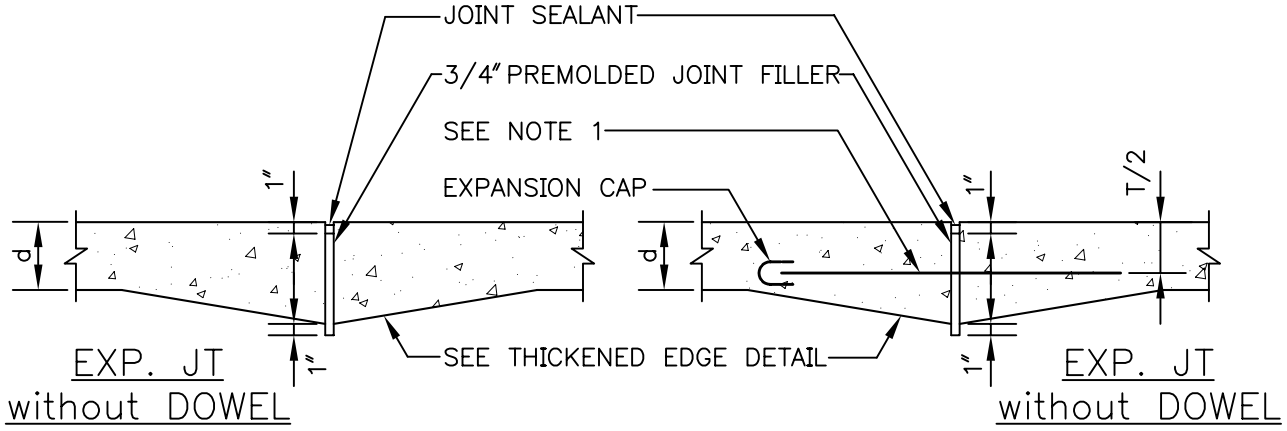

THROUGH (EXPANSION) JOINTS

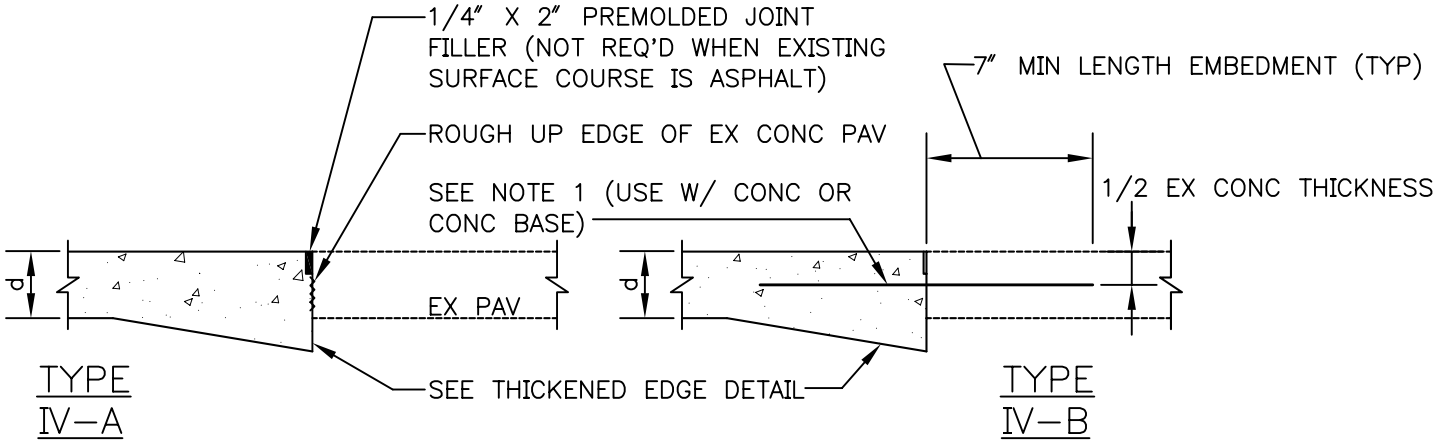

NEW TO OLD JOINTS

City of Seattle Department of Parks & Recreation	**COS CONCRETE PAVING JOINTS** **STD. DETAIL NO. 32 16 49**