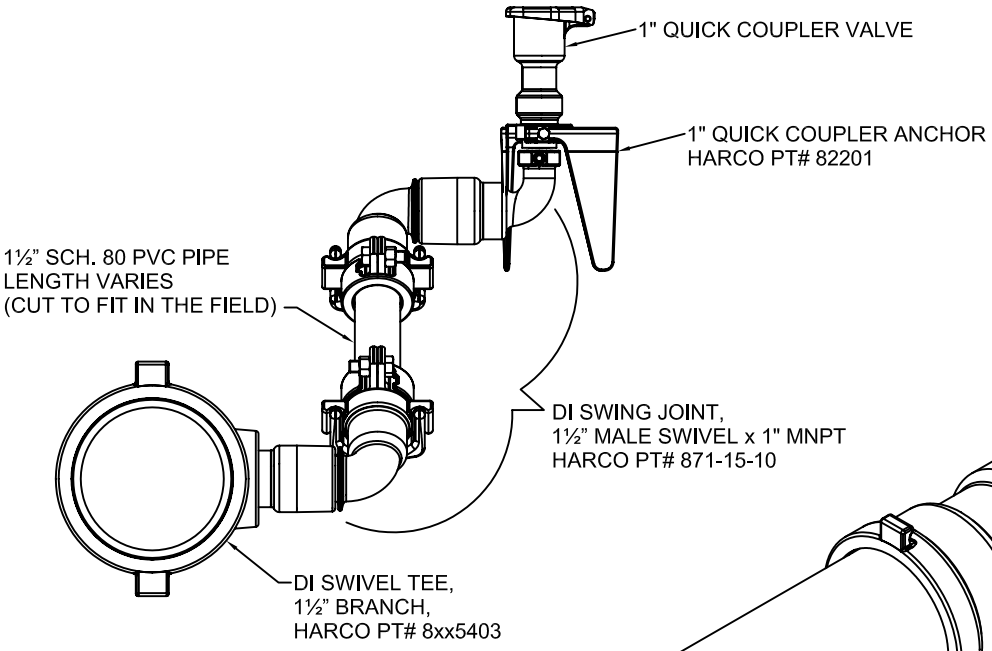

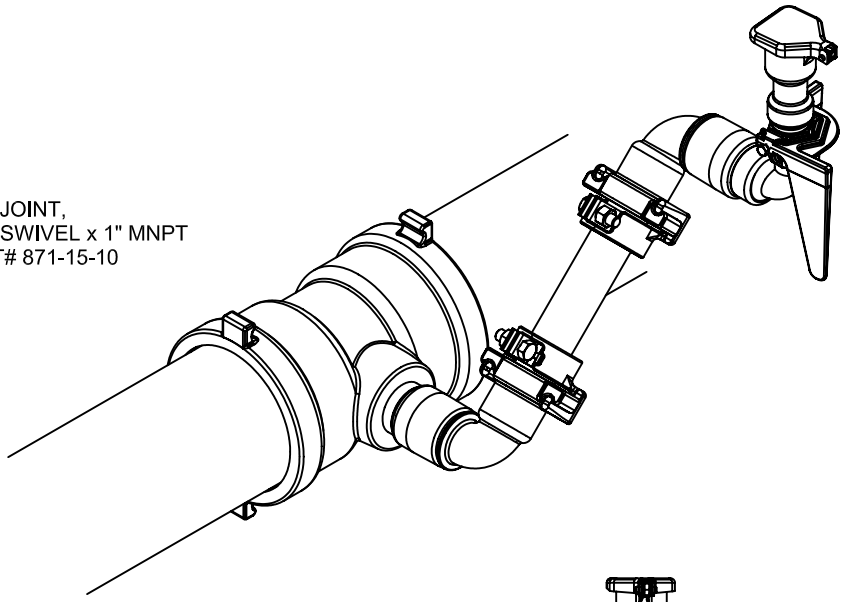

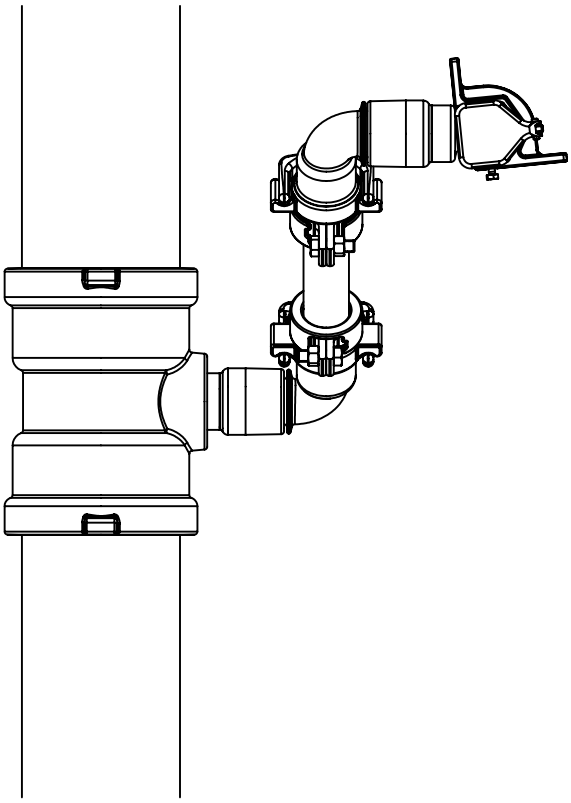

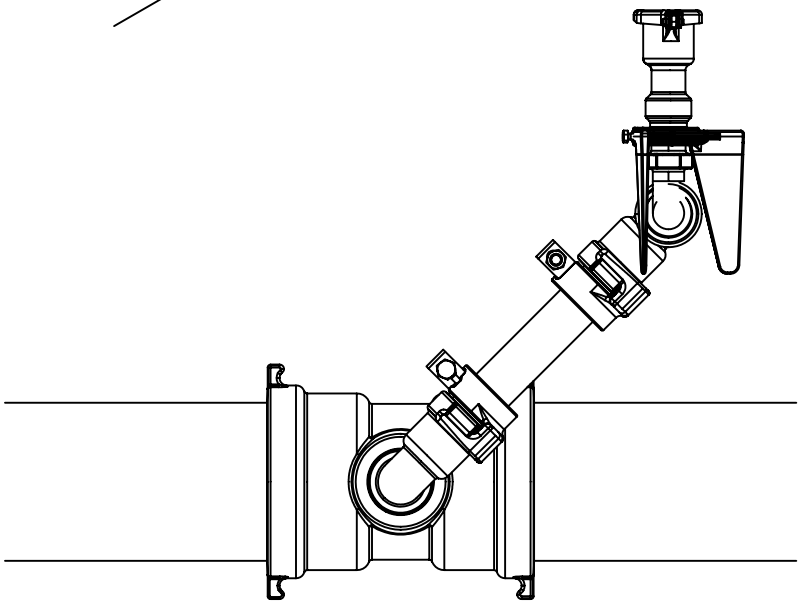

City of Seattle Department of Parks & Recreation	**DUCTILE IRON SWING JOINT FOR QUICK COUPLER VALVES DETAILS** **STD. DETAIL NO. 32 84 26.13**