(A) IRRIGATION CONTROL PANEL LEGEND:

1. STRONGBOX ENCLOSURE
2. ALUMINUM PANEL (BOLTED TO BACK WALL OF BOX)
3. HYBRID CONTROLLER: RAINBIRD ESP *MC, SITE, W OR SAT-XX-XXXX (EDIT - EXACT TYPE OF CONTROLLER & # OF STATIONS VARIES BY PROJECT).*
4. TERMINAL BOX WITH TERMINAL STRIPS.
5. RAINBIRD FLOW MONITOR.
6. PUMP CONTACTOR (OPTIONAL IF REQUIRED)
7. LEVITON 5280-W, GFI OUTLET.
8. 12" ENCLOSURE EXTENSION (TYP.)
9. PRE-FABRICATED CONCRETE PEDESTIAL BASE #CB-323218
10. DATAREMOTE DIGITAL CELLULAR COMMUNICATION UNIT (#CDS-9022-1X-V) WITH DOMED TOP ANTENNA & CABLE
11. MIN. 2" CONDUIT FOR STATION CONTROL WIRES
12. GROUND WIRE CONNECTS FROM GROUND LUG TO GROUNDING BUSS IN CONTROLLER (TYP.)
13. GROUND LUG (RUN WIRE FROM GROUND LUG TO GROUNDING ROD GRID TYP.)
14. TRC COMMANDER REMOTE TRANSMITTERS (2 UNITS PER PROJECT TYP.)
15. PULSE DECODER (OPTIONAL IF REQUIRED)

(B) METER / LOAD CENTER PANEL LEGEND:

16. 200 AMP METER BASE REQUIRED BY CITY LIGHT (ALIGN METER WITH WINDOW TYP.)
17. SIEMENS LOAD CENTER, #E0816ML1125SCU - 8/16, W/125A, WITH 8 SPACES & 16 CIRCUITS, 4- QP MAX. 2-POLES, 14-3/4"X12-3/8"X3-7/8", (WITH BACK-FED MAIN BREAKER TYP.)
18. PHOTOCELL BYPASS SWITCH (OPTIONAL IF REQUIRED)
19. LIGHTING CONTACTOR (OPTIONAL IF REQUIRED)

ENCLOSURE CABINET & PANEL NOTES:

1. STRONG BOX CABINET - #SB-24CR-120V.
2. COLD ROLLED STEEL CONSTRUCTION
3. POWDER COATED DARK GREEN COLOR
4. TWO LOUVERED VENTS ON EACH SIDE
5. REMOVABLE EQUIPMENT MOUNTING PANELS
6. CABINET BOLTED TO A PREFABRICATED CONCRETE BASE
7. HINGED METER VIEWING WINDOW WITH REINFORCED GLASS
8. CONTROL CABINET, PREFABRICATED CONCRETE BASE, IRRIGATION CONTROLLER, TERMINAL STRIPS, SURGE PROTECTION, & PANEL ASSEMBLY AVAILABLE FROM UNITED PIPE AND SUPPLY *(MODEL # IT-ICC-SBMC12MB-RP).*

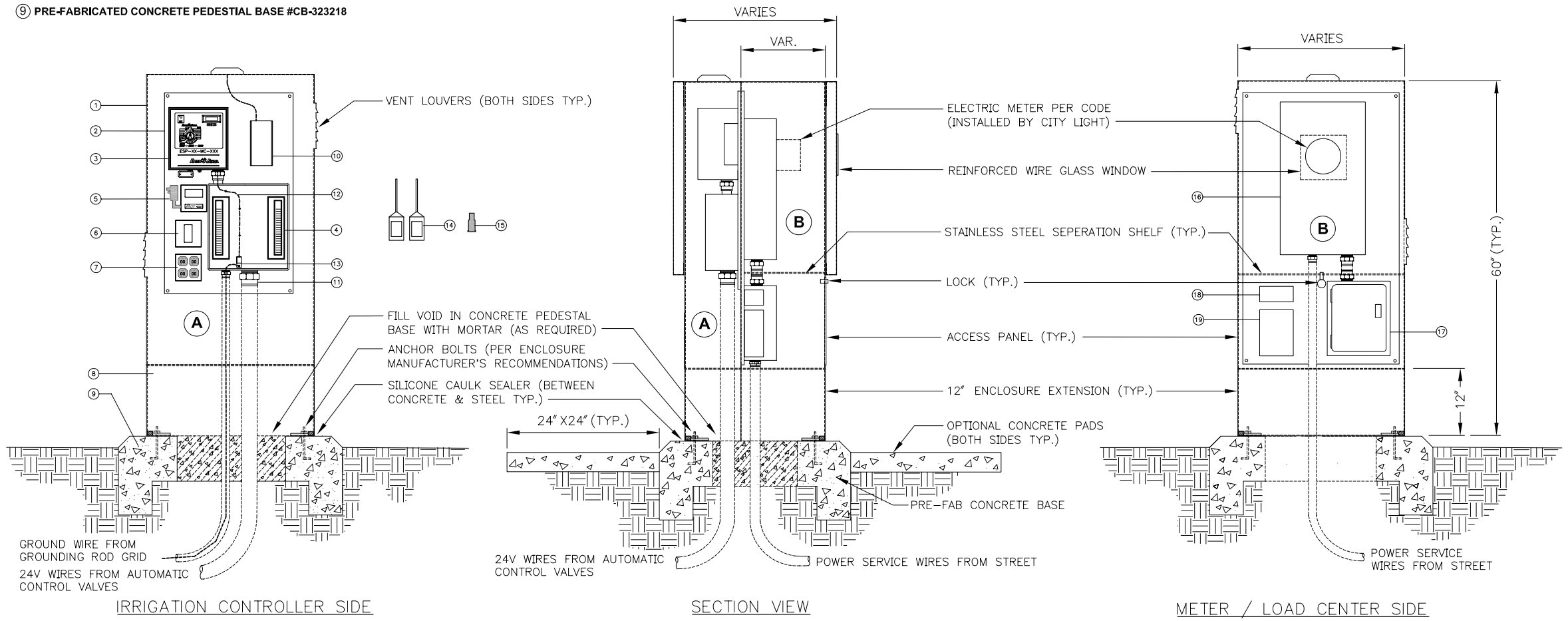

1 POWER DROP WITH METER & IRRIGATION CONTROLLER ENCLOSURE DETAILS
NOT TO SCALE

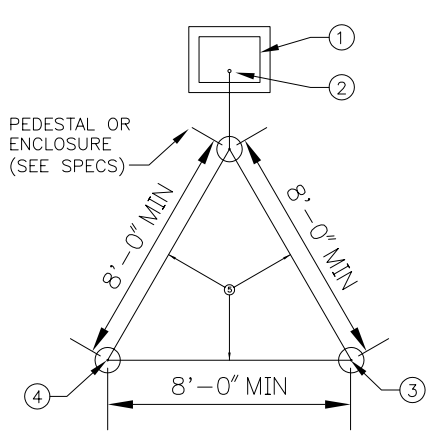

GROUND ROD GRID LAYOUT

GROUNDING LEGEND

1. CONTROLLER AND/OR CLUSTER CONTROL UNIT (CCU)
2. #10 AWG SOLID BARE COPPER WIRE FROM GROUNDING ROD TO GROUND LUG ON CONTROLLER (OR CCU). MAKE WIRE AS SHORT AS POSSIBLE.
3. COVER GROUNDING ROD WITH 6" ROUND VALVE BOX
4. 5/8"X8'-0" COPPER CLAD GROUNDING RODS. INSTALL RODS IN SOIL IN A TRIANGULAR PATTERN, SPACED 8'-0"MIN APART. GROUNDING GRID SHALL HAVE A RESISTANCE OF 10 OHMS OR LESS.
5. #10 AWG BARE COPPER WIRE BETWEEN GROUNDING RODS (TYP.).
6. BRASS WIRE CLAMP (USE SEPARATE CLAMP FOR EACH WIRE).
7. FINISH GRADE.

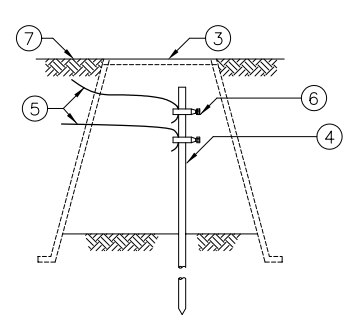

GROUND ROD ASSEMBLY

2 GROUNDING ROD GRID DETAILS
NOT TO SCALE

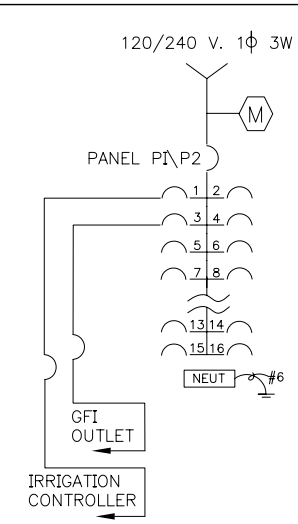

ONE LINE DIAGRAM

PANEL SCHEDULE

NO.____ LOCATION: PEDESTAL PANEL — 120/240___ VOLTS ___1___ PHASE ___3___ WIRE
SERVING: IRRIGATION, PUMP, LIGHTING CONTROLS — 100___ AMP WITH MAIN___ BREAKER

CKT NO.	LOAD DESCRIPTION	KVA	TRIPS AMPS			TRIPS AMPS	KVA	LOAD DESCRIPTION	CKT NO.
1	IRRIGATION CONTROLLER	1.0	20			XX		SPARE	2
3	GFIC OUTLET		20			XX		SPARE	4
5	SPARE		20			XX		SPARE	6
7	SPARE		20			XX		SPARE	8
9	SPACE ONLY		XX			XX		SPACE ONLY	10
11	SPACE ONLY		XX			XX		SPACE ONLY	12
13	SPACE ONLY		XX			XX		SPACE ONLY	14
15	SPACE ONLY		XX			XX		SPACE ONLY	16

REMARKS:_____ CONNECTED LOAD:___1.0___KVA___10___AMPS
DEMAND LOAD:_100%_KVA_____AMPS

SYMBOL KEY

TC	– ELECTRONIC TIME CLOCK – TORK Z400
PE	– PHOTOCELL 105–285 V. 1800 VA. MOUNT ON CHANNEL MARKER SHELTER
	– SWITCH 15 A. 120V.
	– DUPLEX RECEPTACLE SS COVER 20A. 120V.
LC–1	– 3P30A ELECTRICALLY HELD LIGHTING CONTRACTOR WITH 120 V. COIL.
	– HOA SWITCH – INTERGRAL IN TIME CLOCK

3 ONE LINE DIAGRAM, PANEL SCHEDULE & SYMBOL KEY
NOT TO SCALE

>>>>CAUTION - CALL 811<<<<
UTILITY NOTIFICATION CENTER BEFORE YOU DIG!
WWW.CALLBEFOREYOUDIG.ORG

NOT LESS THAN 2 OR MORE THAN 10 BUSINESS DAYS PRIOR TO COMMENCING EXCAVATION OR DEMOLITION, SECURE THE SERVICES OF A COMMERCIAL UNDERGROUND UTILITIES LOCATOR SERVICE TO IDENTIFY BELOW-GROUND IMPROVEMENTS THAT MAY NOT BE INDICATED ON THE DRAWINGS. ADDITIONALLY, TO REQUEST ON-SITE UNDERGROUND UTILITY SYSTEMS LOCATES, CALL **SPR INSPECTION REQUEST LINE @ (206) 684-7034.** REFER TO SECTIONS 02100 & 02120 OF THE SPECIFICATIONS FOR INSTRUCTIONS ON HOW TO PROCEED.

NO.	REVISION – AS BUILT	DATE
3		
2		
1		

REVIEWED: PARK ENGINEER ____ DATE ____

All work done in accordance with the City of Seattle Standard Plans and Specifications in effect on the date shown above, and supplemented by Special Provisions.

STAMP

SEATTLE PARKS AND RECREATION

FACILITY NAME

PROJECT NAME

IRRIGATION CONTROLLER ENCLOSURE DETAILS

DESIGNED XX — DATE DATE
DRAWN XX
CHECKED XX — SHEET X OF X
ORDINANCE NO. X
CONTRACT NO. X — **Sht. No.**
SCALE AS SHOWN