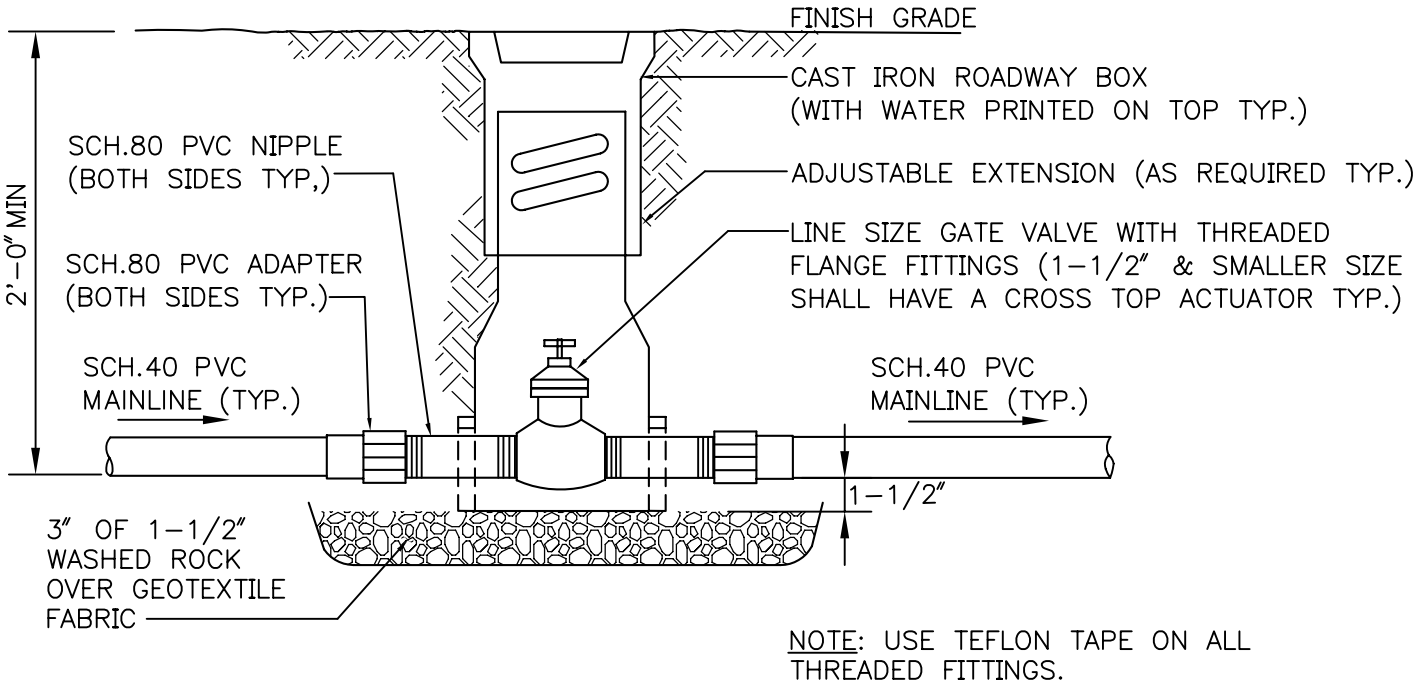

GATE VALVE (1-1/2" & SMALLER)

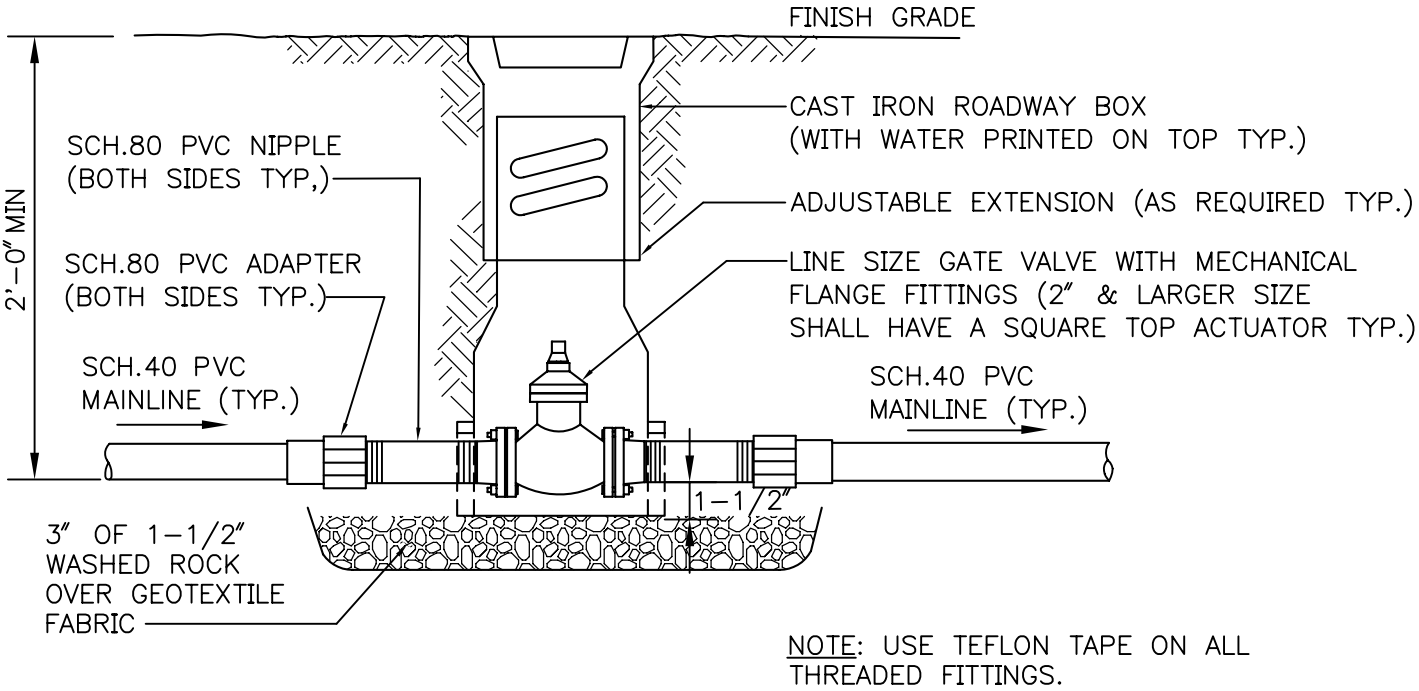

GATE VALVE (2" & LARGER)

City of Seattle Department of Parks & Recreation	**GATE VALVE DETAILS (FOR PVC PIPE)** **STD. DETAIL NO. 32 84 23.26**