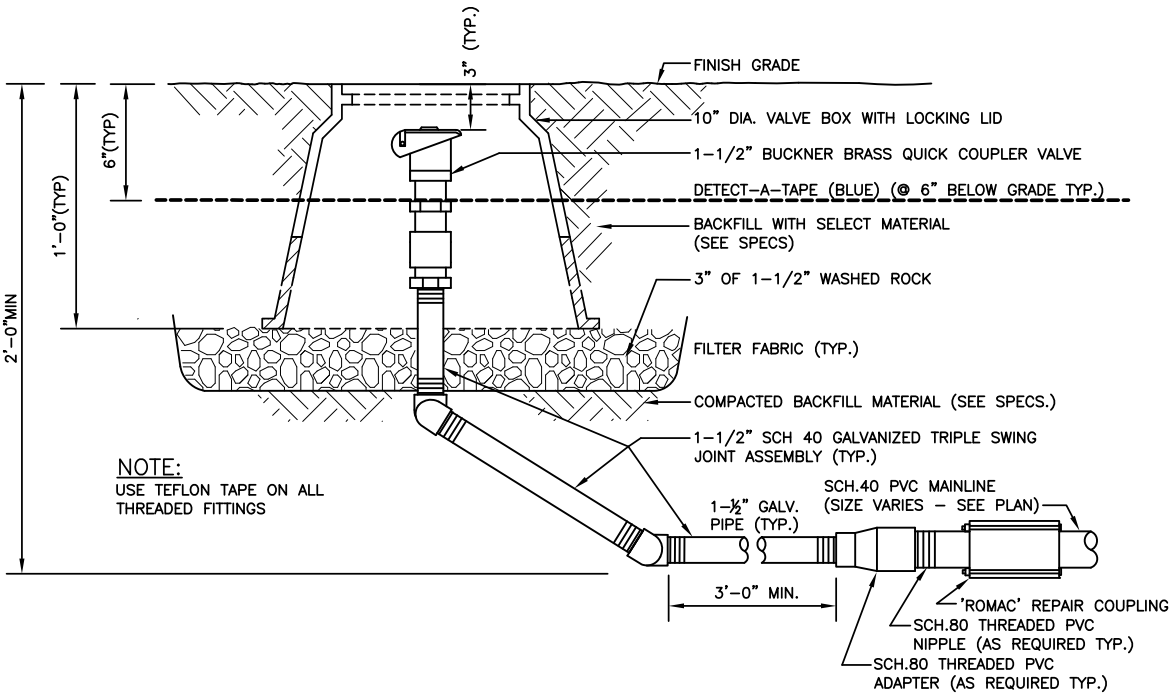

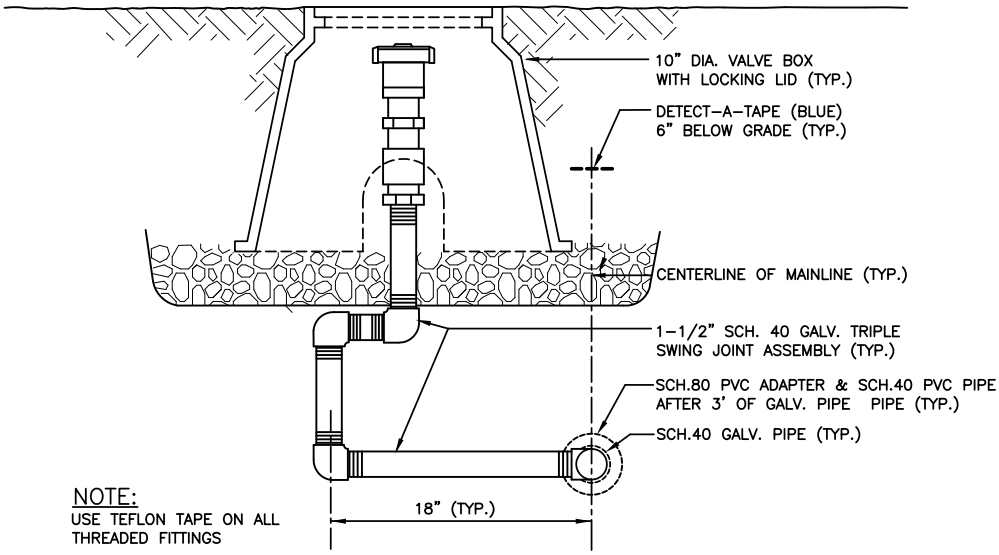

QUICK COUPLER VALVE
FOR BALLFIELD INFIELDS
BEHIND PITCHER'S RUBBER

City of Seattle Department of Parks & Recreation	**QUICK COUPLER VALVE (FOR BALLFIELDS)** **STD. DETAIL NO. 32 84 23.16**