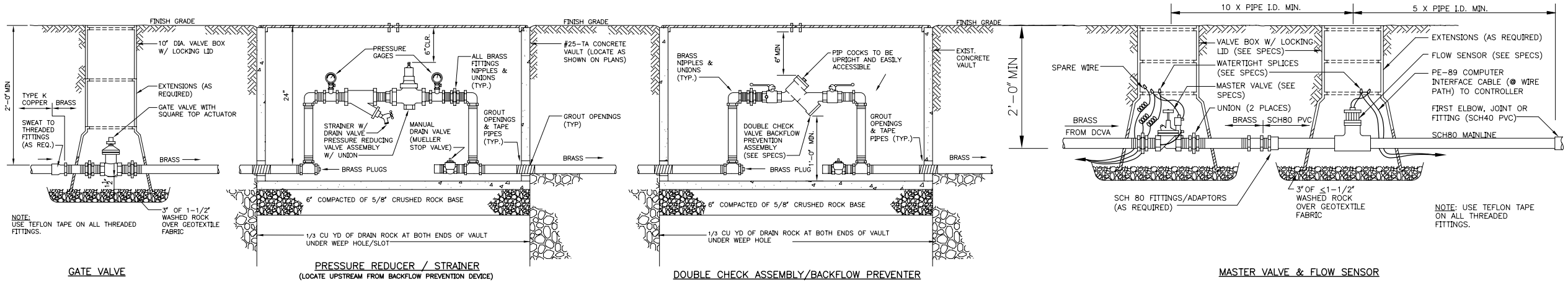

1 POINT OF CONNECTION DETAIL
NOT TO SCALE

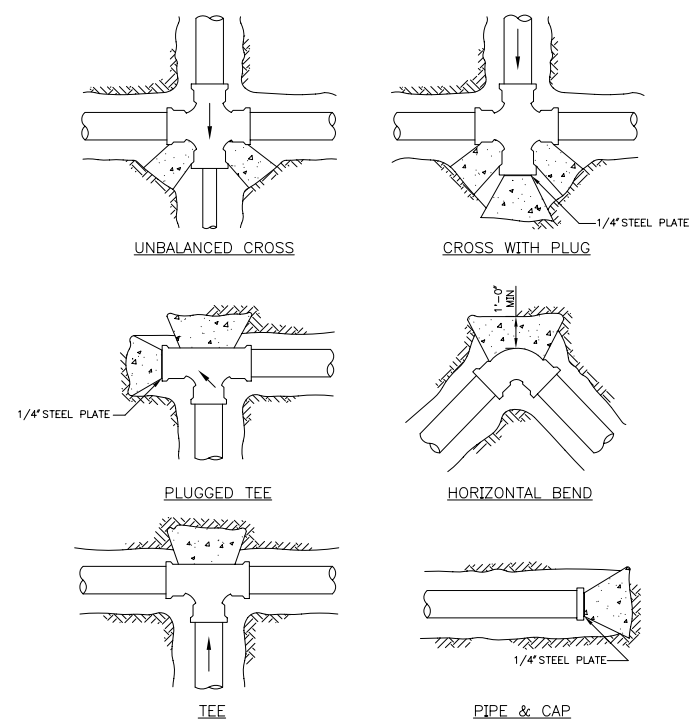

THRUST BLOCK AREA IN SQUARE FEET (SEE STD PLAN NO 331b)										
	SOIL	FIRM SILT OR FIRM SILTY SAND			COMPACT SAND			COMPACT SAND & GRAVEL		
	FITTING	90° BEND	TEE 45°BEND CAP OR PLUG	11¼° & 22½° BEND	90° BEND	TEE 45°BEND CAP OR PLUG	11¼° & 22½° BEND	90° BEND	TEE 45°BEND CAP OR PLUG	11¼° & 22½° BEND
PIPE SIZE	4"	7.0	4.2	1.7	2.9	2.1	1.0	2.2	1.6	1.0
	6"	13.3	9.4	3.8	6.7	4.7	1.9	5.0	3.5	1.4
	8"	23.3	16.7	6.7	11.7	8.4	3.4	8.8	6.3	2.5
	12"	53.0	37.5	15.0	26.5	18.8	7.5	20.0	14.0	5.6
AREAS CALCULATED ON 300 PSI TEST PRESSURE AND 3'-0" MIN COVER OVER WATERMAIN										

ECOLOGY BLOCKS, PER STD PLAN NO 460, MAY BE USED IN LIEU OF POURED-IN-PLACE BLOCKING FOR FITTINGS IN SHADED PORTION OF TABLE

FOR NOTES SEE STD PLAN NO 331b

NO SCALE

NOTES:
1. LOCATION AND SIZE OF BLOCKING FOR PIPE LARGER THAN 12" DIAMETER AND FOR SOIL TYPES DIFFERENT THAN SHOWN SHALL BE DETERMINED BY THE ENGINEER UNLESS SPECIFIED OTHERWISE IN THE PROJECT MANUAL
2. ALL BLOCKING FOR HORIZONTAL FITTINGS (POURED IN PLACE) SHALL BEAR AGAINST UNDISTURBED NATIVE GROUND
3. ALL POURED THRUST BLOCKS SHALL BE IN PLACE AND SUFFICIENT TIME SHALL BE ALLOWED FOR THE CONCRETE TO CURE AND TRENCH SHALL BE BACKFILLED AND COMPACTED PRIOR TO PRESSURE TESTING
4. ALL BLOCKING TO BE CONCRETE CL 5 (11/2)
5. BLOCKING AGAINST FITTINGS SHALL BEAR AGAINST THE GREATEST FITTING SURFACE AREA POSSIBLE, BUT SHALL NOT COVER OR ENCLOSE BELL ENDS, JOINT BOLTS OR GLANDS
6. ALL HORIZONTAL BLOCKING THRUST AREAS SHALL BE CENTERED ON PIPE
7. WHERE POURED-IN-PLACE BLOCKING IS REQUIRED AT A POINT OF CONNECTION TO AN EXISTING WATERMAIN, THE BLOCKING SHALL BE INSTALLED PRIOR TO CONNECTION, AND SPACE BETWEEN FITTING AND BLOCKING GROUTED, SIMILAR TO ECOLOGY BLOCK DETAIL
8. TEMPORARY BLOCKING, IF USED, SHALL BE APPROVED BY ENGINEER

2 WATERMAIN THRUST BLOCKING HORIZONTAL FITTINGS
NOT TO SCALE

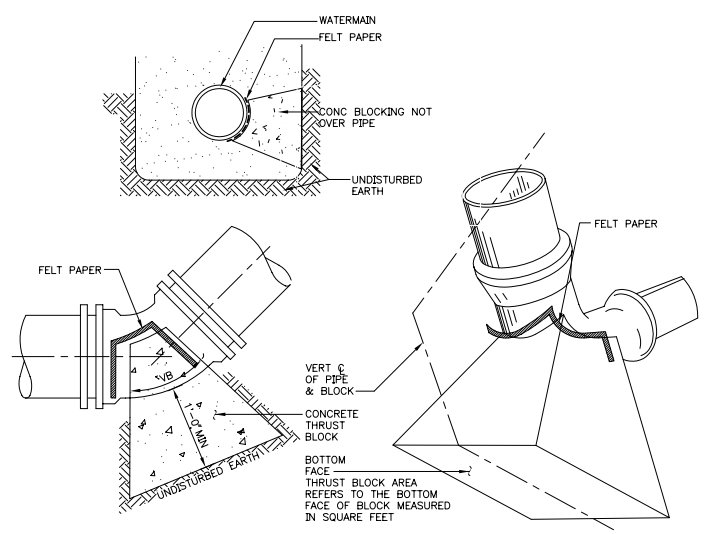

TYPE "C" BLOCKING FOR 11¼°, 22½°, 45° AND 90° VERTICAL BENDS THRUST BLOCK AREA IN SQUARE FEET										
	SOIL	FIRM SILT OR FIRM SILTY SAND			COMPACT SAND			COMPACT SAND & GRAVEL		
	FITTING	90° BEND	TEE 45°BEND & DEAD END	11¼° & 22½° BEND	90° BEND	TEE 45°BEND & DEAD END	11¼° & 22½° BEND	90° BEND	TEE 45°BEND & DEAD END	11¼° & 22½° BEND
PIPE SIZE	4"	5.8	4.2	1.7	2.9	2.1	1.0	2.2	1.6	1.0
	6"	13.3	9.4	3.8	6.7	4.7	1.9	5.0	3.5	1.4
	8"	23.3	16.7	6.7	11.7	8.4	3.4	8.8	6.3	2.5
	12"	53.0	37.5	15.0	26.5	18.8	7.5	20.0	14.0	5.6
AREAS CALCULATED ON 300 PSI TEST PRESSURE AND 3'-0" MIN COVER OVER WATERMAIN										

NOTES:
1. LOCATION AND SIZE OF BLOCKING FOR PIPE LARGER THAN 12" DIAMETER AND FOR SOIL TYPES DIFFERENT THAN SHOWN SHALL BE DETERMINED BY THE ENGINEER UNLESS SPECIFIED OTHERWISE IN THE PROJECT MANUAL.
2. ALL BLOCKING FOR VERTICAL FITTINGS (POURED IN PLACE) SHALL BEAR AGAINST UNDISTURBED NATIVE GROUND
3. ALL POURED THRUST BLOCKS SHALL BE IN PLACE AND SUFFICIENT TIME SHALL BE ALLOWED FOR THE CONCRETE TO CURE AND TRENCH SHALL BE BACKFILLED AND COMPACTED PRIOR TO PRESSURE TESTING
4. ALL BLOCKING SHALL BE CONCRETE CL 5 (1½)
5. AFTER INSTALLATION, SHACKLE RODS & TURNBUCKLES SHALL BE CLEANED AND COATED WITH 2 COATS OF ASPHALTIC VARNISH, ROYSTON ROYKOTE #612M OR APPROVED EQUAL
6. SHACKLE RODS SHALL BE FUSION BONDED EPOXY COATED ROUND MILD STEEL, ASTM A-36, WITH THREADS ON ENDS ONLY
7. BLOCKING AGAINST FITTINGS SHALL BEAR AGAINST THE GREATEST FITTING SURFACE AREA POSSIBLE, BUT SHALL NOT COVER OR ENCLOSE BELL ENDS, JOINT BOLTS OR GLANDS

5 WATERMAIN THRUST BLOCKING VERTICAL FITTINGS
NOT TO SCALE

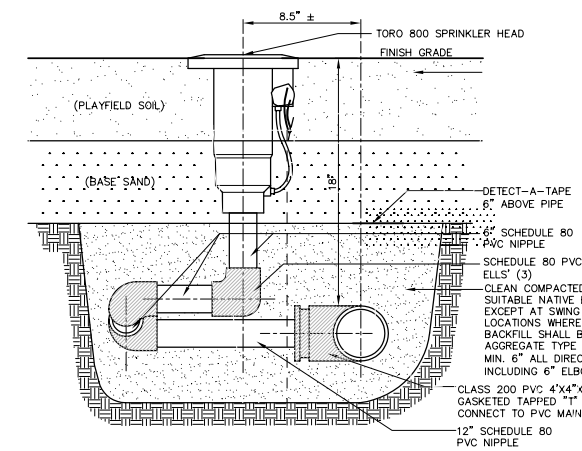

4 TORO 800 HEAD WITH TRIPLE SWING JOINT
NOT TO SCALE

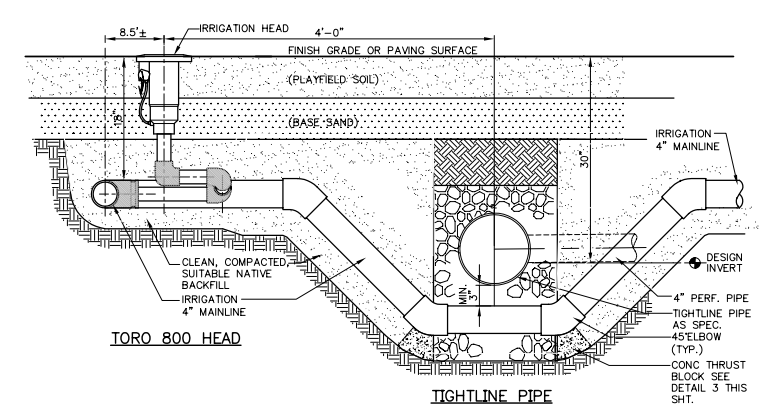

7 IRRIGATION MAINLINE OFFSET AT TIGHTLINE DRAIN PIPE
NOT TO SCALE

>>>>CAUTION - CALL 811<<<<
UTILITY NOTIFICATION CENTER BEFORE YOU DIG!
WWW.CALLBEFOREYOUDIG.ORG

NOT LESS THAN **2** OR MORE THAN **10** BUSINESS DAYS PRIOR TO COMMENCING EXCAVATION OR DEMOLITION, SECURE THE SERVICES OF A COMMERCIAL UNDERGROUND UTILITIES LOCATOR SERVICE TO IDENTIFY BELOW-GROUND IMPROVEMENTS THAT MAY NOT BE INDICATED ON THE DRAWINGS. ADDITIONALLY, TO REQUEST ON-SITE UNDERGROUND UTILITY SYSTEMS LOCATES, CALL **SPR INSPECTION REQUEST LINE @ (206) 684-7034.** REFER TO SECTIONS 02100 & 02120 OF THE SPECIFICATIONS FOR INSTRUCTIONS ON HOW TO PROCEED.

NO.	REVISION – AS BUILT	DATE
3		
2		
1		

REVIEWED: PARK ENGINEER DATE

All work done in accordance with the City of Seattle Standard Plans and Specifications in effect on the date shown above, and supplemented by Special Provisions.

SEATTLE PARKS AND RECREATION

FACILITY

PROJECT NAME

BIG PIPE DETAILS

DESIGNED X
DRAWN X
CHECKED X
DATE X
SHEET X OF X
ORDINANCE NO. X
CONTRACT NO. X
SCALE X

Sht. No.