NOTES:

1. 'SKYLINE' NEMA 3R RAINPROOF ENCLOSURE.
2. 12 GA PRE-GALVANIZED STEEL WELDED SEAM CONSTRUCTION.
3. TWO SCREENED, GASKETED LOUVERED VENTS
4. REMOVABLE EQUIPMENT MOUNTING PANEL.
5. VANDALPROOF LOCKABLE SLIDE BAR ACROSS FRONT DOOR(S).
6. PADMOUNT DESIGN WITH 2" INSIDE FLANGE ON BOTTOM.
7. DOOR:
   3 POINT LATCH, CONCEALED HINGE, LIFT-OFF TYPE (UPON OPENING) CLOSED CELL NEOPRENE GASKET.
8. PAINT:
   OVEN BAKED ENAMEL, DARK GREEN OUTSIDE, WHITE INSIDE PREGALVANIZED METAL TREATED WITH COPPER SULFATE PRIOR TO PAINTING.
9. ACTUAL CABINET DIMENSIONS ARE PROJECT SPECIFIC AND WILL BE SPECIFIED ON THE PLANS AND/OR SPECS.

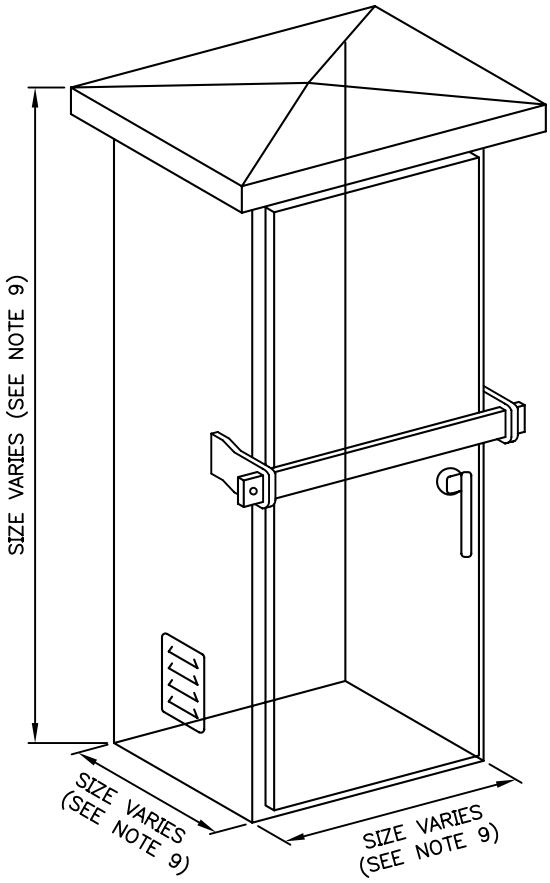

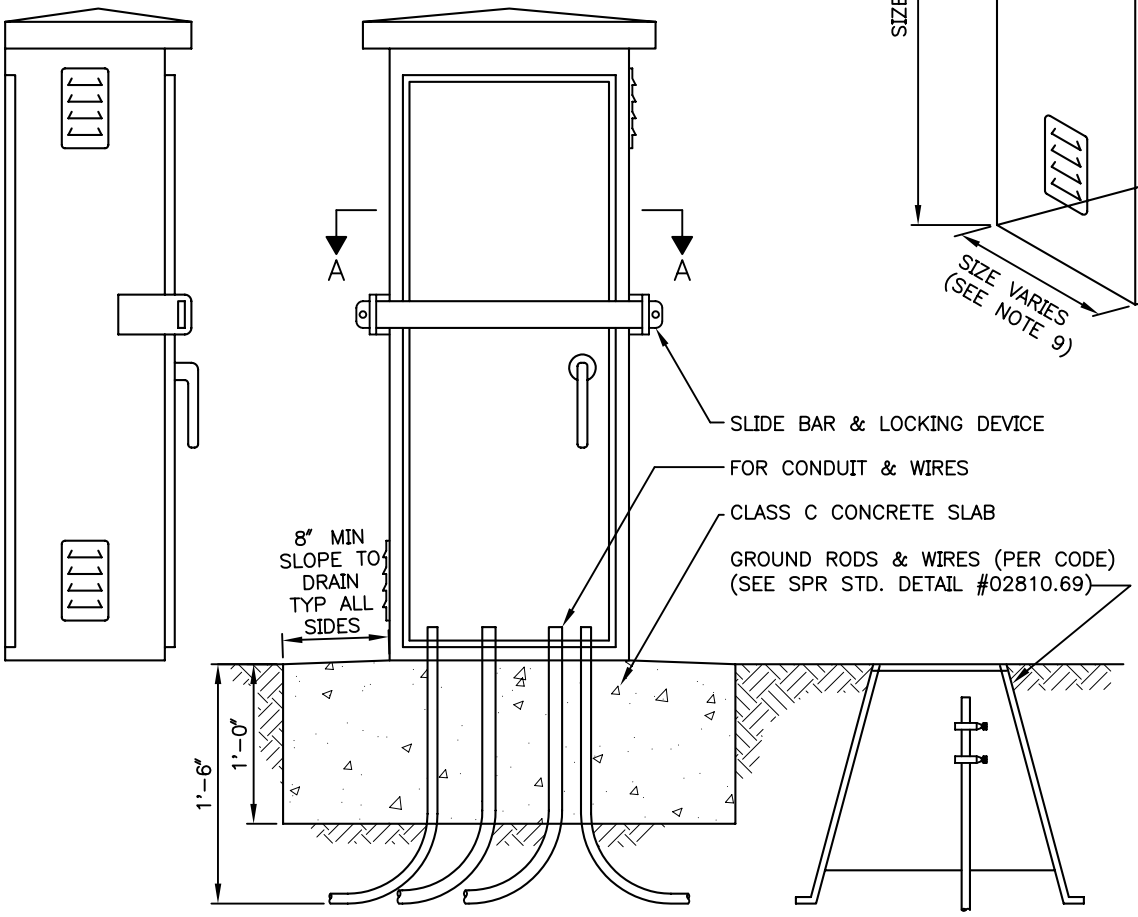

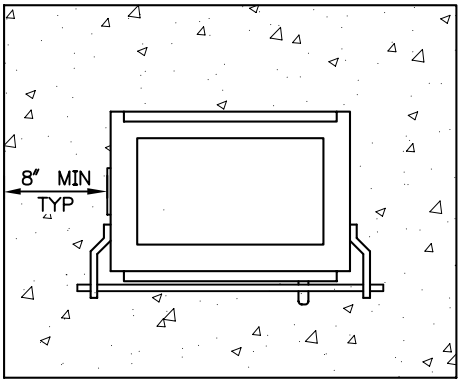

SECTION A-A

City of Seattle Department of Parks & Recreation	**IRRIGATION CONTROLLER ENCLOSURE** STD. DETAIL NO. **32 85 19.16**