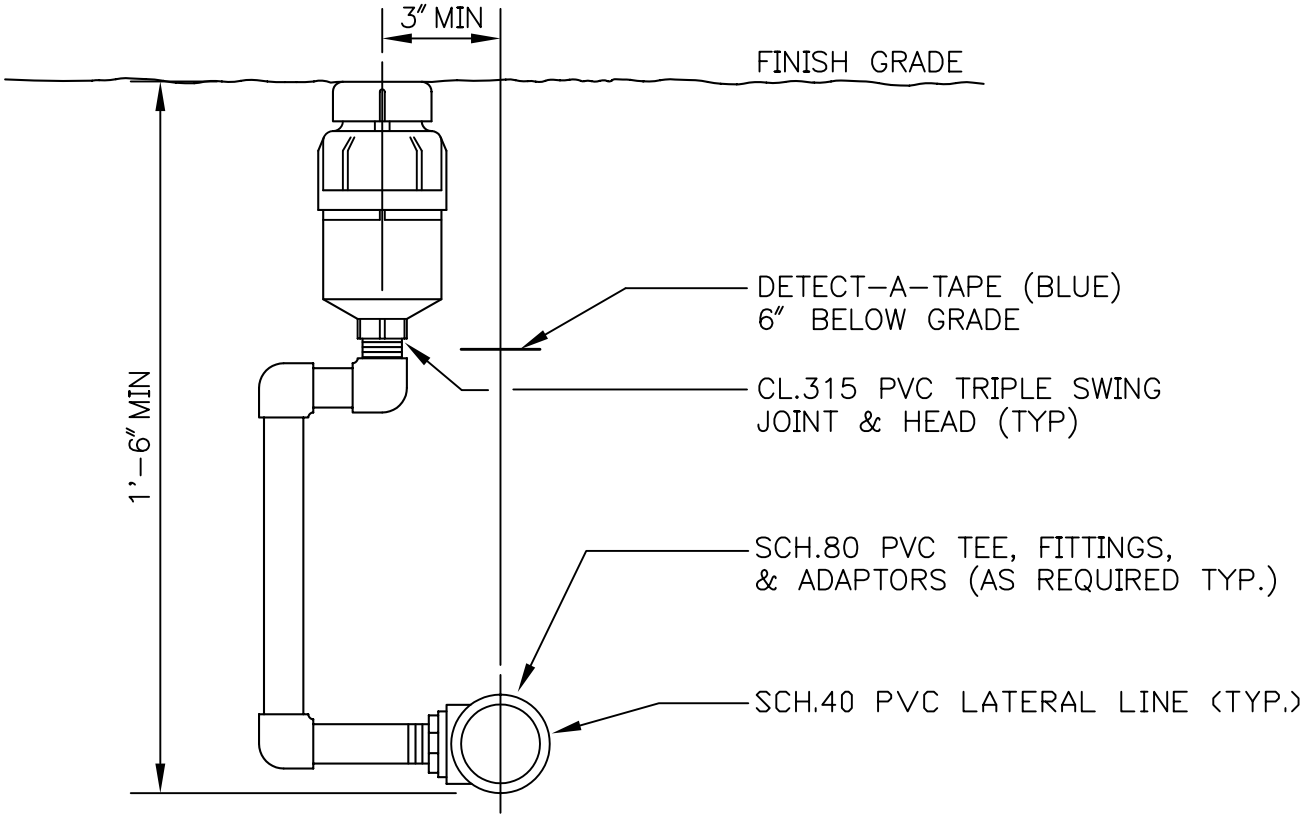

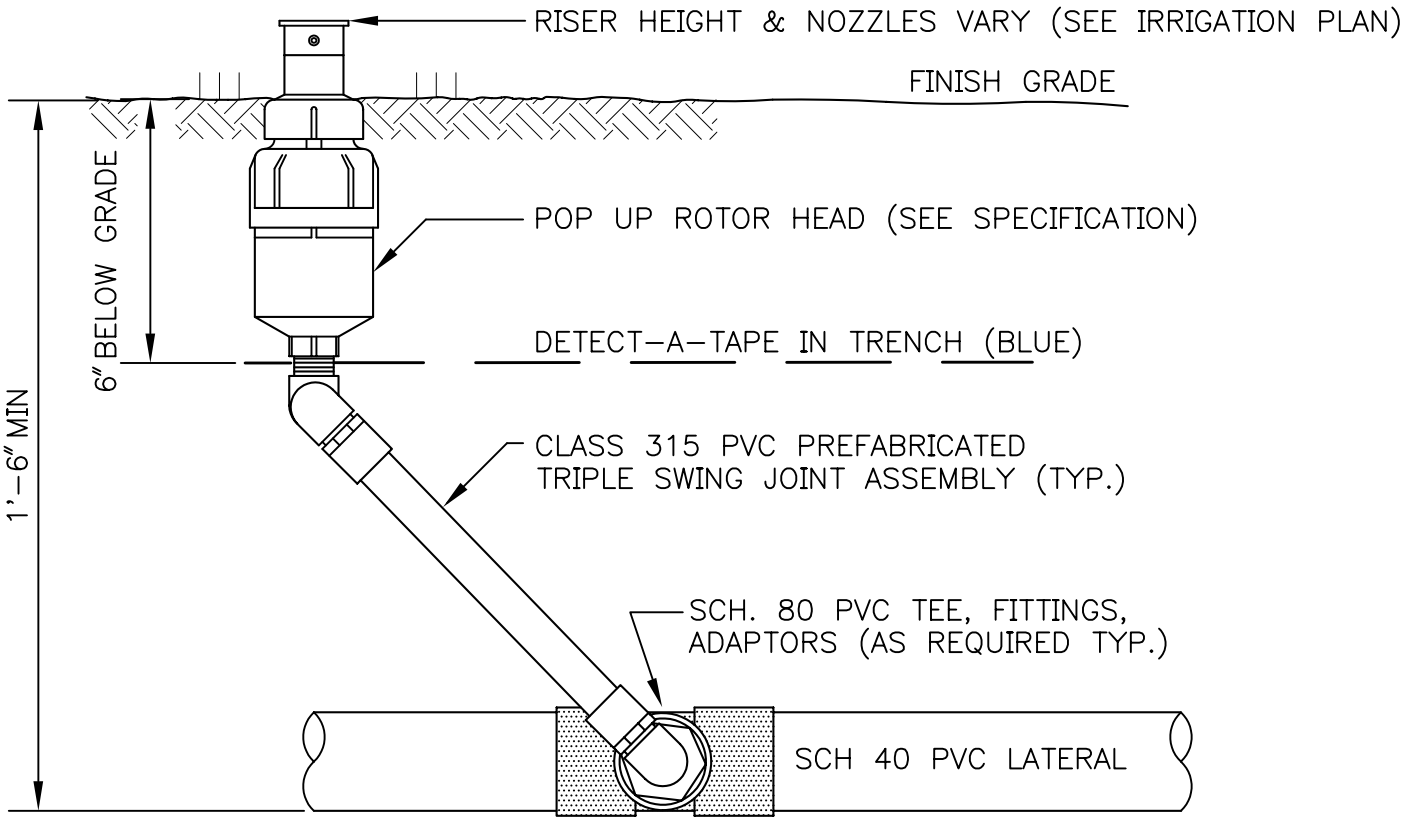

NOTE:
USE TEFLON TAPE ON ALL
THREADED FITTINGS

City of Seattle Department of Parks & Recreation	**POP-UP ROTOR HEAD DETAIL** **STD. DETAIL NO. 32 84 26.16**