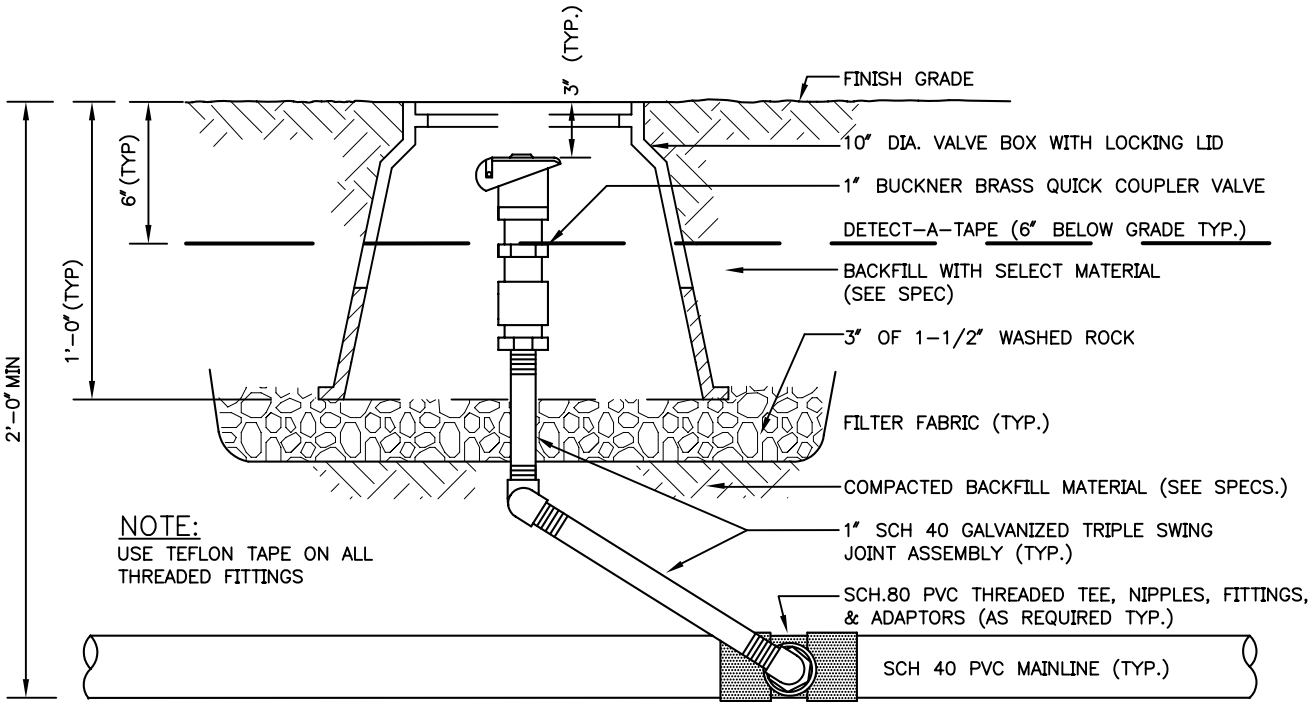

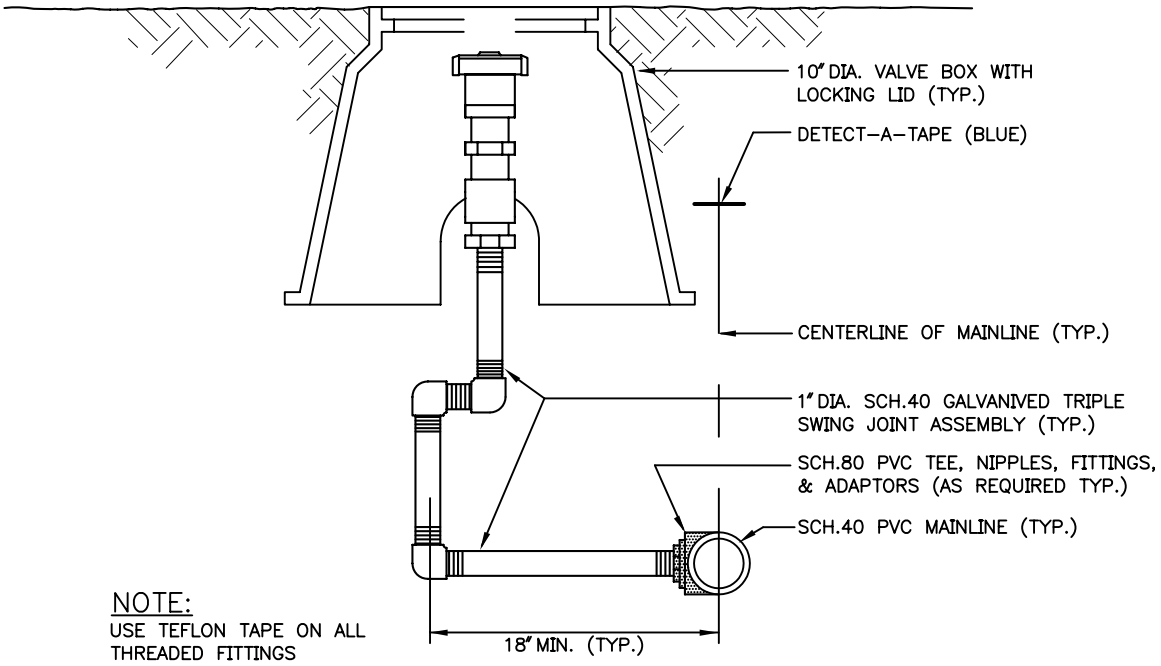

TYPICAL QUICK COUPLER VALVE

City of Seattle Department of Parks & Recreation	**QUICK COUPLER VALVE DETAIL** **STD. DETAIL NO. 32 84 23.13**