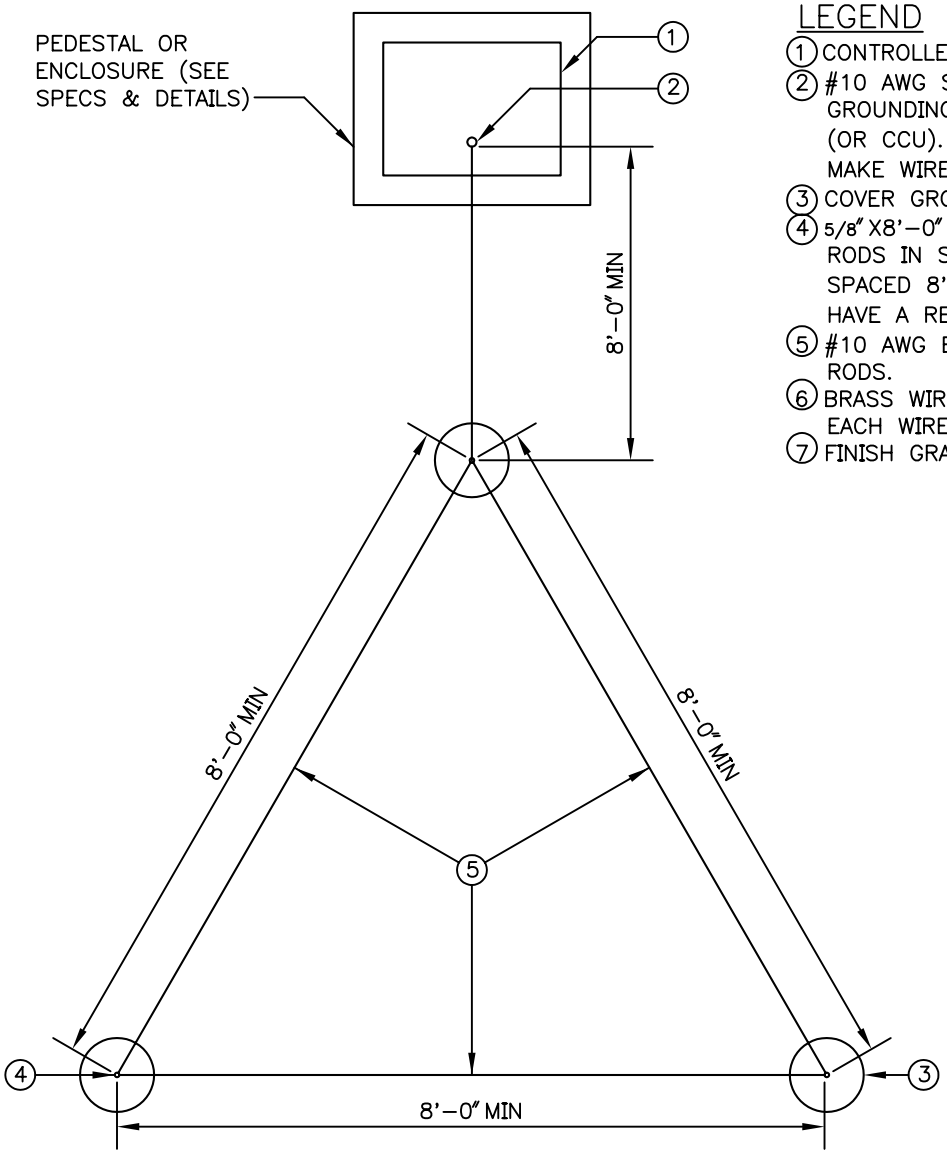

GROUND ROD LAYOUT

LEGEND

1. CONTROLLER OR CLUSTER CONTROL UNIT (CCU).
2. #10 AWG SOLID BARE COPPER WIRE FROM GROUNDING ROD TO GROUND LUG THEN TO CONTROLLER (OR CCU).
   MAKE WIRE 8'-0" MIN. IN LENGTH (TYP.).
3. COVER GROUNDING RODS WITH 6" ROUND VALVE BOX.
4. 5/8" X8'-0" COPPER CLAD GROUNDING RODS. INSTALL RODS IN SOIL IN A TRIANGULAR PATTERN, SPACED 8'-0" MIN. APART. (GROUNDING GRID SHALL HAVE A RESISTANCE OF 10 OHMS OR LESS).
5. #10 AWG BARE COPPER WIRE BETWEEN GROUNDING RODS.
6. BRASS WIRE CLAMP. USE SEPARATE CLAMP FOR EACH WIRE.
7. FINISH GRADE

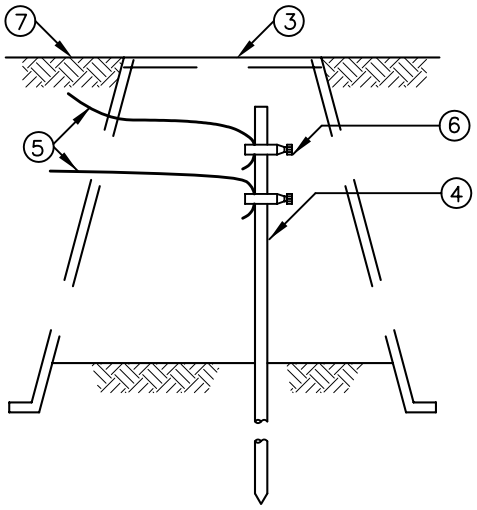

GROUND ROD ASSEMBLY

City of Seattle Department of Parks & Recreation	**GROUNDING RODS - LAYOUT DETAILS** **STD. DETAIL NO. 32 85 23.13**