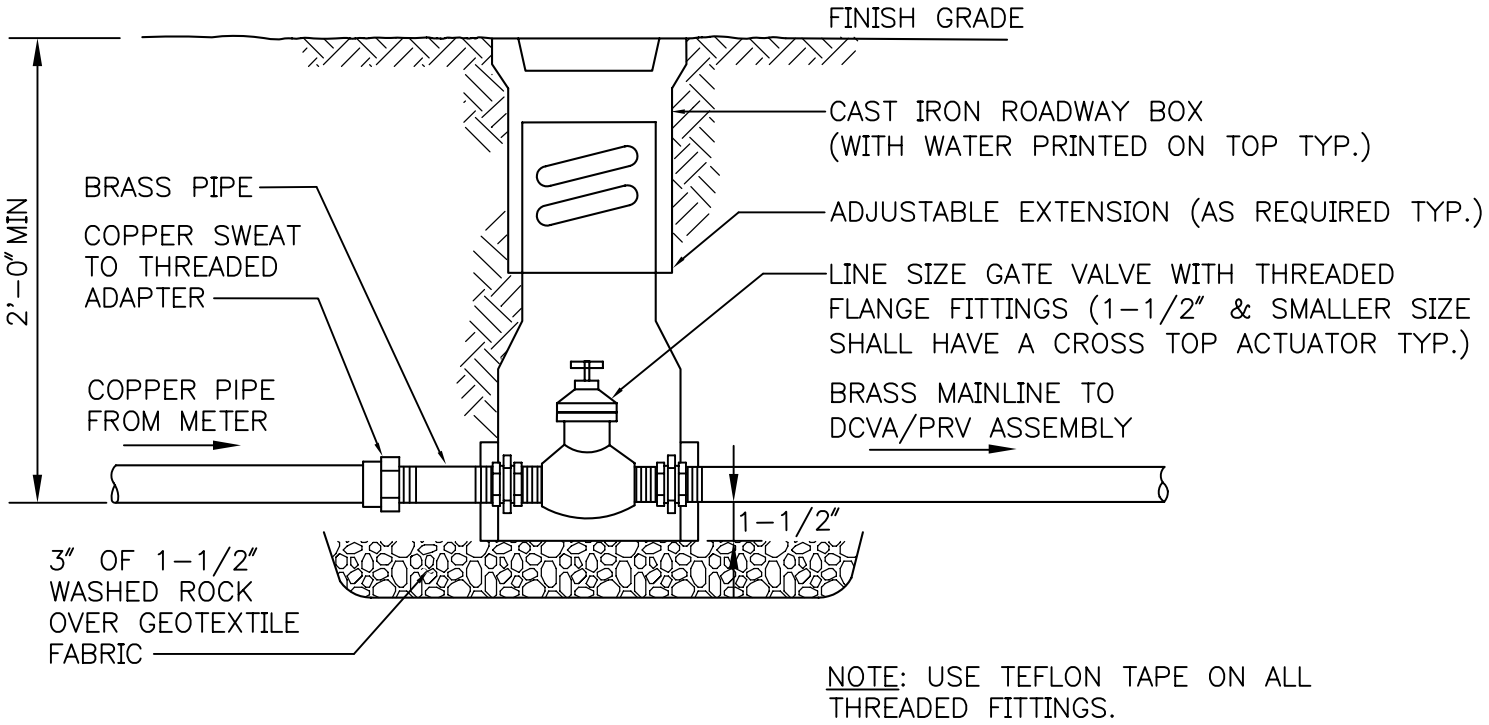

GATE VALVE (1–1/2″ & SMALLER)

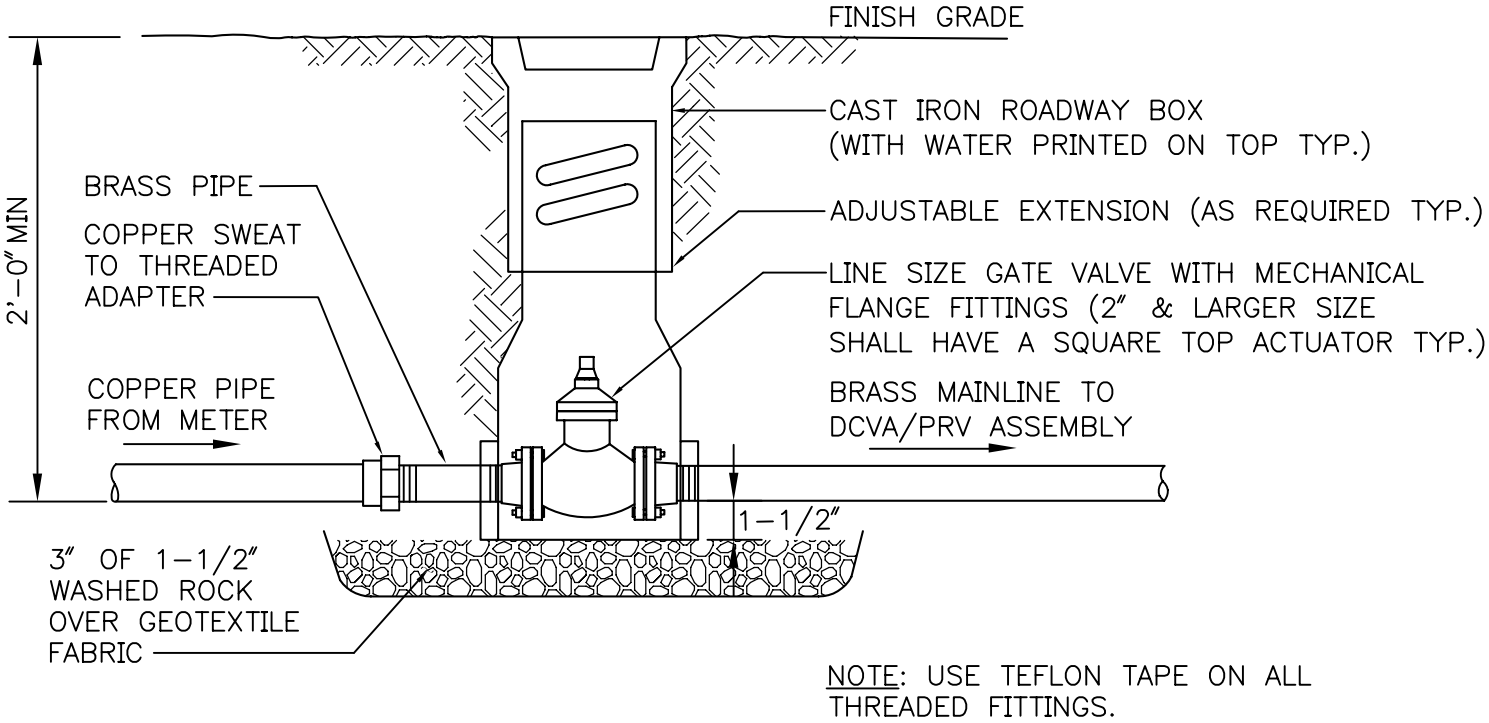

GATE VALVE (2″ & LARGER)

City of Seattle Department of Parks & Recreation	**GATE VALVE DETAILS (FOR BRASS PIPE)** **STD. DETAIL NO. 32 84 23.23**