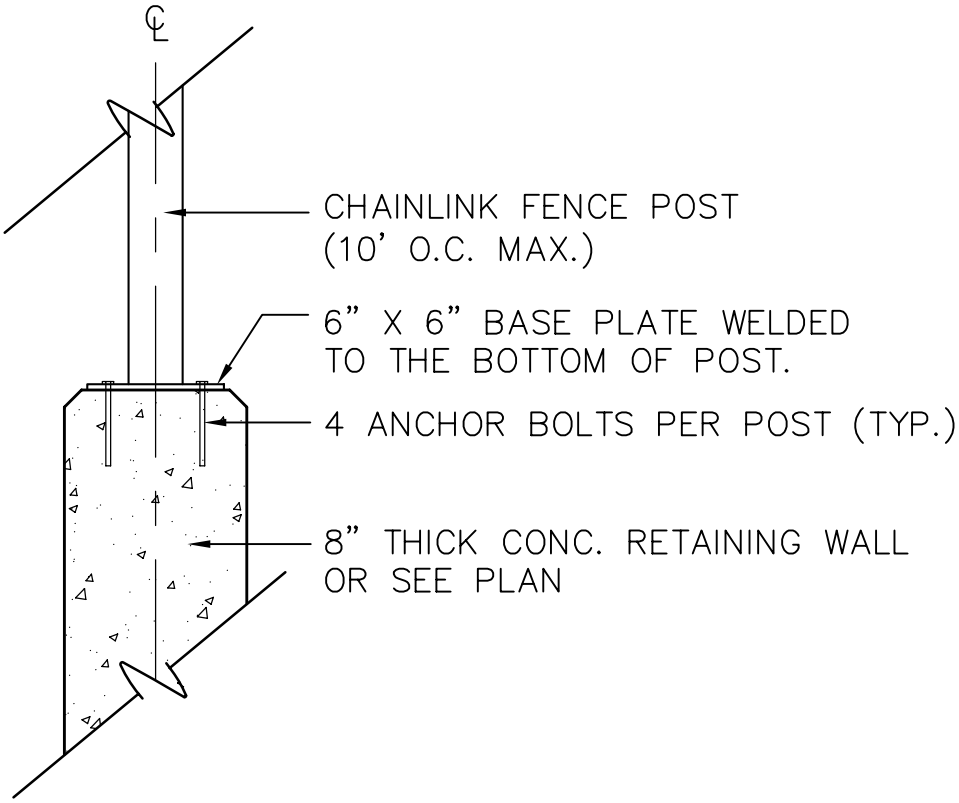

ANCHOR BOLT OPTION

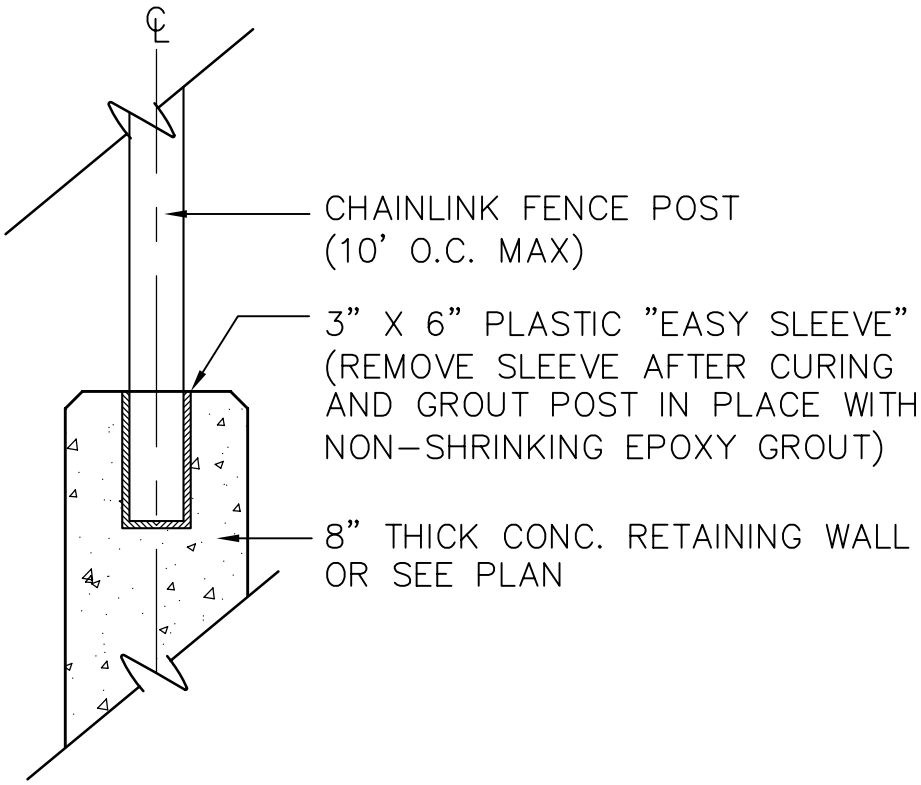

PLASTIC SLEEVE OPTION

City of Seattle **Department of Parks & Recreation**	**CL FENCE ON WALL DETAILS** **STD. DETAIL NO. 32 31 00.29**