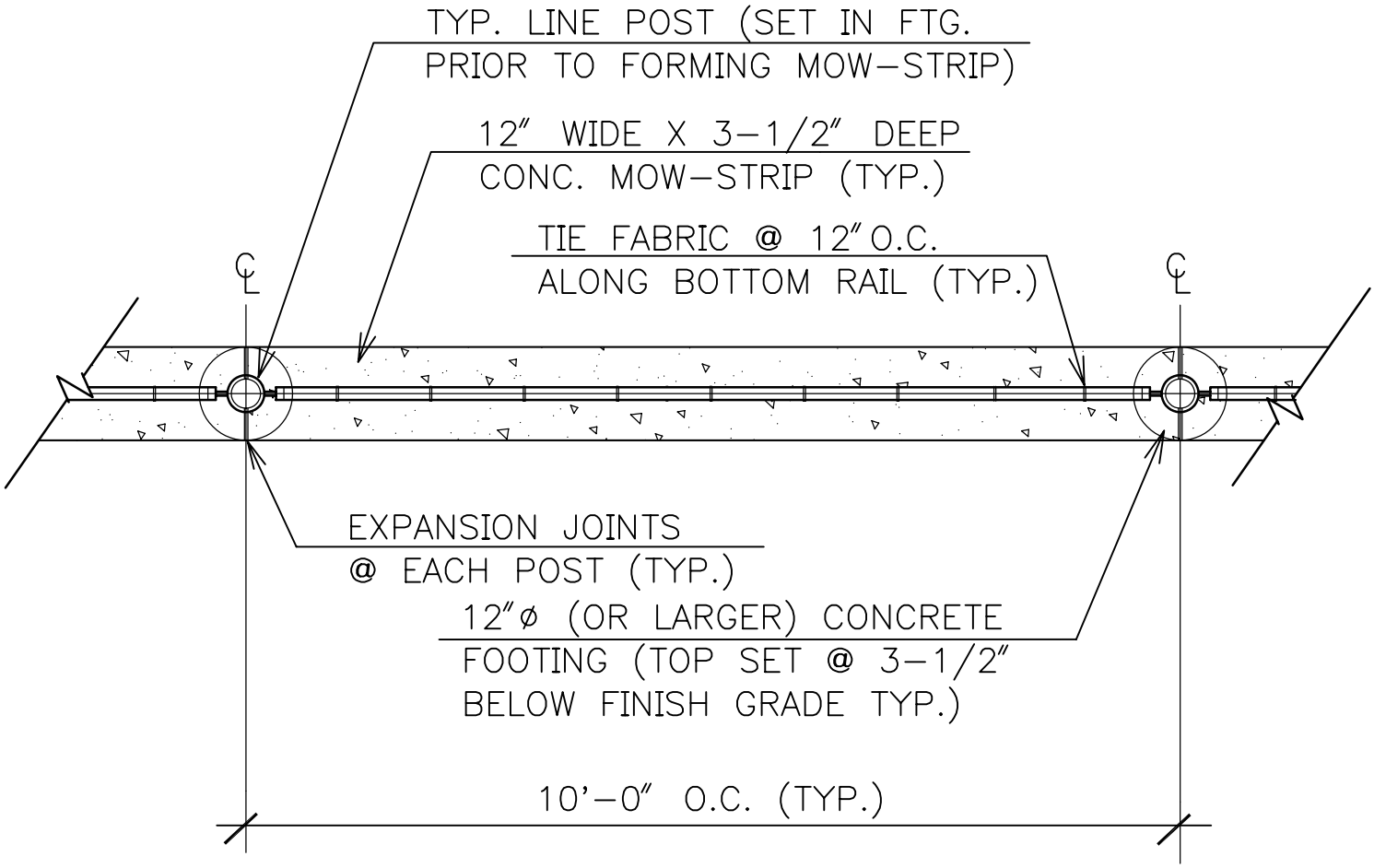

City of Seattle Department of Parks & Recreation	**CONCRETE MOW STRIP DETAIL** **STD. DETAIL NO. 32 31 13.59**