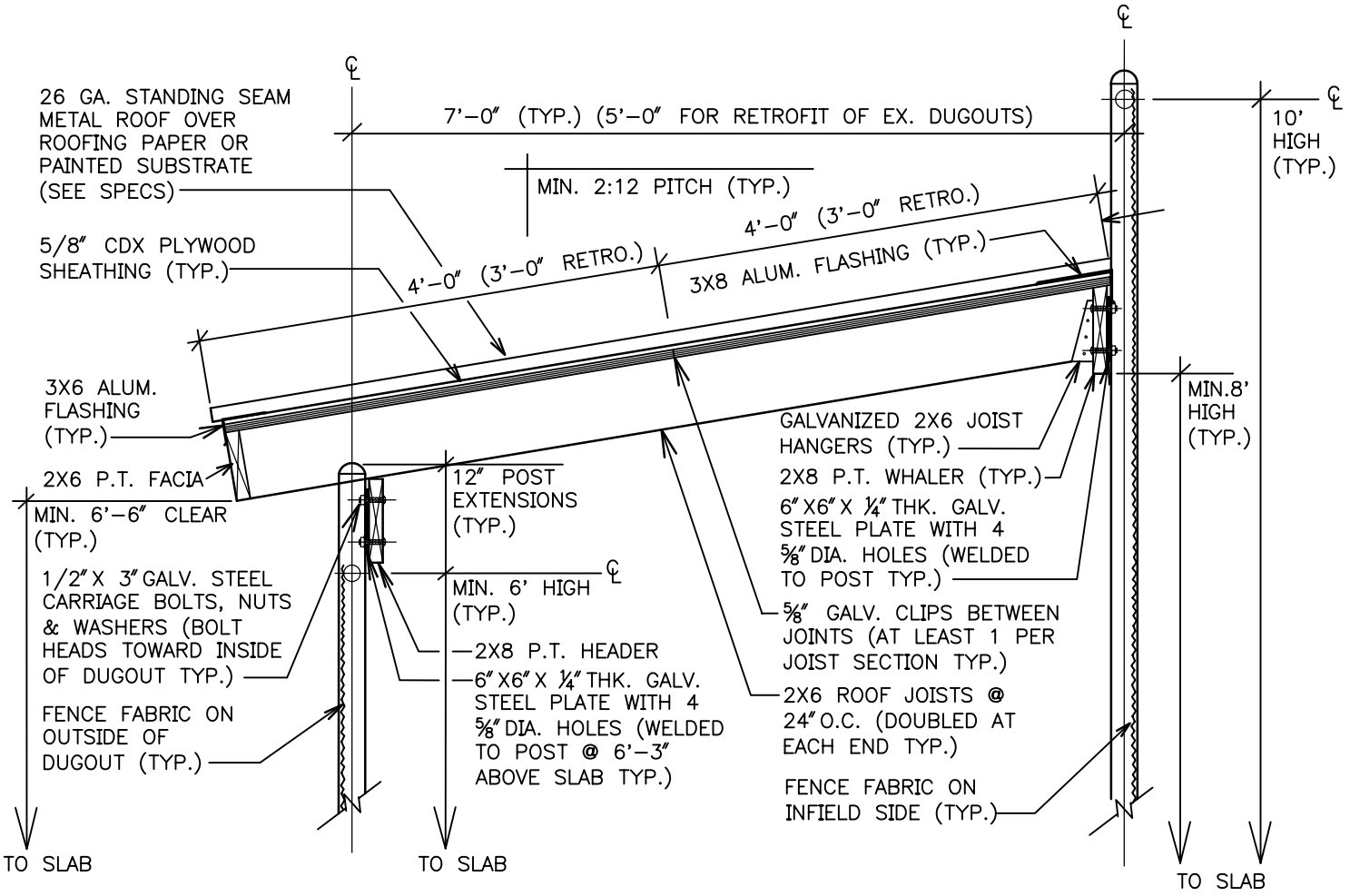

GENERAL NOTES:

1.) ATTACH 5/8" PLYWOOD SHEATHING WITH GALV. ROOFING NAILS @ 6" O.C. (EDGES) & 9" O.C. (ELSEWHERE).
2.) USE PRESSURE TREATED MEMBERS ON ALL OUTSIDE EDGES, WHALERS, FASCIAS, & HEADERS (TYP.) ALL OTHER MEMBERS SHALL BE UNTREATED FIR (TYP.).
3.) ALL WOOD MEMBERS SHALL BE PRIMED & PAINTED PRIOR TO ASSEMBLY (LIGHT GRAY TYP.).
4.) WELD GALVANIZED PLATES TO POSTS & ATTACH BOLTS SO THAT FENCE FABRIC IS FREE TO BE REMOVED WITHOUT REMOVING BOLTS (TYP.).

City of Seattle Department of Parks & Recreation	**DUGOUT ROOF SECTION** **STD. DETAIL NO. 32 31 13.69**