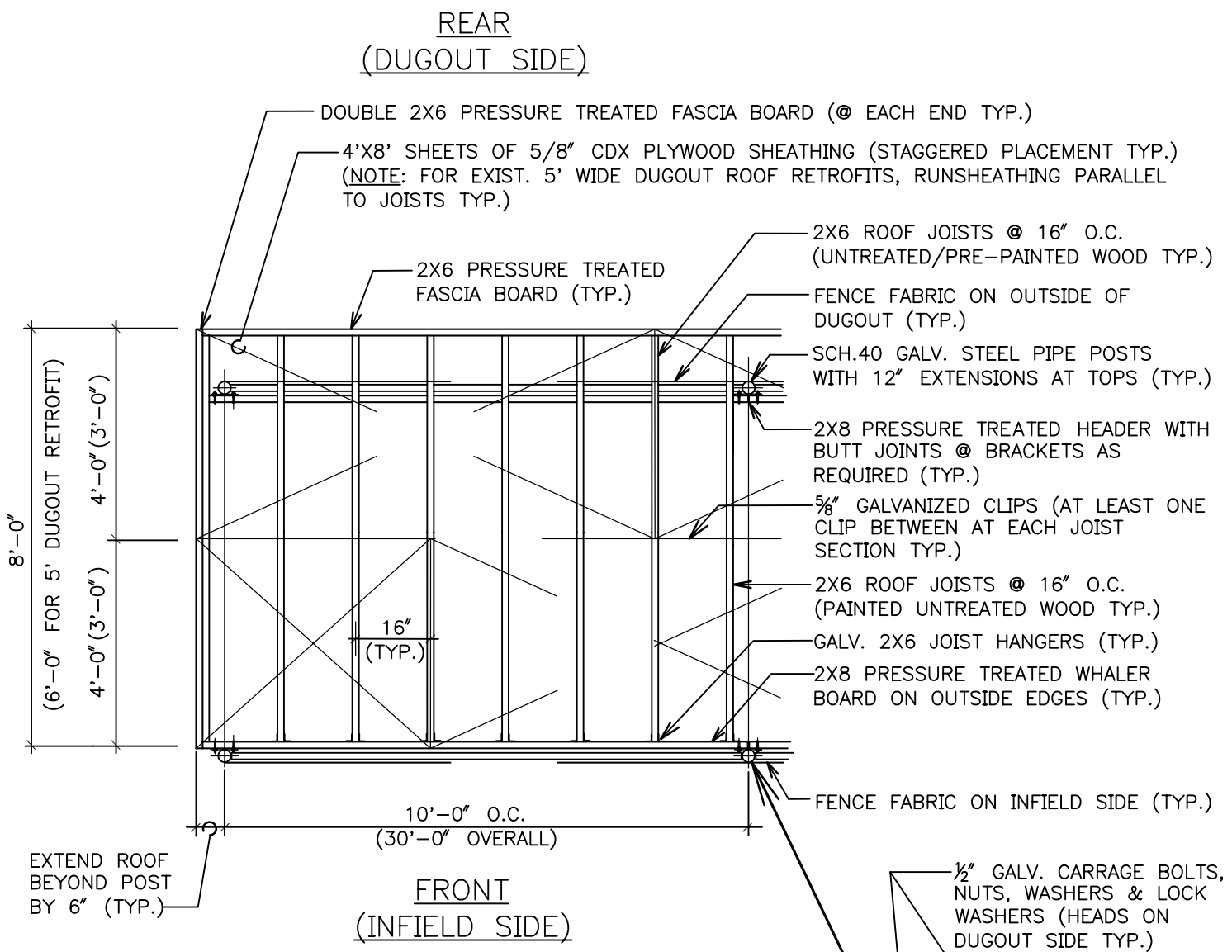

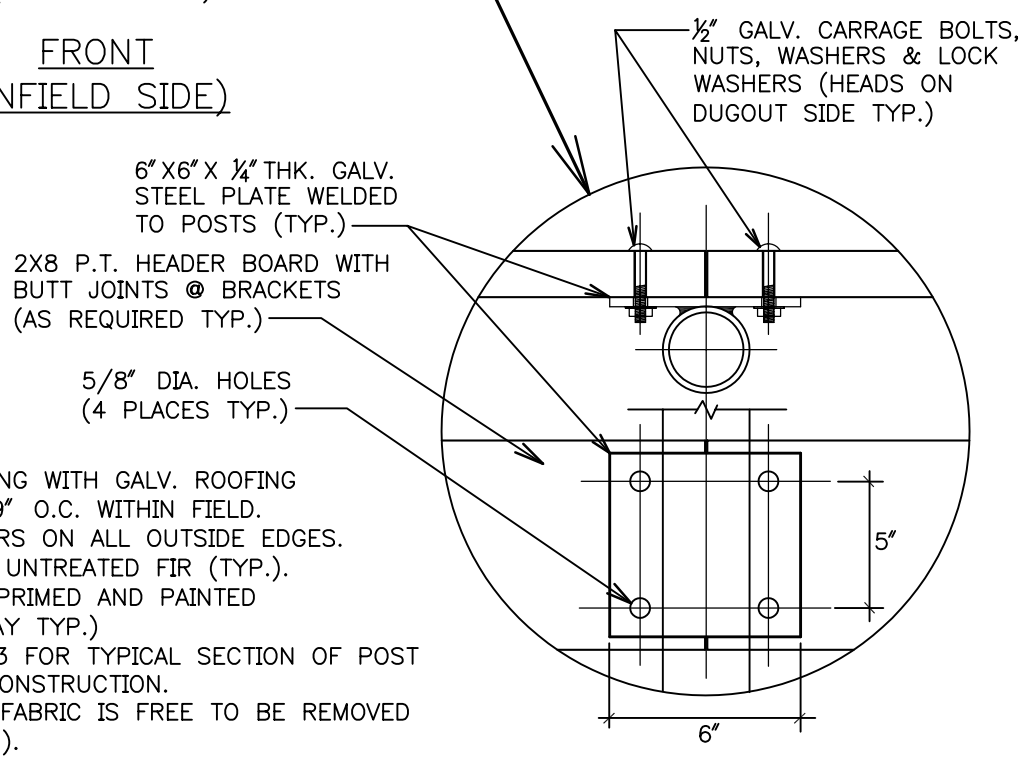

NOTES:

1.) ATTACH 5/8" PLYWOOD SHEATHING WITH GALV. ROOFING NAILS @ 6" O.C. AT EDGES & 9" O.C. WITHIN FIELD.
2.) USE PRESSURE TREATED MEMBERS ON ALL OUTSIDE EDGES. ALL OTHER MEMBERS SHALL BE UNTREATED FIR (TYP.).
3.) ALL WOOD MEMBERS SHALL BE PRIMED AND PAINTED PRIOR TO ASSEMBLY (LIGHT GRAY TYP.)
4.) SEE SPR STD. DETAIL #02860.53 FOR TYPICAL SECTION OF POST EXTENSIONS & DUGOUT ROOF CONSTRUCTION.
5.) ATTACH BOLTS SO THAT FENCE FABRIC IS FREE TO BE REMOVED WITHOUT REMOVING BOLTS (TYP.).
6.) USE 3" X3" X6" LONG, 1/4" THK. GALV. ANGLE IRON BRACKETS WELDED TO ALL POSTS OVER 2-7/8" O.D. (TYP.).

City of Seattle Department of Parks & Recreation	**DUGOUT ROOF DETAILS - PLAN VIEW** **STD. DETAIL NO. 32 31 13.66**