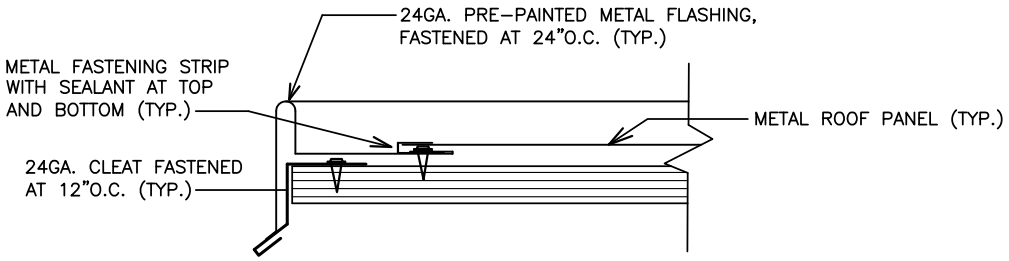

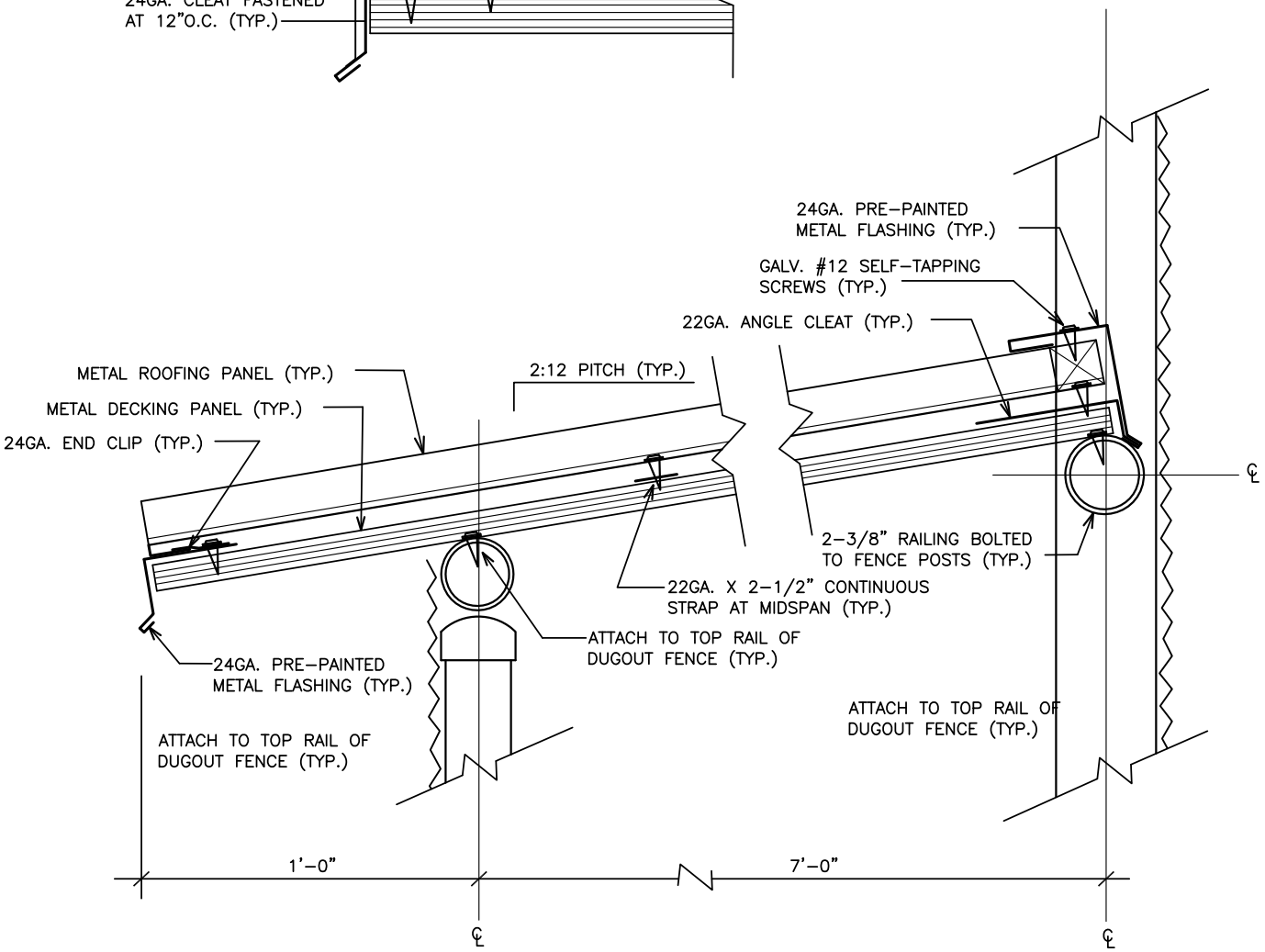

GENERAL NOTES:

1.) PRE-PAINTED 24GA. HR-36 MTEAL ROOFING PANELS ON 20GA. B-36 METAL DECKING PANELS AS MANUFACTURED BY BHP, OR APPROVED EQUALS (TYP.)
2.) SECURE METAL DECKING TO FENCE RAILS WITH #12 SELF-TAPPING SCREWS AT 6" O.C. (TYP.)
3.) COLOR SHALL BE SELECTED FROM MANUFACTURER'S STANDARD COLORS OR AS DIRECTED BY THE ENGINEER (TYP.)

City of Seattle Department of Parks & Recreation	**METAL DUGOUT ROOFING DETAILS** **STD. DETAIL NO. 32 31 13.76**