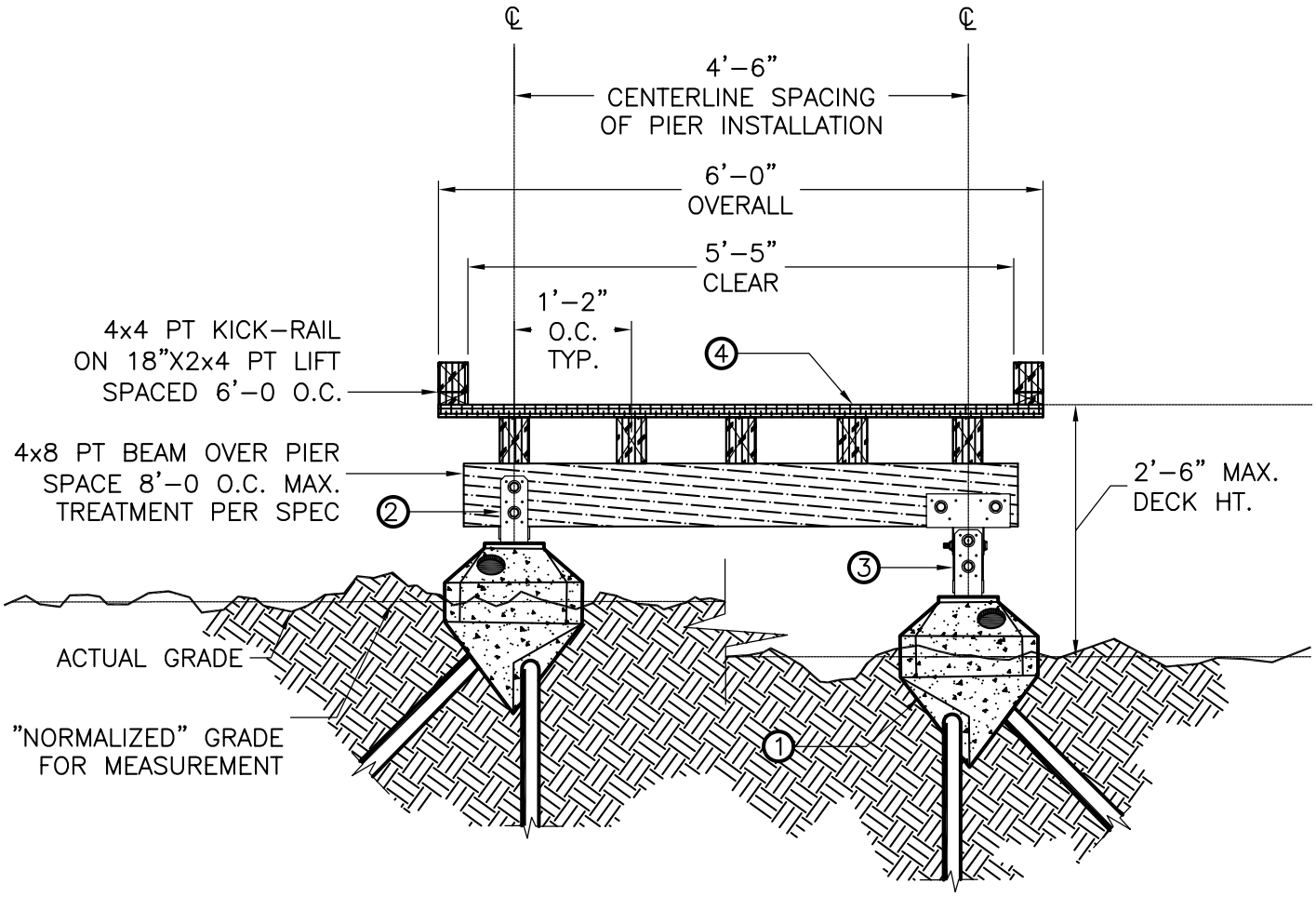

BOARDWALK NOTES:

DISTURBANCE IS LIMITED TO EXCAVATION FOR PLACEMENT OF FOUNDATION PIERS.

1. FOUNDATION CONSTRUCTED OF "PIN FOUNDATIONS DIAMOND PIER", 50LB UNIT, 4 PINS EA. @ 48", INSTALLED PER APPROVED MANUFACTURERS SPECIFICATION.

2. BEAM SADDLE; WHERE INSTALLATION WILL NOT CAUSE MAXIMUM 2% SURFACE SLOPE OF INSTALLED DECKING, CONSTRUCT BOARDWALK FROM SIMPSON ABU44 (OR APPROVED EQUAL) USED AS A BEAM SADDLE FASTENED TO PIN–PIER.

3. POST–AND–BEAM; WHERE SURFACE GRADE REQUIRES, CONSTRUCT BOARDWALK FROM SIMPSON ABU44 (OR APPROVED EQUAL) USED AS A POST BASE. USE SIMPSON PC44 TO CONNECT POST TO BEAM.

4. BOARDWALK DECKING TO BE TREX(R) COMPOSITE RECYCLED PLASTIC, 1x4" x6'–0, COLOR "WOODLAND BROWN".

SEE BULKHEAD DETAIL FOR ADDITIONAL INFORMATION.

City of Seattle **Department of Parks & Recreation**	**PIN PILE BOARDWALK DETAILS** **STD. DETAIL NO. 32 34 23**