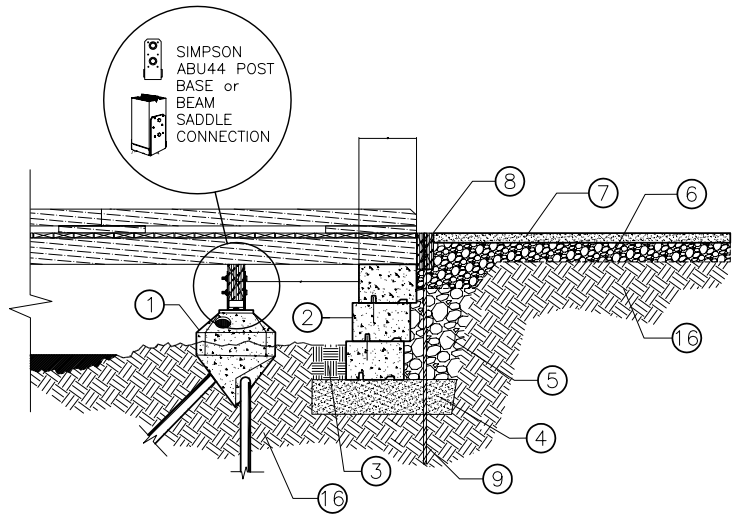

LONGITUDINAL SECTION VIEW

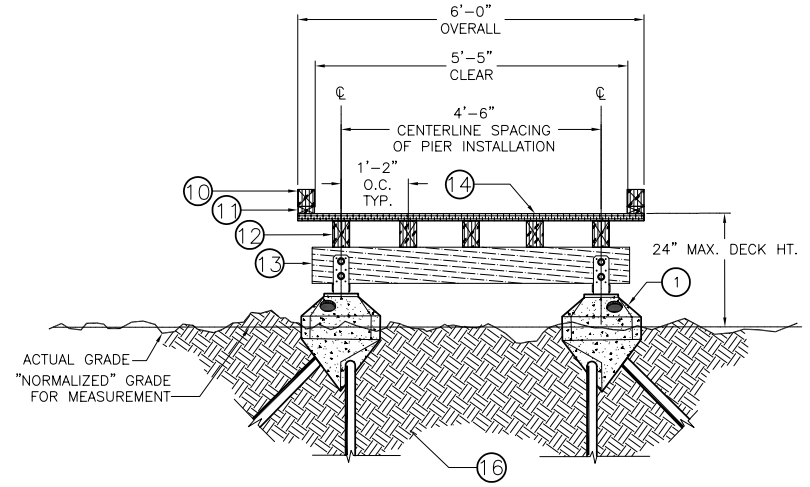

CROSS SECTION VIEW

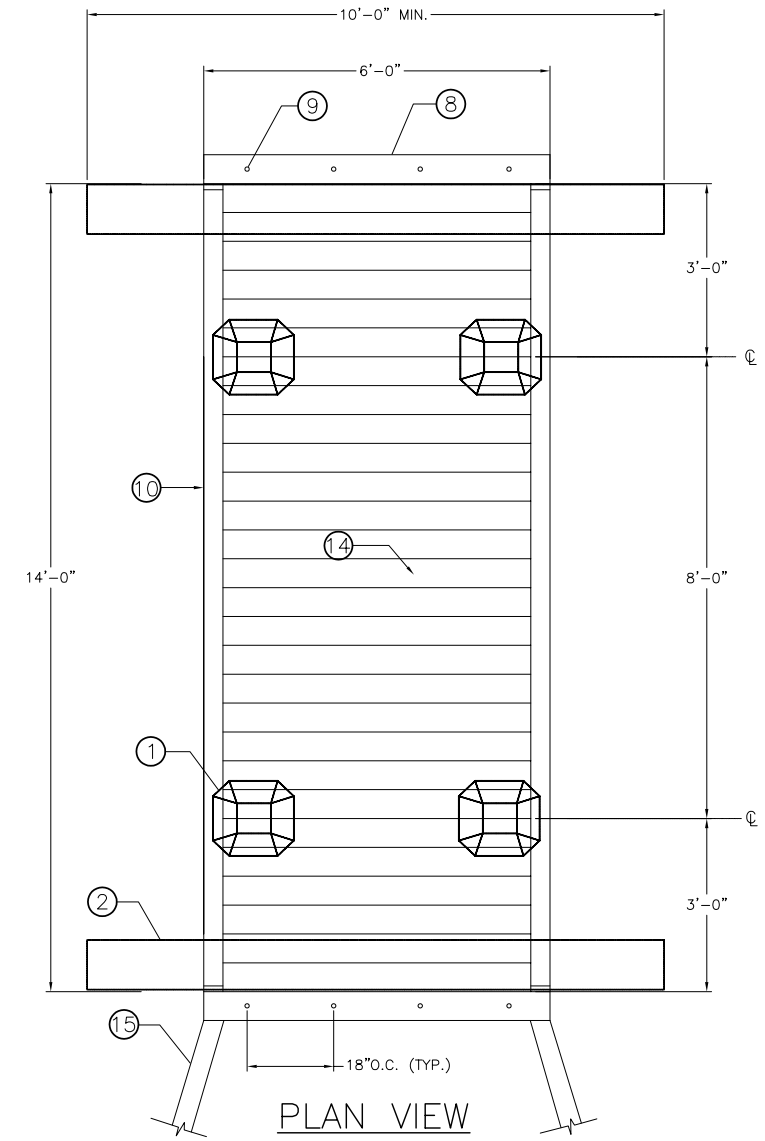

PLAN VIEW

1. PIN PIER FOOTING WITH POST BRACKET (TYP.)
2. CONCRETE MASONRY UNIT WALL ABUTMENT WALLS (3 HIGH)
3. COMPACTED NATVIE BACKFILL
4. 4" DEEP X 18" WIDE 5/8" MINUS CRUSHED ROCK BASE
5. 5/8" (NO MINUS) DRAIN ROCK BEHIND WALL
6. 4" DEEP 5/8" MINUS CRUSHED ROCK PATHWAY BASE
7. 2" DEEP 1/4" MINUS CRUSHED ROCK PATHWAY PAVING
8. 6X8 PRESSURE TREATED TIMBER END BOARDS
9. 3' LONG #5 RE-BAR DRIVEN @ 18" O.C. (TYP.)
10. 4X4 P.T. KICK RAIL (BOTH SIDES TYP.)
11. 2X4 P.T. LIFT SPACERS @ 6' O.C. MAX. (TYP.)
12. 4X6 P.T. JOISTS @ 16" O.C. (TYP.)
13. 4X8 P.T. BEAMS (TYP.)
14. 2X6 P.T. DECKING WITH 1/8" GAPS (TYP.)
15. 4X6 PATHWAY EDGING (1ST 6' BOTH SIDES/ENDS TYP.)
16. UNDISTURBED NATIVE SOILS

>>>>CAUTION - CALL 811<<<<
UTILITY NOTIFICATION CENTER
BEFORE YOU DIG!
WWW.CALLBEFOREYOUDIG.ORG

NOT LESS THAN **2** OR MORE THAN **10** BUSINESS DAYS PRIOR TO COMMENCING EXCAVATION OR DEMOLITION, SECURE THE SERVICES OF A COMMERCIAL UNDERGROUND UTILITIES LOCATOR SERVICE TO IDENTIFY BELOW-GROUND IMPROVEMENTS THAT MAY NOT BE INDICATED ON THE DRAWINGS. ADDITIONALLY, TO REQUEST **ON-SITE** UNDERGROUND UTILITY SYSTEMS LOCATES, CALL **SPR INSPECTION REQUEST LINE @ (206) 684-7034.** REFER TO SECTIONS 02100 & 02120 OF THE SPECIFICATIONS FOR INSTRUCTIONS ON HOW TO PROCEED.

NO.	REVISION – AS BUILT	DATE
3		
2		
1		

REVIEWED: _____ PARK ENGINEER _____ DATE

All work done in accordance with the City of Seattle Standard Plans and Specifications in effect on the date shown above, and supplemented by Special Provisions.

SEATTLE PARKS AND RECREATION

FACILITY NAME

PROJECT NAME

PIN PIER FOOTBRIDGE DETAILS

DESIGNED J NEIFORD
DRAWN J NEIFORD
CHECKED X
DATE X
SHEET X OF X
ORDINANCE NO. X
CONTRACT NO. X
SCALE NOT TO SCALE

X-0X