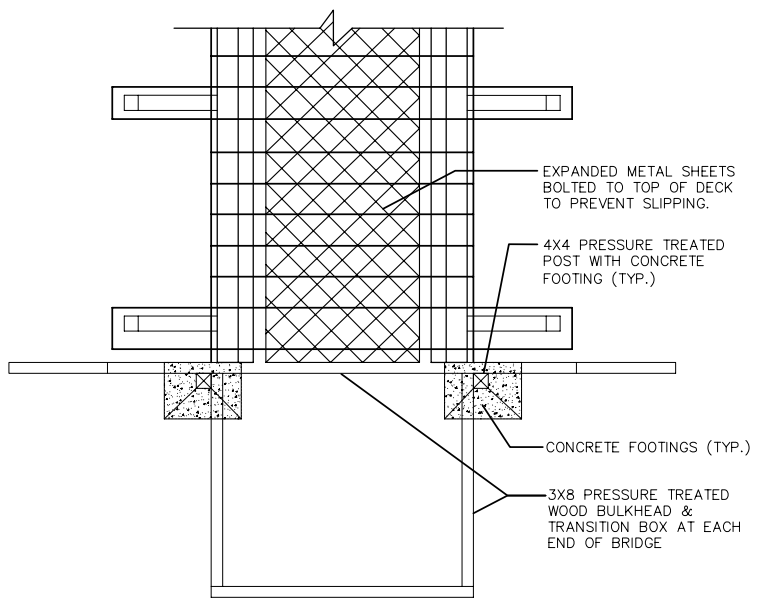

PLAN VIEW

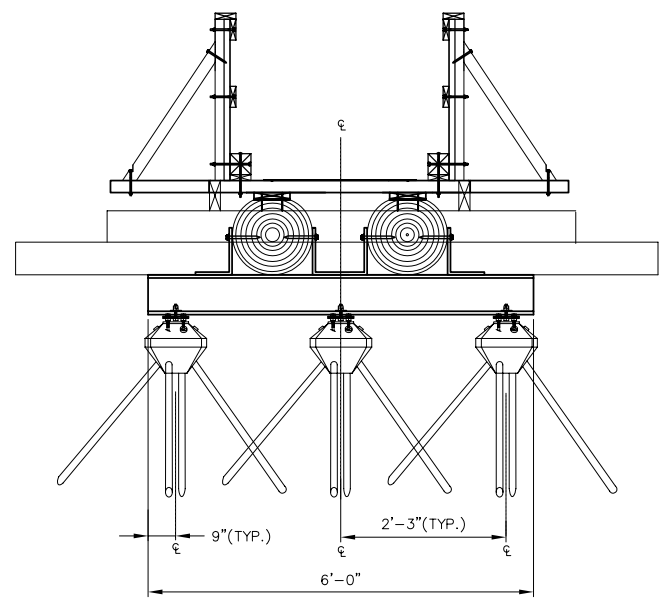

END VIEW

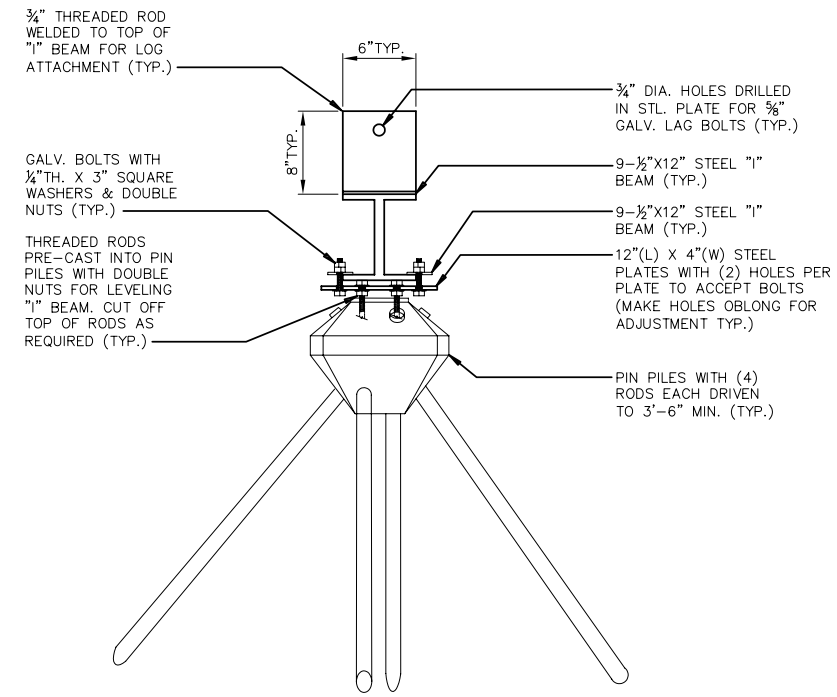

END VIEW

PIN PILE FOOTING DETAILS

NOT TO SCALE

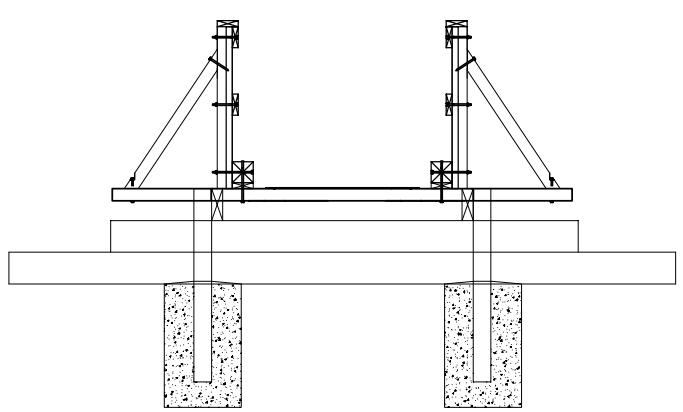

END VIEW

CRIB WALL DETAILS

NOT TO SCALE

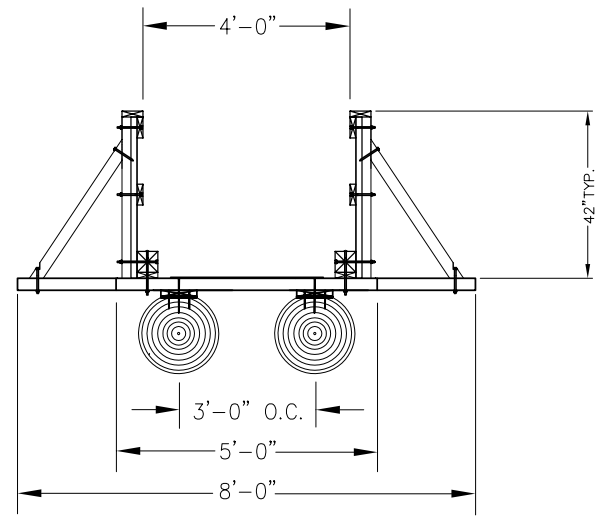

END VIEW

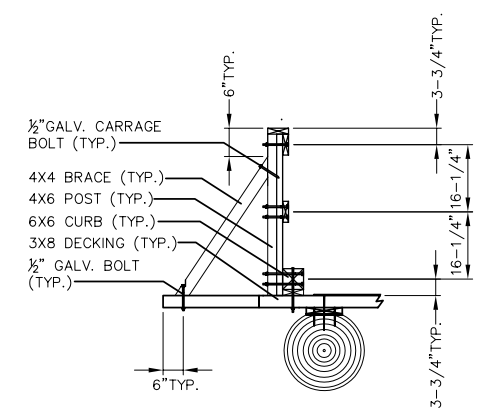

SECTION VIEW

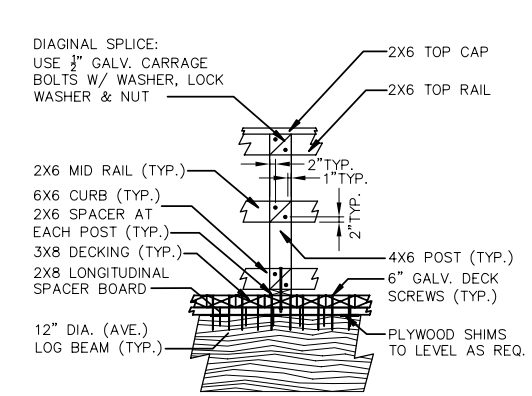

ELEVATION VIEW

TIMBER HANDRAIL DETAILS

NOT TO SCALE

CONSTRUCTION STORMWATER CONTROL NOTES:

1. THE IMPLEMENTATION OF THE CITY OF SEATTLE'S BEST MANAGEMENT PRACTICES (BMP'S) AND TEMPORARY EROSION AND SEDIMENTATION CONTROL (TESC) MEASURES AND THE CONSTRUCTION, MAINTENANCE, AND REPLACEMENT OF THESE FACILITIES IS THE RESPONSIBILITY OF THE CONTRACTOR AT ALL TIMES.

2. THE TESC FACILITIES MUST BE CONSTRUCTED IN CONJUNCTION WITH ALL CONSTRUCTION ACTIVITIES AND IN SUCH A MANNER AS TO ENSURE THAT SEDIMENT LADEN WATER OR RUNOFF DOES NOT ENTER THE CREEK OR FLOW OFF SITE AT ANY TIME.

3. THE TESC FACILITIES ARE THE MINIMUM REQUIREMENTS FOR ANTICIPATED SITE CONDITIONS. DURING THE CONSTRUCTION PERIOD, THESE TESC FACILITIES SHALL BE UPGRADED BY THE CONTRACTOR AS NEEDED OR AS DIRECTED BY THE ENGINEER FOR UNEXPECTED STORM EVENTS.

4. THE TESC FACILITIES SHALL BE INSPECTED DAILY BY THE CONTRACTOR AND MAINTAINED AS NECESSARY OR AS DIRECTED BY THE ENGINEER TO ENSURE CONTINUOUS FUNCTIONING.

5. ANY AREA STRIPPED OF VEGETATION WHERE NO FURTHER WORK IS ANTICIPATED FOR A PERIOD OF 15 DAYS SHALL BE IMMEDIATELY STABILIZED WITH APPROVED TESC METHODS SUCH AS MULCHING, EROSION BLANKETS, PLASTIC SHEETING OR AS DIRECTED BY THE ENGINEER.

6. SPOILS PILES NOT USED AFTER A DAY SHALL BE COVERED WITH VISQUEEN (PLASTIC) TO KEEP SEDIMENT UNDER CONTROL.

9. CONTRACTOR SHALL APPOINT ONE PERSON TO BE IN CONTROL OF ALL TESC INSPECTION AND REPAIR ELEMENTS THROUGHOUT THE CONSTRUCTION PERIOD.

STRUCTURAL NOTES:

1. THE STAGING AREAS AND ACCESS ROUTES SHALL BE APPROVED BY ENGINEER PRIOR TO START OF WORK.

2. PROVIDE COMPLETE AND CONTINUOUS PROTECTION TO THE ROOT ZONES OF ADJACENT TREES AT ALL TIMES. PROVIDE SILTATION PROTECTION IN THE FORM OF CLEAN STRAW BALES OR SILTATION FENCING TO PREVENT THE TRANSPORT AND ACCUMULATION OF SILT-LADEN RUNOFF ONTO ROOTS OR INTO THE CREEK. UTILIZE STRAW BALES WHERE SILT FENCING WOULD INTERRUPT ROOT ZONES.

4. STORAGE OF EQUIPMENT AND MATERIALS SHALL BE ALLOWED ONLY IN AREAS DESIGNATED FOR CONSTRUCTION STORAGE. UNDER NO CIRCUMSTANCES ARE MATERIALS TO BE STORED IN PUBLIC USE AREAS OF THE PARKS PROPERTY, WITHIN 20' OF THE DRIP LINE OF A TREE, OR IN AN AREA THAT COULD RESULT IN DAMAGE FROM THE COMPACTION RESULTING FROM THE STORED ITEMS.

>>>>CAUTION - CALL 811<<<<
UTILITY NOTIFICATION CENTER
BEFORE YOU DIG!
WWW.CALLBEFOREYOUDIG.ORG

NOT LESS THAN **2** OR MORE THAN **10** BUSINESS DAYS PRIOR TO COMMENCING EXCAVATION OR DEMOLITION, SECURE THE SERVICES OF A COMMERCIAL UNDERGROUND UTILITIES LOCATOR SERVICE TO IDENTIFY BELOW-GROUND IMPROVEMENTS THAT MAY NOT BE INDICATED ON THE DRAWINGS. ADDITIONALLY, TO REQUEST ON-SITE UNDERGROUND UTILITY SYSTEMS LOCATES, CALL **SPR INSPECTION REQUEST LINE @ (206) 684-7034.** REFER TO SECTIONS 02100 & 02120 OF THE SPECIFICATIONS FOR INSTRUCTIONS ON HOW TO PROCEED.

NO.	REVISION – AS BUILT	DATE
3		
2		
1		

REVIEWED: PARK ENGINEER DATE

All work done in accordance with the City of Seattle Standard Plans and Specifications in effect on the date shown above, and supplemented by Special Provisions.

SEATTLE PARKS AND RECREATION

FACILITY NAME

PROJECT NAME

LOG FOOTBRIDGE DETAILS

DESIGNED J NEIFORD
DRAWN J NEIFORD
CHECKED X
DATE X
SHEET 2 OF 2
ORDINANCE NO. X
CONTRACT NO. X
SCALE NOT TO SCALE

FB-2