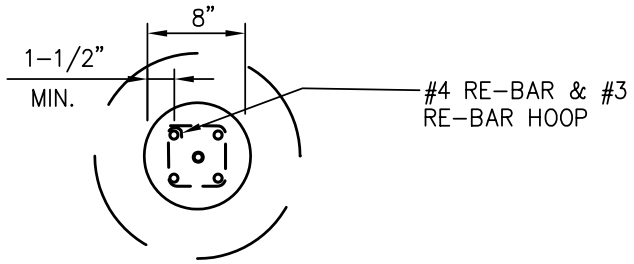

BOLLARD PLAN VIEW

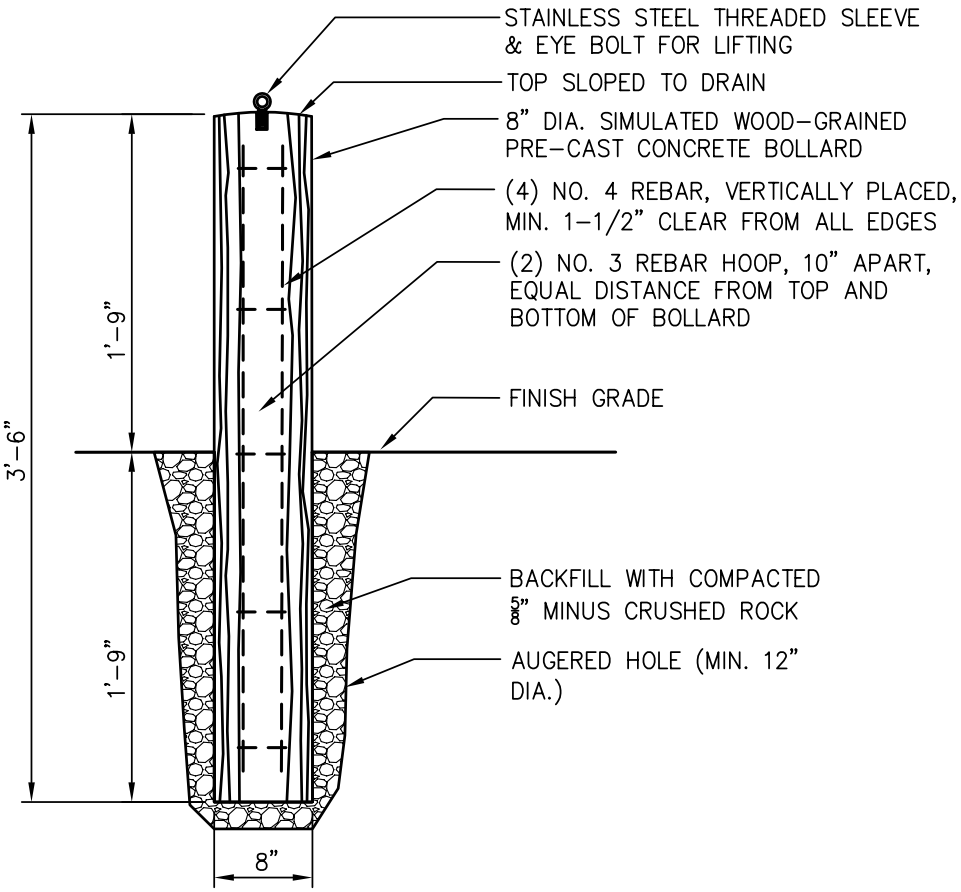

BOLLARD ELEVATION

X WOOD-GRAINED CONCRETE BOLLARD DETAIL

N.T.S.

NOTE: This bollard is produced and supplied by SPR Facilities Maintenance Services Shops at a cost of approximately $250 each.

City of Seattle Department of Parks & Recreation	WOOD-GRAINED CONCRETE BOLLARD STD. DETAIL NO. 12 93 63.19