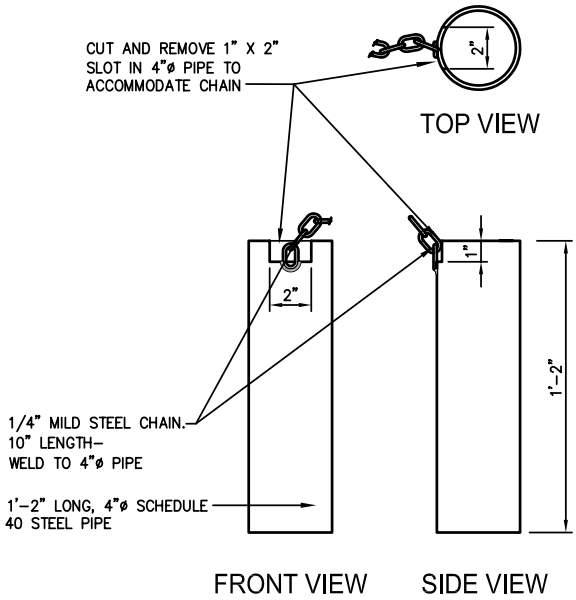

A GALVANIZED PIPE SLEEVE
N.T.S.

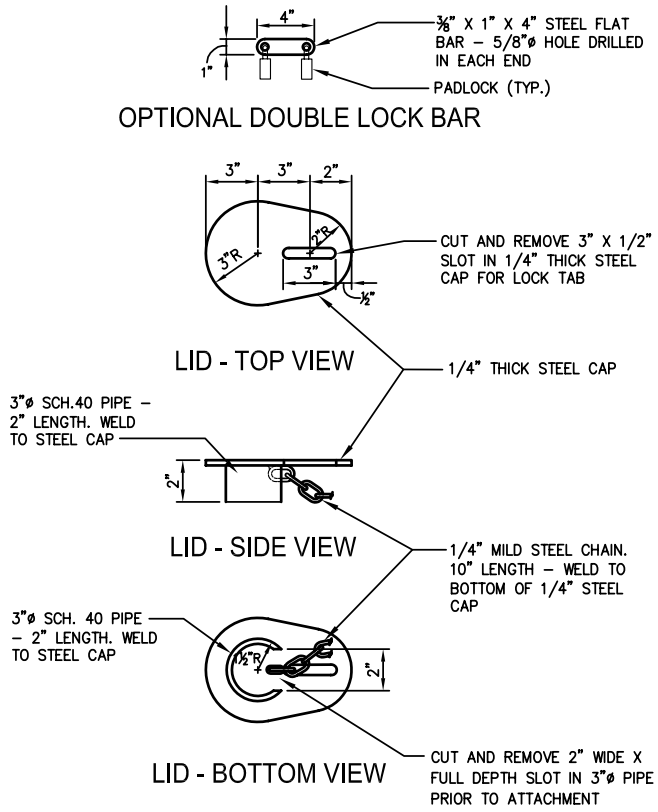

B STEEL LID
N.T.S.

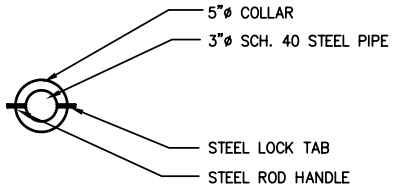

BOLLARD PLAN VIEW

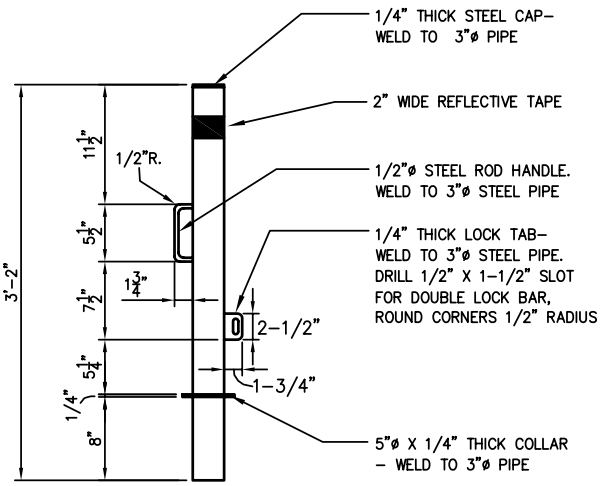

BOLLARD ELEVATION

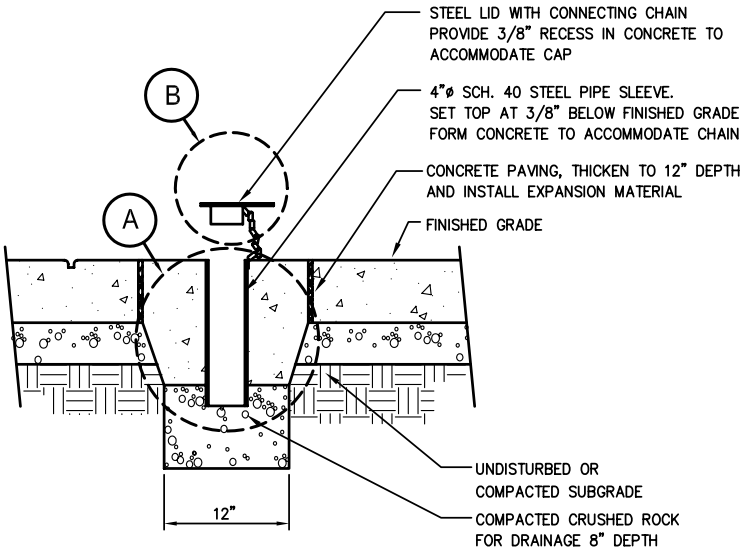

SLEEVE IN CONCRETE SECTION VIEW

NOTE: All pipe sections shall constructed of schedule 40 steel pipe and all components shall be hot dipped galvanized after fabrication.

City of Seattle Department of Parks & Recreation	**REMOVABLE STEEL BOLLARD DETAILS** **STD. DETAIL NO. 12 93 63.23**