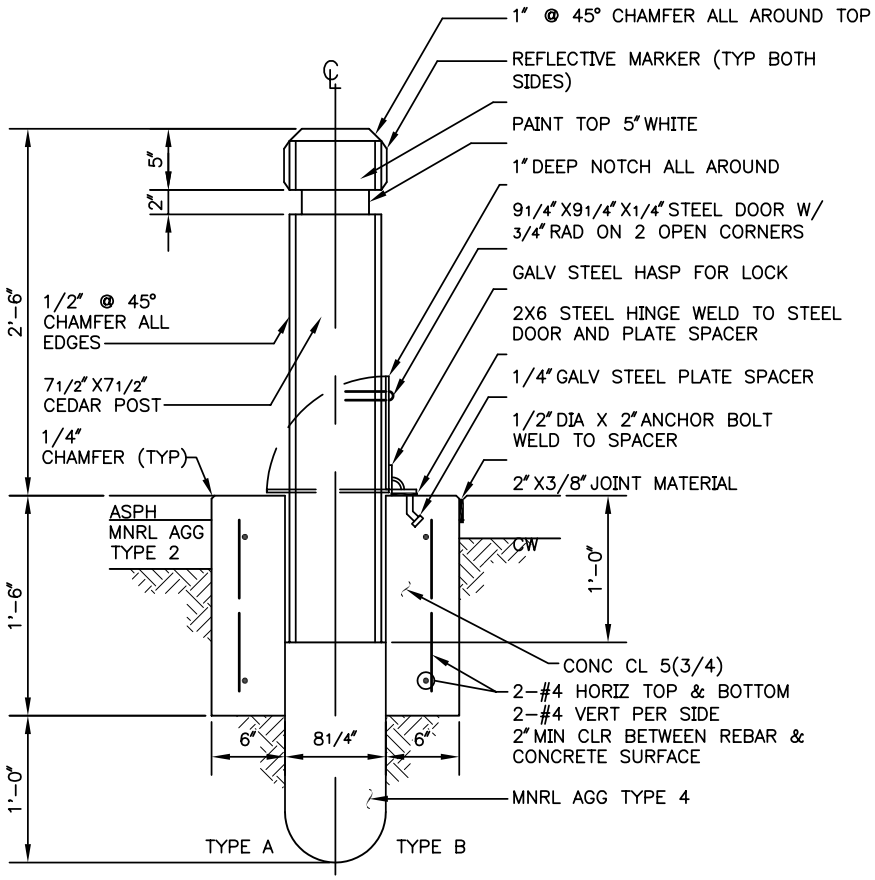

REMOVABLE BOLLARD

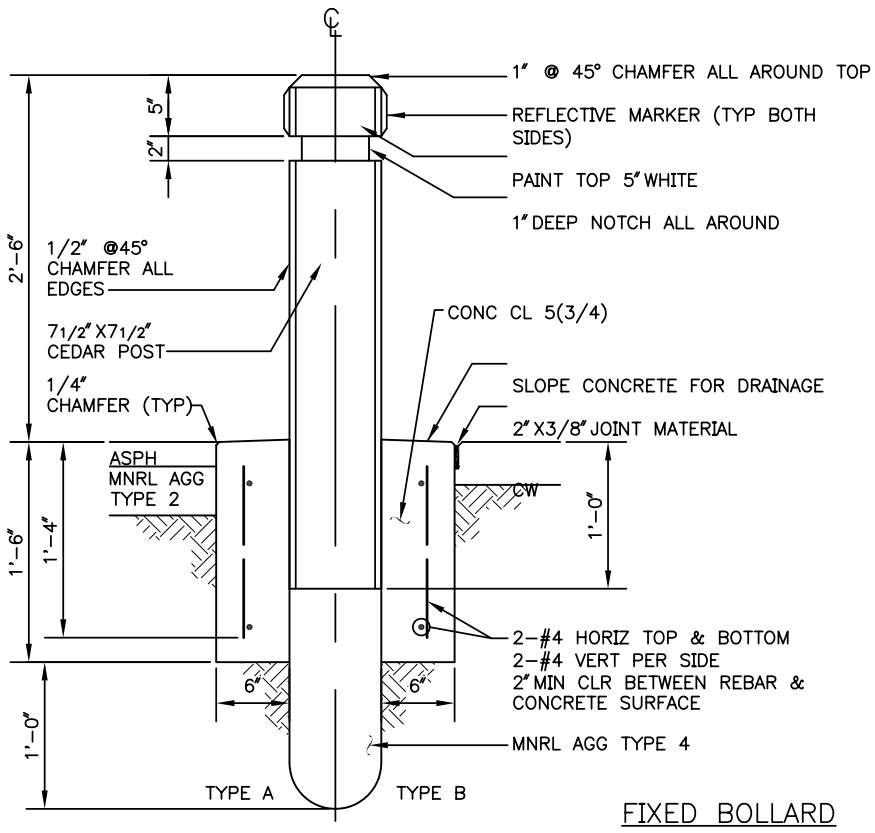

FIXED BOLLARD

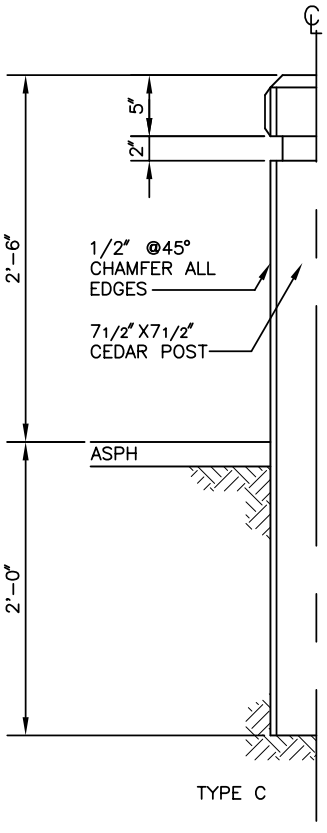

City of Seattle Department of Parks & Recreation	**TREATED WOOD BOLLARD DETAILS** **STD. DETAIL NO. 12 93 63.36**