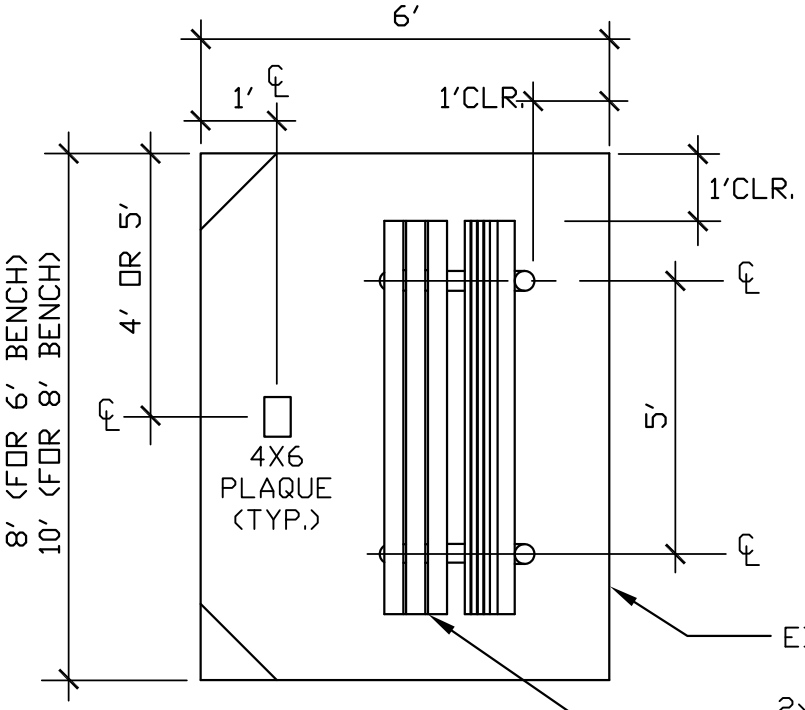

BENCH PLAN

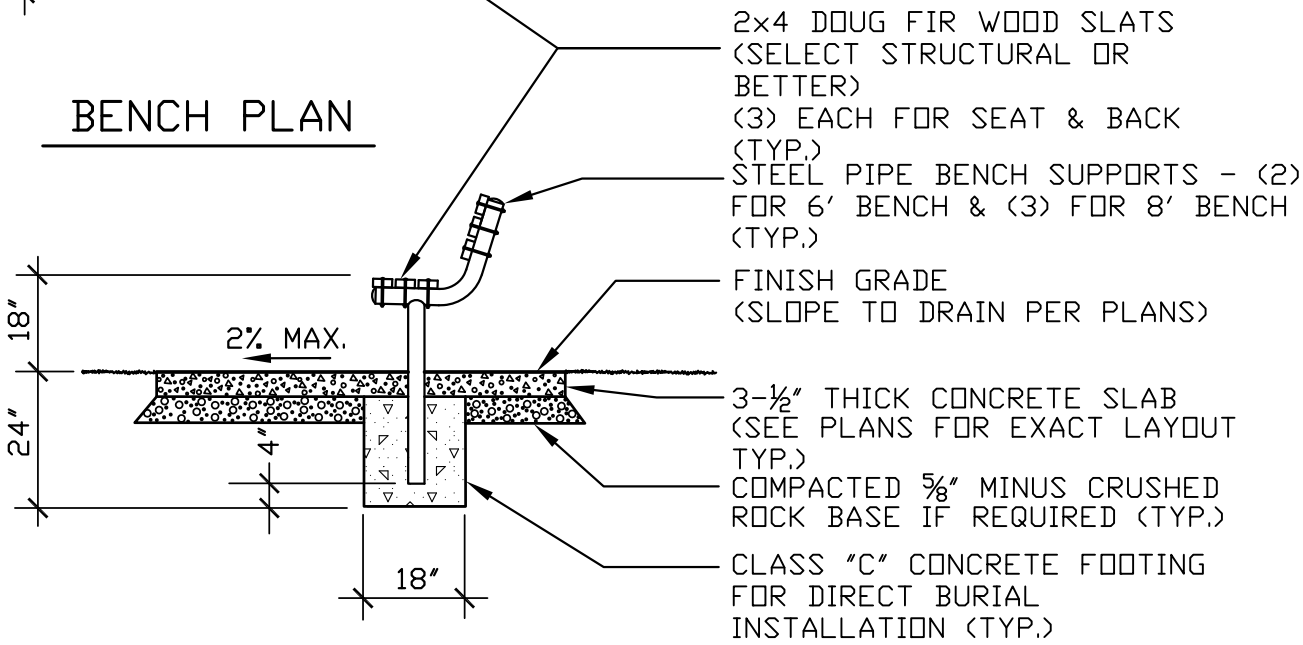

BENCH SECTION

NOTES:

1. STAKE BENCH INSTALLATION LOCATION FOR THE ENGINEER'S APPROVAL PRIOR TO BEGINNING SITE PREPARATION OR FOOTING EXCAVATION.
2. STEEL PIPE BENCH FRAME(S) AND ALL HARDWARE SHALL BE HOT-DIPPED GALVANIZED AFTER FABRICATION.
3. CORNERS OF SLAB CAN BE CHAMFERED AT 45° AS SHOWN IF DESIRED.

City of Seattle Department of Parks & Recreation	**GENERIC PIPE FRAME BENCH DETAILS** **STD. DETAIL NO. 12 93 43.13**