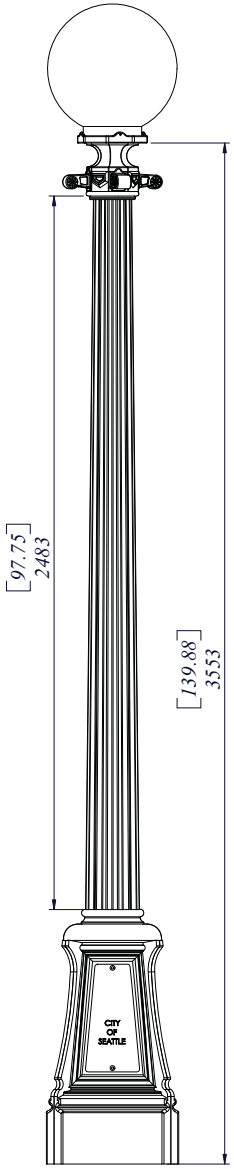

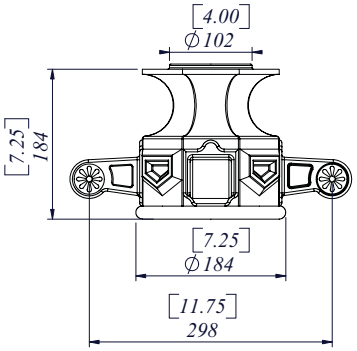

CAPITAL

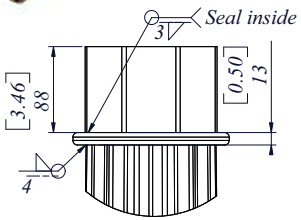

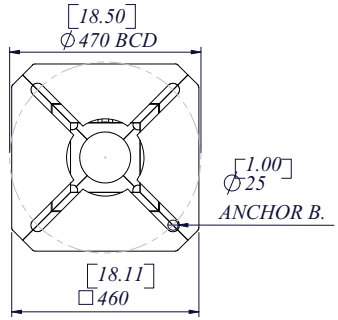

BASE BOTTOM VIEW

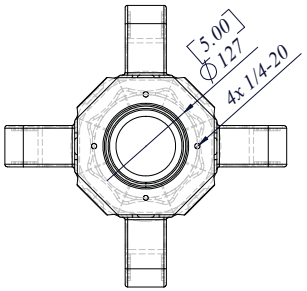

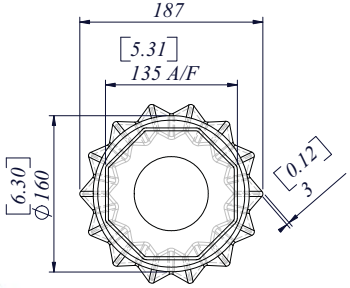

FORMED SHAFT

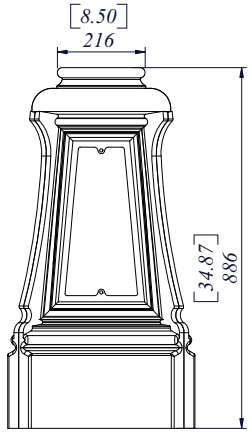

LUMINAIRE HOLDER

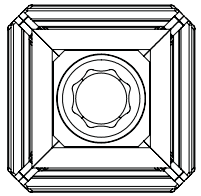

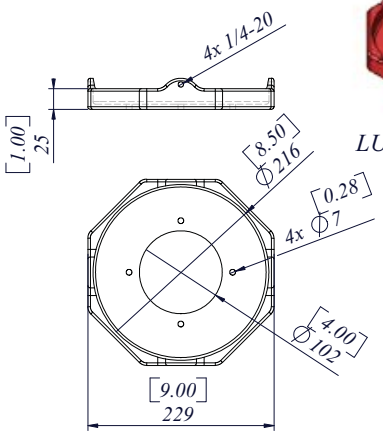

6.3

BREAK UNSPECIFIED SHARP EDGES: 0.5 x 45 °

UNLESS OTHERWISE SPECIFIED DIMENSIONS ARE IN [mm]

TOLERANCES:
xx. +/-0.5 mm
xx.X +/-0.25 mm
xx.XX +/-0.05 mm
Angles +/-0.5°

REV.	REV. DESCRIPTION	REV. DATE	BY
0	INITIAL RELEASE	05/09/2002	ZB

WEST COAST ENGINEERING GROUP
7984 River Road
Delta, B.C. Canada V4G 1E3
Ph.(604)946-1256 Fx.(604)946-1203
www.wceng.com

PROJECT: *City of Seattle*

CITY OF SEATTLE DECORATIVE_POLE

QTY 1

DESIGNED: ZOLTAN BANYI
DRAWN: ZOLTAN BANYI
APPROVED: TED BROCKMAN

JOB NO.
CAD FILE: City Seattle Fluted
REV. 0
SHEET 1 OF 1

Date: 25/07/2002
Scale: 1:1

MATERIAL: AL.
HEAT TREAT:
FINISH:

THE INFORMATION CONTAINED IN THIS DRAWING IS THE PROPERTY OF WEST COAST ENGINEERING GROUP, AND ANY INFORMATION OBTAINED FROM ITS CONTENT SHALL BE USED ONLY FOR THE SPECIFIC PURPOSE AUTHORIZED BY WEST COAST ENGINEERING GROUP.