REV.	ALTERATION	E.C.N.	DATE	BY

KING U.S. ORDER NO.:	CUSTOMER ORDER NO.:
26639	1053127–DIR

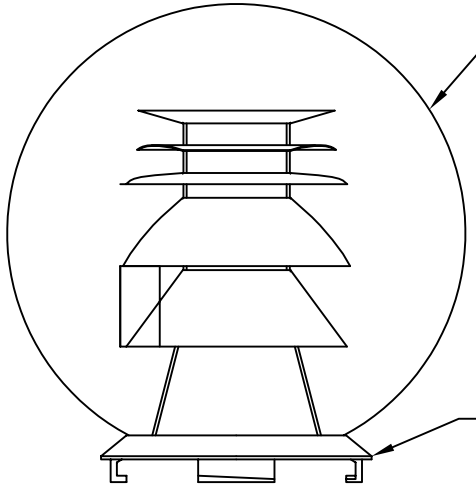

SPECIFICATIONS

CATALOGUE NO.: KG18–LAC(ETCHED)–III–70(MOG)
–HPS–120(MT)–K4
QUANTITY:
GLOBE MAT'L: ACRYLIC (ETCHED)
IES CLASSIFIC.: TYPE III
WATTAGE: 70W
LIGHT SOURCE: HIGH PRESSURE SODIUM
LINE VOLTAGE: 120V (MULTI–TAP)
POLE ADAPTOR: K4
LAMP BY OTHERS

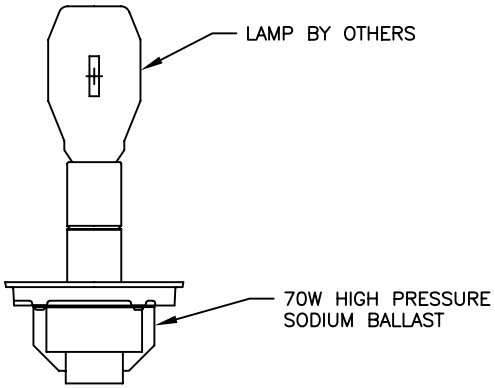

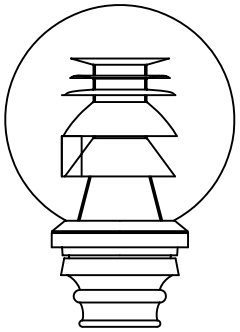

ASSEMBLY VIEW

BALLAST INFORMATION:

BALLAST TYPE: HX–HPF
BALLAST MANUFACTURER: ADVANCE / MAGNETEK
CATALOG NUMBER: S70MLTLC3M / 71A7991

OPTIONS:

QUICK DISCONNECT ☐
TERMINAL BLOCK ☐
OTHER: _____

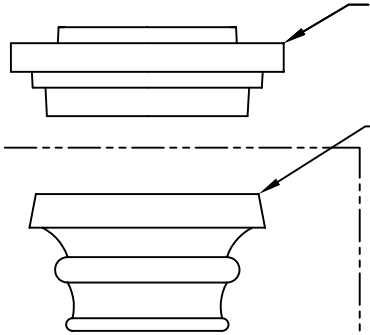

PART	PLANT REFERENCE DWG. #'s	REVISION
GLOBE		
CAPITAL		
OPTICS		
BALLAST		
FINIAL		
OTHERS		

CERT. I.D. CS ☐ ET ☐

CUSTOMER APPROVAL: _____

KING LUMINAIRE COMPANY INC.
840 WALKER'S LINE, P.O. BOX 7, BURLINGTON, ONTARIO, CANADA L7R 3X9
P.O. BOX 266 JEFFERSON, OHIO 1153 STATE ROUTE 46N U.S.A. 44047

DRAWING NAME:	DWG NUMBER	DATE:	DWG BY:	REV.
APPROVAL DWG	26639–4	08/20/02	A.A.	

PROJECT/CUSTOMER:
CIVIC CENTER PLAZA / OPEN SPACE

\KI–ORDER\26639