PROJECT: CITY OF SEATTLE, PUMP STATION NO. 22 (PS22) RETROFIT AND FORCE MAIN REPLACEMENT PROJECT

PROJECT LOCATION/ADDRESS: DUE SOUTH OF 3810 W. CRAMER ST.

LEGAL DESCRIPTION: WEST CRAMER STREET CITY RIGHT-OF-WAY, 40TH AVENUE WEST CITY RIGHT-OF-WAY BETWEEN WEST CRAMER STREET AND WEST COMMODORE WAY, APPROXIMATELY 600 LF EAST IN WEST COMMODORE WAY RIGHT-OF-WAY

SDOT UMP NUMBER: 352177

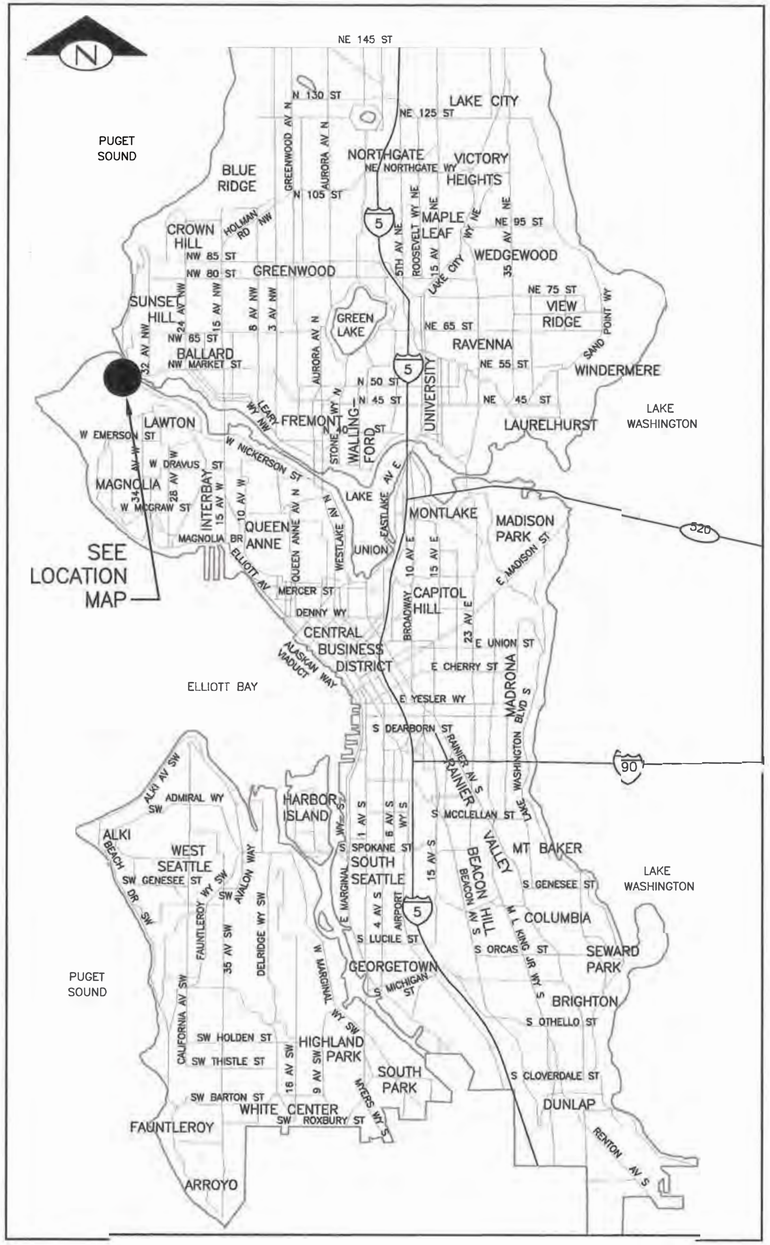

VICINITY MAP

SCALE: 1" = 1 MILE

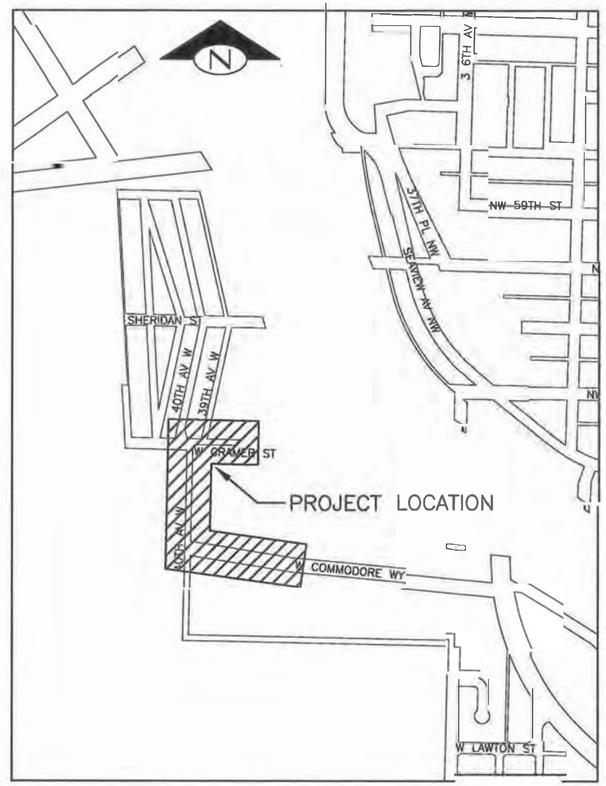

LOCATION MAP

SCALE: 1" = 400'

DETAIL AND SECTION REFERENCING

4 / 9 — DETAIL REFERENCE NUMBER; SHEET ON WHICH DETAIL APPEARS

(TITLE) (SCALE) 4 / 9 — DETAIL REFERENCE NUMBER; SHEET FROM WHICH DETAIL WAS TAKEN

("TYP" SPECIFIES THAT DETAIL IS UNIFORMLY TYPICAL THROUGHOUT PROJECT EXCEPT WHERE OTHERWISE NOTED.)
("VAR" SPECIFIES THAT DETAIL WAS TAKEN FROM SEVERAL SHEETS.)

A — A 32 — SECTION A-A IS SHOWN ON SHEET 32.

SECTION A-A 30 — SECTION A-A IS TAKEN FROM SHEET 30.

VICINITY MAP, LOCATION MAP, DETAIL AND SECTION REFERENCING

G-1

VAULT SERIAL NO.	DATE	MARK	NATURE	MADE	CK'D
37294			REVISIONS		

C:\pw_pr\robinsonjd\d0575331\G1 261-1009_P-COVR.dwg
Robinsonjd Dec-10-18 8:14am

CDM Smith
14432 SE Eastgate Way
Suite 100
Bellevue, WA 98007
Tel: (425) 519-8300

REVIEWED BY SPU/WATER ENGINEERING ..... 20....
REVIEWED BY SPU/DRAINAGE ..... 20....
APPROVED BY SDOT STREET IMPROVEMENT PERMITTING ..... 20....

APPROVED FOR ADVERTISING
LIZ ALZEER
DEPARTMENT OF FINANCE & ADMINISTRATIVE SERVICES
SEATTLE, WASHINGTON 04/25 20 19
BY: IAN KRENNWEG FOR CPCS
CITY PURCHASING & CONTRACTING SERVICES DIRECTOR

INITIALS AND DATE	INITIALS AND DATE
DESIGNED RER 12/06/2018	REVIEWED: DES. CONST. SDOT PROJ. MGR.
CHECKED JNC 12/07/2018	
DRAWN JDR 12/10/2018	RECEIVED
CHECKED CEB 12/10/2018	REVISED AS BUILT

ALL WORK SHALL BE DONE IN ACCORDANCE WITH THE CITY OF SEATTLE STANDARD PLANS AND SPECIFICATIONS AND OTHER DOCUMENTS CALLED FOR IN SECTION 0-02.3 OF THE PROJECT MANUAL.

2018.12.20 18:26:49-02'00'

Seattle Public Utilities

ORDINANCE NO. 125475 PW NO. 2018-064
FUND: DWF
SCALE: AS NOTED

PUMP STATION NO. 22 RETROFIT AND FORCE MAIN REPLACEMENT

JOB NO. PC R/W CO C315071
VAULT PLAN NO. 776-474
SHEET 1 OF 71

SHEET INDEX

SHT NO	DWG NO	DESCRIPTION
GENERAL		
1	G–1	VICINITY MAP, LOCATION MAP, DETAIL & SECTION REFERENCING
2	G–2	INDEX OF DRAWINGS
3	G–3	LEGEND, ABBREVIATIONS, SYMBOLS AND DESIGNATIONS
4	G–4	GENERAL NOTES
5	G–5	EQUIPMENT LIST
EROSION CONTROL		
6	EC–1	EROSION & SEDIMENTATION CONTROL NOTES
7	EC–2	EROSION & SEDIMENTATION CONTROL PLAN
CIVIL		
8	C–0	OVERALL SITE PLAN AND SURVEY CONTROL PLAN
9	C–1	PUMP STATION SITE DEMOLITION PLAN
10	C–2	PUMP STATION SITE RESTORATION PLAN
11	C–3	PUMP STATION SITE RESTORATION PLAN NOTES
12	C–4	PUMP STATION FLOW METER AND BYPASS VAULT DETAIL
13	C–5	FORCE MAIN PLAN & PROFILE – STA 30+56.1 TO STA 32+55.45
14	C–6	FORCE MAIN PLAN & PROFILE – STA 50+20.5 TO STA 55+78.8
15	C–7	GRAVITY SEWER PLAN & PROFILE – STA 69+99.9 TO STA 74+70.0
16	C–8	TIE–IN TO KC FT. LAWTON TUNNEL ENLARGED PLAN AND SECTION
17	C–9	PUMP STATION BYPASS PUMPING PLAN
18	C–10	SEWER DETAIL 1
19	C–11	SEWER DETAIL 2
20	C–12	SEWER DETAIL 3
21	C–13	SEWER DETAIL 4
22	C–14	SEWER DETAIL 5
23	C–15	PAVING, CURB AND SIDEWALK RESTORATION PLAN 1
24	C–16	PAVING, CURB AND SIDEWALK RESTORATION PLAN 2
25	C–17	PAVING, CURB AND SIDEWALK RESTORATION PLAN 3
26	C–18	PAVING DETAILS
27	C–19	ADA CURB RAMP DETAILS
28	C–20	GENERATOR PAD WOOD FENCE
STRUCTURAL		
29	DS–1	STRUCTURAL DEMOLITION PLANS AND SECTIONS
30	S–1	GENERAL NOTES, SPECIAL INSPECTION, ABBREVIATIONS AND LEGEND
31	S–2	TYPICAL DETAILS
32	S–3	ROOF, CONTROL ROOM, WET WELL PLATFORM; AND WET WELL PLANS
33	S–4	SECTIONS AND DETAILS
34	S–5	SECTIONS AND DETAILS
35	S–6	SECTIONS AND DETAILS
36	S–7	SECTIONS AND DETAILS
MECHANICAL		
37	M–1	MECHANICAL LEGEND, ABBREVIATIONS, NOTES
38	M–2	PUMP STATION MECHANICAL DEMOLITION PLAN
39	M–3	PUMP STATION MECHANICAL DEMOLITION SECTIONS
40	M–4	PUMP STATION MECHANICAL PLAN – LOWER FLOOR
41	M–5	PUMP STATION MECHANICAL PLAN – UPPER FLOOR
42	M–6	PUMP STATION – SECTIONS
43	M–7	PUMP STATION – DETAILS

SHEET INDEX (CONT.)

SHT NO	DWG NO	DESCRIPTION
HVAC		
44	H–1	HVAC LEGEND, ABBREVIATIONS, AND GENERAL NOTES
45	H–2	HVAC SCHEDULES
46	H–3	HVAC PLANS
47	H–4	HVAC SECTIONS
48	H–5	HVAC DETAILS
49	H–6	HVAC DETAILS
ELECTRICAL		
50	E–1	ELECTRICAL LEGEND AND ABBREVIATIONS
51	E–2	ELECTRICAL DEMOLITION AND CONSTRUCTION PHASING
52	E–3	ELECTRICAL DEMOLITION PLANS
53	E–4	ELECTRICAL AREA CLASSIFICATION
54	E–5	PUMP STATION ELECTRICAL SITE PLAN
55	E–6	ELECTRICAL AND INSTRUMENTATION PLANS
56	E–7	RECEPTACLE AND LIGHTING DETAILS
57	E–8	ELEVATIONS
58	E–9	ELECTRICAL SECTIONS
59	E–10	ELECTRICAL SECTIONS
60	E–11	SCHEDULES
61	E–12	ONE–LINE DIAGRAM
62	E–13	STANDBY GENERATOR PLAN, ELEVATIONS, DETAILS
63	E–14	ENLARGED PLAN AND DETAILS
64	E–15	WIRING DIAGRAMS
65	E–16	WIRING DIAGRAMS
66	E–17	WIRING DIAGRAMS
67	E–18	ELECTRICAL DETAILS
68	E–19	EQUIPMENT LIST
INSTRUMENTATION		
69	I–1	P&ID GENERAL, SYMBOLS, ABBREVIATIONS, NOTES
70	I–2	P&ID
71	I–3	AE/AIT 2205 GAS DETECTOR PANEL

INDEX OF DRAWINGS
G–2

VAULT SERIAL NO.	DATE	MARK	NATURE REVISIONS	MADE	CHK'D	REV'D
37295						

C:\pw_pif\robinsonjd\d0575331\G2 261-1009_P-INDX.dwg
Robinsonjd Dec-10-18 8:15am

CDM Smith
14432 SE Eastgate Way
Suite 100
Bellevue, WA 98007
Tel: (425) 519-8300

REVIEWED BY SPU/WATER ENGINEERING ..... 20.....
REVIEWED BY SPU/DRAINAGE ..... 20.....
APPROVED BY SDOT STREET IMPROVEMENT PERMITTING ..... 20.....

APPROVED FOR ADVERTISING
LIZ ALZEER
DEPARTMENT OF FINANCE & ADMINISTRATIVE SERVICES
SEATTLE, WASHINGTON . . . . . 20 . . .
BY: . . . . . .
CITY PURCHASING & CONTRACTING SERVICES DIRECTOR

INITIALS AND DATE		INITIALS AND DATE	
DESIGNED REK 12/06/2018		REVIEWED:	
CHECKED JNC 12/07/2018		DES.	CONST.
		SDOT	PROJ. MGR.
DRAWN JDR 12/10/2018		RECEIVED	
CHECKED CEB 12/10/2018		REVISED AS BUILT	

ALL WORK SHALL BE DONE IN ACCORDANCE WITH THE CITY OF SEATTLE STANDARD PLANS AND SPECIFICATIONS AND OTHER DOCUMENTS CALLED FOR IN SECTION 0–02.3 OF THE PROJECT MANUAL.

2018.12.20 18:27:03-02'00'

Seattle Public Utilities
ORDINANCE NO. 125475 PW NO. 2018–064
FUND: DWF
SCALE: NONE

PUMP STATION NO. 22 RETROFIT AND FORCE MAIN REPLACEMENT

JOB NO. PC C315071 R/W CO
VAULT PLAN NO. 776–474
SHEET 2 OF 71

GATE VALVE WITH CHAMBER
REDUCER
GATE VALVE NATURAL GAS VALVE
GATE VALVE
WATER METER
CHECK VALVE
FIRE HYDRANT
BENCHMARK
SURVEY MONUMENT
GUY ANCHOR
JUNCTION BOX
BOLLARD
REMOVABLE BOLLARD
MAINTENANCE HOLES
INLET TYPE 250A
INLET TYPE 250B
INLET TYPE 252
INLET TYPE 268
CATCH BASIN TYPE 240A
CATCH BASIN TYPE 240B
CATCH BASIN TYPE 240C
CATCH BASIN TYPE 240D
CATCH BASIN TYPE 241
CATCH BASIN TYPE 242A
CATCH BASIN TYPE 242B
JUNCTION BOX TYPE 277
CLEAN OUT (STD PLAN 208)
SIGN
CURB RAMP
CONIFEROUS TREE
6" CONC
6" CONC PAV
CEMENT CONCRETE PAVEMENT

24" PS — PIPE SEWER COMBINED ≥ 1'–0" DIA
8" PS — PIPE SEWER COMBINED < 1'–0" DIA
6" SS — SIDE SEWER COMBINED
8" PS FM — PIPE SEWER FORCE MAIN < 1'–0" DIA
PIPE SEWER FORCE MAIN ≥ 1'–0" DIA
6" SSS — SIDE SEWER SANITARY
24" PSD — PIPE STORM DRAIN ≥ 1'–0" DIA
8" PSD — PIPE STORM DRAIN < 1'–0" DIA
8" SD — SERVICE DRAIN
INLET & CB CONNECTION
8" PSD — OPEN ENDED PIPE
8" W — WATERMAIN OR WATER SERVICE < 1'–0" DIA
20" W — WATERMAIN ≥ 1'–0" DIA
DITCH
12" CC — CONCRETE CULVERT
CURB
ELECTRICAL CABLE, DIRECT BURIED
OHP — OVERHEAD POWER
2" GAS — GAS MAINLINES AND SERVICES
ROADWAY CENTER
X — CHAIN LINK FENCES
WOOD FENCE
PICKET FENCE
HANDRAIL
ROCK FACING
ROCK FACING
RIPRAP
CENTER LINE
SURVEY LINE
RIGHT OF WAY LINE
LOT & OWNERSHIP LINE
BUILDING
DEMOLITION
GRAVEL WALKWAY
GRASS
AMENDED SOIL RESTORED LANDSCAPED BUFFER WITH SEEDING
PERVIOUS CONCRETE SURFACE OR SIDEWALK

ABAN	ABANDON(ED)
ACP	ASPHALT CONCRETE PAVEMENT
ADA	AMERICANS WITH DISABILITIES ACT
ADJ	ADJUST
AGG	AGGREGATE
AHD	AHEAD
AIC	AERIAL INTERCONNECT CABLE
AL	ALUMINUM
AP	ANGLE POINT
APP	APPROVED
APPROX	APPROXIMATE
APWA	AMERICAN PUBLIC WORKS ASSOCIATION
ASPH	ASPHALT
ATB	ASPHALT TREATED BASE
AV	AIR VALVE
AVG	AVERAGE
AWWA	AMERICAN WATER WORKS ASSOCIATION
B/C	BARRIER CURB
BC	BOLT CIRCLE, BACK OF CURB (ELEV)
BF	BOTTOM FACE
BFV	BUTTERFLY VALVE
BK	BACK
BLDG	BUILDING
BLRD	BOLLARD
BM	BENCH MARK
BOC	BEGINNING OF CURB
BOS	BOTTOM OF STAIRS (LANDING)
BPD	BACKFLOW PREVENTION DEVICE
BV	BALL VALVE
BVC	BEGINNING OF VERTICAL CURVE
BW	BACK OF WALK (ELEV)
C/G	CURB & GUTTER
CB	CABLE, CATCH BASIN
C–C	CENTER TO CENTER
CD	CONDUIT
CDF	CONTROLLED DENSITY FILL
CEM	CEMENT
CF	CUBIC FEET
CIP	CAST IRON PIPE
CL	CLASS
℄	CENTERLINE
CLR	CLEARANCE
CO	CLEAN OUT
CONC	CONCRETE
CONN	CONNECT/CONNECTION
CONSTR	CONSTRUCTION
CONT	CONTINUOUS
COS	CITY OF SEATTLE
CR	CROSS, CURB RADIUS
CULV	CULVERT
CW	CONCRETE WALK
CY	CUBIC YARD
D	DRAIN
DEPT	DEPARTMENT
DIA OR ø	DIAMETER
DIP OR DI	DUCTILE IRON PIPE
DR	DRIVE
DWG	DRAWING
DWY	DRIVEWAY
E	EAST
EA	EACH/EXHAUST AIR
ECB	ELECTRIC CABLE (DIRECT BURIAL)
ECC	ECCENTRIC
ECD	ELECTRICAL CONDUIT
EG	EXISTING GRADE
EL/ELEV	ELEVATION
ENCL	ENCLOSURE
ENGR	ENGINEER
EOC	END OF CURB
EQ	EQUAL
ESMT	EASEMENT
EV	ELECTRICAL VAULT
EVC	END OF VERTICAL CURB
EX	EXISTING
EXP	EXPANSION
FC	FACE OF CURB
FDN	FOUNDATION
FF	FAR FACE, FINISHED FLOOR
FG	FINISHED GRADE
FHWA	FEDERAL HIGHWAY ADMINISTRATION
FL	FLOW LINE/GRADE PT (ELEV)
FLG	FLANGE
FLR	FLOOR
FM	FORCE MAIN
FS	FAR SIDE
FT	FEET
FTG	FOOTING
G	GAS
G REG	GAS REGULATOR
GA	GAUGE
GAL	GALLON
GALV	GALVANIZE/GALVANIZED
GAS V	GAS VALVE
GM	GAS METER
GND	GROUND
GPM	GALLONS PER MINUTE
GR	GRADE
GSP	GENERAL SPEC PROVISIONS
GV	GATE VALVE
GVC	GATE VALVE CHAMBER
GVL	GRAVEL
HB	HORIZONTAL BEND
HDPE	HIGH DENSITY POLYETHYLENE
HGL	HYDRAULIC GRADE LINE
HH	HANDHOLE
HI	HIGH
HMA	HOT MIX ASPHALT
HORIZ	HORIZONTAL
HR	HOUR
HT	HEIGHT
HYD	HYDRANT
ID	INSIDE DIAMETER/DIMENSION
IE	INVERT ELEVATION
IF	INSIDE FACE
IN	INCH(ES)
INL	INLET
INT	INTERSECTION
INV	INVERT (LINE)
JB	JUNCTION BOX
JT	JOINT
LBS	POUNDS
LF	LINEAR/LINEAL FEET
LOC	LOCATE/LOCATION
LONGIT	LONGITUDINAL
LT	LEFT
MAX	MAXIMUM
MH	MAINTENANCE HOLE
MIN	MINIMUM
MISC	MISCELLANEOUS
MJ	MECHANICAL JOINT
MNRL AGG	MINERAL AGGREGATE
MON	MONUMENT
MW, MC	MONITORING WELLS
N	NORTH
N: E:	NORTHINGS & EASTINGS
NAD	NORTH AMERICAN DATUM
NAVD	NORTH AMERICAN VERTICAL DATUM
NF	NEAR FACE
NGVD	NATIONAL GEODETIC VERTICAL DATUM
NIC	NOT IN CONTRACT
NO	NUMBER
NS	NEAR SIDE
NTS	NOT TO SCALE
OC	ON CENTER
OD	OUTSIDE DIAMETER/DIMENSION
OF	OUTSIDE FACE
OH	OVERHEAD
OWS	OIL WATER SEPARATOR
PAV	PAVEMENT
PC	POINT OF CURVATURE
PCC	POINT OF COMPOUND CURVE
PE	PLAIN END
PI	POINT OF INTERSECTION
ℙ	PROPERTY LINE
POC	POINT OF CURVE
PRC	POINT OF REVERSE CURVE
PROP	PROPOSED
PRKG	PARKING
PS	PIPE SEWER COMBINED
PSD	PIPE STORM DRAIN
PSI	POUNDS PER SQUARE INCH
PSS	PIPE SEWER SANITARY
PT	POINT OF TANGENCY
PVC	POLYVINYL CHLORIDE
QTY	QUANTITY
R	RADIUS
R&R	REMOVE AND REPLACE
R/W OR ROW	RIGHT OF WAY
RCP	REINFORCED CONCRETE PIPE
RD	ROOF DRAIN
RDWY	ROADWAY
RECONN	RECONNECT
RED	REDUCER
REINF	REINFORCE/REINFORCEMENT
RELOC	RELOCATE
REM	REMOVE
REPL	REPLACE
REQD	REQUIRED
RET WALL	RETAINING WALL
RT	RIGHT
RWL	RAIN WATER LEADER
S	SOUTH
SCB	SEWER COMBINED CATCH BASIN
SCH	SCHEDULE
SDMH	STORM DRAIN MH
SDOT	SEATTLE DEPARTMENT OF TRANSPORTATION
SEC	SECTION
SIP	STREET IMPROVEMENT PLANS
SMH	SEWER MH (COMBINED)
SPCS	SPACES
SPEC	SPECIFICATIONS
SPU	SEATTLE PUBLIC UTILITIES
SQ	SQUARE
SS	STAINLESS STEEL, SIDE SEWER–COMBINED
SMH	SANITARY SEWER MH
SSS	SIDE SEWER–SANITARY
ST	STREET
STA	STATION
STD	STANDARD
STL	STEEL
STL P	STEEL PIPE
STRUCT	STRUCTURE/STRUCTURAL
SW	SIDEWALK
SY	SQUARE YARD
SYS	SYSTEM
T	TEE
TB	TEST BORING
TC	TOP OF CURB (ELEV)
TCB	TELEPHONE CABLE (DIRECT BURIAL)
TCD	TELEPHONE CONDUIT
TEMP	TEMPORARY
TF	TOP FACE
TN	TON
TOS	TOP OF STAIRS (LANDING)
TVCB	TELEVISION CABLE (DIRECT BURIAL)
TYP	TYPICAL
UG	UNDERGROUND
V	VALVE, VARIABLE
V/C	VERTICAL CURVE
VB	VERTICAL BEND
VBOX	VALVE BOX
VEH	VEHICLE
VERT	VERTICAL
W	WATER, WEST
W/	WITH
WCR	WALKWAY CURB RAMP
WM	WATER METER, WATER MAIN
WMR	WATER MAIN RADIUS
WS	WATER SERVICE
WV	WATER VALVE

LEGEND, ABBREVIATIONS, SYMBOLS AND DESIGNATIONS

G–3

VAULT	SERIAL NO.	DATE	MARK	NATURE REVISIONS	MADE	CHK'D	REV'D
	37295						

C:\pw_pl\robinsonjd\d0575331\G3 261–1009_P–SYMB.dwg
Robinsonjd Dec–10–18 8:16am

CDM Smith
14432 SE Eastgate Way
Suite 100
Bellevue, WA 98007
Tel: (425) 519-8300

REVIEWED BY SPU/WATER ENGINEERING ..... 20.....
REVIEWED BY SPU/DRAINAGE ..... 20.....
APPROVED BY SDOT STREET IMPROVEMENT PERMITTING ..... 20.....

APPROVED FOR ADVERTISING
LIZ ALZEER
DEPARTMENT OF FINANCE & ADMINISTRATIVE SERVICES
SEATTLE, WASHINGTON . . . . . 20 . . .
BY: . . . . . .
CITY PURCHASING & CONTRACTING SERVICES DIRECTOR

INITIALS AND DATE		INITIALS AND DATE	
DESIGNED REK 12/06/2018		REVIEWED:	
CHECKED JNC 12/07/2018		DES.	CONST.
		SDOT	PROJ. MGR.
DRAWN JDR 12/10/2018		RECEIVED	
CHECKED CEB 12/10/2018		REVISED AS BUILT	

ALL WORK SHALL BE DONE IN ACCORDANCE WITH THE CITY OF SEATTLE STANDARD PLANS AND SPECIFICATIONS AND OTHER DOCUMENTS CALLED FOR IN SECTION 0–02.3 OF THE PROJECT MANUAL.

STATE OF WASHINGTON
CHRISTOPHER E. BOWMAN
45360
PROFESSIONAL ENGINEER
2018.12.20 18:27:33-02'00'

Seattle Public Utilities
ORDINANCE NO. 125475 PW NO. 2018–064
FUND: DWF
SCALE: NONE

PUMP STATION NO. 22 RETROFIT AND FORCE MAIN REPLACEMENT

JOB NO. PC C315071 R/W CO
VAULT PLAN NO. 776–474
SHEET 3 OF 71

GENERAL NOTES ON PLANS FOR SEWER MAINS

UNLESS OTHERWISE NOTED:

1. ALL PIPE, APPURTENANCES AND WORK MUST CONFORM TO THE CITY OF SEATTLE STANDARD PLANS AND SPECIFICATIONS, 2017 EDITION.
2. ALL MATERIALS MUST BE NEW.
3. DUCTILE IRON 4" AND LARGER MUST BE DIP CL. 52 CONFORMING TO AWWA C–151 WITH DOUBLE THICKNESS CEMENT MORTAR LINING CONFORMING TO AWWA C–104. ALL JOINTS SHALL BE RESTRAINED JOINT.
4. UNLESS PROVIDED BY A PRE–APPROVED MANUFACTURER, PIPE 4" AND LARGER AND LINING MATERIAL MUST BE SUBJECT TO SPU TASTE TESTING PROCEDURES PRIOR TO INSTALLATION.
5. ALL DUCTILE IRON FITTINGS MUST BE DUCTILE IRON CONFORMING TO AWWA C–110 AND C–111, OR AWWA C–153, AND BE DOUBLE THICKNESS CEMENT MORTAR LINED CONFORMING TO AWWA C–104.
6. CARE MUST BE EXERCISED WHEN EXCAVATING NEAR EXISTING PRESSURIZED WATER MAINS OR SEWER LINES.
7. LOCATIONS SHOWN FOR EXISTING UNDERGROUND UTILITIES ARE APPROXIMATE. UTILITIES HAVING NO RECORDED DEPTH ARE SHOWN AT THEIR STANDARD DEPTH. WATER/SEWER SEPARATION MUST BE PER STANDARD PLAN #286. IT IS THE CONTRACTOR'S RESPONSIBILITY TO REPLACE CAST IRON WATER MAINS WITH DUCTILE IRON PIPE WHERE SEWERS ARE INSTALLED ABOVE OR CLOSER THAN 10 FEET, OR CROSS OVER ANY WATER LINE. SEE SPECIAL PROVISIONS FOR MINIMUM CLEARANCES AT SECTION 1–07.17(2)D REGARDING CROSSING OF GAS MAINS.
8. THE SEWER FORCE MAINS IS TO BE SUBJECTED TO HYDROSTATIC STATIC PRESSURE TESTING IN ACCORDANCE WITH SECTION 7–17.3(4)E OF THE STANDARD SPECIFICATION WITH A MINUMIMUM HYDROSTATIC PRESSURE OF 110 PSI AT THE LOWPOINT. THE GRAVITY SEWER ON COMMODORE WAY MUST BE SUBJECTED TO AIR PRESURE TESTING AS PER SECTION 7–17.3(4)D. ALL PRESSURE TESTING MUST BE DONE IN THE PRESENCE OF THE RESIDENT ENGINEER. THE CONTRACTOR IS TO PROVIDE PLUGS AND TEMPORARY BLOWOFF ASSEMBLIES FOR PRESSURE TESTING.
9. DI PIPE AND FITTINGS MUST BE BAGGED WITH 8 MIL POLYETHYLENE, CONFORMING TO AWWA C–105.
10. ALL DI PIPE AND FITTINGS MUST BE RESTRAINED PER SECTION 9–30.2(6).
11. TRENCH BACKFILL FOR PIPE WITH PROTECTIVE COATING OR POLYETHYLENE ENCASEMENT MUST BE PER STANDARD PLAN #350. CLASS B BEDDING NOTED SHALL BE MINERAL AGGREGATE TYPE 7.
12. JOINT BONDING SHALL BE PER STANDARD PLAN #362.
13. SIDE SEWER CONNECTIONS AND INSTALLATION TO CONFORM TO SECTION 7–18. MAINTAIN SIDE SEWER FLOWS AT ALL TIMES.
14. PIPE TRENCH CROSSING UTILITIES TO BE PROTECTED AND SUPPORTED DURING EXCAVATION, PIPE INSTALLATION, AND BACKFILL. SUBMIT SUPPORT DETAILS FOR ALL WATER MAIN CROSSINGS FOR ENGINEERING REVIEW.
15. FOR ALL TEES, THE CENTER POINT OF THE TEE MUST BE INSTALLED NO LOWER THAN 30° AND NOT HIGHER THAN 45° ABOVE THE SPRINGLINE OF THE MAINLINE.
16. TEES SHALL BE PREFABRICATED AND WHEN CONNECTING TO A DISSIMILAR PIPE MATERIAL, MUST BE NO BELL TEES AND CONNECTED USING A SHIELDED FLEXIBLE REPAIR COUPLING PER SPECIFICATION 7–17.3(2)E AND 9–05.18.
17. INVERT ELEVATIONS AT MAINTENANCE HOLES ARE MEASURED AT CENTER OF STRUCTURE.
18. ALL WATER PIPELINES AND APPURTENANCES MUST BE CLEANED AND TESTED AFTER BACKFILLING PER SPECIFICATION 7–17.3(3). DEFLECTION TESTING OF FLEXIBLE PIPE MUST BE NO LESS THAN 30 DAYS AFTER BACKFILLING AND PRIOR TO PAVING PER SPECIFICATION 7–17.3(3)F. TELEVISION INSPECTION MUST BE PER SPECIFICATION 7–17.3(3)G.
19. WHERE A NEW PIPE CLEARS AN EXISTING OR NEW UTILITY BY 6–INCHES OR LESS, POLYTHYLENE PLASTIC FOAM MUST BE PLACED AS A CUSHION BETWEEN THE UTILITIES PER SPECIFICATION 1–07.17(2).

PROTECTION OF EXISTING UTILITIES

UNLESS OTHERWISE NOTED:

1. THE LOCATION OF EXISTING UTILITIES AND OTHER UNDERGROUND STRUCTURES SHOWN ON THE DRAWINGS IS APPROXIMATE AND THEIR ACTUAL LOCATIONS MAY VARY FROM THAT SHOWN. CONTRACTOR SHALL DETERMINE THE EXACT LOCATION OF ALL UNDERGROUND FEATURES THAT MAY BE AFFECTED BY THE WORK. CONTRACTOR TO PROTECT ALL UTILITIES (EXCEPT THOSE DESIGNATED FOR REMOVAL) AND STRUCTURES.
2. ALL EXCAVATIONS ADJACENT TO CITY LIGHT POLES OR OTHER INSTALLATIONS MUST COMPLY WITH THE WASHINGTON ADMINISTRATION CODE (WAC) SAFETY STANDARDS FOR CONSTRUCTION WORK, PART N. SITE SAFETY PROCEDURES AND EXCAVATION PROTECTIVE SYSTEMS SHALL SPECIFICALLY COMPLY WITH WAC 296–155–650, EXCAVATION, TRENCHING, & SHORING.
3. MAINTAIN 10' CLEARANCE FROM OVERHEAD HIGH VOLTAGE POWER LINES. CONTACT AND COORDINATE WITH SCL ON ANYTHING THAT AFFECTS SCL. CONTACT SCL CUSTOMER SERVICE REPRESENTATIVE FOR QUESTIONS OR DETAILS.
4. CONTACT SCL FOR STANDBY AS NEEDED. OBSERVE ALL OSHA/WISHA REGULATIONS WHILE WORKING IN OVERHEAD AREAS.
5. CONTACT SCL IF VAULT/HANDHOLE COVERS NEED TO BE RESET TO NEW GRADES. UNESCORTED ENTRY TO ENERGIZED FACILITIES IS PROHIBITED.

PROTECTION OF EXISTING UTILITIES (CONTINUED)

UNLESS OTHERWISE NOTED:

6. FOR ACCEPTABLE CLEARANCE FROM SCL, PLEASE SEE SCL CONSTRUCTION STANDARD 214.00. LOCATIONS, DIMENSIONS AND DEPTHS OF SCL'S VAULTS, MANHOLES, HANDHOLES AND DUCTBANKS WITHIN THE PLANS AFFECTING AREAS MUST BE VERIFIED (E.G. POT HOLE) PRIOR TO CONSTRUCTION TO AVOID ANY DAMAGES TO EXISTING SCL FACILITIES.
7. CONTRACTOR MUST EXERCISE CARE WHEN EXCAVATING NEAR SCL FACILITIES AND SHALL CONTACT SEATTLE CITY LIGHT TO ARRANGE A SAFETY STANDBY WHEN EXCAVATING WITHIN 5–FEET OF SCL ELECTRICAL FACILITIES.
8. WATER MAINS. CAST IRON WATER MAINS ARE KNOWN TO BE SENSITIVE TO EXCESSIVE VIBRATION.

GENERAL NOTES

UNLESS OTHERWISE NOTED:

1. ALL WORK MUST CONFORM TO THE 2017 EDITION OF CITY OF SEATTLE STANDARD SPECIFICATIONS, THE 2017 EDITION OF THE CITY OF SEATTLE STANDARD PLANS. A COPY OF THESE DOCUMENTS MUST BE ON SITE DURING CONSTRUCTION.
2. ALL RESTORATION WORK IN THE RIGHT–OF–WAY MUST CONFORM TO THE SEATTLE DEPARTMENT OF TRANSPORTATION DIRECTOR'S RULE 01–2017 RIGHT–OF–WAY OPENING AND RESTORATION RULES. A COPY OF THESE DOCUMENTS MUST BE ON SITE DURING CONSTRUCTION.
3. A COPY OF THE APPROVED PLAN MUST BE ON SITE WHENEVER CONSTRUCTION IS IN PROGRESS.
4. ALL PERMITS REQUIRED FOR WORK WITHIN THE PUBLIC RIGHT OF WAY MUST BE OBTAINED PRIOR TO THE START OF CONSTRUCTION.
5. CONTRACTOR MUST CONTACT SEATTLE DEPARTMENT OF TRANSPORTATION, STREET USE INSPECTOR A MINIMUM OF 2 BUSINESS DAYS PRIOR TO NEEDING AN INSPECTION.
6. ALL DAMAGE TO CITY INFRASTRUCTURE CAUSED BY THE CONSTRUCTION MUST BE IMMEDIATELY REPORTED TO THE ENGINEER AND REPAIRED AS REQUIRED BY THE ENGINEER. TO REPORT DAMAGE TO SPU INFRASTRUCTURE, INCLUDING ANY SEWAGE RELEASE OR BLOCKAGE, CALL 206–386–1800.
7. NOT USED.
8. SURVEYING AND STAKING OF ALL IMPROVEMENTS IN THE PUBLIC RIGHT OF WAY MUST BE DONE IN ACCORDANCE WITH SECTION 1–05.5 AND COMPLETED PRIOR TO CONSTRUCTION. CONTRACTOR MUST STAKE THE CURB AT THE CENTERLINE OF DRAINAGE GRATES PER STANDARD PLAN 260A. SURVEY CUT SHEETS MUST BE SUBMITTED AND APPROVED BY THE ENGINEER AT LEAST 5 BUSINESS DAYS PRIOR TO CONSTRUCTION.
9. THE CONTRACTOR IS RESPONSIBLE FOR REFERENCING AND REPLACING ALL MONUMENTS THAT MAY BE DISTURBED, DESTROYED OR REMOVED BY THE PROJECT AND MUST FILE AN APPLICATION FOR PERMIT TO REMOVE OR DESTROY A SURVEY MONUMENT WITH THE WASHINGTON STATE DEPARTMENT OF NATURAL RESOURCES, PURSUANT TO RCW 58.24.040(8).
10. THE CONTRACTOR MUST NOTIFY THE SEATTLE FIRE DEPARTMENT DISPATCHER (206–386–1495) AT LEAST TWENTY–FOUR (24) HOURS IN ADVANCE OF ALL WATER SERVICE INTERRUPTIONS, HYDRANT SHUTOFFS, AND STREET CLOSURES OR OTHER ACCESS BLOCKAGE. THE CONTRACTOR MUST ALSO NOTIFY THE DISPATCHER OF ALL NEW, RELOCATED, OR ELIMINATED HYDRANTS RESULTING FROM THIS WORK.
11. THE CONTRACTOR MUST LOCATE AND PROTECT ALL CASTINGS AND UTILITIES DURING CONSTRUCTION.
12. THE CONTRACTOR MUST CONTACT THE UNDERGROUND UTILITIES LOCATOR SERVICE (811) AT LEAST 48 HOURS PRIOR TO CONSTRUCTION.
13. THE CONTRACTOR MUST ADJUST ALL EXISTING MH RIMS, DRAINAGE STRUCTURE LIDS, VALVE BOXES, AND UTILITY ACCESS STRUCTURES TO FINISH GRADE WITHIN AREAS AFFECTED BY THE PROPOSED IMPROVEMENTS.
14. THE CONTRACTOR MUST FOLLOW SPU CORE TAP PROCEDURES FOR ALL NEW CONNECTIONS TO EXISTING SEWER OR DRAINAGE MAINS OR STRUCTURES. CONTRACTORS ARE NOT ALLOWED TO CORE INTO MAINS OR STRUCTURES WITHOUT PRIOR APPROVAL FROM SPU–DWW. TO SCHEDULE CORE CUTS, CONTACT SPU–DWW AT 206–615–0511 A MINIMUM OF 2 BUSINESS DAYS IN ADVANCE.
15. ALL DISTURBED SOILS MUST BE AMENDED PER STANDARD PLAN 142 AND SECTION 8–02 OF THE STANDARD SPECIFICATIONS UNLESS WITHIN ONE FOOT OF A CURB OR SIDEWALK, THREE FEET OF A UTILITY STRUCTURE (E.G. WATER METER, UTILITY POLE, HAND HOLE, ETC.), OR THE DRIPLINE OF AN EXISTING TREE.
16. ALL TRAFFIC CONTROL MUST BE IN ACCORDANCE WITH THE CITY OF SEATTLE TRAFFIC CONTROL MANUAL FOR IN–STREET WORK. AN APPROVED TRAFFIC CONTROL PLAN WILL BE REQUIRED FOR ALL ARTERIAL STREETS PRIOR TO BEGINNING CONSTRUCTION.
17. THE CONTRACTOR MUST NOTIFY KING COUNTY METRO AT 684–2732 FOURTEEN DAYS IN ADVANCE OF ANY IMPACT TO TRANSIT OPERATIONS.
18. COORDINATE SIGN AND PAY STATION REMOVAL AND INSTALLATION WITH SEATTLE DEPARTMENT OF TRANSPORTATION AT 684–5370. SIGNPOSTS ARE TO BE INSTALLED IN ACCORDANCE WITH STANDARD PLANS 616, 620, 621A, 621B, 625, & 626.
19. ALL STREET NAME SIGNS MUST BE INSTALLED BY SEATTLE DEPARTMENT OF TRANSPORTATION.

GENERAL NOTES (CONTINUED)

UNLESS OTHERWISE NOTED:

20. NOT USED.
21. THE CONTRACTOR MUST CONTACT SEATTLE DEPARTMENT OF TRANSPORTATION, STREET USE INSPECTOR A MINIMUM OF 2 BUSINESS DAYS PRIOR TO PLANTING FOR INSPECTION OF STREET TREES AND LANDSCAPING.
22. UNLESS OTHERWISE NOTED IN THE CONTRACT, THE CONTRACTOR MUST CONTACT THE SEATTLE DEPARTMENT OF PARKS AND RECREATION TO APPLY FOR A SEPARATE PERMIT IF WORKING WITHIN A DESIGNATED PARK BOULEVARD.
23. GROUND SURFACES DISTURBED DURING CONSTRUCTION MUST BE RESTORED IN KIND. FOR REQUIREMENTS REGARDING THE PROTECTION AND RESTORATION OF PUBLIC AND PRIVATE PROPERTY SEE SECTIONS 1–07.16 AND .17. OF THE CITY OF SEATTLE STANDARD SPECIFICATIONS.
24. BEFORE DIGGING, VERIFY ALL UTILITY LOCATIONS AND CALL "BEFORE YOU DIG" AT 811. SEE CITY OF SEATTLE STANDARD SPECIFICATIONS 1–07.17(1).
25. CONTRACTOR IS RESPONSIBLE FOR STREET USE PERMITS AND PARKING FEES. SEE SECTION 1–07.6 PERMITS OF THE CITY OF SEATTLE STANDARD SPECIFICATIONS.
26. THE CONTRACTOR IS RESPONSIBLE FOR TRIMMING TREES FOR OVERHEAD CLEARANCE; THIS MUST BE COORDINATED WITH SDOT URBAN FORESTRY (TREES AND LANDSCAPING PROGRAM) PHONE:206–684–TREE(8733) EMAIL:SEATTLE.TREES@SEATTLE.GOV ENGINEER, PROVIDE NAME AND PHONE NUMBER/EMAIL)TWO WEEKS IN ADVANCE.
27. THE CONTRACTOR IS RESPONSIBLE FOR DETERMINING THE EXTENT OF ANY HAZARD CREATED BY OVERHEAD POWER. THE CONTRACTOR MUST MEET WITH UTILITY OWNERS PRIOR TO CONSTRUCTION AND MUST TAKE WHATEVER PRECAUTIONS ARE REQUIRED BY LAW AND REGULATIONS, UTILITY OWNERS OR SAFE CONSTRUCTION PRACTICES. SEE CITY OF SEATTLE STANDARD SPECIFICATIONS 1–05.2(2) AND 1–07.28.
28. ALL WORK MUST BE PERFORMED IN ACCORDANCE WITH ALL PERMITS INCLUDED IN THE PROJECT MANUAL AND OBTAINED BY THE CONTRACTOR.
29. ERRORS AND OMISSIONS ON THE PERMITTED PLANS MUST BE CORRECTED BY THE ENGINEER AND APPROVED BY THE CITY OF SEATTLE.
30. THE APPROVED PLANS SHOW THE APPROXIMATE AREA OF PAVEMENT RESTORATION BASED ON THE DEPTH OF UTILITY CUTS AND/OR THE AREA OF CURB AND/OR PAVEMENT TO BE REMOVED AND REPLACED. THE ACTUAL LIMITS OF THE PAVEMENT RESTORATION SHALL BE PER SEATTLE DEPARTMENT OF TRANSPORTATION DIRECTOR'S RULE 01–2017, THE RIGHT–OF–WAY OPENING AND RESTORATION RULES (ROWORR).
31. "REPLACE" AS NOTED ON THE PLANS INDICATES REMOVAL OF EXISTING PIPE, FITTINGS AND VALVES AND REPLACEMENT WITH NEW PIPE, FITTINGS AND VALVES.
32. IT IS THE SOLE RESPONSIBILITY OF THE CONTRACTOR TO VERIFY THE ACCURACY OF ALL UTILITY LOCATIONS SHOWN AND TO FURTHER DISCOVER AND AVOID ANY OTHER UTILITIES NOT SHOWN WHICH MAY BE AFFECTED BY THE IMPLEMENTATION OF THIS PLAN.
33. THE CONTRACTOR MUST PROVIDE FOR ALL TESTING AS REQUIRED BY THE STREET USE INSPECTOR.
34. BACKFILL MATERIAL USED IN PUBLIC RIGHT–OF–WAY SHALL MEET STANDARD COS SPECIFICATIONS AND MUST BE APPROVED BY SEATTLE DEPARTMENT OF TRANSPORTATION.
35. INSPECTION AND ACCEPTANCE OF ALL WORK IN THE PUBLIC RIGHT–OF–WAY MUST BE DONE BY REPRESENTATIVES OF THE CITY OF SEATTLE. IT SHALL BE THE CONTRACTOR'S RESPONSIBILITY TO COORDINATE AND SCHEDULE APPROPRIATE INSPECTIONS ALLOWING FOR PROPER ADVANCE NOTICE. THE SEATTLE DEPARTMENT OF TRANSPORTATION STREET USE INSPECTOR MAY REQUIRE REMOVAL AND RECONSTRUCTION OF ANY ITEMS PLACED IN THE RIGHT OF WAY THAT DO NOT MEET CITY STANDARDS OR THAT WERE CONSTRUCTED WITHOUT APPROPRIATE INSPECTIONS.
36. THE CONTRACTOR MUST KEEP ALL PAVED SURFACES IN THE RIGHT OF WAY CLEAN BY SWEEPING PER SECTION 8–01.3(16) AND PER DRAWING EC–1.
37. ALL WORK PERFORMED BY SEATTLE CITY LIGHT, AND OTHER UTILITIES TO REMOVE OR RELOCATE EXISTING UTILITIES MUST BE DONE AT THE CONTRACTOR'S EXPENSE.
38. WORK MUST CONFORM TO THE LATEST EDITION OF THE SEATTLE PUBLIC UTILITIES (SPU) DESIGN STANDARDS AND GUIDELINES.

GENERAL NOTES
G–4

VAULT SERIAL NO.	DATE	MARK	NATURE REVISIONS	MADE	CHK'D	REV'D
37295						

CDM Smith
14432 SE Eastgate Way
Suite 100
Bellevue, WA 98007
Tel: (425) 519-8300

REVIEWED BY SPU/WATER ENGINEERING ..... 20.....
REVIEWED BY SPU/DRAINAGE ..... 20.....
APPROVED BY SDOT STREET IMPROVEMENT PERMITTING ..... 20.....

APPROVED FOR ADVERTISING
LIZ ALZEER
DEPARTMENT OF FINANCE & ADMINISTRATIVE SERVICES
SEATTLE, WASHINGTON . . . . . 20 . . .
BY: . . . . . .
CITY PURCHASING & CONTRACTING SERVICES DIRECTOR

INITIALS AND DATE		INITIALS AND DATE	
DESIGNED	REK 12/06/2018	REVIEWED: DES.	CONST.
CHECKED	JNC 12/07/2018	SDOT	PROJ. MGR.
DRAWN	JDR 12/10/2018	RECEIVED	
CHECKED	CEB 12/10/2018	REVISED AS BUILT	

ALL WORK SHALL BE DONE IN ACCORDANCE WITH THE CITY OF SEATTLE STANDARD PLANS AND SPECIFICATIONS AND OTHER DOCUMENTS CALLED FOR IN SECTION 0–02.3 OF THE PROJECT MANUAL.

2018.12.20 18:28:04-02'00'

Seattle Public Utilities
ORDINANCE NO. 125475 PW NO. 2018–064
FUND: DWF
SCALE: NONE

PUMP STATION NO. 22 RETROFIT AND FORCE MAIN REPLACEMENT

JOB NO. PC C315071 R/W CO
VAULT PLAN NO. 776–474
SHEET 4 OF 71

C:\pw_pt\robinsonjd\d0575331\G4 261-1009_P-NOTE.dwg
Robinsonjd Dec-10-18 8:18am

PS 22 MECHANICAL & ELECTRICAL EQUIPMENT LIST

EQUIPMENT TAGS	MAXIMO ASSET NO.	RETIRED ASSET NO.	QTY	DESCRIPTIONS	MFRS*	MODEL*	COMMENTS
P-2201	1063398	536588		PUMP 1	CORNELL	8NNW CUTTER	REPLACE EXISTING ASSET
MTR-2201	1063399	536589		PUMP 1	PER SPECS	PER SPECS	REPLACE EXISTING ASSET
P-2202	1063400	536591		PUMP 2	CORNELL	8NNW CUTTER	REPLACE EXISTING ASSET
MTR-2202	1063401	536592		PUMP 2	PER SPECS	PER SPECS	REPLACE EXISTING ASSET
P-2203	1063402	988956		SUMP PUMP - DRY WELL	PER SPECS	PER SPECS	REPLACE EXISTING ASSET
GEN-2200	1063934	536634		EMERGENCY ONSITE GENERATOR	PER SPECS	PER SPECS	REPLACE EXISTING ASSET
P-2204	1063935	N/A		SUMP PUMP - BYPASS VAULT	PER SPECS	PER SPECS	NEW ASSET
AST-2200	N/A	N/A		EMERGENCY ONSITE GENERATOR	PER SPECS	PER SPECS	NOT AN ASSET
LSL-2212	1063936	N/A		LOW LEVEL SWITCH	PER SPECS	PER SPECS	NEW ASSET
SF-2210	1063405	536606		SUPPLY FAN - DRY WELL	PER SPECS	PER SPECS	REPLACE EXISTING ASSET
EF-2211	1063406	536608		EXHAUST FAN - DRY WELL	PER SPECS	PER SPECS	REPLACE EXISTING ASSET
FSL-2210	1063407	N/A		LOW FLOW SWITCH - SUPPLY - DRY WELL	PER SPECS	PER SPECS	NEW ASSET
FSL-2211	1063408	N/A		LOW FLOW SWITCH - EXHAUST - DRY WELL	PER SPECS	PER SPECS	NEW ASSET
SF-2220	1063937	N/A		SUPPLY FAN - WET WELL	PER SPECS	PER SPECS	NEW ASSET
EF-2221	1063938	N/A		EXHAUST FAN - WET WELL	PER SPECS	PER SPECS	NEW ASSET
OCU-2221	1064127	N/A		EXHAUST FAN - WET WELL	PER SPECS	PER SPECS	NEW ASSET
MCP-2200	1063911	536623		SCADA PANEL	PER SPECS	PER SPECS	REPLACE EXISTING ASSET
AE/AIT-2205	1063912	N/A		GAS MONITOR - LEL - DRY WELL	PER SPECS	PER SPECS	NEW ASSET
LSHH-2203	1063913	785498		FLOOD SWITCH - DRY WELL	PER SPECS	PER SPECS	REPLACE EXISTING ASSET
PE/PT 2202	1063939	N/A		FLOW CONTROL STRUCTURE - NPDES 60 - 010-159	PER SPECS	PER SPECS	REFERENCE ASSET #786231 UNDER NPDES60.
LE/LT-2203	1063940	N/A		FLOW CONTROL STRUCTURE - NPDES 60 - 010-159	PER SPECS	PER SPECS	REFERENCE ASSET #786231 UNDER NPDES60.
FE/FIT-2201	1063941	N/A		FLOW METER - MAGNETIC	PER SPECS	PER SPECS	NEW ASSET
LSHH-2204	1063942	N/A		FLOOD SWITCH - BYPASS VAULT	PER SPECS	PER SPECS	NEW ASSET
LSH-2201	1063943	536609		FLOAT SWITCH - HIGH - WET WELL	PER SPECS	PER SPECS	REPLACE EXISTING ASSET
LSHH-2202	1063944	988955		FLOAT SWITCH - HIGH HIGH - WET WELL	PER SPECS	PER SPECS	REPLACE EXISTING ASSET
PE/PT-2201	1063945	1029535		PRESSURE TRANSDUCER - WET WELL	PER SPECS	PER SPECS	REPLACE EXISTING ASSET
GV-2201	1063915	1022157		SUCTION VALVE - PUMP 1	PER SPECS	PER SPECS	REPLACE EXISTING ASSET
GV-2204	1063916	1022160		SUCTION VALVE - PUMP 2	PER SPECS	PER SPECS	REPLACE EXISTING ASSET
CHV-2202	1063917	1022158		CHECK VALVE - PUMP 1	PER SPECS	PER SPECS	REPLACE EXISTING ASSET
CHV-2205	1063918	536598		CHECK VALVE - PUMP 2	PER SPECS	PER SPECS	REPLACE EXISTING ASSET
GV-2203	1063919	1022159		DISCHARGE VALVE - PUMP 1	PER SPECS	PER SPECS	REPLACE EXISTING ASSET
GV-2206	1063920	536599		DISCHARGE VALVE - PUMP 2	PER SPECS	PER SPECS	REPLACE EXISTING ASSET
CHV-2207	N/A	N/A		DRY WELL SUMP PUMP CHECK VALVE	PER SPECS	PER SPECS	MAXIMO ASSET GUIDELINES CONSIDERS THIS A SPARE PART.
BV-2208	N/A	N/A		DRY WELL SUMP PUMP BALL VALVE	PER SPECS	PER SPECS	MAXIMO ASSET GUIDELINES CONSIDERS THIS A SPARE PART.
GV-2209	1063946	N/A		BYPASS ISOLATION VALVE	PER SPECS	PER SPECS	NEW ASSET
GV-2211	1063947	N/A		BYPASS CONTROL VALVE - BYPASS VAULT	PER SPECS	PER SPECS	NEW ASSET
GV-2210	1063948	1022371		FORCE MAIN VALVE	PER SPECS	PER SPECS	REPLACE EXISTING ASSET
ARV-2215	1063949	N/A		VACUUM VALVE - AIR RELEASE - BYPASS VAULT	PER SPECS	PER SPECS	NEW ASSET
GV-2214	N/A	N/A		AIR RELEASE/VACUUM GATE VALVE	PER SPECS	PER SPECS	MAXIMO ASSET GUIDELINES CONSIDERS THIS A SPARE PART.
ARV-2217	1063950	N/A		VACUUM VALVE - AIR RELEASE	PER SPECS	PER SPECS	NEW ASSET
GV-2216	N/A	N/A		AIR RELEASE/VACUUM VALVE GATE VALVE	PER SPECS	PER SPECS	MAXIMO ASSET GUIDELINES CONSIDERS THIS A SPARE PART.
CHV-2212	N/A	N/A		BYPASS VAULT SUMP PUMP CHECK VALVE	PER SPECS	PER SPECS	MAXIMO ASSET GUIDELINES CONSIDERS THIS A SPARE PART.
BV-2213	N/A	N/A		BYPASS VAULT SUMP PUMP BALL VALVE	PER SPECS	PER SPECS	MAXIMO ASSET GUIDELINES CONSIDERS THIS A SPARE PART.
BV-2218	N/A	N/A		BACKFLOW PREVENTER ISOLATION BALL VALVE	PER SPECS	PER SPECS	MAXIMO ASSET GUIDELINES CONSIDERS THIS A SPARE PART.
BFP-2219	N/A	N/A		BACKFLOW PREVENTER VALVE	PER SPECS	PER SPECS	MAXIMO ASSET GUIDELINES CONSIDERS THIS A SPARE PART.
SG-2201	1063951	536600		INFLOW VALVE - WET WELL	PER SPECS	PER SPECS	REPLACE EXISTING ASSET
BAC-2222	1064132	883003		BACKFLOW PREVENTER	PER SPECS	PER SPECS	
SG-2223	1063952	N/A		STAFF GAUGE - 16FT - WET WELL	PER SPECS	PER SPECS	STAFF GAUGE WILL NEED TO BE CLEANED AND INSPECTED REGULARLY
MCC-2200	1063922	N/A		MOTOR CONTROL CENTER	PER SPECS	PER SPECS	REPLACE EXISTING ASSET
MS-2201	1063923	536590		MOTOR CONTROL CENTER	PER SPECS	PER SPECS	REPLACING EXISTING MOTOR STARTERS
MS-2002	1063924	536593		MOTOR CONTROL CENTER	PER SPECS	PER SPECS	REPLACING EXISTING MOTOR STARTERS
PNL-2200	1063925	536623		PANELBOARD	PER SPECS	PER SPECS	REPLACE EXISTING ASSET
AHF-2200	1063926	N/A		ACTIVE HARMONIC FILTER	PER SPECS	PER SPECS	NEW ASSET
DS-2201	N/A	N/A		200A MOTOR DISCONNECT	PER SPECS	PER SPECS	MAXIMO ASSET GUIDELINES CONSIDERS THIS A SPARE PART.
DS-2202	N/A	N/A		200A MOTOR DISCONNECT	PER SPECS	PER SPECS	MAXIMO ASSET GUIDELINES CONSIDERS THIS A SPARE PART.
HS-2203	N/A	N/A		JOG SWITCH	PER SPECS	PER SPECS	MAXIMO ASSET GUIDELINES CONSIDERS THIS A SPARE PART.

PS 22 MECHANICAL & ELECTRICAL EQUIPMENT LIST

EQUIPMENT TAGS	MAXIMO ASSET NO.	RETIRED ASSET NO.	QTY	DESCRIPTIONS	MFRS*	MODEL*	COMMENTS
HS-2204	N/A	N/A		JOG SWITCH	PER SPECS	PER SPECS	MAXIMO ASSET GUIDELINES CONSIDERS THIS A SPARE PART.
MTR-2200	1063930	N/A		UTILITY METER SOCKET	PER SPECS	PER SPECS	REPLACE EXISTING ASSET
CB-2200	N/A	N/A		MAIN CIRCUIT BREAKER	PER SPECS	PER SPECS	MAXIMO ASSET GUIDELINES CONSIDERS THIS A SPARE PART.
ATS-2200	1063953	536635		AUTOMATIC TRANSFER SWITCH	PER SPECS	PER SPECS	REPLACE EXISTING ASSET
N/A	1063954	535931		LIGHTING - DRY WELL	PER SPECS	PER SPECS	REPLACE EXISTING ASSET
N/A	1063955	N/A		LIGHTING - WET WELL	PER SPECS	PER SPECS	NEW ASSET
N/A	1063956	N/A		GFCI RECEPTACLE	PER SPECS	PER SPECS	NEW ASSET
N/A	N/A	N/A		FIRE EXTINGUISHER	PER SPECS	PER SPECS	MAXIMO ASSET GUIDELINES CONSIDERS NOT AN ASSET.
N/A	1063957	N/A		LADDER	PER SPECS	PER SPECS	NEW ASSET
N/A	1063958	N/A		LADDERS & GRATING - WET WELL	PER SPECS	PER SPECS	NEW ASSET
N/A	1063959	N/A		LADDERS & GRATING - DRY WELL	PER SPECS	PER SPECS	NEW ASSET
N/A	1064128	910406		TELCO	PER SPECS	PER SPECS	
N/A	N/A	536617		RTU POWER SUPPLY	PER SPECS	PER SPECS	
N/A	N/A	536616		MODEM	PER SPECS	PER SPECS	
N/A	N/A	536624		MAIN BREAKER	PER SPECS	PER SPECS	
N/A	N/A	536633		STANDPIPE / HOSE BIB	PER SPECS	PER SPECS	
N/A	N/A	913663		SCADA RTU BATTERIES	PER SPECS	PER SPECS	
N/A	N/A	536614		PROCESSOR	PER SPECS	PER SPECS	
N/A	N/A	536626		BRANCH CIRCUITS	PER SPECS	PER SPECS	
N/A	N/A	971068		POWER MONITOR DISPLAY - PUMP #2 - WWPS022	PER SPECS	PER SPECS	
N/A	536792	N/A		WATER SERVICE TO PUMP STATION - ON PROPERTY	PER SPECS	PER SPECS	EXISTING ASSET TO KEEP
N/A	N/A	1004857		POWER MONITOR DISPLAY - PUMP #1 - WWPS022	PER SPECS	PER SPECS	
N/A	N/A	536622		DISCONNECT SWITCH - MAIN POWER	PER SPECS	PER SPECS	
N/A	N/A	536613		I/O	PER SPECS	PER SPECS	
N/A	536807	N/A		WATER SERVICE VALVE	PER SPECS	PER SPECS	EXISTING ASSET TO KEEP
N/A	N/A	920633		CITY LIGHT SERVICE	PER SPECS	PER SPECS	
N/A	N/A	536611		PLC	PER SPECS	PER SPECS	
N/A	N/A	536612		POWER SUPPLY	PER SPECS	PER SPECS	
N/A	N/A	536610		SCADA RTU	PER SPECS	PER SPECS	
N/A	N/A	1022370		EMERGENCY BYPASS VALVE - 6IN	PER SPECS	PER SPECS	
N/A	N/A	536618		HMI TOUCH SCREEN	PER SPECS	PER SPECS	
N/A	897115	N/A		FORCE MAIN - INTERIOR	PER SPECS	PER SPECS	EXISTING ASSET TO KEEP
N/A	541759	N/A		WET WELL	PER SPECS	PER SPECS	EXISTING ASSET TO KEEP
N/A	541758	N/A		DRY WELL	PER SPECS	PER SPECS	EXISTING ASSET TO KEEP

NOTES:
* DESIGN IS BASED ON MANUFACTURERS AND MODELS SHOWN. EQUIVALENT MANUFACTURERS AND MODELS MAY BE SUBMITTED FOR APPROVAL UNLESS NOTED OTHERWISE.

NOTES:
MECHANICAL AND ELECTRICAL EQUIPMENT LIST IS NOT COMPREHENSIVE AND A REFERENCE FOR SPU USE ONLY. THE CONTRACTOR IS RESPONSIBLE TO FURNISH AND INSTALL ANY EQUIPMENT SHOWN ON THE DRAWINGS, INCLUDING EQUIPMENT NOT SHOWN ON THIS LIST.

EQUIPMENT LIST
G-5

VAULT SERIAL NO.	DATE	MARK	NATURE REVISIONS	MADE	CHK'D	REV'D
37295						

C:\pw_pl\robinsonjd\d0575331\G5 261-1009_P-MISC.dwg
Robinsonjd Dec-10-18 8:19am

CDM Smith
14432 SE Eastgate Way
Suite 100
Bellevue, WA 98007
Tel: (425) 519-8300

REVIEWED BY SPU/WATER ENGINEERING ..... 20.....
REVIEWED BY SPU/DRAINAGE ..... 20.....
APPROVED BY SDOT STREET IMPROVEMENT PERMITTING ..... 20.....

APPROVED FOR ADVERTISING
LIZ ALZEER
DEPARTMENT OF FINANCE & ADMINISTRATIVE SERVICES
SEATTLE, WASHINGTON . . . . . 20 . . .
BY: . . . . . .
CITY PURCHASING & CONTRACTING SERVICES DIRECTOR

INITIALS AND DATE	INITIALS AND DATE
DESIGNED SPU 12/06/2018	REVIEWED: DES. CONST. SDOT PROJ. MGR.
CHECKED AG 12/07/2018	
DRAWN JDR 12/10/2018	RECEIVED
CHECKED CEB 12/10/2018	REVISED AS BUILT

ALL WORK SHALL BE DONE IN ACCORDANCE WITH THE CITY OF SEATTLE STANDARD PLANS AND SPECIFICATIONS AND OTHER DOCUMENTS CALLED FOR IN SECTION 0-02.3 OF THE PROJECT MANUAL.

2018.12.20
18:28:33-02'00'

Seattle Public Utilities
ORDINANCE NO. 125475 PW NO. 2018-064
FUND: DWF
SCALE: NONE

PUMP STATION NO. 22 RETROFIT AND FORCE MAIN REPLACEMENT

JOB NO. PC C315071 R/W CO
VAULT PLAN NO. 776-474
SHEET 5 OF 71

CONSTRUCTION STORMWATER AND EROSION CONTROL NOTES

UNLESS OTHERWISE NOTED:

1. THE CONSTRUCTION CONTRACTOR MUST USE ALL REASONABLE MEASURES TO MINIMIZE THE IMPACTS OF CONSTRUCTION ACTIVITY ON WATERS OF THE STATE. WATER QUALITY CONSTITUENTS OF CONCERN ARE TURBIDITY, SUSPENDED SEDIMENTS, SETTLEABLE SOLIDS, OIL AND GREASE, AND PH. REQUIRED CSEC MEASURES INCLUDE, BUT ARE NOT LIMITED TO THE FOLLOWING:

   1.1. SUBMIT A CONSTRUCTION STORMWATER ANO EROSION CONTROL PLAN (CSECP), TREE, VEGETATION AND SOIL PROTECTION PLAN (TVSPP), SPILL PLAN (SP), AND TEMPORARY DISCHARGE PLAN (TDP) IN ACCORDANCE WITH 8–01.3(2).

   1.2. THE CONCEPTUAL CSEC MEASURES SHOWN ON THIS PLAN ARE THE MINIMUM BMPS FOR ANTICIPATED SITE CONDITIONS. DURING THE CONSTRUCTION PERIOD. THESE CSEC FACILITIES MUST BE UPGRADED (E.G. ADDITIONAL CATCH BASIN FILTERS, OR ADDITIONAL STORMWATER TREATMENT MEASURES) AS NEEDED, DUE TO WEATHER OR FIELD CONDITIONS TO PREVENT SEDIMENT FROM ENTERING THE DRAINAGE SYSTEM OR OFF–SITE AREAS.

   1.3. THE CONTRACTOR MUST USE PROPER EROSION AND SEDIMENT CONTROL PRACTICES ON THE CONSTRUCTION SITE AND ANY ADJACENT CONSTRUCTION STAGING AREAS TO PREVENT EROSION IN AND DOWNHILL OF DISTURBED AREAS, AND TO PREVENT THE DISCHARGE OF UPLAND SEDIMENTS OR SEDIMENT– LADEN WATER INTO WETLANDS, WATER BODIES, STREETS AND LOCAL DRAINAGE SYSTEMS.

   1.4. THE CSEC FACILITIES ON THE APPROVED PLAN WILL BE CONSTRUCTED PRIOR TO SITE DISTURBANCE TO ENSURE THAT THE TRANSPORT OF SEDIMENT TO SURFACE WATER S, DRAINAGE SYSTEMS, AND ADJACENT PROPERTIES IS MINIMIZED.

   1.5. THE CONTRACTOR MUST USE BMPS (E.G. DIVERSION DITCHES, BERMS) AS APPLICABLE TO MINIMIZE OFF– SITE RUNOFF AND CLEAN STORMWATER FROM ENTERING THE PROJECT AREAS.

   1.6. THE CONTRACTOR MUST NOT DISCHARGE TURBID WATER GENERATED FROM CONSTRUCTION ACTIVITIES, DIRECTLY TO ANY STREAMS, STORM WATER SYSTEM INLETS, OR DRAINAGE DITCHES.

   1.7. SOIL STOCKPILES MUST BE STABILIZED FROM EROSION, PROTECTED WITH SEDIMENT TRAPPING MEASURES, AND, WHERE POSSIBLE, LOCATED AWAY FROM STORM DRAIN AREAS.

   1.8. THE CONTRACTOR MUST EMPLOY DUST CONTROL MEASURES AS NEEDED TO PREVENT SURFACE AND AIR MOVEMENT OF DUST FROM EXPOSED SOIL SURFACES.

   1.9. CATCH BASIN PROTECTION MUST BE INSTALLED IN ANY GRATED ROAD DRAINAGE STRUCTURES, EXISTING OR NEWLY INSTALLED, WHICH ARE LIKELY TO RECEIVE RUNOFF FROM THE DISTURBED AREAS DURING CONSTRUCTION. CATCH BASIN PROTECTION SHOWN ON THE CONCEPTUAL CSEC PLANS ARE APPROXIMATE LOCATIONS. THE CONTRACTOR MUST ADD CATCH BASIN PROTECTION AS NECESSARY TO ALL GRATED CATCH BASINS THAT RECEIVE STORMWATER RUNOFF WITHIN THE PROJECT AREA AND THAT MAY OR MAY NOT BE SHOWN ON THE CSEC PLANS.

   1.10. BMPS (E.G. COMPOST SOCKS) MUST BE INSTALLED TO PREVENT SEDIMENT OR SEDIMENT LADEN WATERS FROM ENTERING GRATED ROADWAY INLETS WHICH HAVE NO SUMP AND MAY BE TOO SHALLOW TO EMPLOY CATCH BASIN FILTER SOCKS. OTHER BMPS, SUCH AS STREET SWEEPING AND VACUUMING MUST ALSO BE EMPLOYED AS NEEDED TO REMOVE SEDIMENT.

   1.11. AT NO TIME MUST MORE THAN ONE FOOT OF SEDIMENT BE ALLOWED TO ACCUMULATE WITHIN A CATCH BASIN. ALL CATCH BASINS AND CONVEYANCE LINES MUST BE CLEANED PRIOR TO PAVING. THE CLEANING OPERATION MUST NOT FLUSH SEDIMENT LADEN WATER INTO THE DOWNSTREAM SYSTEM.

   1.12. PER COS STANDARD SPECIFICATION SECTION 8–01.3(2)A AND THE CITY'S STORMWATER CODE, AREAS OF EXPOSED SOIL IN EXCESS OF 4,000 SQUARE FEET THAT WILL NOT BE DISTURBED FOR TWO DAYS DURING THE PERIOD FROM OCTOBER 1 TO APRIL 30, OR SEVEN DAYS DURING THE PER IOD FROM MAY 1 TO SEPTEMBER 30, WILL BE IMMEDIATELY STABILIZED WITH APPROVED CSEC METHODS (E.G., SEEDING, MULCHING, NETTING, CLEAR PLASTIC COVERING).

   1.13. THE CONTRACTOR'S CSECL MUST REVIEW AND MODIFY THE CSEC PLANS ON AN AS NEEDED BASIS TO REFLECT THE SITE CONDITIONS AND CONSTRUCTION METHODS USED. THE CONTRACTOR'S CESCL MUST CONDUCT SITE INSPECTIONS AT LEAST ONCE EVERY CALENDAR WEEK AND WITHIN 24 HOURS OF ANY RUNOFF DISCHARGE FROM SITE. AFTER ANY 24–HOUR RUNOFF PRODUCING EVENT, THE CESCL WILL INSPECT CSEC MEASURES FOR INTEGRITY. ANY DAMAGED CSEC MEASURES WILL BE BROUGHT TO THE ATTENTION OF THE ENGINEER AND REPAIRED IMMEDIATELY.

   1.14. CONCRETE SAWCUTTING DEBRIS AND SLURRY MUST BE CONTAINED AND MANAGED USING APPROPRIATE BMPS TO PREVENT CONTAMINATION OF SITE WATER AND MEET DISCHARGE REQUIREMENTS. FRESH CONCRETE CAN ALSO ADVERSELY AFFECT SITE WATER QUALITY. PH SAMPLING AND TESTING MUST BE IN COMPLIANCE WITH APPLICABLE DISCHARGE AUTHORIZATIONS FROM KING COUNTY DURING CONCRETE POURS AND SAWCUTTING. IF PH EXCEEDS DISCHARGE LIMITS, APPROPRIATE BMPS MUST BE APPLIED.

   1.15. THE CONTRACTOR MUST SET ASIDE A SEPARATE AREA FOR THE WASH–OUT OF CONSTRUCTION EQUIPMENT AND TOOLS. PROCESS WATER MUST BE HAULED OFF SITE OR DISCHARGED TO SEWER IN COMPLIANCE WITH A KING COUNTY DISCHARGE AUTHORIZATION.

   1.16. TEMPORARY TRENCH DEWATERING MUST BE DISCHARGED TO AN APPROVED LOCATION. DISCHARGES TO THE SEWER SYSTEM MUST COMPLY WITH ALL PROVISIONS OF ANY DISCHARGE AUTHORIZATIONS FROM KING COUNTY AND SPU, AS WELL AS COS SPECIFICATIONS SECTION 2–08.3. & 8–01.3(2)D AND E.

   1.17. EXCAVATION SPOILS MAY BE EXTREMELY WET. CONTRACTOR MUST PREVENT MUD AND WATER FROM BEING TRACKED ALONG HAULING ROUTES BY LINING TRUCK BEDS OR BY OTHER MEANS AS NECESSARY.

   1.18. THE CONTRACTOR IS RESPONSIBLE FOR THE SEQUENCING AND STAGING OF ALL DEMOLITION AND CSEC ACTIVITIES AT APPROPRIATE TIMES.

2. PROTECT TREES & VEGETATION PER STANDARD SPECIFICATIONS 1–07.16(2) & 8–01.3(2)B. CONTACT SDOT URBAN FORESTRY (684–8621 OR 684–5041) FOR FIELD REVIEW OF TREE, VEGETATION, AND SOIL PROTECTION PLAN PRIOR TO CONSTRUCTION.

ELEMENT	BMPs THAT WILL BE USED
1. PREVENT EROSION AND SEDIMENT TRANSPORT FROM THE SITE	E3.10,
2. PREVENT EROSION AND SEDIMENT TRANSPORT FROM THE SITE BY VEHICLES	E3.65, E3.70
3. PROTECT STORM DRAINS	E3.25, E3.65, E3.70
4. CONTROL DEWATERING	C1.40
5. MAINTAIN BMPs	ALL BMPs WILL BE MAINTAINED AND REPAIRED AS NEEDED TO ASSURE PERFORMANCE.
6. INSPECT BMPs	ALL BMPs SHALL BE INSPECTED BY A CECSL.
7. EXECUTE CONSTRUCTION STORMWATER CONTROL PLAN	CONSTRUCTION STORM WATER CONTROL PLAN AND DWGS WILL BE RETAINED ON–SITE. ALL TEMPORARY BMPs WILL BE REMOVED WITHIN 5 BUSINESS DAYS OF SITE STABILIZATION OR AFTER THEY ARE NO LONGER NEEDED, WHICHEVER IS LONGER.
8. MINIMIZE OPEN TRENCHES	NO MORE THAN 250 FEET OF TRENCH SHALL BE OPENED AT A TIME. DEWATERING ACTIVITIES WILL INCLUDE TREATMENT PRIOR TO DISCHARGE INTO STORM DRAIN OR COMBINED SEWER.

* BMPs ARE DESCRIBED IN VOLUME 2 CONSTRUCTION STORMWATER CONTROL TECHNICAL REQUIREMENTS DIRECTOR'S RULE, 2016, OF THE STORMWATER CODE.

EROSION AND SEDIMENTATION CONTROL NOTES
EC–1

VAULT SERIAL NO.	DATE	MARK	NATURE REVISIONS	MADE	CHK'D	REV'D
37295						

CDM Smith
14432 SE Eastgate Way
Suite 100
Bellevue, WA 98007
Tel: (425) 519-8300

REVIEWED BY SPU/WATER ENGINEERING ..... 20.....
REVIEWED BY SPU/DRAINAGE ..... 20.....
APPROVED BY SDOT STREET IMPROVEMENT PERMITTING ..... 20.....

APPROVED FOR ADVERTISING
LIZ ALZEER
DEPARTMENT OF FINANCE & ADMINISTRATIVE SERVICES
SEATTLE, WASHINGTON . . . . . 20 . . .
BY: . . . . . .
CITY PURCHASING & CONTRACTING SERVICES DIRECTOR

INITIALS AND DATE		INITIALS AND DATE	
DESIGNED JKN 07/31/2018		REVIEWED: DES.	CONST.
CHECKED JNC 12/07/2018		SDOT	PROJ. MGR.
DRAWN JDR 12/10/2018		RECEIVED	
CHECKED CEB 12/10/2018		REVISED AS BUILT	

ALL WORK SHALL BE DONE IN ACCORDANCE WITH THE CITY OF SEATTLE STANDARD PLANS AND SPECIFICATIONS AND OTHER DOCUMENTS CALLED FOR IN SECTION 0–02.3 OF THE PROJECT MANUAL.

JOHN C. CHRISTIAN STATE OF WASHINGTON 40001 2018.12.20 18:35:43 -02'00'

Seattle Public Utilities
ORDINANCE NO. 125475 PW NO. 2018–064
FUND: DWF
SCALE: NONE

PUMP STATION NO. 22 RETROFIT AND FORCE MAIN REPLACEMENT

JOB NO. PC C315071 R/W CO
VAULT PLAN NO. 776–474
SHEET 6 OF 71

C:\pw_pl\robinsonjd\d0575339\EC1 261-1009_P-EROS.dwg
Robinsonjd Dec-10-18 8:21am

LEGEND

- VEG — PRESERVE EXISTING NATURAL VEGETATION, E1.30
- CATCH BASINS INSERTS
- INLET PROTECTION
- WORK AREA LIMITS

NOTES:

1. CONTRACTOR SHALL PROVIDE SEPARATE CONSTRUCTION STORMWATER MANAGEMENT PLAN FOR STAGING AREA(S).
2. SEE DWG EC–1 FOR NOTES AND ACCEPTABLE BMPS THAT MAY BE EMPLOYED FOR CONSTRUCTION STORMWATER CONTROLS.
3. TOTAL DISTURBED AREA IS 0.62 ACRES.

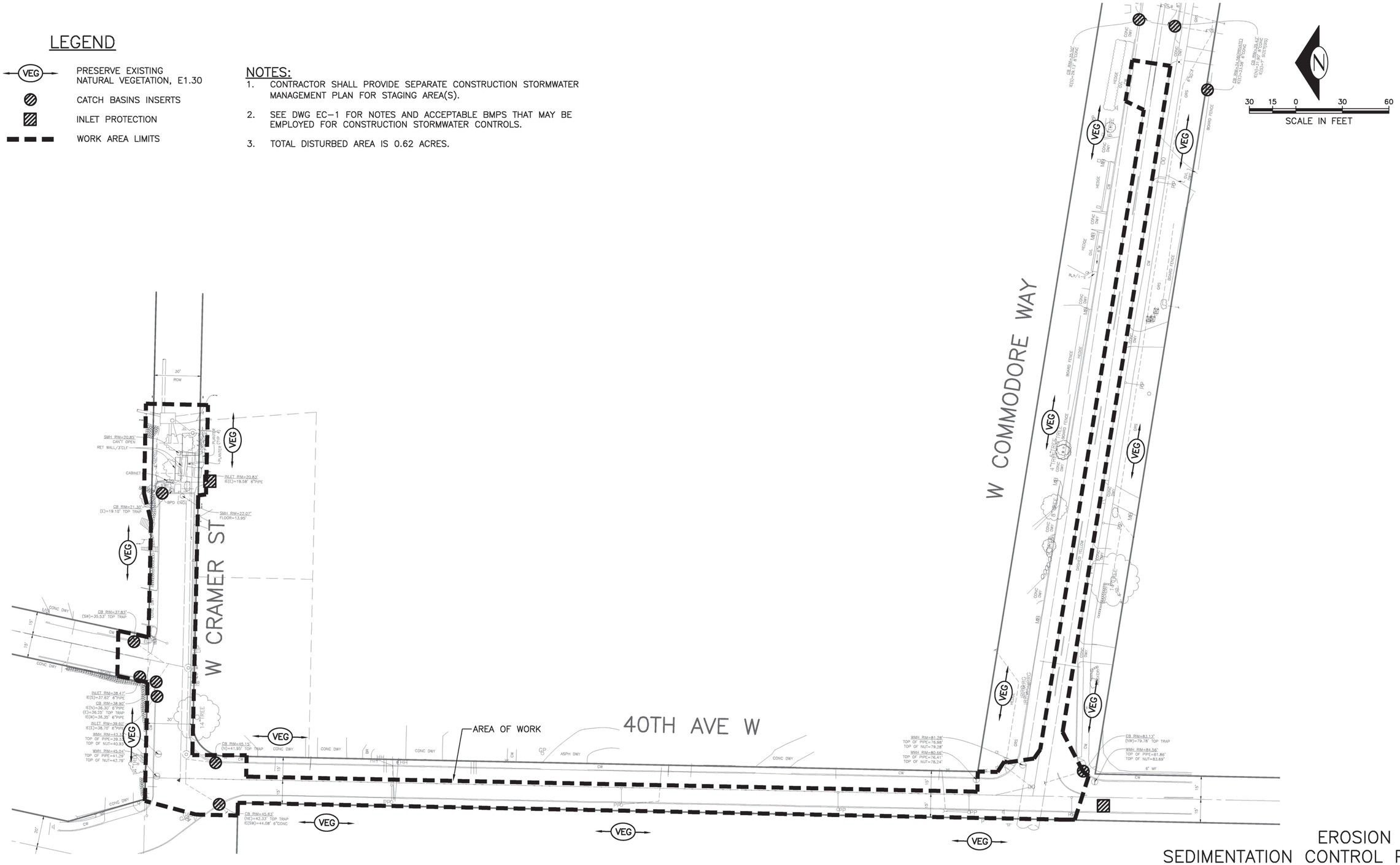

EROSION AND SEDIMENTATION CONTROL PLAN EC–2

VAULT SERIAL NO.	DATE	MARK	NATURE REVISIONS	MADE	CHK'D	REV'D
37295						

C:\pw_pl1\robinsonjd\d0575339\EC2 261-1009_P-EROS.dwg
Robinsonjd Dec-10-18 8:22am

CDM Smith
14432 SE Eastgate Way
Suite 100
Bellevue, WA 98007
Tel: (425) 519-8300

REVIEWED BY SPU/WATER ENGINEERING ..... 20....
REVIEWED BY SPU/DRAINAGE ..... 20....
APPROVED BY SDOT STREET IMPROVEMENT PERMITTING ..... 20....

APPROVED FOR ADVERTISING
LIZ ALZEER
DEPARTMENT OF FINANCE & ADMINISTRATIVE SERVICES
SEATTLE, WASHINGTON . . . . . 20 . . .
BY: . . . . . .
CITY PURCHASING & CONTRACTING SERVICES DIRECTOR

INITIALS AND DATE	
DESIGNED	JKN 07/31/2018
CHECKED	JNC 12/07/2018
DRAWN	JDR 12/10/2018
CHECKED	CEB 12/10/2018

INITIALS AND DATE	
REVIEWED:	
DES.	CONST.
SDOT	PROJ. MGR.
RECEIVED	
REVISED AS BUILT	

ALL WORK SHALL BE DONE IN ACCORDANCE WITH THE CITY OF SEATTLE STANDARD PLANS AND SPECIFICATIONS AND OTHER DOCUMENTS CALLED FOR IN SECTION 0-02.3 OF THE PROJECT MANUAL.

STATE OF WASHINGTON
JOHN N CHEPPS
45551
REGISTERED PROFESSIONAL ENGINEER
2018.12.20 18:36:06 -02'00'

Seattle Public Utilities
ORDINANCE NO. 125475 PW NO. 2018-064
FUND: DWF
SCALE: 1"=30'

PUMP STATION NO. 22 RETROFIT AND FORCE MAIN REPLACEMENT

JOB NO. PC C315071 R/W CO
VAULT PLAN NO. 776-474
SHEET 7 OF 71

Survey Control Point Table				
P–#	Northing	Easting		Description
1	246921.25	1252667.04	35.07	MIC 38562501
2	247009.80	1252120.51	82.28	MIC 38562502
3	248199.92	1252206.82	47.11	MIC 38562503
4	248197.21	1252328.60	31.41	MIC 38562504
5	247580.37	1252208.24	35.34	MIC 38562601
6	247582.07	1252132.32	44.22	MIC 38562602
8	246950.78	1252378.88	55.36	MAG 38562604
15	246915.44	1252593.33	36.40	MAG 38562603
101	246991.68	1252110.28	84.32	MAG 38562805
102	247190.61	1252133.91	69.04	MAG 38562803
103	247327.26	1252141.95	58.81	TK FD 38562804
104	247413.24	1252144.02	51.81	MAG 38562802
105	247553.66	1252215.09	37.73	MAG 38562801
106	247613.45	1252101.23	49.74	MAG 39563101
107	247579.72	1252287.66	27.76	MAG 38563401
108	247576.80	1252348.54	21.02	SPK 38563402
109	247522.97	1252352.05	17.91	SCRB 38563501

GENERAL NOTES

UNLESS OTHERWISE NOTED:

1. FIELD MEASUREMENTS FOR THIS SURVEY PERFORMED WITH A 3" TRIMBLE TOTAL STATION USING TRAVERSE METHODS THAT MEET OR EXCEED ACCURACY REQUIREMENTS CONTAINED IN WAC 332.130.090.

2. THIS SURVEY WAS CONDUCTED WITHOUT THE BENEFIT OF A CURRENT TITLE REPORT AND THEREFORE DOES NOT PURPORT TO SHOW ALL EASEMENTS OR RESTRICTIONS OF RECORD, IN ANY.

3. SURVEY INFORMATION:

   HORIZONTAL DATUM: NAD83–2011 EPOCH 2010.00 DERIVED FROM THE WSRN AND NGS CORS

   VERTICAL DATUM: NAVD88

   BASIS OF BEARING: WASHINGTON STATE PLANE COORDINATE SYSTEM, NORTH ZONE

   VERTICAL BENCHMARKS: 3841–1102, PT #105

   PROJECT FIELD BOOK: #3856 PG 25–42

   PROJECT SCALE FACTOR: 0.999972923

   CONVERGENCE ANGLE: –1°10'24.04838"

   PROJECT COMBINED GRID FACTOR: 0.999974517

   SCALE FACTOR BASIS: NORTHING: 247582.07 EASTING: 1252132.32

4. BENCHMARKS:

   3941–1102: SE COR OF 40TH AVE W & W COMMODORE WY, SET 2IN BC STAMPED CITY OF SEATTLE SURVEY 3941 1102 0.5FT WEST OF BKCW & 25FT SOUTH OF INTX OF BKCWS, ALSO 3FT SW OF ANGLE POINT OF FIVE FT BOARD FENCE.
   ELEV=87.27'

   PT #105 38562801 AT INTX W CRAMER ST AND 39TH AVE W SET MAG W/FLASHER 2.5'N OF PPLT.
   ELEV=37.73'

5. PROTECT SURVEY MONUMENTS AND PERFORM WORK IN ACCORDANCE WITH COS SPECIFICATION 1–07.16(1)A. ALL SURVEY MONUMENTS DISTURBED BY THE CONSTRUCTION TO BE REESTABLISHED THROUGH DEPARTMENT OF NATURAL RESOURCES (DNR).

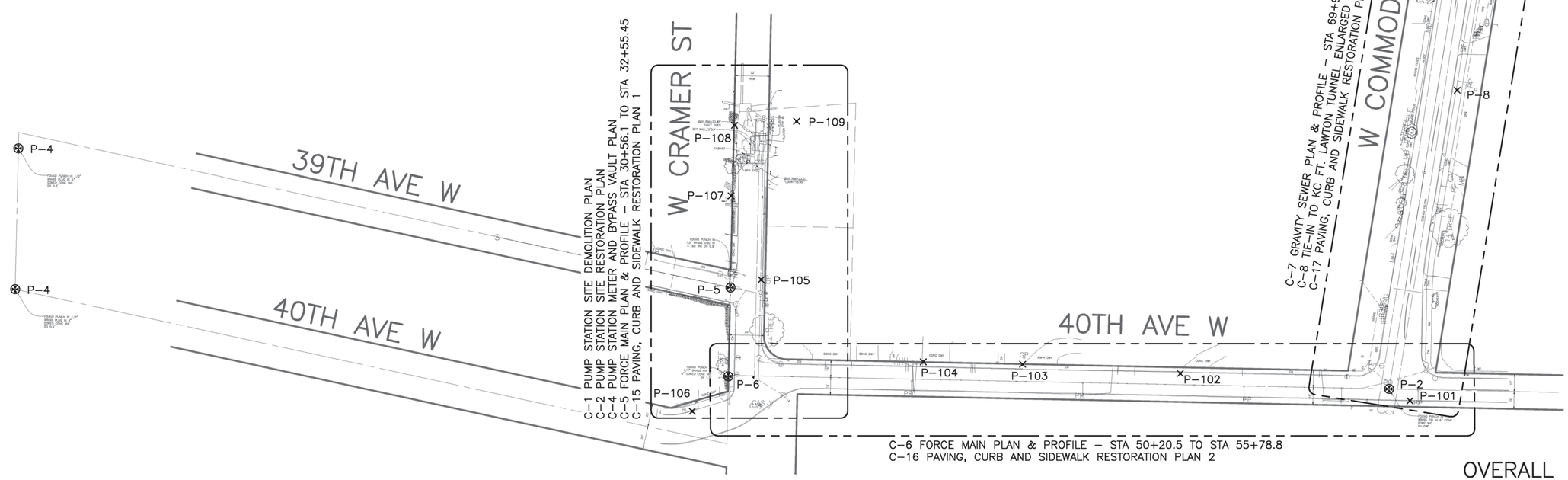

OVERALL SITE PLAN
AND SURVEY CONTROL PLAN
C–0

VAULT SERIAL NO.	DATE	MARK	NATURE REVISIONS	MADE	CHK'D	REV'D
37295						

C:\pw_pr1\robinsonjd\d0575339\C00 261–1009_P–SITE–SURV.dwg
Robinsonjd Dec–10–18 8:24am

CDM Smith
14432 SE Eastgate Way
Suite 100
Bellevue, WA 98007
Tel: (425) 519-8300

REVIEWED BY SPU/WATER ENGINEERING ..... 20.....
REVIEWED BY SPU/DRAINAGE ..... 20.....
APPROVED BY SDOT STREET IMPROVEMENT PERMITTING ..... 20.....

APPROVED FOR ADVERTISING
LIZ ALZEER
DEPARTMENT OF FINANCE & ADMINISTRATIVE SERVICES
SEATTLE, WASHINGTON . . . . . 20 . . .
BY: . . . . . .
CITY PURCHASING & CONTRACTING SERVICES DIRECTOR

INITIALS AND DATE		INITIALS AND DATE	
DESIGNED	REK 12/06/2018	REVIEWED:	
CHECKED	JNC 12/07/2018	DES.	CONST.
		SDOT	PROJ. MGR.
DRAWN	JDR 12/10/2018	RECEIVED	
CHECKED	CEB 12/10/2018	REVISED AS BUILT	

ALL WORK SHALL BE DONE IN ACCORDANCE WITH THE CITY OF SEATTLE STANDARD PLANS AND SPECIFICATIONS AND OTHER DOCUMENTS CALLED FOR IN SECTION 0–02.3 OF THE PROJECT MANUAL.

2018.12.20 18:29:28-02'00'

Seattle Public Utilities
ORDINANCE NO. 125475 PW NO. 2018–064
FUND: DWF
SCALE: 1"=50'

PUMP STATION NO. 22 RETROFIT AND FORCE MAIN REPLACEMENT

JOB NO. PC C315071 R/W CO
VAULT PLAN NO. 776–474
SHEET 8 OF 71

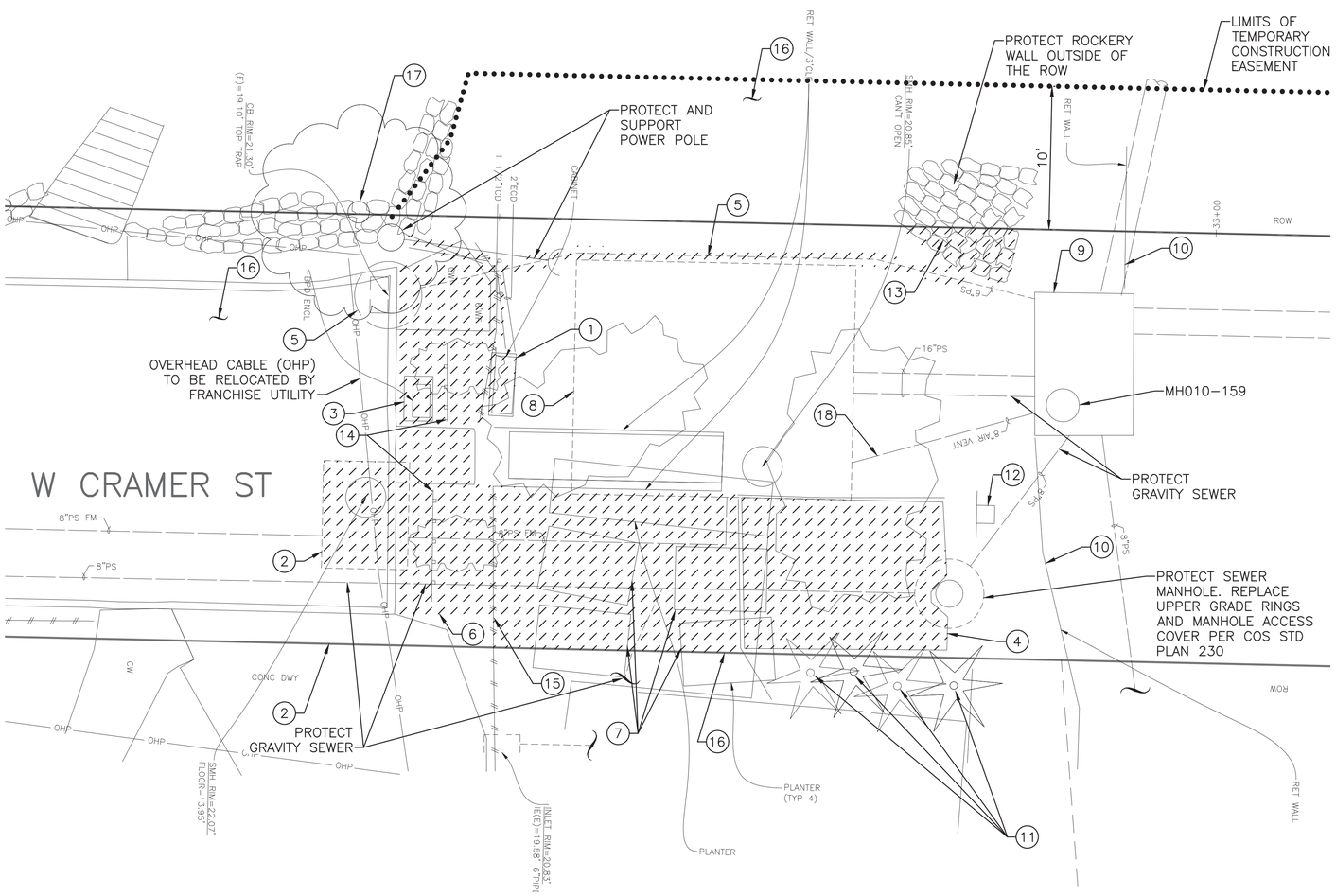

SITE DEMOLITION PLAN

GENERAL NOTES:

UNLESS OTHERWISE NOTED:

1. CLEAR AND GRUB SOFTSCAPE AREAS WITHIN THE RIGHT-OF-WAY UP TO BEHIND THE CURB LINE.
2. CONTRACTOR TO VERIFY WITH OWNER PRIOR TO DEMOLITION IF ANY EQUIPMENT OR MATERIALS ARE TO BE SALVAGED.
3. CONTRACTOR MUST CLEARLY MARK PROPERTY BOUNDARIES PRIOR TO ANY DEMOLITION ACTIVITIES.
4. REMOVAL OF PLANTINGS AND LANDSCAPING OUTSIDE OF THE RIGHT-OF-WAY REQUIRES PRIVATE PROPERTY OWNER APPROVAL.
5. THE CONTRACTOR SHALL NOT WORK IN THE PRIVATE PROPERTY UNTIL SPU PROVIDES THE TEMPORARY EASEMENT AGREEMENT FOR CONSTRUCTION WORK OUTSIDE OF THE RIGHT-OF-WAY.
6. WORK NOT IN THE ROW TO BE COORDINATED BETWEEN SPU AND THE PROPERTY OWNER.

KEY NOTES:

(1) REMOVE ABOVE-GRADE CSO LEVEL MONITORING CABINET AND CONCRETE EQUIPMENT PAD. CSO MONITORING MUST REMAIN CONTINUOUS THROUGHOUT CONSTRUCTION. CONTRACTOR TO SCHEDULE CSO LEVEL MONITORING CABINET REMOVAL TO OCCUR AFTER THE NEW CSO LEVEL MONITORING IS INSTALLED AND FUNCTIONAL. COORDINATE WITH SPU TO HAVE ADS REPLACE THEIR MONITORING EQUIPMENT WITH BATTERY POWERED MONITORING IN MH010-159 PRIOR TO THE REMOVAL OF THE EXISTING MONITORING CABINET.

(2) REMOVE ALL PIPING, VALVES AND APPURTENANCES LOCATED WITHIN THE BYPASS CONNECTION VAULT. REMOVE VAULT LID, MANHOLE COVER AND RISERS AND STRUCTURE TO A MINIMUM OF 5-FT BELOW FINISHED GRADE. REMOVE 8-INCH DIAMETER YARD PIPING CONNECTING THE PUMP STATION DISCHARGE TO THE BYPASS CONNECTION VAULT. PERMANENTLY PLUG THE 8-INCH DIAMETER CAST IRON FORCE MAIN DOWNSTREAM OF THE BYPASS CONNECTION VAULT WITH A MINIMUM 12-INCH LONG PLUG OF 3,000 PSI CONCRETE. FILL VAULT WITH STRUCTURAL BACKFILL (TYPE 17 MINERAL AGGREGATE) AND REPAIR CURB, SIDEWALK, AND STREET SURFACING PER THE 2017 SDOT ROWORR REQUIREMENTS. CONTRACTOR SHALL USE THE EXISTING FORCE MAIN AND BYPASS CONNECTION VAULT THROUGHOUT CONSTRUCTION UNTIL THE NEW FORCE MAIN AND KING COUNTY INTERCEPTOR CONNECTION ARE INSTALLED AND IN OPERATION. CONTRACTOR TO SCHEDULE THE BYPASS CONNECTION VAULT DEMOLITION ACCORDINGLY.

(3) REMOVE BACKFLOW PREVENTER (BFP) AND ENCLOSURE. TEMPORARILY CAP THE 1-INCH DIAMETER WATER CONNECTION PIPE TO BE RECONNECTED TO NEW BPD DEVICE AND ENCLOSURE.

(4) REMOVE FUEL STORAGE TANK, FUELING PIPING, GENERATOR CONCRETE EQUIPMENT PAD, WOODEN FENCING AND WOODEN TRELLIS. EXISTING STANDBY GENERATOR TO BE USED DURING PUMP STATION SERVICE UPGRADE. CONTRACTOR TO SCHEDULE THE GENERATOR REMOVAL AND ASSOCIATED DEMOLITION ACCORDINGLY. CONTRACTOR TO REMOVE AND SALVAGE STANDBY GENERATOR.

(5) REMOVE AND REPLACE CATCH BASIN. REPLACE 6" PS BETWEEN CATCH BASIN TO 5' FROM MH010-159 TO RE-ROUTE AROUND NEW DRY WELL EXHAUST VENT AND RETAINING WALL.

(6) REMOVE SIDEWALK, CURB, GUTTER, FENCING, TREES AND SHRUBS.

(7) REMOVE PLANTERS. SEE GENERAL NOTE NO. 4.

(8) PRESERVE AND PROTECT PUMP STATION STRUCTURE AND STAIRS.

(9) PRESERVE AND PROTECT CSO CONTROL STRUCTURE.

(10) PRESERVE AND PROTECT SHORELINE RETAINING WALL.

(11) TRIM TREES AT PROPERTY LINE.

(12) REMOVE AND RELOCATE SIGN TO LOCATION SHOWN ON C-2.

(13) REMOVE ROCKERY WALL WITHIN THE RIGHT-OF-WAY. THE CONTRACTOR WILL NOTIFY PRIVATE RESIDENCE TWO WEEKS IN ADVANCE OF ROCK WALL REMOVAL.

(14) REMOVE EXISTING GUARD RAIL.

(15) REMOVE WOODEN FENCE UP TO THE EDGE OF THE RIGHT-OF-WAY.

(16) PROVIDE TEMPORARY EXCAVATION SUPPORT (SHORING) TO MAINTAIN CONTRACTOR'S WORK WITHIN THE TEMPORARY CONSTRUCTION EASEMENT.

(17) PROTECT TREE AND ROCKERY WALL WITHIN THE RIGHT-OF-WAY.

(18) PROTECT 8" AIR VENT PIPE; IF DAMAGED REPLACE IN KIND. LOCATE PRIOR TO START OF WORK AND NOTIFY ENGINEER OF ANY CONFLICTS.

PUMP STATION
SITE DEMOLITION PLAN
C-1

VAULT SERIAL NO.	DATE	MARK	NATURE REVISIONS	MADE	CHK'D	REV'D
37295						

C:\pw_pl1\robinsonjd\d0575339\C01 261-1009_P-SITE-DEMO.dwg
RobinsonJd Apr-22-19 7:22am

CDM Smith
14432 SE Eastgate Way
Suite 100
Bellevue, WA 98007
Tel: (425) 519-8300

REVIEWED BY SPU/WATER ENGINEERING ..... 20.....
REVIEWED BY SPU/DRAINAGE ..... 20.....
APPROVED BY SDOT STREET IMPROVEMENT PERMITTING ..... 20.....

APPROVED FOR ADVERTISING
LIZ ALZEER
DEPARTMENT OF FINANCE & ADMINISTRATIVE SERVICES
SEATTLE, WASHINGTON . . . . . 20 . . .
BY: . . . . . .
CITY PURCHASING & CONTRACTING SERVICES DIRECTOR

INITIALS AND DATE		INITIALS AND DATE	
DESIGNED JNC	12/06/2018	REVIEWED:	
CHECKED AG	12/07/2018	DES:	CONST.
		SDOT	PROJ. MGR.
DRAWN JDR	12/10/2018	RECEIVED	
CHECKED CEB	12/10/2018	REVISED AS BUILT	

ALL WORK SHALL BE DONE IN ACCORDANCE WITH THE CITY OF SEATTLE STANDARD PLANS AND SPECIFICATIONS AND OTHER DOCUMENTS CALLED FOR IN SECTION 0-02.3 OF THE PROJECT MANUAL.

JOHN N CRIPPEN
STATE OF WASHINGTON
41561
REGISTERED PROFESSIONAL ENGINEER
2019.04.22 15:16:14 -03'00'

Seattle Public Utilities
ORDINANCE NO. 125475 PW NO. 2018-064
FUND: DWF
SCALE: 1"=5'

PUMP STATION NO. 22 RETROFIT AND FORCE MAIN REPLACEMENT

JOB NO. PC C315071 R/W CO
VAULT PLAN NO. 776-474
SHEET 9 OF 71

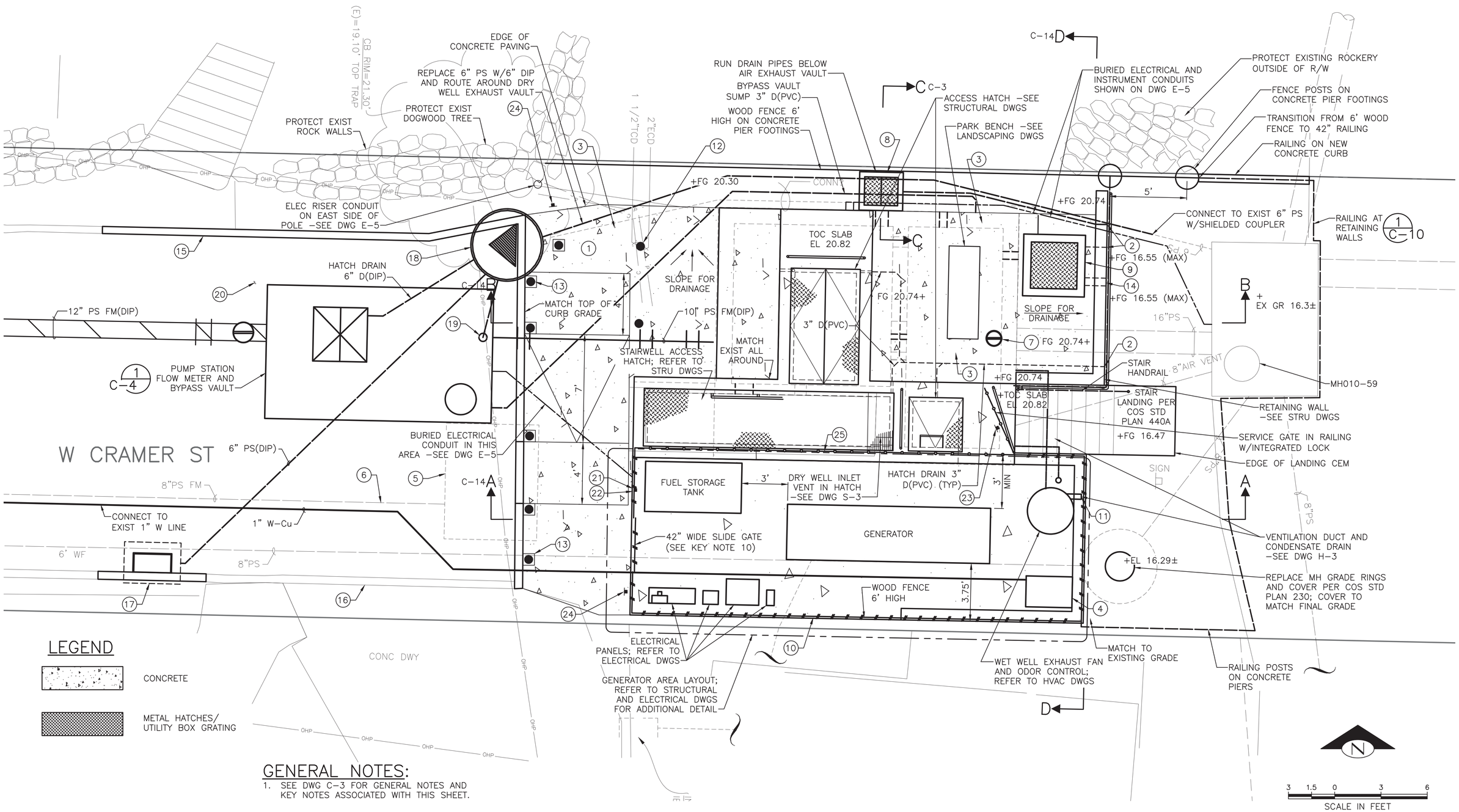

GENERAL NOTES:

1. SEE DWG C-3 FOR GENERAL NOTES AND KEY NOTES ASSOCIATED WITH THIS SHEET.

SITE RESTORATION PLAN

PUMP STATION
SITE RESTORATION PLAN
C-2

MARK	DATE	NATURE REVISIONS	MADE	CHK'D	REV'D

VAULT SERIAL NO. 37295

C:\pw_pl1\robinsonjd\d0575339\C02 261-1009_P-SITE.dwg
Robinsonjd Apr-22-19 12:11pm

CDM Smith
14432 SE Eastgate Way
Suite 100
Bellevue, WA 98007
Tel: (425) 519-8300

REVIEWED BY SPU/WATER ENGINEERING ..... 20.....
REVIEWED BY SPU/DRAINAGE ..... 20.....
APPROVED BY SDOT STREET IMPROVEMENT PERMITTING ..... 20.....

APPROVED FOR ADVERTISING
LIZ ALZEER
DEPARTMENT OF FINANCE & ADMINISTRATIVE SERVICES
SEATTLE, WASHINGTON . . . . . 20 . . .
BY: . . . . . .
CITY PURCHASING & CONTRACTING SERVICES DIRECTOR

INITIALS AND DATE		INITIALS AND DATE	
DESIGNED JNC 12/06/2018		REVIEWED:	
CHECKED AG 12/07/2018		DES.	CONST.
		SDOT	PROJ. MGR.
DRAWN JDR 12/10/2018		RECEIVED	
CHECKED CEB 12/10/2018		REVISED AS BUILT	

ALL WORK SHALL BE DONE IN ACCORDANCE WITH THE CITY OF SEATTLE STANDARD PLANS AND SPECIFICATIONS AND OTHER DOCUMENTS CALLED FOR IN SECTION 0-02.3 OF THE PROJECT MANUAL.

JOHN N CRIPPEN STATE OF WASHINGTON 41561 REGISTERED PROFESSIONAL ENGINEER
2019.04.22 15:36:34-03'00'

Seattle Public Utilities
ORDINANCE NO. 125475 PW NO. 2018-064
FUND: DWF
SCALE: 1"=3'

PUMP STATION NO. 22 RETROFIT AND FORCE MAIN REPLACEMENT

JOB NO. PC C315071 R/W CO
VAULT PLAN NO. 776-474
SHEET 10 OF 71

GENERAL NOTES:

UNLESS OTHERWISE NOTED:

1. WORK NOT IN THE ROW TO BE COORDINATED WITH THE RESIDENT THROUGH THE SPU INSPECTOR.
2. OVERHEAD CABLE (OHP) WITHIN ROW AT PUMP STATION SITE TO BE RELOCATED BY FRANCHISE UTILITY.
3. FUEL TANK SUPPLY AND RETURN SEE DWG E–13.
4. ALL HATCHES TO HAVE NON–SKID COATING.
5. BURIED ELECTRICAL AND INSTRUMENT CONDUITS SHOWN ON DWG E–5.
6. SEE LANDSCAPE DRAWINGS FOR NEW PLANTINGS AND DECORATIVE DETAILS.
7. PERFORM SURVEY PRIOR TO START OF WORK TO VERIFY ELEVATIONS.
8. CONTRACTOR TO COORDINATE WITH HOMEOWNER TO PROVIDE ACCESS TO RESIDENTIAL DRIVEWAY OR ADA INSTALLATION A MINIMUM OF 72–HOURS IN ADVANCE OF PERFORMING WORK.

KEY NOTES:

1. SEE LANDSCAPING DRAWINGS FOR FINISHED SITE HARD SCAPE SURFACES AND PLANTINGS. PROVIDE SLOPE AND GRADE HARD SCAPE SURFACES FOR STORM WATER DRAINAGE.
2. 4" FLAP VALVE CONNECTED TO 3" DRAIN PIPE THROUGH RETAINING WALL RETAINING AND DISCHARGING ABOVE GRADE DISCHARGE. SEE DETAIL 4 ON DWG C–10.
3. 6" CEMENT CONCRETE PAVEMENT PER COS STD PLAN NO. 401. SEE LANDSCAPING DRAWINGS FOR PAVEMENT TEXTURE.
4. BACKFLOW PREVENTER (BFP) WITH ENCLOSURE. SEE DETAIL 3/C–11.
5. ABANDONED–IN–PLACE BYPASS VAULT. VAULT MUST NOT BE DECOMMISSIONED UNTIL THE NEW FORCE MAIN AND KC FORT LAWTON TUNNEL CONNECTION ARE COMPLETED AND OPERATIONAL.
6. PLUG AND ABANDON–IN–PLACE 8–INCH DIAMETER FORCE MAIN. FORCE MAIN MUST NOT BE DECOMMISSIONED UNTIL THE NEW FORCE MAIN AND KC FORT LAWTON TUNNEL CONNECTION ARE COMPLETED AND OPERATIONAL.
7. INSTALL VALVE BOX COVER PER COS STD PLAN 315 WITH OPERATING NUT FOR WET WELL ISOLATION SLIDE GATE. REFER TO MECHANICAL DRAWINGS FOR ADDITIONAL REQUIREMENTS.
8. DRY WELL EXHAUST VAULT; REFER TO HVAC DRAWINGS FOR ADDITIONAL DETAILS. PROVIDE VAULT DRAIN THROUGH RETAINING WALL.
9. WET WELL INTAKE FAN VAULT; REFER TO HVAC DRAWINGS FOR ADDITIONAL DETAILS.
10. WOOD FENCE. SEE DWG C–20.
11. WET WELL AND ODOR CONTROL SYSTEM EXHAUST VENT THROUGH GENERATOR PAD RETAINING WALL; REFER TO HVAC DRAWINGS FOR ADDITIONAL DETAILS.
12. TWO FIXED BOLLARDS PER COS STD PLAN 463 (TYPE A) WITH 4'–0" OFFSET FROM THE EDGE OF THE PUMP STATION BELOW GRADE STRUCTURE. FIELD ADJUST POSITION TO AVOID BURIED UTILITIES.
13. REMOVABLE BOLLARDS PER COS STD PLAN 463 (TYPE A). FIELD ADJUST POSITION TO AVOID BURIED UTILITIES.
14. WET WELL SUPPLY AIR INLET THROUGH RETAINING WALL WITH ALL MOUNTED VENT COVER. REFER TO HVAC DRAWINGS FOR ADDITIONAL DETAILS. SEE DETAIL ON DWG H–6.
15. REPLACE ROAD CURB AND PAVEMENT. SEE PAVING, CURB AND SIDEWALK RESTORATION PLANS.
16. PROTECT RESIDENT DRIVEWAY.
17. INLET COS STD PLAN TYPE 250A MOD WITH 6" OUTLET PIPE.
18. CB COS STD PLAN TYPE 240C. RIM MATCH EXISTING, OUTLET (E) MATCH EXISTING, INLET (SW) IE=18.80, INLET (W) IE=19.10.
19. AIR/VACUUM VALVE VENT DRAIN PIPE 3" D(PVC). FIELD ROUTE TO CB NORTHEAST OF THE FLOW METER BYPASS VAULT. CB INLET IE=21.0. SLOPE PIPE TOWARDS CB TO THE EXTENT POSSIBLE.
20. PROVIDE TEMPORARY EXCAVATION SUPPORT FOR BYPASS VAULT INSTALLATION AS REQUIRED TO PERFORM THE WORK AND PROTECT PROPERTY, INCLUDING THE EXISTING ROCKERY WALL ON THE NORTH SIDE.
21. STREET END – SIGN MOUNTED ON THE WOOD FENCE PER COS STD SPEC 8–21(1)A AND ALUMINUM SHEET PER 9–28.1(3).
22. NO BEACH ACCESS – SIGN MOUNTED ON THE WOOD FENCE PER COS SPEC 8–21(1)A AND ALUMINUM SHEET PER 9–28.1(3), PROVIDE SIGN SUBMITTAL FOR APPROVAL.
23. NO BEACH ACCESS – SIGN MOUNTED ON THE GATE FENCE PER COS SPEC 8–21(1)A AND ALUMINUM SHEET PER 9–28.1(3), PROVIDE SIGN SUBMITTAL FOR APPROVAL.
24. PRIVATE PROPERTY – SIGN MOUNTED ON POST PER COS STD 8–21(1)A AND ALUMINUM SHEET PER 9–28.1(3), PROVIDE SIGN SUBMITTAL FOR APPROVAL.
25. 6' HIGH METAL VERTICAL RAIL ESTATE FENCE ON NORTH SIDE OF THE GENERATOR PAD. SEE DWG C–20.

FLOW METER AND BYPASS VAULT EXCAVATION SUPPORT NOTES:

1. FOR FLOW METER AND BY–PASS VAULT CONDUCT SOIL BORING AND SOIL ANALYSIS PRIOR TO DESIGNING THE TEMPORARY EXCAVATION SUPPORT SYSTEM. SUBMIT PROPOSED BORING LOCATION FOR ENGINEER REVIEW.
2. TEMPORARY EXCAVATION SUPPORT SYSTEM BY THE CONTRACTOR. SUBMIT DESIGN FOR ENGINEER REVIEW IN ACCORDANCE WITH PROJECT SPECIFICATIONS.
3. CONTRACTOR IS RESPONSIBLE FOR REPAIR OF DAMAGE TO THE ADJACENT INSTALLATIONS SUCH AS ROCK WALLS AT NO ADDITIONAL EXPENSE TO COS.

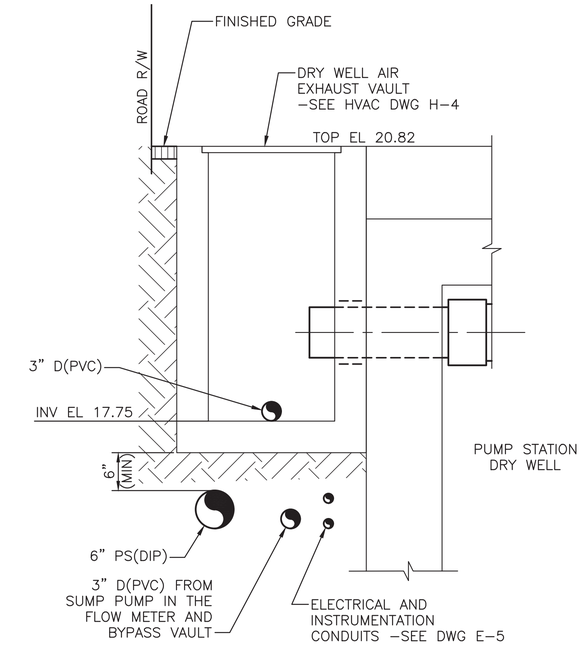

SECTION C–C C–2
1"=1'–0"

1 ½ 0 1 2
SCALE IN FEET

PUMP STATION
SITE RESTORATION PLAN NOTES
C–3

VAULT SERIAL NO.	DATE	MARK	NATURE REVISIONS	MADE	CHK'D	REV'D
37295						

C:\pw_pl\robinsonjd\d0575339\C03 261–1009_P–SITE–NOTES.dwg
RobinsonJd Apr–22–19 7:36am

CDM Smith
14432 SE Eastgate Way
Suite 100
Bellevue, WA 98007
Tel: (425) 519-8300

REVIEWED BY SPU/WATER ENGINEERING ..... 20.....
REVIEWED BY SPU/DRAINAGE ..... 20.....
APPROVED BY SDOT STREET IMPROVEMENT PERMITTING ..... 20.....

APPROVED FOR ADVERTISING
LIZ ALZEER
DEPARTMENT OF FINANCE & ADMINISTRATIVE SERVICES
SEATTLE, WASHINGTON . . . . . 20 . . .
BY: . . . . . .
CITY PURCHASING & CONTRACTING SERVICES DIRECTOR

INITIALS AND DATE		
DESIGNED	JNC	12/06/2018
CHECKED	AG	12/07/2018
DRAWN	JDR	12/10/2018
CHECKED	CEB	12/10/2018

INITIALS AND DATE	
REVIEWED:	
DES.	CONST.
SDOT	PROJ. MGR.
RECEIVED	
REVISED AS BUILT	

ALL WORK SHALL BE DONE IN ACCORDANCE WITH THE CITY OF SEATTLE STANDARD PLANS AND SPECIFICATIONS AND OTHER DOCUMENTS CALLED FOR IN SECTION 0–02.3 OF THE PROJECT MANUAL.

JOHN N CRIPPEN
STATE OF WASHINGTON
41561
REGISTERED PROFESSIONAL ENGINEER
2019-04-22 2:00:00 PM

Seattle Public Utilities
ORDINANCE NO. 125475 PW NO. 2018–064
FUND: DWF
SCALE: NONE

PUMP STATION NO. 22 RETROFIT AND FORCE MAIN REPLACEMENT

JOB NO. PC C315071 R/W CO
VAULT PLAN NO. 776–474
SHEET 11 OF 71

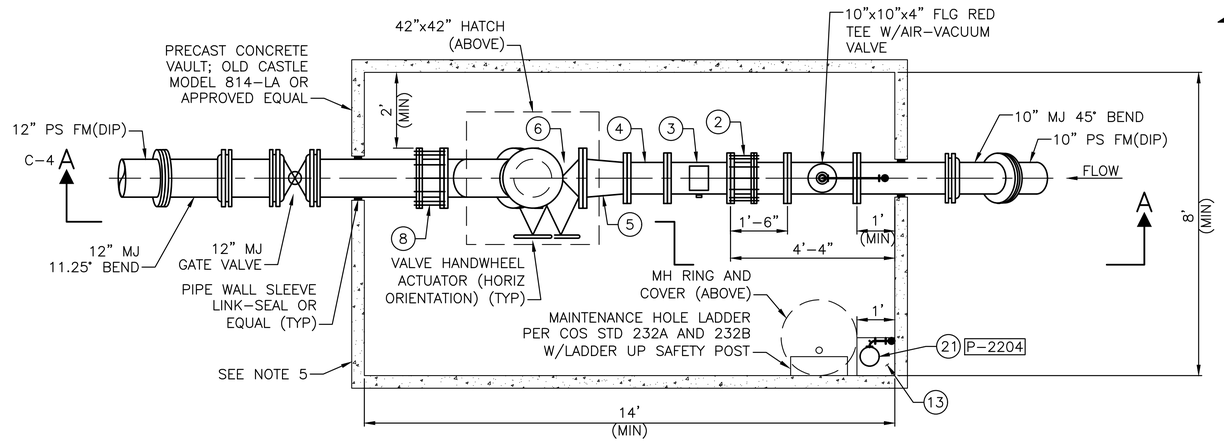

PLAN

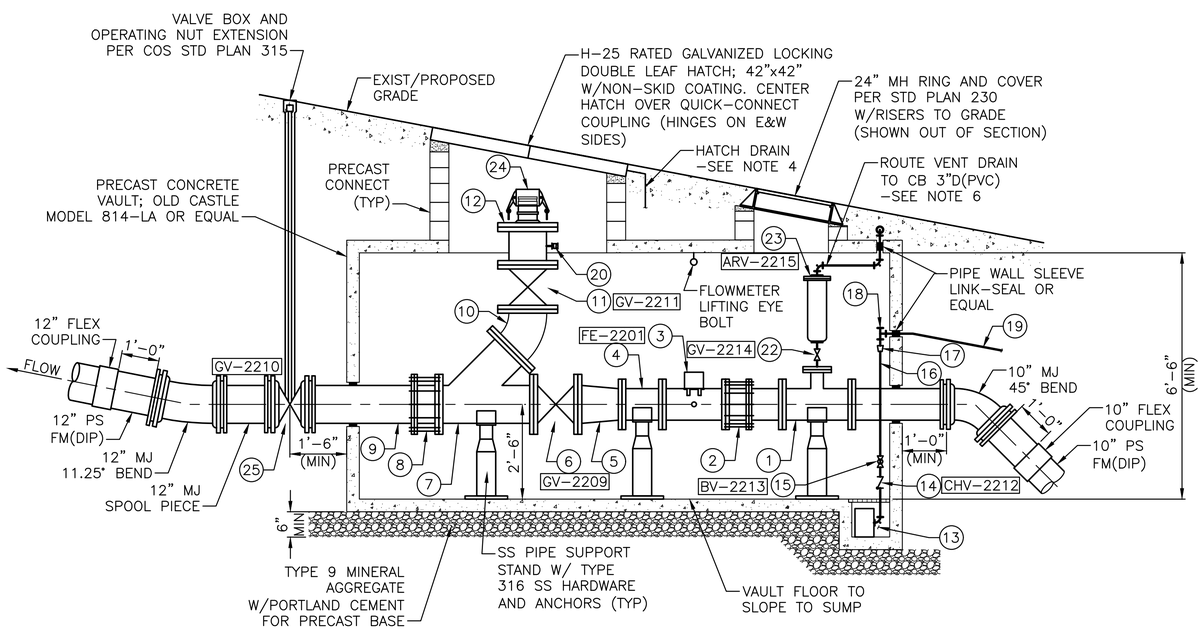

SECTION A-A C-4

2 1 0 2 4

SCALE IN FEET

PUMP STATION FLOW METER AND BYPASS VAULT

DETAIL 1/C-2

1/2"=1'-0"

NOTES:

1. REFER TO ELECTRICAL DRAWINGS FOR FLOW METER POWER AND SIGNAL CONDUIT AND WIRING.
2. ALL PIPE FITTINGS ARE TO BE RESTRAINED.
3. PROVIDE FLANGED SPOOL PIECE THE EXACT SIZE OF THE FLOW METER FOR INSTALLING WHEN THE FLOW METER IS TAKEN OUT FOR MAINTENANCE (LIST ITEM NO. 4).
4. HATCH DRAIN, PROVIDE PLASTIC FLEXIBLE COUPLINGS (FERNCO OR EQUAL) CONNECTION AND PVC SPACER PIPE TO TRANSITION TO 6" DIP DRAIN PIPE. PROVIDE CONNECTION DETAIL WITH VAULT SHOP DRAWING SUBMITTAL.
5. PREFABRICATED VAULT ASSEMBLY (WITH PRE-INSTALLED EQUIPMENT) WHERE PIPE, FITTINGS, AND ACCESSORIES ARE FITTED INTO THE PRECAST CONCRETE VAULT IN A FABRICATION SHOP PRIOR TO DELIVERING TO THE SITE. SEE PRECAST CONCRETE VAULT SPECIFICATION.
6. VENTING AIR VACUUM VALVE INSIDE THE VAULT IS NOT PERMITTED.
7. SEE FLOW METER AND BYPASS VAULT EXCAVATION SUPPORT NOTES ON DRAWING C-3.

BYPASS VAULT KEY NOTES

ITEM NUMBER	DESCRIPTION	ASSET NO.
1	10"X10"X4" REDUCING TEE (DI, FLXFL)	N/A
2	10" FLANGED COUPLING ADAPTER	N/A
3	10" FLOW METER	1063941
4	10" SPOOL PIECE FOR FLOW METER REPLACEMENT	N/A
5	12"X10" FLANGED CONCENTRIC REDUCER	N/A
6	12" GATE VALVE	1063946
7	12"X12"X12" FLANGED WYE	N/A
8	12" FLANGED COUPLING ADAPTER (RESTRAINED)	N/A
9	12" SPOOL PIECE	N/A
10	12" FLANGED 45° BEND	N/A
11	PROVIDE GATE VALVE W/CHAIN FOR HANDWHEEL ACTUATOR	1063947
12	12" DI THREADED COMPANION FLANGE W/6" NPT THREAD	N/A
13	12"X12"X12" (MIN SUMP) W/FRP GRATING (NOT SHOWN)	N/A
14	1½" CHECK VALVE	N/A
15	1½" BALL VALVE	N/A
16	1½" SCH 80 PVC PIPE	N/A
17	3"X1½" PVC REDUCER	N/A
18	3" TEE W/CAP ON ONE BRANCH	N/A
19	3" SCH 80 PVC PIPE TO WET WELL	N/A
20	1" CORP STOP	N/A
21	1½ HP SUMP PUMP	1063935
22	2" GATE VALVE	N/A
23	2" AIR VACUUM VALVE	1063949
24	6" SS CAM AND GROOVE MALE ADAPTER W/SS DUST CAP BY CAMLOCK	N/A
25	12" GATE VALVE - BURIED W/VALVE BOX	1063948
SEE DWG G-5 EQUIPMENT LIST		

PUMP STATION FLOW METER AND BYPASS VAULT DETAIL C-4

NATURE REVISIONS	MADE	CHK'D	REV'D

VAULT SERIAL NO. 37295 | DATE | MARK

C:\pw_p11\robinsonjd\d0575339\C04 261-1009_P-SSWR-STRU.dwg
Robinsonjd Apr-12-19 7:32am

CDM Smith
14432 SE Eastgate Way
Suite 100
Bellevue, WA 98007
Tel: (425) 519-8300

REVIEWED BY SPU/WATER ENGINEERING ..... 20.....
REVIEWED BY SPU/DRAINAGE ..... 20.....
APPROVED BY SDOT STREET IMPROVEMENT PERMITTING ..... 20.....

APPROVED FOR ADVERTISING
LIZ ALZEER
DEPARTMENT OF FINANCE & ADMINISTRATIVE SERVICES
SEATTLE, WASHINGTON . . . . . 20 . . .
BY: . . . . . .
CITY PURCHASING & CONTRACTING SERVICES DIRECTOR

INITIALS AND DATE		INITIALS AND DATE	
DESIGNED REK 12/06/2018		REVIEWED:	
CHECKED JNC 12/07/2018		DES.	CONST.
		SDOT	PROJ. MGR.
DRAWN JDR 12/10/2018		RECEIVED	
CHECKED CEB 12/10/2018		REVISED AS BUILT	

ALL WORK SHALL BE DONE IN ACCORDANCE WITH THE CITY OF SEATTLE STANDARD PLANS AND SPECIFICATIONS AND OTHER DOCUMENTS CALLED FOR IN SECTION 0-02.3 OF THE PROJECT MANUAL.

JOHN N CRIPPEN
STATE OF WASHINGTON
2019-05-22
16:22:39-07'00'
41561
REGISTERED PROFESSIONAL ENGINEER

Seattle Public Utilities
ORDINANCE NO. 125475 PW NO. 2018-064
FUND: DWF
SCALE: AS NOTED

PUMP STATION NO. 22 RETROFIT AND FORCE MAIN REPLACEMENT

JOB NO. PC C315071 R/W CO
VAULT PLAN NO. 776-474
SHEET 12 OF 71

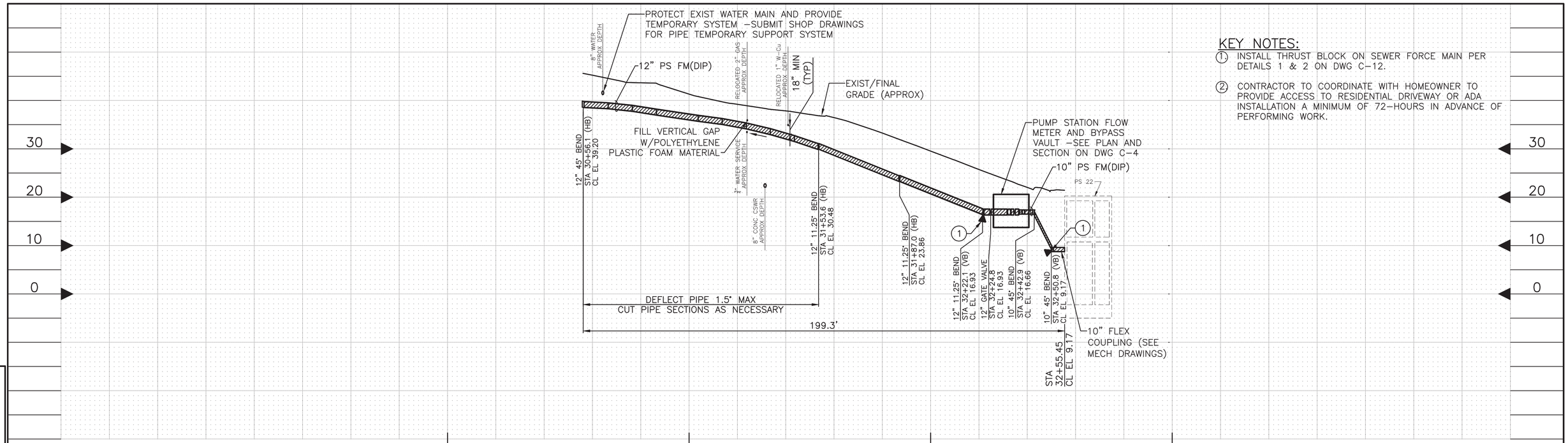

KEY NOTES:

1. INSTALL THRUST BLOCK ON SEWER FORCE MAIN PER DETAILS 1 & 2 ON DWG C–12.
2. CONTRACTOR TO COORDINATE WITH HOMEOWNER TO PROVIDE ACCESS TO RESIDENTIAL DRIVEWAY OR ADA INSTALLATION A MINIMUM OF 72–HOURS IN ADVANCE OF PERFORMING WORK.

PROFILE

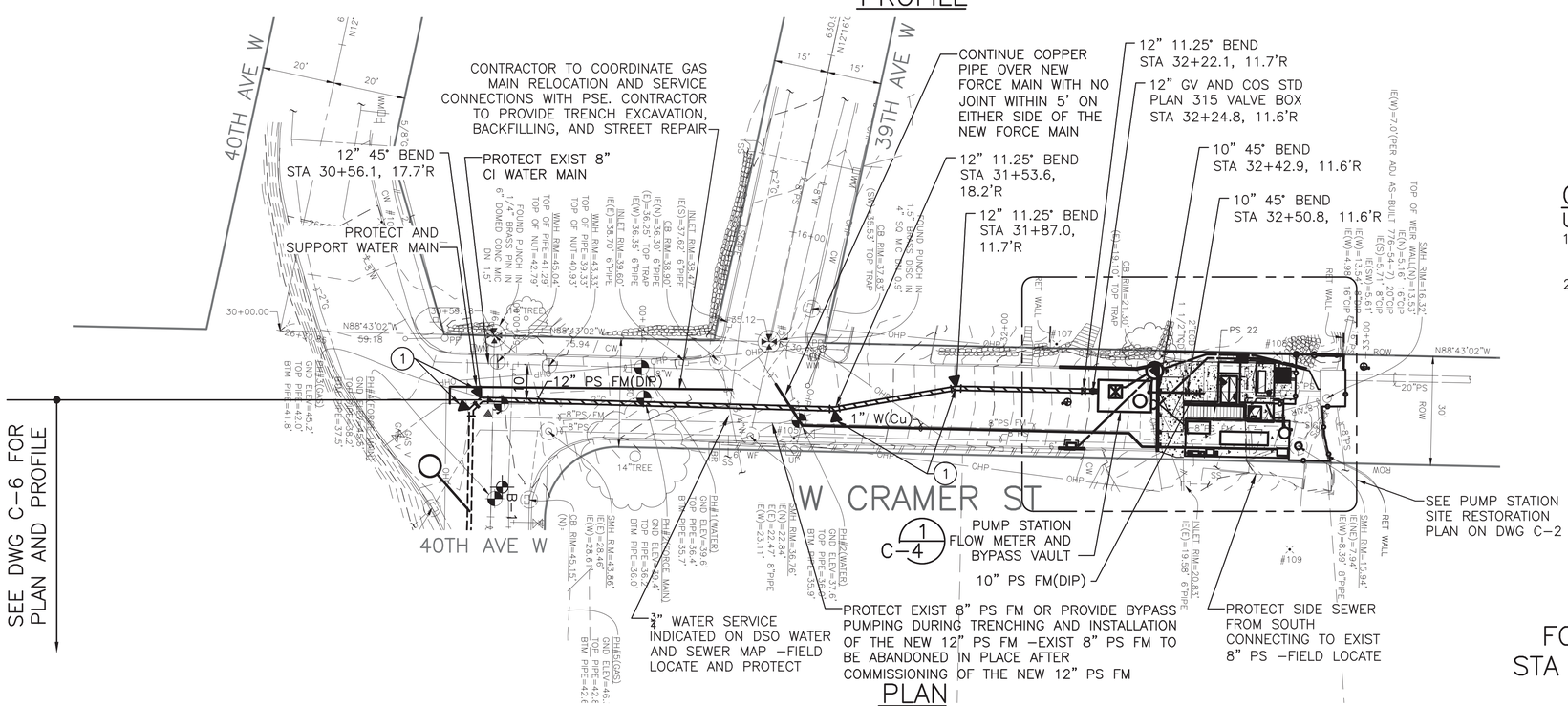

PLAN

20 10 0 20 40
SCALE IN FEET

GENERAL NOTES:

UNLESS OTHERWISE NOTED:

1. PROTECT ALL CROSSING UTILITIES AND PROVIDE SHORING AND SUPPORT AS REQUIRED.
2. REMOVE AND REPLACE SEWER PIPE CROSSING THE PIPE TRENCH AS INDICATED ON THE DRAWINGS AND AS REQUIRED.

FORCE MAIN PLAN & PROFILE STA 30+56.1 TO STA 32+55.45 C–5

VAULT SERIAL NO.	DATE	MARK	NATURE REVISIONS	MADE	CHK'D	REV'D
37295						

CDM Smith
14432 SE Eastgate Way
Suite 100
Bellevue, WA 98007
Tel: (425) 519-8300

C:\pw_pl\robinsonjd\d0575339\C05 261-1009_P-SSWR.dwg
Robinsonjd Dec-19-18 3:27pm

REVIEWED BY SPU/WATER ENGINEERING ..... 20....
REVIEWED BY SPU/DRAINAGE ..... 20....
APPROVED BY SDOT STREET IMPROVEMENT PERMITTING ..... 20....

APPROVED FOR ADVERTISING
LIZ ALZEER
DEPARTMENT OF FINANCE & ADMINISTRATIVE SERVICES
SEATTLE, WASHINGTON . . . . . 20 . . .
BY: . . . . . .
CITY PURCHASING & CONTRACTING SERVICES DIRECTOR

INITIALS AND DATE		INITIALS AND DATE	
DESIGNED REK 12/06/2018		REVIEWED: DES.	CONST.
CHECKED JNC 12/07/2018		SDOT	PROJ. MGR.
DRAWN JDR 12/10/2018		RECEIVED	
CHECKED CEB 12/10/2018		REVISED AS BUILT	

ALL WORK SHALL BE DONE IN ACCORDANCE WITH THE CITY OF SEATTLE STANDARD PLANS AND SPECIFICATIONS AND OTHER DOCUMENTS CALLED FOR IN SECTION 0–02.3 OF THE PROJECT MANUAL.

2018.12.20 18:31:18.02'00'

Seattle Public Utilities
ORDINANCE NO. 125475 PW NO. 2018–064
FUND: DWF
SCALE: H. 1"=20', V. 1"=10'

PUMP STATION NO. 22 RETROFIT AND FORCE MAIN REPLACEMENT

JOB NO. PC C315071 R/W CO
VAULT PLAN NO. 776–474
SHEET 13 OF 71

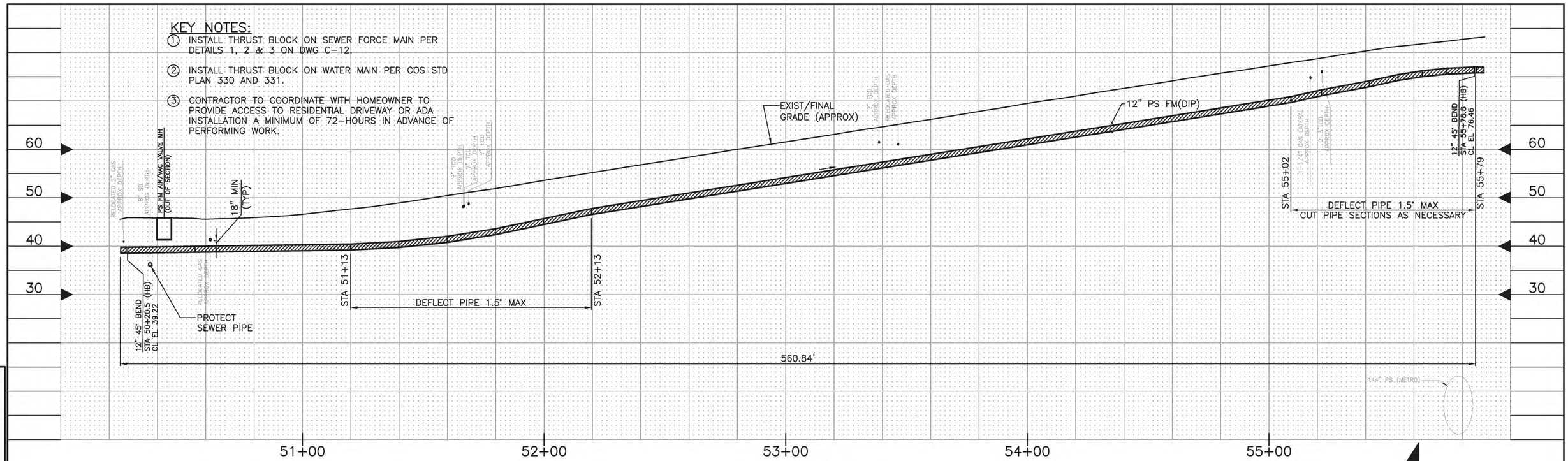

PROFILE

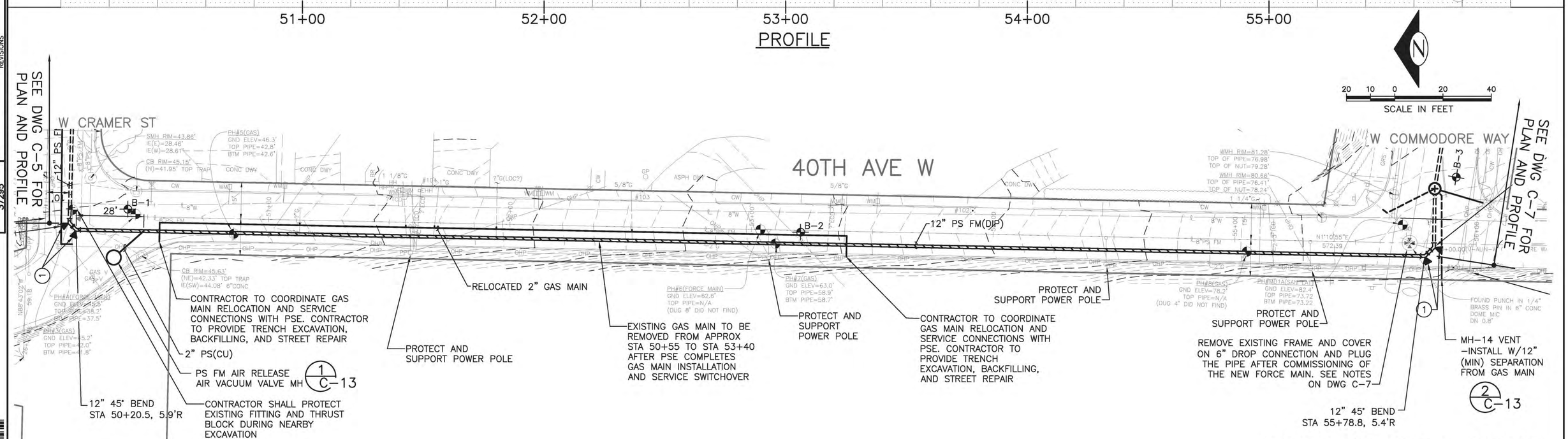

PLAN

FORCE MAIN PLAN & PROFILE
STA 50+20.5 TO STA 55+78.8
C-6

MARK	DATE	NATURE REVISIONS	MADE	CHK'D	REV'D

VAULT SERIAL NO. 37295

CDM Smith
14432 SE Eastgate Way
Suite 100
Bellevue, WA 98007
Tel: (425) 519-8300

REVIEWED BY SPU/WATER ENGINEERING ..... 20....
REVIEWED BY SPU/DRAINAGE ..... 20....
APPROVED BY SDOT STREET IMPROVEMENT PERMITTING ..... 20....

APPROVED FOR ADVERTISING
LIZ ALZEER
DEPARTMENT OF FINANCE & ADMINISTRATIVE SERVICES
SEATTLE, WASHINGTON . . . . . 20 . . .
BY: . . . . . .
CITY PURCHASING & CONTRACTING SERVICES DIRECTOR

INITIALS AND DATE	
DESIGNED REK 12/06/2018	
CHECKED JNC 12/07/2018	
DRAWN JDR 12/10/2018	
CHECKED CEB 12/10/2018	

INITIALS AND DATE	
REVIEWED:	
DES.	CONST.
SDOT	PROJ. MGR.
RECEIVED	
REVISED AS BUILT	

ALL WORK SHALL BE DONE IN ACCORDANCE WITH THE CITY OF SEATTLE STANDARD PLANS AND SPECIFICATIONS AND OTHER DOCUMENTS CALLED FOR IN SECTION 0-02.3 OF THE PROJECT MANUAL.

2018.12.20 18:31:40 -02'00'

Seattle Public Utilities

ORDINANCE NO. 125475 PW NO. 2018-064
FUND: DWF
SCALE: H. 1"=20', V. 1"=10'

PUMP STATION NO. 22 RETROFIT AND FORCE MAIN REPLACEMENT

JOB NO. PC C315071 R/W CO

VAULT PLAN NO. 776-474

SHEET 14 OF 71

C:\pw_pf\robinsonjd\d0575339\C06 261-1009_P-SSWR.dwg
Robinsonjd Dec-19-18 3:33pm

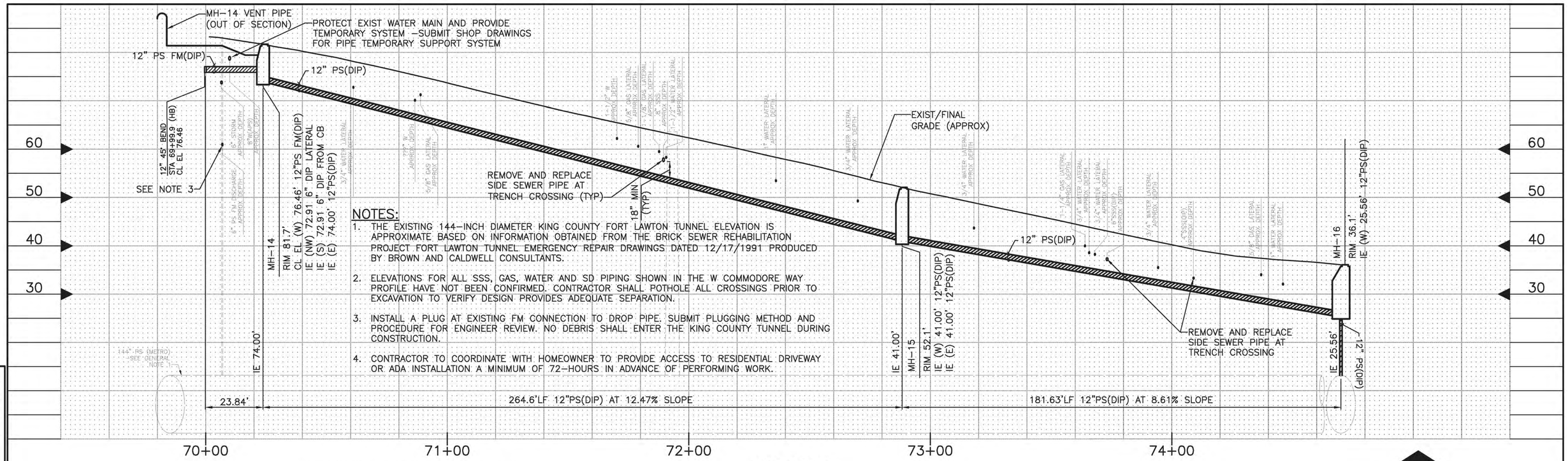

NOTES:

1. THE EXISTING 144–INCH DIAMETER KING COUNTY FORT LAWTON TUNNEL ELEVATION IS APPROXIMATE BASED ON INFORMATION OBTAINED FROM THE BRICK SEWER REHABILITATION PROJECT FORT LAWTON TUNNEL EMERGENCY REPAIR DRAWINGS DATED 12/17/1991 PRODUCED BY BROWN AND CALDWELL CONSULTANTS.
2. ELEVATIONS FOR ALL SSS, GAS, WATER AND SD PIPING SHOWN IN THE W COMMODORE WAY PROFILE HAVE NOT BEEN CONFIRMED. CONTRACTOR SHALL POTHOLE ALL CROSSINGS PRIOR TO EXCAVATION TO VERIFY DESIGN PROVIDES ADEQUATE SEPARATION.
3. INSTALL A PLUG AT EXISTING FM CONNECTION TO DROP PIPE. SUBMIT PLUGGING METHOD AND PROCEDURE FOR ENGINEER REVIEW. NO DEBRIS SHALL ENTER THE KING COUNTY TUNNEL DURING CONSTRUCTION.
4. CONTRACTOR TO COORDINATE WITH HOMEOWNER TO PROVIDE ACCESS TO RESIDENTIAL DRIVEWAY OR ADA INSTALLATION A MINIMUM OF 72–HOURS IN ADVANCE OF PERFORMING WORK.

PROFILE

N

20 10 0 20 40
SCALE IN FEET

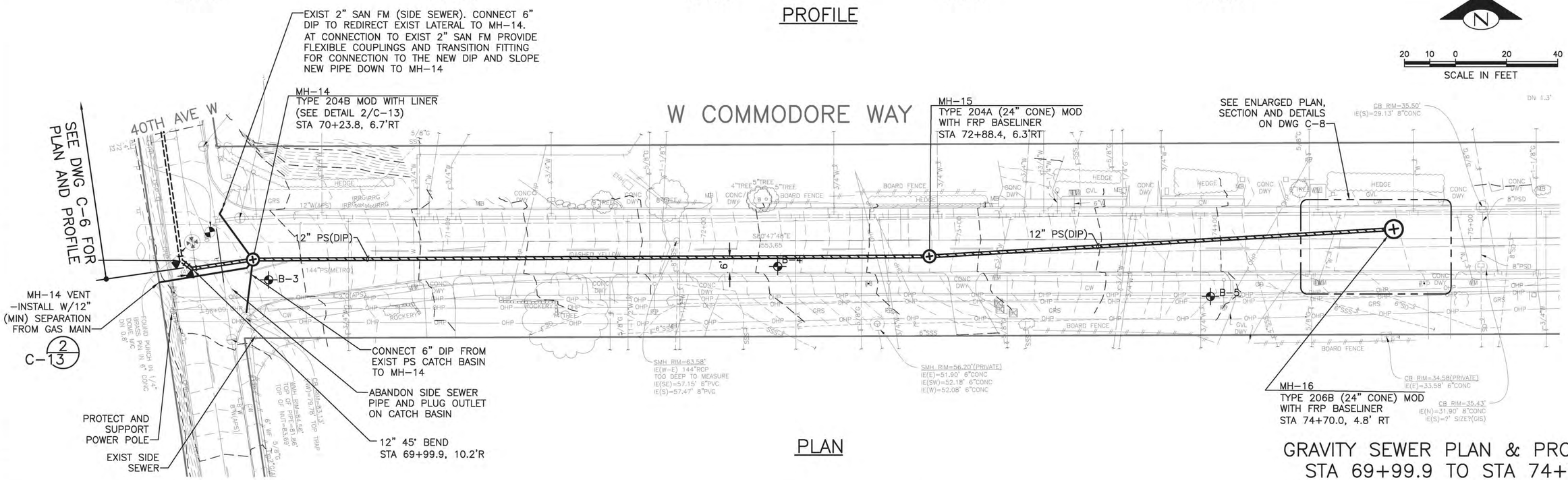

PLAN

GRAVITY SEWER PLAN & PROFILE
STA 69+99.9 TO STA 74+70.0
C-7

MARK	DATE	NATURE REVISIONS	MADE	CHK'D	REV'D

VAULT SERIAL NO. 37295

C:\pw_pl1\robinsonjd\d0575339\C07 281-1009_P-SSWR.dwg
Robinsonjd Dec-19-18 3:47pm

CDM Smith
14432 SE Eastgate Way
Suite 100
Bellevue, WA 98007
Tel: (425) 519-8300

REVIEWED BY SPU/WATER ENGINEERING	APPROVED FOR ADVERTISING LIZ ALZEER DEPARTMENT OF FINANCE & ADMINISTRATIVE SERVICES	INITIALS AND DATE	INITIALS AND DATE
..... 20....	SEATTLE, WASHINGTON . . . . . 20 . . .	DESIGNED REK 12/06/2018	REVIEWED: DES. CONST. SDOT PROJ. MGR.
REVIEWED BY SPU/DRAINAGE		CHECKED JNC 12/07/2018	RECEIVED
..... 20....		DRAWN JDR 12/10/2018	REVISED AS BUILT
APPROVED BY SDOT STREET IMPROVEMENT PERMITTING	BY:	CHECKED CEB 12/10/2018	ALL WORK SHALL BE DONE IN ACCORDANCE WITH THE CITY OF SEATTLE STANDARD PLANS AND SPECIFICATIONS AND OTHER DOCUMENTS CALLED FOR IN SECTION 0-02.3 OF THE PROJECT MANUAL.
..... 20....	CITY PURCHASING & CONTRACTING SERVICES DIRECTOR		

2018.12.20 18:32:00+02'00'

Seattle Public Utilities

ORDINANCE NO. 125475 PW NO. 2018-064
FUND: DWF
SCALE: H. 1"=20', V. 1"=10'

PUMP STATION NO. 22 RETROFIT AND FORCE MAIN REPLACEMENT

JOB NO. PC C315071
R/W
CO
VAULT PLAN NO. 776-474
SHEET 15 OF 71

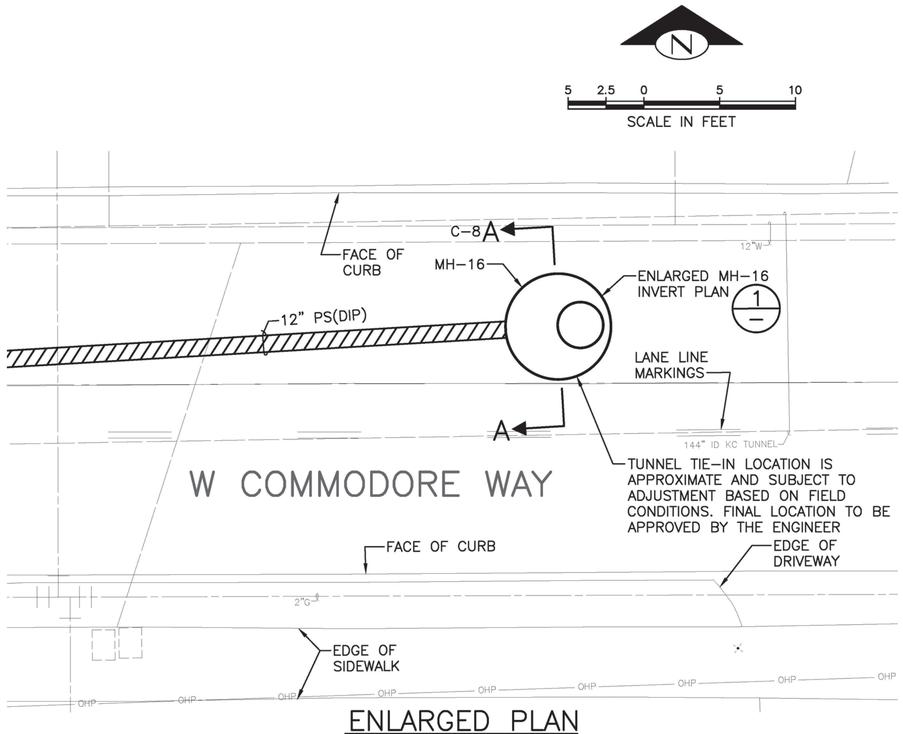

ENLARGED PLAN
1"=5'

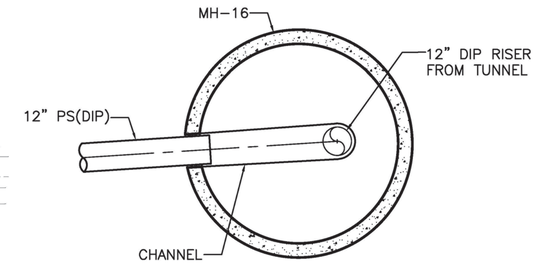

ENLARGED MH-16 INVERT PLAN
DETAIL 1
3/8"=1'-0"

2 1 0 2 4
SCALE IN FEET

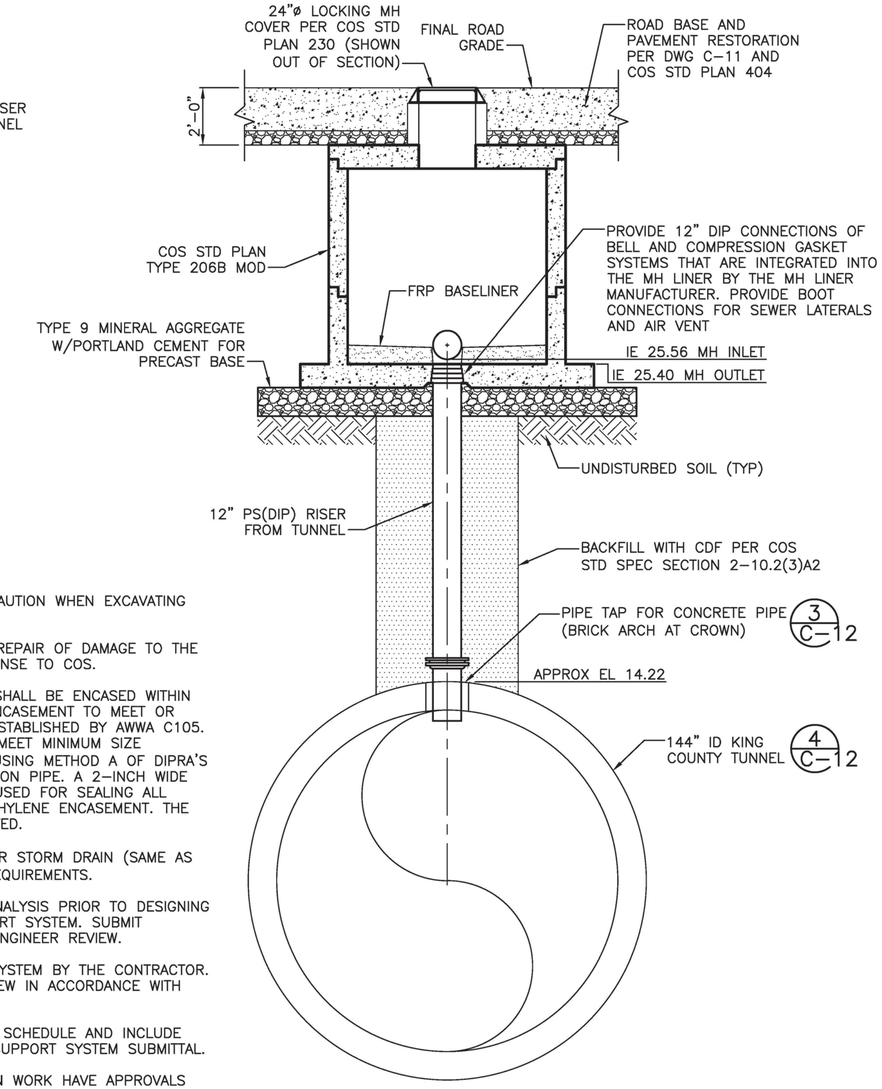

SECTION A-A C-8
3/8"=1'-0"

2 1 0 2 4
SCALE IN FEET

NOTES:

1. CONTRACTOR MUST USE EXTREME CAUTION WHEN EXCAVATING AND BACKFILLING TUNNEL.
2. CONTRACTOR IS RESPONSIBLE FOR REPAIR OF DAMAGE TO THE KC TUNNEL AT NO ADDITIONAL EXPENSE TO COS.
3. DIP TO BE EMBEDDED WITHIN CDF SHALL BE ENCASED WITHIN 8-MIL THICKNESS POLYETHYLENE ENCASEMENT TO MEET OR EXCEED THE MINIMUM STANDARDS ESTABLISHED BY AWWA C105. POLYETHYLENE ENCASEMENT SHALL MEET MINIMUM SIZE REQUIREMENTS AND BE INSTALLED USING METHOD A OF DIPRA'S INSTALLATION GUIDE FOR DUCTILE IRON PIPE. A 2-INCH WIDE PLASTIC ADHESIVE TAPE SHALL BE USED FOR SEALING ALL SEAMS, CUTS, OR TEARS IN POLYETHYLENE ENCASEMENT. THE USE OF DUCT TAPE IS NOT PERMITTED.
4. SEE DETAILS ON DRAWING C-11 FOR STORM DRAIN (SAME AS SEWER) AND GAS MAIN BACKFILL REQUIREMENTS.
5. CONDUCT SOIL BORING AND SOIL ANALYSIS PRIOR TO DESIGNING THE TEMPORARY EXCAVATION SUPPORT SYSTEM. SUBMIT PROPOSED BORING LOCATION FOR ENGINEER REVIEW.
6. TEMPORARY EXCAVATION SUPPORT SYSTEM BY THE CONTRACTOR. SUBMIT DESIGN FOR ENGINEER REVIEW IN ACCORDANCE WITH PROJECT SPECIFICATIONS.
7. PROVIDE DETAILED WORK PLAN AND SCHEDULE AND INCLUDE WITH THE TEMPORARY EXCAVATION SUPPORT SYSTEM SUBMITTAL.
8. PRIOR TO THE START OF THE TIE-IN WORK HAVE APPROVALS ON ALL RELATED SUBMITTAL AND ALL MATERIALS AND EQUIPMENT REQUIRED FOR THE WORKS TO BE ON SITE OR STAGED NEARBY.
9. CONTRACTOR TO COORDINATE WITH HOMEOWNER TO PROVIDE ACCESS TO RESIDENTIAL DRIVEWAY OR ADA INSTALLATION A MINIMUM OF 72-HOURS IN ADVANCE OF PERFORMING WORK.

KING COUNTY WASTEWATER TREATMENT DIVISION SEWER NOTES

UNLESS OTHERWISE NOTED:

1. NOTIFY MARK LAMPARD AT KING COUNTY (206-477-5414, MARK.LAMPARD@KINGCOUNTY.GOV) A MINIMUM OF FIVE (5) WORKING DAYS IN ADVANCE OF THE PRE-CONSTRUCTION CONFERENCE.
2. CONTRACTOR MUST NOTIFY MARK LAMPARD AT KING COUNTY (206-477-5414, MARK.LAMPARD@KINGCOUNTY.GOV) A MINIMUM OF THREE (3) WORKING DAYS IN ADVANCE OF ANY CONSTRUCTION ACTIVITY WITHIN 50-FEET OF THE KING COUNTY FORT LAWTON TUNNEL (NORTH INTERCEPTOR).
3. THE CONTRACTOR MUST TAKE MEASURES TO PROTECT THE FORT LAWTON TUNNEL (NORTH INTERCEPTOR) DURING SHORING ACTIVITY.
4. KING COUNTY SHALL REVIEW THE SHORING PLANS.
5. KING COUNTY FORT LAWTON TUNNEL (NORTH INTERCEPTOR) CONNECTION MUST BE MADE BY CORE DRILLING USING AN INSERTA-TEE CONNECTION INSTALLED PER MANUFACTURES INSTRUCTIONS. WORK BY THE CONTRACTOR.
6. RECORD DRAWINGS INDICATE THAT THE CONNECTION WILL BE MADE TO A BRICK ARCH SECTION OF THE 144" DIAMETER NORTH INTERCEPTOR. THE CORE DRILLED CONNECTION THROUGH THE BRICK MAY NEED TO BE MORTARED SMOOTH WITH NON-SHRINK GROUT PRIOR TO INSTALLING THE INSERTA-TEE.
7. A KING COUNTY REPRESENTATIVE MUST BE PRESENT AT ALL TIMES ON-SITE DURING EXCAVATION, CORING, AND INSTALLATION OF THE CONNECTION TO THE KING COUNTY FORT LAWTON TUNNEL (NORTH INTERCEPTOR).
8. NO DEBRIS SHALL BE PERMITTED TO ENTER THE KING COUNTY SEWER SYSTEM DURING CONSTRUCTION OF/OR CONNECTION TO THE KING COUNTY FORT LAWTON TUNNEL (NORTH INTERCEPTOR).
9. NO WORK ON OR CONNECTING TO THE KING COUNTY FORT LAWTON TUNNEL (NORTH INTERCEPTOR) MUST NOT BE BACKFILLED UNTIL THE WORK HAS BEEN INSPECTED AND APPROVED BY A KING COUNTY REPRESENTATIVE.
10. THE CONNECTION TO THE KING COUNTY FORT LAWTON TUNNEL (NORTH INTERCEPTOR) MUST NOT BE PUT INTO SERVICE UNTIL THE TRIBUTARY SYSTEM HAS BEEN CLEANED, INSPECTED, TESTED, AND APPROVED BY THE CITY OF SEATTLE.

TIE-IN TO KC FT. LAWTON TUNNEL
ENLARGED PLAN AND SECTION
C-8

VAULT SERIAL NO. 37295	MARK	DATE	NATURE REVISIONS	MADE	CHK'D	REV'D

C:\pw_pl1\robinsonjd\d0575339\C08 261-1009_P-SSWR.dwg
Robinsonjd Dec-19-18 4:19pm

CDM Smith
14432 SE Eastgate Way
Suite 100
Bellevue, WA 98007
Tel: (425) 519-8300

REVIEWED BY SPU/WATER ENGINEERING ..... 20.....
REVIEWED BY SPU/DRAINAGE ..... 20.....
APPROVED BY SDOT STREET IMPROVEMENT PERMITTING ..... 20.....

APPROVED FOR ADVERTISING
LIZ ALZEER
DEPARTMENT OF FINANCE & ADMINISTRATIVE SERVICES
SEATTLE, WASHINGTON . . . . . 20 . . .
BY: . . . . . .
CITY PURCHASING & CONTRACTING SERVICES DIRECTOR

INITIALS AND DATE		INITIALS AND DATE	
DESIGNED	JNC 12/06/2018	REVIEWED:	
CHECKED	AG 12/07/2018	DES.	CONST.
		SDOT	PROJ. MGR.
DRAWN	JDR 12/10/2018	RECEIVED	
CHECKED	CEB 12/10/2018	REVISED AS BUILT	

ALL WORK SHALL BE DONE IN ACCORDANCE WITH THE CITY OF SEATTLE STANDARD PLANS AND SPECIFICATIONS AND OTHER DOCUMENTS CALLED FOR IN SECTION 0-02.3 OF THE PROJECT MANUAL.

2018.12.20 18:32:18 -02'00'

Seattle Public Utilities
ORDINANCE NO. 125475 PW NO. 2018-064
FUND: DWF
SCALE: AS NOTED

PUMP STATION NO. 22 RETROFIT AND FORCE MAIN REPLACEMENT

JOB NO. PC C315071 R/W CO
VAULT PLAN NO. 776-474
SHEET 16 OF 71

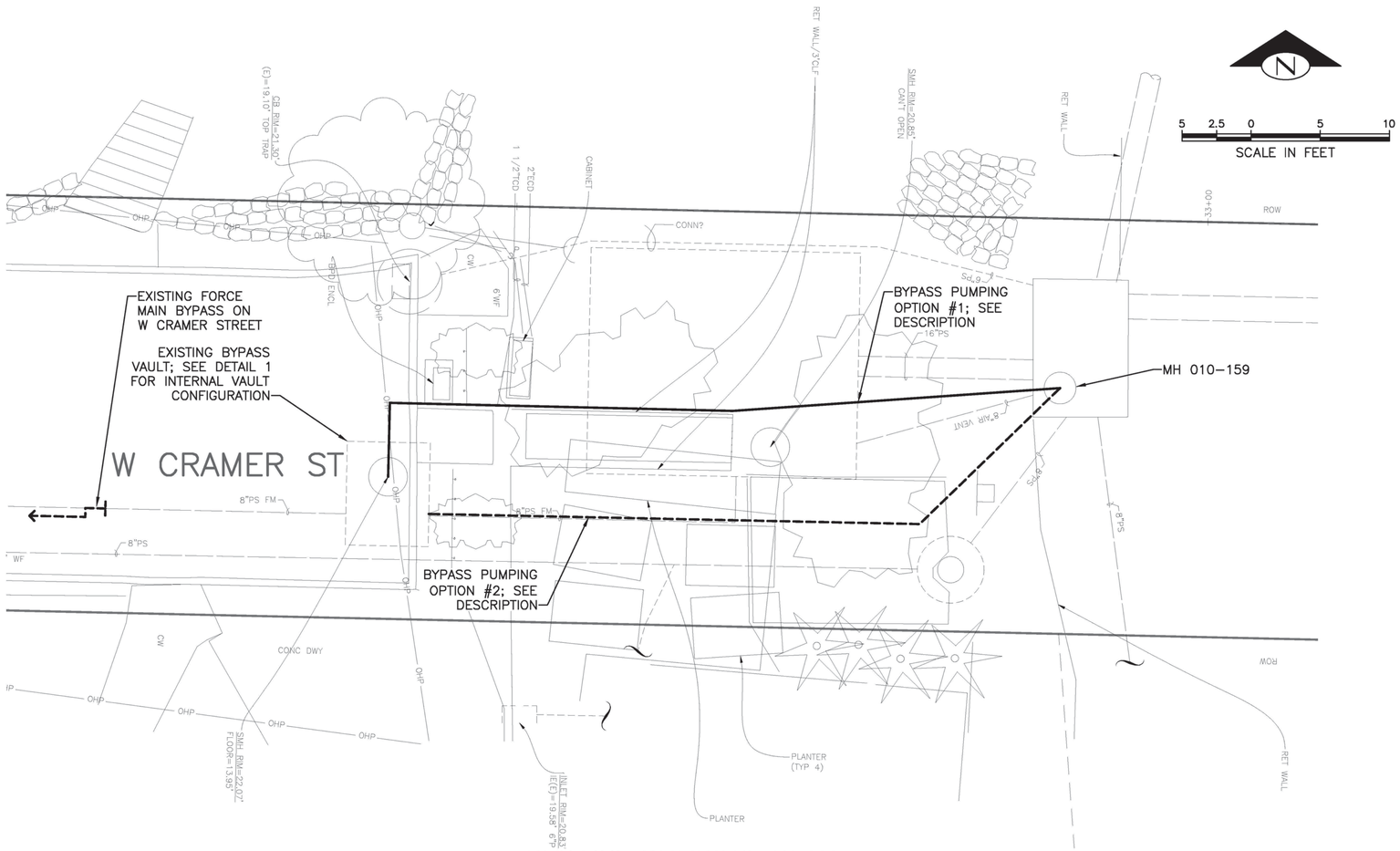

BYPASS PUMPING PLAN

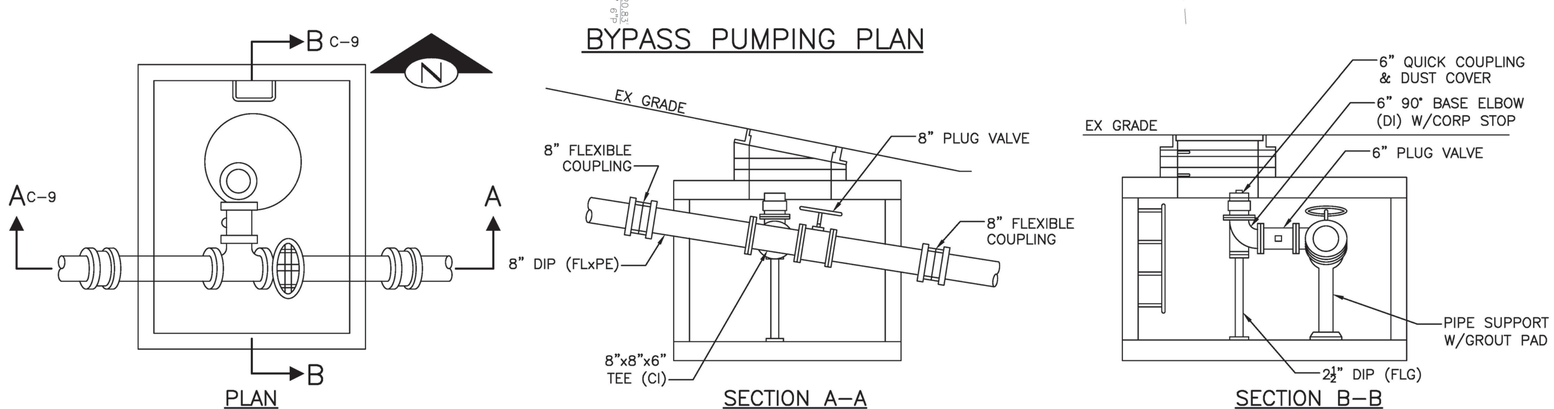

PLAN

SECTION A–A

SECTION B–B

EXISTING BYPASS VAULT

DETAIL 1 / –

NTS

GENERAL BYPASS PUMPING REQUIREMENTS:

1. REFER TO SPECIFICATION SECTION 01 35 03 FOR BYPASS PUMPING REQUIREMENTS.
2. REFER TO 2017 COS STANDARD SPECIFICATIONS, SECTION 7–17.3(2)I FOR ADDITIONAL TEMPORARY SEWER BYPASS REQUIREMENTS.
3. CONTRACTOR SHALL INSTALL AND MAINTAIN TEMPORARY BYPASS PUMPING SYSTEMS SO THAT THEY ARE COMPLETELY FUNCTIONAL THROUGHOUT THE REQUIRED PERIOD OF SERVICE.
4. INSTALLATION AND OPERATION OF TEMPORARY BYPASS PUMPING SYSTEMS SHALL BE THE SOLE RESPONSIBILITY OF THE CONTRACTOR DURING CONSTRUCTION.
5. SHOULD THE CONTRACTOR ELECT TO USE TEMPORARY ELECTRIC POWER FOR BYPASS PUMPING, THE CONTRACTOR IS RESPONSIBLE FOR COORDINATING TEMPORARY POWER WITH SEATTLE CITY LIGHT (SCL), AND ALL FEES ASSOCIATED WITH THE TEMPORARY POWER CONNECTION AND USE.
6. CONTRACTOR SHALL BE RESPONSIBLE FOR DEVELOPING A SPILL PREVENTION AND COUNTERMEASURE CONTROL (SPCC) PLAN FOR BYPASS PUMPING. PROVIDE CLEAN–UP AND DISPOSAL OF CONTAMINATED MATERIAL AND REPORTING FOR ALL SPILLS. REFER TO THE COS STANDARD SPECIFICATIONS, SECTION 1–07.28 FOR NOTIFICATION REQUIREMENTS IN THE EVENT OF A SEWER SPILL.
7. CONTRACTOR SHALL BE RESPONSIBLE AND LIABLE FOR ANY SEWAGE SPILLS RESULTING DURING BYPASS PUMPING. CONTRACTOR SHALL BE RESPONSIBLE FOR PROPER CLEAN–UP OF ANY AND ALL SPILLS RESULTING FROM BYPASS PUMPING OPERATIONS. CLEAN–UP COULD EXTEND BEYOND THE LIMITS OF WORK DEPENDING ON WHAT INFRASTRUCTURE IS AFFECTED AT THE SOLE COST OF THE CONTRACTOR AND AS DIRECTED BY REGULATORY AGENCIES.
8. CSO LEVEL MONITORING SHALL BE CONTINUOUS THROUGHOUT CONSTRUCTION AND CANNOT BE DISRUPTED DUE TO BYPASS PUMPING OPERATIONS.
9. CONTRACTOR SHALL COMPLETE ALL WORK IN CONFORMANCE WITH THE REQUIREMENTS OF THE CONSENT DECREE THAT WAS SIGNED AND ENTERED IN THE U.S. DISTRICT COURT ON JULY 3, 2013. A COPY OF THIS CONSENT DECREE HAS BEEN PROVIDED AS PART OF THE CONTRACT SPECIFICATIONS. ADDITIONALLY, THE CONTRACTOR SHALL PROVIDE WRITTEN ACKNOWLEDGEMENT OF RECEIPT OF THE CONSENT DECREE.

PUMP STATION BYPASS PUMPING OPTION DESCRIPTIONS:

OPTION #1:

1. BYPASS PUMPING ROUTED ABOVE GRADE FROM THE CSO CONTROL STRUCTURE TO THE EXISTING BYPASS VAULT; CONNECTION TO BE MADE THROUGH ACCESS MHS. BYPASS DISCHARGE TO CONNECT TO 6" QUICK COUPLING WITHIN EXISTING BYPASS VAULT.
2. ROUTING MAY BE FROM THE CSO CONTROL STRUCTURE TO THE NEW FLOW METER AND BYPASS VAULT IF IT IS IN SERVICE AND FUNCTIONAL.
3. SPECIFIC ABOVE GRADE PIPING ROUTE TO BE DETERMINED BY CONTRACTOR; PIPING ROUTE MAY BE MOVED OR MODIFIED TO ACCOMMODATE CONSTRUCTION ACTIVITIES.
4. PIPING SHALL BE SUITABLE FOR PRESSURIZED DISCHARGE AND FLOWS AND SHALL BE ADEQUATELY SECURED AND PROTECTED TO PREVENT DAMAGE OR SPILLS.

OPTION #2:

1. BYPASS PUMPING ROUTED BELOW GRADE FROM THE CSO CONTROL STRUCTURE TO THE EXISTING BYPASS VAULT; CONNECTION TO BE MADE THROUGH STRUCTURE SIDE WALLS (CONCRETE PENETRATIONS REQUIRED THROUGH THE STRUCTURES).
2. SPECIFIC PIPING ROUTE, DEPTH AND MATERIALS OF CONSTRUCTION TO BE DESIGNED BY CONTRACTOR.
3. MODIFICATIONS TO THE BYPASS VAULT INTERNAL PIPING AND VALVING CONFIGURATION MAY BE REQUIRED TO ACCOMMODATE THIS APPROACH.
3. THIS OPTION IS NOT FEASIBLE UNTIL THE NEW POWER SERVICE CONNECTIONS ARE INSTALLED AND THE EXISTING GENERATOR CAN BE REMOVED FROM SERVICE; REFER TO THE ELECTRICAL DRAWINGS FOR ELECTRICAL CONSTRUCTION PHASING REQUIREMENTS.
4. PIPING SHALL BE FILLED, PLUGGED AND ABANDONED IN PLACE IN ACCORDANCE WITH THE 2017 COS STD SPECIFICATIONS WHEN BYPASS PUMPING IS NO LONGER REQUIRED.

OPTION #3:

1. OTHER BYPASS PUMPING OPTIONS OR CONFIGURATIONS MAY BE SUBMITTED BY THE CONTRACTOR FOR REVIEW AND CONSIDERATION DURING CONSTRUCTION AS NEEDED TO ACCOMMODATE CONSTRUCTION ACTIVITIES AND SEQUENCING.

FORCE MAIN BYPASS PUMPING ON W CRAMER STREET

1. INSTALLATION WORK FOR THE NEW 12" DIP SEWER MAIN ON W CRAMER STREET WILL ENDANGER THE NEARBY EXISTING 8" CAST IRON SEWER FORCE MAIN AND BYPASS PUMPING OF THIS SECTION IS REQUIRED. ONE POSSIBLE OPTION FOR BYPASSING THIS SECTIONS IS AS FOLLOWS:

   CONNECT THE BYPASS PIPE TO THE EXISTING 8" FORCE MAIN IN THE ROAD WEST OF THE RESIDUAL DRIVEWAY SO NOT TO BLOCK VEHICLE ACCESS TO THE RESIDENTS. RUN THE BYPASS PIPE ON THE ROAD SURFACE AND UP THE HILL ALONG THE SOUTH SIDE OF W CRAMER STREET. THEN AT THE INTERSECTION OF W CRAMER STREET AND 40TH AVE W THE BYPASS RECONNECTS TO THE BURIED FORCE MAIN PIPE (EITHER THE EXISTING OR NEW).

PUMP STATION
BYPASS PUMPING PLAN
C–9

VAULT SERIAL NO.	DATE	MARK	NATURE REVISIONS	MADE	CHK'D	REV'D
37295						

CDM Smith
14432 SE Eastgate Way
Suite 100
Bellevue, WA 98007
Tel: (425) 519-8300

REVIEWED BY SPU/WATER ENGINEERING ..... 20.....
REVIEWED BY SPU/DRAINAGE ..... 20.....
APPROVED BY SDOT STREET IMPROVEMENT PERMITTING ..... 20.....

APPROVED FOR ADVERTISING
LIZ ALZEER
DEPARTMENT OF FINANCE & ADMINISTRATIVE SERVICES
SEATTLE, WASHINGTON . . . . . 20 . . .
BY: . . . . . .
CITY PURCHASING & CONTRACTING SERVICES DIRECTOR

INITIALS AND DATE		INITIALS AND DATE	
DESIGNED JNC 12/06/2018		REVIEWED: DES.	CONST.
CHECKED AG 12/07/2018		SDOT	PROJ. MGR.
DRAWN JDR 12/10/2018		RECEIVED	
CHECKED CEB 12/10/2018		REVISED AS BUILT	

ALL WORK SHALL BE DONE IN ACCORDANCE WITH THE CITY OF SEATTLE STANDARD PLANS AND SPECIFICATIONS AND OTHER DOCUMENTS CALLED FOR IN SECTION 0–02.3 OF THE PROJECT MANUAL.

2018.12.20 18:32:38-02'00'

Seattle Public Utilities
ORDINANCE NO. 125475 PW NO. 2018–064
FUND: DWF
SCALE: AS NOTED

PUMP STATION NO. 22 RETROFIT AND FORCE MAIN REPLACEMENT

JOB NO. PC C315071 R/W CO
VAULT PLAN NO. 776–474
SHEET 17 OF 71

C:\pw_pl1\robinsonjd\d0575339\C09 261-1009_P-SSWR-PUMP.dwg
Robinsonjd Dec-10-18 10:34am

NOTES:

1. ELEVATION REPRESENTATIVE OF RAILING. CONSTRUCT PER APPROVED SHOP DRAWINGS.
2. PROVIDE ON RAILING DECORATIVE ART TO BE APPROVED BY SPU.
3. PROVIDE BLACK COLOR ALUMINUM RAILING AND GATE SYSTEM SUITABLE FOR EXTERIOR INSTALLATION IN PUBLIC SPACES.

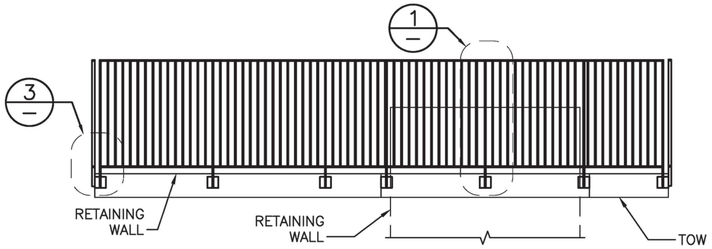

4 2 0 4 8
SCALE IN FEET

ELEVATION A / C–2
1/4"=1'–0"

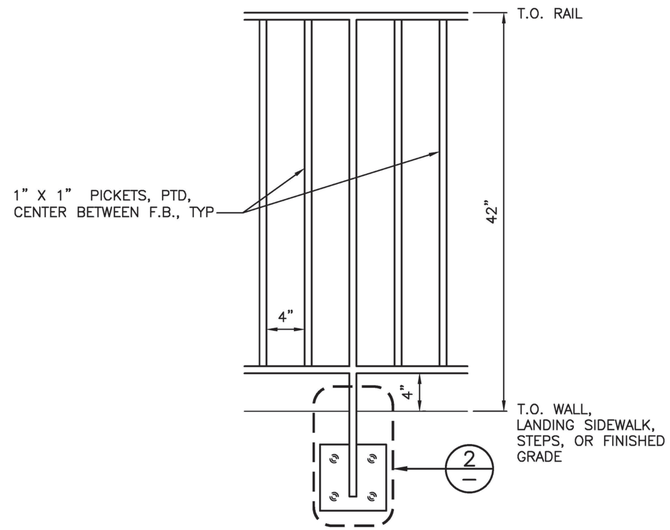

RAILING DETAIL NOTES:

1. NOT USED.
2. FENCE AND GATE DETAILS ARE REPRESENTATIVE, CONSTRUCT PER APPROVED SHOP DRAWINGS.
3. WHERE ATTACHING TO EXISTING CONCRETE USED 5/8" DIA 316 SS EXPANSION ANCHOR WITH 4" MINIMUM EMBEDMENT.

½ ¼ 0 ½ 1
SCALE IN FEET

RAILING DETAIL 1 / C–2
1–1/2"=1'–0"

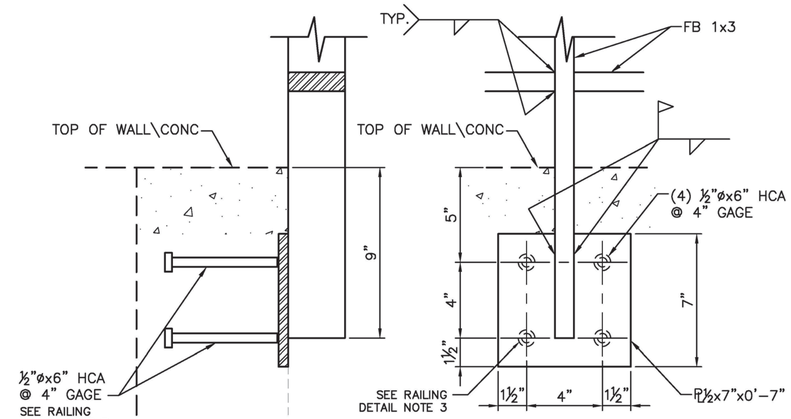

SECTION ELEVATION

3 0 3 6
SCALE IN INCHES

DETAIL 2 / –
3"=1'–0"

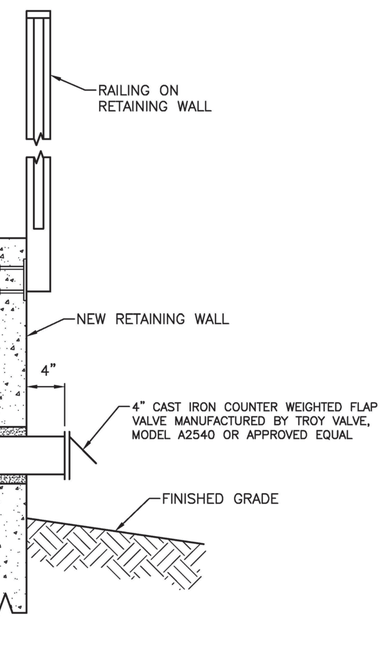

FLAP VALVE DRAIN

DETAIL 4 / –
NTS

NOTE:

DETAIL DEPICTS OUTSIDE CORNER AS REPRESENTATIVE. INSIDE CORNERS SIMILAR, SUBMIT SHOP DRAWINGS FOR APPROVAL.

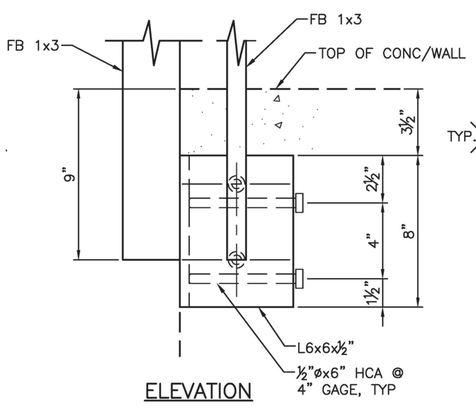

ELEVATION

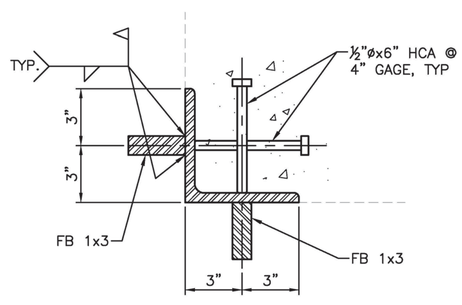

PLAN

3 0 3 6
SCALE IN INCHES

DETAIL 3 / –
3"=1'–0"

SEWER DETAIL 1
C–10

MARK	DATE	NATURE REVISIONS	MADE	CHK'D	REV'D

VAULT SERIAL NO. 3/295

C:\pw_p11\robinsonjd\d0575339\c10 261-1009_P-DETL.dwg
Robinsonjd Dec-11-18 5:06pm

CDM Smith
14432 SE Eastgate Way
Suite 100
Bellevue, WA 98007
Tel: (425) 519-8300

REVIEWED BY SPU/WATER ENGINEERING ..... 20.....
REVIEWED BY SPU/DRAINAGE ..... 20.....
APPROVED BY SDOT STREET IMPROVEMENT PERMITTING ..... 20.....

APPROVED FOR ADVERTISING
LIZ ALZEER
DEPARTMENT OF FINANCE & ADMINISTRATIVE SERVICES
SEATTLE, WASHINGTON . . . . . 20 . . .
BY: . . . . . .
CITY PURCHASING & CONTRACTING SERVICES DIRECTOR

INITIALS AND DATE		INITIALS AND DATE	
DESIGNED JNC 12/06/2018		REVIEWED:	
CHECKED AG 12/07/2018		DES.	CONST.
		SDOT	PROJ. MGR.
DRAWN JDR 12/10/2018		RECEIVED	
CHECKED CEB 12/10/2018		REVISED AS BUILT	

ALL WORK SHALL BE DONE IN ACCORDANCE WITH THE CITY OF SEATTLE STANDARD PLANS AND SPECIFICATIONS AND OTHER DOCUMENTS CALLED FOR IN SECTION 0–02.3 OF THE PROJECT MANUAL.

2018.12.20 18:32:56-02'00'

Seattle Public Utilities
ORDINANCE NO. 125475 PW NO. 2018–064
FUND: DWF
SCALE: AS NOTED

PUMP STATION NO. 22 RETROFIT AND FORCE MAIN REPLACEMENT

JOB NO. PC C315071 R/W CO
VAULT PLAN NO. 776–474
SHEET 18 OF 71

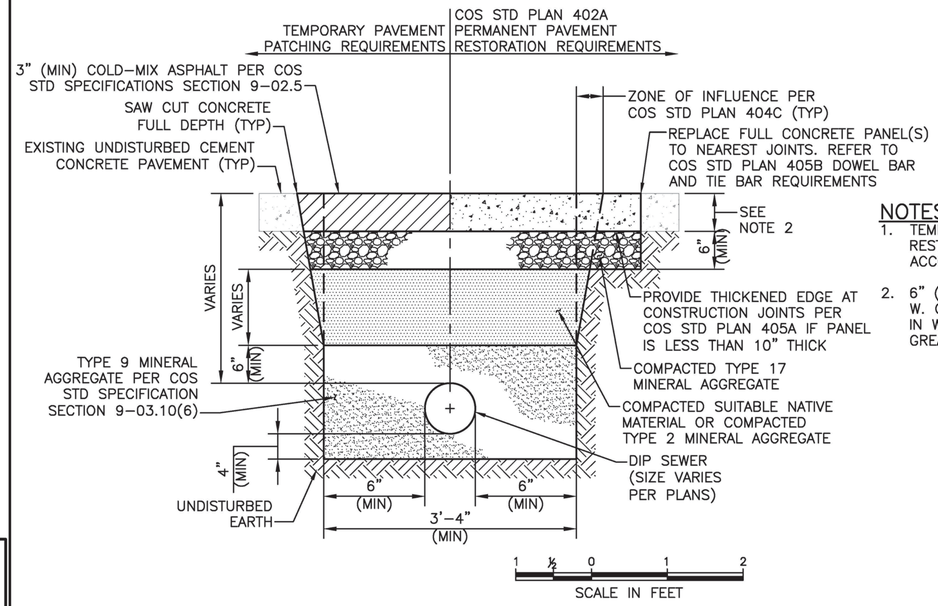

NOTES:

1. TEMPORARY AND PERMANENT PAVEMENT RESTORATION SHALL BE COMPLETED IN ACCORDANCE WITH THE R/W ORDINANCE.
2. 6" (MIN) IN W. CRAMER ST. AND 40TH AVE. W. OR MATCH EXISTING IF GREATER; 10" (MIN) IN W. COMMODORE WAY OR MATCH EXISTING IF GREATER.

SEWER TRENCH

DETAIL 1 / —

1"=1'-0"

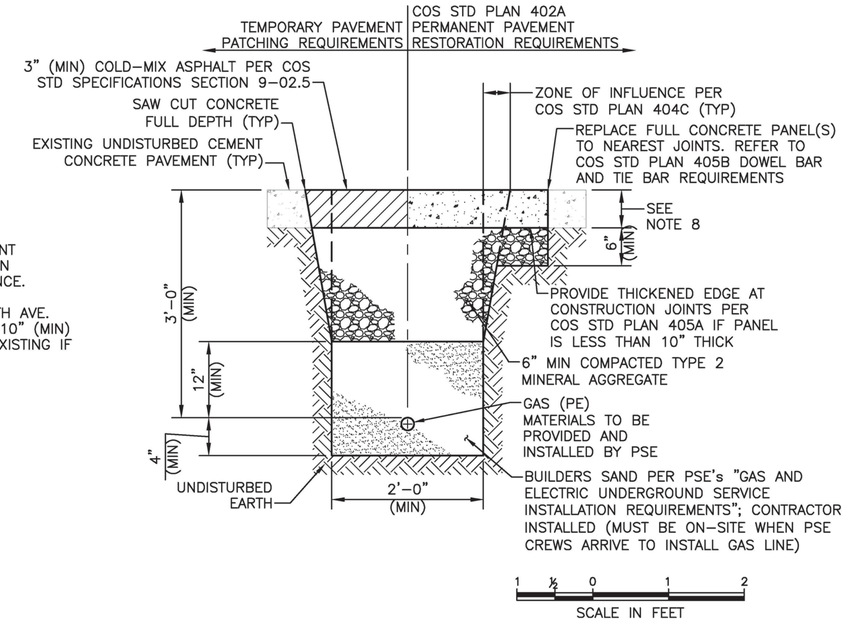

NATURAL GAS LINE TRENCH

DETAIL 2 / —

1"=1'-0"

NOTES:

1. PSE TO BE NOTIFIED A MINIMUM OF 25 WORKING DAYS IN ADVANCE OF GAS LINE INSTALLATION WORK.
2. NATURAL GAS TRENCH SHALL BE EXCAVATED AND PREPARED BY CONTRACTOR PRIOR TO PSE ARRIVING ON SITE.
3. PSE WILL PROVIDE THE GAS MAIN MATERIALS, INSTALL THE GAS MAIN AND COMPLETE THE SWITCHOVER.
4. CONTRACTOR SHALL BE RESPONSIBLE FOR PLACING THE BEDDING, BACKFILL, PATCH AND PERMANENT PAVEMENT RESTORATION.
5. REFER TO THE "GAS SITE PREPARATION CHECKLIST FOR CUSTOMER PROVIDED TRENCH PRJECTS" PROVIDED BY PSE FOR ADDITIONAL REQUIREMENTS TO AVOID DELAY.
6. REFER TO PSE's "GAS AND ELECTRIC UNDERGROUND SERVICE INSTALLATION REQUIREMENTS" FOR ADDITIONAL INFORMATION.
7. TEMPORARY AND PERMANENT PAVEMENT RESTORATION SHALL BE COMPLETED IN ACCORDANCE WITH THE ROWORR.
8. 6" (MIN) IN W. CRAMER ST. AND 40TH AVE. W. OR MATCH EXISTING IF GREATER; 10" (MIN) IN W. COMMODORE WAY OR MATCH EXISTING IF GREATER.

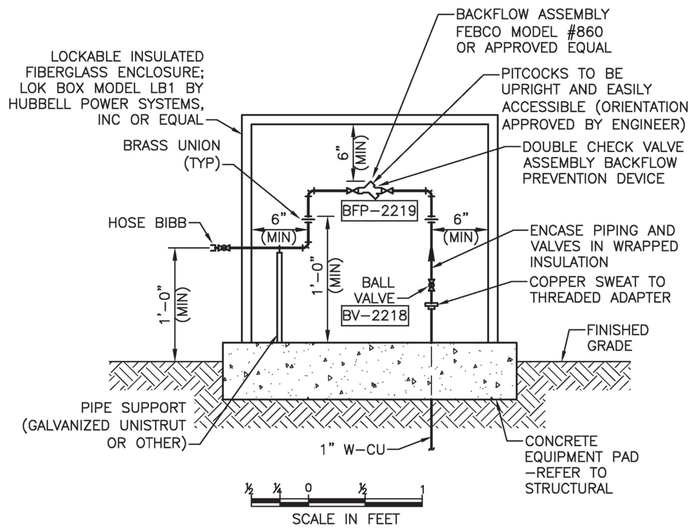

DOUBLE CHECK VALVE/BACKFLOW PREVENTER

DETAIL 3 / —

1-1/2"=1'-0"

SEWER DETAIL 2
C-11

VAULT SERIAL NO.	DATE	MARK	NATURE REVISIONS	MADE	CHK'D	REV'D
37295						

C:\pw_pl\robinsonjd\d0575339\C11 281-1009_P-DETL.dwg
Robinsonjd Dec-10-18 10:47am

CDM Smith
14432 SE Eastgate Way
Suite 100
Bellevue, WA 98007
Tel: (425) 519-8300

REVIEWED BY SPU/WATER ENGINEERING ..... 20.....
REVIEWED BY SPU/DRAINAGE ..... 20.....
APPROVED BY SDOT STREET IMPROVEMENT PERMITTING ..... 20.....

APPROVED FOR ADVERTISING
LIZ ALZEER
DEPARTMENT OF FINANCE & ADMINISTRATIVE SERVICES
SEATTLE, WASHINGTON . . . . . 20 . . .
BY: . . . . . .
CITY PURCHASING & CONTRACTING SERVICES DIRECTOR

INITIALS AND DATE		INITIALS AND DATE	
DESIGNED REK 12/06/2018		REVIEWED: DES.	CONST.
CHECKED JNC 12/07/2018		SDOT	PROJ. MGR.
DRAWN JDR 12/10/2018		RECEIVED	
CHECKED CEB 12/10/2018		REVISED AS BUILT	

ALL WORK SHALL BE DONE IN ACCORDANCE WITH THE CITY OF SEATTLE STANDARD PLANS AND SPECIFICATIONS AND OTHER DOCUMENTS CALLED FOR IN SECTION 0-02.3 OF THE PROJECT MANUAL.

2018.12.20 18:33:18-02'00'

Seattle Public Utilities

ORDINANCE NO. 125475 PW NO. 2018-064
FUND: DWF
SCALE: AS NOTED

PUMP STATION NO. 22 RETROFIT AND FORCE MAIN REPLACEMENT

JOB NO. PC C315071 R/W CO

VAULT PLAN NO. 776-474

SHEET 19 OF 71

TYPE A BLOCKING FOR 11¼° & 22½° VERTICAL BENDS

PIPE SIZE NOM DIA INCHES	TEST PRESSURE PSI	VB VERTICAL BEND DEGREES	NO OF CU FT OF CONC BLOCKING	S SIDE OF CUBE FEET	d DIA OF SHACKLE RODS (2) INCHES	L DEPTH OF RODS IN CONCRETE INCHES
12"	125	11¼	32	3.5	1	24
		22½	62	4.0	1	36

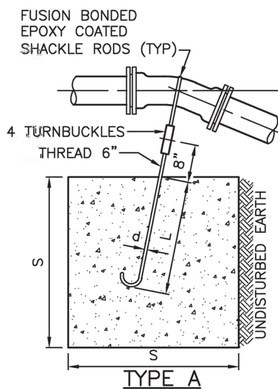

TYPE A

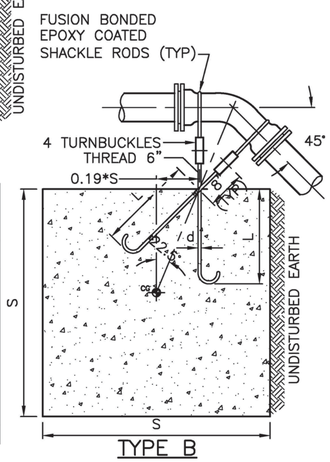

TYPE B

TYPE B BLOCKING FOR 45° VERTICAL BENDS

PIPE SIZE NOM DIA INCHES	TEST PRESSURE PSI	VB VERTICAL BEND DEGREES	NO OF CU FT OF CONC BLOCKING	S SIDE OF CUBE FEET	d DIA OF SHACKLE RODS (2) INCHES	L DEPTH OF RODS IN CONCRETE INCHES
10"	125	45	64	4.0	34	20

SEWER FORCE MAIN THRUST BLOCKING
VERTICAL FITTINGS

DETAIL 1 / —
NTS

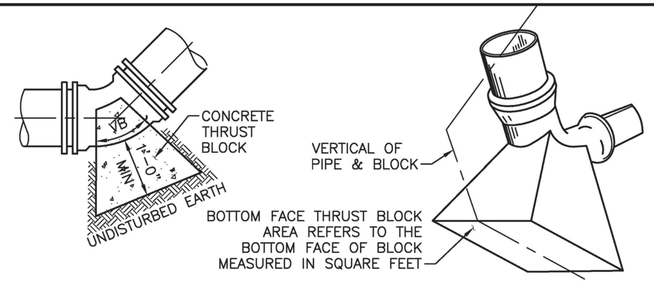

TYPE C

TYPE "C" BLOCKING FOR 11¼°, 22½°, 45° AND 90° VERTICAL BENDS

THRUST BLOCK REQUIRED BEARING AREA IN SQUARE FEET

	SOIL	REQUIRED BEARING AREA BASED ON ALLOWABLE SOIL BEARING VALUE OF 2,000 PSF. REVISE REQUIRED BEARING AREA, IF NECESSARY, BASED ON ACTUAL SOIL CONDITIONS.		
	FITTING	90° BEND	TEE, 45° BEND & DEAD END	11¼° & 22½° BEND
PIPE SIZE	10"	9.0	6.5	2.5
	12"	12.5	9.0	3.5
	AREAS CALCULATED ON 125 PSI TEST PRESSURE AND 3'-0" MIN COVER OVER SEWER FORCE MAIN			

NOTES:

1. ALL BLOCKING FOR VERTICAL FITTINGS (POURED IN PLACE) MUST BEAR AGAINST UNDISTURBED NATIVE GROUND.
2. ALL POURED THRUST BLOCKS MUST BE BACKFILLED AFTER MIN. 1 DAY. PRESSURE TESTING MUST OCCUR AFTER CONCRETE HAS REACHED f'c.
3. ALL BLOCKING MUST BE CONCRETE CL 3000.
4. AFTER INSTALLATION, SHACKLE RODS & TURNBUCKLES MUST BE CLEANED AND COATED WITH 2 COATS OF ASPHALTIC VARNISH, ROYSTON ROYKOTE #612M OR APPROVED EQUAL.
5. SHACKLE RODS MUST BE FUSION BONDED EPOXY COATED ROUND MILD STEEL, ASTM A 36, WITH THREADS ON ENDS ONLY.
6. BLOCKING AGAINST FITTINGS MUST BEAR AGAINST THE GREATEST FITTING SURFACE AREA POSSIBLE, BUT MUST NOT COVER OR ENCLOSE BELL ENDS, JOINT BOLTS OR GLANDS. REASONABLE ACCESS TO BOLTS AND GLANDS MUST BE PROVIDED.

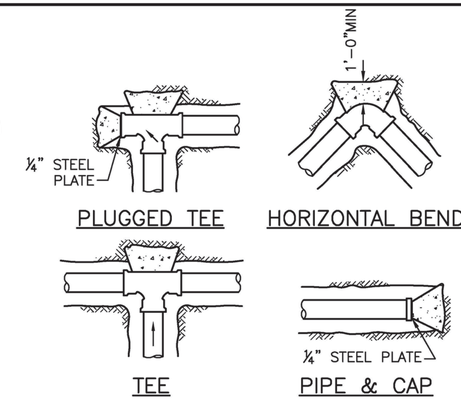

THRUST BLOCK REQUIRED BEARING AREA IN SQUARE FEET

	SOIL	REQUIRED BEARING AREA BASED ON ALLOWABLE SOIL BEARING VALUE OF 2,000 PSF. REVISE REQUIRED BEARING AREA, IF NECESSARY, BASED ON ACTUAL SOIL CONDITIONS			
	FITTING	90° BEND	TEE	45° BEND CAP OR PLUG	11¼° & 22½° BEND
PIPE SIZE	10"	9.0	6.5	5.0	2.5
	12"	12.5	9.0	7.0	3.5
	AREAS CALCULATED ON 125 PSI TEST PRESSURE AND 3'-0" MIN COVER OVER SEWER FORCE MAIN				

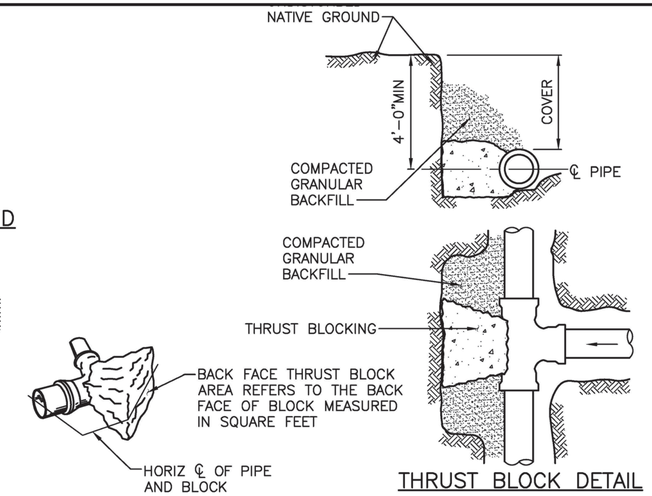

THRUST BLOCK DETAIL

NOTES:

1. ALL BLOCKING FOR HORIZONTAL FITTINGS (POURED IN PLACE) MUST BEAR AGAINST UNDISTURBED NATIVE GROUND.
2. ALL POURED THRUST BLOCKS MUST BE BACKFILLED AFTER MIN. 1 DAY. PRESSURE TESTING MUST OCCUR AFTER CONCRETE HAS REACHED f'c.
3. ALL BLOCKING TO BE CONCRETE CL 3000.
4. BLOCKING AGAINST FITTINGS MUST BEAR AGAINST THE GREATEST FITTING SURFACE AREA POSSIBLE, BUT MUST NOT COVER OR ENCLOSE BELL ENDS, JOINT BOLTS OR GLANDS. ACCESS TO BOLTS AND GLANDS MUST BE PROVIDED.
5. ALL HORIZONTAL BLOCKING THRUST AREAS MUST BE CENTERED ON PIPE.
6. WHERE POURED-IN-PLACE BLOCKING IS REQUIRED AT A POINT OF CONNECTION TO AN EXISTING WATERMAIN, THE BLOCKING MUST BE INSTALLED PRIOR TO CONNECTION.
7. TEMPORARY BLOCKING, IF USED, MUST BE APPROVED BY ENGINEER.

SEWER FORCE MAIN THRUST BLOCKING
HORIZONTAL FITTINGS

DETAIL 2 / —
NTS

NOTE:

1. DETAIL SHOWN IS FOR PVC PIPE TO CONCRETE SEWER PIPE, DETAIL FOR USE OF OTHER PIPE MATERIALS IS SIMILAR. REFER TO MANUFACTURERS INSTALLATION INSTRUCTIONS.
2. FOR 12" DIP TIE-IN TO THE FT LAWTON TUNNEL USE INSERTA-TEE 12" C900/905, PART #12C9144BR.

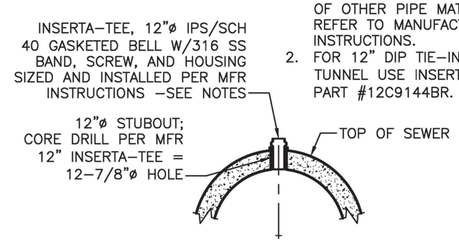

PVC PIPE CONNECTION

PIPE TAP FOR CONCRETE PIPE

DETAIL 3 / C-8
NTS

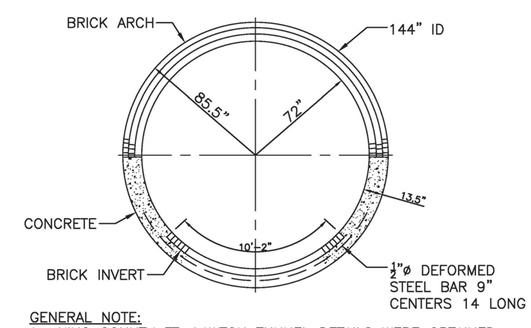

GENERAL NOTE:

1. KING COUNTY FT. LAWTON TUNNEL DETAILS WERE OBTAINED FROM THE "NORTH TRUNK SEWER, INTERBAY DISTRICT, OPEN CUT AND TUNNEL SECTIONS" DRAWING APPROVED BY THE BOARD OF PUBLIC WORKS IN 1911. RECORD SET NUMBER: 782-10.

EXISTING 144" ID KING COUNTY FORT
LAWTON TUNNEL (NORTH INTERCEPTOR)

DETAIL 4 / C-8
NTS

SEWER DETAIL 3
C-12

MARK	DATE	NATURE REVISIONS	MADE	CHK'D	REV'D

VAULT SERIAL NO. 37295

C:\pw_pl\robinsonjd\d0575339\C12 281-1009_P-DETL.dwg
Robinsonjd Dec-10-18 10:49am

CDM Smith
14432 SE Eastgate Way
Suite 100
Bellevue, WA 98007
Tel: (425) 519-8300

REVIEWED BY SPU/WATER ENGINEERING ..... 20.....
REVIEWED BY SPU/DRAINAGE ..... 20.....
APPROVED BY SDOT STREET IMPROVEMENT PERMITTING ..... 20.....

APPROVED FOR ADVERTISING
LIZ ALZEER
DEPARTMENT OF FINANCE & ADMINISTRATIVE SERVICES
SEATTLE, WASHINGTON . . . . . 20 . . .
BY: . . . . . .
CITY PURCHASING & CONTRACTING SERVICES DIRECTOR

INITIALS AND DATE		INITIALS AND DATE	
DESIGNED JNC 12/06/2018		REVIEWED: DES.	CONST.
CHECKED AG 12/07/2018		SDOT	PROJ. MGR.
DRAWN JDR 12/10/2018		RECEIVED	
CHECKED CEB 12/10/2018		REVISED AS BUILT	

ALL WORK SHALL BE DONE IN ACCORDANCE WITH THE CITY OF SEATTLE STANDARD PLANS AND SPECIFICATIONS AND OTHER DOCUMENTS CALLED FOR IN SECTION 0-02.3 OF THE PROJECT MANUAL.

2018.12.20 18:33:40+02'00'

Seattle Public Utilities
ORDINANCE NO. 125475 PW NO. 2018-064
FUND: DWF
SCALE: AS NOTED

PUMP STATION NO. 22 RETROFIT AND FORCE MAIN REPLACEMENT

JOB NO. PC C315071 R/W CO
VAULT PLAN NO. 776-474
SHEET 20 OF 71

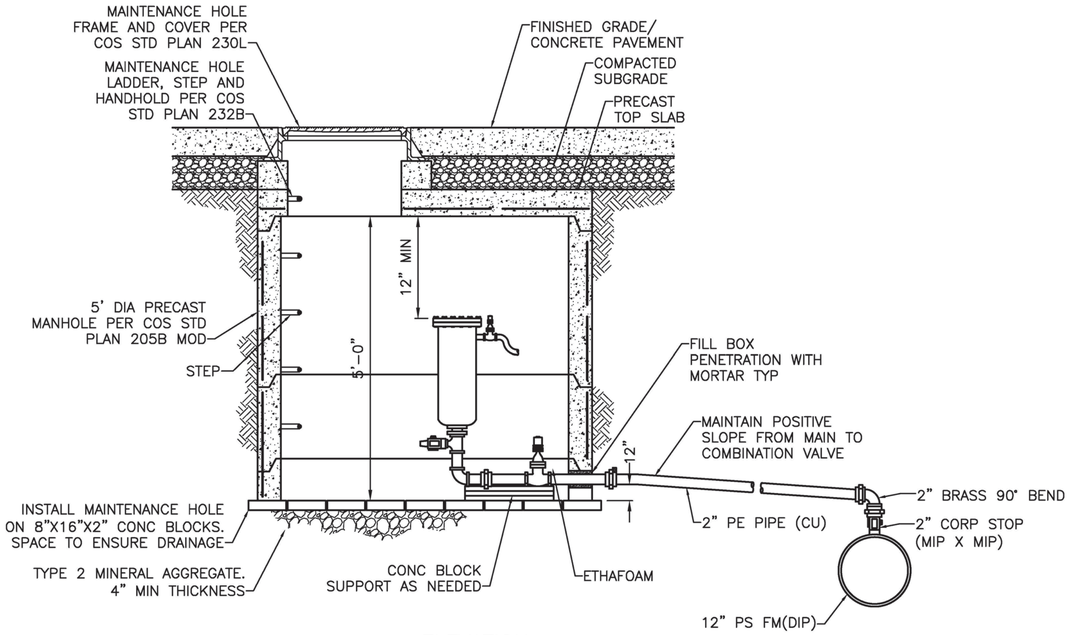

ELEVATION

NOTES:

1. COMBINATION AIR RELEASE AND VACUUM VALVE SHALL BE A 2" SIZE MINIMUM UNLESS OTHERWISE SHOWN ON THE PLANS.
2. TEE MUST BE 2"X2"X1" WITH 1" CORP STOP FOR 2" COMBINATION VALVE.

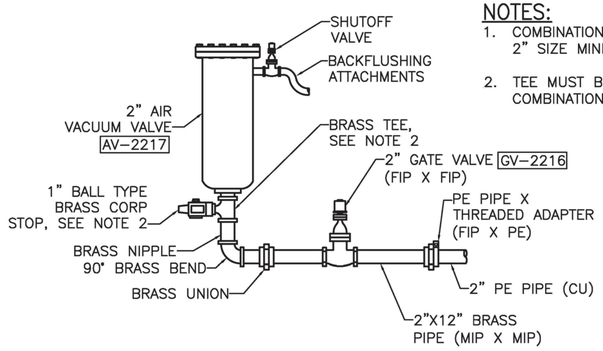

VALVE ASSEMBLY DETAIL

PS FM AIR RELEASE AIR VACUUM VALVE MH

DETAIL 1 / C-6

NTS

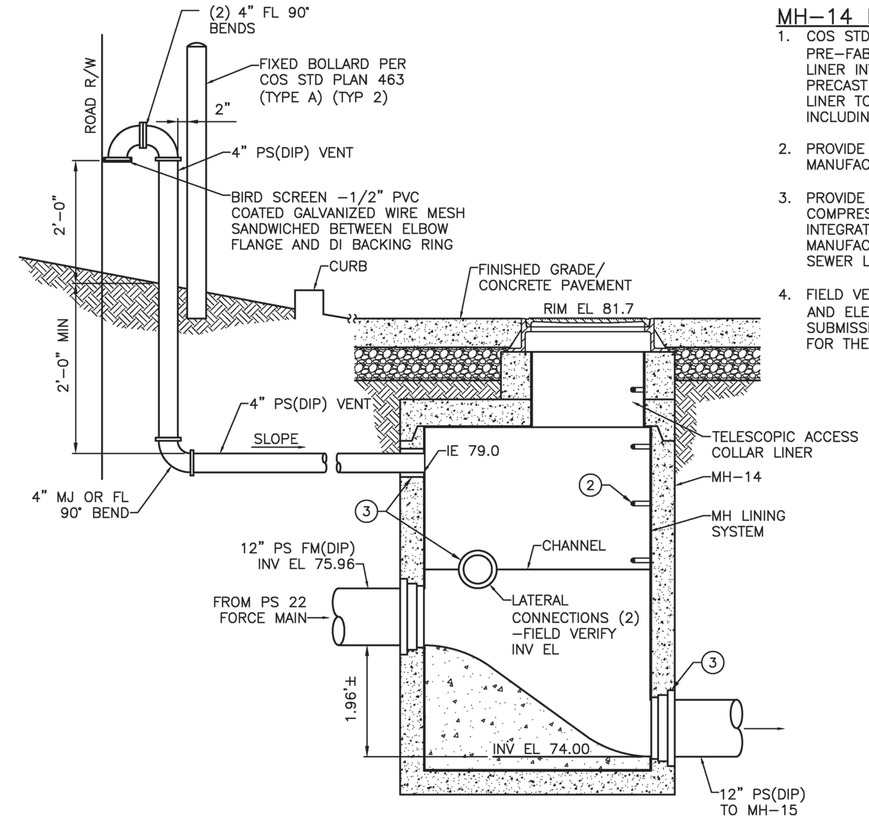

MH-14

DETAIL 2 / C-6

NTS

MH-14 LINER NOTES:

1. COS STD PLAN TYPE 204B MODIFIED WITH PRE-FABRICATED FIBER REINFORCED POLYMER (FRP) LINER INTEGRALLY CAST AND ANCHORED INTO A PRECAST CONCRETE MAINTENANCE HOLE. MH FRP LINER TO COMPLETELY COVER THE INSIDE OF THE MH INCLUDING A FORMED MH BASE LINER.
2. PROVIDE PLASTIC LADDER RUNGS DESIGNED AND MANUFACTURED BY THE MH LINER MANUFACTURER.
3. PROVIDE 12" DIP CONNECTIONS OF BELL AND COMPRESSION GASKETS SYSTEMS THAT ARE INTEGRATED INTO THE MH LINER BY THE MH LINER MANUFACTURER. PROVIDE BOOT CONNECTIONS FOR SEWER LATERALS, AND AIR VENT.
4. FIELD VERIFY SEWER LATERAL CONNECTIONS (POSITION AND ELEVATION) AND INCLUDE IN SHOP DRAWING SUBMISSION. DO NOT PROVIDE DROP PIPES AT MH FOR THE SEWER LATERALS.

VAULT SERIAL NO.	DATE	MARK	NATURE REVISIONS	MADE	CHK'D	REV'D
37295						

SEWER DETAIL 4
C-13

CDM Smith
14432 SE Eastgate Way
Suite 100
Bellevue, WA 98007
Tel: (425) 519-8300

REVIEWED BY SPU/WATER ENGINEERING ..... 20.....
REVIEWED BY SPU/DRAINAGE ..... 20.....
APPROVED BY SDOT STREET IMPROVEMENT PERMITTING ..... 20.....

APPROVED FOR ADVERTISING
LIZ ALZEER
DEPARTMENT OF FINANCE & ADMINISTRATIVE SERVICES
SEATTLE, WASHINGTON . . . . . 20 . . .
BY: . . . . . .
CITY PURCHASING & CONTRACTING SERVICES DIRECTOR

INITIALS AND DATE		INITIALS AND DATE	
DESIGNED REK 12/06/2018		REVIEWED: DES.	CONST.
CHECKED JNC 12/07/2018		SDOT	PROJ. MGR.
DRAWN JDR 12/10/2018		RECEIVED	
CHECKED CEB 12/10/2018		REVISED AS BUILT	

ALL WORK SHALL BE DONE IN ACCORDANCE WITH THE CITY OF SEATTLE STANDARD PLANS AND SPECIFICATIONS AND OTHER DOCUMENTS CALLED FOR IN SECTION 0-02.3 OF THE PROJECT MANUAL.

2018.12.20 18:34:01-02'00'

Seattle Public Utilities

ORDINANCE NO. 125475 PW NO. 2018-064
FUND: DWF
SCALE: AS NOTED

PUMP STATION NO. 22 RETROFIT AND FORCE MAIN REPLACEMENT

JOB NO. PC C315071 R/W CO
VAULT PLAN NO. 776-474
SHEET 21 OF 71

C:\pw_pl1\robinsonjd\d0575339\C13 261-1009_P-DETL.dwg
Robinsonjd Dec-11-18 5:47pm

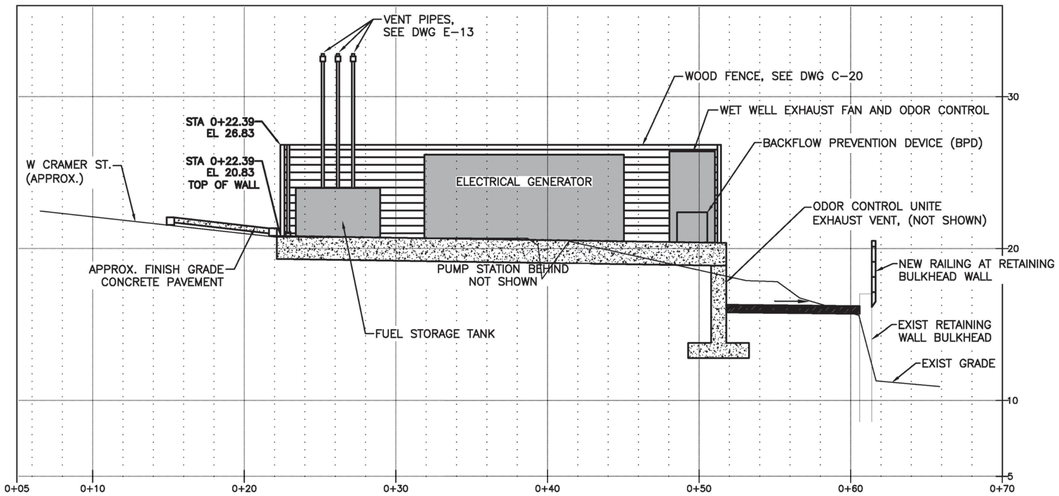

PUMP STATION SITE

SECTION A–A C-2

1"=5'

1" = 5'
2.5 0 5

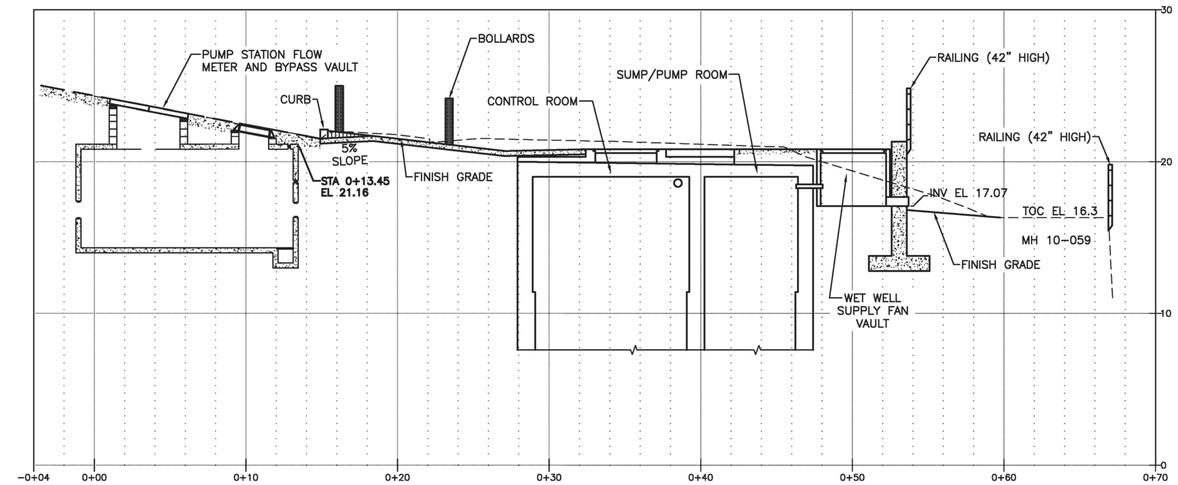

PUMP STATION SITE

SECTION B–B C-2

1"=5'

1" = 5'
2.5 0 5

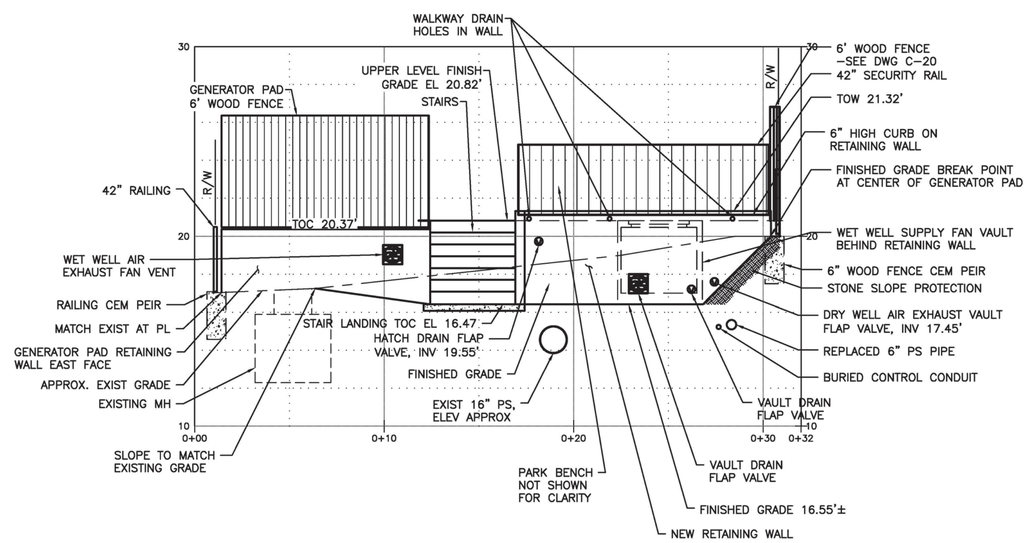

NORTH–SOUTH RETAINING WALL

SECTION D–D C-2

3"=1'

3" = 1'– 0"
.25 0 .25 .5

NOTES:

1. GRADE ELEVATIONS ARE APPROXIMATE.
2. FIELD VERIFY ELEVATION AND POSITION OF ALL BURIED UTILITIES PRIOR TO START OF WORK.

SEWER DETAIL 5
C–14

VAULT SERIAL NO.	DATE	MARK	NATURE REVISIONS	MADE	CHK'D	REV'D
37295						

C:\pw_ap1\robinsonjd\d0575339\C14 261-1009_P-SITE-PROF.dwg
Robinsonjd Dec-19-18 12:35pm

CDM Smith
14432 SE Eastgate Way
Suite 100
Bellevue, WA 98007
Tel: (425) 519-8300

REVIEWED BY SPU/WATER ENGINEERING ..... 20.....
REVIEWED BY SPU/DRAINAGE ..... 20.....
APPROVED BY SDOT STREET IMPROVEMENT PERMITTING ..... 20.....

APPROVED FOR ADVERTISING
LIZ ALZEER
DEPARTMENT OF FINANCE & ADMINISTRATIVE SERVICES
SEATTLE, WASHINGTON . . . . . 20 . . .
BY: . . . . . .
CITY PURCHASING & CONTRACTING SERVICES DIRECTOR

INITIALS AND DATE	INITIALS AND DATE
DESIGNED JNC 12/06/2018	REVIEWED: DES. CONST. SDOT PROJ. MGR.
CHECKED AG 12/07/2018	RECEIVED
DRAWN JDR 12/10/2018	REVISED AS BUILT
CHECKED CEB 12/10/2018	

ALL WORK SHALL BE DONE IN ACCORDANCE WITH THE CITY OF SEATTLE STANDARD PLANS AND SPECIFICATIONS AND OTHER DOCUMENTS CALLED FOR IN SECTION 0-02.3 OF THE PROJECT MANUAL.

JOHN N CRIPPEN
STATE OF WASHINGTON
41561
REGISTERED PROFESSIONAL ENGINEER
2019.01.20 18:34:26-02'00'

Seattle Public Utilities
ORDINANCE NO. 125475 PW NO. 2018-064
FUND: DWF
SCALE: H. 1"=5', V. 1"=5'

PUMP STATION NO. 22 RETROFIT AND FORCE MAIN REPLACEMENT

JOB NO. PC C315071 R/W CO
VAULT PLAN NO. 776-474
SHEET 22 OF 71

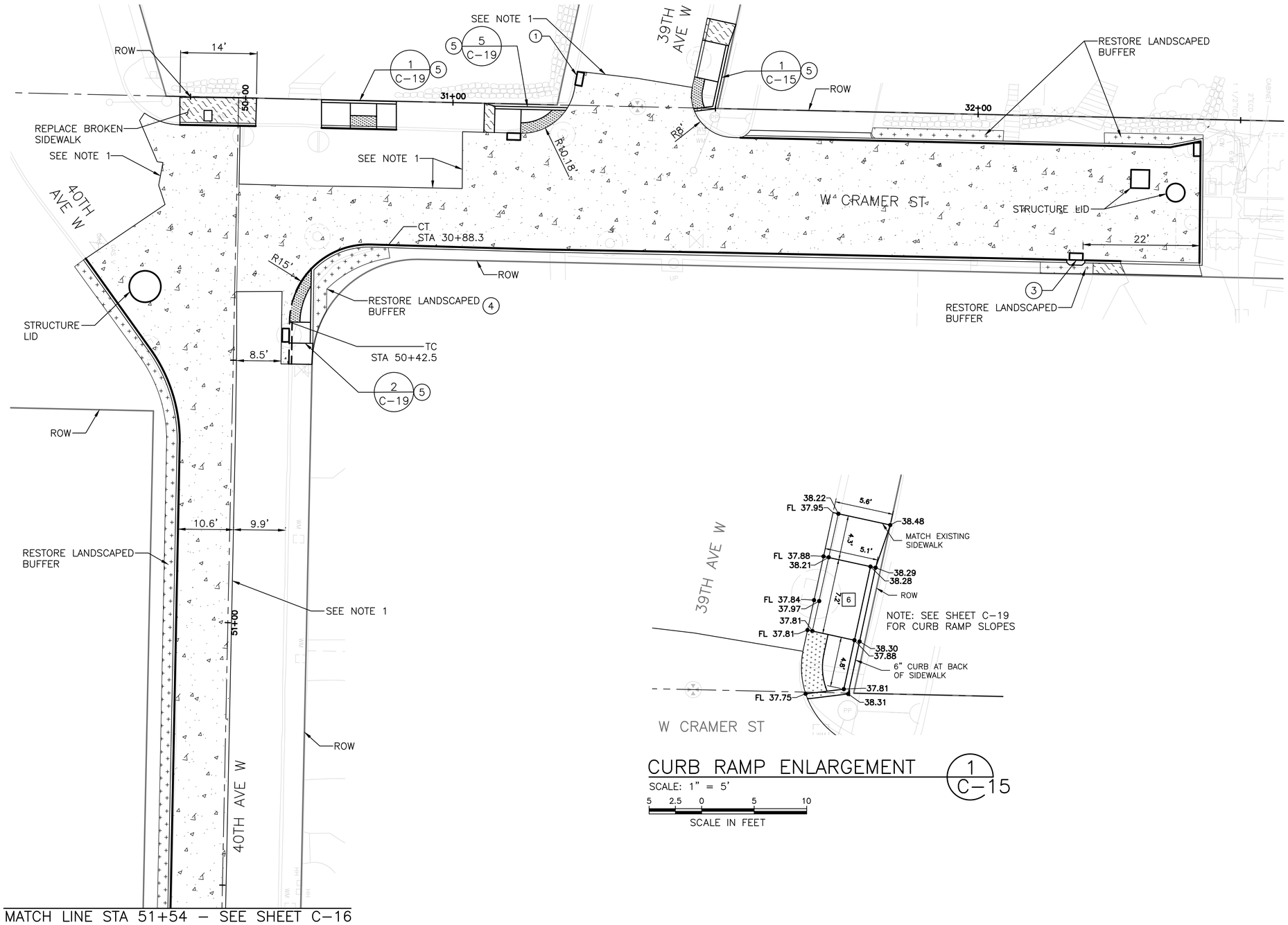

CURB RAMP ENLARGEMENT (1 / C-15)

SCALE: 1" = 5'

5 2.5 0 5 10

SCALE IN FEET

RESTORATION LEGEND:

- ROADWAY, CEMENT CONC, HES (24HR), PER COS STD PLAN 402A
- SIDEWALK, CEMENT CONC PER COS STD PLAN 420
- AMENDED SOIL AND RESTORED LANDSCAPED BUFFER WITH SEEDING
- TRUNCATED DOME TREATMENT, FEDERAL YELLOW
- DRIVEWAY, CEMENT CONC, 8IN, PER COS STD PLAN 430
- CURB, CEMENT CONCRETE TYPE 410B
- CURB, CEMENT CONCRETE TYPE 410C
- TEMPORARY CONSTRUCTION EASEMENT
- TC — TANGENT TO CURVE
- CT — CURVE TO TANGENT

CONSTRUCTION NOTES:

1. REPLACE GRATE WITH TYPE 265 VANED GRATE. EXISTING STRUCTURE TO REMAIN.
3. INSTALL TYPE 250C INLET WITH HOOD, PER STD PLAN 260C.
4. PORTIONS OF LANDSCAPING WHICH ENCROACHES INTO ROW MAY NOT BE RESTORED TO EXISTING CONDITION
5. SEE SDOT–APPROVED RAMP MEF IN SPECIFICATIONS

NOTES:

1. SAW CUT AT PANEL JOINTS. ALL JOINT LOCATION SHOWN ARE APPROXIMATIONS AND CONTRACTOR TO VERIFY IN FIELD. FOR CONCRETE PANEL JOINTING PLANS, FOLLOW COS STD PLAN 405a
2. AMEND SOILS IN LANDSCAPE RESTORATION AREAS FOR GRASS SEEDING PER COS STD PLAN 142 UNLESS OTHERWISE NOTED
3. REMOVE, PROTECT, AND REINSTALL EXISTING SIGNAGE AS DIRECTED BY FIELD ENGINEER. AND/OR SDOT. FINAL SIGN LOCATIONS TO BE AS DIRECTED BY THE SDOT STREET USE INSPECTOR.
4. AIR–SPADING IS REQUIRED ADJACENT TO ALL TREE EXCAVATIONS. REPLACEMENT CURB/SIDEWALK MAY NEED TO BE MODIFIED TO ACCOMMODATE EXISTING TREE ROOTS.
5. PRIVATE PROPERTY ENCROACHMENTS TO BE PERFORMED BY SDOT.
6. CONTRACTOR TO COORDINATE WITH HOMEOWNER TO PROVIDE ACCESS TO RESIDENTIAL DRIVEWAY OR ADA INSTALLATION A MINIMUM OF 72–HOURS IN ADVANCE OF PERFORMING WORK.

N

10 5 0 10 20

SCALE IN FEET

W CRAMER ST
PAVING, CURB AND SIDEWALK RESTORATION PLAN 1
C–15

VAULT SERIAL NO.	DATE	MARK	NATURE REVISIONS	MADE	CHK'D	REV'D
37295						

C:\pw_pl\bjorkma\v0575339\C15 261-1009_P-ROAD.dwg
BJORKMA Dec-19-18 12:07pm

CDM Smith
14432 SE Eastgate Way
Suite 100
Bellevue, WA 98007
Tel: (425) 519-8300

REVIEWED BY SPU/WATER ENGINEERING ..... 20.....
REVIEWED BY SPU/DRAINAGE ..... 20.....
APPROVED BY SDOT STREET IMPROVEMENT PERMITTING ..... 20.....

APPROVED FOR ADVERTISING
LIZ ALZEER
DEPARTMENT OF FINANCE & ADMINISTRATIVE SERVICES
SEATTLE, WASHINGTON . . . . . 20 . . .
BY: . . . . . .
CITY PURCHASING & CONTRACTING SERVICES DIRECTOR

INITIALS AND DATE		INITIALS AND DATE	
DESIGNED	MAB 12/06/2018	REVIEWED: DES:	CONST.
CHECKED	MEH 12/07/2018	SDOT	PROJ. MGR.
DRAWN	JDR 12/10/2018	RECEIVED	
CHECKED	CEB 12/10/2018	REVISED AS BUILT	

ALL WORK SHALL BE DONE IN ACCORDANCE WITH THE CITY OF SEATTLE STANDARD PLANS AND SPECIFICATIONS AND OTHER DOCUMENTS CALLED FOR IN SECTION 0-02.3 OF THE PROJECT MANUAL.

MICHAEL A. BJORK STATE OF WASHINGTON 53703 REGISTERED PROFESSIONAL ENGINEER
4/9/19

Seattle Public Utilities

ORDINANCE NO. 125475 PW NO. 2018-064
FUND: DWF
SCALE: 1"=10'

PUMP STATION NO. 22 RETROFIT AND FORCE MAIN REPLACEMENT

JOB NO. PC C315071 R/W CO

VAULT PLAN NO. 776-474

SHEET 23 OF 71

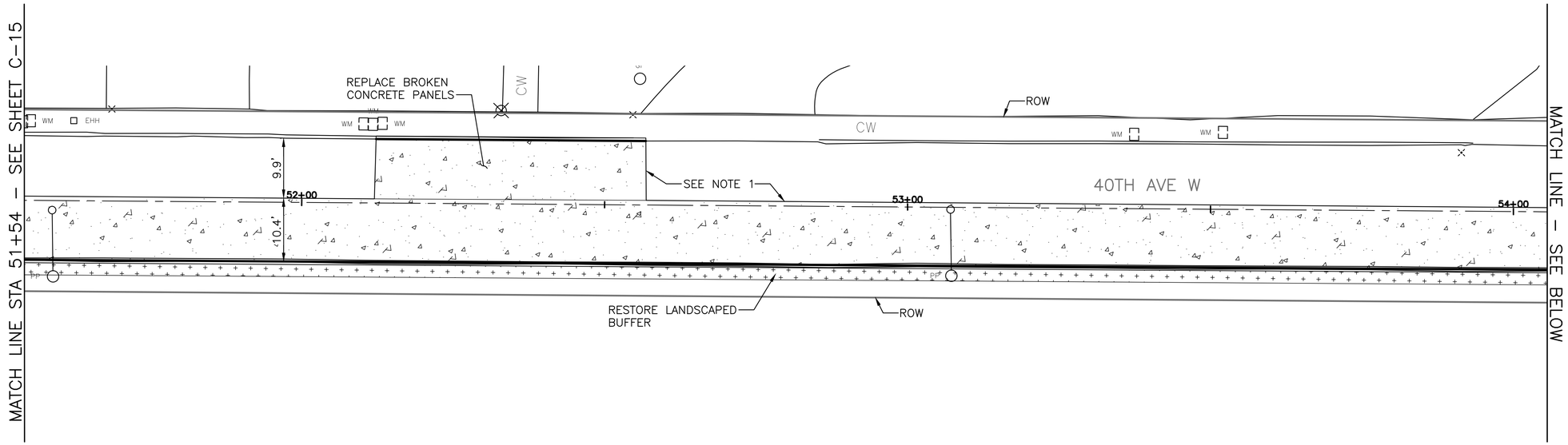

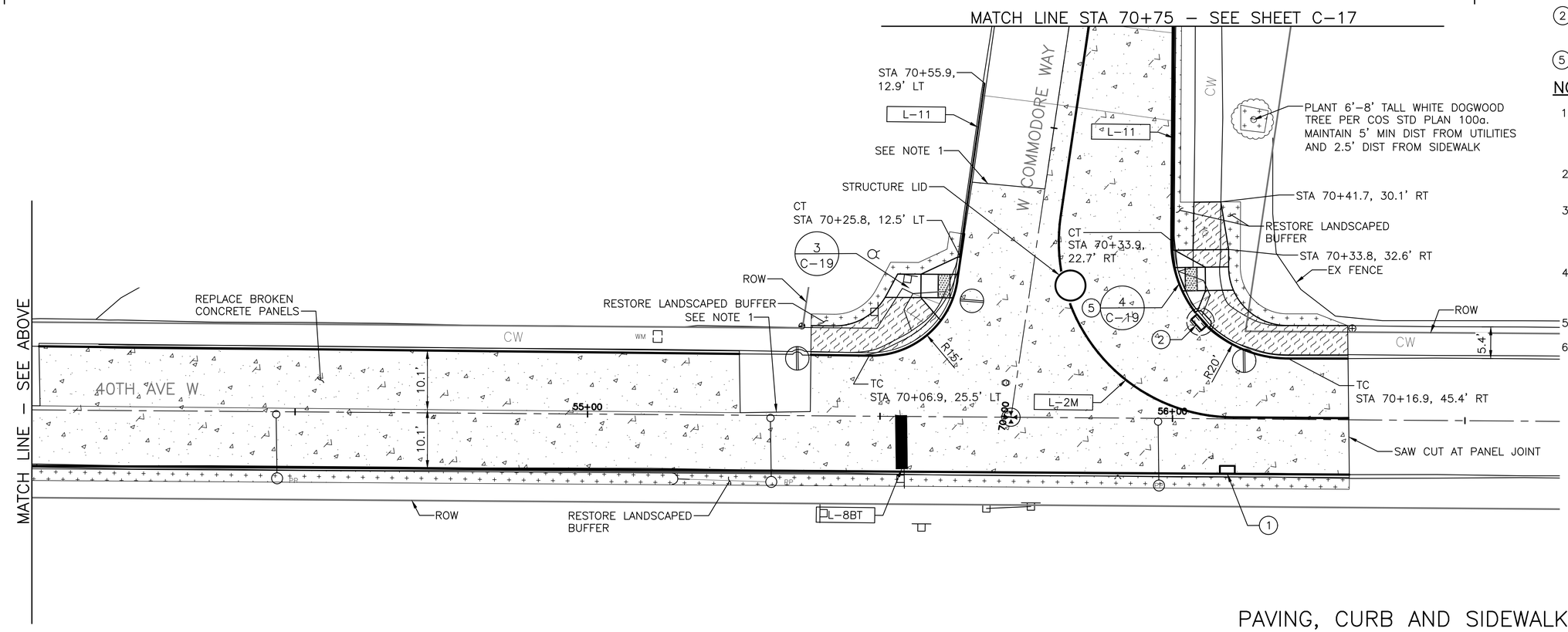

RESTORATION LEGEND:

- ROADWAY, CEMENT CONC, HES (24HR), PER COS STD PLAN 402A
- SIDEWALK, CEMENT CONC PER COS STD PLAN 420
- AMENDED SOIL AND RESTORED LANDSCAPED BUFFER WITH SEEDING
- TRUNCATED DOME TREATMENT, FEDERAL YELLOW
- CURB, CEMENT CONCRETE TYPE 410B
- CURB, CEMENT CONCRETE TYPE 410C
- TEMPORARY CONSTRUCTION EASEMENT
- TC TANGENT TO CURVE
- CT CURVE TO TANGENT

STRIPING NOTES:

L–2M SOLID 4–INCH YELLOW STRIPE, MMA

L–8BT 24–INCH WHITE STRIPE, STOPBAR, THERMOPLASTIC

L–11 6–INCH RED CURB STRIPE

CONSTRUCTION NOTES:

1. REPLACE GRATE WITH TYPE 265 VANED GRATE. EXISTING STRUCTURE TO REMAIN.
2. REPLACE TOP COVER WITH TYPE 240C INLET WITH HOOD, PER STD PLAN 260C. EXISTING STRUCTURE TO REMAIN.
5. SEE SDOT–APPROVED RAMP MEF IN SPECIFICATIONS

NOTES:

1. SAW CUT AT PANEL JOINTS. ALL JOINT LOCATION SHOWN ARE APPROXIMATIONS AND CONTRACTOR TO VERIFY IN FIELD. FOR CONCRETE PANEL JOINTING PLANS, FOLLOW COS STD PLAN 405a
2. AMEND SOILS IN LANDSCAPE RESTORATION AREAS FOR GRASS SEEDING PER COS STD PLAN 142 UNLESS OTHERWISE NOTED
3. REMOVE, PROTECT, AND REINSTALL EXISTING SIGNAGE AS DIRECTED BY FIELD ENGINEER. AND/OR SDOT. FINAL SIGN LOCATIONS TO BE AS DIRECTED BY THE SDOT STREET USE INSPECTOR.
4. AIR–SPADING IS REQUIRED ADJACENT TO ALL TREE EXCAVATIONS. REPLACEMENT CURB/SIDEWALK MAY NEED TO BE MODIFIED TO ACCOMMODATE EXISTING TREE ROOTS.
5. PRIVATE PROPERTY ENCROACHMENTS TO BE PERFORMED BY SDOT.
6. CONTRACTOR TO COORDINATE WITH HOMEOWNER TO PROVIDE ACCESS TO RESIDENTIAL DRIVEWAY OR ADA INSTALLATION A MINIMUM OF 72–HOURS IN ADVANCE OF PERFORMING WORK.

N

10 5 0 10 20

SCALE IN FEET

40TH AVE W

PAVING, CURB AND SIDEWALK RESTORATION PLAN 2

C–16

MARK	DATE	NATURE REVISIONS	MADE	CHK'D	REV'D

VAULT SERIAL NO. 37295

776–474–24

C:\pw_pif\wainwrightmd\d0575339\C16 261–1009_P–ROAD.dwg
Wainwrightmd Feb–08–19 5:03pm

CDM Smith
14432 SE Eastgate Way
Suite 100
Bellevue, WA 98007
Tel: (425) 519-8300

REVIEWED BY SPU/WATER ENGINEERING ..... 20.....

REVIEWED BY SPU/DRAINAGE ..... 20.....

APPROVED BY SDOT STREET IMPROVEMENT PERMITTING ..... 20.....

APPROVED FOR ADVERTISING
LIZ ALZEER
DEPARTMENT OF FINANCE & ADMINISTRATIVE SERVICES
SEATTLE, WASHINGTON . . . . . 20 . . .

BY: . . . . . .
CITY PURCHASING & CONTRACTING SERVICES DIRECTOR

INITIALS AND DATE	
DESIGNED	MAB 12/06/2018
CHECKED	MEH 12/07/2018
DRAWN	JDR 12/10/2018
CHECKED	CEB 12/10/2018

INITIALS AND DATE	
REVIEWED:	
DES.	CONST.
SDOT	PROJ. MGR.
RECEIVED	
REVISED AS BUILT	

ALL WORK SHALL BE DONE IN ACCORDANCE WITH THE CITY OF SEATTLE STANDARD PLANS AND SPECIFICATIONS AND OTHER DOCUMENTS CALLED FOR IN SECTION 0–02.3 OF THE PROJECT MANUAL.

MICHAEL A. BJORK
STATE OF WASHINGTON
53703
REGISTERED PROFESSIONAL ENGINEER
2/8/2019

Seattle Public Utilities

ORDINANCE NO. 125475 PW NO. 2018–064
FUND: DWF
SCALE: 1"=10'

PUMP STATION NO. 22 RETROFIT AND FORCE MAIN REPLACEMENT

JOB NO. PC C315071 R/W CO

VAULT PLAN NO. 776–474

SHEET 24 OF 71

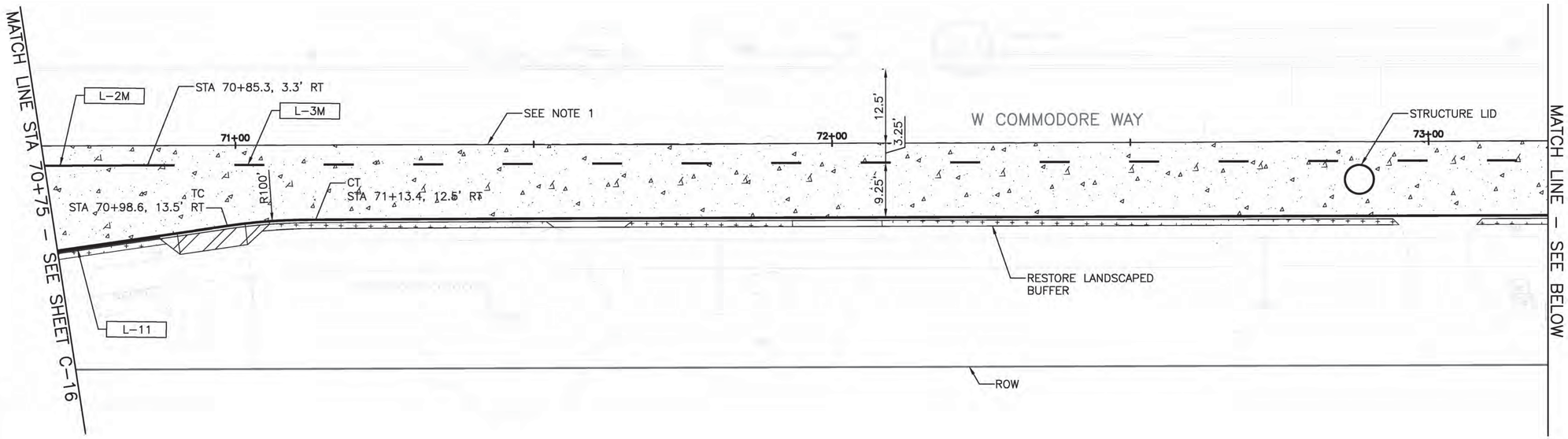

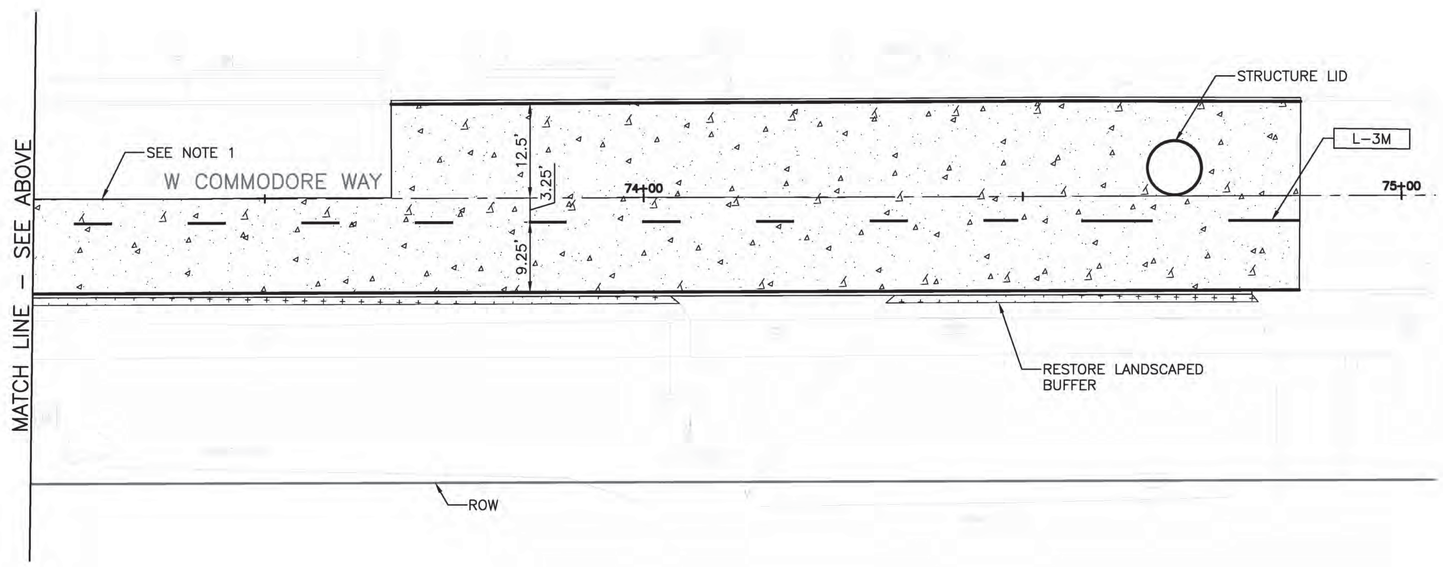

RESTORATION LEGEND:

- ROADWAY, CEMENT CONC, HES (24HR), PER COS STD PLAN 402A
- SIDEWALK, CEMENT CONC PER COS STD PLAN 420
- AMENDED SOIL AND RESTORED LANDSCAPED BUFFER WITH SEEDING
- DRIVEWAY, CEMENT CONC, 8IN, PER COS STD PLAN 430
- CURB, CEMENT CONCRETE TYPE 410B
- CURB, CEMENT CONCRETE TYPE 410C
- TEMPORARY CONSTRUCTION EASEMENT
- TC TANGENT TO CURVE
- CT CURVE TO TANGENT

STRIPING NOTES:

L-2M SOLID 4-INCH YELLOW STRIPE, MMA

L-3M DASHED 4-INCH YELLOW STRIPE (10 FEET PAINT WITH 20 FEET SKIP, MMA

L-11 6-INCH RED CURB STRIPE

NOTES:

1. SAW CUT AT PANEL JOINTS. ALL JOINT LOCATION SHOWN ARE APPROXIMATIONS AND CONTRACTOR TO VERIFY IN FIELD. FOR CONCRETE PANEL JOINTING PLANS, FOLLOW COS STD PLAN 405a
2. AMEND SOILS IN LANDSCAPE RESTORATION AREAS FOR GRASS SEEDING PER COS STD PLAN 142 UNLESS OTHERWISE NOTED
3. REMOVE, PROTECT, AND REINSTALL EXISTING SIGNAGE AS DIRECTED BY FIELD ENGINEER. AND/OR SDOT. FINAL SIGN LOCATIONS TO BE AS DIRECTED BY THE SDOT STREET USE INSPECTOR.
4. AIR-SPADING IS REQUIRED ADJACENT TO ALL TREE EXCAVATIONS. REPLACEMENT CURB/SIDEWALK MAY NEED TO BE MODIFIED TO ACCOMMODATE EXISTING TREE ROOTS.
5. PRIVATE PROPERTY ENCROACHMENTS TO BE PERFORMED BY SDOT.
6. CONTRACTOR TO COORDINATE WITH HOMEOWNER TO PROVIDE ACCESS TO RESIDENTIAL DRIVEWAY OR ADA INSTALLATION A MINIMUM OF 72-HOURS IN ADVANCE OF PERFORMING WORK.

N

10 5 0 10 20
SCALE IN FEET

W COMMODORE WAY
PAVING, CURB AND SIDEWALK RESTORATION PLAN 3
C-17

VAULT SERIAL NO.	DATE	MARK	NATURE REVISIONS	MADE	CHK'D	REV'D
37295						

CDM Smith
14432 SE Eastgate Way
Suite 100
Bellevue, WA 98007
Tel: (425) 519-8300

REVIEWED BY SPU/WATER ENGINEERING ..... 20.....
REVIEWED BY SPU/DRAINAGE ..... 20.....
APPROVED BY SDOT STREET IMPROVEMENT PERMITTING ..... 20.....

APPROVED FOR ADVERTISING
LIZ ALZEER
DEPARTMENT OF FINANCE & ADMINISTRATIVE SERVICES
SEATTLE, WASHINGTON . . . . . 20 . . .
BY: . . . . . .
CITY PURCHASING & CONTRACTING SERVICES DIRECTOR

INITIALS AND DATE		INITIALS AND DATE	
DESIGNED	MAB 12/06/2018	REVIEWED: DES.	CONST.
CHECKED	MEH 12/07/2018	SDOT	PROJ. MGR.
DRAWN	JDR 12/10/2018	RECEIVED	
CHECKED	CEB 12/10/2018	REVISED AS BUILT	

ALL WORK SHALL BE DONE IN ACCORDANCE WITH THE CITY OF SEATTLE STANDARD PLANS AND SPECIFICATIONS AND OTHER DOCUMENTS CALLED FOR IN SECTION 0-02.3 OF THE PROJECT MANUAL.

MICHAEL A. BJORKE STATE OF WASHINGTON 55705 REGISTERED PROFESSIONAL ENGINEER

Seattle Public Utilities
ORDINANCE NO. 125475 PW NO. 2018-064
FUND: DWF
SCALE: 1"=10'

PUMP STATION NO. 22 RETROFIT AND FORCE MAIN REPLACEMENT

JOB NO. PC C315071 R/W CO
VAULT PLAN NO. 776-474
SHEET 25 OF 71

C:\pw_pl1\bjorkmo\d0575339\c17 261-1009_P-ROAD.dwg
BJORKMA Dec-19-18 12:31pm

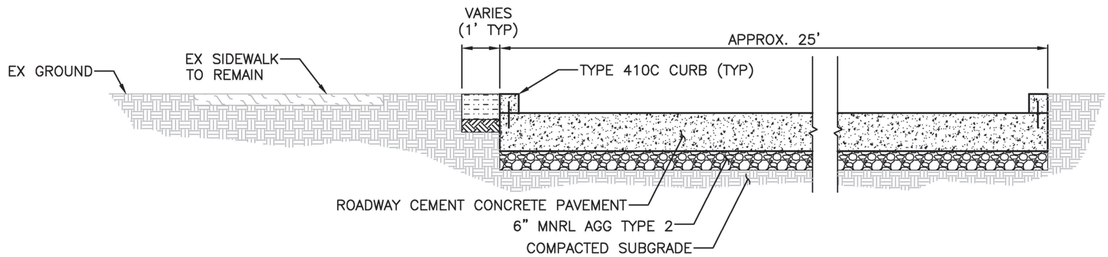

COMMODORE WAY – FULL WIDTH RESTORATION

STA 73+66 TO 74+86

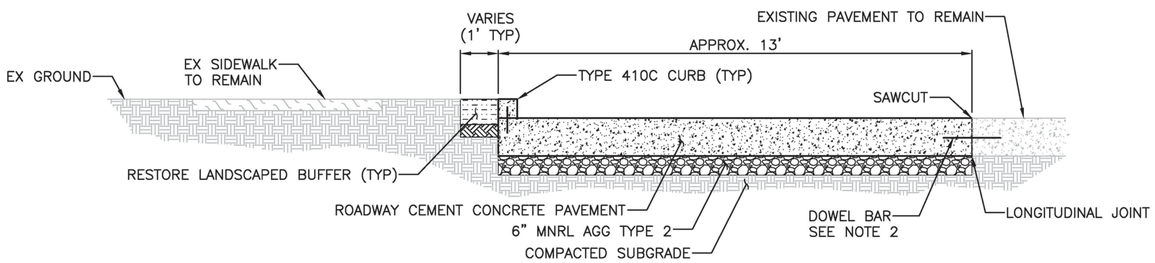

COMMODORE WAY – PARTIAL WIDTH RESTORATION

STA 70+38 TO 73+66

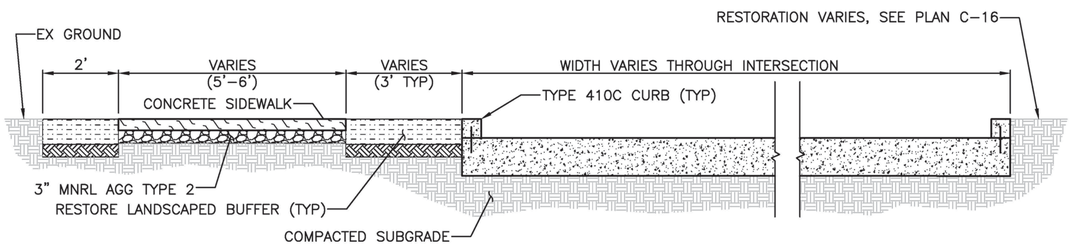

COMMODORE WAY – INTERSECTION VICINITY RESTORATION

STA VARIES

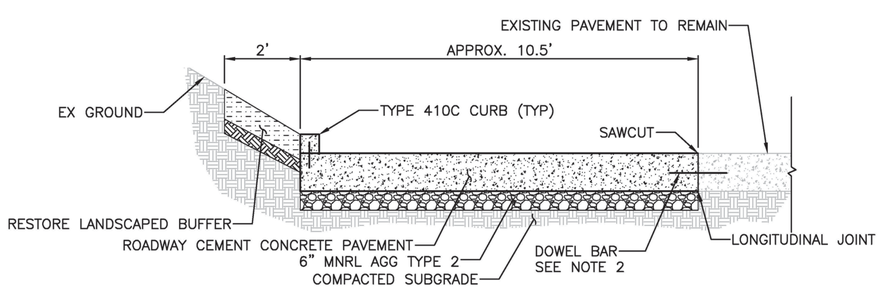

40TH AVE – PARTIAL WIDTH RESTORATION

STA 50+50 TO 52+12, STA 52+56 TO 54+06, STA 55+26 TO 55+38

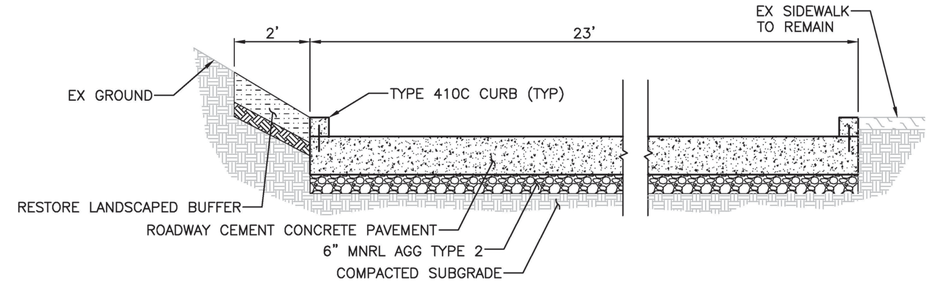

40TH AVE – FULL WIDTH RESTORATION

STA 52+12 TO 52+56, STA 54+06 TO 55+26

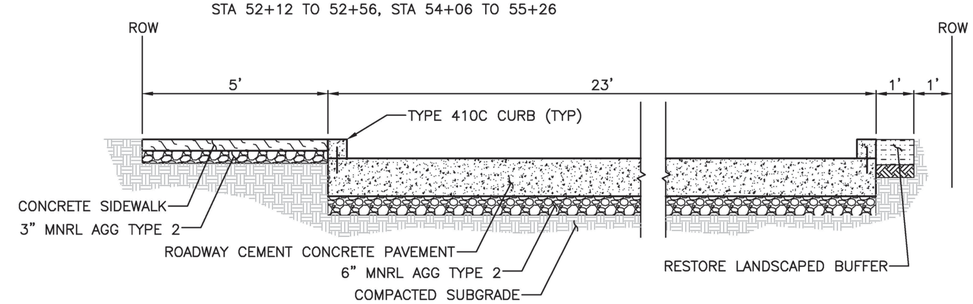

CRAMER ST – FULL WIDTH AND SIDEWALK RESTORATION

STA

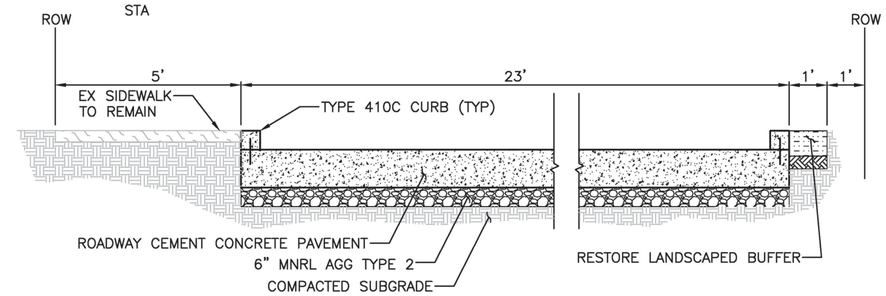

CRAMER ST – FULL WIDTH RESTORATION

WEST OF 39TH AVENUE

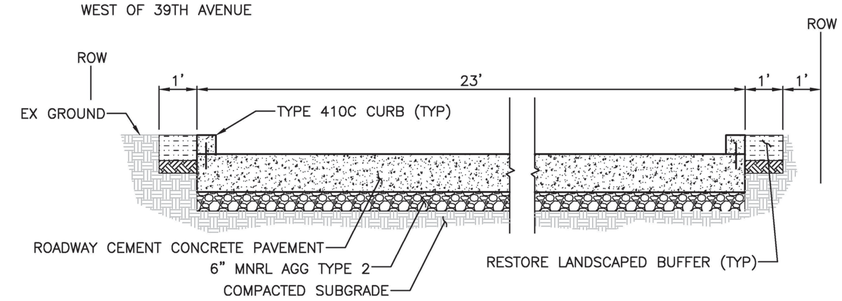

CRAMER ST – FULL WIDTH RESTORATION

EAST OF 39TH AVENUE

NOTES:

1. ALL WORK TO MEET COS STANDARD PLANS
2. FOR CONCRETE PANEL JOINTING, FOLLOW COS STD PLAN 405a
3. AMEND SOILS IN LANDSCAPE RESTORATION AREAS FOR GRASS SEEDING PER STD PLAN 142 UNLESS OTHERWISE NOTED

PAVING DETAILS
C–18

VAULT SERIAL NO.	DATE	MARK	NATURE REVISIONS	MADE	CHK'D	REV'D
37295						

C:\pw_pit\bjorkma\d0575339\C18 261-1009_P-ROAD.dwg
BJORKMA Dec-19-18 12:37pm

CDM Smith
14432 SE Eastgate Way
Suite 100
Bellevue, WA 98007
Tel: (425) 519-8300

REVIEWED BY SPU/WATER ENGINEERING ..... 20.....
REVIEWED BY SPU/DRAINAGE ..... 20.....
APPROVED BY SDOT STREET IMPROVEMENT PERMITTING ..... 20.....

APPROVED FOR ADVERTISING
LIZ ALZEER
DEPARTMENT OF FINANCE & ADMINISTRATIVE SERVICES
SEATTLE, WASHINGTON . . . . . 20 . . .
BY: . . . . . .
CITY PURCHASING & CONTRACTING SERVICES DIRECTOR

INITIALS AND DATE	INITIALS AND DATE
DESIGNED MAB 12/06/2018	REVIEWED: DES. CONST. SDOT PROJ. MGR.
CHECKED MEH 12/07/2018	RECEIVED
DRAWN JDR 12/10/2018	REVISED AS BUILT
CHECKED CEB 12/10/2018	

ALL WORK SHALL BE DONE IN ACCORDANCE WITH THE CITY OF SEATTLE STANDARD PLANS AND SPECIFICATIONS AND OTHER DOCUMENTS CALLED FOR IN SECTION 0-02.3 OF THE PROJECT MANUAL.

MICHAEL A. BJORKMA
STATE OF WASHINGTON
38775
REGISTERED PROFESSIONAL ENGINEER

Seattle Public Utilities
ORDINANCE NO. 125475 PW NO. 2018-064
FUND: DWF
SCALE: 1"=10'

PUMP STATION NO. 22 RETROFIT AND FORCE MAIN REPLACEMENT

JOB NO. PC C315071 R/W CO
VAULT PLAN NO. 776-474
SHEET 26 OF 71

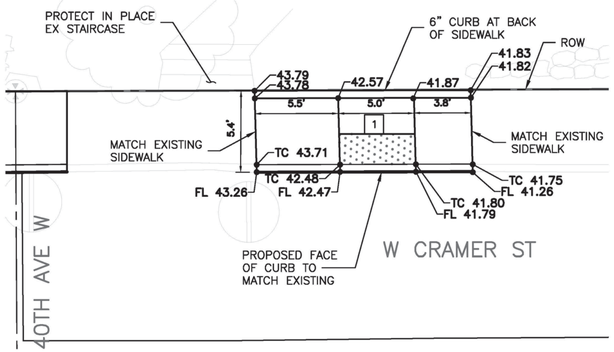

CURB RAMP ENLARGEMENT 1 / C-15

SCALE: 1" = 5'

5 2.5 0 5 10

SCALE IN FEET

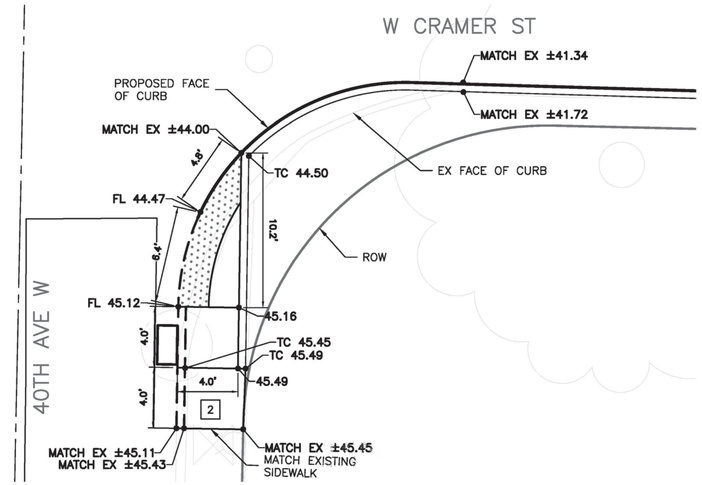

CURB RAMP ENLARGEMENT 2 / C-15

SCALE: 1" = 5'

5 2.5 0 5 10

SCALE IN FEET

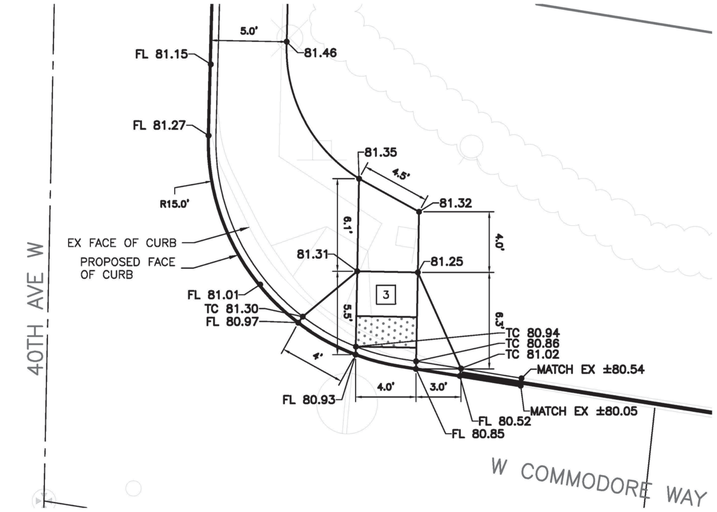

CURB RAMP ENLARGEMENT 3 / C-16

SCALE: 1" = 5'

5 2.5 0 5 10

SCALE IN FEET

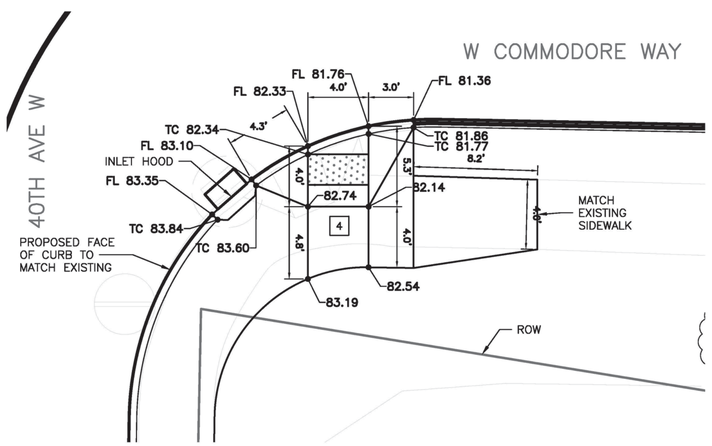

CURB RAMP ENLARGEMENT 4 / C-16

SCALE: 1" = 5'

5 2.5 0 5 10

SCALE IN FEET

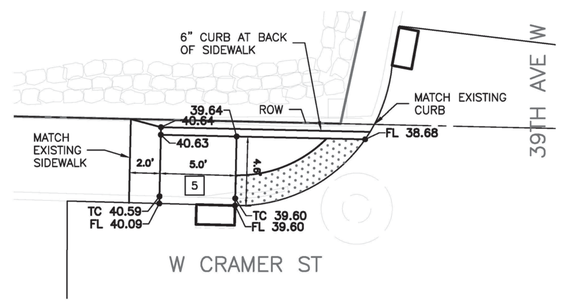

CURB RAMP ENLARGEMENT 5 / C-15

SCALE: 1" = 5'

5 2.5 0 5 10

SCALE IN FEET

NOTES:

1. REMOVE, PROTECT, AND REINSTALL EXISTING SIGNAGE AS DIRECTED BY FIELD ENGINEER. AND/OR SDOT. FINAL SIGN LOCATIONS TO BE AS DIRECTED BY THE SDOT STREET USE INSPECTOR.
2. ALL RAMPS SHALL COMPLY WITH COS STANDARD PLAN 422A, 422D, 422E, AND 422K (2017) UNLESS OTHERWISE NOTED.
3. SEE SPECIFICATIONS FOR SDOT-APPROVED RAMP MEF WHERE APPLICABLE.

CURB RAMP SLOPES

#	S1%	S2%	S3%	S4%	S5%	S6%
1	-14.00%	-14.00%	-	1.50%	-	-
2	1.00%	1.00%	0.45%	-8.19%	0.90%	0.49%
3	-1.95%	-1.50%	-0.66%	7.52%	0.63%	1.72%
4	-13.71%	-14.50%	-15.93%	9.50%	9.84%	9.70%
5	-1.00%	-1.00%	-1.10%	19.85%	-6.22%	-6.22%
6	-1.75%	-1.75%	-4.98%	5.67%	-0.26%	-4.28%

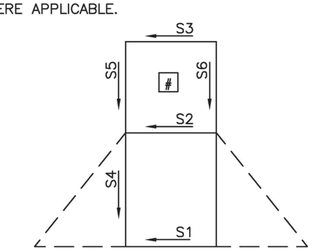

ADA CURB RAMP DETAILS
C-19

VAULT	SERIAL NO.	DATE	MARK	NATURE REVISIONS	MADE	CHK'D	REV'D
	37295						

C:\pw_apl\bjorkma\d0575339\C19 261-1009_P-DETL.dwg
BJORKMA Dec-19-18 12:43pm

CDM Smith
14432 SE Eastgate Way
Suite 100
Bellevue, WA 98007
Tel: (425) 519-8300

REVIEWED BY SPU/WATER ENGINEERING ..... 20.....

REVIEWED BY SPU/DRAINAGE ..... 20.....

APPROVED BY SDOT STREET IMPROVEMENT PERMITTING ..... 20.....

APPROVED FOR ADVERTISING
LIZ ALZEER
DEPARTMENT OF FINANCE & ADMINISTRATIVE SERVICES
SEATTLE, WASHINGTON . . . . . 20 . . .

BY: . . . . . .
CITY PURCHASING & CONTRACTING SERVICES DIRECTOR

INITIALS AND DATE		INITIALS AND DATE	
DESIGNED	MAB 12/06/2018	REVIEWED:	
CHECKED	MEH 12/07/2018	DES.	CONST.
		SDOT	PROJ. MGR.
DRAWN	JDR 12/10/2018	RECEIVED	
CHECKED	CEB 12/10/2018	REVISED AS BUILT	

ALL WORK SHALL BE DONE IN ACCORDANCE WITH THE CITY OF SEATTLE STANDARD PLANS AND SPECIFICATIONS AND OTHER DOCUMENTS CALLED FOR IN SECTION 0-02.3 OF THE PROJECT MANUAL.

MICHAEL A. BJORK
STATE OF WASHINGTON
53705
REGISTERED PROFESSIONAL ENGINEER

Seattle Public Utilities

ORDINANCE NO. 125475 PW NO. 2018-064
FUND: DWF
SCALE: AS NOTED

PUMP STATION NO. 22 RETROFIT AND FORCE MAIN REPLACEMENT

JOB NO. PC C315071 R/W CO

VAULT PLAN NO. 776-474

SHEET 27 OF 71

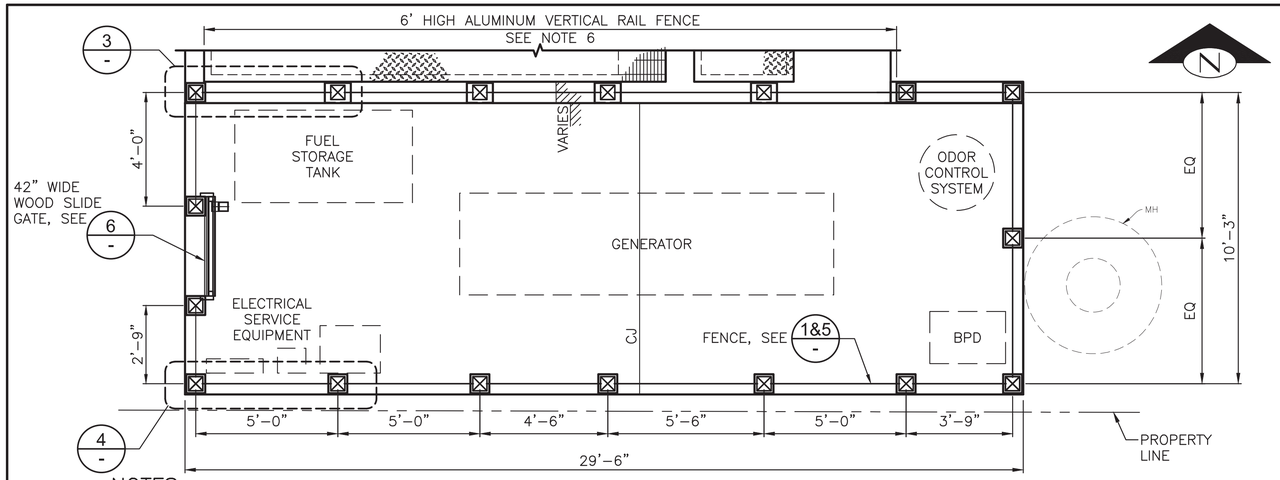

NOTES:

1. FIELD VERIFY DIMENSIONS AND PROVIDE SHOP DRAWINGS OF THE WOOD AND METAL FENCE AND HARDWARE TO ENGINEER FOR REVIEW PRIOR TO FABRICATION.
2. SHOP FABRICATE AND WELD STEEL GATE FRAME AND DRILL ALL BOLT HOLES PRIOR TO APPLICATION OF GALVANIZING.
3. WOOD FENCE IS RED CEDAR: POST AND RAILS #2 OR BETTER GRADE S4S; 1" THICK LUMBER FENCE BOARDS KILN-DRIED #2 OR BETTER S1S2E.
4. ALL BOLTS, WASHERS, NUTS, SCREWS, AND HARDWARE ARE GALV OR STAINLESS STEEL.
5. APPLY MINIMUM OF TWO COATS OF EXTERIOR CLEAR WATERPROOFER WOOD PROTECTOR/SEALER, WHICH RESISTS MILDEW AND UV DAMAGE, MANUFACTURED BY THOMPSON'S WATERSEAL OR EQUAL.
6. COMMERCIAL ALUMINUM VERTICAL RAIL (ESTATE) FENCE 6' HIGH IN STYLE AND COLOR SIMILAR TO THE 42" HIGH METAL RAILING.

2 1 0 2 4
SCALE IN FEET

WOOD FENCE AND SWING GATE PLAN
DETAIL 1
3/8"=1'-0"

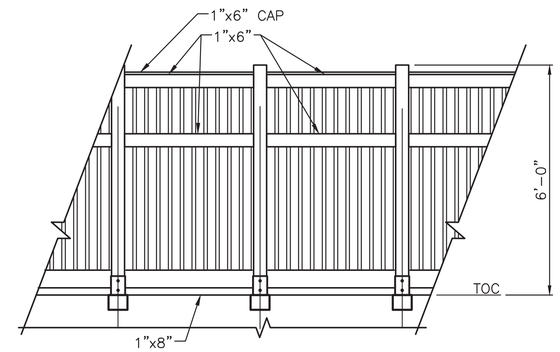

ELEVATION – TYPICAL
DETAIL 2
NTS

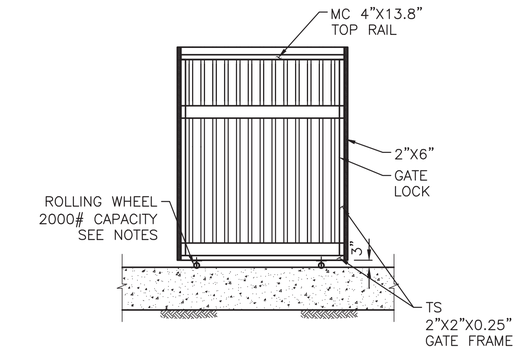

ELEVATION

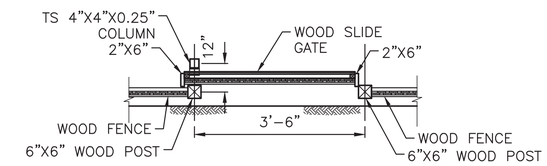

PLAN

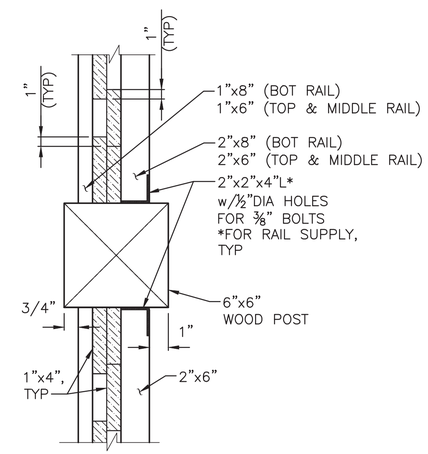

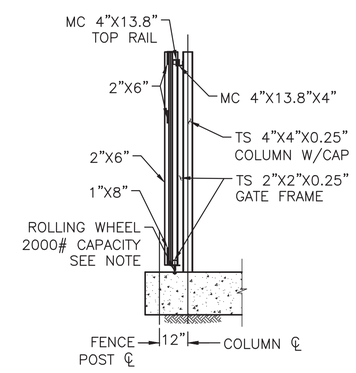

SIDE VIEW

WOOD SLIDE GATE
DETAIL 6
NTS

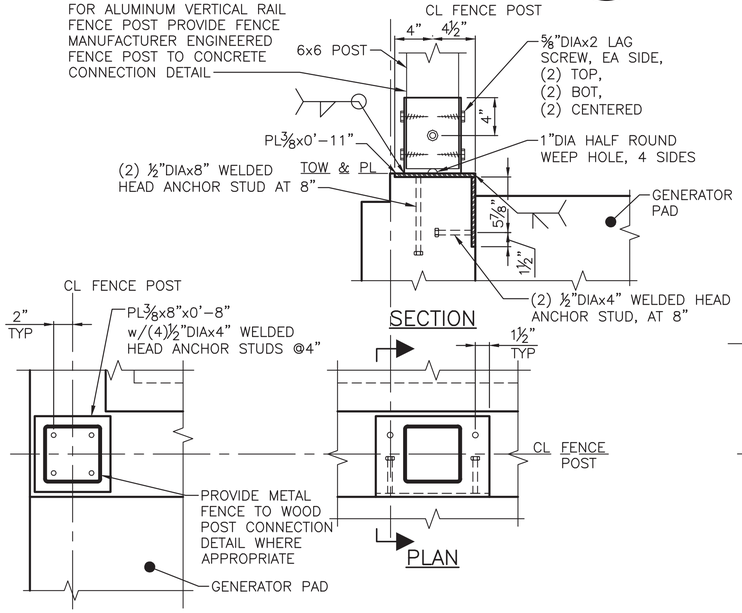

POST TO PLATE CONN
AT PUMP STATION CURB
DETAIL 3
NTS

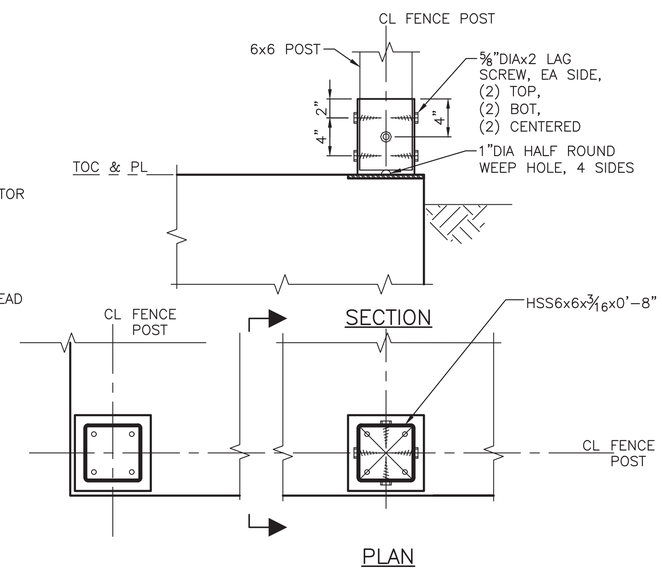

POST TO PLATE CONN, TYP
DETAIL 4
NTS

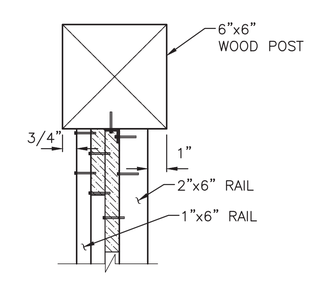

WOOD FENCE
DETAIL 5
NTS

GENERATOR PAD WOOD FENCE
C-20

VAULT SERIAL NO.	DATE	MARK	NATURE REVISIONS	MADE	CHK'D	REV'D
37295						

C:\pw_pl\robinsonjd\d0575339\C20 281-1009_P-DETL.dwg
RobinsonJd Apr-22-19 7:58am

CDM Smith
14432 SE Eastgate Way
Suite 100
Bellevue, WA 98007
Tel: (425) 519-8300

REVIEWED BY SPU/WATER ENGINEERING ..... 20.....
REVIEWED BY SPU/DRAINAGE ..... 20.....
APPROVED BY SDOT STREET IMPROVEMENT PERMITTING ..... 20.....

APPROVED FOR ADVERTISING
LIZ ALZEER
DEPARTMENT OF FINANCE & ADMINISTRATIVE SERVICES
SEATTLE, WASHINGTON . . . . . 20 . . .
BY: . . . . . .
CITY PURCHASING & CONTRACTING SERVICES DIRECTOR

INITIALS AND DATE		INITIALS AND DATE	
DESIGNED JNC 12/06/2018		REVIEWED:	
CHECKED AG & AB 12/07/2018		DES:	CONST.
		SDOT	PROJ. MGR.
DRAWN JDR 12/10/2018		RECEIVED	
CHECKED CEB 12/10/2018		REVISED AS BUILT	

ALL WORK SHALL BE DONE IN ACCORDANCE WITH THE CITY OF SEATTLE STANDARD PLANS AND SPECIFICATIONS AND OTHER DOCUMENTS CALLED FOR IN SECTION 0-02.3 OF THE PROJECT MANUAL.

JOHN N CRIPPEN
STATE OF WASHINGTON
41561
REGISTERED PROFESSIONAL ENGINEER
2019.04.22 20:21:03'00'

Seattle Public Utilities
ORDINANCE NO. 125475 PW NO. 2018-064
FUND: DWF
SCALE: AS NOTED

PUMP STATION NO. 22 RETROFIT AND FORCE MAIN REPLACEMENT

JOB NO. PC C315071 R/W CO
VAULT PLAN NO. 776-474
SHEET 28 OF 71

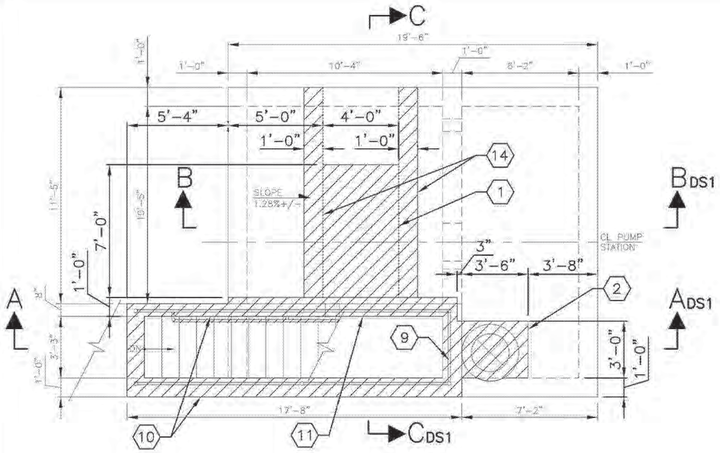

ROOF PLAN

1/4" = 1'-0"

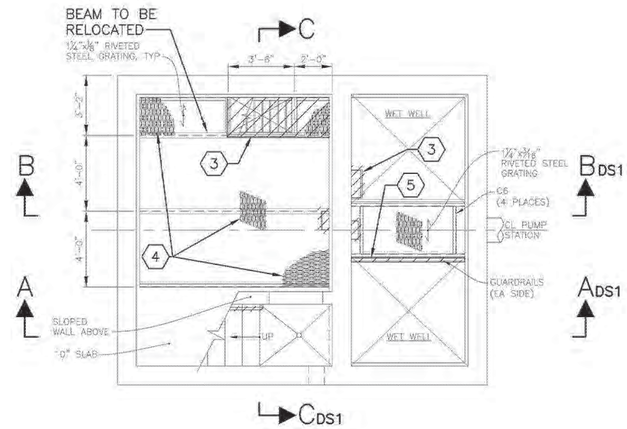

CONTROL ROOM PLAN

1/4" = 1'-0"

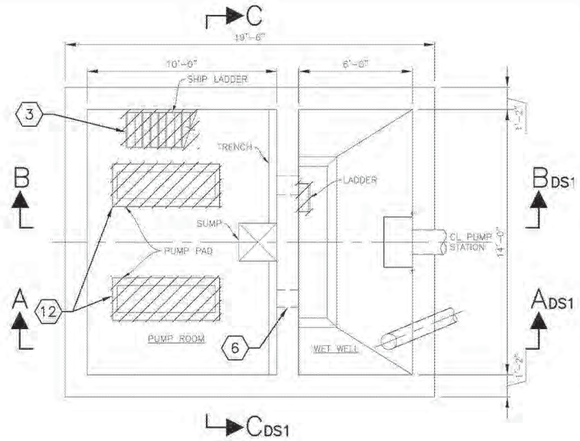

SUMP/PUMP ROOM PLAN

1/4" = 1'-0"

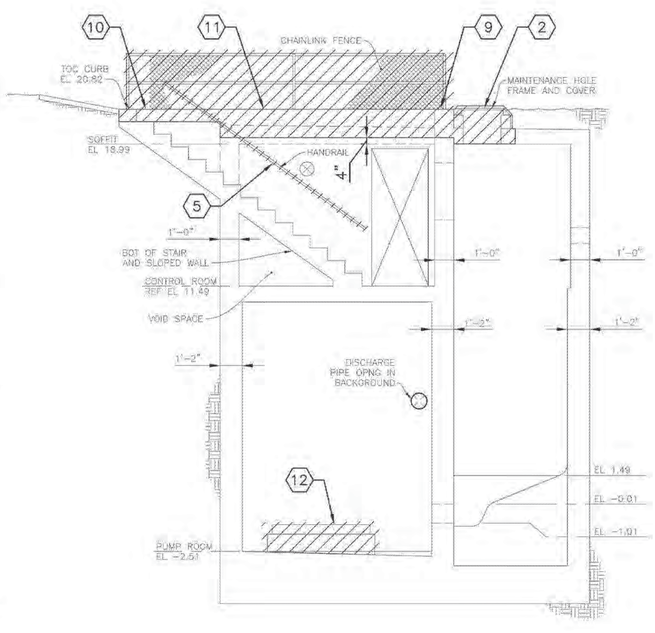

SECTION A–A DS1

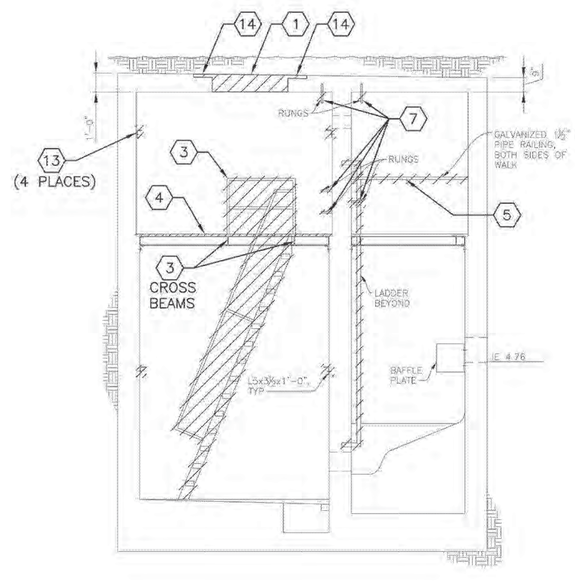

SECTION B–B DS1

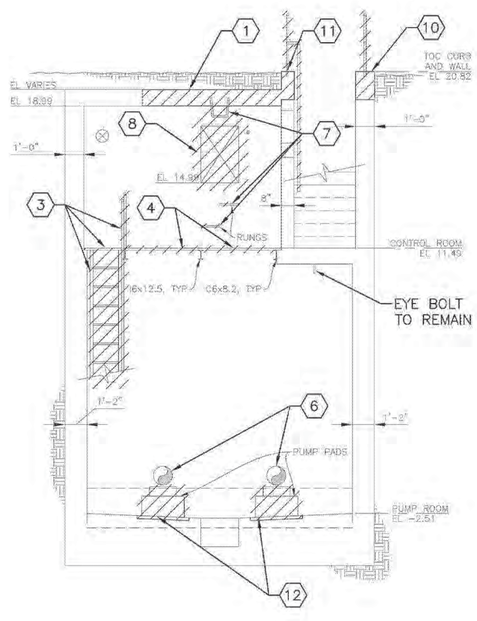

SECTION C–C DS1

KEY NOTES:

1. SHORE EXISTING CONCRETE SLAB ALONG 7'–0" LONG EDGES PRIOR TO CUTTING SLAB. SHORING OF SLAB IS TO REMAIN UNTIL NEW ROOF BEAMS ARE IN PLACE AND THE CONCRETE REACHES ITS DESIGN STRENGTH OF f'_c=4,000 PSI. 8" CONC WALL UNDERNEATH 8" CURB SHALL NOT BE USED FOR SHORING SUPPORT.
2. SAW CUT CONCRETE SLAB, REMOVE RISER, MAINTENANCE HOLE FRAME AND COVER.
3. REMOVE WET WELL LADDER, STEEL SHIP LADDER AND HANDRAILS. REMOVE STEEL CROSS BEAMS FRAMING THE OPENING INCLUDING WALL SUPPORTS.
4. REMOVE ALL STEEL GRATING IN CONTROL ROOM. EMBEDDED WALL SUPPORT FRAMING TO REMAIN.
5. REMOVE SINGLE HANDRAIL. IN WET WELL, REMOVE GUARDRAIL AT SOUTH SIDE OF WALKWAY.
6. CUT FLANGE OF 12" DIA CAST IRON PIPE AND CORE DRILL 18" DIA HOLE TO REMOVE EMBEDDED PIPE STUB.
7. CUT EXISTING RUNGS FLUSH WITH SURFACE OF CONCRETE WALL.
8. SAW CUT CONCRETE WALL AND REMOVE WATERTIGHT DOOR, INCLUDING ATTACHMENTS.
9. REMOVE 12" WIDE CURB DOWN TO ELEVATION 19.32. SALVAGE CURB VERTICAL REINFORCING STEEL.
10. REMOVE 8" WIDE CURB WEST OF THE STATION WEST WALL TO ELEVATION 20.16, SALVAGE CURB VERTICAL REINFORCING STEEL.

    REMOVE 12" WALL SOUTH OF THE STAIRCASE DOWN TO EL 19.32 AND BEYOND THE STATION WEST WALL DOWN TO EL 20.16.
11. REMOVE 8" WIDE CURB AND SLAB ALONG CURB 4" WIDE DOWN TO ELEVATION 19.32, SALVAGE CURB VERTICAL REINFORCING STEEL FOR INCORPORATION IN NEW CONCRETE PLACEMENT.
12. REMOVE PUMP PADS AND CHIP OUT UNDERLYING SLAB, INCLUDING FOOT PRINTS OF NEW PUMP PADS, DOWN TO 1" BELOW EXISTING FLOOR LEVEL. PATCH SURFACE OUTSIDE NEW PUMP PADS WITH NON–SHRINK SELF LEVELING CEMENTIOUS GROUT, TROWEL TO FINISH.
13. REMOVE STEEL ANGLES AND CUT CONNECTING BOLTS FLUSH WITH CONCRETE WALL SURFACE.
14. CHIP OUT TOP OF CONCRETE SLAB 2" DEEP.

NOTES:

1. RECORD DRAWINGS HAVE BEEN USED FOR BACKGROUNDS AND DIMENSIONS OF EXISTING STRUCTURES. THESE RECORD DRAWINGS SHOW THE LATEST INFORMATION AVAILABLE. VERIFY ALL DIMENSIONS PRIOR TO CONSTRUCTION OF NEW FACILITIES.
2. FILL ALL ABANDONED OR UNUSED OPENINGS.
3. IN THE WET WELL, DRILL OUT ALL CUT AND EXPOSED BOLTS AND REINFORCING BARS ½" DEEP. FILL HOLE WITH EPOXY GROUT. IN THE DRY WELL, COAT ALL CUT AND EXPOSED BOLTS OR RODS WITH EPOXY PAINT.

4 2 0 4 8

SCALE IN FEET

STRUCTURAL DEMOLITION PLANS AND SECTIONS

DS1

VAULT SERIAL NO.	DATE	MARK	NATURE REVISIONS	MADE	CHK'D	REV'D

T:\242 Series – CDM Smith\242.01 PS 22 Retrofit & Force Main Replacement (Magnolia 60 CSO)\Drawings\Structural\DS1 261-1009_ STRUCT DRE.dwg
casotillo Dec-18-18 11:35am

000-000-0

CDM Smith
14432 SE Eastgate Way
Suite 100
Bellevue, WA 98007
Tel: (425) 519-8300

IN ASSOCIATION WITH
BRIGHT ENGINEERING, INC
Consulting Structural & Civil Engineering
1809 7th Avenue, Suite 1100 Seattle WA 98101
206-625-3777 Fax 206-625-1851

REVIEWED BY SPU/WATER ENGINEERING ..... 20....

REVIEWED BY SPU/DRAINAGE ..... 20....

APPROVED BY SDOT STREET IMPROVEMENT PERMITTING ..... 20....

APPROVED FOR ADVERTISING
LIZ ALZEER
DEPARTMENT OF FINANCE & ADMINISTRATIVE SERVICES
SEATTLE, WASHINGTON 20

BY: .....
CITY PURCHASING & CONTRACTING SERVICES DIRECTOR

INITIALS AND DATE	INITIALS AND DATE
DESIGNED II 12/06/2018	REVIEWED: DES. CONST. SDOT PROJ. MGR.
CHECKED AB 12/07/2018	
DRAWN KF 12/06/2018	RECEIVED
CHECKED AB 12/07/2018	REVISED AS BUILT

ALL WORK SHALL BE DONE IN ACCORDANCE WITH THE CITY OF SEATTLE STANDARD PLANS AND SPECIFICATIONS AND OTHER DOCUMENTS CALLED FOR IN SECTION 0-02.3 OF THE PROJECT MANUAL.

STATE OF WASHINGTON 12/10/2018 19813 STRUCTURAL ENGINEER PROFESSIONAL ENGINEER

Seattle Public Utilities

ORDINANCE NO. 125475 PW NO. 2018-064
FUND: DWF
SCALE: 1/4" = 1'-0"

PUMP STATION NO. 22 RETROFIT AND FORCE MAIN REPLACEMENT

JOB NO. PC C315071 R/W CO

VAULT PLAN NO. 776-474

SHEET 29 OF 71

GENERAL STRUCTURAL NOTES

UNLESS OTHERWISE NOTED

DESIGN CRITERIA

APPLICABLE BUILDING NOTES AND CODES

SEATTLE BUILDING CODE, SBC 2015 EDITION, EXCEPT WHERE OTHER CODES ARE MORE RESTRICTIVE.

LIVE LOADS

FLOOR AREAS

STAIR.....100 psf
(OR 250 LBS CONCENTRATED LOAD)

ROOF.....100 psf

CONTROL ROOM FLOOR..... 100 psf
OR WEIGHT OF EQUIPMENT

SUMP/PUMP ROOM FLOOR..... 250 psf
(OR ACTUAL EQUIPMENT WEIGHT + 50 psf)

FLOW METER VAULT AND
EMERGENCY BYPASS CONNECTION VAULT.....HS-25 TRUCK WHEEL LOAD

GRATING, HATCHES AND FLOOR PLATES SAME LOADING AS ADJACENT FLOOR OR ROOF AREAS.

CONCRETE

ALL DETAILING, FABRICATION AND ERECTION OF REINFORCING BARS, UNLESS OTHERWISE NOTED, SHALL BE IN ACCORDANCE WITH MANUAL OF STANDARD PRACTICE FOR DETAILING REINFORCED CONCRETE STRUCTURES ACI 315, LATEST EDITION. CONCRETE CONSTRUCTION SHALL CONFORM TO ACI 318 BUILDING CODE AND ACI 350 LATEST EDITIONS.

DESIGN STRENGTH

CAST-IN-PLACE CONCRETE, UNLESS OTHERWISE NOTED

f'c = 4000 psi AT 28 DAYS

f'c = 3000 psi (ASSUMED FOR EXISTING CONCRETE)

REINFORCING STEEL SHALL BE IN ACCORDANCE WITH ASTM A615, GRADE 60.

WELDED REINFORCING STEEL SHALL BE IN ACCORDANCE WITH ASTM A706, GRADE 60.

EXISTING REINFORCING STEEL IS ASSUMED AS GRADE 40

CONCRETE COVER

CONCRETE COVER FOR REINFORCING BARS SHALL BE AS FOLLOWS, BUT NOT BE LESS THAN ONE BAR DIAMETER.

CONCRETE IN CONTACT WITH SOIL, WEATHER OR SEWERAGE .....2"

CONCRETE NOT EXPOSED TO SOIL, WEATHER OR SEWERAGE .....1½"

EXTRA ACCESSORY BARS

RIGIDLY SUPPORT BARS ON CONCRETE BLOCK OR APPROVED ACCESSORIES.

IN ADDITION, PROVIDE #5 RAISER BARS AT 36" ON CENTERS MAXIMUM TO SUPPORT TOP REINFORCING STEEL IN SLABS.

BAR SPLICES

LAP REINFORCING STEEL BAR AS SHOWN ON PLANS. BAR SPLICES MAY ALSO BE MADE BY WELDING IN ACCORDANCE WITH THE DETAILS FOR REINFORCING STEEL SPLICE AND WITH AWS SPECIFICATION D1.4 WELDING CODE.

DRILLED-IN CONCRETE ANCHOR (DICA)

DRILLED-IN EXPANSION BOLTS SHALL BE "KWIK BOLT TYPE TZ" STAINLESS STEEL BY HILTI CORP., OR APPROVED EQUAL. ICC CERTIFICATION AND SPECIAL INSPECTION IS REQUIRED.

ADHESIVE ANCHORING SYSTEM RODS SHALL BE ASTM A36, GALVANIZED STEEL RODS. REINFORCING BARS AND RODS ANCHORED INTO EXISTING CONCRETE SHALL BE IN DRILLED HOLE WITH HILTI "HIT-RE 500 V3", OR SIKA "SIKADUR" EPOXY INJECTION GEL OR APPROVED EQUAL. ICC CERTIFICATION AND SPECIAL INSPECTION IS REQUIRED.

BOLTS, RODS, AND BARS USED IN WET WELL SHALL BE STAINLESS STEEL, TYPE AISI 304.

STEEL

MATERIAL

ALL STRUCTURAL STEEL SHALL CONFORM TO THE FOLLOWING ASTM DESIGNATIONS UNLESS NOTED OTHERWISE ON THE DRAWINGS:

W AND S SHAPES	ASTM A992 OR ASTM A572, GRADE 50
TEES, CHANNELS, ANGLES, PLATES AND BARS	A36, UNLESS OTHERWISE NOTED
HOLLOW STRUCTURAL SECTIONS(HSS):	
SQUARE AND RECTANGULAR HSS	ASTM A500, GRADE B, FY=46 KSI
ROUND HSS	ASTM A500, GRADE B, FY=42 KSI
PIPES	ASTM A53, GRADE B, FY=35 KSI
EXISTING STEEL	ASTM A9, FY=33 KSI (ASSUMED)

MINIMUM CONNECTION SHALL BE A TWO-BOLTS CONNECTION USING ¾" DIAMETER HIGH STRENGTH BOLTS ASTM DESIGNATION A325SC UNLESS NOTED OTHERWISE. ALL ⅞" DIAMETER HIGH STRENGTH BOLTS SHALL CONFORM TO ASTM A325X AND ALL 1" DIAMETER HIGH STRENGTH BOLTS SHALL CONFORM TO ASTM A490X. ERECTION BOLTS SHALL BE NON-SLIP CRITICAL.

ALL HIGH STRENGTH BOLTS SHALL BE INSTALLED, TIGHTENED AND INSPECTED IN ACCORDANCE WITH AISC SPECIFICATIONS FOR STRUCTURAL JOINTS USING ASTM A325 OR A490 BOLTS. THE CRITERIA FOR SLIP-CRITICAL (SC) CONNECTION SHALL APPLY TO ALL CONNECTIONS UNLESS NOTED OTHERWISE. SLIP-CRITICAL CONNECTION SHALL USE LOAD INDICATOR WASHERS OR TENSION CONTROL BOLTS INSTALLED PER MANUFACTURER'S INSTRUCTIONS OR BY TURN-OF-THE-NUT METHOD.. ALL HOLES SHALL BE STANDARD SIZE UNLESS NOTED OTHERWISE.

HEADED SHEAR STUDS (HAS) SHALL BE "NELSON STUDS", DEFORMED BAR ANCHOR (DBA) SHALL BE AS MANUFACTURED BY STUD WELDING ASSOCIATES, INC., OR APPROVED EQUAL

MACHINE BOLTS SHALL BE ASTM A307 AND SHALL BE PROVIDED WITH LOCK NUT WASHERS UNDER NUTS OR SELF LOCKING NUTS.

WELDING

ALL WELDING SHALL CONFORM TO AWS D1.1 WELDING CODE. MINIMUM SIZE WELDS 3/16" CONTINUOUS FILLET. WELDING ELECTRODES SHALL BE 70XX SERIES CONFORMING TO ANSI/AWS D1.1 TABLE 3.1 AND ELECTRODE SPECIFICATION AWS A5. WELDING SHALL BE CONDUCTED BY WABO CERTIFIED WELDER.

THE WELDING SHALL BE MADE WITH FILLER METAL PRODUCING WELDS WITH A MINIMUM CHARPY V-NOTCH TOUGHNESS OF 20 FT-LBF AT MINUS 40 DEGREES-F.

PAINTING AND GALVANIZING:

STRUCTURAL STEEL IN DRY WELL SHALL BE PAINTED AND STRUCTURAL STEEL IN WET WELL SHALL BE GALVANIZED IN CONFORMANCE WITH SPECIFICATION.

MISCELLANEOUS

VERIFY ALL DIMENSIONS AT THE PROJECT SITE PRIOR TO STARTING WORK AND NOTIFY THE ENGINEER IMMEDIATELY OF ANY DISCREPANCIES.

STRUCTURAL SYSTEM HAS BEEN DESIGNED FOR OPERATIONAL LOADS ON THE COMPLETED STRUCTURE. PROVIDE TEMPORARY ERECTION BRACING AND SHORING AS REQUIRED FOR STABILITY OF THE STRUCTURE AND ADJACENT STRUCTURES, DURING ALL PHASES OF CONSTRUCTION.

REFER TO SPECIFICATIONS FOR INFORMATION NOT CONTAINED IN THESE GENERAL NOTES.

SPECIAL INSPECTION

SPECIAL INSPECTION

SPECIAL INSPECTION SHALL BE PERFORMED BASED ON THE REQUIREMENTS OF THE 2015 SBC CHAPTER 17 – AS SUMMARIZED IN THE TABLE BELOW. BE RESPONSIBLE TO PROVIDE SUFFICIENT NOTICE AND ACCESS FOR THE SPECIAL INSPECTOR TO PERFORM THESE INSPECTIONS.

SPECIAL INSPECTION PROGRAM(1)

ESTABLISHED PER 2015 SBC SECTION 110 AND CHAPTER 17

	ITEM	CONTINUOUS (3)	PERIODIC (3)	CODE OR STANDARD REFERENCE	COMMENTS
CONCRETE					
	REINFORCING PLACEMENT		X	ACI 318 1.3.2, ACI 318 3.5, ACI 318 7.1-7.7	
	ANCHOR BOLTS AND INSERTS		X	ACI 318 D.9.2	ALL ANCHORS SHALL BE VISUALLY INSPECTED
	MATERIAL VERIFICATION		X	ACI 318 5.2-5.4	
	PREPARATION OF TEST SPECIMENTS	X		ACI 318 5.6, 5.8	
	CONCRETE PLACEMENT	X		ACI 318 5.9-5.10	
	EPOXY ANCHOR PLACEMENT	X		ACI 318 D.9.2	ALL ANCHORS SHALL BE VISUALLY INSPECTED
	EXPANSION ANCHOR PLACEMENT	X		ACI 318 D.9.2	ALL ANCHORS SHALL BE VISUALLY INSPECTED
	CURING		X	ACI 318 5.11-5.13	
STRUCTURAL STEEL					
	HIGH STRENGTHENING BOLTING		X	AISC 360 TABLE N5.6-1	
	WELDING OF ANCHORS AND STUDS		X	AISC 360 TABLE N6.1	
	EMBEDDED PLATES		X	AISC 360 TABLE 5.4-1	
FIELD WELDING					
	SINGLE PASS FILLET WELDS < 5/16"		X	AISC 360 TABLE N5.4-1 TO N5.4-3	REF NOTE (4)
	FILLET WELDS > 5/16"	X		AISC 360 TABLE N5.4-1 TO N5.4-3	REF NOTE (4)
	PARTIAL/COMPLETE PENETRATION	X		AISC 360 TABLE N5.4-1 TO N5.4-3	REF NOTE (5)

NOTES:

1. THE ITEMS CHECKED WITH AN "X" SHALL BE INSPECTED IN ACCORDANCE WITH 2015-SBC CHAPTER 17 BY THE RESIDENT ENGINEER OR A CERTIFIED SPECIAL INSPECTOR FROM AN ESTABLISHED TESTING AGENCY. FOR MATERIAL SAMPLING AND TESTING REQUIREMENTS, REFER TO THE SPECIFICATIONS AND THE SPECIFIC GENERAL NOTES SECTIONS. THE TESTING AGENCY SHALL SEND COPIES OF ALL STRUCTURAL TESTING AND INSPECTION REPORTS DIRECTLY TO THE RESIDENT ENGINEER. ALL MATERIALS THAT FAIL TO MEET THE CONTRACT SPECIFICATIONS SHALL IMMEDIATELY BE BROUGHT TO THE ATTENTION OF THE RESIDENT ENGINEER. SPECIAL INSPECTION TESTING REQUIREMENTS APPLY EQUALLY TO ALL CONTRACTOR DESIGNED COMPONENTS.
2. CONTINUOUS INSPECTION REQUIRED WHERE 1704.2.5 APPLIES.
3. CONTINUOUS SPECIAL INSPECTION MEANS THAT THE SPECIAL INSPECTOR IS ON THE SITE AT ALL TIMES OBSERVING THE WORK REQUIRING SPECIAL INSPECTION (SBC SECTION 1705). PERIODIC SPECIAL INSPECTION MEANS THAT THE SPECIAL INSPECTOR IS ON SITE AT TIME INTERVALS NECESSARY TO CONFIRM THAT ALL WORK REQUIRING SPECIAL INSPECTION IS IN COMPLIANCE.
4. ALL WELDS SHALL BE VISUALLY INSPECTED.
5. ALL COMPLETE PENETRATION WELDS SHALL BE TESTED ULTRASONICALLY OR BY USE OF A COMPARABLE APPROVED METHOD.
6. INSPECTION FOR PREFABRICATED CONSTRUCTION SHALL BE THE SAME AS IF THE MATERIAL USED IN THE CONSTRUCTION TOOK PLACE ON SITE. CONTINUOUS INSPECTION WILL NOT BE REQUIRED DURING PREFABRICATION IF THE APPROVED AGENCY CERTIFIES THE CONSTRUCTION AND FURNISHES EVIDENCE OF COMPLIANCE.

ABBREVIATIONS

@	AT
AB	ANCHOR BOLT
AL, ALUM	ALUMINUM
BOT	BOTTOM
BTWN	BETWEEN
CIP	CAST-IN-PLACE
CJ	CONSTRUCTION JOINT
CL	CENTER LINE
CLR	CLEAR
CONC	CONCRETE
CONN	CONNECTION
CONT	CONTINUOUS
CP	COMPLETE PENETRATION
DIA	DIAMETER
DICA	DRILLED IN CONCRETE ANCHOR
DWG	DRAWING
EA	EACH
EF	EACH FACE
EJ	EXPANSION JOINT
EL	ELEVATION
ELEC	ELECTRICAL
ES	EACH SIDE
EW	EACH WAY
EXIST	EXISTING
EXP	EXPANSION
FDN	FOUNDATION
FF	FAR FACE OR FINISHED FLOOR
FIN	FINISHED
FLR	FLOOR
FT	FEET OR FOOT
FTG	FOOTING
GA	GAUGE, GAGE
GALV	GALVANIZED
HORIZ	HORIZONTAL
ID	INSIDE DIAMETER
IE	INVERT ELEVATION
IF	INSIDE FACE
IN	INCH
INFO	INFORMATION
JT	JOINT
KSI	KIPS PER SQUARE INCH
L	LENGTH OR ANGLE
LB	POUND
LLBB	LONG LEG BACK TO BACK
LLH	LONG LEG HORIZONTAL
LLV	LONG LEG VERTICAL
LOC	LOCATION
LONGIT	LONGITUDINAL
LSL	LONG-SLOTTED HOLE
MAX	MAXIMUM
MECH	MECHANICAL
MFR	MANUFACTURER
MIN	MINIMUM
MISC	MISCELLANEOUS
N/A	NOT APPLICABLE
NF	NEAR FACE
NO	NUMBER
OC	ON CENTER, CENTERS
OD	OUTSIDE DIAMETER
OF	OUTSIDE FACE
OPNG	OPENING
OPP	OPPOSITE
OVS	OVERSIZE HOLE
PERP	PERPENDICULAR
PL	PROPERTY LINE OR PLATE
PSF	POUNDS PER SQUARE FOOT
PSI	POUNDS PER SQUARE INCH
R	RADIUS
REBAR	REINFORCEMENT BAR
REF	REFER TO OR REFERENCE
REINF	REINFORCEMENT OR REINFORCING
REQD	REQUIRED
SCH	SCHEDULE
SECT	SECTION
SHT	SHEET
SIM	SIMILAR
SPCG	SPACING
SS	STAINLESS STEEL
SSL	SHORT-SLOTTED HOLE
STD	STANDARD
STIFF	STIFFENER
STL	STEEL
STRUC	STRUCTURAL
SUPT	SUPPORT
T&B	TOP AND BOTTOM
TOC	TOP OF CONCRETE
TOS	TOP OF STEEL
TOW	TOP OF WALL
TRANS	TRANSVERSE
TYP	TYPICAL
UNO	UNLESS NOTED OTHERWISE
VERT	VERTICAL
w/	WITH
w/o	WITHOUT

LEGEND

SLOPE

STEP

SPAN

DEMOLITION AREA

GROUT

CONCRETE

SOIL/EARTH

CHAINLINK FENCE

BAR GRATING

RIVETED GRATING

DIAMOND PLATE

STEEL IN CROSS SECTION

GENERAL NOTES, SPECIAL INSPECTION, ABBREVIATIONS AND LEGEND

S-1

CDM Smith
14432 SE Eastgate Way
Suite 100
Bellevue, WA 98007
Tel: (425) 519-8300

IN ASSOCIATION WITH
BRIGHT ENGINEERING, INC
Consulting Structural & Civil Engineering
1809 7th Avenue, Suite 1100 Seattle WA 98101
206-625-3777 Fax 206-625-1851

REVIEWED BY SPU/WATER ENGINEERING ..... 20....

REVIEWED BY SPU/DRAINAGE ..... 20....

APPROVED BY SDOT STREET IMPROVEMENT PERMITTING ..... 20....

APPROVED FOR ADVERTISING
LIZ ALZEER
DEPARTMENT OF FINANCE & ADMINISTRATIVE SERVICES
SEATTLE, WASHINGTON . . . . . 20 . .

BY: . . . . . .
CITY PURCHASING & CONTRACTING SERVICES DIRECTOR

INITIALS AND DATE		INITIALS AND DATE	
DESIGNED	ll 12/06/2018	REVIEWED: DES.	CONST.
CHECKED	AB 12/07/2018	SDOT	PROJ. MGR.
DRAWN	KF 12/06/2018	RECEIVED	
CHECKED	AB 12/07/2018	REVISED AS BUILT	

ALL WORK SHALL BE DONE IN ACCORDANCE WITH THE CITY OF SEATTLE STANDARD PLANS AND SPECIFICATIONS AND OTHER DOCUMENTS CALLED FOR IN SECTION 0-02.3 OF THE PROJECT MANUAL.

STATE OF WASHINGTON 19819 12/10/2018 REGISTERED PROFESSIONAL ENGINEER

Seattle Public Utilities

ORDINANCE NO. 125475 PW NO. 2018-084
FUND: DWF
SCALE: NONE

PUMP STATION NO. 22 RETROFIT AND FORCE MAIN REPLACEMENT

JOB NO. PC C315071 R/W CO

VAULT PLAN NO. 776-474

SHEET 30 OF 71

000-000-0

VAULT SERIAL NO. | DATE | MARK | NATURE REVISIONS | MADE | CHK'D | REV'D

T:\242 Series – CDM Smith\242.01 PS 22 Retrofit & Force Main Replacement (Magnolia 60 CSO)\Drawings\Structural\S-1 261-1009_STRUCTGEN NOTES-SPEC INSP-ABBRV-LGND.dwg
casillio Dec-18-18 11:16am

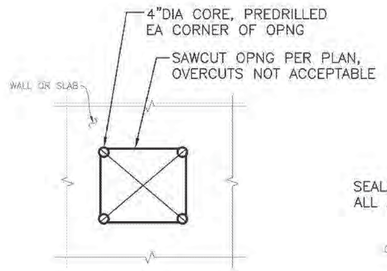

SAWCUTTING OF EXISTING CONCRETE

DETAIL 1 TYP
SCALE: NONE

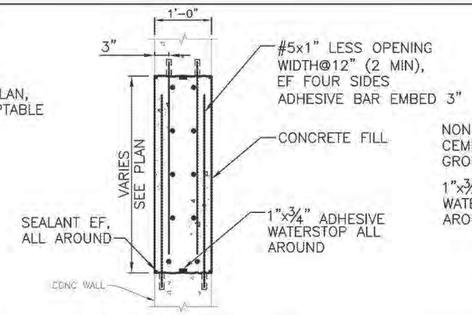

EXISTING OPENING CLOSURE (OVER 12"x12")

DETAIL 2 TYP
SCALE: NONE

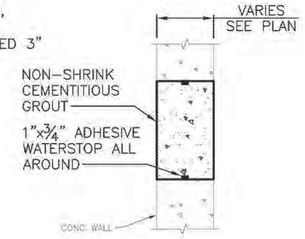

EXISTING OPENING CLOSURE (12"x12" AND UNDER)

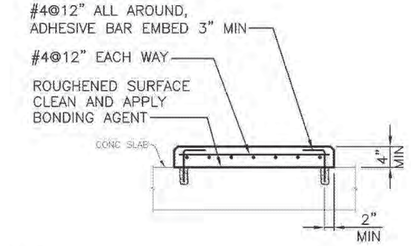

CONCRETE PAD

DETAIL 3 TYP
SCALE: NONE

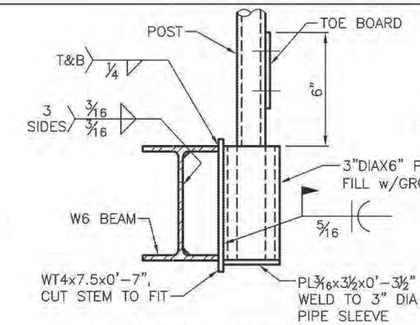

POST TO WIDE FLANGE BEAM ANCHORAGE

DETAIL 4 TYP
SCALE: NONE

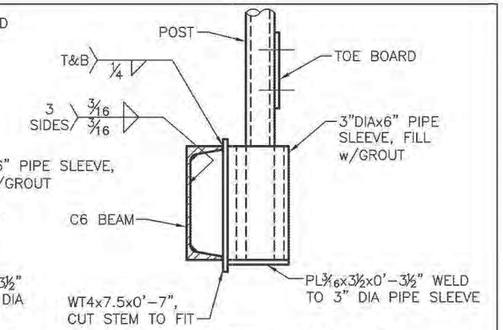

POST TO CHANNEL BEAM ANCHORAGE

DETAIL 5 TYP
SCALE: NONE

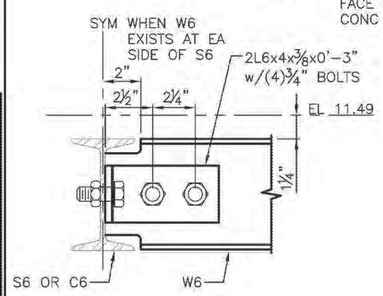

BEAM TO BEAM CONNECTION

DETAIL 6 —
SCALE: NONE

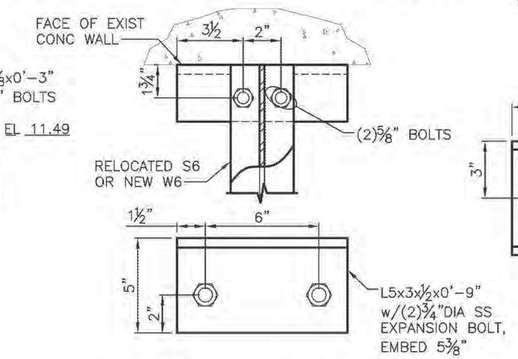

BEAM END CONNECTION AT CONC WALL

DETAIL 7 TYP
SCALE: NONE

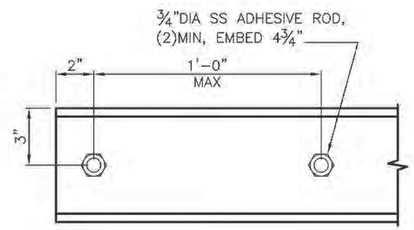

C6 GRATING SUPPORT AT FACE OF CONC WALL

DETAIL 8 TYP
SCALE: NONE

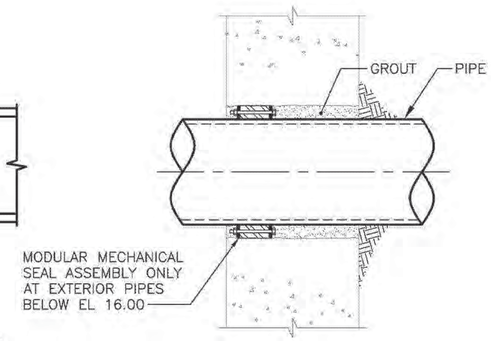

PIPE PENETRATION

DETAIL 9 TYP
SCALE: NONE

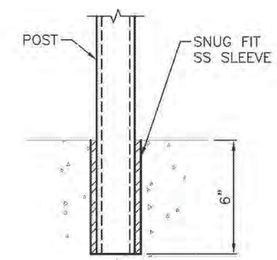

REMOVABLE POST ANCHORAGE

DETAIL 10 TYP
SCALE: NONE

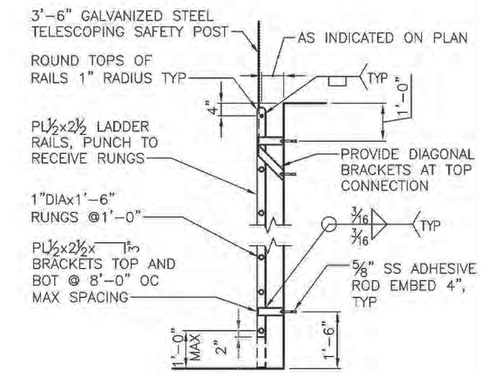

STEEL LADDER

DETAIL 11 TYP
SCALE: NONE

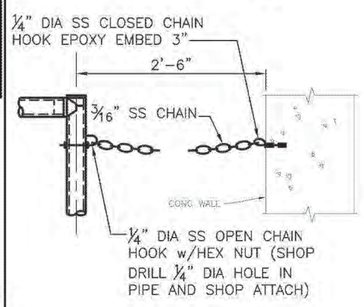

CHAIN OPENING

DETAIL 12 TYP
SCALE: NONE

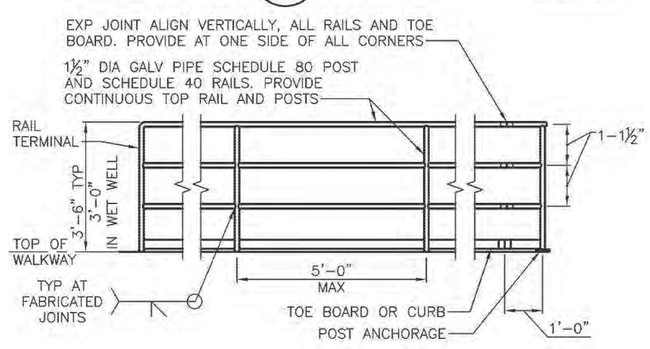

STEEL THREE-RAIL GUARDRAIL

DETAIL 13 TYP
SCALE: NONE

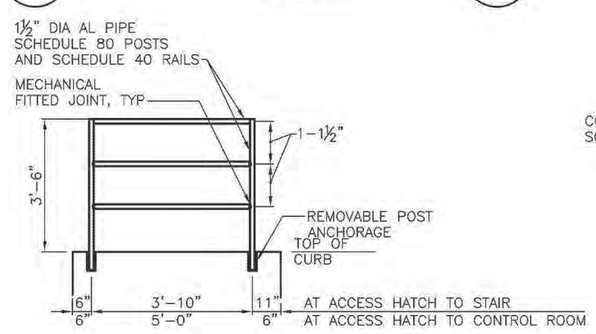

ALUMINUM THREE-RAIL GUARDRAIL

DETAIL 14 TYP
SCALE: NONE

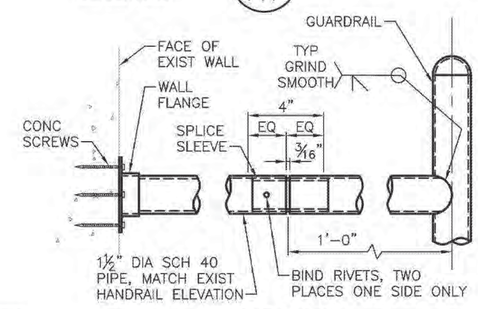

HANDRAIL EXPANSION JOINT

DETAIL 16 TYP
SCALE: NONE

NOTES:

1. AT LOCATIONS WHERE CONCRETE IS PLACED AGAINST EXISTING CONCRETE SURFACE, EXISTING CONCRETE SHALL BE ROUGHENED SURFACE TO ¼" AMPLITUDE AND APPLY BONDING AGENT.
2. CHAMFER ALL EXPOSED CONCRETE EDGES ¾", 45° BEVEL.
3. CORE DRILLED HOLES FOR CONDUITS AND PIPES SHALL BE AS INDICATED IN STRUCTURAL DRAWINGS.
4. IN WET WELL, DRILL OUT ALL CUT AND EXPOSED BOLTS AND REINFORCING BARS ½" DEEP. FILL HOLE WITH EPOXY GROUT. IN DRY WELL, COAT ALL CUT AND EXPOSED BOLTS OR RODS WITH EPOXY PAINT.

TYPICAL DETAILS
S-2

MARK	DATE	STRUCT TYP DETAILS.dwg	VAULT SERIAL NO.	NATURE REVISIONS	MADE	CHK'D	REV'D

000-000-0

T:\242 Series - CDM Smith\242.01 PS 22 Retrofit & Force Main Replacement (Magnolia 60 CSO)\Drawings\Structural\S-2 261-1009_ casalilio Dec-18-18 11:13am

CDM Smith
14432 SE Eastgate Way
Suite 100
Bellevue, WA 98007
Tel: (425) 519-8300

IN ASSOCIATION WITH
BRIGHT ENGINEERING, INC
Consulting Structural & Civil Engineering
1809 7th Avenue, Suite 1100 Seattle WA 98101
206-625-3777 Fax 206-625-1851

REVIEWED BY SPU/WATER ENGINEERING ..... 20.....
REVIEWED BY SPU/DRAINAGE ..... 20.....
APPROVED BY SDOT STREET IMPROVEMENT PERMITTING ..... 20.....

APPROVED FOR ADVERTISING
LIZ ALZEER
DEPARTMENT OF FINANCE & ADMINISTRATIVE SERVICES
SEATTLE, WASHINGTON 20
BY: .....
CITY PURCHASING & CONTRACTING SERVICES DIRECTOR

INITIALS AND DATE	INITIALS AND DATE
DESIGNED II 12/06/2018	REVIEWED: DES. CONST. SDOT PROJ. MGR.
CHECKED AB 12/07/2018	
DRAWN KF 12/06/2018	RECEIVED
CHECKED AB 12/07/2018	REVISED AS BUILT

ALL WORK SHALL BE DONE IN ACCORDANCE WITH THE CITY OF SEATTLE STANDARD PLANS AND SPECIFICATIONS AND OTHER DOCUMENTS CALLED FOR IN SECTION 0-02.3 OF THE PROJECT MANUAL.

STATE OF WASHINGTON 12/10/2018 19813 REGISTERED PROFESSIONAL ENGINEER

Seattle Public Utilities
ORDINANCE NO. 125475 PW NO. 2018-084
FUND: DWF
SCALE: NONE

PUMP STATION NO. 22 RETROFIT AND FORCE MAIN REPLACEMENT

JOB NO. PC C315071 R/W CO
VAULT PLAN NO. 776-474
SHEET 31 OF 71

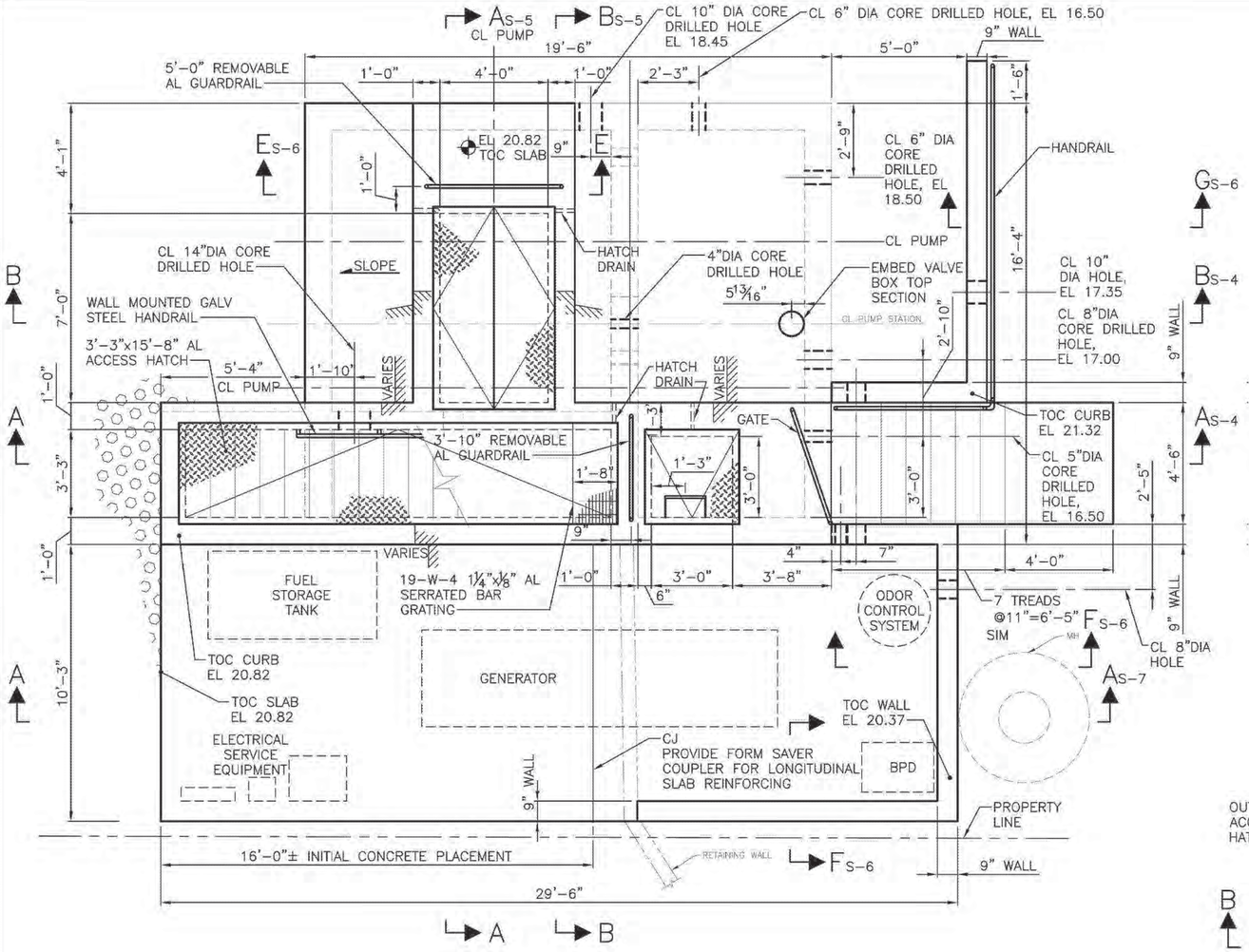

ROOF PLAN
3/8" = 1'-0"

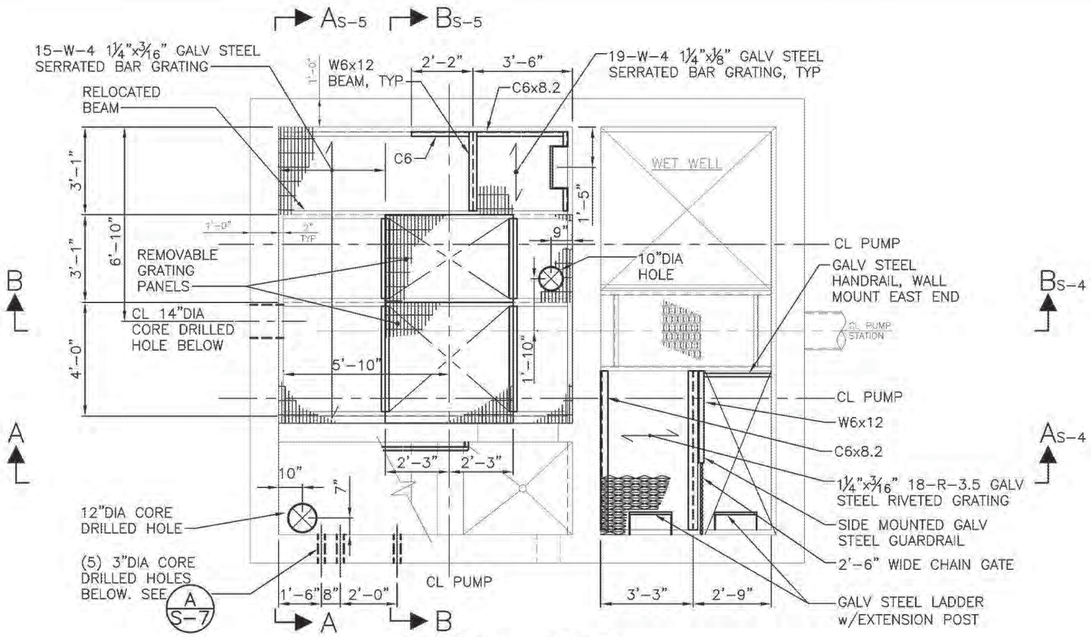

CONTROL ROOM PLAN
3/8" = 1'-0"

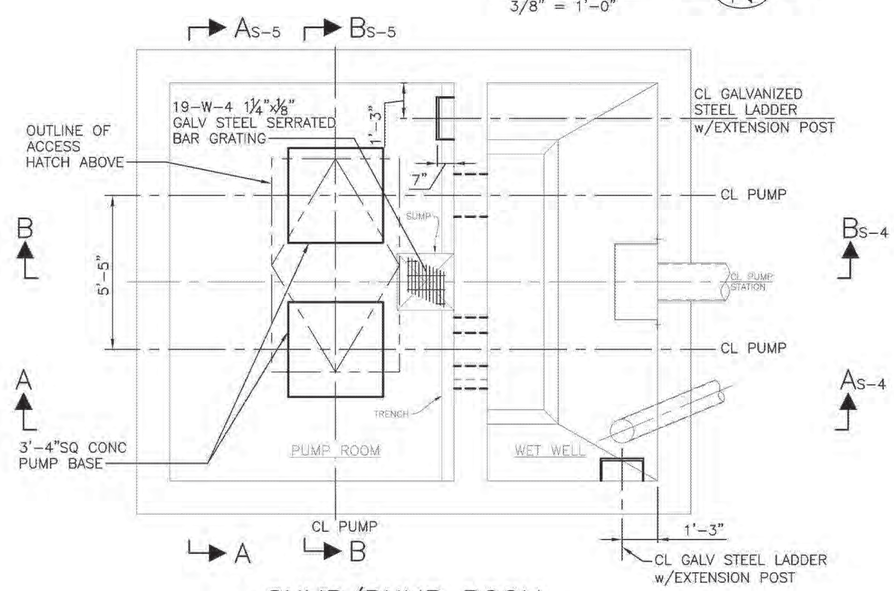

SUMP/PUMP ROOM PLAN
3/8" = 1'-0"

2 1 0 2 4
SCALE IN FEET

ROOF, CONTROL ROOM, WET WELL PLATFORM AND WET WELL PLANS
S-3

VAULT SERIAL NO.	DATE	MARK	NATURE REVISIONS	MADE	CHK'D	REV'D

000-000-0

CDM Smith
14432 SE Eastgate Way
Suite 100
Bellevue, WA 98007
Tel: (425) 519-8300

IN ASSOCIATION WITH
BRIGHT ENGINEERING, INC
Consulting Structural & Civil Engineering
1809 7th Avenue, Suite 1100 Seattle WA 98101
206-625-3777 Fax 206-625-1851

REVIEWED BY SPU/WATER ENGINEERING ..... 20.....
REVIEWED BY SPU/DRAINAGE ..... 20.....
APPROVED BY SDOT STREET IMPROVEMENT PERMITTING ..... 20.....

APPROVED FOR ADVERTISING
LIZ ALZEER
DEPARTMENT OF FINANCE & ADMINISTRATIVE SERVICES
SEATTLE, WASHINGTON ..... 20..
BY: .....
CITY PURCHASING & CONTRACTING SERVICES DIRECTOR

INITIALS AND DATE	
DESIGNED II 12/06/2018	
CHECKED AB 12/07/2018	
DRAWN KF 12/06/2018	
CHECKED AB 12/07/2018	

INITIALS AND DATE	
REVIEWED:	
DES.	CONST.
SDOT	PROJ. MGR.
RECEIVED	
REVISED AS BUILT	

ALL WORK SHALL BE DONE IN ACCORDANCE WITH THE CITY OF SEATTLE STANDARD PLANS AND SPECIFICATIONS AND OTHER DOCUMENTS CALLED FOR IN SECTION 0-02.3 OF THE PROJECT MANUAL.

STATE OF WASHINGTON 19813 12/10/2018 REGISTERED PROFESSIONAL ENGINEER

Seattle Public Utilities
ORDINANCE NO. 125475 PW NO. 2018-064
FUND: DWF
SCALE: 3/8"=1'-0"

PUMP STATION NO. 22 RETROFIT AND FORCE MAIN REPLACEMENT

JOB NO. PC C315071 R/W CO
VAULT PLAN NO. 776-474
SHEET 32 OF 71

UNIT 11 01-17-2019 JRM

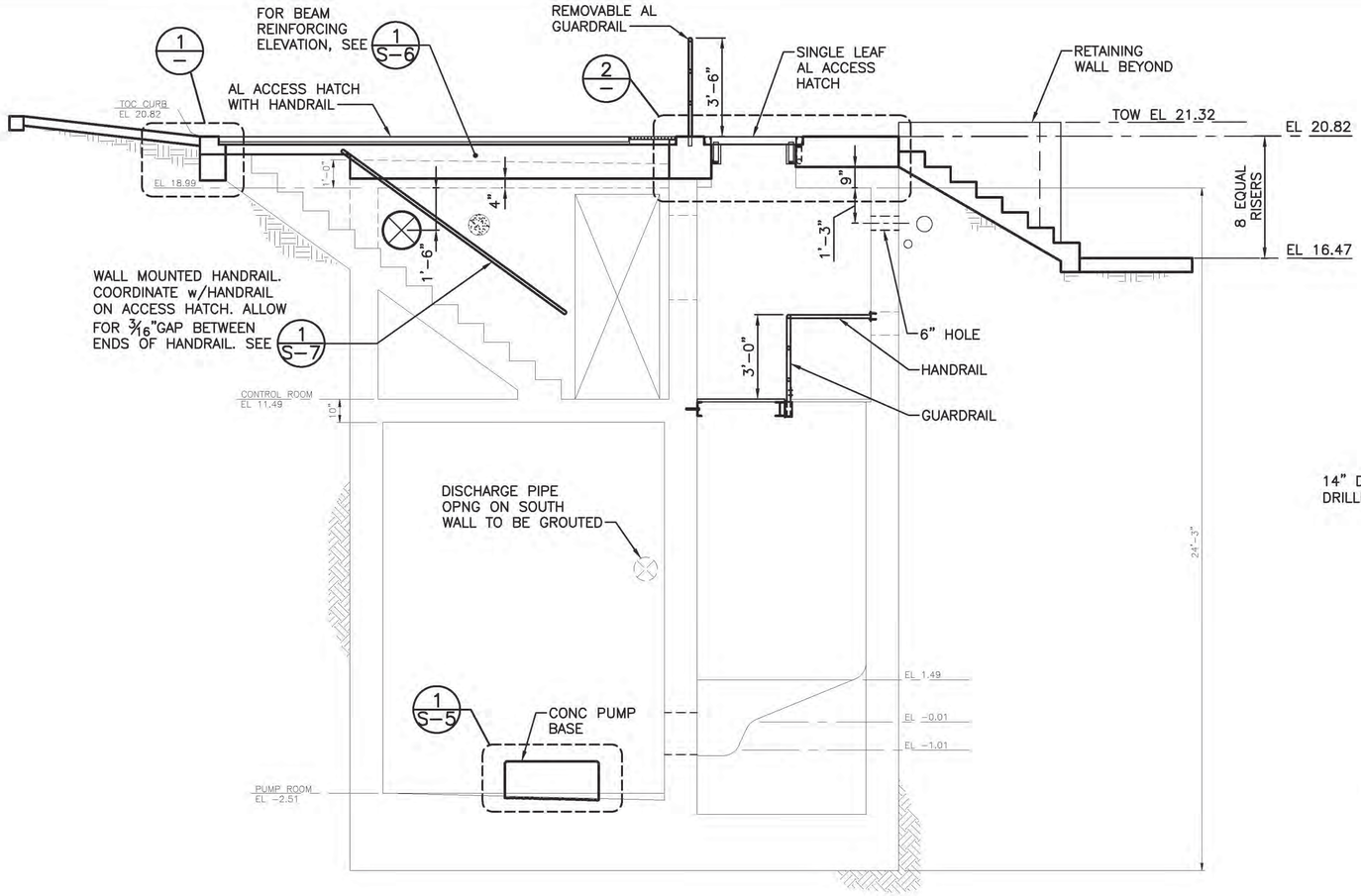

SECTION A–A S-3
SCALE: 3/8" = 1'-0"

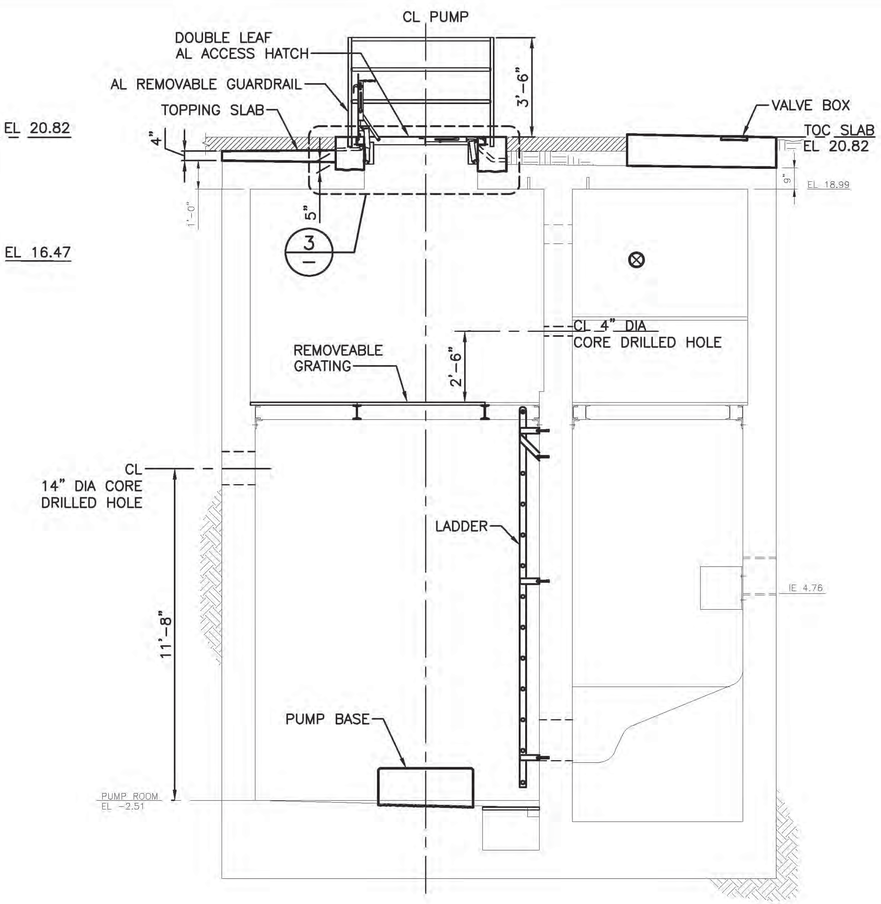

SECTION B–B S-3
SCALE: 3/8" = 1'-0"

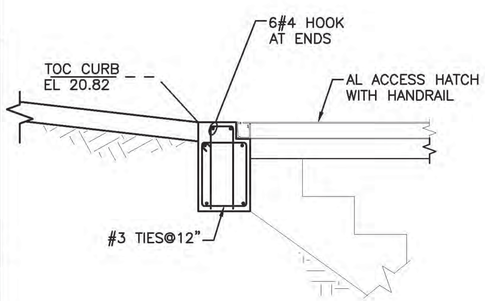

DETAIL 1/-
3/4" = 1'-0"

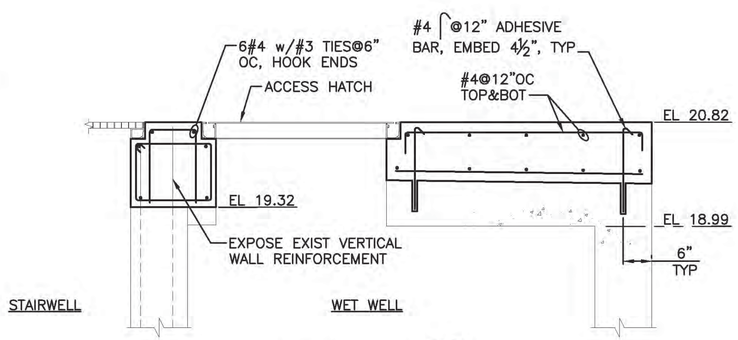

DETAIL 2/-
3/4" = 1'-0"

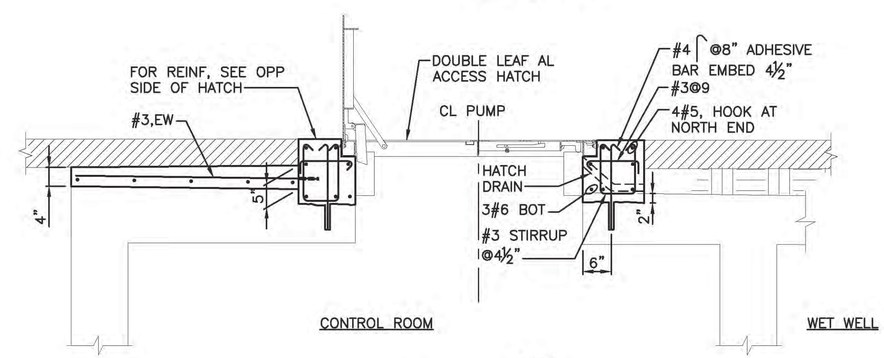

DETAIL 3/-
3/4" = 1'-0"

2 1 0 2 4
SCALE IN FEET

SECTIONS AND DETAILS
S-4

VAULT SERIAL NO.	DATE	MARK	NATURE REVISIONS	MADE	CHK'D	REV'D

T:\242 Series – CDM Smith\242.01 PS 22 Retrofit & Force Main Replacement (Magnolia 60 CSO)\Drawings\Structural\S-4 261-1009_P-STRUCSECT-DETLS.dwg
asotilio Dec-20-18 4:52pm

000-000-0

CDM Smith
14432 SE Eastgate Way
Suite 100
Bellevue, WA 98007
Tel: (425) 519-8300

IN ASSOCIATION WITH
BRIGHT ENGINEERING, INC
Consulting Structural & Civil Engineering
1809 7th Avenue, Suite 1100 Seattle WA 98101
206-625-3777 Fax 206-625-1851

REVIEWED BY SPU/WATER ENGINEERING ..... 20.....
REVIEWED BY SPU/DRAINAGE ..... 20.....
APPROVED BY SDOT STREET IMPROVEMENT PERMITTING ..... 20.....

APPROVED FOR ADVERTISING
LIZ ALZEER
DEPARTMENT OF FINANCE & ADMINISTRATIVE SERVICES
SEATTLE, WASHINGTON . . . . . 20 . . .
BY: . . . . . .
CITY PURCHASING & CONTRACTING SERVICES DIRECTOR

INITIALS AND DATE	INITIALS AND DATE
DESIGNED II 12/06/2018	REVIEWED: DES. CONST. SDOT PROJ. MGR.
CHECKED AB 12/07/2018	
DRAWN KF 12/06/2018	RECEIVED
CHECKED AB 12/07/2018	REVISED AS BUILT

ALL WORK SHALL BE DONE IN ACCORDANCE WITH THE CITY OF SEATTLE STANDARD PLANS AND SPECIFICATIONS AND OTHER DOCUMENTS CALLED FOR IN SECTION 0-02.3 OF THE PROJECT MANUAL.

STATE OF WASHINGTON 19813 12/10/2018 PROFESSIONAL ENGINEER

Seattle Public Utilities
ORDINANCE NO. 125475 PW NO. 2018-064
FUND: DWF
SCALE: AS SHOWN

PUMP STATION NO. 22 RETROFIT AND FORCE MAIN REPLACEMENT

JOB NO. PC C315071 R/W CO
VAULT PLAN NO. 776-474
SHEET 33 OF 71

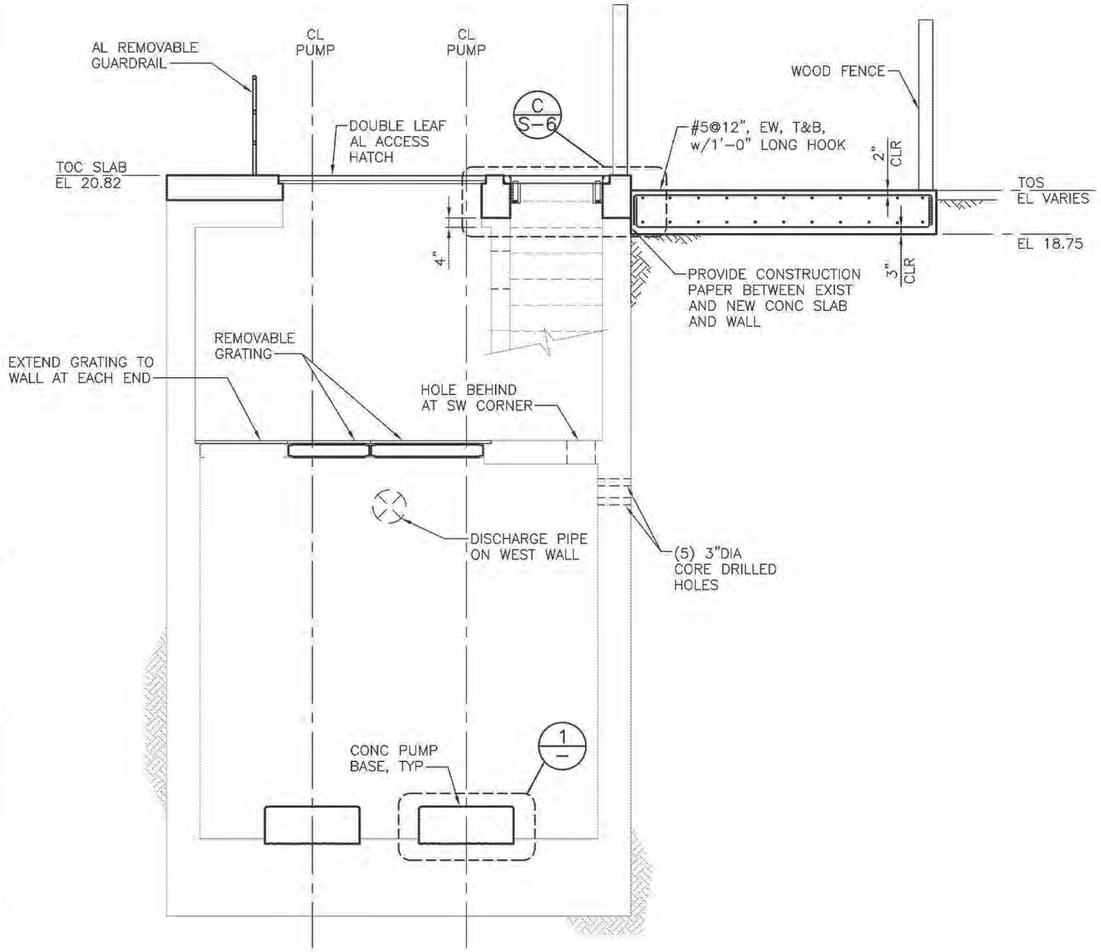

SECTION A–A S-3
SCALE: 3/8" = 1'-0"

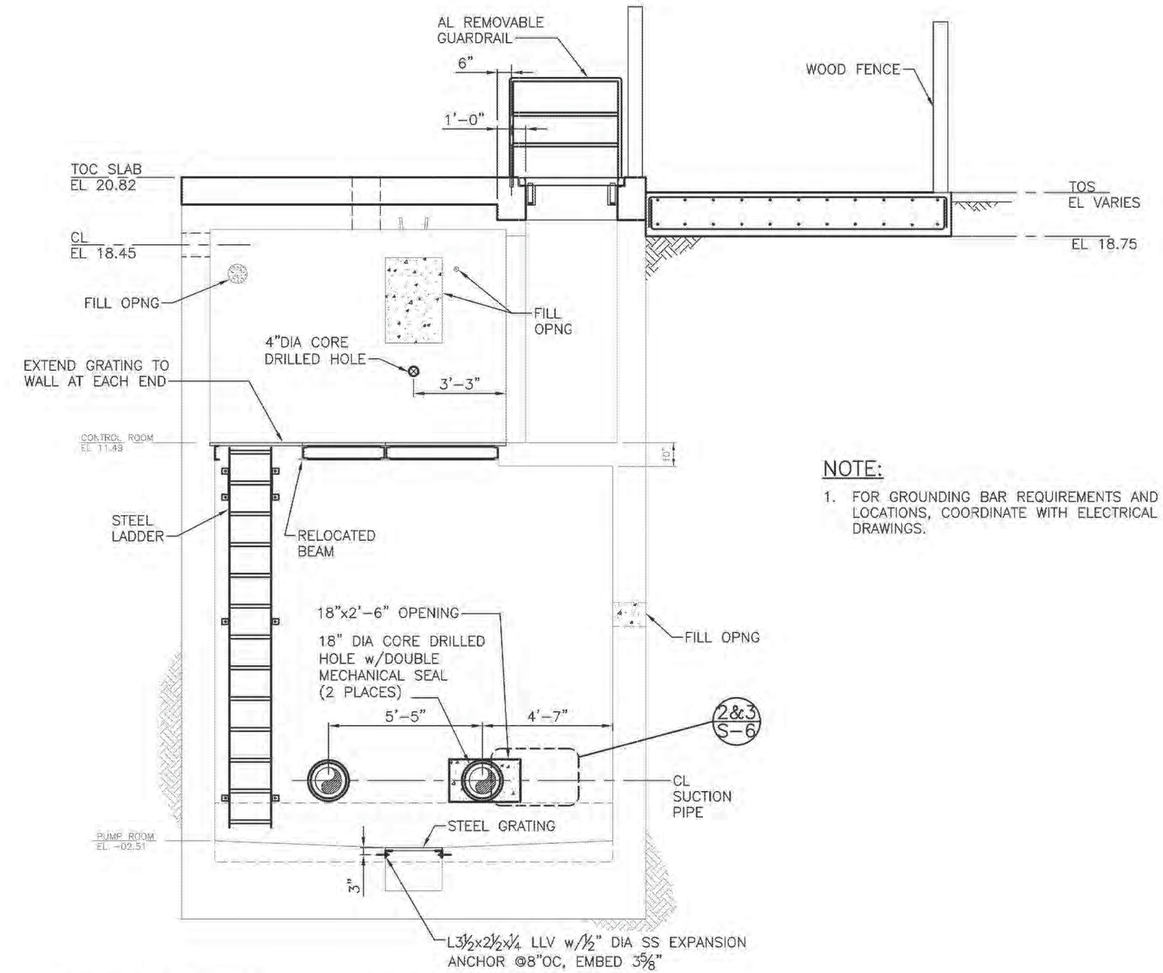

SECTION B–B S-3
SCALE: 3/8" = 1'-0"

NOTE:

1. FOR GROUNDING BAR REQUIREMENTS AND LOCATIONS, COORDINATE WITH ELECTRICAL DRAWINGS.

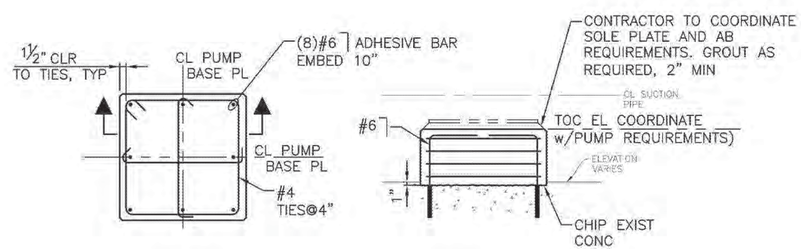

PLAN SECTION

PUMP PEDESTAL DETAIL 1/—
1/2" = 1'-0"

2 1 0 2 4
SCALE IN FEET

SECTIONS AND DETAILS
S-5

CDM Smith
14432 SE Eastgate Way
Suite 100
Bellevue, WA 98007
Tel: (425) 519-8300

IN ASSOCIATION WITH
BRIGHT ENGINEERING, INC
Consulting Structural & Civil Engineering
1809 7th Avenue, Suite 1100 Seattle WA 98101
206-625-3777 Fax 206-625-1851

REVIEWED BY SPU/WATER ENGINEERING ..... 20.....
REVIEWED BY SPU/DRAINAGE ..... 20.....
APPROVED BY SDOT STREET IMPROVEMENT PERMITTING ..... 20.....

APPROVED FOR ADVERTISING
LIZ ALZEER
DEPARTMENT OF FINANCE & ADMINISTRATIVE SERVICES
SEATTLE, WASHINGTON 20
BY: .....
CITY PURCHASING & CONTRACTING SERVICES DIRECTOR

INITIALS AND DATE	INITIALS AND DATE
DESIGNED ll 12/06/2018	REVIEWED: DES. CONST. SDOT PROJ. MGR.
CHECKED AB 12/07/2018	
DRAWN KF 12/06/2018	RECEIVED
CHECKED AB 12/07/2018	REVISED AS BUILT

ALL WORK SHALL BE DONE IN ACCORDANCE WITH THE CITY OF SEATTLE STANDARD PLANS AND SPECIFICATIONS AND OTHER DOCUMENTS CALLED FOR IN SECTION 0-02.3 OF THE PROJECT MANUAL.

STATE OF WASHINGTON 19813 PROFESSIONAL ENGINEER 12/10/2018

Seattle Public Utilities
ORDINANCE NO. 125475 PW NO. 2018-064
FUND: DWF
SCALE: 3/8"=1'-0"

PUMP STATION NO. 22 RETROFIT AND FORCE MAIN REPLACEMENT

JOB NO. PC C315071 R/W CO
VAULT PLAN NO. 776-474
SHEET 34 OF 71

VAULT SERIAL NO.	DATE	MARK	NATURE REVISIONS	MADE	CHK'D	REV'D

T:\242 Series – CDM Smith\242.01 PS 22 Retrofit & Force Main Replacement (Magnolia 60 CSO)\Drawings\Structural\S-5 261-1009_STRU SECT DETLS.dwg
casollio Dec-18-18 11:28am

000-000-0

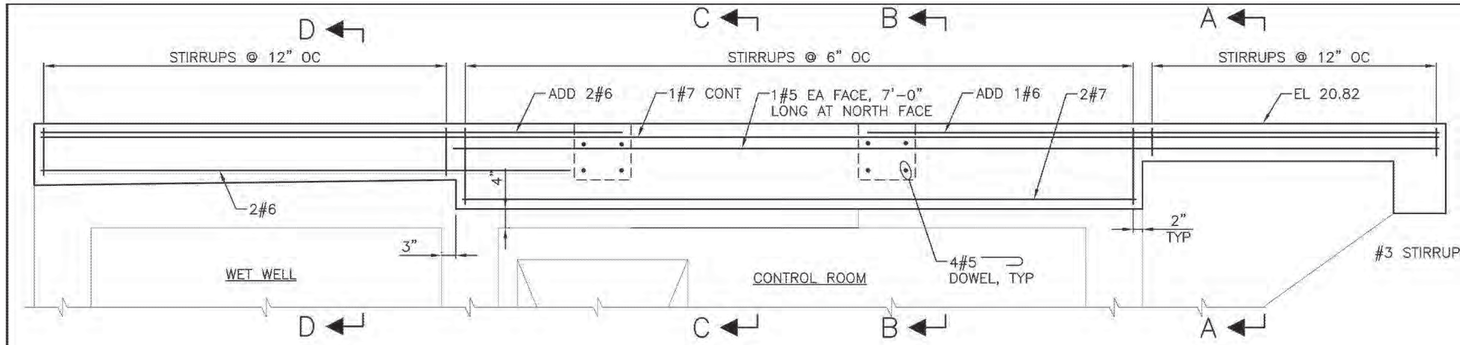

BEAM REINFORCING ELEVATION (LOOKING SOUTH)

DETAIL 1 / S-4
3/4" = 1'-0"

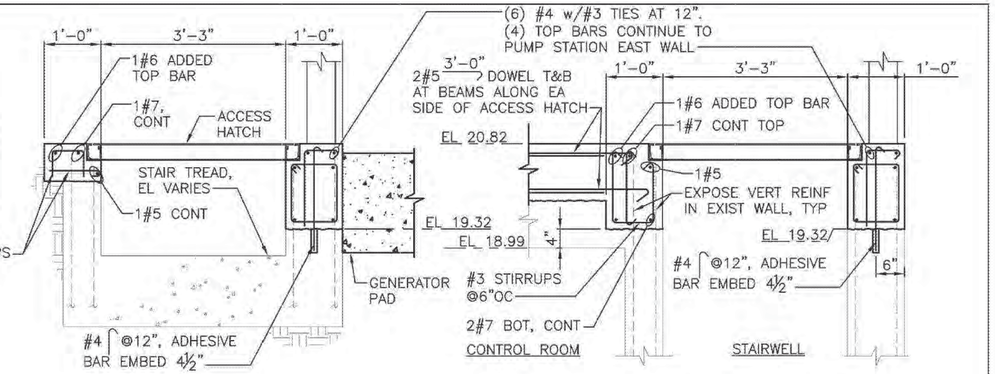

SECTION A–A S-6
3/4" = 1'-0"

SECTION B–B S-6
3/4" = 1'-0"

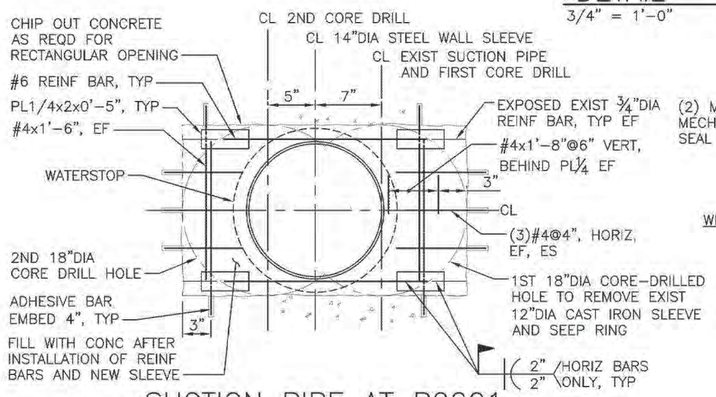

SUCTION PIPE AT P2201

DETAIL 2 / S-5
1 1/2 = 1'-0"

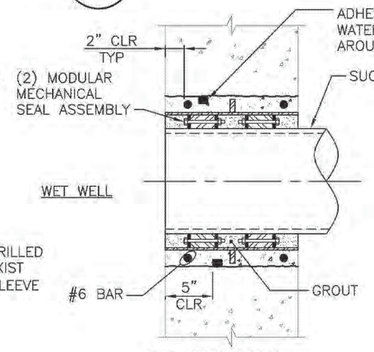

AT P2201

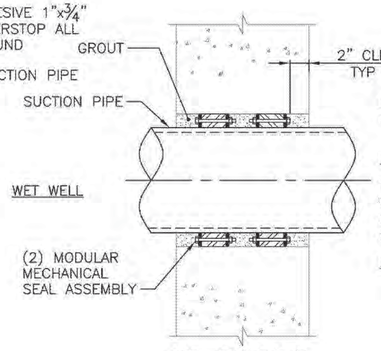

AT P2202

SUCTION PIPE PENETRATION DETAIL 3 / TYP
1 1/2 = 1'-0"

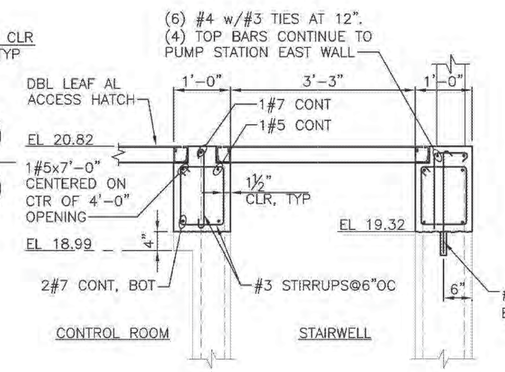

SECTION C–C S-6
3/4" = 1'-0"

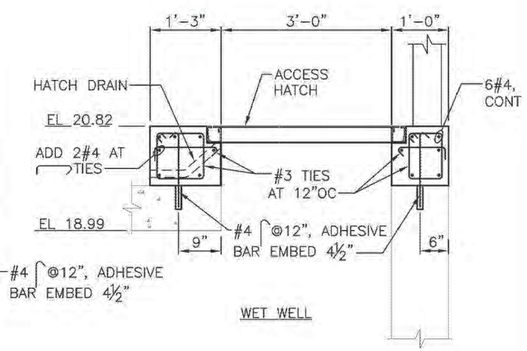

SECTION D–D S-6
3/4" = 1'-0"

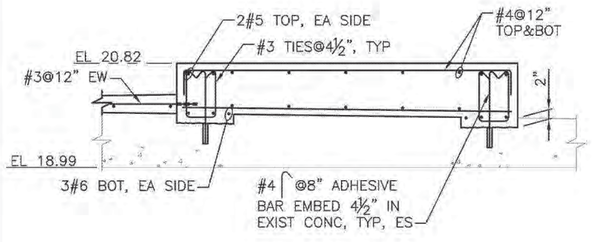

SECTION E–E S-3
3/4" = 1'-0"

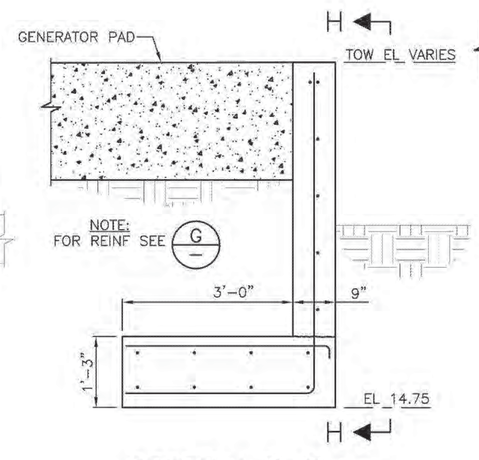

SECTION F–F S-3
3/4" = 1'-0"

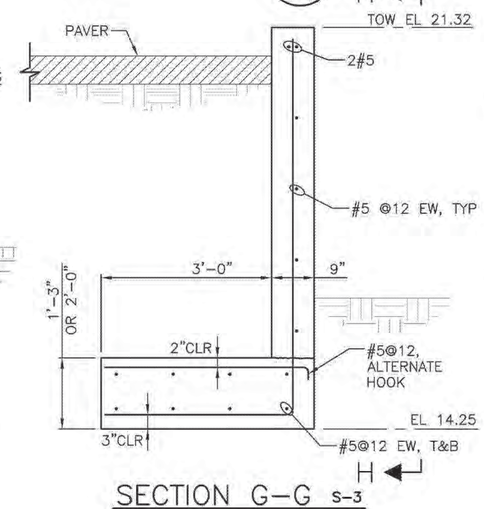

SECTION G–G S-3
3/4" = 1'-0"

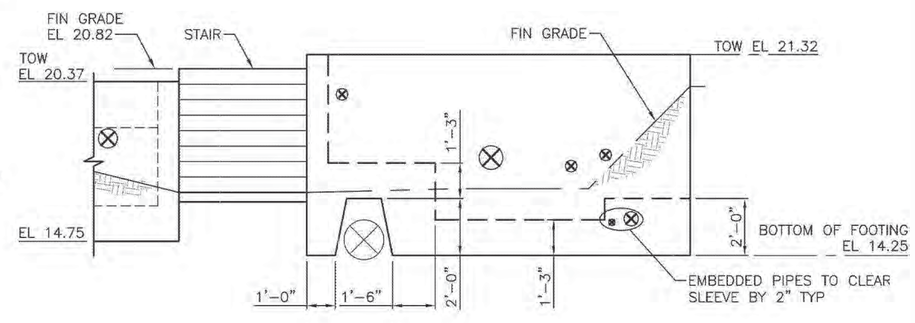

RETAINING WALL
ELEVATION H / —
3/8" = 1'-0"

½ ¼ 0 ½ 1 SCALE IN FEET

1 ½ 0 1 2 SCALE IN FEET

SECTIONS AND DETAILS
S-6

VAULT SERIAL NO.	DATE	MARK	NATURE REVISIONS	MADE	CHK'D	REV'D

000-000-000

CDM Smith
14432 SE Eastgate Way
Suite 100
Bellevue, WA 98007
Tel: (425) 519-8300

IN ASSOCIATION WITH
BRIGHT ENGINEERING, INC
Consulting Structural & Civil Engineering
1809 7th Avenue, Suite 1100 Seattle WA 98101
206-625-3777 Fax 206-625-1851

REVIEWED BY SPU/WATER ENGINEERING ..... 20....
REVIEWED BY SPU/DRAINAGE ..... 20....
APPROVED BY SDOT STREET IMPROVEMENT PERMITTING ..... 20....

APPROVED FOR ADVERTISING
LIZ ALZEER
DEPARTMENT OF FINANCE & ADMINISTRATIVE SERVICES
SEATTLE, WASHINGTON ..... 20..
BY: .....
CITY PURCHASING & CONTRACTING SERVICES DIRECTOR

INITIALS AND DATE	INITIALS AND DATE
DESIGNED II 12/06/2018	REVIEWED: DES. CONST. SDOT PROJ. MGR.
CHECKED AB 12/07/2018	
DRAWN KLF 12/06/2018	RECEIVED
CHECKED AB 12/07/2018	REVISED AS BUILT

ALL WORK SHALL BE DONE IN ACCORDANCE WITH THE CITY OF SEATTLE STANDARD PLANS AND SPECIFICATIONS AND OTHER DOCUMENTS CALLED FOR IN SECTION 0-02.3 OF THE PROJECT MANUAL.

STATE OF WASHINGTON 19813 REGISTERED PROFESSIONAL ENGINEER 12/10/2018

Seattle Public Utilities
ORDINANCE NO. 125475 PW NO. 2018-064
FUND: DWF
SCALE: AS NOTED

PUMP STATION NO. 22 RETROFIT AND FORCE MAIN REPLACEMENT

JOB NO. PC C315071 R/W CO
VAULT PLAN NO. 776-474
SHEET 35 OF 71

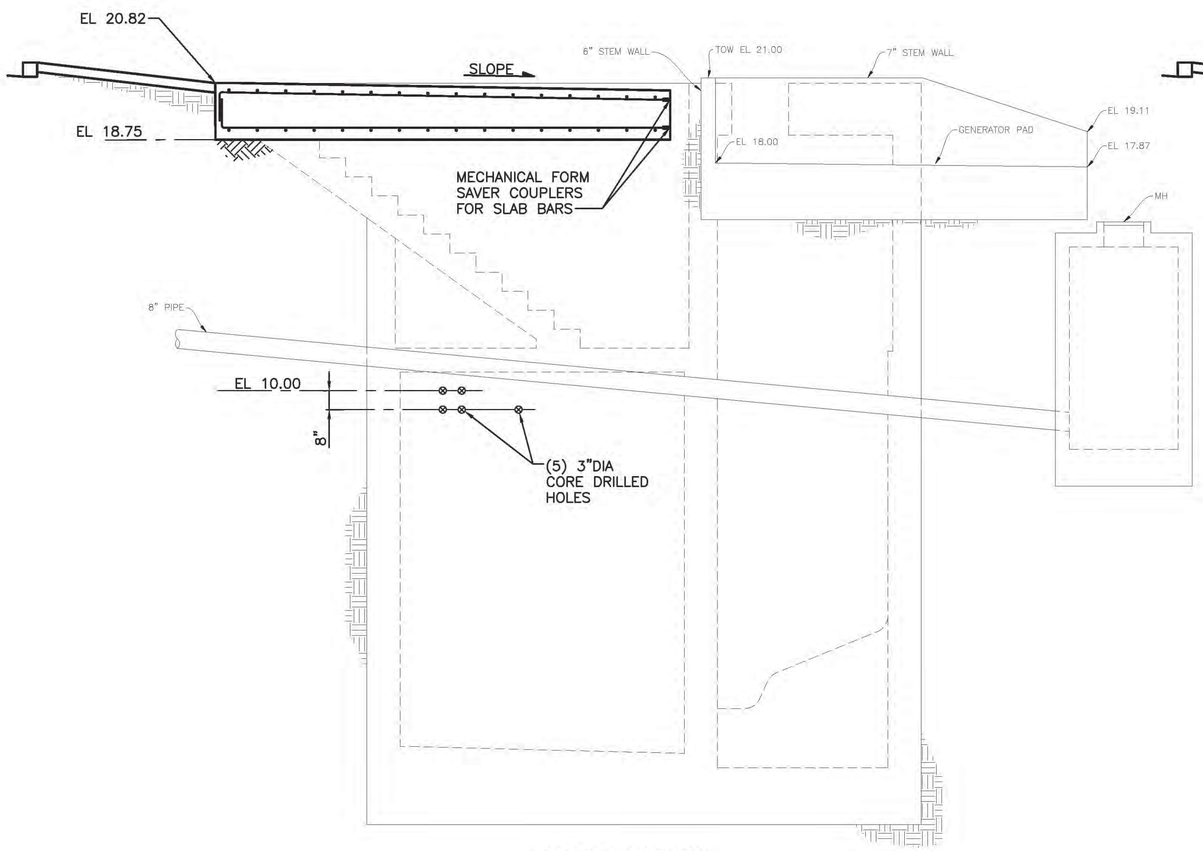

PRIOR TO DEMOLITION OF EXISTING PAD

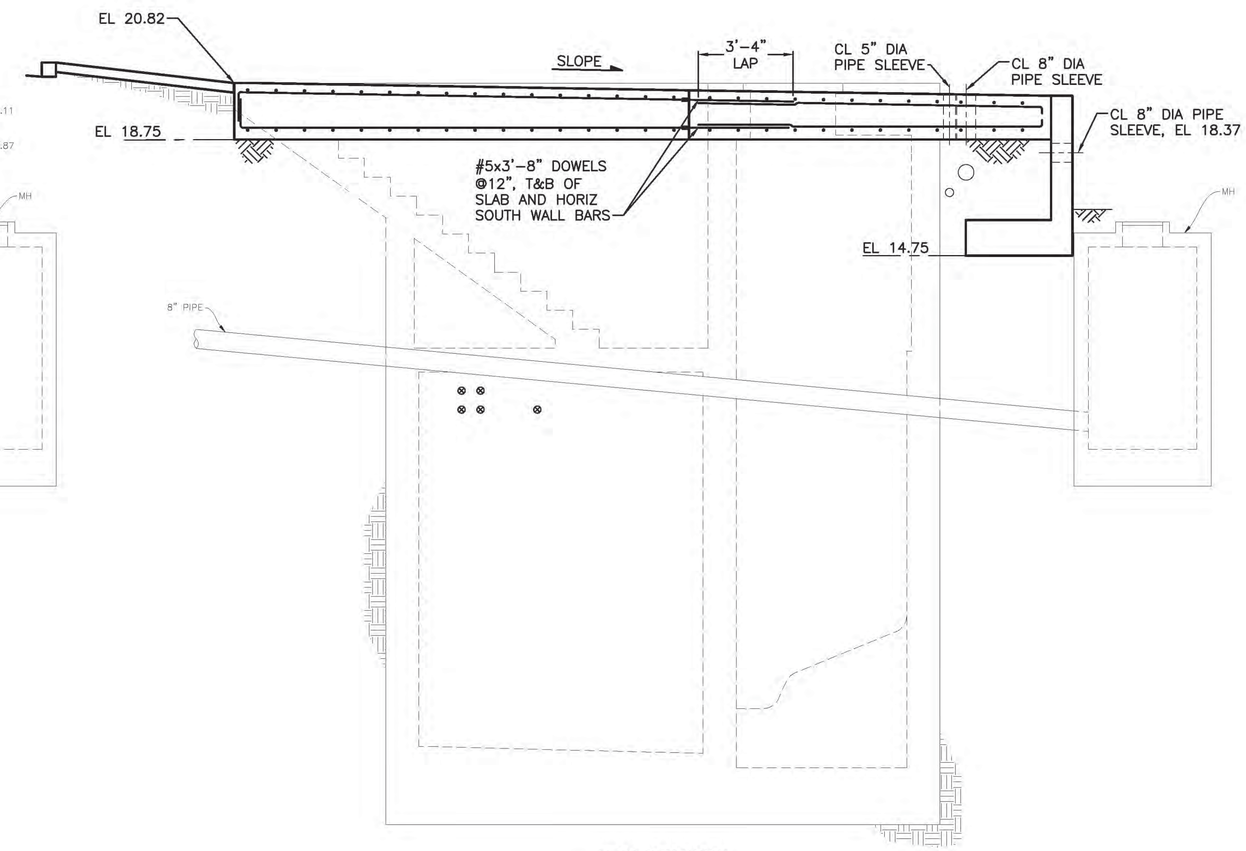

AFTER DEMOLITION OF EXISTING PAD

SECTION A–A S-3
SCALE: 3/8" = 1'-0"

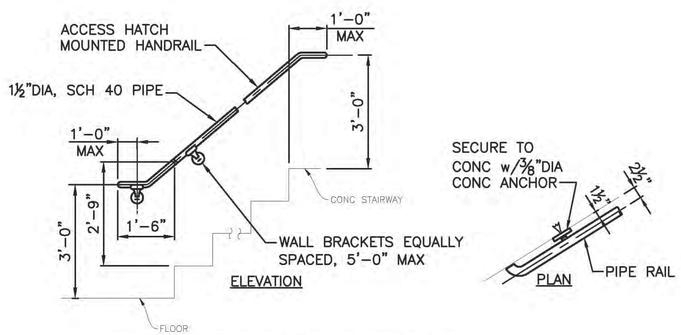

WALL MOUNTED HANDRAIL DETAIL 1/S-4
SCALE: NONE

2 1 0 2 4
SCALE IN FEET

SECTIONS AND DETAILS
S-7

VAULT SERIAL NO.	DATE	MARK	NATURE REVISIONS	MADE	CHK'D	REV'D

T:\242 Series - CDM Smith\242.01 PS 22 Retrofit & Force Main Replacement (Magnolia 60 CSO)\Drawings\Structural\S-7 261-1009_-STRUCTSECT-DETLS.dwg
casdillo Dec-20-18 4:52pm

000-000-0

CDM Smith
14432 SE Eastgate Way
Suite 100
Bellevue, WA 98007
Tel: (425) 519-8300

IN ASSOCIATION WITH
BRIGHT ENGINEERING, INC
Consulting Structural & Civil Engineering
1809 7th Avenue, Suite 1100 Seattle WA 98101
206-625-3777 Fax: 206-625-1831

REVIEWED BY SPU/WATER ENGINEERING ..... 20.....
REVIEWED BY SPU/DRAINAGE ..... 20.....
APPROVED BY SDOT STREET IMPROVEMENT PERMITTING ..... 20.....

APPROVED FOR ADVERTISING
LIZ ALZEER
DEPARTMENT OF FINANCE & ADMINISTRATIVE SERVICES
SEATTLE, WASHINGTON . . . . . 20 . . .
BY: . . . . . .
CITY PURCHASING & CONTRACTING SERVICES DIRECTOR

INITIALS AND DATE		INITIALS AND DATE	
DESIGNED	II 12/06/2018	REVIEWED: DES.	CONST.
CHECKED	AB 12/07/2018	SDOT	PROJ. MGR.
DRAWN	KF 12/06/2018	RECEIVED	
CHECKED	AB 12/07/2018	REVISED AS BUILT	

ALL WORK SHALL BE DONE IN ACCORDANCE WITH THE CITY OF SEATTLE STANDARD PLANS AND SPECIFICATIONS AND OTHER DOCUMENTS CALLED FOR IN SECTION 0-02.3 OF THE PROJECT MANUAL.

STATE OF WASHINGTON 19818 12/10/2018 STRUCTURAL PROFESSIONAL ENGINEER

Seattle Public Utilities
ORDINANCE NO. 125475 PW NO. 2018-064
FUND: DWF
SCALE: AS SHOWN

PUMP STATION NO. 22 RETROFIT AND FORCE MAIN REPLACEMENT

JOB NO. PC C315071 R/W CO
VAULT PLAN NO. 776-474
SHEET 36 OF 71

MECHANICAL ABBREVIATIONS:

AASHTO	AMERICAN ASSOC. OF STATE HIGHWAY TRANSPORTATION OFFICIALS
AB	ANCHOR BOLT
AC	ASPHALT CONCRETE
ACP	ASPHALT CONCRETE PAVEMENT
ADS	POLYETHYLENE PIPE
APPROX	APPROXIMATE
APWA	AMERICAN PUBLIC WORKS ASSOCIATION
AVE	AVENUE
BF	BLIND FLANGE
BO	BLOW-OFF
BOT	BOTTOM
CB	CATCH BASIN
CDF	CONTROLLED DENSITY FILL
C/L, CL	CENTERLINE
CLR	CLEAR
CO	CLEANOUT
CONC	CONCRETE
CPLG	COUPLING
CSBC	CRUSHED SURFACING BASE COURSE
CSTC	CRUSHED SURFACING TOP COURSE
CULV	CULVERT
D	DEPTH, DOUBLE, DRAIN
DI	DUCTILE IRON
DIP	DUCTILE IRON PIPE
DIA	DIAMETER
DR	DRIVE
DWG	DRAWING
E	EAST, ELECTRICAL
EA	EACH
EL, ELEV	ELEVATION
EP	EDGE OF PAVEMENT
EX	EXISTING
FCA	FLANGED COUPLING ADAPTER
FF	FINSHED FLOOR
FG	FINISH GRADE
FL	FLANGE
GALV	GALVANIZED
GPM	GALLONS PER MINUTE
GRAV	GRAVEL
GRV	GROOVED
GV	GATE VALVE
HDPE	HIGH DENSITY POLYETHYLENE
HMA	HOT MIX ASPHALT
HP	HORSE POWER
HYD	HYDRANT
ID	INSIDE DIAMETER
IE	INVERT ELEVATION
IPS	IRON PIPE SIZE
JB	JUNCTION BOX
L	LENGTH
LF	LINEAR FEET
LT	LEFT
MAX	MAXIMUM
MB	MAIL BOX
MFR	MANUFACTURER
MH	MANHOLE
MIN	MINIMUM
MJ	MECHANICAL JOINT
MON	MONUMENT
N	NORTH
NE	NORTHEAST
NIC	NOT IN CONTRACT
NO.	NUMBER
NTS	NOT TO SCALE
NW	NORTHWEST
OC	ON CENTER
OD	OUTSIDE DIAMETER
OH	OVERHEAD
OHWM	ORDINARY HIGH WATER MARK
OP	OVERHEAD POWER
OPG	OPENING
P	POWER
PE	PLAIN END
PSF	POUNDS PER SQUARE FOOT
PVC	POLYVINYL CHLORIDE
PVMT	PAVEMENT
PWR	POWER
RD	ROAD
REQ'D	REQUIRED
RET	RETAINING
RFCA ADAPTER	RESTRAINED FLANGED COUPLING
ROW	RIGHT OF WAY
RPM	ROTATION PER MINUTE
RT	RIGHT
S	SOUTH, SLOPE, SOCKET, SINGLE
SCH	SCHEDULE
SCO	SEWER CLEANOUT
SD	STORM DRAIN
SDMH	STORM DRAIN MANHOLE
SDR	STANDARD DIMENSION RATIO
SE	SOUTHEAST
SERV	SERVICE
SF	SILT FENCE
SMH	SEWER MANHOLE
SS	SANITARY SEWER,
SST	STAINLESS STEEL
ST	STREET
STA	STATION
STD	STANDARD
STL	STEEL
SW	SOUTHWEST
SYM	SYMMETRICAL
TBM	TEMPORARY BENCHMARK
T	TELEPHONE
TELJB	TELEPHONE JUNCTION BOX
TELR	TELEPHONE RISER
TV	TELEVISION (CABLE)
TVJB	TELEVISION (CABLE) JUNCTION BOX
TVR	TELEVISION (CABLE) RISER
TYP	TYPICAL
U/C	UNDER CONSTRUCTION
UNO	UNLESS NOTED OTHERWISE
V	VENT
W/	WITH
W	WATER, WEST
WM	WATER METER
WSDOT	WASHINGTON STATE DEPARTMENT OF TRANSPORTATION
WS	WATER SURFACE

MECHANICAL NOTES:

UNLESS OTHERWISE NOTED:

1. PIPING SHALL BE INSTALLED IN THE HORIZONTAL AND VERTICAL ALIGNMENT SHOWN HEREIN. ADJUSTMENTS TO THE PLANS AND SPECIFICATIONS SHALL BE REVIEWED BY ENGINEER AND APPROVED BY SEATTLE PUBLIC UTILITIES PRIOR TO INSTALLATION. THE OWNER ASSUMES NO LIABILITY FOR WORK COMPLETED PRIOR TO CONTRACTOR NOTIFYING ENGINEER OF ALIGNMENT CHANGES AND ENGINEERS REVIEW OF ALIGNMENT CHANGES.

2. BOLTS FOR FLANGED CONNECTIONS SHALL BE ASTM A307, GRADE B. NUTS SHALL BE PER ASTM A563. WASHERS SHALL BE PER ASTM F436. ALL BOLTS, NUTS, AND WASHERS SHALL BE HOT-DIP GALVANIZED PER ASTM A153.

PUMP STATION BASIS OF DESIGN:

MECHANICAL:

PUMP OPERATING CONDITIONS RATED: 2,777 GPM; 103 FT; REDUCED SPEED; 1,500 GPM: 79 FT
NUMBER OF PUMPS: 2
SIZE OF PUMP (HP): 100 HP
PUMP INFO: IMPELLER TYPE CUTTER CENTRIFUGAL:
SPEED 1,780 RPM; EFFICIENCY 75% AT DESIGN CONDITION AND FULL SPEED; VFD
CONFIGURATION: DUTY/STAND BY
TYPE OF STATION: CONCRETE DRYWELL/
WET WELL
PUMP SET POINTS:
PUMP OFF = 3.0
LEAD ON = 8.0
HIGH LEVEL ALARM = 10.5
OVERFLOW = 13.5±
PRIMARY POWER SOURCE: SEATTLE CITY LIGHT
BACKUP POWER SOURCE: STANDBY GENERATOR
NPSHA: 35FT
UTILITY POWER: 480V; PHASE 3
FORCE MAIN: SIZE 12-INCH, TYPE DI, LENGTH 770; SIZE 10-INCH, TYPE DI, LENGTH 45
MAXIMUM STATIC HEAD ELEVATION: 77 FT
PRESSURE ZONE: NA
SERVICE AREA: COMBINED
STORAGE: 4,500± GALLONS.

Noah Allen, PE

Digitally signed by Noah Allen, PE
DN: cn=Noah Allen, PE, o=BHC Consultants, LLC, ou, email=noah.allen@bhcconsultants.com, c=US
Date: 2018.12.20 12:09:59 -08'00'

MECHANICAL LEGEND, ABBREVIATIONS, NOTES

M-1

VAULT SERIAL NO.	DATE	MARK	NATURE REVISIONS	MADE	CHK'D	REV'D

S:\Cad\Seattle Public Utilities\17-10503 Mog PS22 Retrofit Design\dwgs\M1-261-1009_P-Mechanical-Notes.dwg
psimon Dec-20-18 11:43am

000-000-0

CDM Smith
14432 SE Eastgate Way
Suite 100
Bellevue, WA 98007
Tel: (425) 519-8300

BHC CONSULTANTS
1601 Fifth Avenue, Suite 500
Seattle, Washington 98101
Tel: 206.505.3400
www.bhcconsultants.com

REVIEWED BY SPU/WATER ENGINEERING ..... 20.....
REVIEWED BY SPU/DRAINAGE ..... 20.....
APPROVED BY SDOT STREET IMPROVEMENT PERMITTING ..... 20.....

APPROVED FOR ADVERTISING
LIZ ALZEER
DEPARTMENT OF FINANCE & ADMINISTRATIVE SERVICES
SEATTLE, WASHINGTON . . . . . 20 . .
BY: . . . . . .
CITY PURCHASING & CONTRACTING SERVICES DIRECTOR

INITIALS AND DATE		
DESIGNED	NZA	12/20/2018
CHECKED	JRG	12/20/2018
DRAWN	AR	12/20/2018
CHECKED	PLS	12/20/2018

INITIALS AND DATE	
REVIEWED:	
DES.	CONST.
SDOT	PROJ. MGR.
RECEIVED	
REVISED AS BUILT	

ALL WORK SHALL BE DONE IN ACCORDANCE WITH THE CITY OF SEATTLE STANDARD PLANS AND SPECIFICATIONS AND OTHER DOCUMENTS CALLED FOR IN SECTION 0-02.3 OF THE PROJECT MANUAL.

NOAH ZEI ALLEN — STATE OF WASHINGTON — 46908 — REGISTERED PROFESSIONAL ENGINEER — 12/20/2018

Seattle Public Utilities

ORDINANCE NO. 125475 PW NO. 2018-064
FUND: DWS
SCALE: NONE

PUMP STATION NO. 22
RETROFIT AND
FORCE MAIN REPLACEMENT

JOB NO. PC C315071 R/W CO

VAULT PLAN NO. 776-474

SHEET 37 OF 71

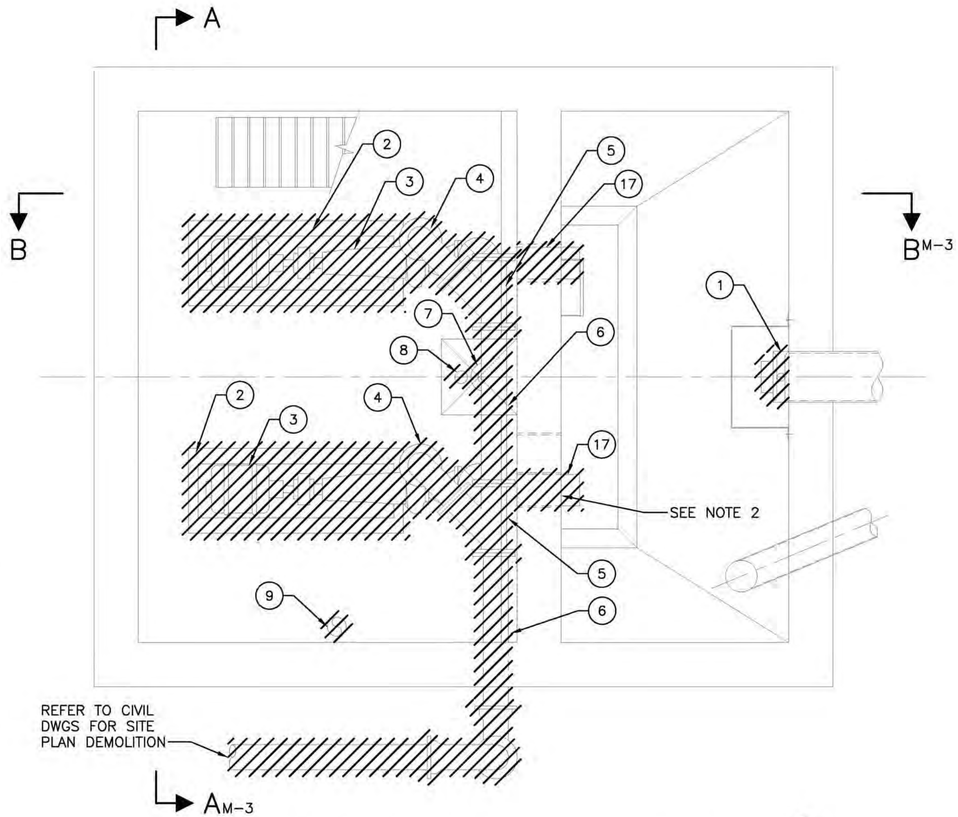

LOWER LEVEL MECHANICAL DEMOLITION PLAN

1/2" = 1'-0"

2 1 0 2 4
SCALE IN FEET

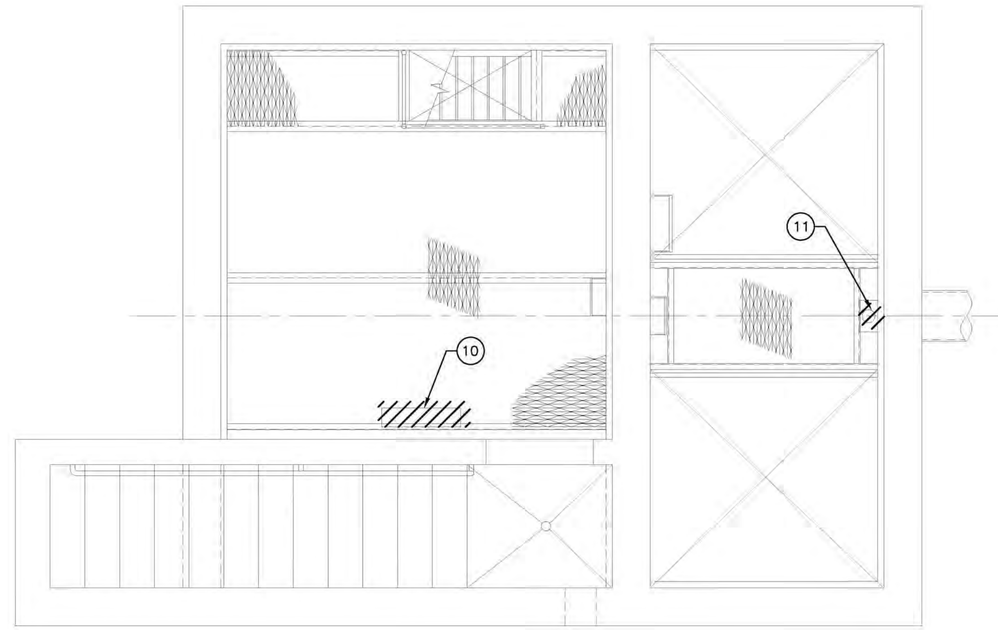

UPPER LEVEL MECHANICAL DEMOLITION PLAN

1/2" = 1'-0"

2 1 0 2 4
SCALE IN FEET

NOTES:

1. REFER TO CIVIL, STRUCTURAL, AND ELECTRICAL DRAWINGS FOR CIVIL, STRUCTURAL, AND ELECTRICAL DEMOLITION PLANS.
2. REFER TO STRUCTURAL DRAWINGS FOR REMOVAL OF PIPE PENETRATIONS.
3. CONTRACTOR SHALL PROTECT EQUIPMENT IDENTIFIED TO BE SALVAGED FROM DAMAGE AND SHALL COORDINATE DELIVERY OF SALVAGED ITEMS TO CITY SURPLUS WITH THE RESIDENT ENGINEER.

EQUIPMENT REMOVAL LIST

ITEM NUMBER	DESCRIPTION	REMARKS
1	16" FLANGE FRAME SLUICE GATE	
2	CONCRETE PUMP BASE	
3	20 HP WASTEWATER PUMP	
4	8" 90° BEND (DI, FL x FL)	
5	8" WYE (DI, FL x FL)	
6	8" DI PIPE	
7	1/2 HP SUMP PUMP	
8	1.5" SUMP PUMP DISCHARGE PIPE (GALVANIZED IRON PIPE)	
9	6" PVC VENT PIPE	

EQUIPMENT REMOVAL LIST

ITEM NUMBER	DESCRIPTION	REMARKS
10	1/4 HP VENT FAN AND MOTOR	
11	SLUICE GATE MOTOR ACTUATOR	
12	8" PLUG VALVE (FL x FL)	
13	8" CHECK VALVE (FL x FL)	
14	SLUICE GATE RISING STEM	
15	10" GATE VALVE (FL x FL)	
16	PIPE SUPPORT BRACKETS	
17	REMOVE EXISTING SUCTION PIPE	
18	8" SPOOL (DI, FL x FL)	

EQUIPMENT REMOVAL LIST

ITEM NUMBER	DESCRIPTION	REMARKS
19	8" x 6" REDUCER (DI, FL x FL)	

PUMP STATION
MECHANICAL DEMOLITION PLAN
M-2

VAULT SERIAL NO.	DATE	MARK	NATURE REVISIONS	MADE	CHK'D	REV'D

S:\Cad\Seattle Public Utilities\17-10503 Mag PS22 Retrofit Design\dwgs\M2-261-1009_P-Mechanical-Demo Plan.dwg
psimon Dec-20-18 11:44am

CDM Smith
14432 SE Eastgate Way
Suite 100
Bellevue, WA 98007
Tel: (425) 519-8300

BHC CONSULTANTS
1601 Fifth Avenue, Suite 500
Seattle, Washington 98101
Tel: 206.505.3400
www.bhcconsultants.com

REVIEWED BY SPU/WATER ENGINEERING ..... 20.....
REVIEWED BY SPU/DRAINAGE ..... 20.....
APPROVED BY SDOT STREET IMPROVEMENT PERMITTING ..... 20.....

APPROVED FOR ADVERTISING
LIZ ALZEER
DEPARTMENT OF FINANCE & ADMINISTRATIVE SERVICES
SEATTLE, WASHINGTON . . . . . 20 . .
BY: . . . . . .
CITY PURCHASING & CONTRACTING SERVICES DIRECTOR

INITIALS AND DATE		
DESIGNED	NZA	12/20/2018
CHECKED	JRG	12/20/2018
DRAWN	SO	12/20/2018
CHECKED	PLS	12/20/2018

INITIALS AND DATE	
REVIEWED:	
DES.	CONST.
SDOT	PROJ. MGR.
RECEIVED	
REVISED AS BUILT	

ALL WORK SHALL BE DONE IN ACCORDANCE WITH THE CITY OF SEATTLE STANDARD PLANS AND SPECIFICATIONS AND OTHER DOCUMENTS CALLED FOR IN SECTION 0-02.3 OF THE PROJECT MANUAL.

NOAH ZEI ALLEN
STATE OF WASHINGTON
REGISTERED
PROFESSIONAL ENGINEER
12/20/2018

Seattle Public Utilities
ORDINANCE NO. 125475 PW NO. 2018-064
FUND: DWS
SCALE: 1/2" = 1'-0"

PUMP STATION NO. 22 RETROFIT AND FORCE MAIN REPLACEMENT

JOB NO. PC C315071 R/W CO
VAULT PLAN NO. 776-474
SHEET 38 OF 71

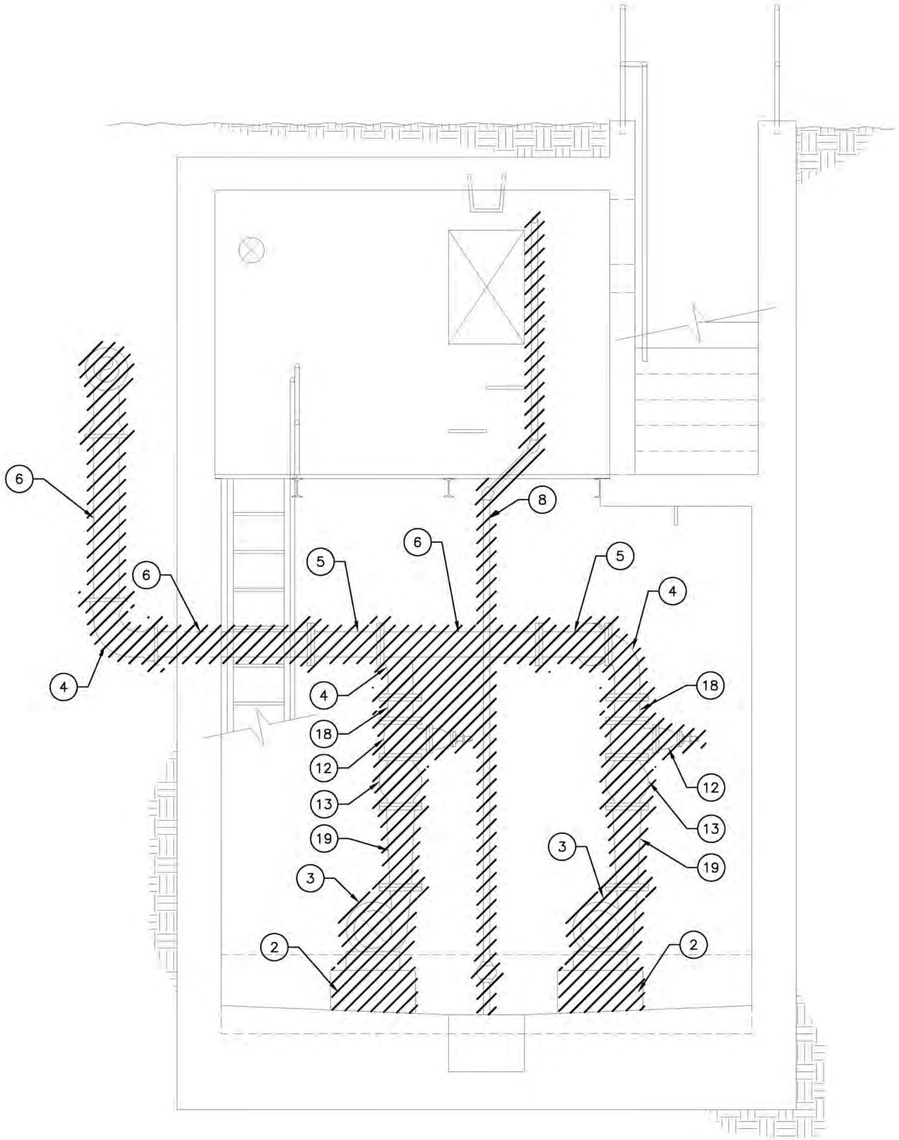

SECTION A M–2
1/2" = 1'–0"

2 1 0 2 4
SCALE IN FEET

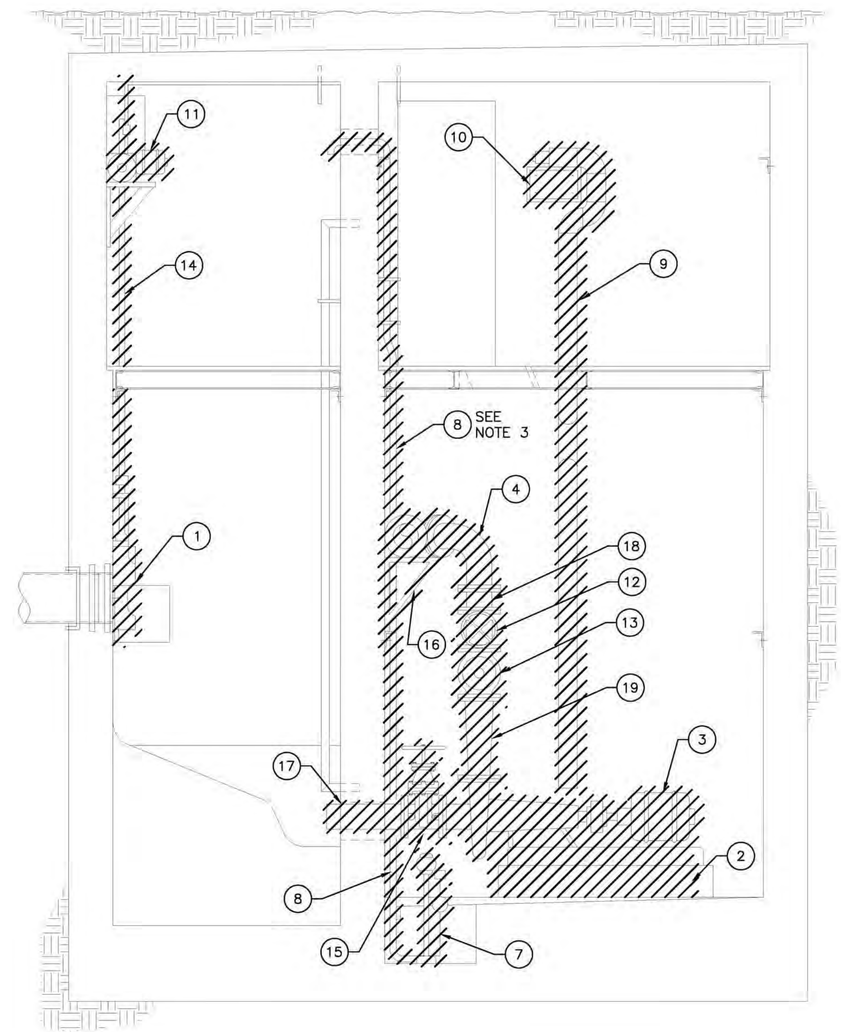

SECTION B M–2
1/2" = 1'–0"

2 1 0 2 4
SCALE IN FEET

NOTES:

1. EQUIPMENT REMOVAL LIST LOCATED ON DRAWING M–2.
2. CONTRACTOR SHALL TAKE CARE TO PROTECT EQUIPMENT IDENTIFIED TO BE SALVAGED FROM DAMAGE AND SHALL COORDINATE DELIVERY OF SALVAGED ITEMS TO CITY SURPLUS WITH THE RESIDENT ENGINEER.
3. REMOVE ALL EXISTING SUMP PUMP DISCHARGE PIPING.

PUMP STATION MECHANICAL
DEMOLITION SECTIONS
M–3

VAULT SERIAL NO.	DATE	MARK	NATURE REVISIONS	MADE	CHK'D	REV'D

S:\Cad\Seattle Public Utilities\17-10503 Mag PS22 Retrofit Design\dwgs\M3-261-1009_P-Mechanical-Demo-Sections.dwg
paimon Dec-20-18 11:45am

000-000-0

CDM Smith
14432 SE Eastgate Way
Suite 100
Bellevue, WA 98007
Tel: (425) 519-8300

BHC CONSULTANTS
1601 Fifth Avenue, Suite 500
Seattle, Washington 98101
Tel: 206.505.3400
www.bhcconsultants.com

REVIEWED BY SPU/WATER ENGINEERING ..... 20.....
REVIEWED BY SPU/DRAINAGE ..... 20.....
APPROVED BY SDOT STREET IMPROVEMENT PERMITTING ..... 20.....

APPROVED FOR ADVERTISING
LIZ ALZEER
DEPARTMENT OF FINANCE & ADMINISTRATIVE SERVICES
SEATTLE, WASHINGTON . . . . . 20 . .
BY: . . . . . .
CITY PURCHASING & CONTRACTING SERVICES DIRECTOR

INITIALS AND DATE		
DESIGNED	NZA	12/20/2018
CHECKED	JRG	12/20/2018
DRAWN	SO	12/20/2018
CHECKED	PLS	12/20/2018

INITIALS AND DATE	
REVIEWED:	
DES.	CONST.
SDOT	PROJ. MGR.
RECEIVED	
REVISED AS BUILT	

ALL WORK SHALL BE DONE IN ACCORDANCE WITH THE CITY OF SEATTLE STANDARD PLANS AND SPECIFICATIONS AND OTHER DOCUMENTS CALLED FOR IN SECTION 0-02.3 OF THE PROJECT MANUAL.

NOAH ZEI ALLEN
STATE OF WASHINGTON
REGISTERED PROFESSIONAL ENGINEER
12/20/2018

Seattle Public Utilities
ORDINANCE NO. 125475 PW NO. 2018-064
FUND: DWS
SCALE: 1/2" = 1'–0"

PUMP STATION NO. 22 RETROFIT AND FORCE MAIN REPLACEMENT

JOB NO. PC C315071 R/W CO
VAULT PLAN NO. 776-474
SHEET 39 OF 71

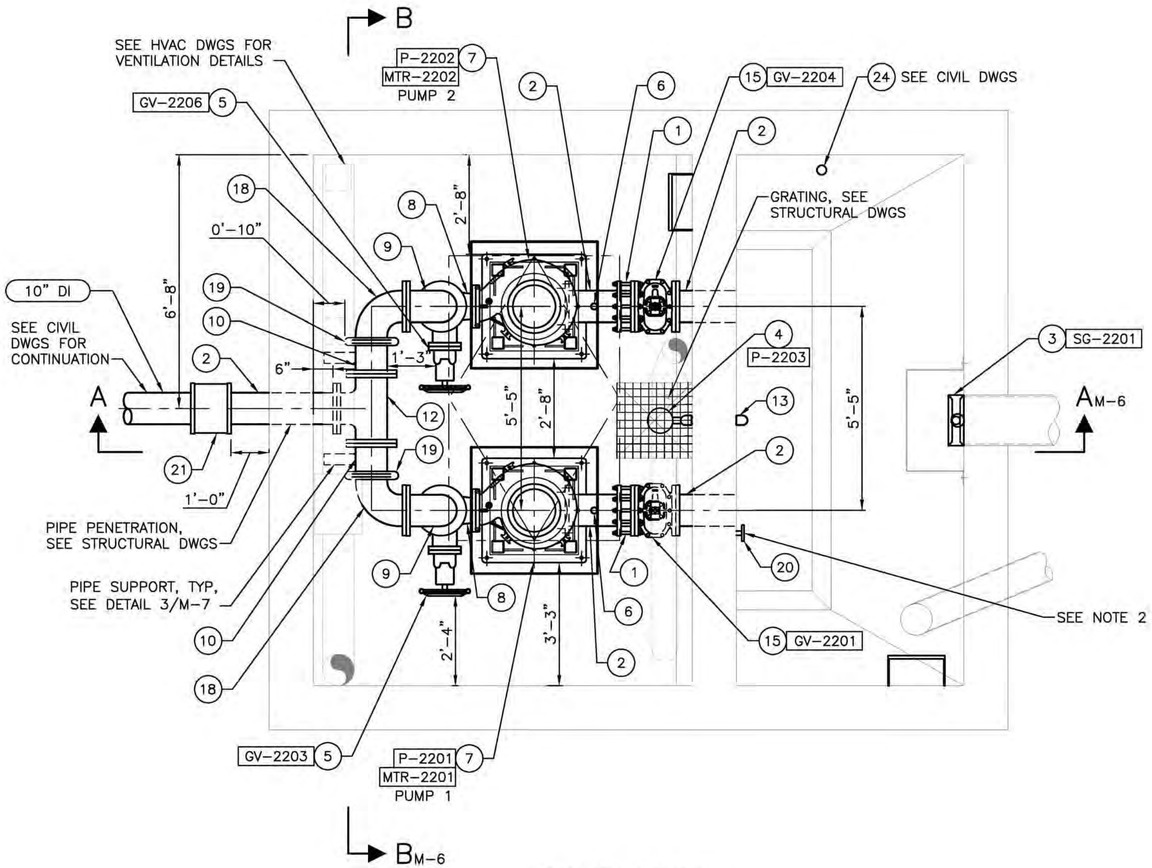

LOWER LEVEL PLAN

1/2" = 1'-0"

2 1 0 2 4

SCALE IN FEET

MECHANICAL PLAN KEYNOTES

ITEM NUMBER	DESCRIPTION	REMARKS
1	10" RESTRAINED FLANGED COUPLING ADAPTER (RFCA)	
2	10" PIPE SPOOL (DI, PE x FL)	SEE STRUCTURAL DWGS FOR PENETRATION DETAIL
3	16" SST NON-RISING STEM SLUICE GATE	
4	1/2 HP SUMP PUMP	
5	10" DOUBLE-DISC GATE VALVE (FL X FL) W/CHAINWHEEL	
6	1/2" BALL CORP WITH FNPT	DIRECT TAP INTO DI PIPE
7	100 HP WASTEWATER PUMP	
8	10" x 8" REDUCING DISCHARGE ELBOW (DI, FL X FL)	FLANGED BASE BEND
9	10" 90° BEND (DI, FL X FL)	
10	10" PIPE SPOOL (DI, FL X GRV)	
11	8" X 10" REDUCING BASE ELBOW (DI, FL X FL)	WITH CLEANOUT PORT, PROVIDED BY PUMP MFR
12	10" TEE (DI, FL X FL)	
13	1.5" SCHEDULE 80 PVC PIPE	PROVIDE THREADED UNIONS AT VALVE CONNECTIONS
14	NON-RISING STEM (SST) W/NUT OPERATOR	
15	10" DOUBLE – DISC GATE VALVE (FL X FL) W/HANDWHEEL	
16	INTEGRAL PUMP BASE	INTEGRAL WITH REDUCING BASE ELBOW
17	10" LEVER AND SPRING SWING CHECK VALVE	
18	10" 90° BEND (DI, FL X GRV)	
19	10" VICTAULIC GROOVED COUPLING	
20	STAFF GAUGE	SEE NOTE 2
21	10" RESTRAINED FLEXIBLE COUPLING	
22	1 1/2" CHECK VALVE	SEE NOTE 5
23	1 1/2" BALL VALVE	SEE NOTE 6
24	3" SCHEDULE 80 PVC PIPE	BYPASS VAULT SUMP DRAIN, PROVIDE HORIZONTAL TEE WITH THREADED PLUG IN WET WELL AT TURN DOWN.

NOTES:

1. REFER TO DRAWING I-1 FOR SET POINTS AND ELEVATIONS.
2. PROVIDE 16-FOOT OREGON RULE CO. MODEL IFXW, OR APPROVED EQUAL STAFF GAUGE. INSTALL STAFF GAUGE FACING WET WELL ACCESS HATCH. INSTALL WITH "ZERO" MARKING AT LOWEST POINT OF WET WELL SUMP. GAUGE SHALL EXTEND TO CEILING.
3. REFER TO DETAIL 1/M-7 AND THE SPECIFICATIONS FOR SEISMIC BRACING LIMITS.
4. CONTRACTOR SHALL FIELD VERIFY ALL DIMENSIONS AND SUBMIT MECHANICAL SHOP DRAWINGS, DRAWN TO SCALE, PRIOR TO PROCUREMENT OF PIPING, PER THE SPECIFICATIONS.
5. PROVIDE 1 1/2" THREADED BRASS CHECK VALVE: NIBCO T-413-Y-LF, APOLLO 161T-LF, OR APPROVED EQUAL.
6. PROVIDE 1 1/2" THREADED BRASS BALL VALVE: APOLLO 32-100 SERIES, MILWAUKEE VALVE BA-490 SERIES, OR APPROVED EQUAL.

PUMP STATION MECHANICAL PLAN–
LOWER FLOOR
M-4

VAULT SERIAL NO.	DATE	MARK	NATURE REVISIONS	MADE	CHK'D	REV'D

S:\Cad\Seattle Public Utilities\17-10503 Mcg PS22 Retrofit Design\dwgs\M4-261-1009_P-Mechanical-Lower Plan.dwg
psimon Dec-20-18 11:45am

CDM Smith
14432 SE Eastgate Way
Suite 100
Bellevue, WA 98007
Tel: (425) 519-8300

BHC CONSULTANTS
1601 Fifth Avenue, Suite 500
Seattle, Washington 98101
Tel: 206.505.3400
www.bhcconsultants.com

REVIEWED BY SPU/WATER ENGINEERING ..... 20.....
REVIEWED BY SPU/DRAINAGE ..... 20.....
APPROVED BY SDOT STREET IMPROVEMENT PERMITTING ..... 20.....

APPROVED FOR ADVERTISING
LIZ ALZEER
DEPARTMENT OF FINANCE & ADMINISTRATIVE SERVICES
SEATTLE, WASHINGTON . . . . . 20 . .
BY: . . . . . .
CITY PURCHASING & CONTRACTING SERVICES DIRECTOR

INITIALS AND DATE		
DESIGNED	NZA	12/20/2018
CHECKED	JRG	12/20/2018
DRAWN	ASC	12/20/2018
CHECKED	PLS	12/20/2018

INITIALS AND DATE	
REVIEWED:	
DES.	CONST.
SDOT	PROJ. MGR.
RECEIVED	
REVISED AS BUILT	

ALL WORK SHALL BE DONE IN ACCORDANCE WITH THE CITY OF SEATTLE STANDARD PLANS AND SPECIFICATIONS AND OTHER DOCUMENTS CALLED FOR IN SECTION 0-02.3 OF THE PROJECT MANUAL.

NOAH ZEI ALZEER
STATE OF WASHINGTON
36000
REGISTERED PROFESSIONAL ENGINEER
12/20/2018

Seattle Public Utilities
ORDINANCE NO. 125475 PW NO. 2018-064
FUND: DWS
SCALE: 1/2" = 1'-0"

PUMP STATION NO. 22 RETROFIT AND FORCE MAIN REPLACEMENT

JOB NO. PC C315071
R/W
CO
VAULT PLAN NO. 776-474
SHEET 40 OF 71

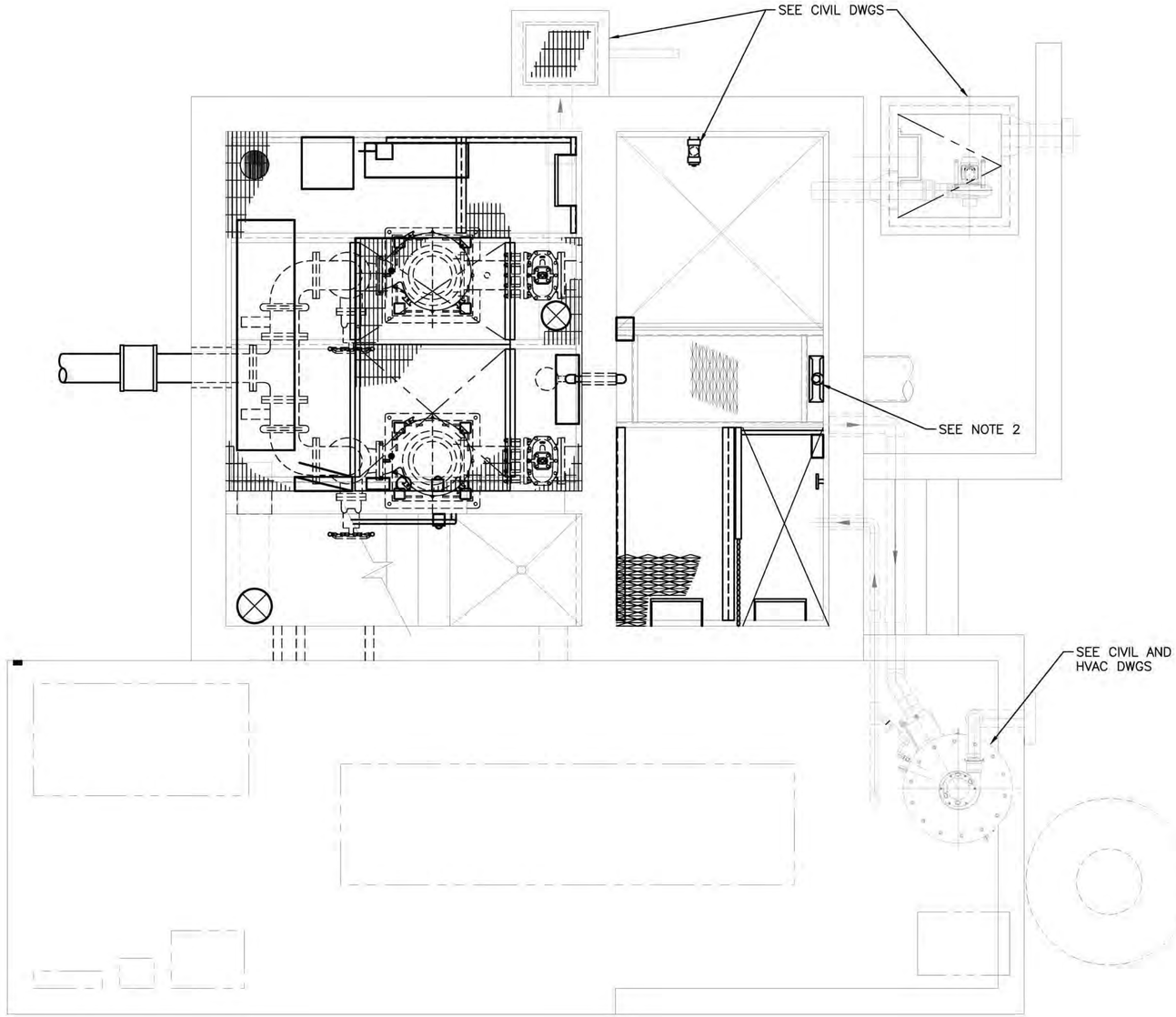

NOTE:

1. REFER TO DRAWING M-4 FOR MECHANICAL KEYNOTES PLAN.
2. OPERATING NUT FOR SERVICE GATE IS LOCATED WITHIN A CLEAN OUT AT GRADE, SEE CIVIL AND STRUCTURAL DRAWINGS.

UPPER LEVEL
PLAN
1/2" = 1'-0"

N

PUMP STATION MECHANICAL PLAN–
UPPER FLOOR
M–5

VAULT SERIAL NO.	DATE	MARK	NATURE REVISIONS	MADE	CHK'D	REV'D

S:\Cad\Seattle Public Utilities\17-10503 Mag PS22 Retrofit Design\Dwgs\M5-261-1009_P-Mechanical-Upper Plan.dwg
psimon Dec-20-18 11:47am

000-000-0

CDM Smith
14432 SE Eastgate Way
Suite 100
Bellevue, WA 98007
Tel: (425) 519-8300

BHC CONSULTANTS
1601 Fifth Avenue, Suite 500
Seattle, Washington 98101
Tel: 206.505.3400
www.bhcconsultants.com

REVIEWED BY SPU/WATER ENGINEERING ..... 20.....
REVIEWED BY SPU/DRAINAGE ..... 20.....
APPROVED BY SDOT STREET IMPROVEMENT PERMITTING ..... 20.....

APPROVED FOR ADVERTISING
LIZ ALZEER
DEPARTMENT OF FINANCE & ADMINISTRATIVE SERVICES
SEATTLE, WASHINGTON . . . . . 20 . .
BY: . . . . . .
CITY PURCHASING & CONTRACTING SERVICES DIRECTOR

INITIALS AND DATE		
DESIGNED	NZA	12/20/2018
CHECKED	JRG	12/20/2018
DRAWN	ASC	12/20/2018
CHECKED	PLS	12/20/2018

INITIALS AND DATE	
REVIEWED:	
DES.	CONST.
SDOT	PROJ. MGR.
RECEIVED	
REVISED AS BUILT	

ALL WORK SHALL BE DONE IN ACCORDANCE WITH THE CITY OF SEATTLE STANDARD PLANS AND SPECIFICATIONS AND OTHER DOCUMENTS CALLED FOR IN SECTION 0-02.3 OF THE PROJECT MANUAL.

NOAH ZEI ALZEER
STATE OF WASHINGTON
REGISTERED
PROFESSIONAL ENGINEER
12/20/2018

Seattle Public Utilities
ORDINANCE NO. 125475 PW NO. 2018-064
FUND: DWS
SCALE: 1/2" = 1'-0"

PUMP STATION NO. 22 RETROFIT AND FORCE MAIN REPLACEMENT

JOB NO. PC C315071 R/W CO

VAULT PLAN NO. 776-474

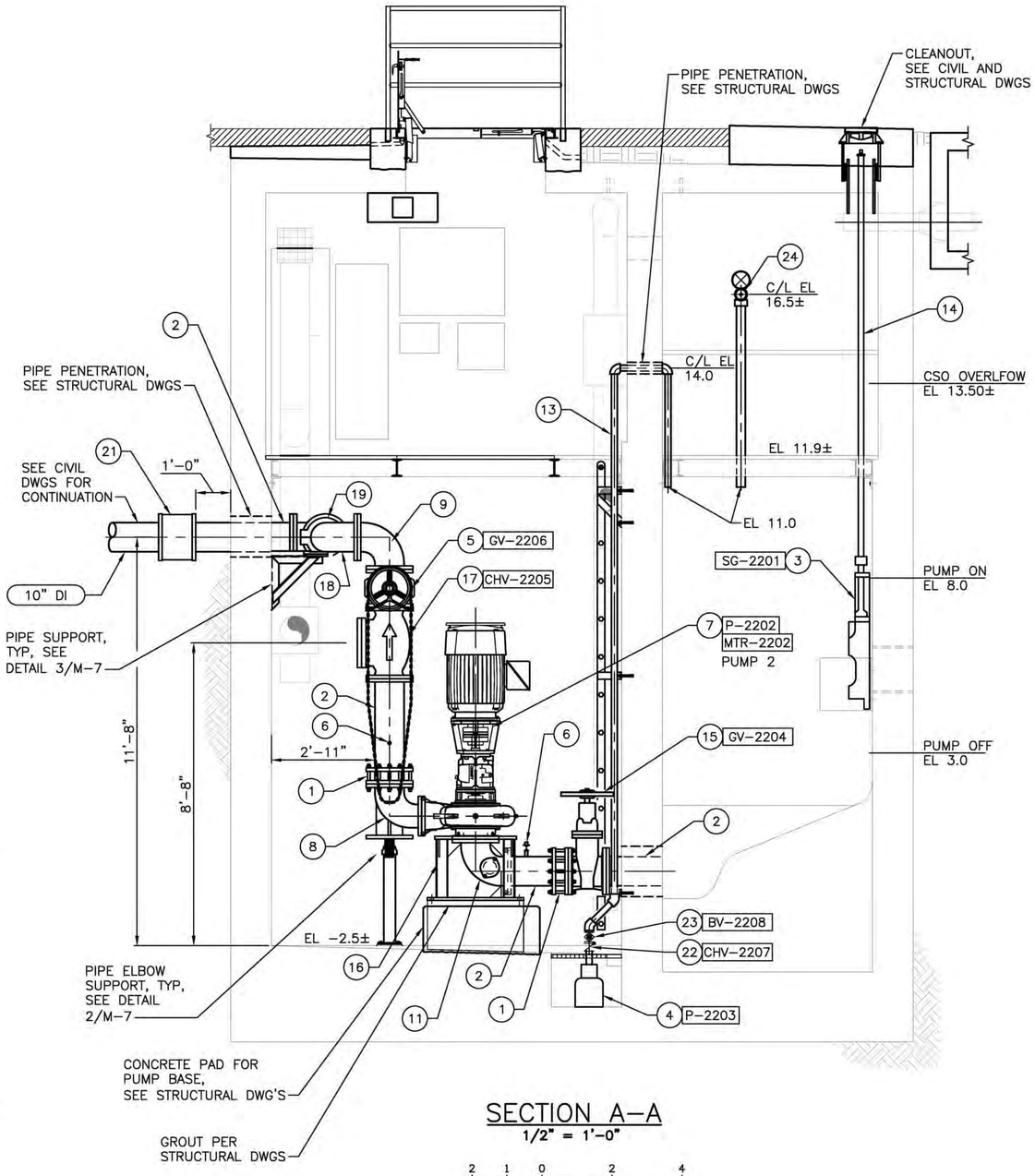

SECTION A–A

1/2" = 1'-0"

2 1 0 2 4

SCALE IN FEET

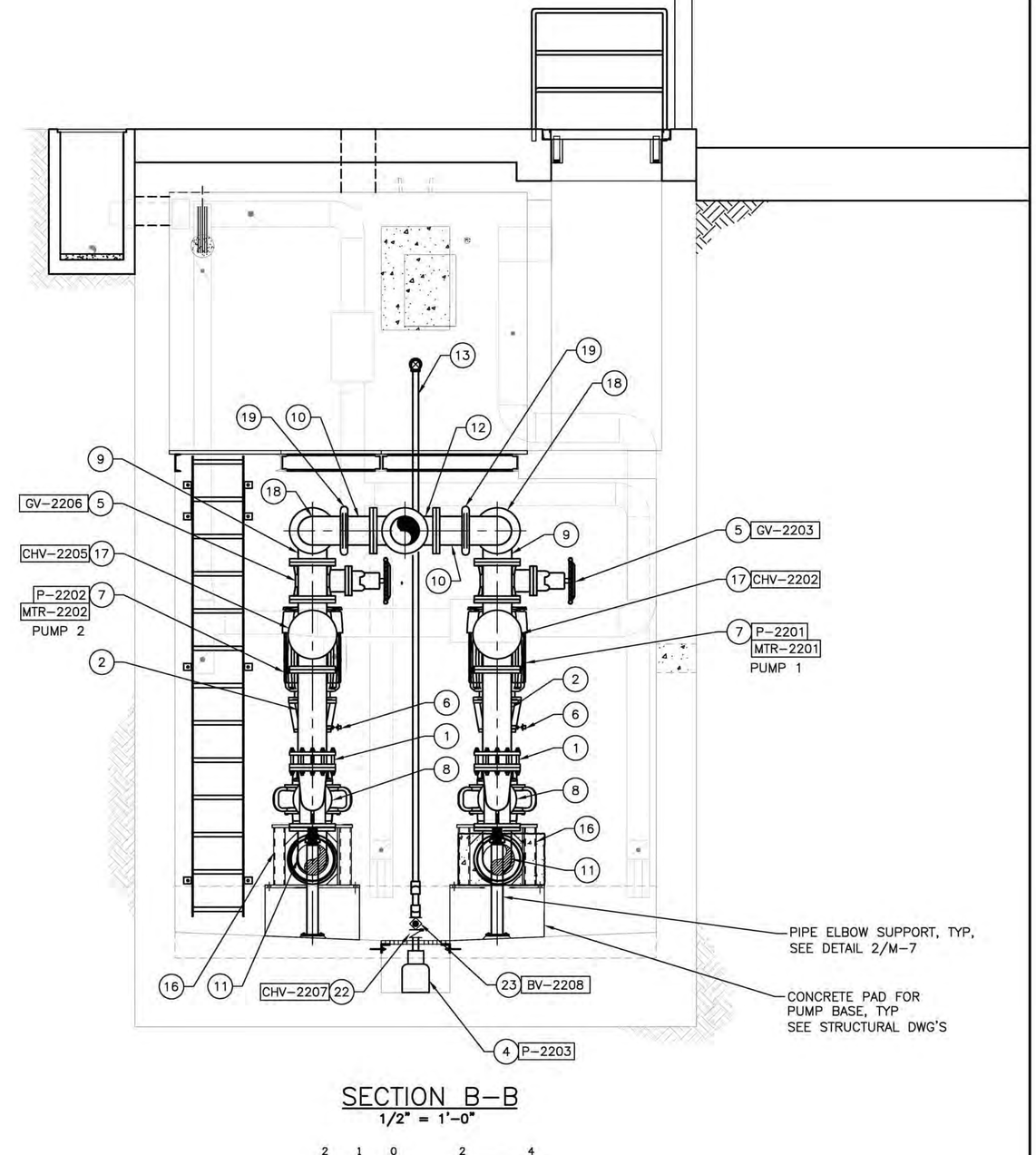

SECTION B–B

1/2" = 1'-0"

2 1 0 2 4

SCALE IN FEET

NOTE:

1. REFER TO DRAWING M-4 FOR MECHANICAL KEYNOTES.

PUMP STATION–SECTIONS M–6

MARK	DATE	REVISIONS	MADE	CHK'D	REV'D

VAULT SERIAL NO. 000-000-0

S:\Cad\Seattle Public Utilities\17-10503 Mag PS22 Retrofit Design\dwgs\M6-261-1009_P-Mechanical-Sections1.dwg
paimon Dec-20-18 11:47am

CDM Smith
14432 SE Eastgate Way
Suite 100
Bellevue, WA 98007
Tel: (425) 519-8300

BHC CONSULTANTS
1601 Fifth Avenue, Suite 500
Seattle, Washington 98101
Tel: 206.505.3400
www.bhcconsultants.com

REVIEWED BY SPU/WATER ENGINEERING ..... 20.....

REVIEWED BY SPU/DRAINAGE ..... 20.....

APPROVED BY SDOT STREET IMPROVEMENT PERMITTING ..... 20.....

APPROVED FOR ADVERTISING
LIZ ALZEER
DEPARTMENT OF FINANCE & ADMINISTRATIVE SERVICES
SEATTLE, WASHINGTON . . . . . 20 . . .

BY: . . . . . .
CITY PURCHASING & CONTRACTING SERVICES DIRECTOR

INITIALS AND DATE		
DESIGNED	NZA	12/20/2018
CHECKED	JRG	12/20/2018
DRAWN	SO	12/20/2018
CHECKED	PLS	12/20/2018

INITIALS AND DATE	
REVIEWED:	
DES.	CONST.
SDOT	PROJ. MGR.
RECEIVED	
REVISED AS BUILT	

ALL WORK SHALL BE DONE IN ACCORDANCE WITH THE CITY OF SEATTLE STANDARD PLANS AND SPECIFICATIONS AND OTHER DOCUMENTS CALLED FOR IN SECTION 0-02.3 OF THE PROJECT MANUAL.

NOAH ZEI ALZER · STATE OF WASHINGTON · REGISTERED PROFESSIONAL ENGINEER · 12/20/2018

Seattle Public Utilities

ORDINANCE NO. 125475 PW NO. 2018-064
FUND: DWS
SCALE: 1/2" = 1'-0"

PUMP STATION NO. 22 RETROFIT AND FORCE MAIN REPLACEMENT

JOB NO. PC C315071 R/W CO

VAULT PLAN NO. 776-474

SHEET 42 OF 71

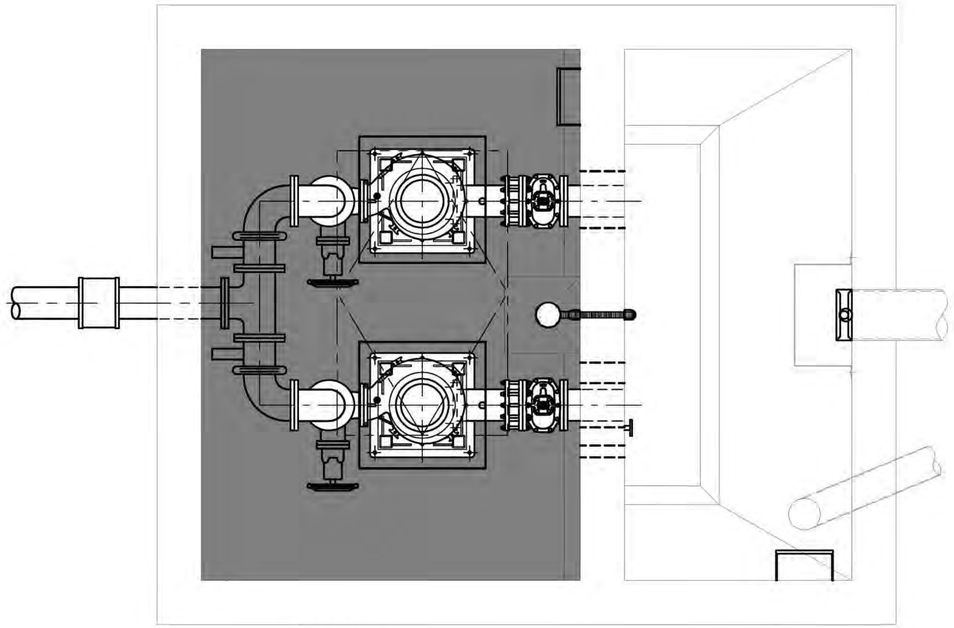

NOTE:

1. WHEN LOCATING SEISMIC BRACING, CONTRACTORS SHALL NOT LOCATE BRACES IN THE SHADED AREAS FROM FINISHED FLOOR TO 6'–6" ABOVE FINISHED FLOOR, UNLESS OTHERWISE APPROVED BY AN ENGINEER. THESE AREAS ARE TO REMAIN CLEAR AND OPEN FOR ACCESS.

N

DETAIL – SEISMIC BRACING LIMITS (1 / M–4)
NTS

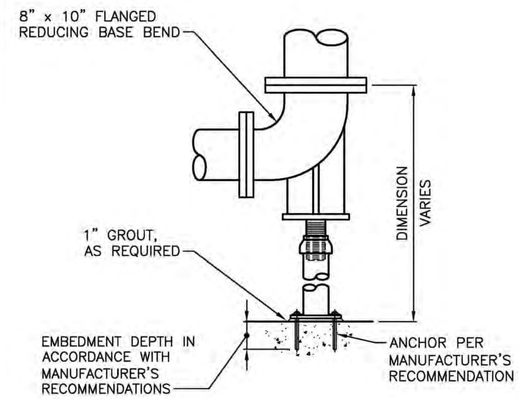

NOTE:

1. TO ENSURE PROPER SUPPORT AND STABILITY, AFTER FINAL HEIGHT ADJUSTMENT IS ATTAINED, APPLY TACK WELDS TO BOTH SUPPORT CUPS AND EXTENSION PIPE.
2. HOT DIP GALVANIZE ALL PARTS AFTER FABRICATION.
3. TOUCH–UP GALVANIZE BURNS AND CUTS.

DETAIL – PIPE ELBOW SUPPORT (2 / TYP)
NTS

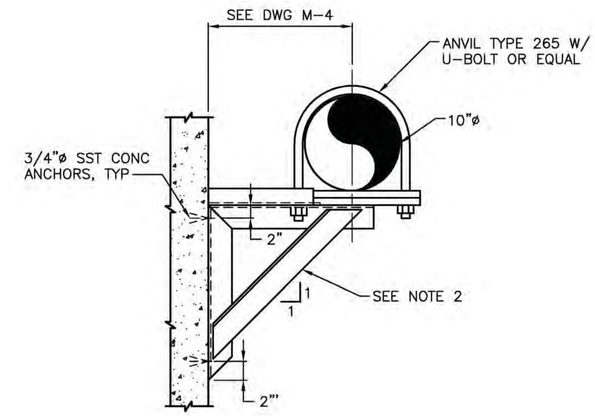

NOTE:

1. ALL SUPPORT MATERIAL TO BE TYPE 316L STAINLESS STEEL. ALL FASTENERS (NUTS, BOLTS, ANCHORS, WASHERS, ETC.) SHALL BE TYPE 316 OR 316L STAINLESS STEEL.
2. CONTRACTOR TO PROVIDE PIPE SUPPORT DESIGN STAMPED BY ENGINEER LICENSED IN WASHINGTON STATE, PER SPECIFICATIONS.

DETAIL – PIPE SUPPORT (3 / TYP)
NTS

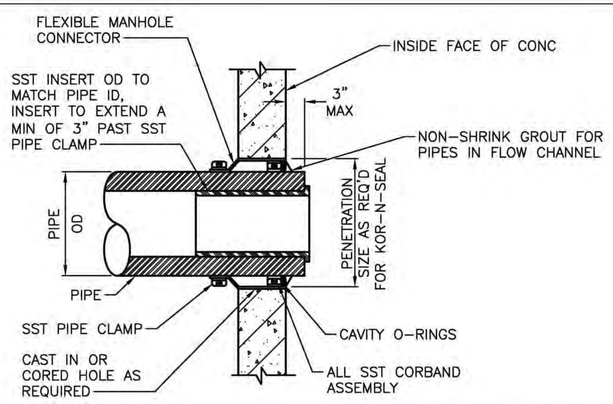

NOTE:

1. CONTRACTOR TO VERIFY FLEXIBLE MANHOLE CONNECTOR ATTACHES TO PIPE WITHIN THE PIPE LENGTH FITTED WITH SST INSERT.
2. PENETRATIONS TO EXISTING STRUCTURES SHALL BE CORED TO THE APPROPRIATE HOLE SIZE TO ALLOW FOR FLEXIBLE MANHOLE CONNECTOR.

DETAIL – FLEXIBLE WALL PENETRATION (4 / TYP)
NTS

PUMP STATION – DETAILS
M–7

VAULT SERIAL NO.	DATE	MARK	NATURE REVISIONS	MADE	CHK'D	REV'D

S:\Cad\Seattle Public Utilities\17-10503 Mag PS22 Retrofit Design\dwgs\M7-261-1009_P-Mechanical-Details.dwg
palmon Dec-20-18 11:49am

000-000-0

CDM Smith
14432 SE Eastgate Way
Suite 100
Bellevue, WA 98007
Tel: (425) 519-8300

BHC CONSULTANTS
1601 Fifth Avenue, Suite 500
Seattle, Washington 98101
Tel: 206.505.3400
www.bhcconsultants.com

REVIEWED BY SPU/WATER ENGINEERING ..... 20.....
REVIEWED BY SPU/DRAINAGE ..... 20.....
APPROVED BY SDOT STREET IMPROVEMENT PERMITTING ..... 20.....

APPROVED FOR ADVERTISING
LIZ ALZEER
DEPARTMENT OF FINANCE & ADMINISTRATIVE SERVICES
SEATTLE, WASHINGTON . . . . . 20 . . .
BY: . . . . . .
CITY PURCHASING & CONTRACTING SERVICES DIRECTOR

INITIALS AND DATE		INITIALS AND DATE	
DESIGNED NZA	12/20/2018	REVIEWED: DES.	CONST.
CHECKED JRG	12/20/2018	SDOT	PROJ. MGR.
DRAWN ASC	12/20/2018	RECEIVED	
CHECKED PLS	12/20/2018	REVISED AS BUILT	

ALL WORK SHALL BE DONE IN ACCORDANCE WITH THE CITY OF SEATTLE STANDARD PLANS AND SPECIFICATIONS AND OTHER DOCUMENTS CALLED FOR IN SECTION 0–02.3 OF THE PROJECT MANUAL.

NOAH ZEI ALLEN
STATE OF WASHINGTON
46906
REGISTERED PROFESSIONAL ENGINEER
12/20/2018

Seattle Public Utilities
ORDINANCE NO. 125475 PW NO. 2018–064
FUND: DWS
SCALE: AS NOTED

PUMP STATION NO. 22 RETROFIT AND FORCE MAIN REPLACEMENT

JOB NO. PC C315071 R/W CO
VAULT PLAN NO. 776–474
SHEET 43 OF 71

VENTILATION LEGEND:

SINGLE LINE DUCTWORK INDICATES VIEW DIMENSION LESS THAN 12 INCHES.

- SUPPLY OR EXHAUST TAKEOFF
- SUPPLY DUCT TURNING TOWARD
- SUPPLY DUCT TURNING AWAY
- EXHAUST DUCT TURNING TOWARD
- EXHAUST DUCT TURNING AWAY
- ROUND DUCT TURNING TOWARD
- ROUND DUCT TURNING AWAY
- TRANSITION
- VD — VOLUME DAMPER
- FD — FIRE DAMPER
- ACCESS DOOR, ACCESS PANEL
- FLEXIBLE CONNECTION
- TV — TURNING VANES
- FLEXIBLE DUCT
- F-1 — EQUIPMENT TAG
- X" EA — DUCT TAG

GENERAL ABBREVIATIONS:

AFF	ABOVE FINISHED FLOOR
AP	ACCESS PANEL
BAL	BALANCING
BLDG	BUILDING
C	CELSIUS
CONN	CONNECT, CONNECTION
DIA	DIAMETER
DIM	DIMENSION
DN	DOWN
DR	DRAIN
DWG	DRAWING
EA	EACH
EFF	EFFICIENCY
ELEC	ELECTRICAL
ENT	ENTERING
EXP	EXPOSED
FLR	FLOOR
FT	FEET, FOOT, FEET OF WATER (PRESS)
GAL	GALLON
HOA	HAND OFF AUTOMATIC
IBC	INTERNATIONAL BUILDING CODE
IMC	INTERNATIONAL MECHANICAL CODE
IN	INCH
KW	KILOWATT
KWH	KILOWATT HOUR
MECH	MECHANICAL, MECHANICAL CONTRACTOR
MFR	MANUFACTURER
MTD	MOUNTED
MTG	MOUNTING
N	NORTH
NA	NOT APPLICABLE
NC	NOISE CRITERION CURVE
NFPA	NATIONAL FIRE PROTECTION ASSOCIATION
NTS	NOT TO SCALE
PH	PHASE
POC	POINT OF CONNECTION
QTY	QUANTITY
R	RADIUS, RETURN, RISER
REQD	REQUIRED
SECT	SECTION
SF	SQUARE FEET
SST	STAINLESS STEEL
TEMP	TEMPERATURE
THRU	THROUGH
TYP	TYPICAL
UBC	UNIFORM BUILDING CODE
V	VOLT
VAR	VARIABLE
W/	WITH
W/O	WITHOUT
WT	WEIGHT

HVAC ABBREVIATIONS:

BDD	BACKDRAFT DAMPER
BHP	BRAKE HORSEPOWER
CFM	CUBIC FEET PER MINUTE
COND	CONDENSATE
DMPR	DAMPER
DB	DRY BULB TEMPERATURE (°F)
DB(A)	DECIBEL A
EA	EXHAUST AIR
EF	EXHAUST FAN
EG	EXHAUST GRILLE
FSL	FLOW SWITCH LOW
FPM	FEET PER MINUTE
GALV	GALVANIZED
GR	GRILLE
IMC	INTERNATIONAL MECHANICAL CODE
MA	MAKE-UP AIR
OA	OUTSIDE AIR
OAT	OUTSIDE AIR TEMPERATURE
RET	RETURN
SA	SUPPLY AIR
SF	SUPPLY FAN
SG	SUPPLY GRILLE
SP	STATIC PRESSURE
T	THERMOSTAT
TG	TRANSFER GRILLE
TSP	TOTAL STATIC PRESSURE

GENERAL NOTES:

UNLESS OTHERWISE NOTED:

1. CONTRACTOR SHALL FIELD VERIFY LAYOUT AND INSTALLATION REQUIREMENTS FOR ACTUAL EQUIPMENT PROVIDED.
2. REFER TO SPECIFICATIONS 018216 FOR SEISMIC RESTRAINT REQUIREMENTS.
3. DUCTWORK SHALL NOT BE USED TO SUPPORT ANY EQUIPMENT SUCH AS PIPES, ELECTRICAL LIGHT FIXTURES, ETC., UNLESS OTHERWISE NOTED.
4. ALL DUCT SIZES ARE INSIDE CLEAR DIMENSIONS.
5. PROVIDE MANUAL BALANCE DAMPERS AT THE BRANCH DUCTS OF DIFFUSERS AND RETURN GRILLES, OR BEFORE EACH DUCT OR RETURN GRILLE. INSTALL DAMPERS AS CLOSE TO MAIN DUCT AS POSSIBLE.
6. ALL HVAC VENT PIPES AND EXHAUST OUTLETS SHALL BE AT LEAST 10-FEET CLEAR OF ALL OUTSIDE AIR INTAKES AND OPERABLE WINDOWS.
7. ALL EQUIPMENT DESIGNED FOR FIXED INSTALLATION SHALL BE SECURELY FASTENED & BRACED IN PLACE PER BUILDING CODE REQUIREMENTS.
8. CONTRACTOR SHALL COORDINATE INSTALLATION TO MAINTAIN LEGAL WORKING CLEARANCES AROUND ALL LINE AND LOW VOLTAGE EQUIPMENT.
9. THE DRAWINGS MAY NOT SHOW THE EXACT ROUTING OR LOCATION OF UTILITIES AND/OR EXACT ROUTING MAY HAVE CONFLICTS WITH OTHER TRADES AND BUILDING STRUCTURE OR ARCHITECTURAL FEATURES.

HVAC LEGEND, ABBREVIATIONS, AND GENERAL NOTES
H-1

VAULT SERIAL NO.	DATE	MARK	NATURE REVISIONS	MADE	CHK'D	REV'D

S:\Cad\Seattle Public Utilities\17-10503 Mag PS22 Retrofit Design\dwgs\H1-261-1009_P-HVAC-TABLES.dwg
acariaso Dec-20-18 1:07pm

CDM Smith
14432 SE Eastgate Way
Suite 100
Bellevue, WA 98007
Tel: (425) 519-8300

BHC CONSULTANTS
1601 Fifth Avenue, Suite 500
Seattle, Washington 98101
Tel: 206.505.3400
www.bhcconsultants.com

REVIEWED BY SPU/WATER ENGINEERING ..... 20.....
REVIEWED BY SPU/DRAINAGE ..... 20.....
APPROVED BY SDOT STREET IMPROVEMENT PERMITTING ..... 20.....

APPROVED FOR ADVERTISING
LIZ ALZEER
DEPARTMENT OF FINANCE & ADMINISTRATIVE SERVICES
SEATTLE, WASHINGTON . . . . . 20 . .
BY: . . . . . .
CITY PURCHASING & CONTRACTING SERVICES DIRECTOR

INITIALS AND DATE		
DESIGNED	JF	12/20/2018
CHECKED	JRG	12/20/2018
DRAWN	GOC	12/20/2018
CHECKED	PLS	12/20/2018

INITIALS AND DATE	
REVIEWED:	
DES.	CONST.
SDOT	PROJ. MGR.
RECEIVED	
REVISED AS BUILT	

ALL WORK SHALL BE DONE IN ACCORDANCE WITH THE CITY OF SEATTLE STANDARD PLANS AND SPECIFICATIONS AND OTHER DOCUMENTS CALLED FOR IN SECTION 0-02.3 OF THE PROJECT MANUAL.

JOHN FRECH — STATE OF WASHINGTON — 16853 — REGISTERED PROFESSIONAL ENGINEER — 2018

Seattle Public Utilities
ORDINANCE NO. 125475 PW NO. 2018-064
FUND: DWS
SCALE: NONE

PUMP STATION NO. 22 RETROFIT AND FORCE MAIN REPLACEMENT

JOB NO. PC C315071 R/W CO
VAULT PLAN NO. 776-474
SHEET 44 OF 71

FAN SCHEDULE

MARK	LOCATION	SERVICE	FAN				ELECTRICAL							SOUND LEVEL (dB(A)(3)	BASIN OF DESIGN	NOTES
			TYPE	CFM	ESP (IN)	MOTOR RPM	SPEED VARIABLE/CONSTANT	HP	V	ø	HZ	MOTOR ENCLOSURE	CLASSIFICATION			
SF-2210	DRY WELL	BUILDING	INLINE	410	0.6	1,725	VARIABLE	0.25	120	1	60	ODP	UNCLASSIFIED	56	GREENHECK SQ-99-VG	1, 2, 3, 4
EF-2211	DRY WELL	BUILDING	INLINE	410	0.6	1,725	VARIABLE	0.25	120	1	60	ODP	UNCLASSIFIED	56	GREENHECK SQ-99-VG	1, 2, 3, 4
SF-2220	IN VAULT	WET WELL	CENTRIFUGAL	100	0.85	1,750	CONSTANT	0.25	120	1	60	EXP	CLASS 1, DIV 1	41	IPF CDD 125	1, 2, 3, 5, 6
EF-2221	GENERATOR PAD	WET WELL	CENTRIFUGAL	100	6.0	3,600	CONSTANT	0.75	120	1	60	EXP	CLASS 1, DIV 1	52 W/ ATTENUATION	IPF CMVECO 160	1, 2, 3, 5, 6, 7

SCHEDULE NOTES:

1. STATIC PRESSURE EXTERNAL TO FAN.
2. FAN "SPEED" AND "POWER" AS SCHEDULED ARE MAXIMUM VALUES
3. NOISE RATING IS FOR FAN WITH DUCTED INLET/OUTLET, MEASURED AT 5 FEET. FOR FAN'S MEASURED AT 3 METERS, THE ALLOWABLE SOUND LEVEL SHALL BE 5 dB(A) LOWER THAN THAT REQUIRED AT 5 FEET. SEE SPECIFICATIONS FOR NOISE PERFORMANCE OF ENCLOSURE.
4. DRY WELL SUPPLY AND EXHAUST FAN SHALL BE SPEED ADJUSTED TO ACHIEVE THE DESIGN FLOW RATE AND 0.1 INCH POSITIVE PRESSURE INSIDE THE DRY WELL.
5. WET WELL SUPPLY AND EXHAUST FANS SHALL BE DAMPENED TO ACHIEVE THE DESIGN FLOW AT THE EXHAUST AND A 0.1 INCH NEGATIVE PRESSURE INSIDE WET WELL.
6. WET WELL FAN AND MOTOR SHALL BE DESIGNED TO OPERATE WITHIN CLASS 1, DIVISION 1, GROUPS C & D ENVIRONMENTS IN ACCORDANCE WITH NFPA 820. FAN IS INSTALLED OUTDOORS IN AN OUTDOOR ENCLOSURE OR VAULT. SEE SPECIFICATIONS. PROVIDE MOTOR-RATED FOR 50 C AMBIENT TEMPERATURE.
7. WET WELL EXHAUST FAN (EF-2221) IS MOUNTED ON TOP OF THE ODOR CONTROL MEDIA DRUM.

LOUVER & GRILLE SCHEDULE

MARK	TYPE	MAXIMUM CAPACITY (CFM)	DESIGN FLOW (CFM)	NOMINAL SIZE (IN)	MAXIMUM NC, NOTE 1	MAXIMUM TSP DROP (IN), NOTE 2	MATERIAL	FINISH	BASIS OF DESIGN
SG-2210	EXTERIOR WALL	1,200	410	12 x 12	15	0.05	TYPE 316 SST	NONE	TITUS 300 RLSS NO DAMPER
SG-2211 & 2212	DUCT	260	100	6 x 6	15	0.08	TYPE 316 SST	NONE	TITUS 300 RLSS W/ INTEGRAL DAMPER
SG-2213	DUCT	470	210	16 x 4	<20	0.12	TYPE 316 SST	NONE	TITUS S300 FLSS
EG-2214 & 2215	DUCT	470	205	16 x 4	<20	0.07	TYPE 316 SST	NONE	TITUS S301 FLSS 0° BLADES
SL-2220 & EL-2221	EXTERIOR WALL	300	100	12 x 18	SEE NOTE 4	0.05	ALUMINUM	KYNAR	RUSKIN ACL 445

SCHEDULE NOTES:

1. MAXIMUM NOISE CRITERION CURVE (NC) AT DESIGN FLOW. EACH NC REPRESENTS THE NOISE CRITERION CURVE THAT WILL NOT BE EXCEEDED BY SOUND PRESSURE IN ANY OCTAVE BANDS 2 THROUGH 7.
2. TOTAL STATIC PRESSURE DROP ACROSS GRILLE AT DESIGN FLOW.
3. PROVIDE 2" x 2" x 16" LONG DRIP GUARD 1" TO 3" ABOVE SL-1 TO PREVENT WATER INTRUSION. USE 12 GAUGE TYPE 316 SST SHEET METAL. TRIM AND DEBUR ALL EDGES.
4. LOUVER SHALL REDUCE NOISE A MINIMUM OF 9 dB ON EACH OCTAVE BAND.

HVAC SCHEDULES
H-2

VAULT SERIAL NO.	DATE	MARK	NATURE REVISIONS	MADE	CHK'D	REV'D

S:\Cad\Seattle Public Utilities\17-10503 Mcg PS22 Retrofit Design\dwgs\H2-261-1009_P-HVAC-TABLES.dwg
acorisso Dec-20-18 1:08pm

CDM Smith
14432 SE Eastgate Way
Suite 100
Bellevue, WA 98007
Tel: (425) 519-8300

BHC CONSULTANTS
1601 Fifth Avenue, Suite 500
Seattle, Washington 98101
Tel: 206.505.3400
www.bhcconsultants.com

REVIEWED BY SPU/WATER ENGINEERING ..... 20.....
REVIEWED BY SPU/DRAINAGE ..... 20.....
APPROVED BY SDOT STREET IMPROVEMENT PERMITTING ..... 20.....

APPROVED FOR ADVERTISING
LIZ ALZEER
DEPARTMENT OF FINANCE & ADMINISTRATIVE SERVICES
SEATTLE, WASHINGTON . . . . . 20 . .
BY: . . . . . .
CITY PURCHASING & CONTRACTING SERVICES DIRECTOR

INITIALS AND DATE			INITIALS AND DATE	
DESIGNED	JF	12/20/2018	REVIEWED: DES.	CONST.
CHECKED	JRG	12/20/2018	SDOT	PROJ. MGR.
DRAWN	GOC	12/20/2018	RECEIVED	
CHECKED	PLS	12/20/2018	REVISED AS BUILT	

ALL WORK SHALL BE DONE IN ACCORDANCE WITH THE CITY OF SEATTLE STANDARD PLANS AND SPECIFICATIONS AND OTHER DOCUMENTS CALLED FOR IN SECTION 0-02.3 OF THE PROJECT MANUAL.

JOHN FRECH — STATE OF WASHINGTON — 36485 — REGISTERED PROFESSIONAL ENGINEER — 2018

Seattle Public Utilities
ORDINANCE NO. 125475 PW NO. 2018-064
FUND: DWS
SCALE: NONE

PUMP STATION NO. 22 RETROFIT AND FORCE MAIN REPLACEMENT

JOB NO. PC C315071 R/W CO
VAULT PLAN NO. 776-474
SHEET 45 OF 71

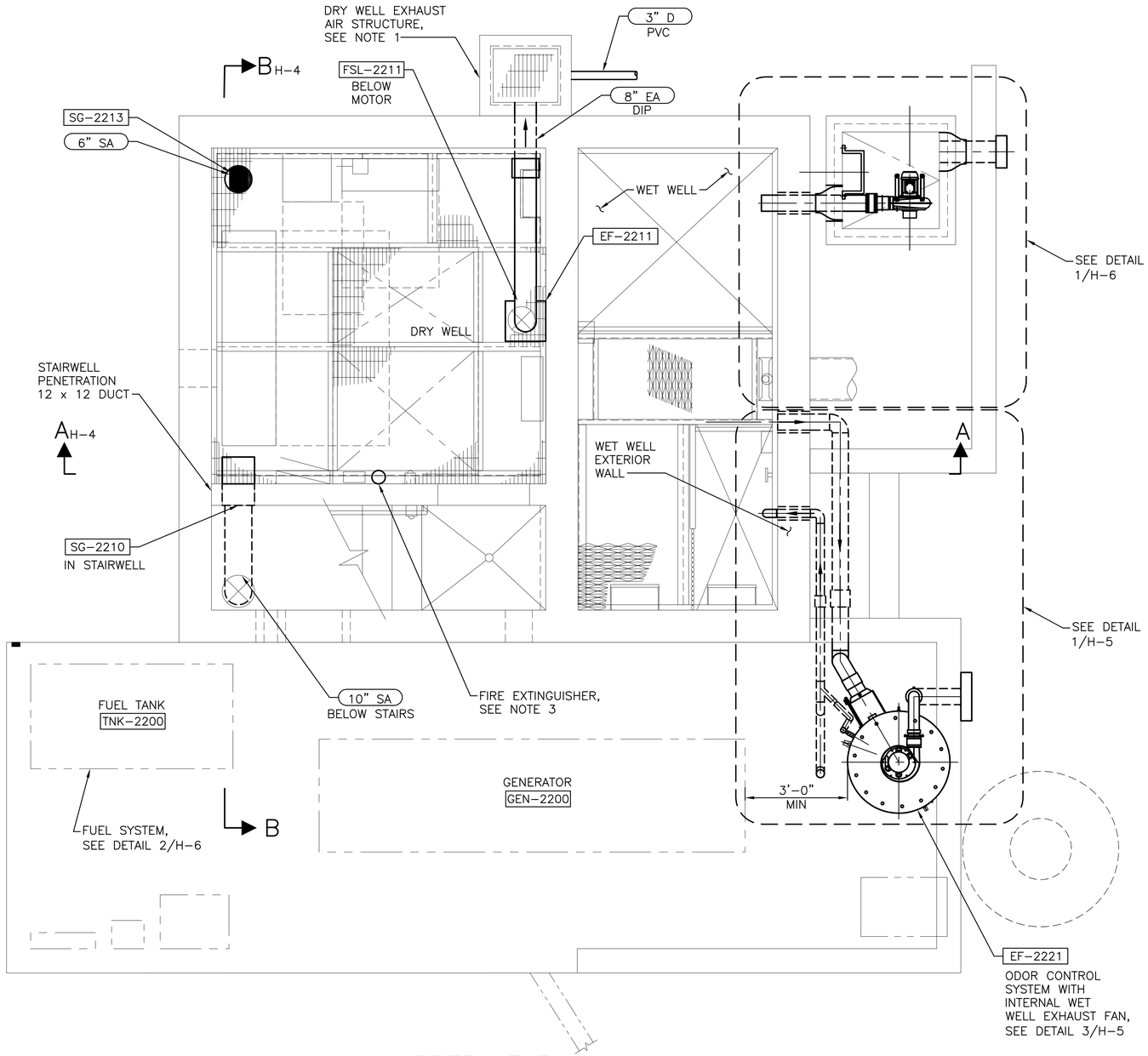

UPPER LEVEL PLAN

1/2" = 1'-0"

N

2 1 0 2 4

SCALE IN FEET

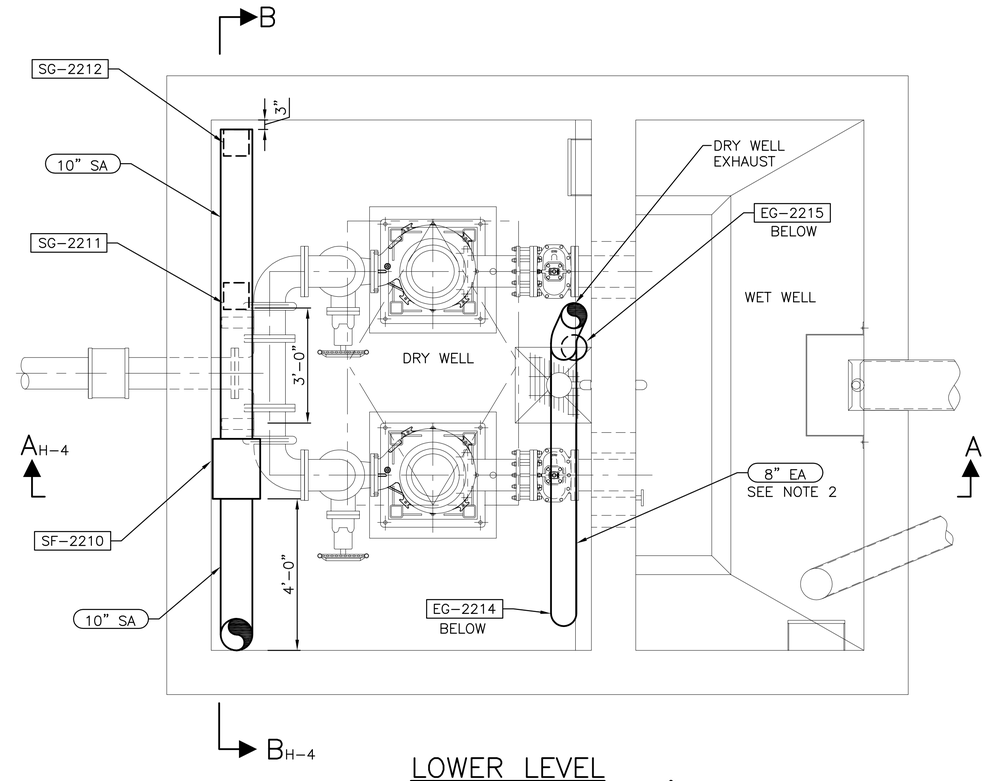

LOWER LEVEL PLAN

1/2" = 1'-0"

N

2 1 0 2 4

SCALE IN FEET

NOTES:

1. STRUCTURE TO BE JUNCTION BOX, FRAME AND GRATE PER CITY STD PLANS 277 AND 264. SET 3" DRAIN IE 0.2 FEET ABOVE BOTTOM OF STRUCTURE AND GROUT FLOOR TO SLOPE TO DRAIN. CORE DRILL HOLE TO ACCOMMODATE EA PIPE.
2. LOCATE LOWER EXHAUST DUCT 2 INCHES OFF OF EAST WALL OR AS REQUIRED TO PASS SUMP PUMP DISCHARGE PIPE, SEE MECHANICAL DRAWINGS.
3. FURNISH AND INSTALL ONE (1) MULTI-PURPOSE DRY CHEMICAL TYPE FIRE EXTINGUISHER. SHALL BE HEAVY DUTY DOT STEEL TANK, UL RATING 4A-80B-C, 10 LB. CAPACITY WITH PRESSURE GAGE, RED ENAMEL FINISH, METAL VALVES AND SIPHON TUBES. FIRE EXTINGUISHER SHALL BE WALL-MOUNTED 36-INCHES ABOVE THE GRATING. CONFIRM FIRE EXTINGUISHER LOCATION WITH OWNER AND FIRE OFFICIAL.

HVAC PLANS
H-3

VAULT SERIAL NO.	DATE	MARK	NATURE REVISIONS	MADE	CHK'D	REV'D

S:\Cad\Seattle Public Utilities\17-10503 Mag PS22 Retrofit Design\dwgs\H3-261-1009_P-HVAC-Plans.dwg
acarlaso Dec-20-18 1:08pm

CDM Smith
14432 SE Eastgate Way
Suite 100
Bellevue, WA 98007
Tel: (425) 519-8300

BHC CONSULTANTS
1601 Fifth Avenue, Suite 500
Seattle, Washington 98101
Tel: 206.505.3400
www.bhcconsultants.com

REVIEWED BY SPU/WATER ENGINEERING ..... 20.....

REVIEWED BY SPU/DRAINAGE ..... 20.....

APPROVED BY SDOT STREET IMPROVEMENT PERMITTING ..... 20.....

APPROVED FOR ADVERTISING
LIZ ALZEER
DEPARTMENT OF FINANCE & ADMINISTRATIVE SERVICES
SEATTLE, WASHINGTON . . . . . 20 . .

BY: . . . . . .
CITY PURCHASING & CONTRACTING SERVICES DIRECTOR

INITIALS AND DATE			INITIALS AND DATE	
DESIGNED	JF	12/20/2018	REVIEWED:	
CHECKED	JRG	12/20/2018	DES.	CONST.
			SDOT	PROJ. MGR.
DRAWN	ASC	12/20/2018	RECEIVED	
CHECKED	PLS	12/20/2018	REVISED AS BUILT	

ALL WORK SHALL BE DONE IN ACCORDANCE WITH THE CITY OF SEATTLE STANDARD PLANS AND SPECIFICATIONS AND OTHER DOCUMENTS CALLED FOR IN SECTION 0-02.3 OF THE PROJECT MANUAL.

JOHN FRECH STATE OF WASHINGTON 36483 REGISTERED PROFESSIONAL ENGINEER 2018

Seattle Public Utilities

ORDINANCE NO. 125475 PW NO. 2018-064
FUND: DWS
SCALE: 1/2" = 1'-0"

PUMP STATION NO. 22 RETROFIT AND FORCE MAIN REPLACEMENT

JOB NO. PC C315071 R/W CO

VAULT PLAN NO. 776-474

SHEET 46 OF 71

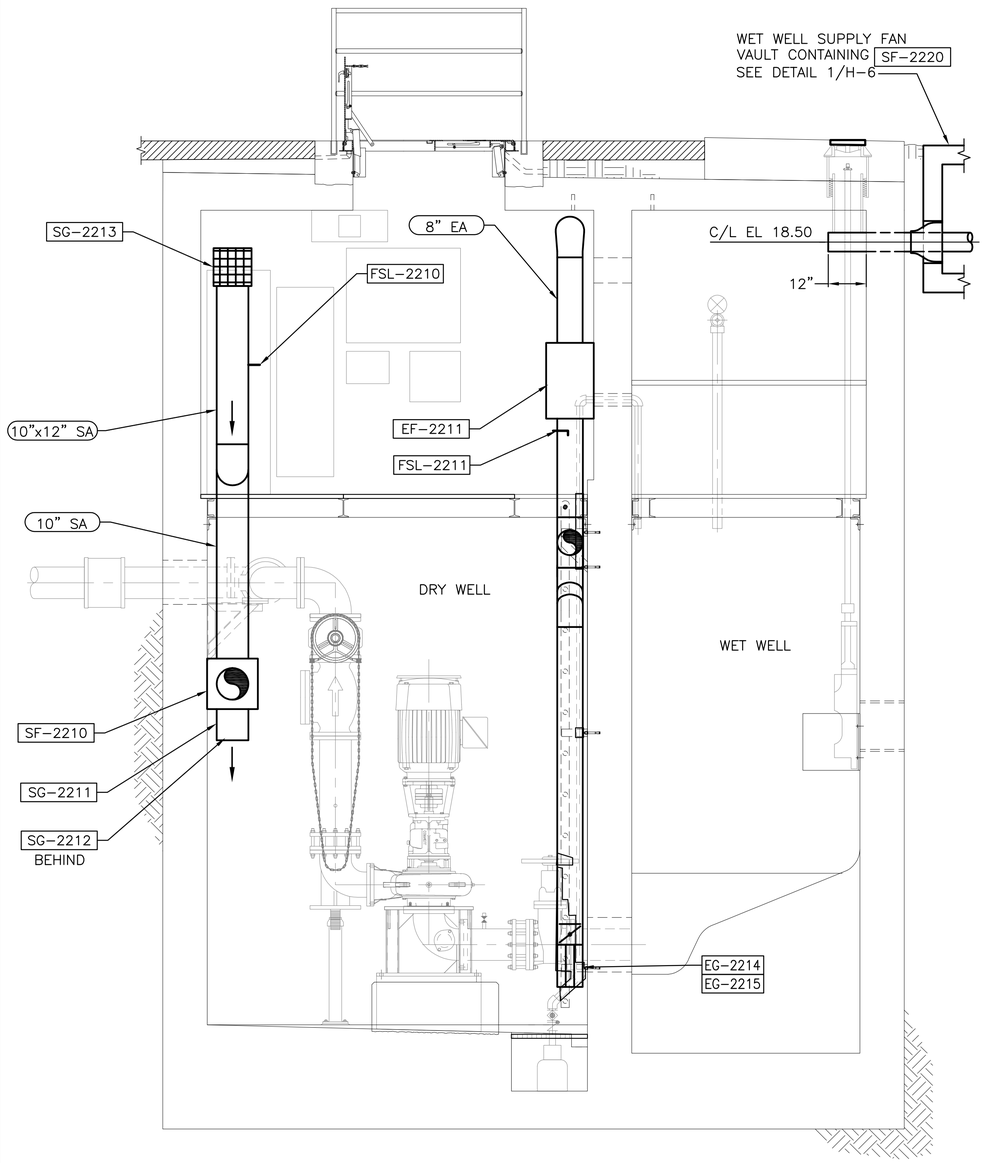

SECTION A–A H-3

1/2" = 1'-0"

2 1 0 2 4

SCALE IN FEET

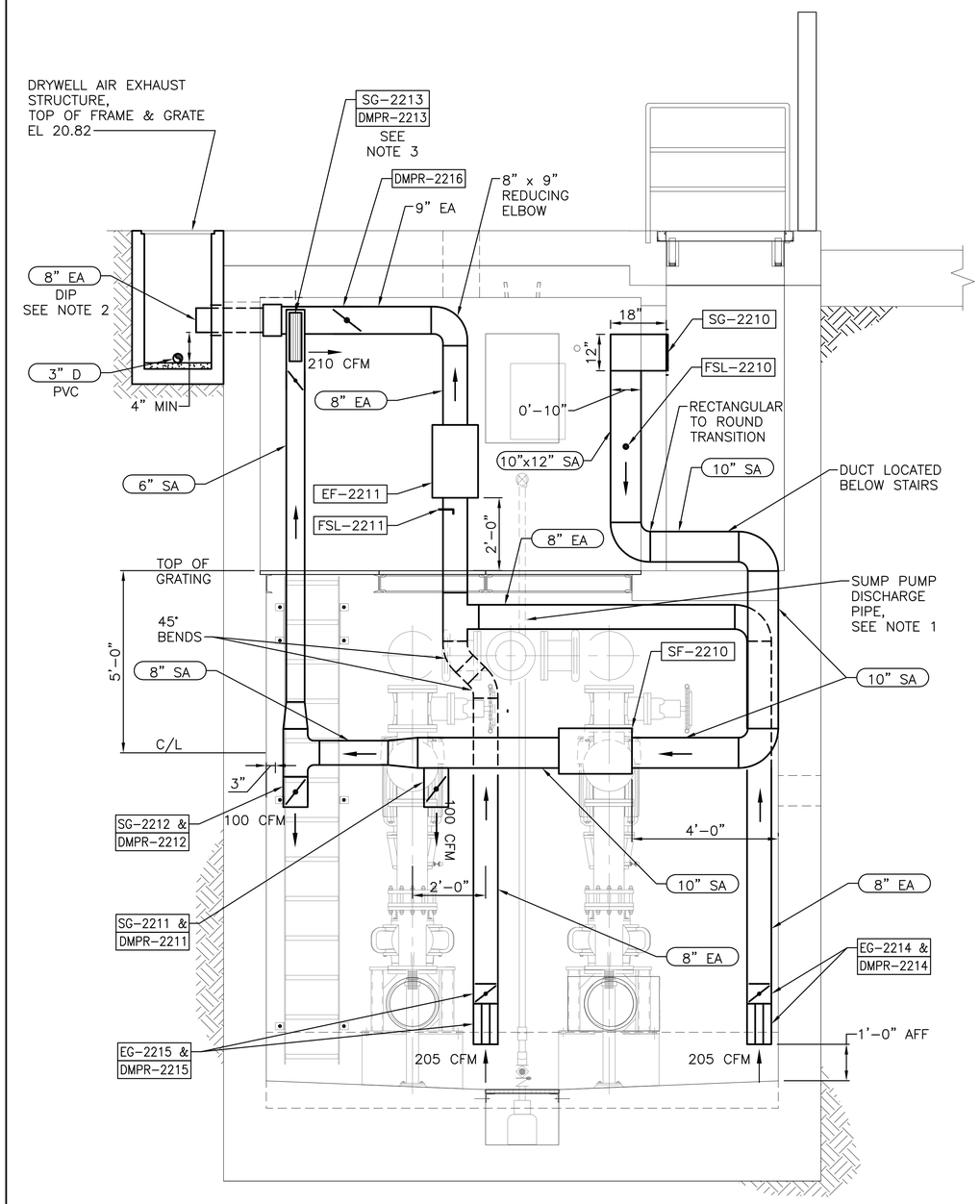

SECTION B–B H-3

1/2" = 1'-0"

2 1 0 2 4

SCALE IN FEET

NOTES:

1. LOCATE LOWER EXHAUST DUCT 2–INCHES OFF OF EAST WALL OR AS REQUIRED TO PASS SUMP PUMP DISCHARGE PIPE, SEE MECHANICAL DRAWINGS.
2. EXTEND 8" EA (8" DUCTILE IRON PIPE OD = 9.05") INTO DRY WELL 6" AND CONNECT TO 9" EA (SHEET METAL) WITH FERNCO FLEXIBLE COUPLING, OR EQUAL.
3. ORIENT EXHAUST GRILLE TO DIRECT AIR TOWARDS CENTER OF ROOM.
4. PROVIDE SIGN NEAR DOOR WITH 1–INCH LETTERS STATING "KEEP DOORS CLOSED FOR PROPER VENTILATION."

HVAC SECTIONS
H–4

VAULT SERIAL NO.	DATE	MARK	NATURE REVISIONS	MADE	CHK'D	REV'D

S:\Cad\Seattle Public Utilities\17-10503 Mag PS22 Retrofit Design\dwgs\H4-261-1009_P-HVAC-Sections.dwg
accardso Dec-20-18 1:56pm

CDM Smith
14432 SE Eastgate Way
Suite 100
Bellevue, WA 98007
Tel: (425) 519-8300

BHC CONSULTANTS
1601 Fifth Avenue, Suite 500
Seattle, Washington 98101
Tel: 206.505.3400
www.bhcconsultants.com

REVIEWED BY SPU/WATER ENGINEERING ..... 20.....

REVIEWED BY SPU/DRAINAGE ..... 20.....

APPROVED BY SDOT STREET IMPROVEMENT PERMITTING ..... 20.....

APPROVED FOR ADVERTISING
LIZ ALZEER
DEPARTMENT OF FINANCE & ADMINISTRATIVE SERVICES
SEATTLE, WASHINGTON . . . . . 20 . .

BY: . . . . . .
CITY PURCHASING & CONTRACTING SERVICES DIRECTOR

INITIALS AND DATE		
DESIGNED	JF	12/20/2018
CHECKED	JRG	12/20/2018
DRAWN	SO	12/20/2018
CHECKED	PLS	12/20/2018

INITIALS AND DATE	
REVIEWED:	
DES.	CONST.
SDOT	PROJ. MGR.
RECEIVED	
REVISED AS BUILT	

ALL WORK SHALL BE DONE IN ACCORDANCE WITH THE CITY OF SEATTLE STANDARD PLANS AND SPECIFICATIONS AND OTHER DOCUMENTS CALLED FOR IN SECTION 0-02.3 OF THE PROJECT MANUAL.

JOHN FRECH
STATE OF WASHINGTON
36385
REGISTERED PROFESSIONAL ENGINEER
12-20-18

Seattle Public Utilities

ORDINANCE NO. 125475 PW NO. 2018-064
FUND: DWS
SCALE: 1/2" = 1'-0"

PUMP STATION NO. 22 RETROFIT AND FORCE MAIN REPLACEMENT

JOB NO. PC C315071 R/W CO

VAULT PLAN NO. 776-474

SHEET 47 OF 71

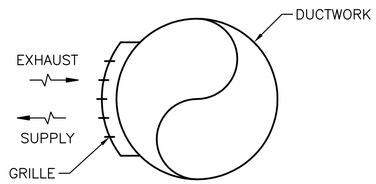

TYPICAL SG–2213, EG–2214 & EG–2215

DETAIL – AIR GRILLE (1/H3)

SCALE: NONE

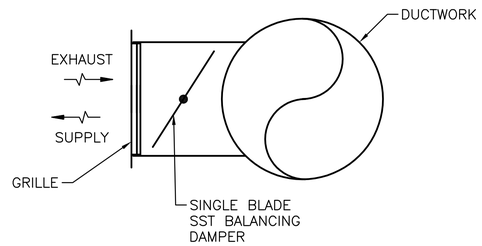

TYPICAL SG–2211 & SG–2212

DETAIL – AIR GRILLE WITH INTEGRAL DAMPER (2/H3)

SCALE: NONE

NOTES:

1. DRAIN (D) AND EXHAUST AIR (EA) PIPING SHALL BE SCHEDULE 80 PVC.
2. DRAIN AND EXHAUST AIR FITTINGS SHALL BE:
   - ABOVE GRADE – SCHEDULE 80 PVC
   - BELOW GRADE – GASKETED CLASS 200 PVC PER ASTM F477, UNLESS NOTED OTHERWISE
3. SEE STRUCTURAL DWG'S FOR PENETRATION REQUIREMENTS.
4. CONTRACTOR TO SUBMIT DRAIN AND VENT PIPE SHOP DRAWINGS FOR ENGINEER'S REVIEW.

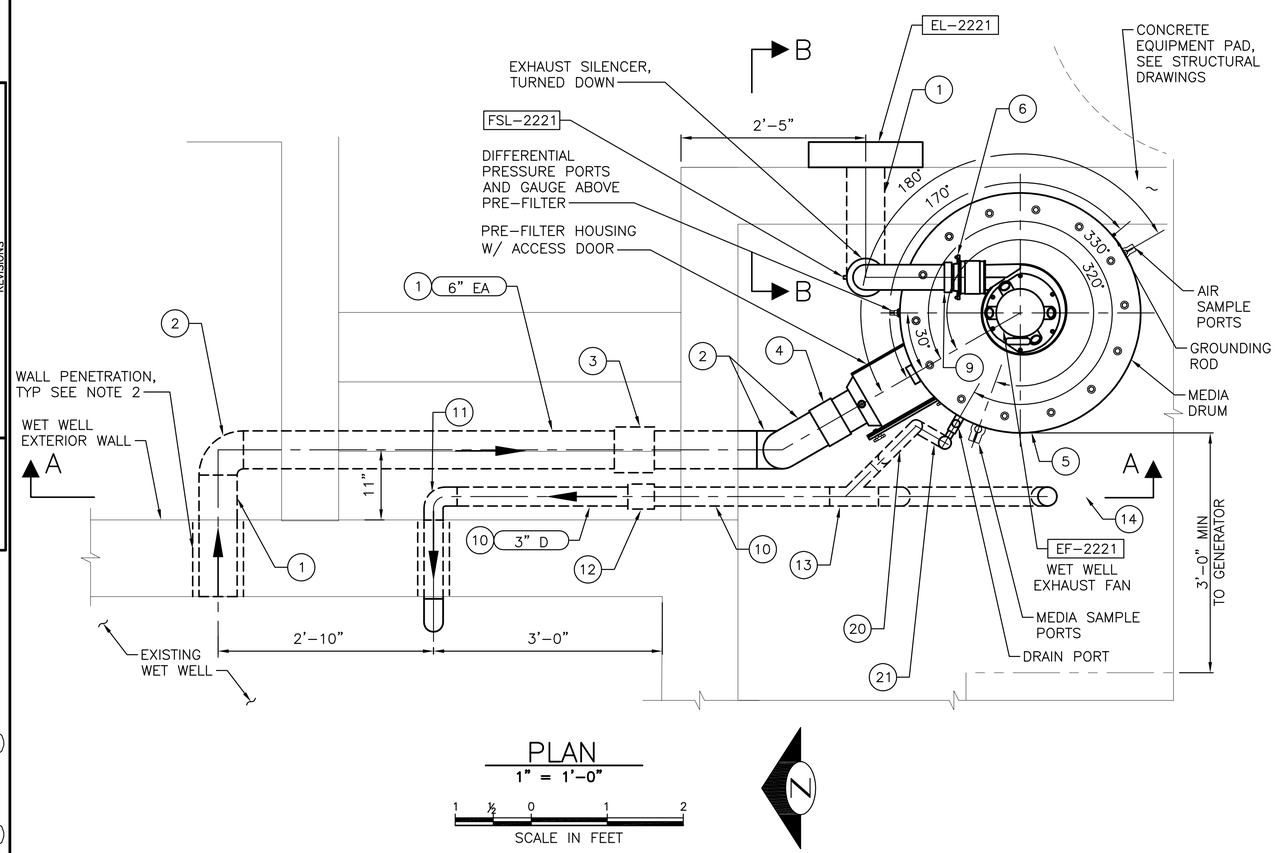

PLAN

1" = 1'–0"

SCALE IN FEET

DETAIL – WET WELL ODOR CONTROL AND EXHAUST FAN (3/–)

1" = 1'–0"

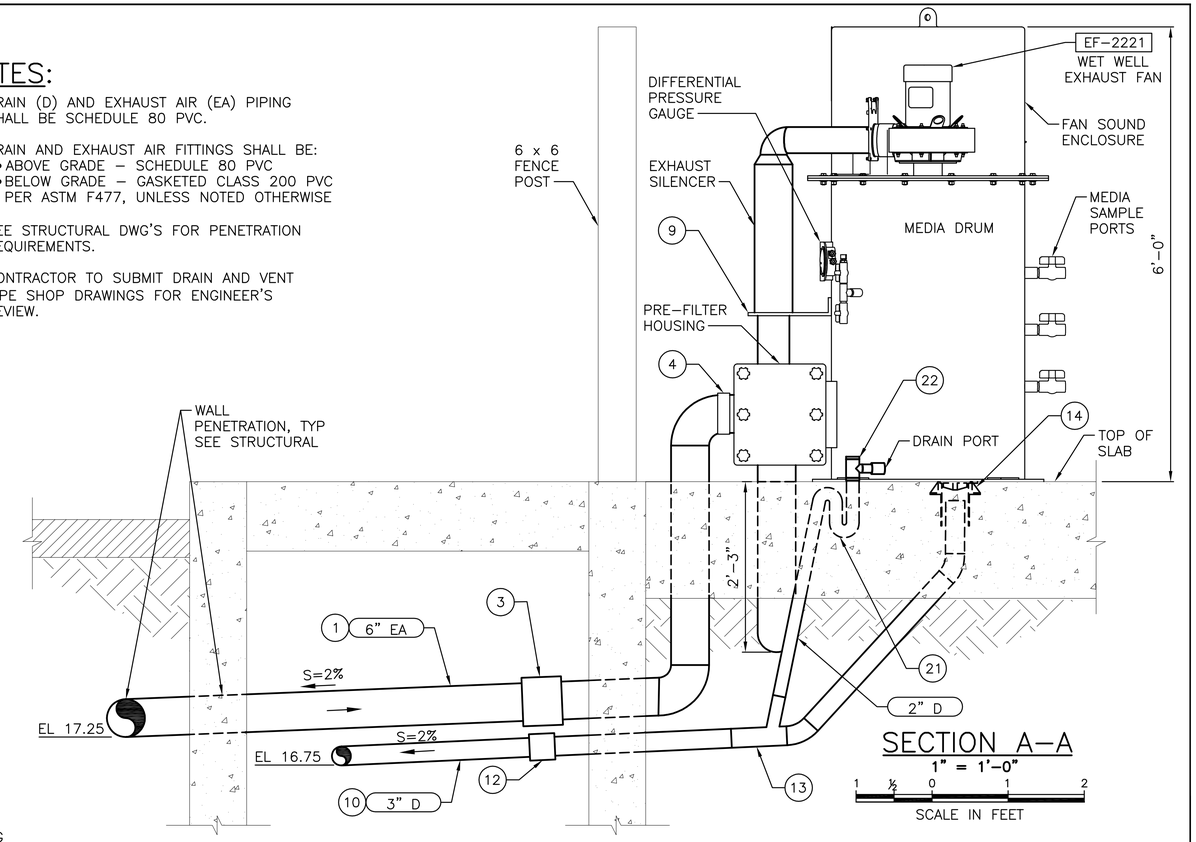

SECTION A–A

1" = 1'–0"

SCALE IN FEET

EQUIPMENT AND MATERIAL LIST

ITEM NUMBER	DESCRIPTION
1	6" PVC PIPE
2	6" PVC 90 BEND, SEE NOTE 2
3	6" CLASS 200 PVC COUPLING, GASKET PER ASTM F477
4	6" FLEXIBLE COUPLING
5	ODOR CONTROL SYSTEM
6	EXHAUST DAMPER WITH FLEXIBLE COUPLING EACH SIDE, SIZED BY MANUFACTURER
7	PVC REDUCER 6" DIAMETER x SILENCER DIAMETER
8	FLEXIBLE COUPLING SIZED TO CONNECT SILENCER TO REDUCER
9	SILENCER BRACKET
10	3" PVC PIPE
11	3" CLASS 200 PVC 90 BEND, GASKET PER ASTM F477
12	3" CLASS 200 PVC COUPLING, GASKET PER ASTM F477
13	3" x 2" WYE OR TEE (AS REQUIRED), SEE NOTE 4
14	3" CLEAN OUT W/RUBBER MECH PLUG PER COS STD PLAN 280
20	2" PVC PIPE (GLUED)
21	2" PVC P–TRAP (GLUED) W/4" MIN TRAPPED WATER
22	2" x 1" PVC TEE (GLUED) W/2" PVC CAP (NOT GLUED)

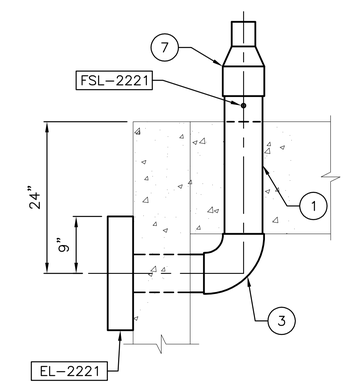

SECTION B–B

1" = 1'–0"

SCALE IN FEET

HVAC DETAILS H–5

MARK	DATE	NATURE REVISIONS	MADE	CHK'D	REV'D

VAULT SERIAL NO.

CDM Smith
14432 SE Eastgate Way
Suite 100
Bellevue, WA 98007
Tel: (425) 519-8300

BHC CONSULTANTS
1601 Fifth Avenue, Suite 500
Seattle, Washington 98101
Tel: 206.505.3400
www.bhcconsultants.com

REVIEWED BY SPU/WATER ENGINEERING ..... 20.....

REVIEWED BY SPU/DRAINAGE ..... 20.....

APPROVED BY SDOT STREET IMPROVEMENT PERMITTING ..... 20.....

APPROVED FOR ADVERTISING
LIZ ALZEER
DEPARTMENT OF FINANCE & ADMINISTRATIVE SERVICES
SEATLE, WASHINGTON . . . . . 20 . .

BY: . . . . . .
CITY PURCHASING & CONTRACTING SERVICES DIRECTOR

INITIALS AND DATE		
DESIGNED	JF	12/20/2018
CHECKED	JRG	12/20/2018
DRAWN	GOC	12/20/2018
CHECKED	PLS	12/20/2018

INITIALS AND DATE	
REVIEWED:	
DES.	CONST.
SDOT	PROJ. MGR.
RECEIVED	
REVISED AS BUILT	

ALL WORK SHALL BE DONE IN ACCORDANCE WITH THE CITY OF SEATTLE STANDARD PLANS AND SPECIFICATIONS AND OTHER DOCUMENTS CALLED FOR IN SECTION 0–02.3 OF THE PROJECT MANUAL.

JOHN FRECH — STATE OF WASHINGTON — 36485 — REGISTERED PROFESSIONAL ENGINEER — 2018

Seattle Public Utilities

ORDINANCE NO. 125475 PW NO. 2018–064
FUND: DWS
SCALE: As Shown

PUMP STATION NO. 22 RETROFIT AND FORCE MAIN REPLACEMENT

JOB NO. PC C315071 R/W CO

VAULT PLAN NO. 776–474

SHEET 48 OF 71

S:\Cad\Seattle Public Utilities\17–10503 Mag PS22 Retrofit Design\dwgs\H5–261–1009_P–HVAC–Details.dwg
acorless Dec–20–18 2:00pm

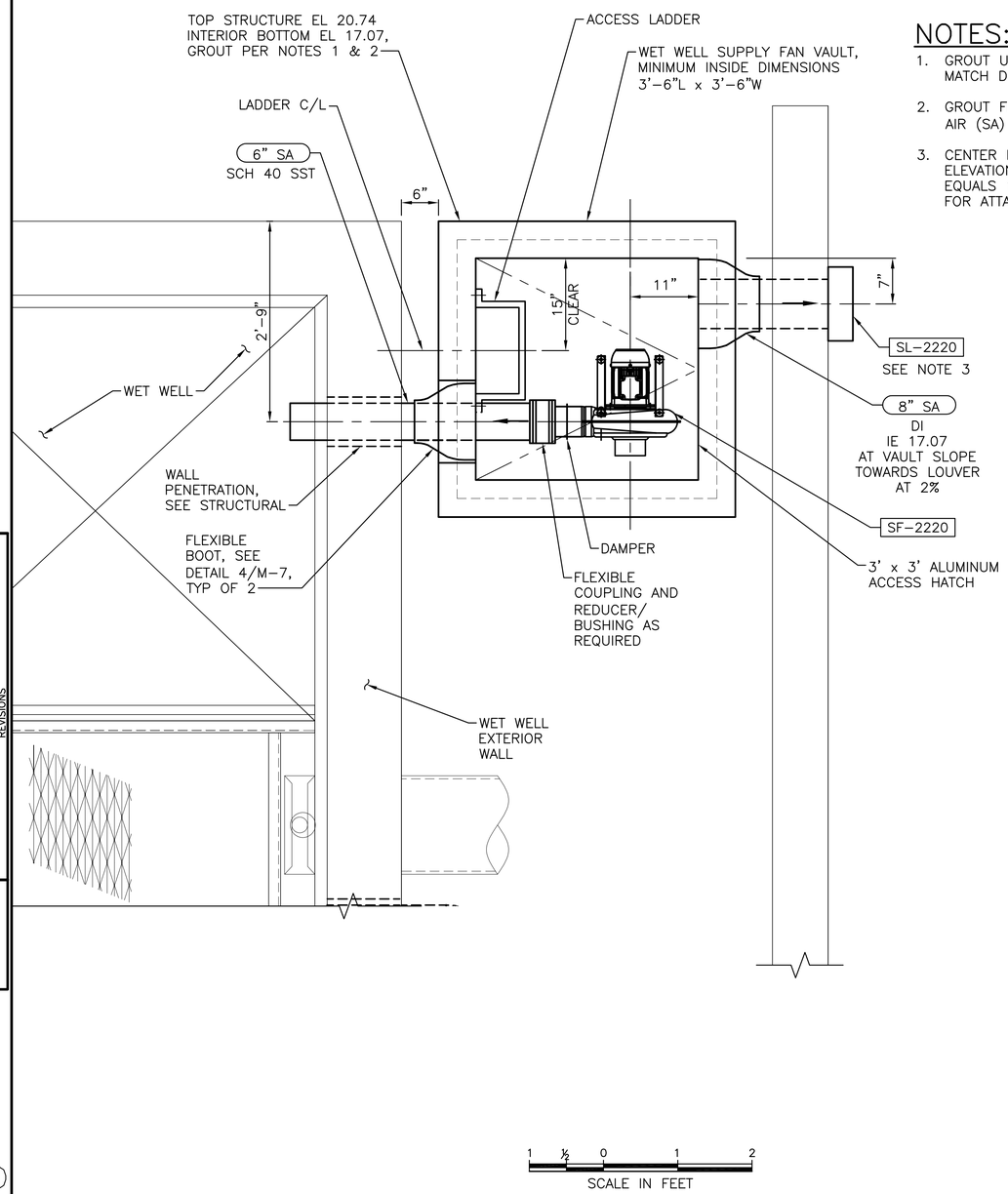

NOTES:

1. GROUT UNDER FAN AS REQUIRED TO MATCH DISCHARGE PIPE CENTER LINE.
2. GROUT FLOOR TO SLOPE TO SUPPLY AIR (SA) PIPE.
3. CENTER LOUVER OVER SUPPLY PIPE. ELEVATION BOTTOM OF LOUVER EQUALS 16.90. SEE STRUCTURAL FOR ATTACHMENT.

UPPER LEVEL DETAIL (1/H3)

1" = 1'-0"

N

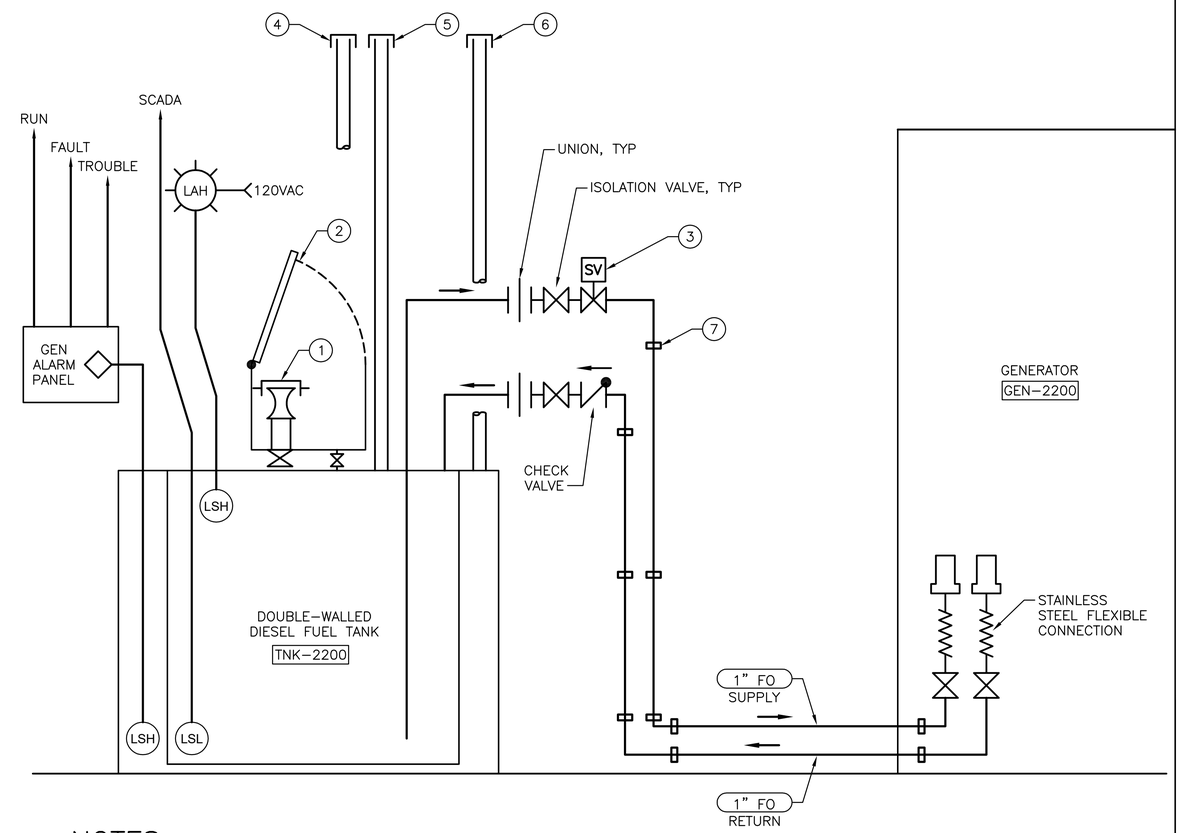

NOTES:

1. FUEL FILL CONNECTION 2" CAMLOCK FITTING W/ DUST CAP
2. 5 GALLON SPILL CONTAMINATED W/ HINGED COVER AND MANUAL DRAIN VALVE
3. ANTI SIPHON VALVE – TIED TO ENGINE GENERATOR STARTING SYSTEM
4. 2" ATMOSPHERIC VENT, 12 FEET ABOVE GRADE
5. 4" PRIMARY EMERGENCY VENT
6. 4" SECONDARY EMERGENCY VENT
7. PIPE SUPPORT, 4'-0" O.C. MAX SPACING, ZSI CUSHION CLAMP STAINLESS STEEL OMEGA SERIES, OR EQUAL

FUEL SYSTEM SCHEMATIC DIAGRAM (2/H3), E-13

NTS

HVAC DETAILS
H-6

VAULT SERIAL NO.	DATE	MARK	NATURE REVISIONS	MADE	CHK'D	REV'D

S:\Cad\Seattle Public Utilities\17-10503 Mag PS22 Retrofit Design\dwga\H6-261-1009_P-HVAC-Details.dwg
acariaso Dec-20-18 1:09pm

CDM Smith
14432 SE Eastgate Way
Suite 100
Bellevue, WA 98007
Tel: (425) 519-8300

BHC CONSULTANTS
1601 Fifth Avenue, Suite 500
Seattle, Washington 98101
Tel: 206.505.3400
www.bhcconsultants.com

REVIEWED BY SPU/WATER ENGINEERING ..... 20.....
REVIEWED BY SPU/DRAINAGE ..... 20.....
APPROVED BY SDOT STREET IMPROVEMENT PERMITTING ..... 20.....

APPROVED FOR ADVERTISING
LIZ ALZEER
DEPARTMENT OF FINANCE & ADMINISTRATIVE SERVICES
SEATTLE, WASHINGTON . . . . . 20 . .
BY: . . . . . .
CITY PURCHASING & CONTRACTING SERVICES DIRECTOR

INITIALS AND DATE		
DESIGNED	JF	12/20/2018
CHECKED	JRG	12/20/2018
DRAWN	SO	12/20/2018
CHECKED	PLS	12/20/2018

INITIALS AND DATE	
REVIEWED:	
DES.	CONST.
SDOT	PROJ. MGR.
RECEIVED	
REVISED AS BUILT	

ALL WORK SHALL BE DONE IN ACCORDANCE WITH THE CITY OF SEATTLE STANDARD PLANS AND SPECIFICATIONS AND OTHER DOCUMENTS CALLED FOR IN SECTION 0-02.3 OF THE PROJECT MANUAL.

JOHN FRECHE
STATE OF WASHINGTON
36485
REGISTERED PROFESSIONAL ENGINEER
12-20-18

Seattle Public Utilities
ORDINANCE NO. 125475 PW NO. 2018-064
FUND: DWS
SCALE: 1/2" = 1'-0"

PUMP STATION NO. 22 RETROFIT AND FORCE MAIN REPLACEMENT

JOB NO. PC C315071 R/W CO
VAULT PLAN NO. 776-474
SHEET 49 OF 71

ELECTRICAL LEGEND

SYMB	DESCRIPTION
PXXX	CONDUIT AND CONDUCTOR CALLOUT PER CONDUIT AND CABLE SCHEDULE
	CONNECTION POINT TO EQUIPMENT SPECIFIED. FURNISHED AND INSTALLED UNDER OTHER DIVISIONS. RACEWAY CONDUCTOR AND CONNECTION IN THIS SECTION.
SPD	SURGE PROTECTIVE DEVICE
MCC–A	MAJOR ELECTRICAL COMPONENT OR DEVICE – NAME OR IDENTIFYING SYMBOL AS SHOWN.
	BRANCH CIRCUIT PANEL BOARD
UH1	UNIT HEATER
TTC	TELEPHONE TERMINAL CABINET
TJB	TERMINAL JUNCTION BOX
5 M	MOTOR, SQUIRREL CAGE INDUCTION, HORSEPOWER INDICATED
	WIRE PIGTAIL
X Y	LUMINAIRE, SEE SCHEDULE
Z X Y 4 X Y	WALL MOUNTED LUMINAIRE, SEE SCHEDULE
X Y	EMERGENCY LIGHT FIXTURE
X Y	EXIT LIGHTS, SEE SCHEDULE X – INDICATES FIXTURE TYPE PER LIGHTING FIXTURE SCHEDULE Y – INDICATES CIRCUIT NUMBER FROM PANELBOARD z – INDICATES CONTROLLING SWITCH
	HOME RUN
	CONDUIT DOWN
	CONDUIT UP
	CONDUIT, STUBBED AND CAPPED AS SHOWN
[X###]	RACEWAY – CONDUCTOR TAG X= P– POWER 0–600V S– SIGNAL DC CONTROL C– SIGNAL AC CONTROL U– UTILITY T– TELEPHONE TV– CABLE TV D– DATA HIGHWAY F– FIRE ALARM
S_3^A	WALL SWITCH. SWITCH DESIGNATORS: 2– DOUBLE POLE; A, B, C – ASSOCIATED FIXTURE 3– THREE WAY; P– PILOT LIGHT 4– FOUR WAY; K– KEY OPERATED WP– WEATHERPROOF; D– DIMMER S– SAFETY (20A); CRE– CORROSION RESISTANT MC– MOMENTARY CONTACT
S_M	MANUAL MOTOR STARTER SWITCH
FN LOOP	INTERLOCK LOGIC OR SEQUENTIAL CONTROL

Jeffrey S Gibson

Digitally signed by Jeffrey S Gibson
DN: cn=Jeffrey S Gibson, o=BHC Consultants, LLC, ou, email=jeff.gibson@bhcconsultants.com, c=US
Date: 2018.12.20 13:02:08 -08'00'

NOTE:
THIS IS A STANDARD LEGEND SHEET. SOME SYMBOLS OR ABBREVIATIONS MAY APPEAR ON THIS SHEET AND NOT ON THE PLANS.

SYMB	DESCRIPTION
Y	CONVENIENCE RECEPTACLE – DUPLEX UNLESS SPECIFIED OTHERWISE , 120V, 20A. Y INDICATES CIRCUIT NUMBER FROM PANELBOARD
	CONVENIENCE RECEPTACLE, PEDESTAL, DUPLEX SINGLE FACE UNLESS INDICATED OTHERWISE WP– WEATHERPROOF; C– CLOCK HANGER TL– TWIST LOCK; CRE– CORROSION RESISTANT
30	RECEPTACLE – 208V, 1 PH, AMPERAGE INDICATED (250V, NEMA 6–*R) * = AMPERAGE
30	RECEPTACLE, SPECIAL PURPOSE: AMPS INDICATED
	TELEPHONE RECEPTACLE (OUTLET BOX ONLY) WALL MOUNTED
C	COMPUTER NETWORK CONNECTION BOX
J OR HH	GENERAL CONTROL OR WIRING DEVICE. LETTER SYMBOLS OR ABBREVIATIONS INDICATE TYPE OF DEVICE.
CS	CONTROL STATION: TYPE PUSH BUTTONS & SWITCHES REQUIRED, SEE CONTROL DIAGRAMS.
30	NONFUSED DISCONNECT SWITCH, SIZE INDICATED. 3 POLE UNLESS INDICATED OTHERWISE.
60/40 F	FUSED DISCONNECT SWITCH, SIZE INDICATED (60/40, 60 = SWITCH RATING: 40 = FUSE RATING). 3 POLE UNLESS INDICATED OTHERWISE.
VFD	VARIABLE FREQUENCY DRIVE. SEE CONTROL DIAGRAM.
2	COMBINATION (FUSE OR CIRCUIT BREAKER AS INDICATED) MAGNETIC STARTER, NEMA SIZE INDICATED, SEE CONTROL DIAGRAM.
F	FIRE ALARM STATION, MANUAL
F	FIRE ALARM BELL AND STROBE
FI	AIR DUCT SMOKE DETECTOR IONIZATION
S	SMOKE DETECTOR
K	MECHANICAL INTERLOCK (KIRK–KEY TYPE)
	WARNING BELL
	GROUNDING ROD
M	METER; KWH OR KWHD AS INDICATED
(3)	CURRENT TRANSFORMER, NUMBER INDICATED
G	CONNECTION POINT GROUND
N	NEUTRAL
	2 POSITION SWITCH
A	INDICATING LIGHT, PUSH–TO–TEST, LETTER INDICATES COLOR
A	INDICATING LIGHT – LETTER INDICATES COLOR A AMBER; G GREEN B BLUE; R RED C CLEAR; W WHITE

SYMB	DESCRIPTION
	CONTACT – NORMALLY OPEN
	CONTACT – NORMALLY CLOSED
	OVERLOAD RELAY HEATER
1	MAGNETIC STARTER WITH NEMA SIZE INDICATED
100/M	CIRCUIT BREAKER, MAGNETIC TRIP ONLY, FRAME SIZE SHOWN, 3 POLE UNLESS INDICATED OTHERWISE.
400	CIRCUIT BREAKER, THERMAL MAGNETIC TRIP SHOWN, 3 POLE UNLESS INDICATED OTHERWISE.
E	ELECTRICALLY OPERATED CIRCUIT BREAKER
100	SWITCH – CURRENT RATING INDICATED, 3 POLE UNLESS INDICATED OTHERWISE.
225	FUSE – RATING INDICATED
XXXX AT XXXX AF	DRAWOUT CIRCUIT BREAKER, LOW VOLTAGE
	SURGE ARRESTER
	GROUND
120V OR 120/240V 15 KVA 1 PH	TRANSFORMER, SECONDARY VOLTAGES, PHASE AND RATING INDICATED AS APPLICABLE
GFR 25A 0.1	PICK–UP SETTING TIME; CURRENT CHARACTERISTIC } GROUND FAULT RELAY WITH CT
	PUSH–BUTTON SWITCH, MOMENTARY CONTACT, NORMALLY OPEN
	PUSH–BUTTON SWITCH, MOMENTARY CONTACT, NORMALLY CLOSED
OFF ON AUTO XOO OOX OOX	SELECTOR SWITCH – MAINTAINED CONTACT – (–––) IDENTIFIES OPERATION: X – CLOSED CONTACT O – OPEN CONTACT
	THERMAL SWITCH
X	M = MAGNETIC CONTACTOR C = CONTROL RELAY TD = TIME DELAY RELAY
TD	TIME DELAY CONTACT NORMALLY CLOSED
TDR TC OR TDR TO	TIME DELAY RELAY CONTACT (TIME ACTION INDICATED)
	NORMALLY CLOSED LEVEL SWITCH, OPEN ON RISING LEVEL
	NORMALLY OPEN LEVEL SWITCH, CLOSE ON RISING LEVEL
	HEAT TRACE

ABBREVIATIONS

ABBR	DESCRIPTION
A	AMMETER, AMPERE, AMBER
AC	ALTERNATING CURRENT
AF	AMPERE FRAME
AFF	ABOVE FINISHED FLOOR
AFG	ABOVE FINAL GRADE
AT	AMPERE TRIP
ATS	AUTOMATIC TRANSFER SWITCH
AUX	AUXILIARY
BC	BARE COPPER
C	CONDUIT,CONTACTOR,CONDULET
CB	CIRCUIT BREAKER
CC	CONTROL CABLE
CKT	CIRCUIT
CL	CLOSE
CO	CONDUIT ONLY
COS	CITY OF SEATTLE
CP	CONTROL PANEL
CPT	CONTROL POWER TRANSFORMER
CR	CONTROL RELAY
CS	CONTROL STATION
CT	CURRENT TRANSFORMER
DC	DIRECT CURRENT
DIV	DIVISION
DS	DISCONNECT SWITCH
E	EMPTY, ELECTRIC CONDUIT
ECB	ELECTRICAL CABLE
ECD	ELECTRICAL CONDUIT
ECP	ENVIRONMENTAL CONTROL PANEL
EF	EXHAUST FAN
EL	ELEVATION
ETM	ELAPSED TIME METER
EXST,EX	EXISTING
EP	EXPLOSION PROOF
F, FU	FUSE
FAP	FIRE ALARM PANEL
FE	FLOW ELEMENT
FT	FLOW TRANSMITTER
FLUOR	FLUORESCENT
FVNR	FULL VOLTAGE NON–REVERSING
FVR	FULL VOLTAGE REVERSING
FV	FLOW VALVE
G	GREEN, GROUND
GFI	GROUND FAULT INTERRUPTER
GND	GROUND
HH	HANDHOLE
HID	HIGH INTENSITY DISCHARGE
HPS	HIGH PRESSURE SODIUM
HS	HAND SWITCH
HVAC	HEATING, VENTILATING & AIR CONDITIONING
I&C	INSTRUMENTATION AND CONTROL
INST	INSTANTANEOUS
J,JB	JUNCTION BOX
KWH	KILOWATT HOUR
KWHD	KILOWATT HOUR DEMAND
L	LIGHTING CONTACTOR, LOW SPEED
LB	CONDULET BEND
LCP	LOCAL CONTROL PANEL
LE	LEVEL ELEMENT
LT	LEVEL TRANSMITTER
LOS	LOCKOUT STOP PUSH BUTTON
LS	LEVEL SWITCH
MTS	MANUAL TRANSFER SWITCH
RTC	REAL TIME CONTROL
CTL	CENTURY LINK (QWEST)
SCL	SEATTLE CITY LIGHT
COMM	COMMUNICATION
PP	POWER POLE
CSO	COMBINED SEWER OVERFLOW
VSP	VOLTAGE STABILIZER PANEL

ABBR	DESCRIPTION
M	MAGNETIC CONTACTOR COIL, MAGNETIC TRIP
MCCB	MOLDED CASE CIRCUIT BREAKER
MCC	MOTOR CONTROL CENTER
MD	MOTORIZED DAMPER
MH	MAINTENANCE HOLE
MFR	MANUFACTURER
MS	MOTOR STARTER
MSC	MFR SUPPLIED CABLE
N	NEUTRAL
NC	NORMALLY CLOSED
NO	NORMALLY OPEN
OL	OVERLOAD RELAY
PB	PULL BOX
PC	PHOTOCELL
PDP	POWER DISTRIBUTION PANEL
PDM	POWER DATA MONITOR
PFR	PHASE FAIL RELAY
PH	PHASE
PNL	PANEL
PP	PUMP PANEL
PS	PRESSURE SWITCH
PSC	PUMP STARTS COUNTER
PT	POTENTIAL TRANSFORMER
PVC	POLYVINYL CHLORIDE CONDUIT
PVC–RGS	PVC COATED RIGID GALVANIZED STEEL CONDUIT
R	RED
REC	RECEPTACLE
GRS	GALVANIZED RIGID STEEL CONDUIT
RT	REMOTE TELEMETRY
RTU	REMOTE TRANSMISSION UNIT
RVSS	REDUCED VOLTAGE SOLID STATE STARTER
SC	SPEED CONTROL
SD	SMOKE DETECTOR
SPD	SURGE PROTECTION DEVICE
SS	SOFT START
SST	STAINLESS STEEL
SV	SOLENOID VALVE
SW	SWITCH
SWGR	SWITCHGEAR
T	THERMOSTAT
TC	TIME CLOCK, TIME CLOSE
TCD	TELEMETRY CONDUIT
TD	TEMPERATURE DETECTOR RELAY, TIME DELAY
TDR	TIME DELAY RELAY
TEL	TELEPHONE BACKBOARD
THM	THERMAL SWITCH
TJB	TERMINAL JUNCTION BOX
TO	TIME OPEN
TS	TEMPERATURE SWITCH
TSP	TWISTED SHIELDED PAIR
TST	TWISTED SHIELDED TRIAD
TVSS	TRANSIENT VOLTAGE SURGE SUPPRESSOR
TYP	TYPICAL
UH	UNIT HEATER
UVR	UNDER VOLTAGE RELAY
V	VOLTMETER, VOLT
VFD	VARIABLE FREQUENCY DRIVE
VSC	VENDOR SPECIFIED CABLE
W	WATT
WHD	WATTHOUR DEMAND METER
WP	WEATHERPROOF
XFMR	TRANSFORMER
XP	EXPLOSION–PROOF
RGS	RIGID GALVANIZED STEEL
CU	COPPER
NEU	NEUTRAL
MIN	MINIMUM

ELECTRICAL LEGEND AND ABBREVIATIONS
E–1

VAULT SERIAL NO. | DATE | MARK | NATURE REVISIONS | MADE | CHK'D | REV'D

CDM Smith
14432 SE Eastgate Way
Suite 100
Bellevue, WA 98007
Tel: (425) 519-8300

BHC CONSULTANTS
1601 Fifth Avenue, Suite 500
Seattle, Washington 98101
Tel: 206.505.3400
www.bhcconsultants.com

REVIEWED BY SPU/WATER ENGINEERING .... 20.....
REVIEWED BY SPU/DRAINAGE .... 20.....
APPROVED BY SDOT STREET IMPROVEMENT PERMITTING .... 20.....

APPROVED FOR ADVERTISING
LIZ ALZEER
DEPARTMENT OF FINANCE & ADMINISTRATIVE SERVICES
SEATTLE, WASHINGTON .... 20 ....
BY: ....
CITY PURCHASING & CONTRACTING SERVICES DIRECTOR

INITIALS AND DATE		
DESIGNED	JSG	12/20/2018
CHECKED	JRG	12/20/2018
DRAWN	GOC	12/20/2018
CHECKED	PLS	12/20/2018

INITIALS AND DATE
REVIEWED:
DES. CONST.
SDOT PROJ. MGR.
RECEIVED
REVISED AS BUILT

ALL WORK SHALL BE DONE IN ACCORDANCE WITH THE CITY OF SEATTLE STANDARD PLANS AND SPECIFICATIONS AND OTHER DOCUMENTS CALLED FOR IN SECTION 0–02.3 OF THE PROJECT MANUAL.

JEFFREY S. GIBSON, STATE OF WASHINGTON, 33080, REGISTERED PROFESSIONAL ENGINEER 12-20-18

Seattle Public Utilities
ORDINANCE NO. 125475 PW NO. 2018–064
FUND: DWS
SCALE: NONE

PUMP STATION NO. 22 RETROFIT AND FORCE MAIN REPLACEMENT

JOB NO. PC C315071
R/W
CO
VAULT PLAN NO. 776–474

S:\Cad\Seattle Public Utilities\17–10503 Mag PS22 Retrofit Design\dwgs\E1–261–1009_Legends–Electrical.dwg
palmon Dec–20–18 12:01pm

GENERAL NOTES:

1. SEE DRAWINGS C-1 AND E-3 FOR DEMOLITION PLANS, SECTIONS AND DETAILS.
2. SEE CIVIL, STRUCTURAL AND MECHANICAL DRAWINGS FOR ADDITIONAL PHASING INFORMATION.
3. SALVAGE THE EXISTING SCADA PANEL, GENERATOR, FUEL TANK, AND ATS TO OWNER.
4. COORDINATE DELIVERY OF SALVAGED EQUIPMENT WITH OWNER'S RESIDENT ENGINEER. DELIVER SALVAGED EQUIPMENT TO OWNER'S WAREHOUSE.
5. EXCEPT FOR BRIEF CUTOVERS, SEWAGE PUMPS, EITHER TEMPORARY OR PERMANENT, SHALL HAVE TWO SOURCES OF POWER, UTILITY AND GENERATOR, AT ALL TIMES.

ELECTRICAL CONSTRUCTION PHASING NOTES:

PHASE 1: ELECTRICAL SERVICE UPGRADE

1. PROVIDE NEW METER BASE, CT ENCLOSURE, MAIN CIRCUIT BREAKER, ATS, SERVICE GROUNDING, AND CIRCUITS P100, P200, P201, P203 AND ALL CONDUITS BELOW NEW GENERATOR SLAB. PROVIDE TEMPORARY CONDUIT CIRCUIT FROM ATS INTO DRYWELL. OBTAIN INSPECTOR APPROVAL OF NEW SERVICE. PROVIDE A TEMPORARY PANEL FROM NEW ATS AS REQUIRED FOR TEMPORARY LOADS.
2. SCHEDULE OUTAGE WITH SPU AND SCL. STATION WILL OPERATE ON THE EXISTING GENERATOR DURING SERVICE UPGRADE. SCL WILL REMOVE EXISTING METER, REPLACE TRANSFORMERS ON EXISTING POLE, AND PROVIDE NEW SERVICE TO NEW METER BASE.
3. CONCURRENT WITH SCL WORK, CONTRACTOR SHALL REMOVE EXISTING METER BASE AND PROVIDE TEMPORARY CONNECTION FROM NEW ATS TO EXISTING MCC. REMOVE THE EXISTING NEUTRAL BONDING CONNECTION IN THE EXISTING MCC.
4. OPERATE EXISTING STATION ON NEW ELECTRICAL SERVICE WITH EXISTING GENERATOR BACKUP.

PHASE 2: GENERATOR REPLACEMENT

5. CONTRACTOR SHALL PROVIDE A TRAILER-MOUNTED STANDBY GENERATOR AND FUEL. DISCONNECT THE EXISTING GENERATOR AND PROVIDE A TEMPORARY CONNECTION FROM PORTABLE GENERATOR TO EXISTING ATS AS SHOWN BELOW. PROVIDE AUTOMATIC STARTING CONTROLS FROM THE EXISTING ATS TO THE PORTABLE GENERATOR IF STATION IS UNMANNED.
6. REMOVE THE EXISTING GENERATOR, FUEL TANK AND PIPING. MODIFY THE GENERATOR PAD PER STRUCTURAL DRAWINGS.
7. PROVIDE NEW GENERATOR, FUEL TANK, PIPING. CONNECT THE NEW GENERATOR TO NEW ATS.
8. COMPLETE GENERATOR TESTING AND COMMISSIONING PER SPECS.
9. REMOVE TEMPORARY GENERATOR. SEE GENERAL NOTE 5.

PHASE 3: PUMP STATION UPGRADE

10. PROVIDE TEMPORARY PUMPING/BYPASS PIPING PER PLANS AND SPECS. CONNECT TEMPORARY PUMPING TO NEW ATS (NEW UTILITY SERVICE WITH NEW GENERATOR BACKUP). TEST AND COMMISSION TEMPORARY PUMPING SYSTEM.
11. REPLACE ALL EXISTING ELECTRICAL AND MECHANICAL EQUIPMENT IN DRY WELL AND WET WELL PER PLANS AND SPECS. CONNECT NEW PUMPS TO NEW FORCE MAIN.
12. TEST AND COMMISSION ALL NEW PUMP STATION EQUIPMENT.
13. REMOVE TEMPORARY PUMPING SYSTEM.

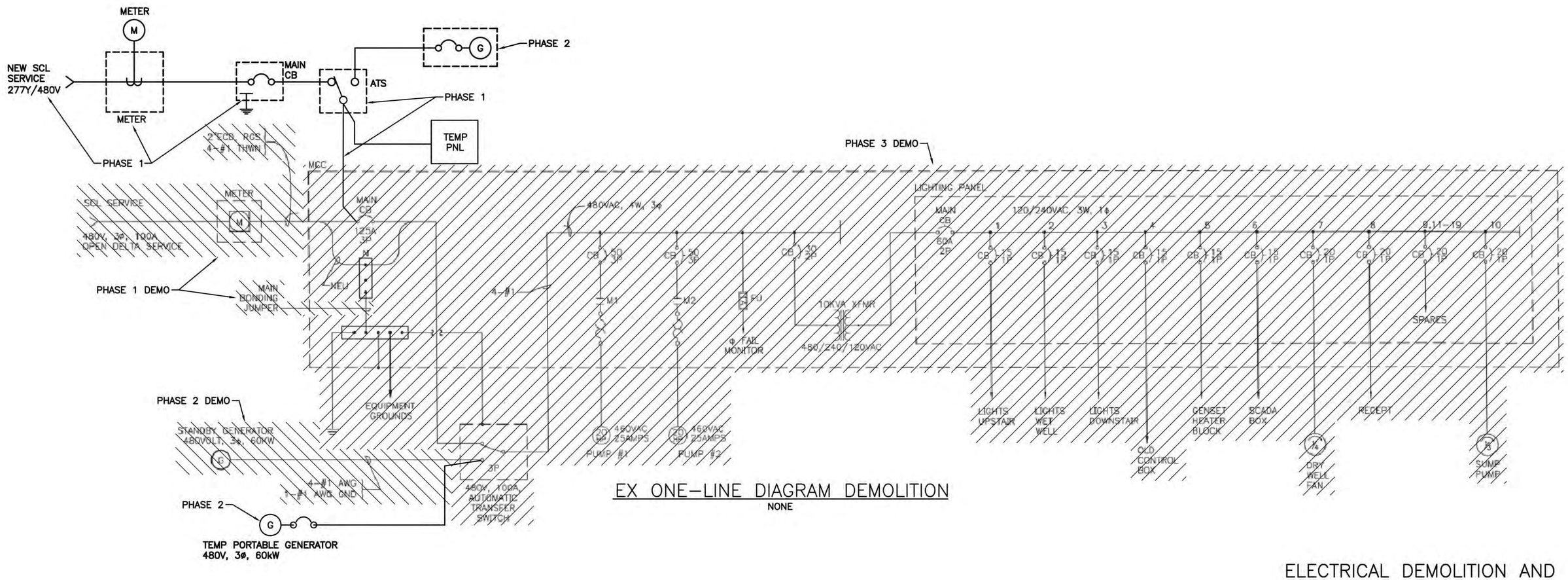

EX ONE-LINE DIAGRAM DEMOLITION
NONE

ELECTRICAL DEMOLITION AND CONSTRUCTION PHASING
E-2

VAULT SERIAL NO.	DATE	MARK	NATURE REVISIONS	MADE	CHK'D	REV'D

S:\Cad\Seattle Public Utilities\17-10503 Mag PS22 Retrofit Design\dwgs\E2-261-1009_P-One-Line Diagrm.dwg
psimon Dec-20-18 12:02pm

000-000-0

CDM Smith
14432 SE Eastgate Way
Suite 100
Bellevue, WA 98007
Tel: (425) 519-8300

BHC CONSULTANTS
1601 Fifth Avenue, Suite 500
Seattle, Washington 98101
Tel: 206.505.3400
www.bhcconsultants.com

REVIEWED BY SPU/WATER ENGINEERING ..... 20.....
REVIEWED BY SPU/DRAINAGE ..... 20.....
APPROVED BY SDOT STREET IMPROVEMENT PERMITTING ..... 20.....

APPROVED FOR ADVERTISING
LIZ ALZEER
DEPARTMENT OF FINANCE & ADMINISTRATIVE SERVICES
SEATTLE, WASHINGTON . . . . . 20 . .
BY: . . . . . .
CITY PURCHASING & CONTRACTING SERVICES DIRECTOR

INITIALS AND DATE		
DESIGNED	JSG	12/20/2018
CHECKED	JRG	12/20/2018
DRAWN	GOC	12/20/2018
CHECKED	PLS	12/20/2018

INITIALS AND DATE	
REVIEWED:	
DES.	CONST.
SDOT	PROJ. MGR.
RECEIVED	
REVISED AS BUILT	

ALL WORK SHALL BE DONE IN ACCORDANCE WITH THE CITY OF SEATTLE STANDARD PLANS AND SPECIFICATIONS AND OTHER DOCUMENTS CALLED FOR IN SECTION 0-02.3 OF THE PROJECT MANUAL.

JEFFREY S. GIBSON, STATE OF WASHINGTON, REGISTERED PROFESSIONAL ENGINEER, 35080, 12-20-18

Seattle Public Utilities
ORDINANCE NO. 125475 PW NO. 2018-064
FUND: DWS
SCALE: NONE

PUMP STATION NO. 22 RETROFIT AND FORCE MAIN REPLACEMENT

JOB NO. PC C315071 R/W CO
VAULT PLAN NO. 776-474
SHEET 51 OF 71

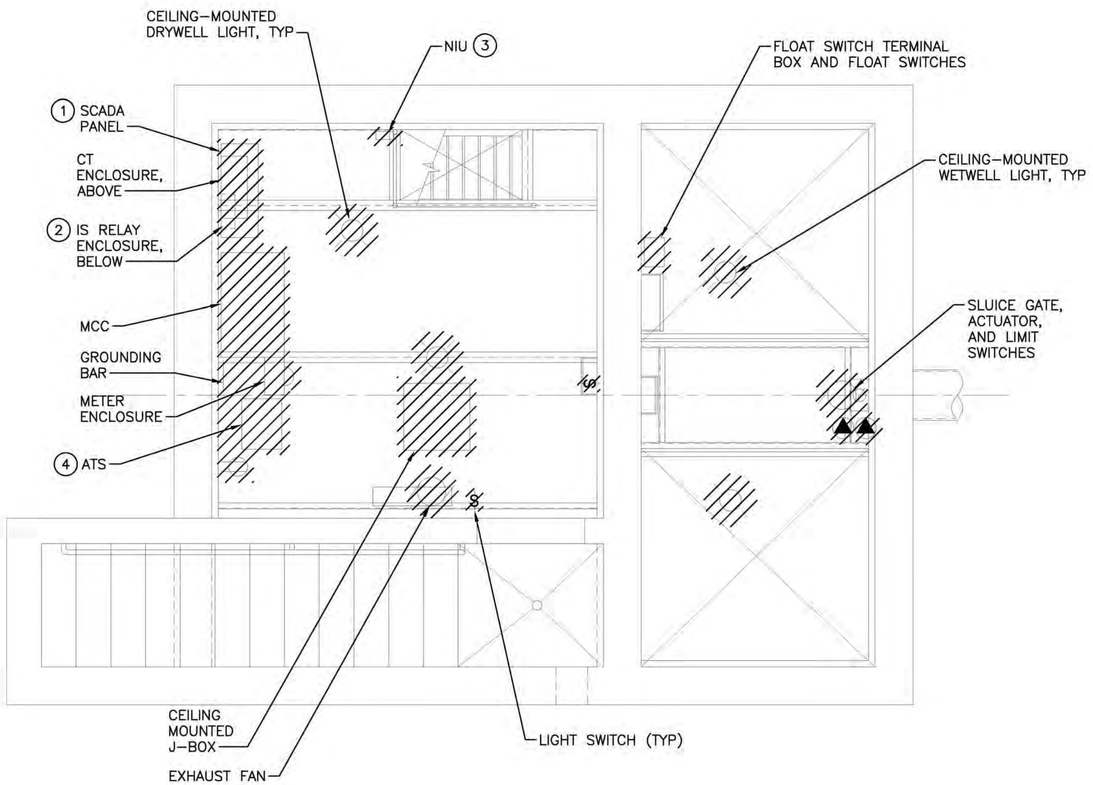

UPPER LEVEL DEMO PLAN
1/2" = 1'–0"

N

2 1 0 2 4
SCALE IN FEET

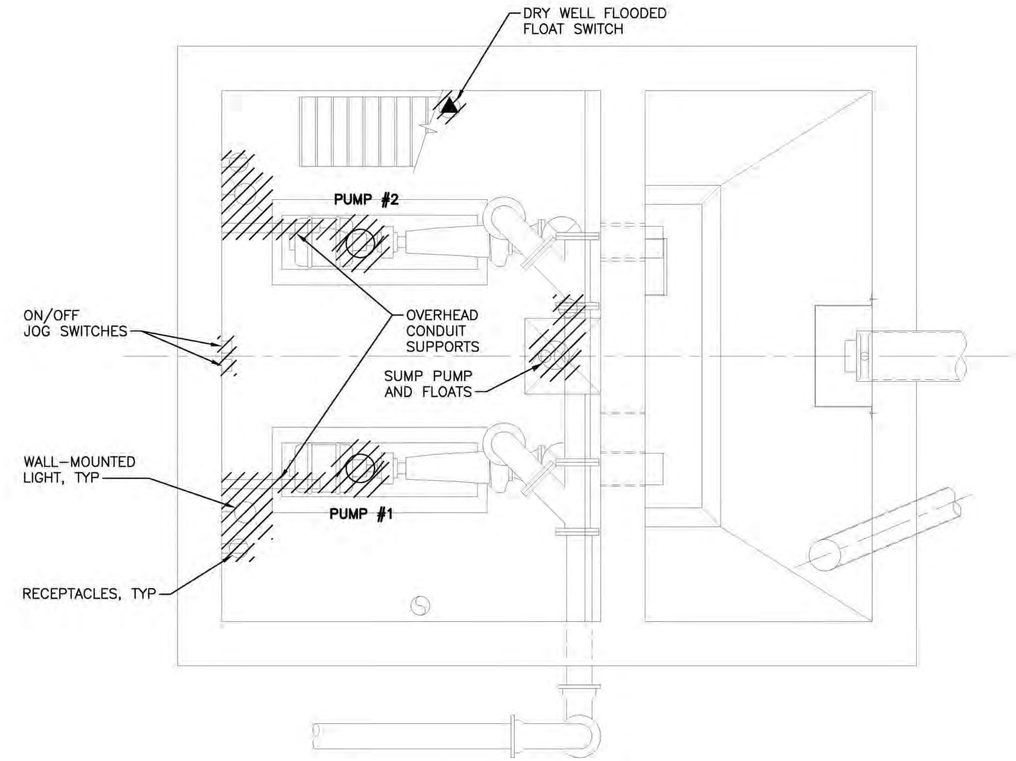

LOWER LEVEL DEMO PLAN
1/2" = 1'–0"

N

2 1 0 2 4
SCALE IN FEET

NOTES:

1. UNLESS OTHERWISE NOTED, REMOVE ALL EXPOSED EQUIPMENT, ENCLOSURES, J–BOXES, LIGHTS, SWITCHES, RECEPTACLES, WIRE WAYS, CONDUIT, WIRE, AND SUPPORTS.
2. SEAL ALL PENETRATIONS BETWEEN WET WELL AND DRY WELL WITH NON–SHRINK GROUT. SEE STRUCTURAL DRAWINGS.
3. COORDINATE DELIVERY OF SALVAGED EQUIPMENT WITH OWNER'S RESIDENT ENGINEER. DELIVER SALVAGED EQUIPMENT TO OWNER'S WAREHOUSE.
4. SALVAGE GENERATOR AND FUEL TANK TO OWNER. SEE EXISTING SITE PLAN AND CONSTRUCTION PHASING NOTES ON E–2.

NOTES:

(1) SALVAGE PLC SCADA CONTROL PANEL TO OWNER
(2) REMOVE, PROTECT, AND RE–INSTALL INTRINSICALLY–SAFE RELAY ENCLOSURE.
(3) REMOVE, PROTECT, AND RE–INSTALL NIU.
(3) SALVAGE ATS TO OWNER.

ELECTRICAL DEMOLITION PLANS
E–3

MARK	DATE	NATURE REVISIONS	MADE	CHK'D	REV'D

VAULT SERIAL NO.

S:\Cad\Seattle Public Utilities\17-10503 Mag PS22 Retrofit Design\dwgs\E3-261-1009_P-Elect Demo Plans.dwg
psimon Dec-20-18 12:02pm

000–000–0

CDM Smith
14432 SE Eastgate Way
Suite 100
Bellevue, WA 98007
Tel: (425) 519-8300

BHC CONSULTANTS
1601 Fifth Avenue, Suite 500
Seattle, Washington 98101
Tel: 206.505.3400
www.bhcconsultants.com

REVIEWED BY SPU/WATER ENGINEERING ..... 20.....
REVIEWED BY SPU/DRAINAGE ..... 20.....
APPROVED BY SDOT STREET IMPROVEMENT PERMITTING ..... 20.....

APPROVED FOR ADVERTISING
LIZ ALZEER
DEPARTMENT OF FINANCE & ADMINISTRATIVE SERVICES
SEATTLE, WASHINGTON . . . . . 20 . . .
BY: . . . . . .
CITY PURCHASING & CONTRACTING SERVICES DIRECTOR

INITIALS AND DATE		
DESIGNED	JSG	12/20/2018
CHECKED	JRG	12/20/2018
DRAWN	GOC	12/20/2018
CHECKED	PLS	12/20/2018

INITIALS AND DATE	
REVIEWED:	
DES.	CONST.
SDOT	PROJ. MGR.
RECEIVED	
REVISED AS BUILT	

ALL WORK SHALL BE DONE IN ACCORDANCE WITH THE CITY OF SEATTLE STANDARD PLANS AND SPECIFICATIONS AND OTHER DOCUMENTS CALLED FOR IN SECTION 0–02.3 OF THE PROJECT MANUAL.

JEFFREY S. GIBSON
STATE OF WASHINGTON
REGISTERED PROFESSIONAL ENGINEER
12-20-18

Seattle Public Utilities
ORDINANCE NO. 125475 PW NO. 2018–064
FUND: DWS
SCALE: 1/2" = 1'–0"

PUMP STATION NO. 22 RETROFIT AND FORCE MAIN REPLACEMENT

JOB NO. PC C315071 R/W CO
VAULT PLAN NO. 776–474
SHEET 52 OF 71

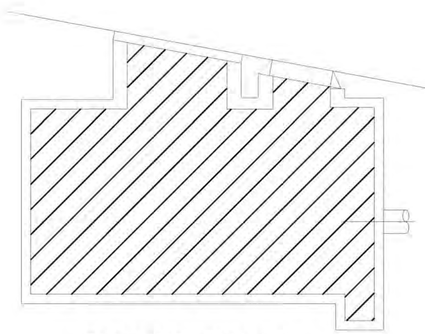

BYPASS VAULT

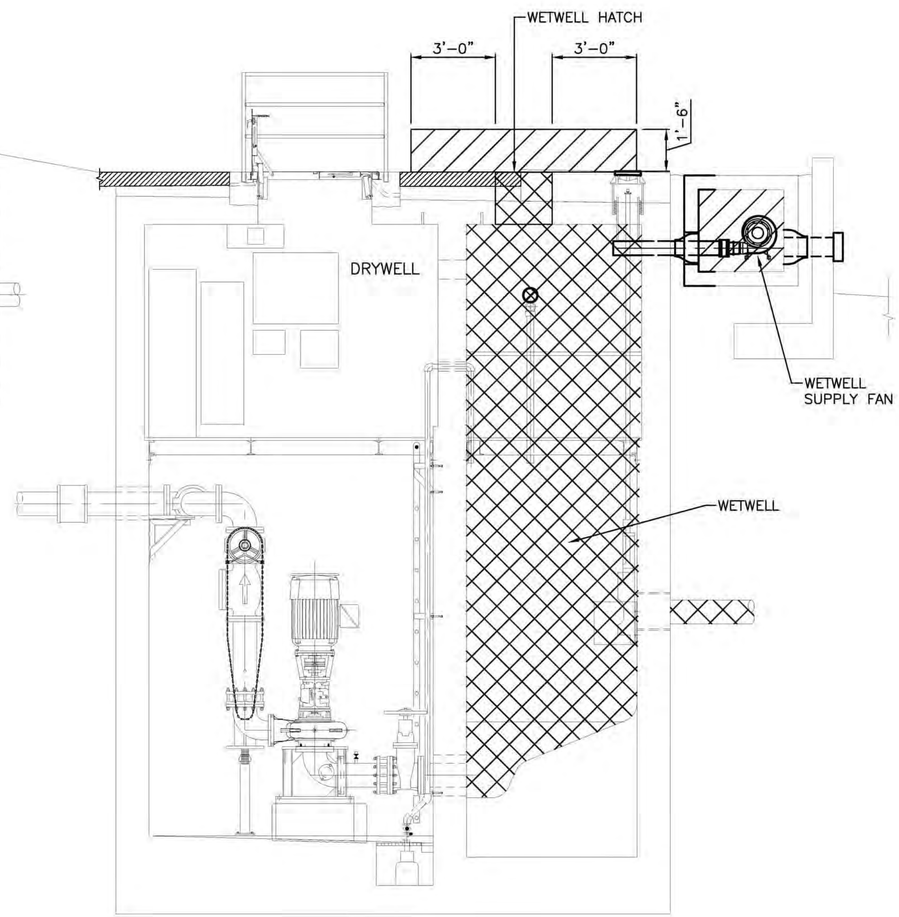

PUMP STATION

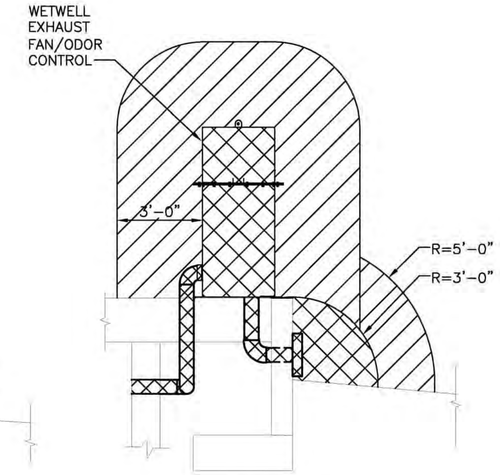

ODOR CONTROL SYSTEM

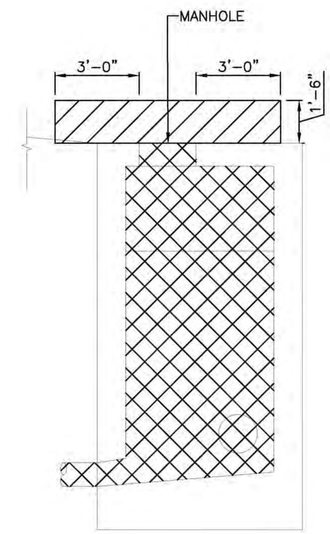

MH010-159
CSO CONTROL STRUCTURE

NOTES:

1. DRYWELL SHALL BE CONTINUOUSLY VENTILATED AT 12 AIR CHANGES PER HOUR WITH BOTH SUPPLY AND EXHAUST FANS PER NFPA-820.
2. WETWELL AND MH010-159 ARE HIGHLY CORROSIVE AREAS.
3. WETWELL, MH010-159, BYPASS VAULT, AND ALL EXTERIOR LOCATIONS ARE WET AREAS.

LEGEND:

- CLASS 1, DIV. 1
- CLASS 1, DIV. 2

ELECTRICAL AREA CLASSIFICATION
E-4

VAULT SERIAL NO.	DATE	MARK	NATURE REVISIONS	MADE	CHK'D	REV'D

S:\Cad\Seattle Public Utilities\17-10503 Mag PS22 Retrofit Design\dwgs\E4-261-1009_P-Electrical Area Classification.dwg
pslmon Dec-20-18 12:03pm

000-000-0

CDM Smith
14432 SE Eastgate Way
Suite 100
Bellevue, WA 98007
Tel: (425) 519-8300

BHC CONSULTANTS
1601 Fifth Avenue, Suite 500
Seattle, Washington 98101
Tel: 206.505.3400
www.bhcconsultants.com

REVIEWED BY SPU/WATER ENGINEERING ..... 20.....
REVIEWED BY SPU/DRAINAGE ..... 20.....
APPROVED BY SDOT STREET IMPROVEMENT PERMITTING ..... 20.....

APPROVED FOR ADVERTISING
LIZ ALZEER
DEPARTMENT OF FINANCE & ADMINISTRATIVE SERVICES
SEATTLE, WASHINGTON . . . . . 20 . .
BY: . . . . . .
CITY PURCHASING & CONTRACTING SERVICES DIRECTOR

INITIALS AND DATE		INITIALS AND DATE	
DESIGNED JSG	12/20/2018	REVIEWED: DES.	CONST.
CHECKED JRG	12/20/2018	SDOT	PROJ. MGR.
DRAWN ASC	12/20/2018	RECEIVED	
CHECKED PLS	12/20/2018	REVISED AS BUILT	

ALL WORK SHALL BE DONE IN ACCORDANCE WITH THE CITY OF SEATTLE STANDARD PLANS AND SPECIFICATIONS AND OTHER DOCUMENTS CALLED FOR IN SECTION 0-02.3 OF THE PROJECT MANUAL.

JEFFREY S. GIBSON — STATE OF WASHINGTON — 45002 — REGISTERED PROFESSIONAL ENGINEER — 12-20-18

Seattle Public Utilities
ORDINANCE NO. 125475 PW NO. 2018-064
FUND: DWS
SCALE: 1/2" = 1'-0"

PUMP STATION NO. 22 RETROFIT AND FORCE MAIN REPLACEMENT

JOB NO. PC C315071 R/W CO
VAULT PLAN NO. 776-474
SHEET 53 OF 71

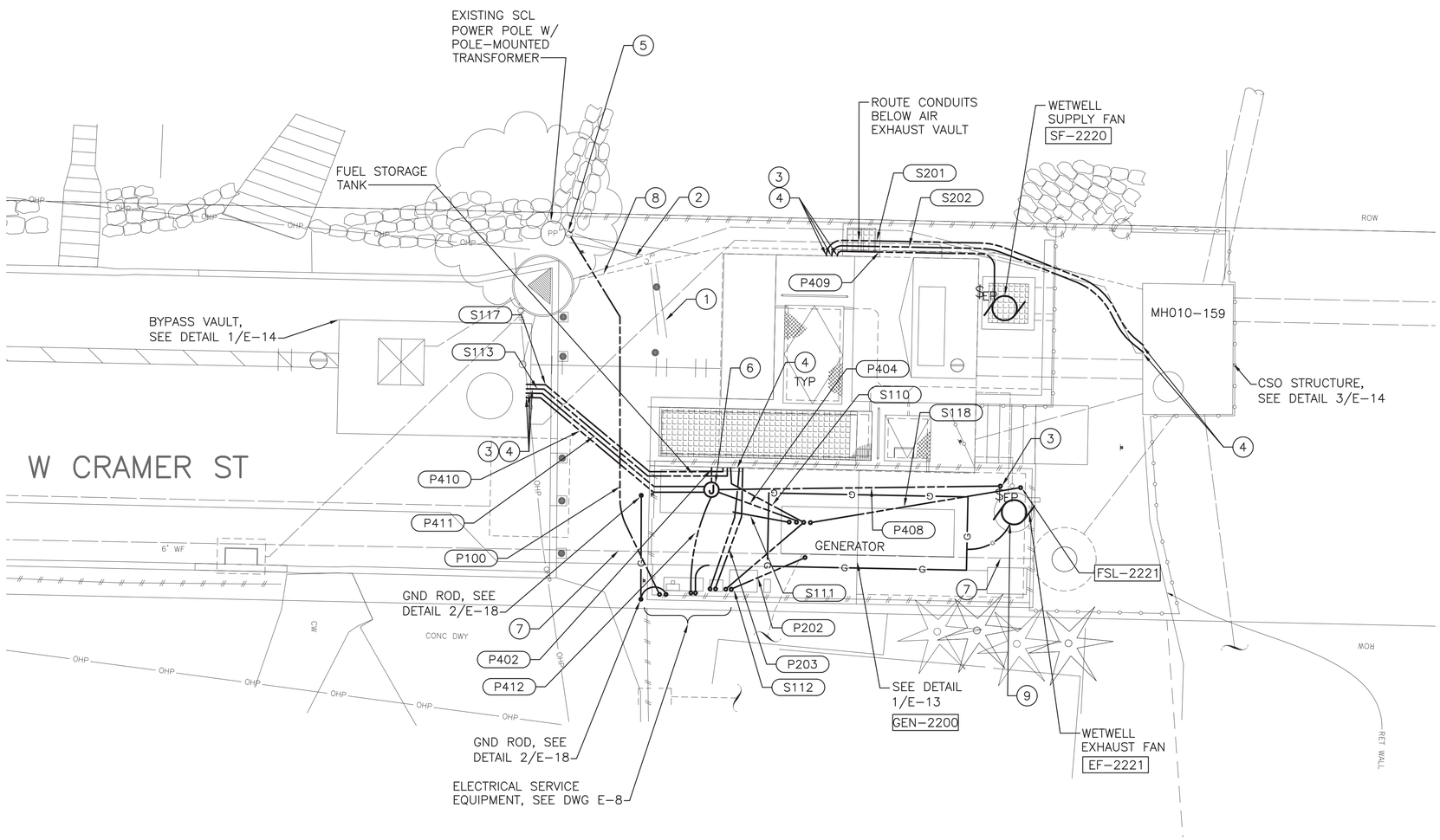

SITE ELECTRICAL PLAN

N

5 2.5 0 5 10
SCALE IN FEET

NOTES:

1. REFER TO SHEET E–2 FOR CONSTRUCTION PHASING REQUIREMENTS.
2. REFER TO SHEET E–4 FOR AREA CLASSIFICATION BOUNDARIES.
3. LOCATE EX SEWER PRIOR TO DRIVING GROUND RODS OR TRENCHING FOR CONDUIT.

KEY NOTES:

1. PROTECT EXISTING SERVICE LATERAL CONDUIT UNTIL AFTER CUTOVER TO NEW ELECTRICAL SERVICE.
2. PROTECT EXISTING TELECOMMUNICATIONS CONDUIT.
3. PROVIDE SEAL OFF FITTINGS ON CONDUITS CROSSING HAZARDOUS LOCATION BOUNDARIES.
4. CORE DRILL FOR CONDUIT PENETRATION PER DETAIL 3/E–18.
5. COORDINATE CONDUIT RISER LOCATIONS WITH SEATTLE CITY LIGHT. SEE DWG C–2.
6. JB–2213 PROVIDE 120V CONNECTION TO FUEL TANK OVERFILL ALARM PANEL.
7. PROTECT EXISTING SEWER PIPE.
8. AVOID SEWER PIPE, SEE CIVIL PLANS.
9. PROVIDE #6 AWG FROM GROUNDING LUGS ON ODOR CONTROL ENCLOSURE TO GROUND RING.

PUMP STATION
ELECTRICAL SITE PLAN
E–5

VAULT SERIAL NO.	DATE	MARK	NATURE REVISIONS	MADE	CHK'D	REV'D
37295						

S:\Cad\Seattle Public Utilities\17–10503 Mag PS22 Retrofit Design\dwgs\E5–261–1009_P–Pump Station Electrical Site Plan.dwg
solsoe Dec–20–18 12:03pm

CDM Smith
14432 SE Eastgate Way
Suite 100
Bellevue, WA 98007
Tel: (425) 519-8300

BHC CONSULTANTS
1601 Fifth Avenue, Suite 500
Seattle, Washington 98101
Tel: 206.505.3400
www.bhcconsultants.com

REVIEWED BY SPU/WATER ENGINEERING ..... 20.....
REVIEWED BY SPU/DRAINAGE ..... 20.....
APPROVED BY SDOT STREET IMPROVEMENT PERMITTING ..... 20.....

APPROVED FOR ADVERTISING
LIZ ALZEER
DEPARTMENT OF FINANCE & ADMINISTRATIVE SERVICES
SEATTLE, WASHINGTON 20
BY: .....
CITY PURCHASING & CONTRACTING SERVICES DIRECTOR

INITIALS AND DATE			INITIALS AND DATE	
DESIGNED	JSG	12/20/2018	REVIEWED:	
CHECKED	JRG	12/20/2018	DES.	CONST.
			SDOT	PROJ. MGR.
DRAWN	SO	12/20/2018	RECEIVED	
CHECKED	PLS	12/20/2018	REVISED AS BUILT	

ALL WORK SHALL BE DONE IN ACCORDANCE WITH THE CITY OF SEATTLE STANDARD PLANS AND SPECIFICATIONS AND OTHER DOCUMENTS CALLED FOR IN SECTION 0–02.3 OF THE PROJECT MANUAL.

JEFFREY S. GIBSON
STATE OF WASHINGTON
45080
REGISTERED PROFESSIONAL ENGINEER
12-20-18

Seattle Public Utilities
ORDINANCE NO. 125475 PW NO. 2018–064
FUND: DWS
SCALE: 1"=5'

PUMP STATION NO. 22 RETROFIT AND FORCE MAIN REPLACEMENT

JOB NO. PC C315071 R/W CO
VAULT PLAN NO. 776–474
SHEET 54 OF 71

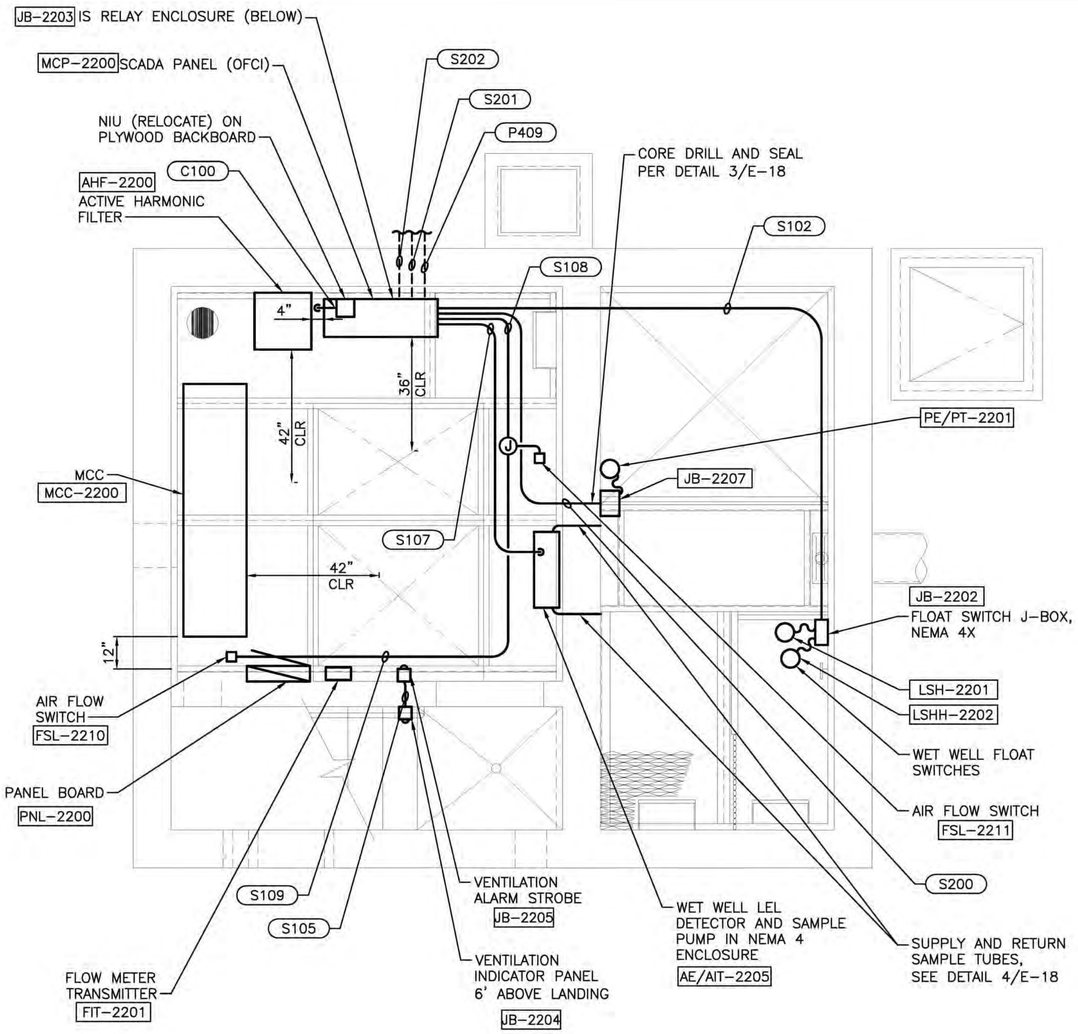

UPPER LEVEL PLAN

1/2" = 1'-0"

2 1 0 2 4

SCALE IN FEET

N

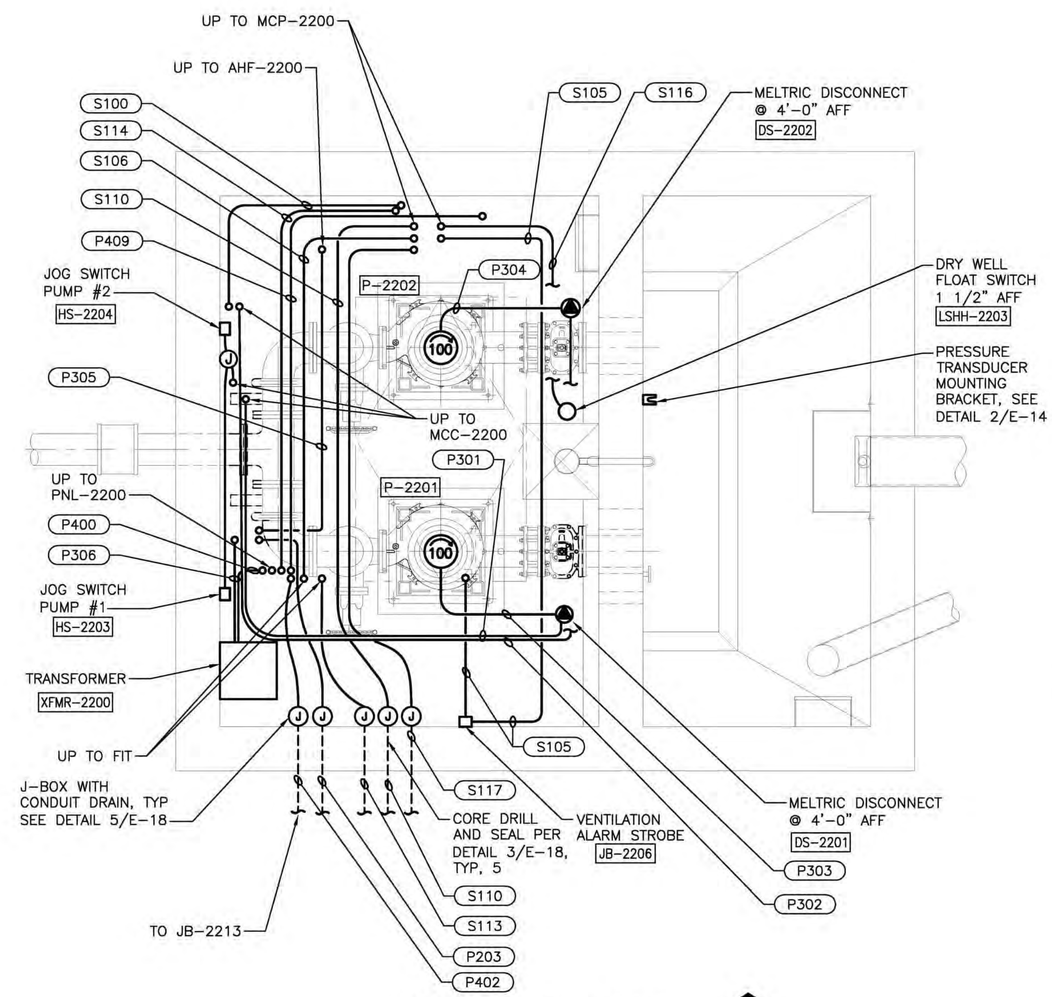

LOWER LEVEL PLAN

1/2" = 1'-0"

2 1 0 2 4

SCALE IN FEET

N

NOTES:

1. ALL CONDUIT AND SAMPLE TUBE CORES INTO WET WELL SHALL BE AT LEAST 12" ABOVE OVERFLOW ELEVATION.
2. PRESSURE TRANSDUCER AND WET WELL FLOATS SHALL BE ACCESSIBLE FROM PLATFORM GRATING. PROVIDE STAINLESS STEEL WALL BRACKETS AND STAINLESS STEEL CABLE SUPPORTS.

NOTES:

1. ROUTE CONDUITS TO AVOID GRATING AND CEILING HATCHES. DO NOT OBSTRUCT EQUIPMENT ACCESS. SEE STRUCTURAL DRAWINGS.
2. PROVIDE WIRING SIGN ON WALL ADJACENT TO EACH PUMP DISCONNECT, "WARNING DO NOT OPERATE SWITCH UNDER LOAD".
3. ALL CONDUITS TO/FROM MCC-2200 SHALL ENTER FROM THE BOTTOM.
4. ALL CONDUITS TO/FROM MCP-2200 SHALL ENTER THE ENCLOSURE FROM THE BOTTOM.

ELECTRICAL AND INSTRUMENTATION PLANS

E-6

VAULT SERIAL NO.	DATE	MARK	NATURE REVISIONS	MADE	CHK'D	REV'D

S:\Cad\Seattle Public Utilities\17-10503 Mog PS22 Retrofit Design\dwgs\E6-261-1009_P-Elect and Inst Plans.dwg
pslmon Dec-20-18 12:04pm

000-000-0

CDM Smith
14432 SE Eastgate Way
Suite 100
Bellevue, WA 98007
Tel: (425) 519-8300

BHC CONSULTANTS
1601 Fifth Avenue, Suite 500
Seattle, Washington 98101
Tel: 206.505.3400
www.bhcconsultants.com

REVIEWED BY SPU/WATER ENGINEERING ..... 20.....

REVIEWED BY SPU/DRAINAGE ..... 20.....

APPROVED BY SDOT STREET IMPROVEMENT PERMITTING ..... 20.....

APPROVED FOR ADVERTISING
LIZ ALZEER
DEPARTMENT OF FINANCE & ADMINISTRATIVE SERVICES
SEATLLE, WASHINGTON . . . . . 20 . .

BY: . . . . . .
CITY PURCHASING & CONTRACTING SERVICES DIRECTOR

INITIALS AND DATE		
DESIGNED	JSG	12/20/2018
CHECKED	JRG	12/20/2018
DRAWN	GOC	12/20/2018
CHECKED	PLS	12/20/2018

INITIALS AND DATE	
REVIEWED:	
DES.	CONST.
SDOT	PROJ. MGR.
RECEIVED	
REVISED AS BUILT	

ALL WORK SHALL BE DONE IN ACCORDANCE WITH THE CITY OF SEATTLE STANDARD PLANS AND SPECIFICATIONS AND OTHER DOCUMENTS CALLED FOR IN SECTION 0-02.3 OF THE PROJECT MANUAL.

JEFFREY S. GIBSON
STATE OF WASHINGTON
43080
REGISTERED PROFESSIONAL ENGINEER
12-20-18

Seattle Public Utilities

ORDINANCE NO. 125475 PW NO. 2018-064
FUND: DWS
SCALE: 1/2" = 1'-0"

PUMP STATION NO. 22 RETROFIT AND FORCE MAIN REPLACEMENT

JOB NO. PC C315071 R/W CO

VAULT PLAN NO. 776-474

SHEET 55 OF 71

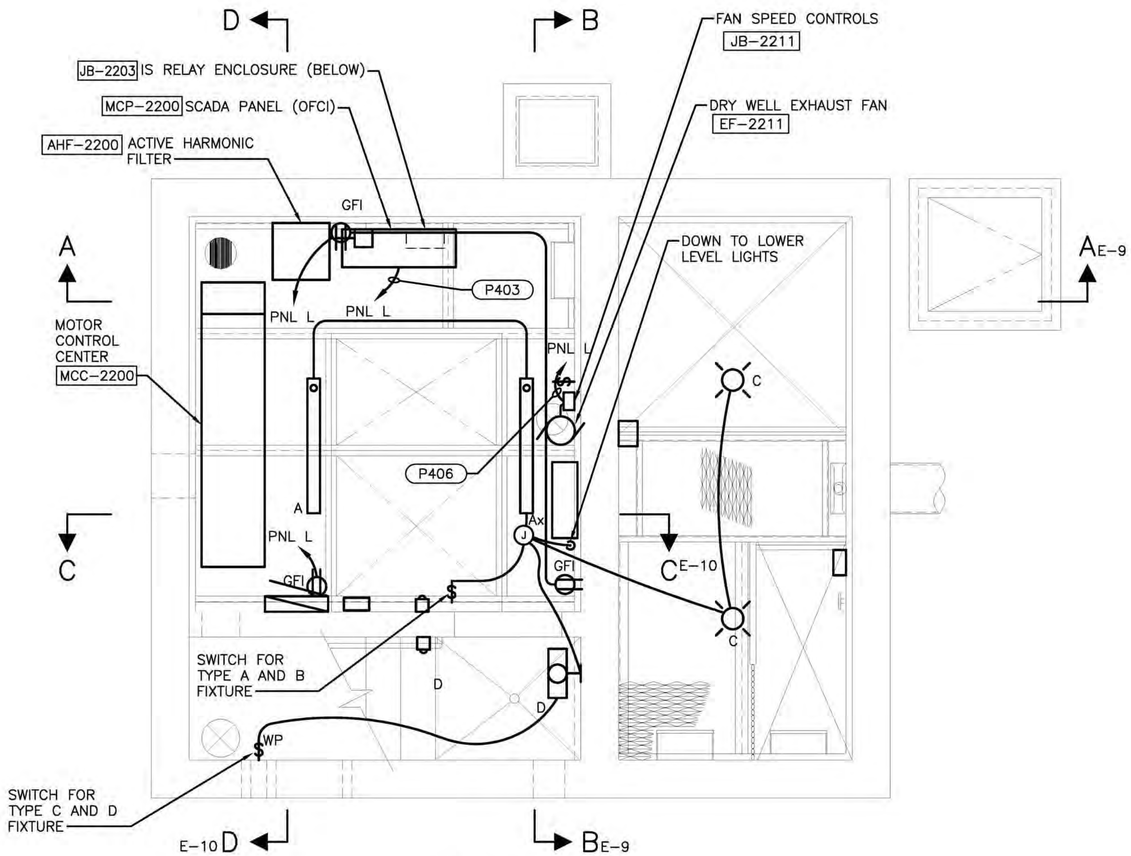

UPPER LEVEL PLAN
1/2" = 1'-0"

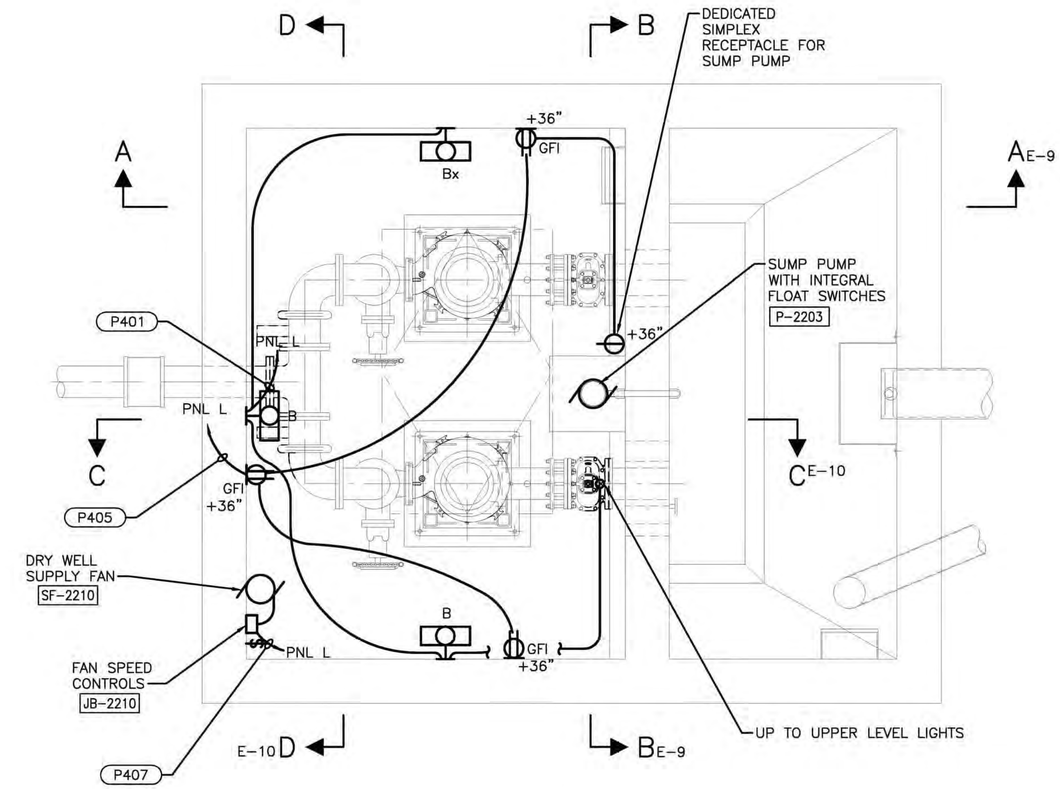

LOWER LEVEL PLAN
1/2" = 1'-0"

LIGHTING FIXTURE SCHEDULE

TYPE	LUMINAIRE	LUMENS/FIXTURE	WATTS/FIXTURE	MANUFACTURER	CATALOG NUMBER	MOUNTING	NOTES
A	LED	4100	36	COLUMBIA	LXEP 4 50 LW DFA E U	CEILING	
B	LED	5850	52	COLUMBIA	LXEP 4 50 HL DFA E U	WALL, 8' AFF	
C	LED	2250	36	CROUSE HINDS	EVLED CX2 W 701	CEILING, 3/4" THRU FEED	
D	LED	3400	33	LITHONIA	TWR 1 LED 1 50K MVOLT PE	WALL, 7' AFF	
Ax	LED	4100	36	COLUMBIA	LXEP 4 50 LW DFA E U ELL14	CEILING	WITH 1400 LUMEN BATTERY PACK
Bx	LED	5850	52	COLUMBIA	LXEP 4 50 HL DFA E U ELL14	WALL, 8' AFF	WITH 1400 LUMEN BATTERY PACK

NOTES:

1. ROUTE CONDUITS TO AVOID GRATING AND CEILING HATCHES. DO NOT OBSTRUCT EQUIPMENT ACCESS. SEE STRUCTURAL DRAWINGS.
2. ALL CONDUITS SHALL ENTER MCC-2200 AND MCP-2200 FROM THE BOTTOM.

RECEPTACLE AND LIGHTING PLANS
E-7

VAULT SERIAL NO.	DATE	MARK	NATURE REVISIONS	MADE	CHK'D	REV'D

S:\Cad\Seattle Public Utilities\17-10503 Mag PS22 Retrofit Design\dwgs\E7-261-1009_P-Recept and Lighting.dwg
psimon Dec-20-18 12:06pm

000-000-0

CDM Smith
14432 SE Eastgate Way
Suite 100
Bellevue, WA 98007
Tel: (425) 519-8300

BHC CONSULTANTS
1601 Fifth Avenue, Suite 500
Seattle, Washington 98101
Tel: 206.505.3400
www.bhcconsultants.com

REVIEWED BY SPU/WATER ENGINEERING ..... 20.....
REVIEWED BY SPU/DRAINAGE ..... 20.....
APPROVED BY SDOT STREET IMPROVEMENT PERMITTING ..... 20.....

APPROVED FOR ADVERTISING
LIZ ALZEER
DEPARTMENT OF FINANCE & ADMINISTRATIVE SERVICES
SEATTLE, WASHINGTON . . . . . 20 . . .
BY: . . . . . .
CITY PURCHASING & CONTRACTING SERVICES DIRECTOR

INITIALS AND DATE		
DESIGNED	JSG	12/20/2018
CHECKED	JRG	12/20/2018
DRAWN	GOC	12/20/2018
CHECKED	PLS	12/20/2018

INITIALS AND DATE	
REVIEWED:	
DES.	CONST.
SDOT	PROJ. MGR.
RECEIVED	
REVISED AS BUILT	

ALL WORK SHALL BE DONE IN ACCORDANCE WITH THE CITY OF SEATTLE STANDARD PLANS AND SPECIFICATIONS AND OTHER DOCUMENTS CALLED FOR IN SECTION 0-02.3 OF THE PROJECT MANUAL.

JEFFREY S. GIBSON
STATE OF WASHINGTON
REGISTERED PROFESSIONAL ENGINEER
12-20-18

Seattle Public Utilities
ORDINANCE NO. 125475 PW NO. 2018-064
FUND: DWS
SCALE: 1/2" = 1'-0"

PUMP STATION NO. 22 RETROFIT AND FORCE MAIN REPLACEMENT

JOB NO. PC C315071 R/W CO
VAULT PLAN NO. 776-474
SHEET 56 OF 71

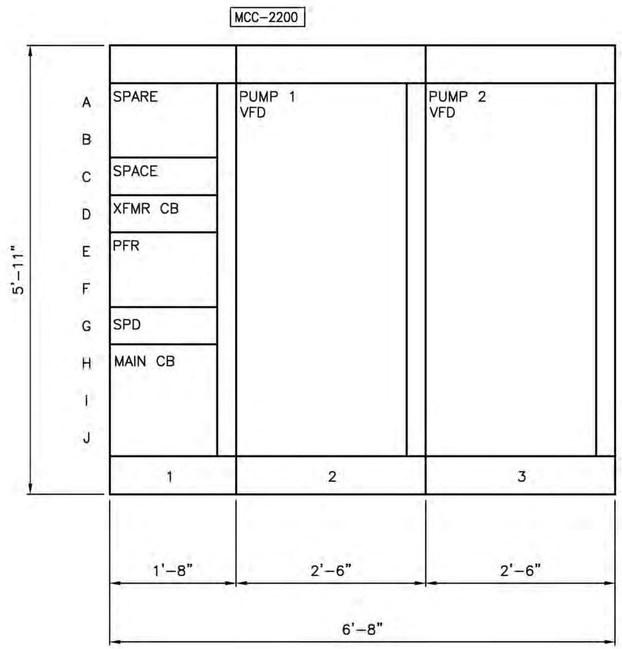

NOTES:

1. PROVIDE NEMA TYPE 1G (GENERAL PURPOSE WITH GASKETED DOORS) ENCLOSURE.
2. DIMENSIONS SHOWN ARE NOMINAL. MAXIMUM HEIGHT, INCLUDING WIRE WAYS, IS 84". MAXIMUM WIDTH IS 90".
3. ALL CONDUITS SHALL ENTER MCC THROUGH BOTTOM. TOP ENTRY IS PROHIBITED.

MCC ELEV

1" = 1'-0"

1 ½ 0 1 2

SCALE IN FEET

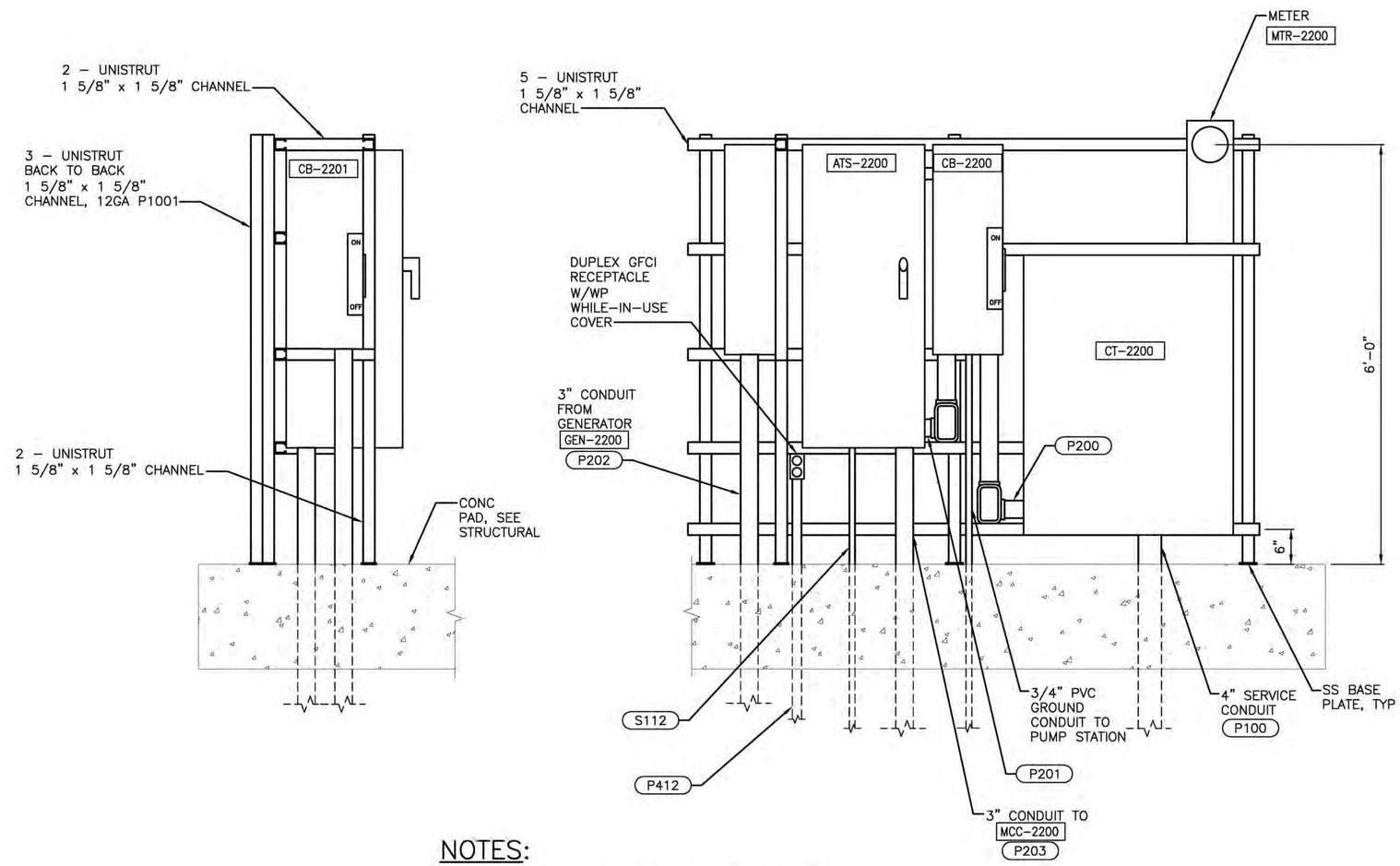

NOTES:

1. ALL MOUNTING HARDWARE SHALL BE STAINLESS STEEL.
2. ANCHOR SUPPORT STRUTS TO CONCRETE WITH CONCRETE ANCHORS. DO NOT ATTACH TO WOOD FENCE.

SERVICE ENTRANCE EQUIPMENT ELEV

1" = 1'-0"

1 ½ 0 1 2

SCALE IN FEET

ELEVATIONS
E-8

VAULT SERIAL NO.	DATE	MARK	NATURE REVISIONS	MADE	CHK'D	REV'D

S:\Cad\Seattle Public Utilities\17-10503 Mog PS22 Retrofit Design\dwgs\E8-261-1009_P-Motor Control Center Elevations.dwg
psimon Dec-20-18 12:06pm

000-000-0

CDM Smith
14432 SE Eastgate Way
Suite 100
Bellevue, WA 98007
Tel: (425) 519-8300

BHC CONSULTANTS
1601 Fifth Avenue, Suite 500
Seattle, Washington 98101
Tel: 206.505.3400
www.bhcconsultants.com

REVIEWED BY SPU/WATER ENGINEERING ..... 20.....
REVIEWED BY SPU/DRAINAGE ..... 20.....
APPROVED BY SDOT STREET IMPROVEMENT PERMITTING ..... 20.....

APPROVED FOR ADVERTISING
LIZ ALZEER
DEPARTMENT OF FINANCE & ADMINISTRATIVE SERVICES
SEATTLE, WASHINGTON . . . . . 20 . .
BY: . . . . . .
CITY PURCHASING & CONTRACTING SERVICES DIRECTOR

INITIALS AND DATE		
DESIGNED	JSG	12/20/2018
CHECKED	JRG	12/20/2018
DRAWN	ASC	12/20/2018
CHECKED	PLS	12/20/2018

INITIALS AND DATE	
REVIEWED:	
DES.	CONST.
SDOT	PROJ. MGR.
RECEIVED	
REVISED AS BUILT	

ALL WORK SHALL BE DONE IN ACCORDANCE WITH THE CITY OF SEATTLE STANDARD PLANS AND SPECIFICATIONS AND OTHER DOCUMENTS CALLED FOR IN SECTION 0-02.3 OF THE PROJECT MANUAL.

JEFFREY S. GLASCOE
STATE OF WASHINGTON
53080
REGISTERED PROFESSIONAL ENGINEER
12-20-18

Seattle Public Utilities
ORDINANCE NO. 125475 PW NO. 2018-064
FUND: DWS
SCALE: 1/2" = 1'-0"

PUMP STATION NO. 22 RETROFIT AND FORCE MAIN REPLACEMENT

JOB NO. PC C315071 R/W CO
VAULT PLAN NO. 776-474
SHEET 57 OF 71

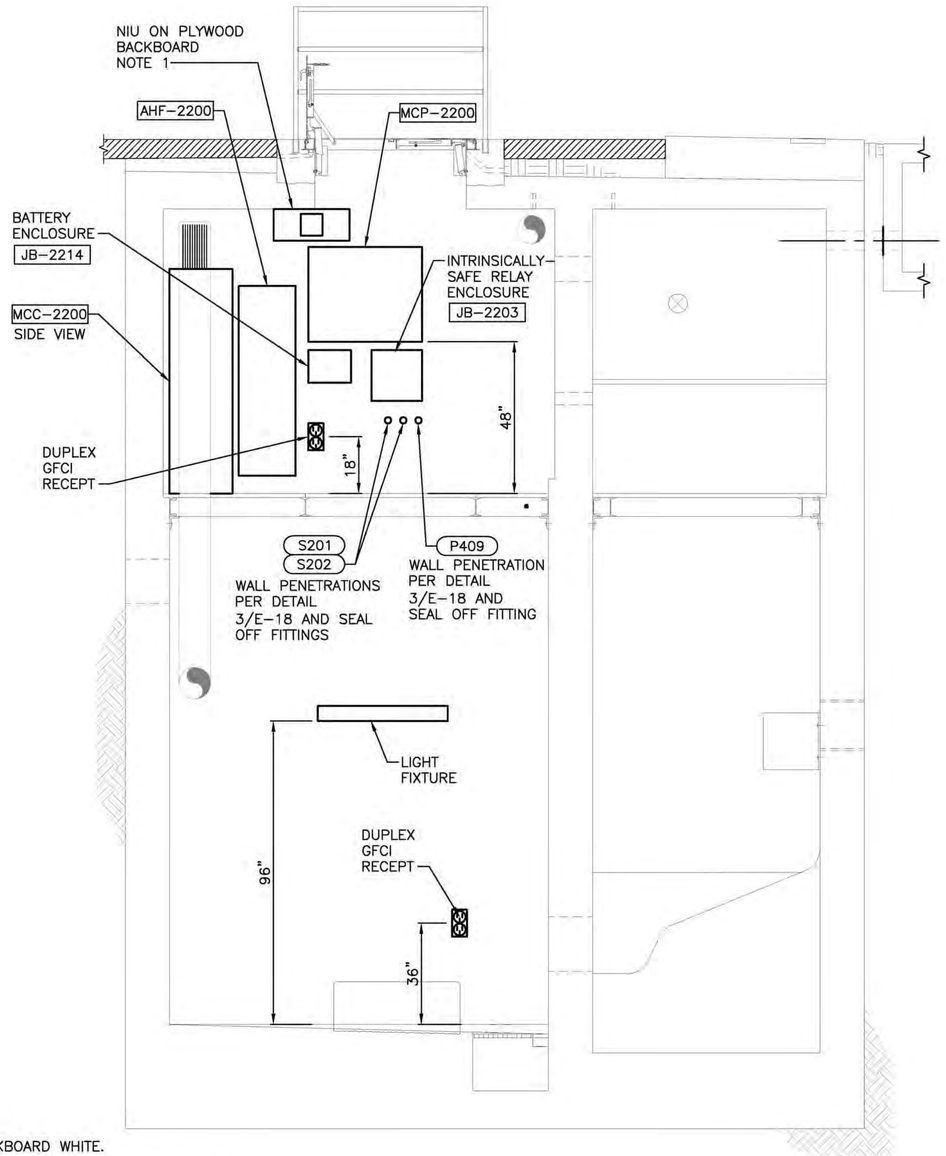

NOTES:

1. PAINT BACKBOARD WHITE.
2. CONDUITS AND SAMPLE TUBES NOT SHOWN.

SECTION A–A

1/2" = 1'–0"

2 1 0 2 4

SCALE IN FEET

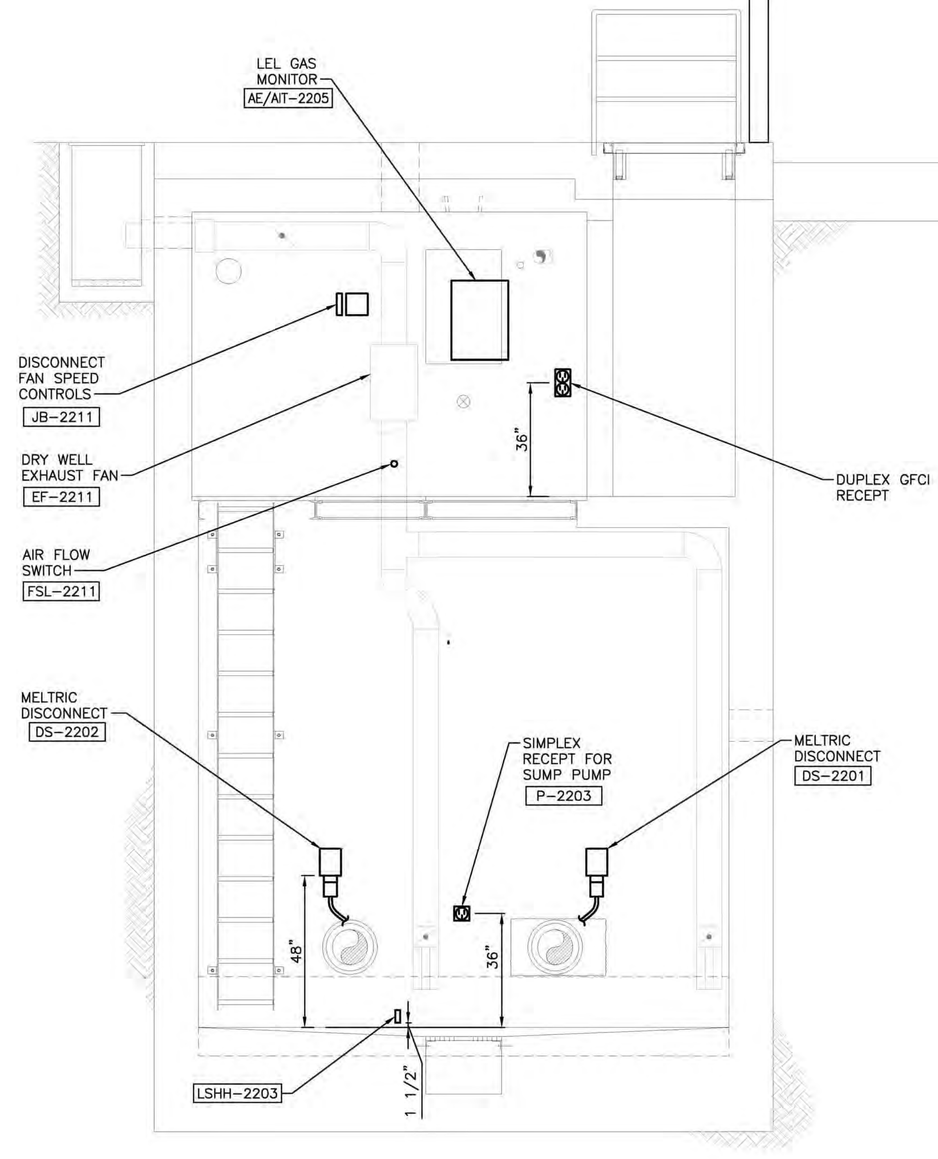

SECTION B–B

1/2" = 1'–0"

2 1 0 2 4

SCALE IN FEET

VAULT SERIAL NO.	DATE	MARK	NATURE REVISIONS	MADE	CHK'D	REV'D

S:\Cad\Seattle Public Utilities\17-10503 Mcg PS22 Retrofit Design\dwgs\E9-261-1009_P-Electrical-Sections.dwg
psimon Dec-20-18 12:07pm

000 — 000 — 0

ELECTRICAL SECTIONS
E–9

CDM Smith
14432 SE Eastgate Way
Suite 100
Bellevue, WA 98007
Tel: (425) 519-8300

BHC CONSULTANTS
1601 Fifth Avenue, Suite 500
Seattle, Washington 98101
Tel: 206.505.3400
www.bhcconsultants.com

REVIEWED BY SPU/WATER ENGINEERING ..... 20.....
REVIEWED BY SPU/DRAINAGE ..... 20.....
APPROVED BY SDOT STREET IMPROVEMENT PERMITTING ..... 20.....

APPROVED FOR ADVERTISING
LIZ ALZEER
DEPARTMENT OF FINANCE & ADMINISTRATIVE SERVICES
SEATTLE, WASHINGTON . . . . . 20 . .

BY: . . . . . .
CITY PURCHASING & CONTRACTING SERVICES DIRECTOR

INITIALS AND DATE		
DESIGNED	JSG	12/20/2018
CHECKED	JRG	12/20/2018
DRAWN	SO	12/20/2018
CHECKED	PLS	12/20/2018

INITIALS AND DATE	
REVIEWED:	
DES.	CONST.
SDOT	PROJ. MGR.
RECEIVED	
REVISED AS BUILT	

ALL WORK SHALL BE DONE IN ACCORDANCE WITH THE CITY OF SEATTLE STANDARD PLANS AND SPECIFICATIONS AND OTHER DOCUMENTS CALLED FOR IN SECTION 0-02.3 OF THE PROJECT MANUAL.

JEFFREY S. GIBSON — STATE OF WASHINGTON — 53080 — REGISTERED PROFESSIONAL ENGINEER — 12-20-18

Seattle Public Utilities

ORDINANCE NO. 125475 PW NO. 2018-064
FUND: DWS
SCALE: 1/2" = 1'–0"

PUMP STATION NO. 22 RETROFIT AND FORCE MAIN REPLACEMENT

JOB NO. PC C315071 R/W CO

VAULT PLAN NO. 776-474

SHEET 58 OF 71

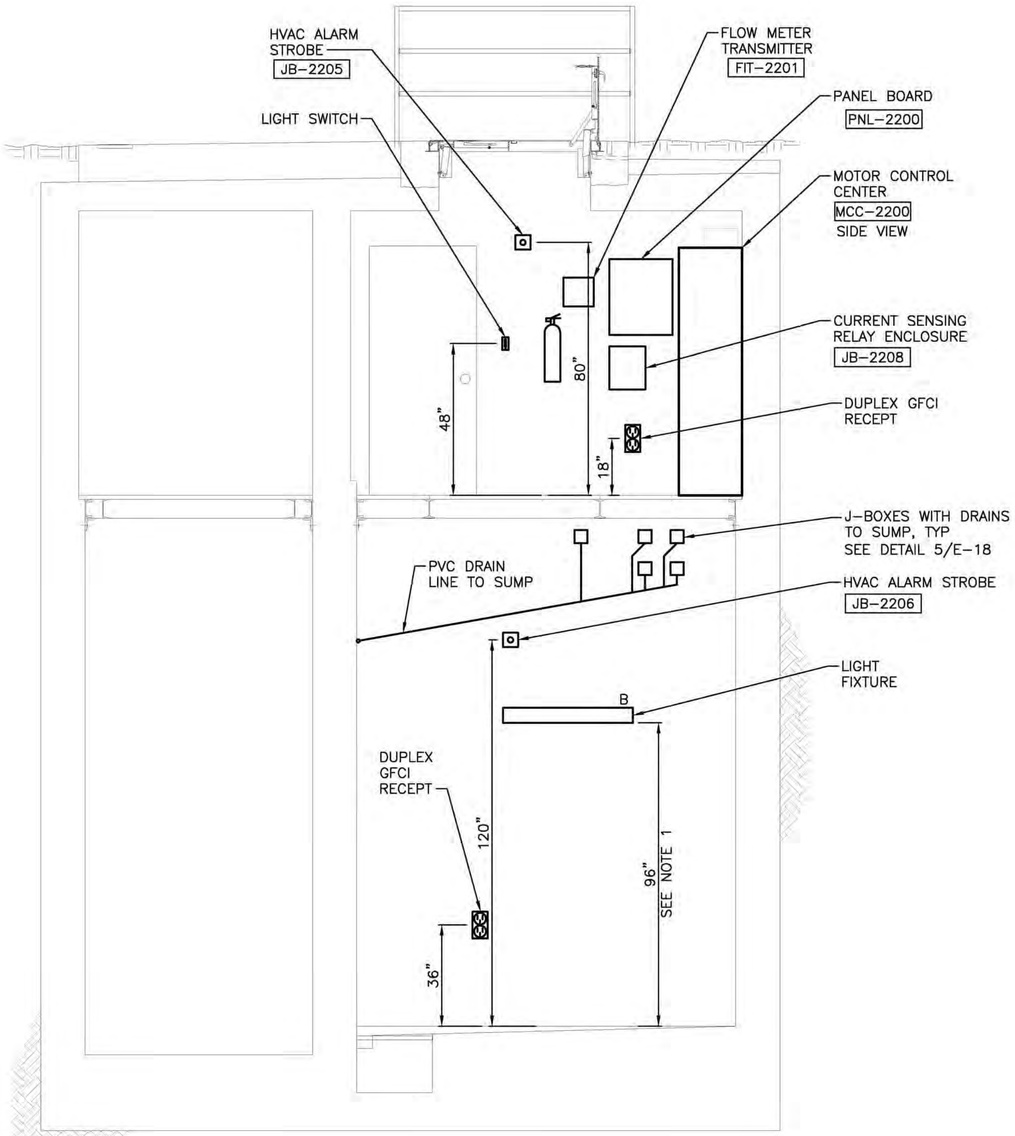

SECTION C–C

1/2" = 1'-0"

2 1 0 2 4

SCALE IN FEET

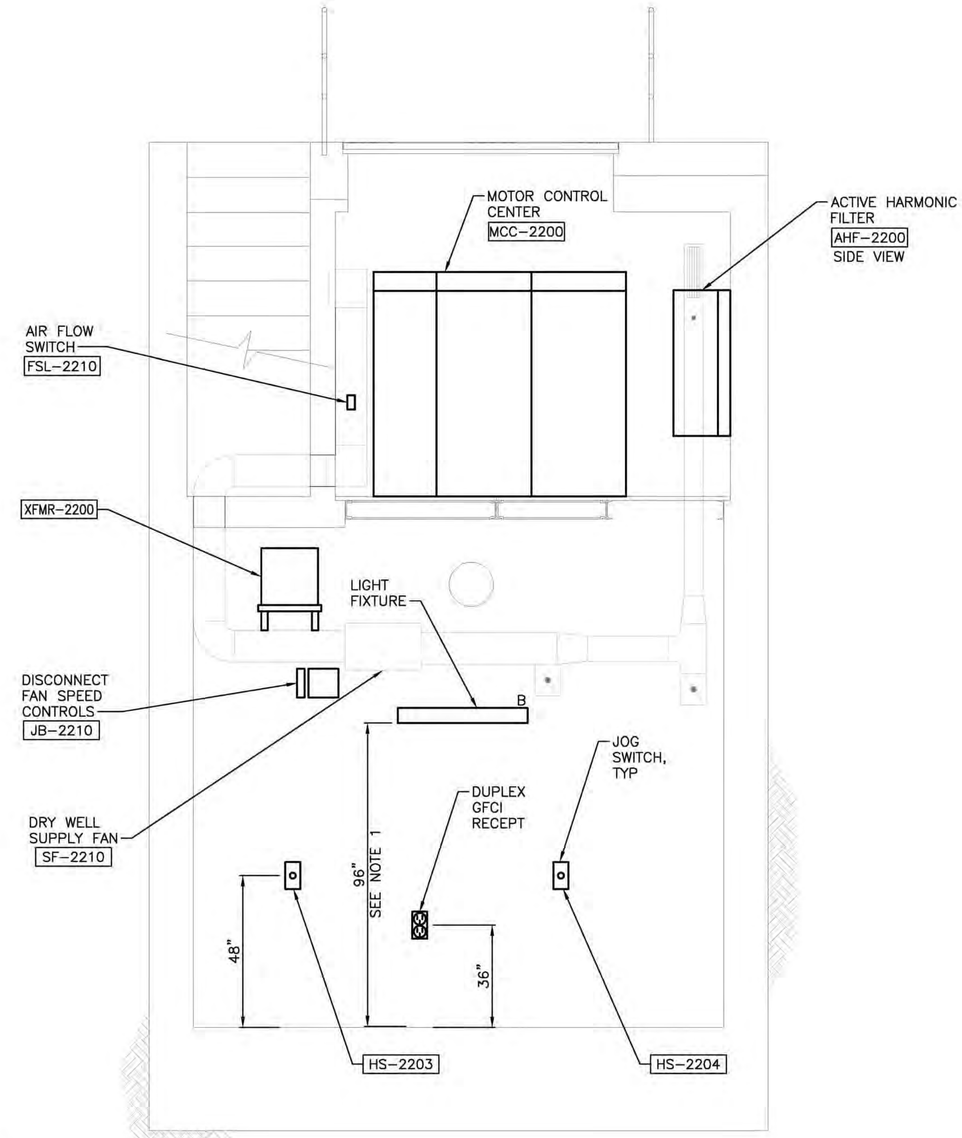

NOTES:

1. FLOOR ELEVATION IS NOT CONSTANT. MOUNT LIGHTS AT A COMMON ELEVATION.
2. CONDUIT NOT SHOWN.

SECTION D–D

1/2" = 1'-0"

2 1 0 2 4

SCALE IN FEET

NOTES:

1. FLOOR ELEVATION IS NOT CONSTANT. SET LIGHTS AT A COMMON ELEVATION.

ELECTRICAL SECTIONS

E–10

VAULT SERIAL NO.	DATE	MARK	NATURE REVISIONS	MADE	CHK'D	REV'D

S:\Cad\Seattle Public Utilities\17-10503 Mcg PS22 Retrofit Design\dwgs\E10-261-1009_P-Electrical-Sections.dwg
psimon Dec-20-18 12:08pm

CDM Smith
14432 SE Eastgate Way
Suite 100
Bellevue, WA 98007
Tel: (425) 519-8300

BHC CONSULTANTS
1601 Fifth Avenue, Suite 500
Seattle, Washington 98101
Tel: 206.505.3400
www.bhcconsultants.com

REVIEWED BY SPU/WATER ENGINEERING ..... 20.....

REVIEWED BY SPU/DRAINAGE ..... 20.....

APPROVED BY SDOT STREET IMPROVEMENT PERMITTING ..... 20.....

APPROVED FOR ADVERTISING
LIZ ALZEER
DEPARTMENT OF FINANCE & ADMINISTRATIVE SERVICES
SEATLE, WASHINGTON . . . . . 20 . .

BY: . . . . . .
CITY PURCHASING & CONTRACTING SERVICES DIRECTOR

INITIALS AND DATE		
DESIGNED	JSG	12/20/2018
CHECKED	JRG	12/20/2018
DRAWN	SO	12/20/2018
CHECKED	PLS	12/20/2018

INITIALS AND DATE	
REVIEWED:	
DES.	CONST.
SDOT	PROJ. MGR.
RECEIVED	
REVISED AS BUILT	

ALL WORK SHALL BE DONE IN ACCORDANCE WITH THE CITY OF SEATTLE STANDARD PLANS AND SPECIFICATIONS AND OTHER DOCUMENTS CALLED FOR IN SECTION 0-02.3 OF THE PROJECT MANUAL.

JEFFREY S. GIBSON
STATE OF WASHINGTON
43080
REGISTERED PROFESSIONAL ENGINEER
12-20-18

Seattle Public Utilities

ORDINANCE NO. 125475 PW NO. 2018-064
FUND: DWS
SCALE: 1/2" = 1'-0"

PUMP STATION NO. 22 RETROFIT AND FORCE MAIN REPLACEMENT

JOB NO. PC C315071 R/W CO

VAULT PLAN NO. 776-474

SHEET 59 OF 71

PNL–2200 (PNL L)

JOB:	PUMP STATION 22	REV:
LOCATION:		DATE:

POLE NO.	C.B. AMP	C.B. POLES	SERVICE	LOAD KVA TOTAL	TYPE	A	B		TYPE	TOTAL	SERVICE	C.B. AMP	C.B. POLES	POLE NO.
1	20	1	SCADA PANEL MCP–2200	0.50	C	2.50			N	2.00	GEN BLOCK HEATER	30	1	2
3	20	1	LIGHTS	0.40	L		0.40							4
5	20	1	GFCI RECEPT, TANK ALARM	0.72	R	1.08			R	0.36	GEN RECEPT/BATTERY CHARGER	20	1	6
7	20	1	SUMP PUMP P–2203	0.90	M		1.40		M	0.50	SUMP PUMP P–2204	20	1	8
9	15	1	EF–2211	0.80	M	0.80						20	1	10
11	15	1	SF–2210	0.80	M		0.80					20	1	12
13	20	1	EF–2221	1.70	M	1.70								14
15	15	1	SF–2220	0.90	M		0.90							16
17	15	1												18
19	15	1												20
21	15	1							C		SPD	30	2	23
23	15	1							C					24
CONNECTED LOAD PER PHASE						6.10	3.50							

LOAD SUMMARY	CONN. KVA	DEMAND FACTOR	DEMAND KVA
TYPE "L": LIGHTIING RODS	0.40	125%	0.50
TYPE "C": CONTINUOUS LOADS	0.50	125%	0.63
TYPE "R": RECEPTACLES (FIRST 10KVA)	1.08	100%	1.08
TYPE "R": RECEPTACLES (OVER 10KVA)		50%	
TYPE "M": LARGEST MOTOR LOAD	1.70	125%	2.13
TYPE "M": OTHER MOTOR LOADS	3.90	100%	3.90
TYPE "N": NON–CONTINUOUS LOADS	2.00	100%	2.00
TYPE "K": KITCHEN LOADS			
TYPE "S": SUB–FEED (INCLUDED IN LOADS ABOVE)			
TOTAL	9.58		10.23

PANEL FEATURES	
VOLTS:	120/240V, 1PH, 3W
MAIN C.B.:	80 AMPS
BUS:	100 AMPS
POLES:	24
DEMAND AMPS	43

BRKR FEATURES	
MOUNTING:	SURFACE
AIC RATING:	10,000

CONDUIT SCHEDULE

TAG	FROM	TO	CONDUIT SIZE	CONDUCTORS	COMMENTS
P100	SCL POWER POLE	CT–2200	4"	BY SCL	225A SERVICE, PER SCL REQUIREMENTS
P101	CT–2200	MTR–2200	1"	BY SCL	
P200	CT–2200	CB–2200	3"	4#4/0	
P201	CB–2200	CB–2201	3"	4#4/0, #3 GND	
P202	GEN–2200	ATS–2200	3"	4#4/0, #3 GND	
P203	ATS–2200	MCC–2200	3"	4#4/0, #3 GND	
P204	CB–2201	ATS–2200	3"	4#4/0, #3 GND	
P301	MCC–2200	DS–2201 RECEPT	2"	3#3/0, #3 GND, 2#14	PUMP 1 FEEDER
P302	MCC–2200	DS–2202 RECEPT	2"	3#3/0, #3 GND, 2#14	PUMP 2 FEEDER
P303	DS–2201 PLUG	M–2201	2" LFMC	3#3/0, #3 GND	PUMP 1 PLUG CONNECTION
P304	DS–2202 PLUG	M–2202	2" LFMC	3#3/0, #3 GND	PUMP 2 PLUG CONNECTION
P305	MCC–2200	AHF–2200	2"	4#1/0, #3 GND, 8#12	ACTIVE HARMONIC FILTER
P306	MCC–2200	XFMR–2200	1"	2#6, #10 GND	
P400	XFMR–2200	PNL–2200	2"	3#2, #8 GND	
P401	PNL–2200	LIGHTS	3/4"	2#12, #12 GND	
P402	PNL–2200	JB–2213	1 1/2"	2#8, 10#10, #8 GND	
P403	PNL–2200	MCP–2200 SCADA PNL	3/4"	2#12, #12 GND	
P404	JB–2213	GENERATOR	3/4"	2#10, 2#12, #10 GND	BLOCK HEATER, GEN RECEPT
P405	PNL–2200	P–2203	3/4"	4#12, #12 GND	SUMP PUMP RECEPT, GFCI RECEPTS
P406	PNL–2200	EF–2211	3/4"	2#12, #12 GND	DRY WELL EXHAUST FAN
P407	PNL–2200	SF–2210	3/4"	2#12, #12 GND	DRY WELL SUPPLY FAN
P408	JB–2213	EF–2221	1"	2#12, #12 GND	WET WELL EXHAUST FAN
P409	PNL–2200	SF–2220	1"	2#12, #12 GND	WET WELL SUPPLY FAN
P410	JB–2213	P–2204	1"	2#12, #12 GND	BYPASS VAULT SUMP PUMP
P411	JB–2213	BYPASS VAULT	1"	2#12, #12 GND	LIGHTS
P412	JB–2213	GFCI OUTLET	3/4"	2#12, #12 GND	
S100	MCP–2200	MCC–2200	1 1/2"	30#14	
S101	MCP–2200	MCC–2200	1 1/2"	8 TSP #18	
S102	JB–2203	JB–2202	2"	MANUF CABLES	WET WELL FLOAT SWITCHES
S103	MCP–2200	JB–2203	1"	8#14	INTRINSICALLY SAFE RELAYS
S104	MCP–2200	JB–2203	1"	3 TSP #18	INTRINSICALLY SAFE RELAYS
S105	MCP–2200	JB–2204/2205/2206	3/4"	3#14	VENTILATION GREEN/AMBER LIGHTS
S106	MCP–2200	FIT–2201	1"	2#14, TSP#18	24 VDC FLOW METER TRANSMITTER
S107	MCP–2200	AE/AIT–2205	1"	8#14, TSP#18	
S108	MCP–2200	FSL–2210	3/4"	6#14	
S109	FSL–2210	FSL–2211	3/4"	3#14	
S110	MCP–2200	GEN–2200	1"	20#14	GENERATOR & ATS ALARMS TO SCADA
S111	JB–2212	GEN–2200	3/4"	6#14	LOW FUEL LEVEL, HIGH LEVEL, LEAK
S112	ATS–2200	GEN–2200	1"	8#14	GENERATOR START CONTROLS, ATS ALARMS TO SCADA
S113	FIT–2201	FE–2201	1"	FACTORY CABLE	FLOW METER CABLE
S114	MCP–2200	PNL–2200	1"	12#14	CURRENT SENSING RELAYS
S115	MCP–2200	HS–2203/HS–2204	3/4"	4#14	JOG SWITCHES
S116	MCP–2200	LSHH–2203	3/4"	2#14	DRY WELL FLOOD SWITCH
S117	JB–2203	LSHH–2204	1"	2#14	FLOOD SWITCH IN BYPASS VAULT
S118	FSL–2221	GEN–2200	3/4"	3#14	
S200	JB–2203	JB–2207/PT–2201	3/4"	FACTORY CABLE	WET WELL LEVEL
S201	JB–2203	LT–2203	1"	FACTORY CABLE	OVERFLOW VAULT LEVEL, INTRINSICALLY SAFE
S202	JB–2203	PT–2202	1"	FACTORY CABLE	OVERFLOW VAULT LEVEL, INTRINSICALLY SAFE
C100	NIU	MCP–2200	1"	COMM CABLE	

NOTES:

1. MANUFACTURER'S CABLES FOR FLOAT SWITCHES AND PRESSURE TRANSDUCERS SHALL NOT BE SPLICED. PROVIDE ENOUGH CABLE TO REACH IS RELAY ENCLOSURE WITH AN EXTRA 10' COILED IN WET WELL FOR EACH CABLE.
2. PROVIDE SEAL OFF FITTINGS FOR ALL CONDUITS ENTERING HAZARDOUS LOCATIONS PER NEC. SEE SHEET E–4.

SCHEDULES
E–11

VAULT SERIAL NO.	DATE	MARK	NATURE REVISIONS	MADE	CHK'D	REV'D

S:\Cad\Seattle Public Utilities\17-10503 Mcg PS22 Retrofit Design\dwgs\E11-261-1009_P-Schedules.dwg
psimon Dec-20-18 12:08pm

000 — 000 — 0

CDM Smith
14432 SE Eastgate Way
Suite 100
Bellevue, WA 98007
Tel: (425) 519-8300

BHC CONSULTANTS
1601 Fifth Avenue, Suite 500
Seattle, Washington 98101
Tel: 206.505.3400
www.bhcconsultants.com

REVIEWED BY SPU/WATER ENGINEERING ..... 20.....
REVIEWED BY SPU/DRAINAGE ..... 20.....
APPROVED BY SDOT STREET IMPROVEMENT PERMITTING ..... 20.....

APPROVED FOR ADVERTISING
LIZ ALZEER
DEPARTMENT OF FINANCE & ADMINISTRATIVE SERVICES
SEATTLE, WASHINGTON . . . . . 20 . .
BY: . . . . . .
CITY PURCHASING & CONTRACTING SERVICES DIRECTOR

INITIALS AND DATE		
DESIGNED	JSG	12/20/2018
CHECKED	JRG	12/20/2018
DRAWN	ASC	12/20/2018
CHECKED	PLS	12/20/2018

INITIALS AND DATE	
REVIEWED:	
DES.	CONST.
SDOT	PROJ. MGR.
RECEIVED	
REVISED AS BUILT	

ALL WORK SHALL BE DONE IN ACCORDANCE WITH THE CITY OF SEATTLE STANDARD PLANS AND SPECIFICATIONS AND OTHER DOCUMENTS CALLED FOR IN SECTION 0-02.3 OF THE PROJECT MANUAL.

JEFFREY S. GIBSON — STATE OF WASHINGTON — 43080 — REGISTERED PROFESSIONAL ENGINEER — 12-20-18

Seattle Public Utilities
ORDINANCE NO. 125475 PW NO. 2018-064
FUND: DWS
SCALE: NONE

PUMP STATION NO. 22 RETROFIT AND FORCE MAIN REPLACEMENT

JOB NO. PC C315071 R/W CO
VAULT PLAN NO. 776-474
SHEET 60 OF 71

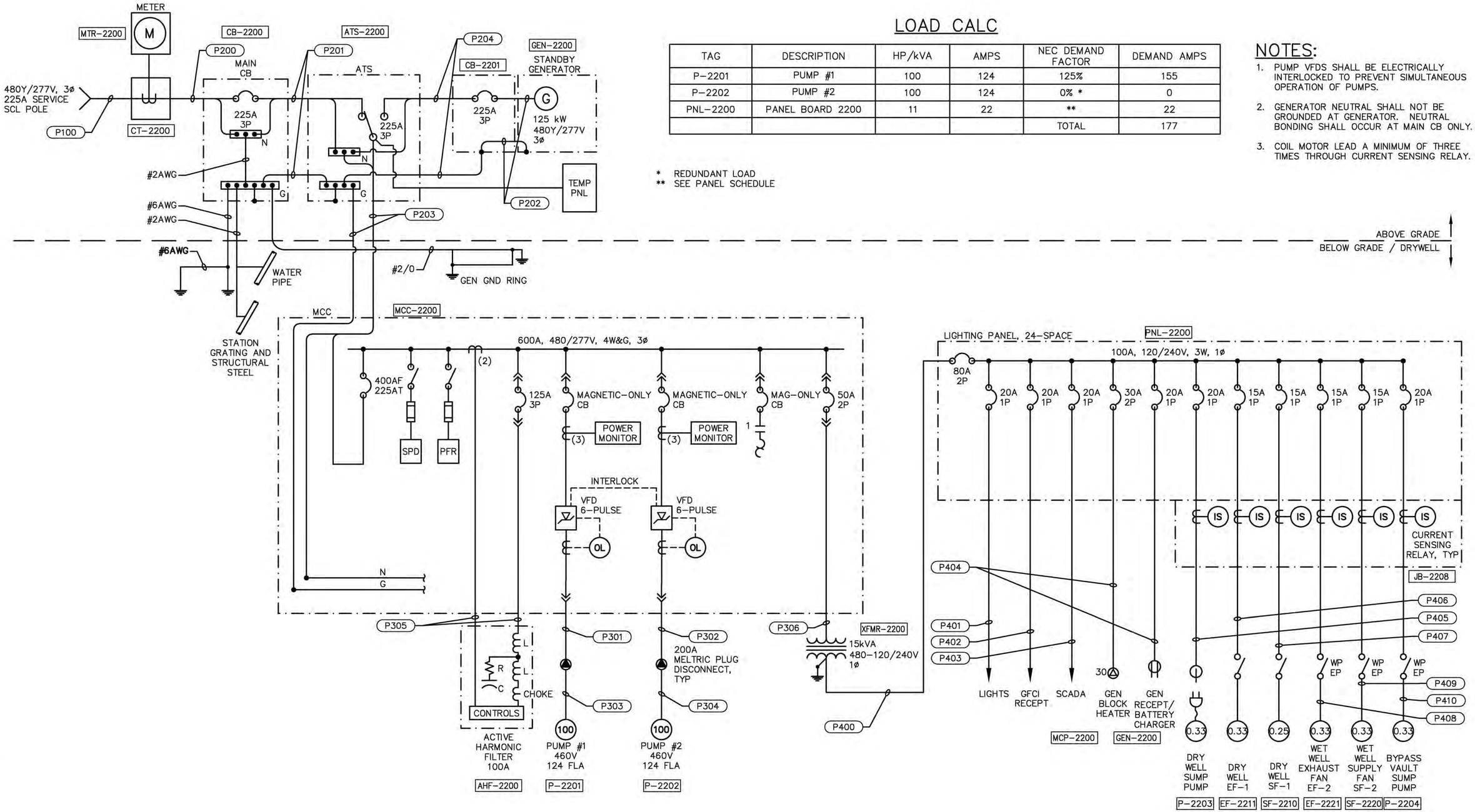

LOAD CALC

TAG	DESCRIPTION	HP/kVA	AMPS	NEC DEMAND FACTOR	DEMAND AMPS
P-2201	PUMP #1	100	124	125%	155
P-2202	PUMP #2	100	124	0% *	0
PNL-2200	PANEL BOARD 2200	11	22	**	22
				TOTAL	177

* REDUNDANT LOAD
** SEE PANEL SCHEDULE

NOTES:

1. PUMP VFDS SHALL BE ELECTRICALLY INTERLOCKED TO PREVENT SIMULTANEOUS OPERATION OF PUMPS.
2. GENERATOR NEUTRAL SHALL NOT BE GROUNDED AT GENERATOR. NEUTRAL BONDING SHALL OCCUR AT MAIN CB ONLY.
3. COIL MOTOR LEAD A MINIMUM OF THREE TIMES THROUGH CURRENT SENSING RELAY.

ONE-LINE DIAGRAM
E-12

VAULT SERIAL NO.	DATE	MARK	NATURE REVISIONS	MADE	CHK'D	REV'D

S:\Cad\Seattle Public Utilities\17-10503 Mag PS22 Retrofit Design\dwgs\E12-261-1009_P-One-Line Diagrm.dwg
psimon Dec-20-18 12:09pm

CDM Smith
14432 SE Eastgate Way
Suite 100
Bellevue, WA 98007
Tel: (425) 519-8300

BHC CONSULTANTS
1601 Fifth Avenue, Suite 500
Seattle, Washington 98101
Tel: 206.505.3400
www.bhcconsultants.com

REVIEWED BY SPU/WATER ENGINEERING ..... 20.....
REVIEWED BY SPU/DRAINAGE ..... 20.....
APPROVED BY SDOT STREET IMPROVEMENT PERMITTING ..... 20.....

APPROVED FOR ADVERTISING
LIZ ALZEER
DEPARTMENT OF FINANCE & ADMINISTRATIVE SERVICES
SEATTLE, WASHINGTON . . . . . 20 . .
BY: . . . . . .
CITY PURCHASING & CONTRACTING SERVICES DIRECTOR

INITIALS AND DATE		INITIALS AND DATE	
DESIGNED JSG	12/20/2018	REVIEWED: DES.	CONST.
CHECKED JRG	12/20/20118	SDOT	PROJ. MGR.
DRAWN GOC	12/20/2018	RECEIVED	
CHECKED PLS	12/20/2018	REVISED AS BUILT	

ALL WORK SHALL BE DONE IN ACCORDANCE WITH THE CITY OF SEATTLE STANDARD PLANS AND SPECIFICATIONS AND OTHER DOCUMENTS CALLED FOR IN SECTION 0-02.3 OF THE PROJECT MANUAL.

JEFFREY S. GIBSON
STATE OF WASHINGTON
43000
REGISTERED PROFESSIONAL ENGINEER
12-20-18

Seattle Public Utilities
ORDINANCE NO. 125475 PW NO. 2018-064
FUND: DWS
SCALE: NONE

PUMP STATION NO. 22 RETROFIT AND FORCE MAIN REPLACEMENT

JOB NO. PC C315071
R/W
CO
VAULT PLAN NO. 776-474
SHEET 61 OF 71

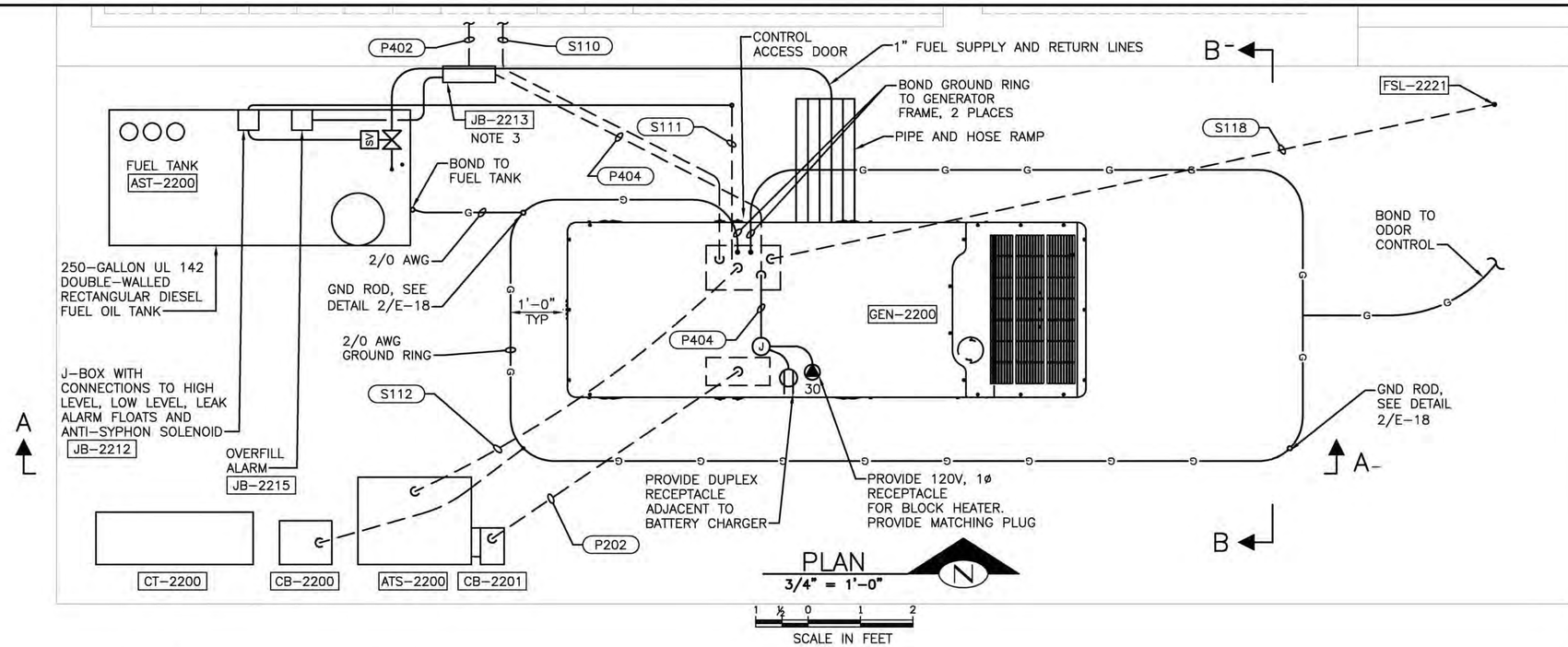

PLAN
3/4" = 1'-0"

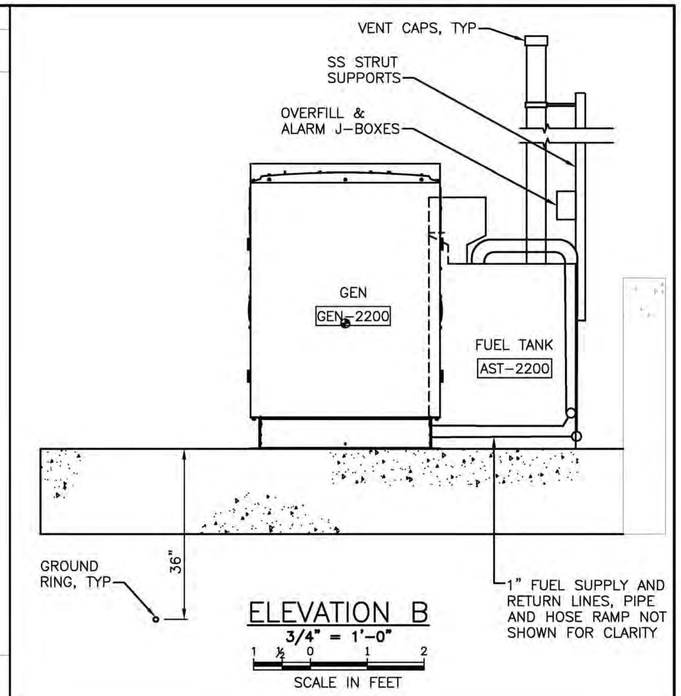

ELEVATION B
3/4" = 1'-0"

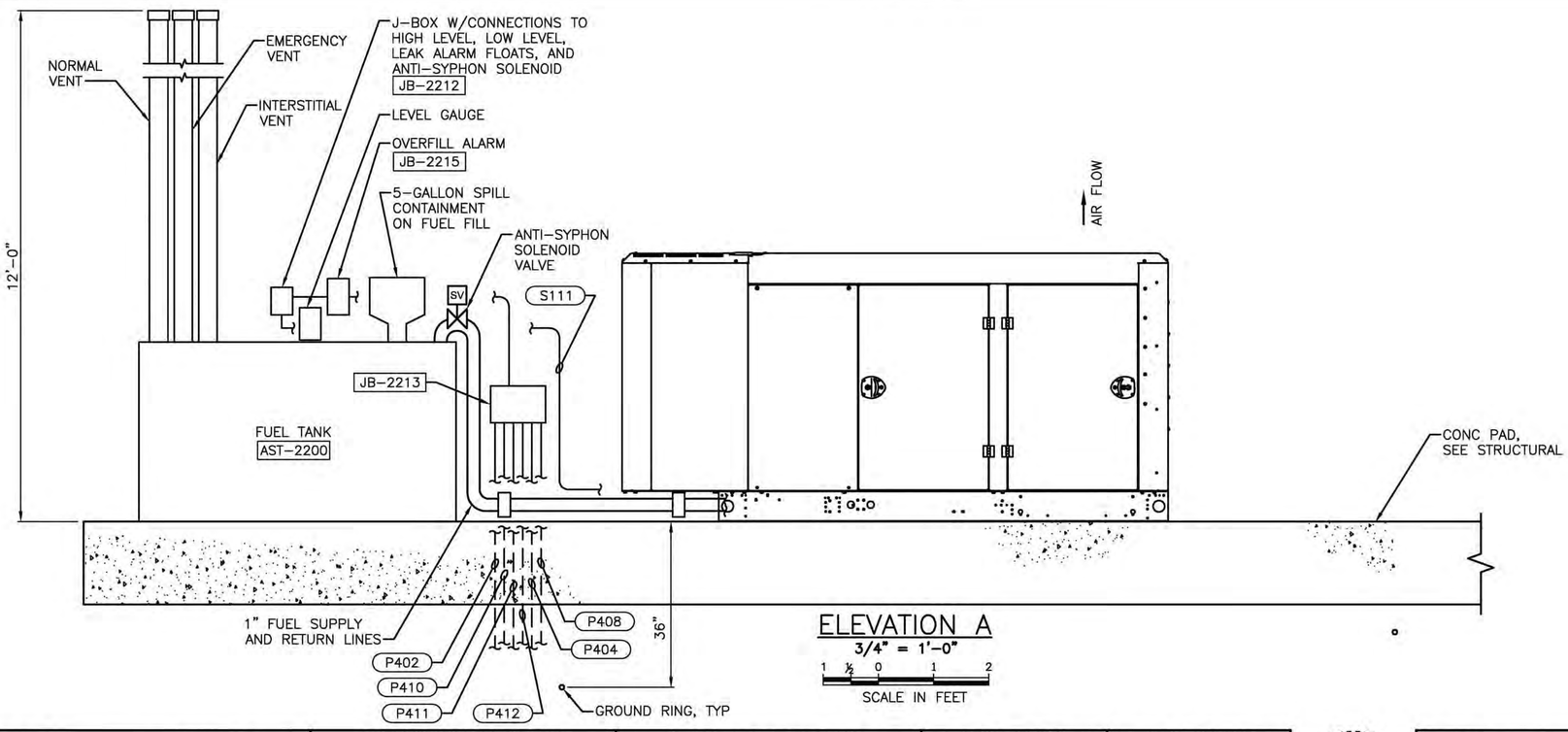

ELEVATION A
3/4" = 1'-0"

NOTES:

1. EQUIPMENT VENDOR SHALL BE RESPONSIBLE TO DESIGN AND PROVIDE ANCHOR BOLTS FOR MOUNTING GENERATOR TO PAD. ANCHOR BOLT MINIMUM EMBEDMENT TO PAD SHALL BE 1'-0".
2. FUEL TANK SHALL BE BOLTED TO PAD. PROVIDE ANCHOR BOLTS, PER EQUIPMENT VENDOR, MINIMUM EMBEDMENT TO PAD SHALL BE 8".
3. SEE E-5 FOR ROUTING OF ADDITIONAL POWER CONDUITS.

STANDBY GENERATOR PLAN
ELEVATIONS, AND DETAILS
E-13

VAULT SERIAL NO.	DATE	MARK	NATURE REVISIONS	MADE	CHK'D	REV'D

S:\Cad\Seattle Public Utilities\17-10503 Mag PS22 Retrofit Design\dwgs\E13-261-1009_P-Generator Plan, Elevations and Details.dwg
psimon Dec-20-18 12:09pm

CDM Smith
14432 SE Eastgate Way
Suite 100
Bellevue, WA 98007
Tel: (425) 519-8300

BHC CONSULTANTS
1601 Fifth Avenue, Suite 500
Seattle, Washington 98101
Tel: 206.505.3400
www.bhcconsultants.com

REVIEWED BY SPU/WATER ENGINEERING ..... 20.....
REVIEWED BY SPU/DRAINAGE ..... 20.....
APPROVED BY SDOT STREET IMPROVEMENT PERMITTING ..... 20.....

APPROVED FOR ADVERTISING
LIZ ALZEER
DEPARTMENT OF FINANCE & ADMINISTRATIVE SERVICES
SEATTLE, WASHINGTON . . . . . 20 . .
BY: . . . . . .
CITY PURCHASING & CONTRACTING SERVICES DIRECTOR

INITIALS AND DATE			INITIALS AND DATE	
DESIGNED	JSG	12/20/2018	REVIEWED: DES.	CONST.
CHECKED	JRG	12/20/2018	SDOT	PROJ. MGR.
DRAWN	SO	12/20/2018	RECEIVED	
CHECKED	PLS	12/20/2018	REVISED AS BUILT	

ALL WORK SHALL BE DONE IN ACCORDANCE WITH THE CITY OF SEATTLE STANDARD PLANS AND SPECIFICATIONS AND OTHER DOCUMENTS CALLED FOR IN SECTION 0-02.3 OF THE PROJECT MANUAL.

JEFFREY S. GIBSON, STATE OF WASHINGTON, 35000, REGISTERED PROFESSIONAL ENGINEER, 12-20-18

Seattle Public Utilities
ORDINANCE NO. 125475 PW NO. 2018-064
FUND: DWS
SCALE: 3/4" = 1'-0"

PUMP STATION NO. 22 RETROFIT AND FORCE MAIN REPLACEMENT

JOB NO. PC C315071 R/W CO
VAULT PLAN NO. 776-474
SHEET 62 OF 71

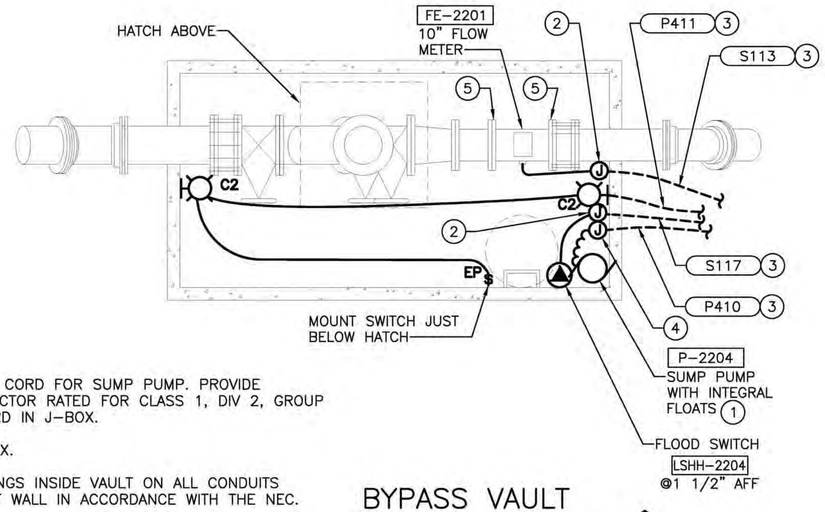

NOTES:

1. PROVIDE 20' OF POWER CORD FOR SUMP PUMP. PROVIDE UL-LISTED CORD CONNECTOR RATED FOR CLASS 1, DIV 2, GROUP D FOR TERMINATING CORD IN J-BOX.
2. PROVIDE NEMA 4X J-BOX.
3. PROVIDE SEAL OFF FITTINGS INSIDE VAULT ON ALL CONDUITS PASSING THOUGHT VAULT WALL IN ACCORDANCE WITH THE NEC.
4. PROVIDE NEMA 7 J-BOX, MOUNT NEAR HATCH AT CEILING.
5. PROVIDE GROUNDING RINGS ON EACH SIDE OF FLOW METER. JUMPER METER TO GROUND RINGS PER MANUFACTURER'S INSTRUCTIONS.

BYPASS VAULT PLAN (1 / E-5)

1/2" = 1'-0"

2 1 0 2 4
SCALE IN FEET

N

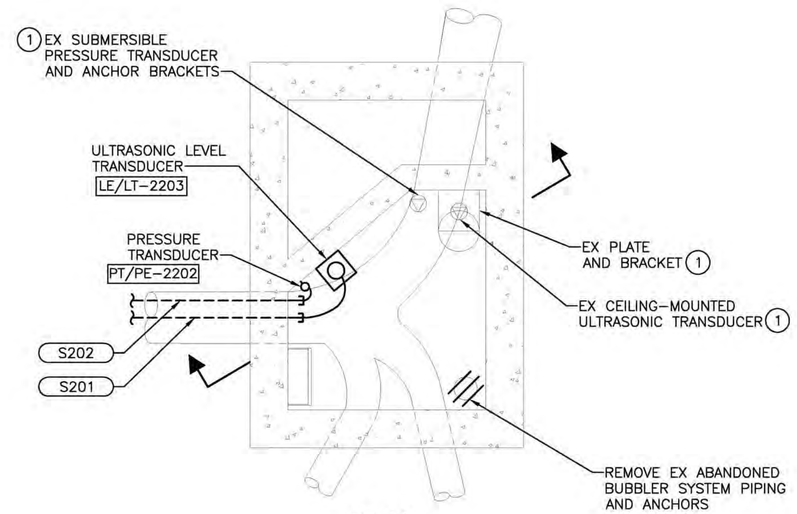

PLAN

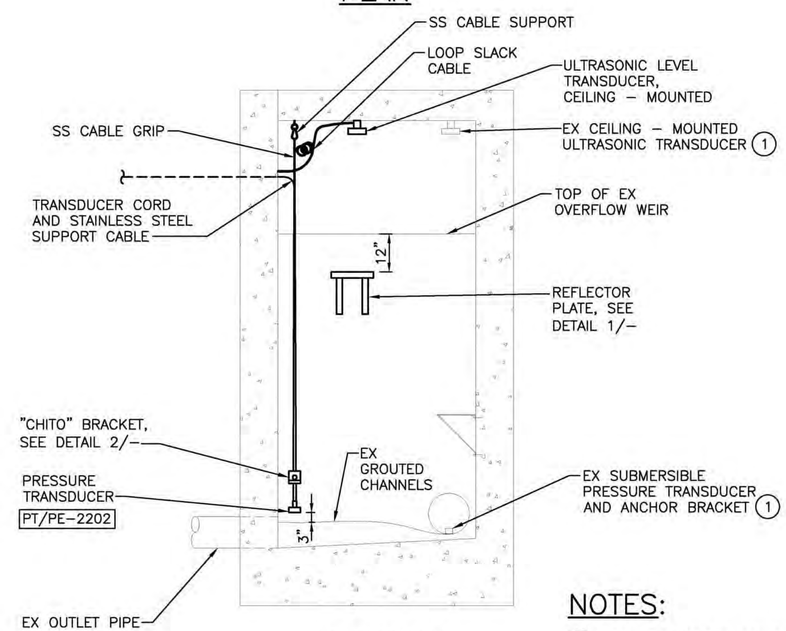

SECTION

MH010-159 (3 / E-5)

1/2" = 1'-0"

2 1 0 2 4
SCALE IN FEET

NOTES:

1. SEE KEY NOTE 1 ON C-1 FOR EX CSO MONITORING EQUIPMENT INSTRUCTIONS. PROTECT CSO MONITORING EQUIPMENT AT ALL TIMES.

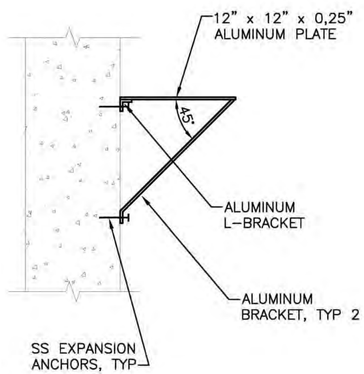

REFLECTOR PLATE DETAIL (1 / -)

1 1/2" = 1'-0"

½ ¼ 0 ½ 1
SCALE IN FEET

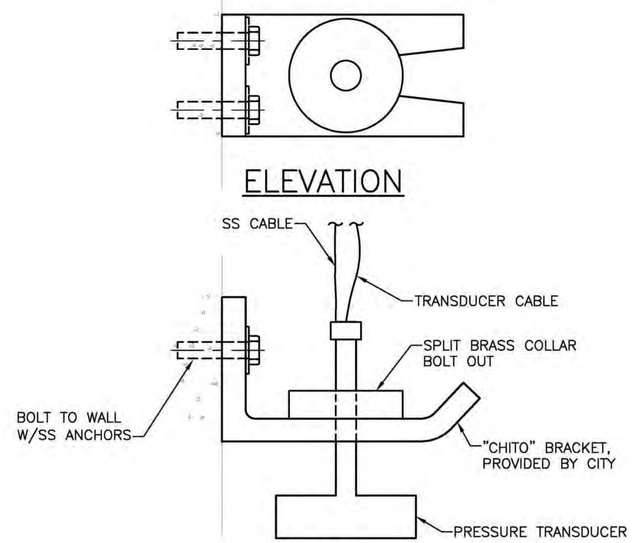

PRESSURE TRANSMITTER MOUNTING "CHITO" BRACKET DETAIL (2 / -)

NTS

ENLARGED PLAN AND DETAILS

E-14

VAULT SERIAL NO.	DATE	MARK	NATURE REVISIONS	MADE	CHK'D	REV'D

S:\Cad\Seattle Public Utilities\17-10503 Mag PS22 Retrofit Design\dwgs\E14-261-1009_Enlarged Plan and Details.dwg
psimon Dec-20-18 12:10pm

000-000-0

CDM Smith
14432 SE Eastgate Way
Suite 100
Bellevue, WA 98007
Tel: (425) 519-8300

BHC CONSULTANTS
1601 Fifth Avenue, Suite 500
Seattle, Washington 98101
Tel: 206.505.3400
www.bhcconsultants.com

REVIEWED BY SPU/WATER ENGINEERING ..... 20.....
REVIEWED BY SPU/DRAINAGE ..... 20.....
APPROVED BY SDOT STREET IMPROVEMENT PERMITTING ..... 20.....

APPROVED FOR ADVERTISING
LIZ ALZEER
DEPARTMENT OF FINANCE & ADMINISTRATIVE SERVICES
SEATTLE, WASHINGTON . . . . . 20 . .
BY: . . . . . .
CITY PURCHASING & CONTRACTING SERVICES DIRECTOR

INITIALS AND DATE		
DESIGNED	JSG	12/20/2018
CHECKED	JRG	12/20/2018
DRAWN	SO	12/20/2018
CHECKED	PLS	12/20/2018

INITIALS AND DATE	
REVIEWED:	
DES.	CONST.
SDOT	PROJ. MGR.
RECEIVED	
REVISED AS BUILT	

ALL WORK SHALL BE DONE IN ACCORDANCE WITH THE CITY OF SEATTLE STANDARD PLANS AND SPECIFICATIONS AND OTHER DOCUMENTS CALLED FOR IN SECTION 0-02.3 OF THE PROJECT MANUAL.

JEFFREY S. GIBSON, STATE OF WASHINGTON, REGISTERED PROFESSIONAL ENGINEER, 12-20-18

Seattle Public Utilities
ORDINANCE NO. 125475 PW NO. 2018-064
FUND: DWS
SCALE: N/A

PUMP STATION NO. 22 RETROFIT AND FORCE MAIN REPLACEMENT

JOB NO. PC C315071 R/W CO
VAULT PLAN NO. 776-474
SHEET 63 OF 71

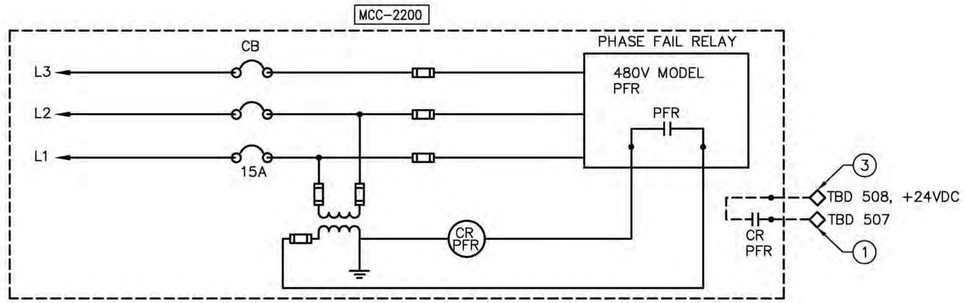

DETAIL – WIRING DIAGRAM POWER MONITOR (1 TYP)

SCALE: NONE

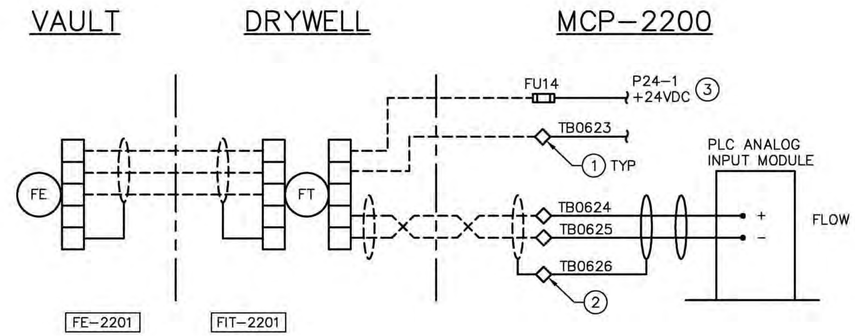

DETAIL – ANALOG LOOP DIAGRAM FLOW METER (2 TYP)

SCALE: NONE

NOTES:

1. DEVICE'S INTERNAL WIRING ARE NOT SHOWN.
2. CONTRACTOR FIELD VERIFY TERMINAL ASSIGNMENTS PER SUPPLIED MANUFACTURER AND MODEL OF THE COMPONENT PRIOR TO INSTALLATION.
3. TYPICAL COMPONENT TERMINALS CALLED.

KEYNOTES:

1. SCADA TERMINALS
2. ANALOG SHIELD TERMINALS
3. COORDINATE WITH SCADA FOR DC SUPPLY
4. COORDINATE CABLE LENGTH AND TYPES. SEE NOTES 1 AND 2/E-11.
5. PROVIDE CIRCUIT BREAKER IN PNL-2200 WITH HANDLE LOCKING MECHANISM CAPABLE OF BEING LOCKED IN THE OFF POSITION. SEE PANEL SCHEDULE FOR CIRCUIT BREAKER SIZE.
6. LOOP MOTOR LEADS THROUGH CT COILS THREE TIMES

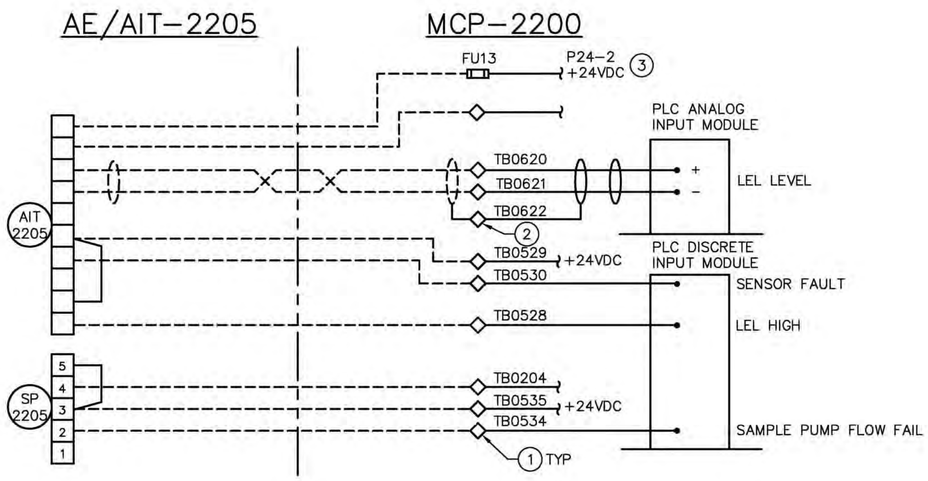

DETAIL – WIRING DIAGRAM LEL SENSOR (3 TYP)

SCALE: NONE

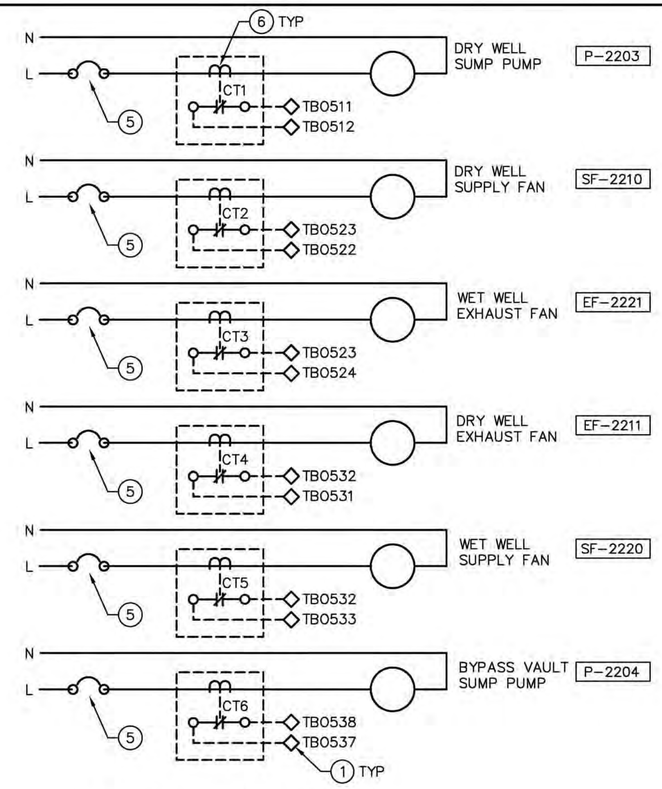

DETAIL – MOTOR CURRENT MONITORING (4 TYP)

SCALE: NONE

WIRING DIAGRAMS
E-15

NATURE REVISIONS	MADE	CHK'D	REV'D

VAULT SERIAL NO.	DATE	MARK

S:\Cad\Seattle Public Utilities\17-10503 Mag PS22 Retrofit Design\dwgs\E15-261-1009_P-Wiring Diagrams.dwg
psimon Dec-20-18 12:11pm

000-000-0

CDM Smith
14432 SE Eastgate Way
Suite 100
Bellevue, WA 98007
Tel: (425) 519-8300

BHC CONSULTANTS
1601 Fifth Avenue, Suite 500
Seattle, Washington 98101
Tel: 206.505.3400
www.bhcconsultants.com

REVIEWED BY SPU/WATER ENGINEERING ..... 20.....
REVIEWED BY SPU/DRAINAGE ..... 20.....
APPROVED BY SDOT STREET IMPROVEMENT PERMITTING ..... 20.....

APPROVED FOR ADVERTISING
LIZ ALZEER
DEPARTMENT OF FINANCE & ADMINISTRATIVE SERVICES
SEATTLE, WASHINGTON . . . . . 20 . .
BY: . . . . . .
CITY PURCHASING & CONTRACTING SERVICES DIRECTOR

INITIALS AND DATE		
DESIGNED	JSG	12/20/2018
CHECKED	JRG	12/20/2018
DRAWN	SO	12/20/2018
CHECKED	PLS	12/20/2018

INITIALS AND DATE	
REVIEWED:	
DES.	CONST.
SDOT	PROJ. MGR.
RECEIVED	
REVISED AS BUILT	

ALL WORK SHALL BE DONE IN ACCORDANCE WITH THE CITY OF SEATTLE STANDARD PLANS AND SPECIFICATIONS AND OTHER DOCUMENTS CALLED FOR IN SECTION 0-02.3 OF THE PROJECT MANUAL.

JEFFREY S. GIBSON
STATE OF WASHINGTON
REGISTERED PROFESSIONAL ENGINEER
12-20-18

Seattle Public Utilities
ORDINANCE NO. 125475 PW NO. 2018-064
FUND: DWS
SCALE: NONE

PUMP STATION NO. 22 RETROFIT AND FORCE MAIN REPLACEMENT

JOB NO. PC C315071 R/W CO
VAULT PLAN NO. 776-474
SHEET 64 OF 71

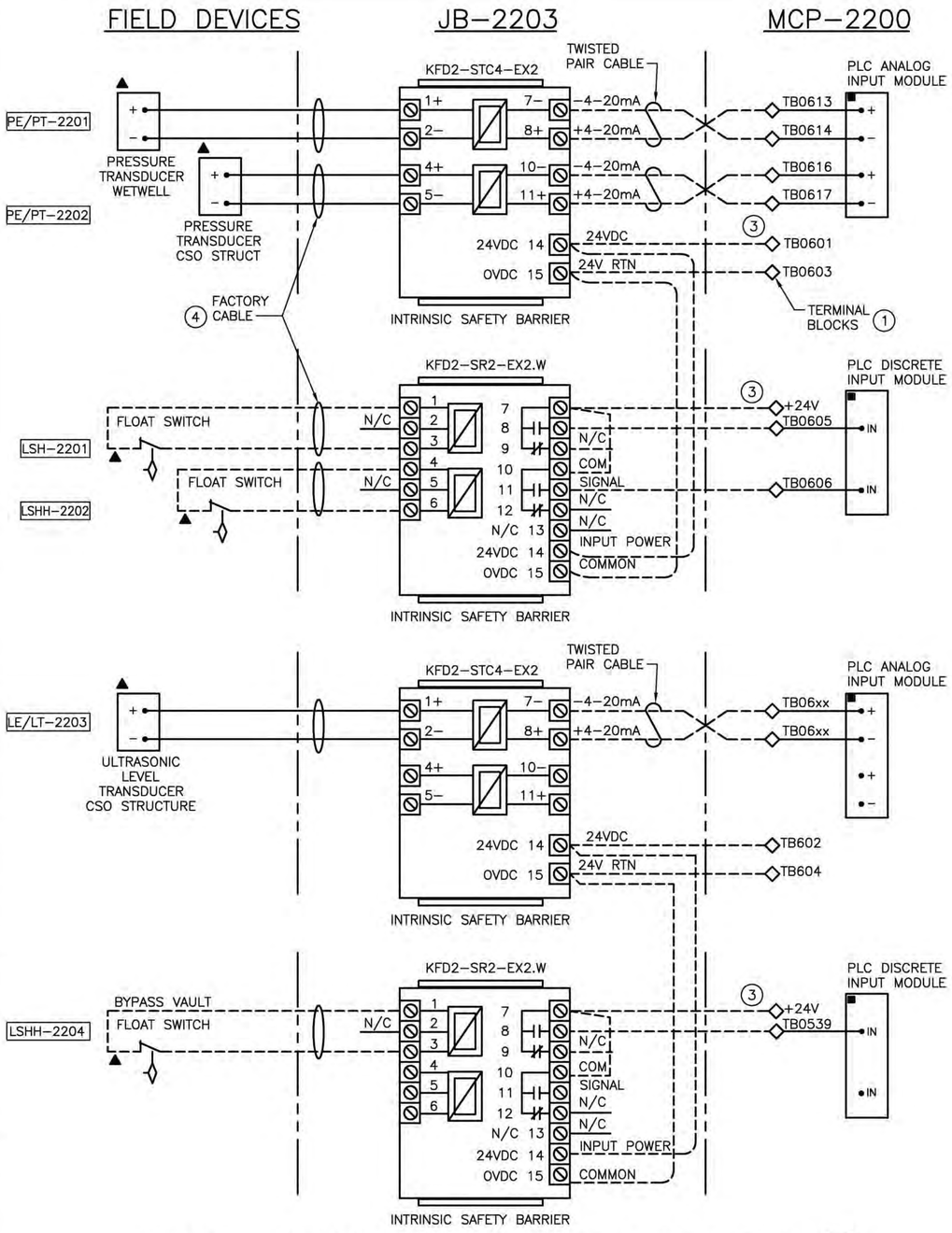

DETAIL – WIRING DIAGRAM CLASS 1 DIV 1 & 2 (1 TYP)

SCALE: NONE

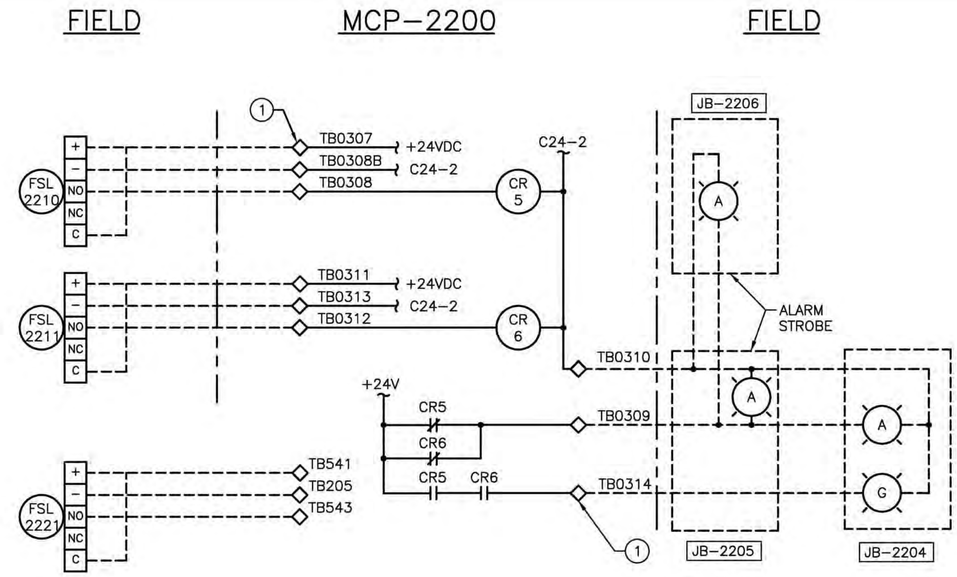

DETAIL – WIRING DIAGRAM AIR FLOW SWITCHES (2 TYP)

SCALE: NONE

NOTES:

1. DEVICE'S INTERNAL WIRING ARE NOT SHOWN.
2. CONTRACTOR FIELD VERIFY TERMINAL ASSIGNMENTS PER SUPPLIED MANUFACTURER AND MODEL OF THE COMPONENT PRIOR TO INSTALLATION.
3. TYPICAL COMPONENT TERMINALS CALLED.

KEYNOTES:

1. SCADA TERMINALS
2. ANALOG SHIELD TERMINALS
3. COORDINATE WITH SCADA FOR DC SUPPLY
4. COORDINATE CABLE LENGTH AND TYPES. SEE NOTES 1 AND 2/E–10.

WIRING DIAGRAMS
E–16

VAULT SERIAL NO.	DATE	MARK	NATURE REVISIONS	MADE	CHK'D	REV'D

S:\Cad\Seattle Public Utilities\17-10503 Mag PS22 Retrofit Design\dwgs\E16-261-1009_P-Wiring Diagrams.dwg
psimon Dec-20-18 12:11pm

000-000-0

CDM Smith
14432 SE Eastgate Way
Suite 100
Bellevue, WA 98007
Tel: (425) 519-8300

BHC CONSULTANTS
1601 Fifth Avenue, Suite 500
Seattle, Washington 98101
Tel: 206.505.3400
www.bhcconsultants.com

REVIEWED BY SPU/WATER ENGINEERING ..... 20.....
REVIEWED BY SPU/DRAINAGE ..... 20.....
APPROVED BY SDOT STREET IMPROVEMENT PERMITTING ..... 20.....

APPROVED FOR ADVERTISING
LIZ ALZEER
DEPARTMENT OF FINANCE & ADMINISTRATIVE SERVICES
SEATTLE, WASHINGTON . . . . . 20 . .
BY: . . . . . .
CITY PURCHASING & CONTRACTING SERVICES DIRECTOR

INITIALS AND DATE		
DESIGNED	JSG	12/20/2018
CHECKED	JRG	12/20/2018
DRAWN	SO	12/20/2018
CHECKED	PLS	12/20/2018

INITIALS AND DATE	
REVIEWED:	
DES.	CONST.
SDOT	PROJ. MGR.
RECEIVED	
REVISED AS BUILT	

ALL WORK SHALL BE DONE IN ACCORDANCE WITH THE CITY OF SEATTLE STANDARD PLANS AND SPECIFICATIONS AND OTHER DOCUMENTS CALLED FOR IN SECTION 0-02.3 OF THE PROJECT MANUAL.

JEFFREY S. GIBSON — STATE OF WASHINGTON — 35000 — REGISTERED PROFESSIONAL ENGINEER — 12-20-18

Seattle Public Utilities
ORDINANCE NO. 125475 PW NO. 2018-064
FUND: DWS
SCALE: NTS

PUMP STATION NO. 22 RETROFIT AND FORCE MAIN REPLACEMENT

JOB NO. PC C315071 R/W CO
VAULT PLAN NO. 776-474
SHEET 65 OF 71

NOTES:

1. VFD'S SHALL BE LOCATED IN THE MOTOR CONTROL CENTER
2. CONTRACTOR SHALL PROGRAM ALL VFD INPUTS/OUTPUTS TO PROVIDE FUNCTIONALITY SHOWN.

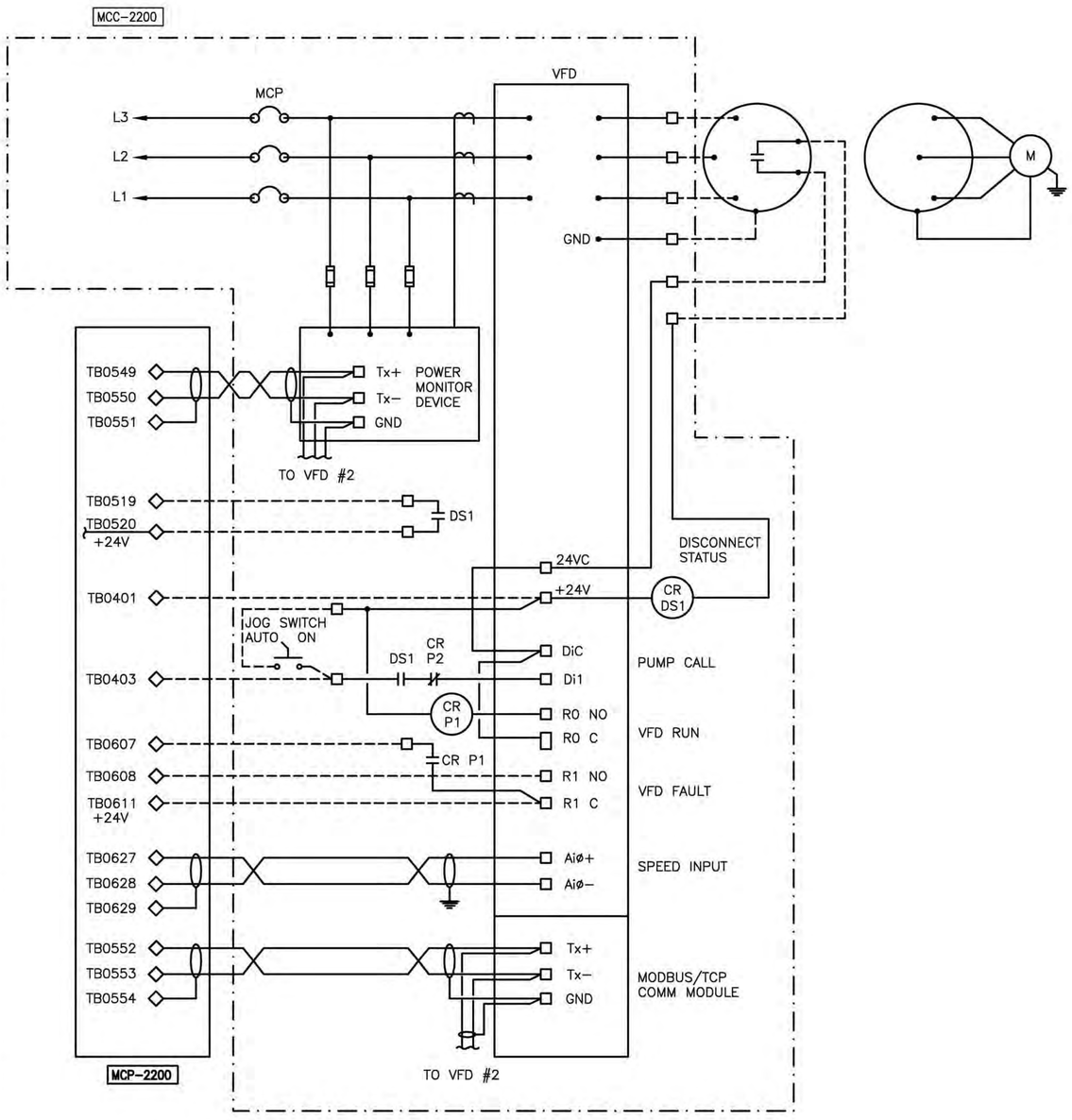

DETAIL – WIRING DIAGRAM PUMP #1 VFD (1 TYP)

SCALE: NONE

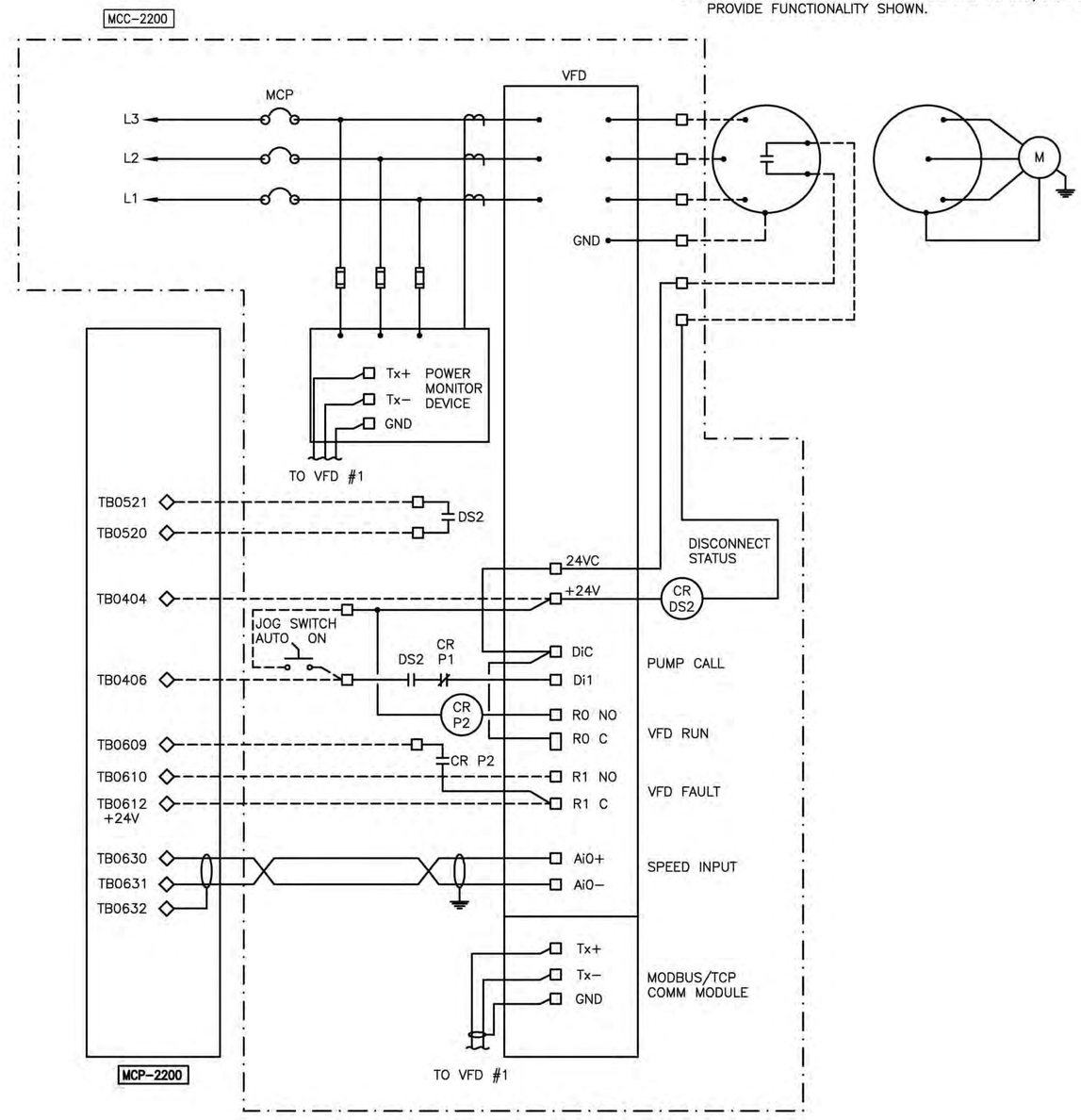

DETAIL – WIRING DIAGRAM PUMP #2 VFD (2 TYP)

SCALE: NONE

WIRING DIAGRAMS
E–17

VAULT SERIAL NO.	DATE	MARK	NATURE REVISIONS	MADE	CHK'D	REV'D

S:\Cad\Seattle Public Utilities\17-10503 Mag PS22 Retrofit Design\dwgs\E17-261-1009_P-Wiring Diagrams.dwg
psimon Dec-20-18 12:12pm

000-000-0

CDM Smith
14432 SE Eastgate Way
Suite 100
Bellevue, WA 98007
Tel: (425) 519-8300

BHC CONSULTANTS
1601 Fifth Avenue, Suite 500
Seattle, Washington 98101
Tel: 206.505.3400
www.bhcconsultants.com

REVIEWED BY SPU/WATER ENGINEERING ..... 20.....
REVIEWED BY SPU/DRAINAGE ..... 20.....
APPROVED BY SDOT STREET IMPROVEMENT PERMITTING ..... 20.....

APPROVED FOR ADVERTISING
LIZ ALZEER
DEPARTMENT OF FINANCE & ADMINISTRATIVE SERVICES
SEATTLE, WASHINGTON . . . . . 20 . .
BY: . . . . . .
CITY PURCHASING & CONTRACTING SERVICES DIRECTOR

INITIALS AND DATE		
DESIGNED	JSG	12/20/2018
CHECKED	JRG	12/20/2018
DRAWN	MTC	12/20/2018
CHECKED	PLS	12/20/2018

INITIALS AND DATE	
REVIEWED:	
DES.	CONST.
SDOT	PROJ. MGR.
RECEIVED	
REVISED AS BUILT	

ALL WORK SHALL BE DONE IN ACCORDANCE WITH THE CITY OF SEATTLE STANDARD PLANS AND SPECIFICATIONS AND OTHER DOCUMENTS CALLED FOR IN SECTION 0-02.3 OF THE PROJECT MANUAL.

JEFFREY S. GIBSON
STATE OF WASHINGTON
21002
REGISTERED PROFESSIONAL ENGINEER
12-20-18

Seattle Public Utilities
ORDINANCE NO. 125475 PW NO. 2018-064
FUND: DWS
SCALE: NONE

PUMP STATION NO. 22 RETROFIT AND FORCE MAIN REPLACEMENT

JOB NO. PC C315071 R/W CO
VAULT PLAN NO. 776-474
SHEET 66 OF 71

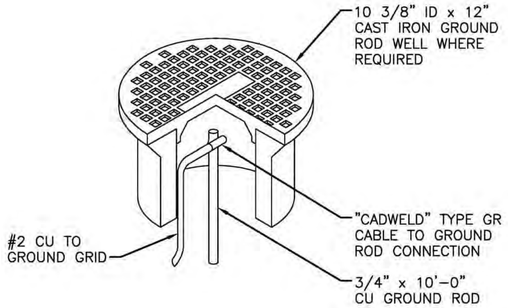

DETAIL – TYPICAL GROUND ROD AND CABLE CONNECTION (1 / TYP)

SCALE: NONE

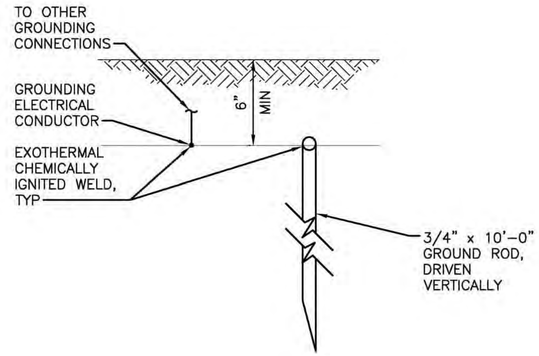

DETAIL – GROUND ROD (2 / TYP)

SCALE: NONE

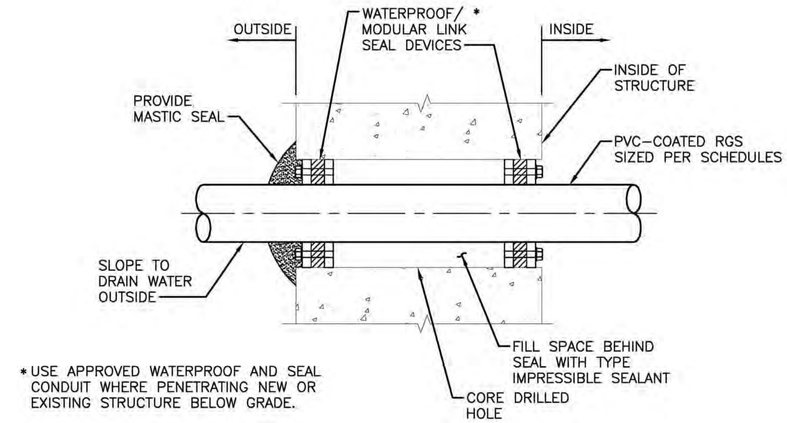

* USE APPROVED WATERPROOF AND SEAL CONDUIT WHERE PENETRATING NEW OR EXISTING STRUCTURE BELOW GRADE.

DETAIL – TYPICAL CONDUIT PENETRATION THRU U/G STRUCTURE (3 / TYP)

SCALE: NONE

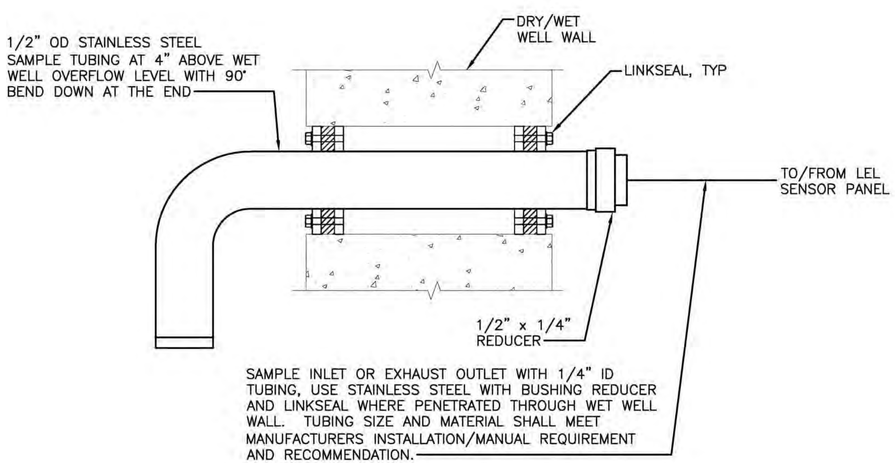

*TWO PENETRATIONS REQUIRED

DETAIL – TYPICAL LEL SAMPLE TUBE PENETRATION (4 / TYP)

SCALE: NONE

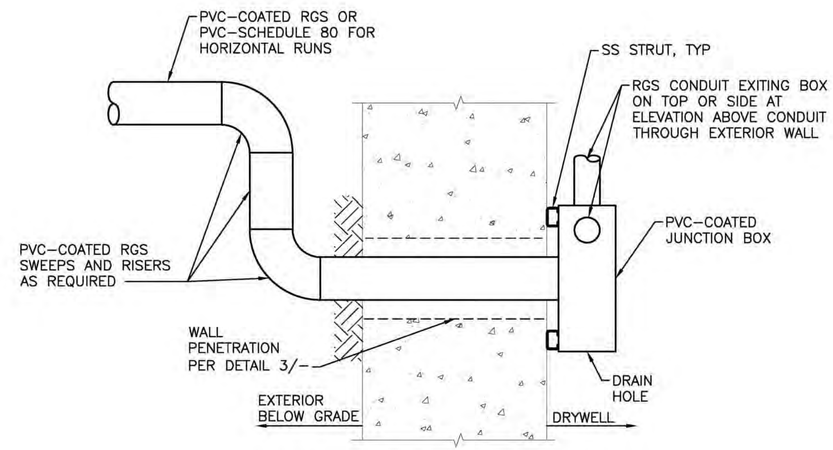

DETAIL – TYPICAL EXTERIOR TRANSITION TO DRYWELL (5 / TYP)

SCALE: NONE

ELECTRICAL DETAILS
E-18

VAULT SERIAL NO.	DATE	MARK	NATURE REVISIONS	MADE	CHK'D	REV'D

S:\Cad\Seattle Public Utilities\17-10503 Mcg PS22 Retrofit Design\dwgs\E18-261-1009_P-Electrical Details.dwg
psimon Dec-20-18 12:12pm

000-000-0

CDM Smith
14432 SE Eastgate Way
Suite 100
Bellevue, WA 98007
Tel: (425) 519-8300

BHC CONSULTANTS
1601 Fifth Avenue, Suite 500
Seattle, Washington 98101
Tel: 206.505.3400
www.bhcconsultants.com

REVIEWED BY SPU/WATER ENGINEERING ..... 20.....
REVIEWED BY SPU/DRAINAGE ..... 20.....
APPROVED BY SDOT STREET IMPROVEMENT PERMITTING ..... 20.....

APPROVED FOR ADVERTISING
LIZ ALZEER
DEPARTMENT OF FINANCE & ADMINISTRATIVE SERVICES
SEATTLE, WASHINGTON . . . . . 20 . .
BY: . . . . . .
CITY PURCHASING & CONTRACTING SERVICES DIRECTOR

INITIALS AND DATE		
DESIGNED	JSG	12/20/2018
CHECKED	JRG	12/20/2018
DRAWN	ASC	12/20/2018
CHECKED	PLS	12/20/2018

INITIALS AND DATE	
REVIEWED:	
DES.	CONST.
SDOT	PROJ. MGR.
RECEIVED	
REVISED AS BUILT	

ALL WORK SHALL BE DONE IN ACCORDANCE WITH THE CITY OF SEATTLE STANDARD PLANS AND SPECIFICATIONS AND OTHER DOCUMENTS CALLED FOR IN SECTION 0-02.3 OF THE PROJECT MANUAL.

JEFFREY S. GIBSON — STATE OF WASHINGTON — 35080 — REGISTERED PROFESSIONAL ENGINEER — 12-20-18

Seattle Public Utilities
ORDINANCE NO. 125475 PW NO. 2018-064
FUND: DWS
SCALE: NTS

PUMP STATION NO. 22 RETROFIT AND FORCE MAIN REPLACEMENT

JOB NO. PC C315071 R/W CO
VAULT PLAN NO. 776-474
SHEET 67 OF 71

EQUIPMENT LIST

TAG	DESCRIPTION	SPECIFICATION	COMMENTS
MTR–2200	UTILITY METER SOCKET	26 27 13	NEMA 3R ENCLOSURE, 400A, PER SCL REQUIREMENTS
CB–2200	MAIN CIRCUIT BREAKER	26 28 00	NEMA 4X STAINLESS STEEL ENCLOSURE, LOCKABLE HANDLE, SERVICE ENTRANCE RATED
ATS–2200	AUTOMATIC TRANSFER SWITCH	26 36 00	NEMA 4X STAINLESS STEEL ENCLOSURE
MCC–2200	MOTOR CONTROL CENTER	26 24 19	NEMA 1G ENCLOSURE
PNL–2200	PANELBOARD	26 24 16	
GEN–2200	ENGINE GENERATOR SET	26 32 13	
AHF–2200	100A ACTIVE HARMONIC FILTER	26 30 00	NEMA 1 ENCLOSURE
P–2201	SEWAGE PUMP	43 21 38	
M–2201	100 HP PUMP MOTOR	43 21 38	
DS–2201	200A MOTOR DISCONNECT	26 28 16	WITH AUX CONTACT FOR SWITCH POSITION, WALL MOUNTED J–BOX, 45 DEGREE ANGLE ADAPTOR
P–2202	SEWAGE PUMP	43 21 38	
M–2202	100 HP PUMP MOTOR	46 21 38	
DS–2202	200A MOTOR DISCONNECT	26 28 16	WITH AUX CONTACT FOR SWITCH POSITION, WALL MOUNTED J–BOX, 45 DEGREE ANGLE ADAPTOR
P–2203	SUMP PUMP – DRY WELL	43 21 43	PROVIDE WITH CORD AND PLUG, INTEGRAL FLOAT CONTROLS
P–2204	SUMP PUMP – BYPASS VAULT	43 21 43	CLASS 1, DIV. 2, HARD WIRE
SF–2210	DRY WELL SUPPLY FAN	23 80 00	
SF–2220	WET WELL SUPPLY FAN	23 80 00	
EF–2211	DRY WELL EXHAUST FAN	23 80 00	
EF–2221	WET WELL EXHAUST FAN	23 80 00	
MCP–2200	SCADA PANEL		OWNER PROVIDED, CONTRACTOR INSTALLED
JB–2202	FLOAT SWITCH J–BOX	26 05 33	NEMA 4X
JB–2203	INTRINSICALLY–SAFE RELAY ENCLOSURE		EXISTING EQUIPMENT (RELOCATE), PROVIDE NEW RELAYS
JB–2204	VENTILATION INDICATION PANEL	26 05 33	GREEN LIGHT=FAN RUN; AMBER STROBE=NO VENTILATION, NEMA 4X
JB–2205	VENTILATION WARNING STROBE	26 05 33	NEMA 4X
JB–2206	VENTILATION WARNING STROBE	26 05 33	NEMA 4X
JB–2207	PRESSURE TRANS. J–BOX	26 05 33	NEMA 4X
JB–2210	FAN SPEED CONTROLS	23 80 00	NEMA 4X
JB–2211	FAN SPEED CONTROLS	23 80 00	NEMA 4X
JB–2212	FUEL TANK CONTROLS	26 05 33	NEMA 4X
JB–2213	POWER JUNCTION BOX	26 05 33	NEMA 4X, PROVIDE TERMINAL BLOCKS
JB–2214	BATTERY ENCLOSURE	26 05 33	
AE/AIT–2205	LEL GAS MONITOR	40 91 10	
LSH–2201	WET WELL FLOAT SWITCH HIGH	40 91 10	
LSHH–2202	WET WELL FLOAT SWITCH HIGH HIGH	40 91 10	
PE/PT–2201	PRESSURE TRANSDUCER – WET WELL	40 91 10	
PE/PT–2202	PRESSURE TRANSDUCER – OVERFLOW	40 91 10	
LE/LT–2203	ULTRASONIC LEVEL TRANSDUCER	40 91 10	
FE/FIT–2201	MAGNETIC FLOW METER	40 91 16	REMOTE TRANSMITTER, NEMA 4X ENCLOSURE
LSHH–2203	DRY WELL FLOOD SWITCH	40 91 10	
LSHH–2204	BYPASS VAULT FLOOD SWITCH	40 91 10	
TNK–2200	DIESEL FUEL TANK	23 11 13	
JB–2215	TANK ALARM J–BOX	26 05 33	NEMA 3R
HS–2203	JOG SWITCH	26 05 33	NEMA 4
HS–2204	JOG SWITCH	26 05 33	NEMA 4
FSL–2210	AIR FLOW SWITCH	40 91 10	
FSL–2211	AIR FLOW SWITCH	40 91 10	
XFMR–2200	DRY–TYPE TRANSFORMER	26 22 00	

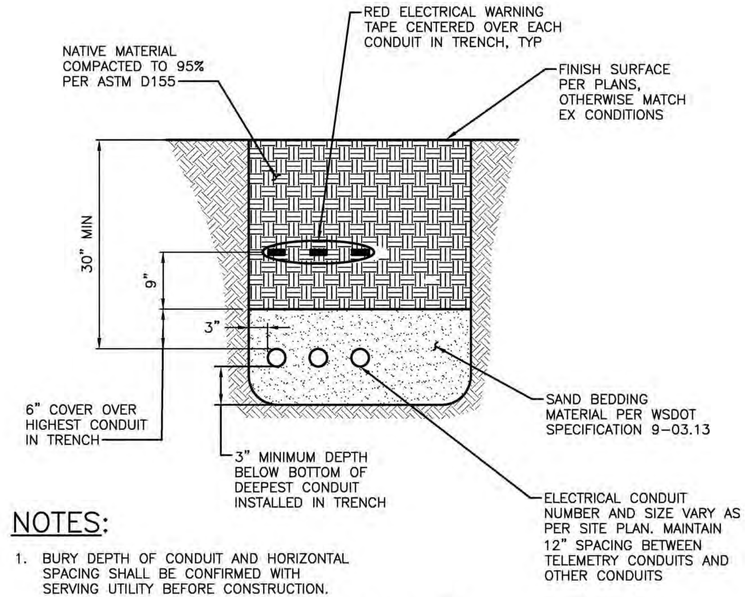

NOTES:

1. BURY DEPTH OF CONDUIT AND HORIZONTAL SPACING SHALL BE CONFIRMED WITH SERVING UTILITY BEFORE CONSTRUCTION.

ELECTRICAL TRENCH DETAIL 1 TYP

EQUIPMENT LIST
E–19

VAULT SERIAL NO.	DATE	MARK	NATURE REVISIONS	MADE	CHK'D	REV'D

S:\Cad\Seattle Public Utilities\17–10503 Mog PS22 Retrofit Design\dwgs\E19–261–1009_Equipment List.dwg
psimon Dec–20–18 12:13pm

000 – 000 – 0

CDM Smith
14432 SE Eastgate Way
Suite 100
Bellevue, WA 98007
Tel: (425) 519-8300

BHC CONSULTANTS
1601 Fifth Avenue, Suite 500
Seattle, Washington 98101
Tel: 206.505.3400
www.bhcconsultants.com

REVIEWED BY SPU/WATER ENGINEERING ..... 20.....
REVIEWED BY SPU/DRAINAGE ..... 20.....
APPROVED BY SDOT STREET IMPROVEMENT PERMITTING ..... 20.....

APPROVED FOR ADVERTISING
LIZ ALZEER
DEPARTMENT OF FINANCE & ADMINISTRATIVE SERVICES
SEATTLE, WASHINGTON . . . . . 20 . .
BY: . . . . . .
CITY PURCHASING & CONTRACTING SERVICES DIRECTOR

INITIALS AND DATE		
DESIGNED	JSG	12/20/2018
CHECKED	JRG	12/20/2018
DRAWN	SO	12/20/2018
CHECKED	PLS	12/20/2018

INITIALS AND DATE	
REVIEWED:	
DES.	CONST.
SDOT	PROJ. MGR.
RECEIVED	
REVISED AS BUILT	

ALL WORK SHALL BE DONE IN ACCORDANCE WITH THE CITY OF SEATTLE STANDARD PLANS AND SPECIFICATIONS AND OTHER DOCUMENTS CALLED FOR IN SECTION 0–02.3 OF THE PROJECT MANUAL.

JEFFREY S. GIBSON
STATE OF WASHINGTON
35080
REGISTERED PROFESSIONAL ENGINEER
12-20-18

Seattle Public Utilities
ORDINANCE NO. 125475 PW NO. 2018–064
FUND: DWS
SCALE: N/A

PUMP STATION NO. 22 RETROFIT AND FORCE MAIN REPLACEMENT

JOB NO. PC C315071 R/W CO
VAULT PLAN NO. 776–474
SHEET 68 OF 71

FACILITY OPERATION

SET POINTS	ELEVATION	WET WELL DEPTH ABOVE SUMP	TAG
OVERFLOW ALARM	13.53*	14.7	LSHH–2202
HIGH LEVEL ALARM	10.5*	11.7	LSH–2201
VARIABLE SPEED PUMP	8.1–10.0	9.3–11.2	PE/PIT 2201
LEAD PUMP ON	8.0	9.2	PE/PIT 2201
ALL PUMP STOP	3.0	4.2	PE/PIT 2201
LOW LEVEL ALARM	1.0	2.2	PE/PIT 2201

* ELEVATIONS SHOWN FOR LSH AND LSHH ARE FLOAT SWITCH TRIP POINTS ON RISING LEVEL.

NOTES:

1. COORDINATE WITH SCADA ENGINEER FOR NEW SCADA PANEL AND TERMINATION OF FIELD DEVICE WIRING AT SCADA. REMOVE EXISTING SCADA AND DELIVER TO OWNER WAREHOUSE.
2. FIELD VERIFY MOUNTING LOCATIONS OF DEVICES WITH SCADA ENGINEER. MOUNTING LEL SENSOR AT LOCATION FOR EASY MAINTENANCE ACCESS.
3. INSTALL GAS DETECTOR PER MANUFACTURER'S RECOMMENDATIONS DUE TO STABILITY AND ACCURACY OF MEASUREMENTS.
4. RELOCATE EXISTING INTRINSICALLY SAFE BARRIER JUNCTION BOX, JB–2203.
5. PENETRATE 3/4" STAINLESS STEEL TUBING THROUGH WET WELL WALL WITH LINKSEAL DEVICES ABOVE OVERFLOW ELEVATION PER NEC ARTICLES 500 FOR LEL SENSOR/SUPPLY AND EXHAUST LINES.
6. EXTERIOR EXISTING PHONELINE CONDUIT UNCHANGED. REMOUNT EXISTING NIU AT A LOCATION WHERE EXISTING CABLE LENGTH ALLOW. INSTALL 3/4" CONDUIT TO SCADA PANEL FOR NETWORK CABLES.

I&C LEGENDS & SYMBOLS:

AF	ANALYTICAL ELEMENT
AIT	ANALYTICAL INDICATING TRANSMITTER
ASH	ANALYTICAL HI LEVEL
ASF	ANALYTICAL FAULT
FE	FLOW ELEMENT
FIT	FLOW INDICATING TRANSMITTER
FS	FLOW SWITCH
FSL	FLOW SWITCH LOW
HC	HAND CONTROL
HS	HAND SWITCH
IS	CURRENT SWITCH
JB	JUNCTION BOX
JI	POWER INDICATOR
LE	LEVEL ELEMENT
LSHH	LEVEL SWITCH HI HI
LSH	LEVEL SWITCH HIGH
LSL	LEVEL SWITCH LOW
LT	LEVEL TRANSMITTER
NIU	NETWORK INTERFACE UNIT
PE	PRESSURE ELEMENT
PT	PRESSURE TRANSMITTER
PFR	PHASE FAIL RELAY
QA	INDICATOR ALARM
QL	INDICATOR LIGHTING
QS	INDICATOR STATUS
RS	RESET
SLK	SEAL LEAK
MS	MOTOR STARTER
VFD	VARIABLE FREQUENCY DRIVE
ZS	POSITION SWITCH

POWER

DIGITAL SIGNAL

ANALOG SIGNAL

NETWORK COMMUNICATION

EQUIPMENT

CHECK VALVE

ISOLATION VALVE

AIR RELEASE / VACUUM VALVE

SUBMERSIBLE PUMP

CENTRIFUGAL PUMP

FLOAT SWITCH

M — MOTOR

XX / XXXX — DISCRETE FIELD OR LOCALLY MOUNTED INSTRUMENTS

XX XXXX / XX XXXX — FIELD INSTRUMENTS SHARING COMMON HOUSING

XX / XXXX — INSTRUMENT CONTROL/TRANSMITTER/DISPLAY (INACCESSIBLE TO OPERATOR)

XX / XXXX — INSTRUMENT CONTROL/TRANSMITTER/DISPLAY (ACCESSIBLE TO OPERATOR)

XX / XXXX — FACE MOUNTED ON/IN FIELD PANEL (ACCESSIBLE TO OPERATOR)

Jeffrey S Gibson

Digitally signed by Jeffrey S Gibson
DN: cn=Jeffrey S Gibson, o=BHC Consultants, LLC, ou, email=jeff.gibson@bhcconsultants.com, c=US
Date: 2018.12.20 13:04:06 -08'00'

P&ID, GENERAL, SYMBOLS, ABBREVIATIONS, NOTES

I–1

VAULT SERIAL NO.	DATE	MARK	NATURE REVISIONS	MADE	CHK'D	REV'D

S:\Cad\Seattle Public Utilities\17-10503 Mag PS22 Retrofit Design\dwgs\11-261-1009_P&ID, General.dwg
psimon Dec-20-18 12:15pm

000 — 000 — 0

CDM Smith
14432 SE Eastgate Way
Suite 100
Bellevue, WA 98007
Tel: (425) 519-8300

BHC CONSULTANTS
1601 Fifth Avenue, Suite 500
Seattle, Washington 98101
Tel: 206.505.3400
www.bhcconsultants.com

REVIEWED BY SPU/WATER ENGINEERING ..... 20.....
REVIEWED BY SPU/DRAINAGE ..... 20.....
APPROVED BY SDOT STREET IMPROVEMENT PERMITTING ..... 20.....

APPROVED FOR ADVERTISING
LIZ ALZEER
DEPARTMENT OF FINANCE & ADMINISTRATIVE SERVICES
SEATLE, WASHINGTON . . . . . 20 . .
BY: . . . . . .
CITY PURCHASING & CONTRACTING SERVICES DIRECTOR

INITIALS AND DATE		
DESIGNED	JSG	12/20/2018
CHECKED	JRG	12/20/2018
DRAWN	GOC	12/20/2018
CHECKED	PLS	12/20/2018

INITIALS AND DATE	
REVIEWED:	
DES.	CONST.
SDOT	PROJ. MGR.
RECEIVED	
REVISED AS BUILT	

ALL WORK SHALL BE DONE IN ACCORDANCE WITH THE CITY OF SEATTLE STANDARD PLANS AND SPECIFICATIONS AND OTHER DOCUMENTS CALLED FOR IN SECTION 0-02.3 OF THE PROJECT MANUAL.

JEFFREY S. GIBSON — STATE OF WASHINGTON — 53080 — REGISTERED PROFESSIONAL ENGINEER — 12-20-18

Seattle Public Utilities

ORDINANCE NO. 125475 PW NO. 2018–064
FUND: DWS
SCALE: NONE

PUMP STATION NO. 22 RETROFIT AND FORCE MAIN REPLACEMENT

JOB NO. PC C315071 R/W CO
VAULT PLAN NO. 776–474
SHEET 69 OF 71

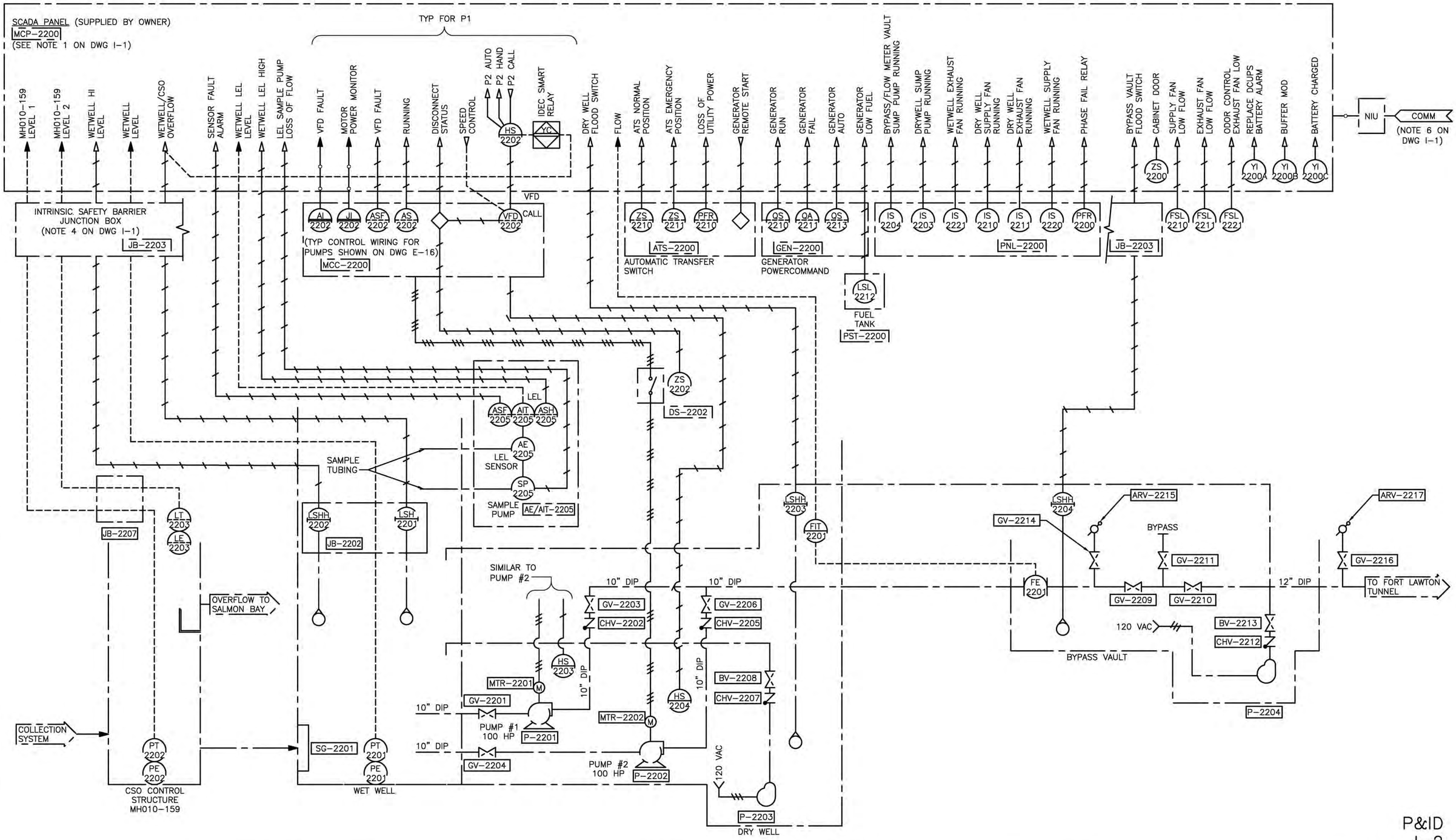

P&ID
I-2

VAULT SERIAL NO.	DATE	MARK	NATURE REVISIONS	MADE	CHK'D	REV'D

S:\Cad\Seattle Public Utilities\17-10503 Mag PS22 Retrofit Design\dwgs\V2-261-1009_P&ID.dwg
psimon Dec-20-18 12:18pm

CDM Smith
14432 SE Eastgate Way
Suite 100
Bellevue, WA 98007
Tel: (425) 519-8300

BHC CONSULTANTS
1601 Fifth Avenue, Suite 500
Seattle, Washington 98101
Tel: 206.505.3400
www.bhcconsultants.com

REVIEWED BY SPU/WATER ENGINEERING ..... 20.....
REVIEWED BY SPU/DRAINAGE ..... 20.....
APPROVED BY SDOT STREET IMPROVEMENT PERMITTING ..... 20.....

APPROVED FOR ADVERTISING
LIZ ALZEER
DEPARTMENT OF FINANCE & ADMINISTRATIVE SERVICES
SEATTLE, WASHINGTON . . . . . 20 . .
BY: . . . . . .
CITY PURCHASING & CONTRACTING SERVICES DIRECTOR

INITIALS AND DATE		INITIALS AND DATE	
DESIGNED JSG	12/20/2018	REVIEWED: DES.	CONST.
CHECKED JRG	12/20/2018	SDOT	PROJ. MGR.
DRAWN GOC	12/20/2018	RECEIVED	
CHECKED PLS	12/20/2018	REVISED AS BUILT	

ALL WORK SHALL BE DONE IN ACCORDANCE WITH THE CITY OF SEATTLE STANDARD PLANS AND SPECIFICATIONS AND OTHER DOCUMENTS CALLED FOR IN SECTION 0-02.3 OF THE PROJECT MANUAL.

JEFFREY S. GIBSON
STATE OF WASHINGTON
43080
REGISTERED PROFESSIONAL ENGINEER
12-20-18

Seattle Public Utilities
ORDINANCE NO. 125475 PW NO. 2018-064
FUND: DWS
SCALE: NONE

PUMP STATION NO. 22 RETROFIT AND FORCE MAIN REPLACEMENT

JOB NO. PC C315071 R/W CO
VAULT PLAN NO. 776-474
SHEET 70 OF 71

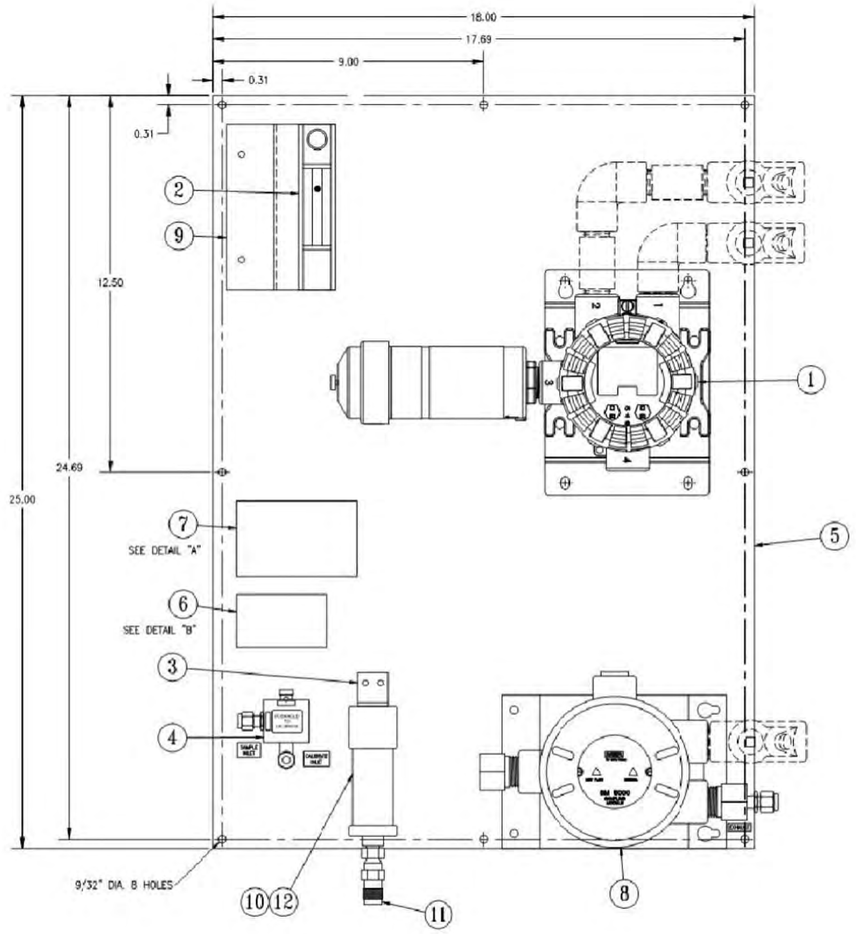

PARTS LIST			
ITEM NO.	MAFL MASTER NO. DOCUMENT NO.	REQ'D	DESCRIPTION
1	A-X5000-0-F-0-1-0-AA-00-C	1	GAS MONITOR
2	468232	1	FLOW METER
3	CP30540319	1	BRACKET, FILTER
4	10040254	1	VALVE, PUSHBUTTON, MOMENTARY
5	10186064	1	PANEL, ALUMINUM, POWDER COAT BLACK
6	10176455	1	LABEL, CUSTOM PRODUCTS
7	CP30541330	1	LABEL, WARNING
8	10043264	1	PUMP ASSEMBLY
9	CP30541430	1	BRACKET, FLOWMETER
10	CP30540574	1	FILTER, COALESCER
11	10190541	1	VALVE, DRAIN
12	CP30540575	1	FILTER, ELEMENT

C = SENSOR FLOW CAP ASSEMBLIES

REVISIONS	
1 7-20-18 REVISED ITEM 1 ON PARTS LIST.	F.N.M. B.C.M.

PRELIMINARY DRAWING

DRAWING APPROVAL IS REQUIRED

FABRICATION OF THIS SYSTEM WILL NOT START UNTIL THESE DRAWINGS ARE RETURNED APPROVED, SIGNED AND DATED.

SIGNED:_____ DATE:_____

THIS IS A PREPRODUCTION DRAWING TO BE USED DURING BID STAGE FOR COMMUNICATION OF THE SYSTEM DESIGN. AS BUILT DRAWING WILL BE SUPPLIED AT TIME OF SHIPMENT TO REFLECT ANY PRODUCTION MODIFICATIONS REQUIRED TO SUIT THE BUILDING PROCESS OR SHOP CAPABILITIES

NOTES:
1. REFERENCE INSTRUCTION MANUAL(S): ULTIMA X5000 GAS MONITOR (P/N 10177361), SAMPLING MODULE ASSY:DC, XP, SM5000 (P/N 10103804).
2. SAMPLE TUBING, 1/4" O.D., 3/16" I.D., MAXIMUM SAMPLE LENGTH 100 FT. EXHAUST ONLY IN A SAFE MANNER USING 3/8" O.D., 5/16" I.D., TUBING. DO NOT RESTRICT THE EXHAUST TUBING. MAXIMUM EXHAUST LENGTH 20 FT.
3. CONDUIT SEALERS CUSTOMER SEALED UNLESS OTHERWISE NOTED.
4. ASSEMBLY RATING: NEMA 4, IP66. DESIGNED TO BE INSTALLED IN A NEC DEFINED CLASS I, DIVISION 1, GROUPS A-D, T4 CLASSIFIED LOCATION.
5. DIMENSIONS IN INCHES (FOR REFERENCE ONLY).
6. APPROXIMATE WEIGHT 30 LBS (13 KG).
7. MOUNT THE ENCLOSURE WITH THE FRONT PANEL DISPLAY AT OR SLIGHTLY ABOVE EYE LEVEL. VIEW OF DISPLAY MUST REMAIN UNOBSTRUCTED. DISPLAY PROVIDES SYSTEM ACCESS VIA WIRELESS COMMUNICATOR/CONTROLLER AND DISPLAYS SYSTEM PARAMETERS.
8. AMBIENT TEMPERATURE RANGE: -4 TP 122°F, SUITABLE FOR OUTDOOR USE WITH NO SOLAR HEAT LOAD. INSTALL IN COMPLETE SHADE ONLY. BOTH AMBIENT AND GAS SAMPLE TEMPERATURES ARE TO BE THE SAME. IF MOISTURE IN SAMPLE, KEEP ABOVE FREEZING TEMPERATURES.
9. SAMPLE HUMIDITY RANGE: 15 TO 95% NON-CONDENSING.
10. ------ INDICATES FIELD CONNECTIONS BY OTHERS.
11. SUPPLY POWER REQUIREMENT: 24 VDC, 20 WATTS MAX.
12. ALL SAMPLE WETTABLE FLOW COMPONENTS TO BE CONSTRUCTED OF STAINLESS STEEL, PTFE, VITON, ALUMINUM, BUNA-N, GLASS, SAPPHIRE, POLYURETHANE, NYLON, POLYPROPYLENE, AND NEOPRENE.

OPERATION NOTES (DC PUMPED SYSTEM):
1. KEEP SAMPLE PRESSURE BETWEEN +0.5 TO -8.5.
2. ADJUST THE FLOWMETER UTILITY VALVE FOR A FLOW INDICATION OF APPROXIMATELY 3 SCFH. SAMPLE MODULE FLOW SWITCH TRIP POINT APPROXIMATELY 1SCFH.
3. OPEN DRAIN ON FILTER TO EMPTY ANY WATER BUILD-UP IN THE FILTER. CLOSE DRAIN COMPLETELY BEFORE SAMPLING OR CALIBRATING.
4. CALIBRATE SENSOR BY INTRODUCTION OF APPROPRIATE GAS TO THE "CALIBRATE" INLET FITTING THROUGH A DEMAND REGULATOR (MSA P/N 710288 OR EQUIV.). FOLLOW CALIBRATION PROCEDURE AS OUTLINED IN ULTIMA X5000 GAS SERIES MONITORS INSTRUCTION MANUAL/CALIBRATION SECTION.

⚠ WARNING
- Substitution of components may impair suitability for hazardous locations.
- Explosion hazard – do not disconnect equipment unless power has been switched off or the area is know to be non-hazardous.
- Read and follow all manuals, instructions, warnings, and cautions pertaining to this gas monitor.

Failure to follow this warning can cause ignition of explosive environments resulting in death or serious injury.

If you have questions, contact your local manufacturer's representative or MSA at 1-800-MSA-INST or www.msasafety.com

DETAIL "A"

MSA The Safety Company
PRODUCT OF U.S.
ASSEMBLED BY MSA CUSTOM PRODUCTS
MSAsafety.com

DETAIL "B"

COLOR CODE			
BLACK	= K	GREEN	= G
BROWN	= N	BLUE	= B
RED	= R	VIOLET	= V
ORANGE	= O	GRAY	= A
YELLOW	= Y	WHITE	= W
PINK	= P	TAN	= T

AUTHORIZED COUNTRY

MSA — MINE SAFETY APPLIANCES CO. PITTSBURGH, PA 15230, USA
MSA STANDARD SHOP PRACTICES APPLY

THIS DRAWING IS THE PROPERTY OF MSA AND IS MADE AVAILABLE TO YOU IN CONFIDENCE AND SUBJECT TO THE FOLLOWING: NO PERMISSION IS GRANTED TO PUBLISH, USE, REPRODUCE, TRANSMIT OR DISCLOSE THIS DRAWING, OR ANY INFORMATION CONTAINED THEREIN TO OTHERS WITHOUT THE PRIOR WRITTEN CONSENT OF MSA EXCEPT FOR THE MANUFACTURE OF ARTICLES FOR MSA SOUTZKEMARK NACO DIN 34 BOCHTEN, MSA ALTER GmbH.

DO NOT SCALE DWG.

CODE SYMBOLS: CRITICAL ⚠; MAJOR A ⚠; MAJOR B ⚠; MINOR (NO MARK); 100 % INSPECTION ⚠

TOLERANCES UNLESS OTHERWISE SPECIFIED: FRACTIONAL ± 1/64; 2 PL DEC. ± 0.01; 3 PL DEC. ± 0.005; ANGULAR ±1 deg. SEE MSA STANDARD SHOP PRACTICES FOR DRILLED HOLE TOLERANCES

JOB NO. RFQ13229 | APPROVAL AGENCY CODE: NO | NIOSH ATTR. DOC.:
DRAWN BY F.N.M. DATE 7-13-18
CHECKED BY
PROJ. ENGR. B.C.M. 7-20-18
QUALITY ASSURANCE
MANUFACTURING

PANEL, FLOW, X5000, DC PUMPED, SINGLE SENSOR

CADD REF: 3054-1856-R01-P01 | SCALE: NTS

DOCUMENT NO. DSK 3054-1856 | SHEET 1 OF 2

NOTES:
1. CONTACT CPU SCADA ELECTRICAL ENGINEER TO OBTAIN A SIGNED MSA DRAWING FOR CONTRACTOR ORDERING. SEE SPECIFICATION SECTION 40 91 00 FOR MORE ORDERING INFORMATION.

AE/AIT 2205 GAS DETECTOR PANEL
1-3

VAULT SERIAL NO.	DATE	MARK	NATURE REVISIONS	MADE	CHK'D	REV'D

000-000-0

S:\Cad\Seattle Public Utilities\17-10503 Mag PS22 Retrofit Design\dwgs\05-261-1009_Gas Detector Panel.dwg
psimon Dec-20-18 12:17pm

CDM Smith
14432 SE Eastgate Way
Suite 100
Bellevue, WA 98007
Tel: (425) 519-8300

BHC CONSULTANTS
1601 Fifth Avenue, Suite 500
Seattle, Washington 98101
Tel: 206.505.3400
www.bhcconsultants.com

REVIEWED BY SPU/WATER ENGINEERING ..... 20.....
REVIEWED BY SPU/DRAINAGE ..... 20.....
APPROVED BY SDOT STREET IMPROVEMENT PERMITTING ..... 20.....

APPROVED FOR ADVERTISING
LIZ ALZEER
DEPARTMENT OF FINANCE & ADMINISTRATIVE SERVICES
SEATTLE, WASHINGTON . . . . . 20 . . .
BY: . . . . . .
CITY PURCHASING & CONTRACTING SERVICES DIRECTOR

INITIALS AND DATE		
DESIGNED	JSG	12/20/2018
CHECKED	JRG	12/20/2018
DRAWN	GOC	12/20/2018
CHECKED	PLS	12/20/2018

INITIALS AND DATE	
REVIEWED:	
DES.	CONST.
SDOT	PROJ. MGR.
RECEIVED	
REVISED AS BUILT	

ALL WORK SHALL BE DONE IN ACCORDANCE WITH THE CITY OF SEATTLE STANDARD PLANS AND SPECIFICATIONS AND OTHER DOCUMENTS CALLED FOR IN SECTION 0-02.3 OF THE PROJECT MANUAL.

JEFFREY S. GIBSON — STATE OF WASHINGTON — 35880 — REGISTERED PROFESSIONAL ENGINEER — 12-20-18

Seattle Public Utilities
ORDINANCE NO. 125475 PW NO. 2018-064
FUND: DWS
SCALE: NONE

PUMP STATION NO. 22 RETROFIT AND FORCE MAIN REPLACEMENT

JOB NO. PC C315071 R/W CO
VAULT PLAN NO. 776-474
SHEET 71 OF 71