SAMPLE WATER MAIN CSEC PLAN

CURB AND GUTTER ROADWAY, NO GROUNDWATER

CONSTRUCTION STORMWATER AND EROSION CONTROL (CSEC) NOTES

UNLESS OTHERWISE NOTED:

THE CONSTRUCTION CONTRACTOR SHALL USE ALL REASONABLE MEASURES TO MINIMIZE THE IMPACTS OF CONSTRUCTION ACTIVITY ON THE DRAINAGE SYSTEM AND RECEIVING WATERS. WATER QUALITY CONSTITUENTS OF PARTICULAR CONCERN ARE TURBIDITY, SUSPENDED SEDIMENTS, SETTLEABLE SOLIDS, OIL AND GREASE, AND pH. REQUIRED CSEC MEASURES INCLUDE, BUT ARE NOT LIMITED TO, THE FOLLOWING:

1. THE BOUNDARIES OF THE PROJECT LIMITS ARE THE NORTHERN CURB OF HOLGATE ST AND THE ROADWAY CENTERLINE, AND THE WEST CURB OF AIRPORT WAY AND THE EAST CURB OF 8TH AVE. CLEARING LIMITS WILL BE DETERMINED BY THE LOCATIONS OF EXISTING PAVEMENT EDGES, DURING THE CONSTRUCTION PERIOD, NO DISTURBANCE BEYOND THE CLEARING LIMITS WILL BE PERMITTED. THE CLEARING LIMITS WILL BE MAINTAINED BY THE CONTRACTOR FOR THE DURATION OF CONSTRUCTION.

2. THE CSEC MEASURES SHOWN ON THIS PLAN ARE THE MINIMUM BMPS FOR ANTICIPATED SITE CONDITIONS. DURING THE CONSTRUCTION PERIOD, THESE CSEC FACILITIES SHALL BE UPGRADED (E.G. ADDITIONAL CATCH BASIN FILTERS, OR ADDITIONAL STORMWATER TREATMENT MEASURES) AS NEEDED, DUE TO WEATHER OR FIELD CONDITIONS, IN ORDER TO PREVENT SEDIMENT FROM ENTERING THE DRAINAGE SYSTEM OR OFF-SITE AREAS.

3. THE CONTRACTOR SHALL USE PROPER EROSION AND SEDIMENT CONTROL PRACTICES ON THE CONSTRUCTION SITE AND ANY ADJACENT CONSTRUCTION STAGING AREAS TO PREVENT EROSION IN AND DOWNHILL OF DISTURBED AREAS, AND TO PREVENT THE DISCHARGE OF UPLAND SEDIMENTS OR SEDIMENT-LADEN WATER INTO WETLANDS, WATER BODIES, AND LOCAL DRAINAGE SYSTEMS.

4. THE CSEC FACILITIES SHOWN ON THIS PLAN WILL BE CONSTRUCTED PRIOR TO SITE DISTURBANCE SO AS TO ENSURE THAT THE TRANSPORT OF SEDIMENT TO SURFACE WATERS, DRAINAGE SYSTEMS, AND ADJACENT PROPERTIES IS MINIMIZED.

5. THE CONTRACTOR SHALL USE BMPS (E.G. DIVERSION DITCHES, BERMS) AS APPLICABLE TO MINIMIZE OFF-SITE RUNOFF AND CLEAN STORMWATER FROM ENTERING THE DISTURBED AREA.

6. THE CONTRACTOR SHALL NOT DISCHARGE TURBID WATER GENERATED FROM CONSTRUCTION ACTIVITIES, DIRECTLY TO ANY STREAMS, STORM WATER SYSTEM INLETS, OR DRAINAGE DITCHES.

7. SOIL STOCKPILES MUST BE STABILIZED FROM EROSION, PROTECTED WITH SEDIMENT TRAPPING MEASURES, AND LOCATED AWAY FROM STORM DRAIN INLETS.

8. THE CONTRACTOR SHALL EMPLOY DUST CONTROL MEASURES AS NEEDED TO PREVENT SURFACE AND AIR MOVEMENT OF DUST FROM EXPOSED SOIL SURFACES.

9. CATCH BASIN PROTECTION SHALL BE INSTALLED IN ANY GRATED ROAD DRAINAGE STRUCTURES, EXISTING OR NEWLY INSTALLED, WHICH ARE LIKELY TO RECEIVE RUNOFF FROM THE DISTURBED AREAS DURING CONSTRUCTION. CATCH BASIN PROTECTION SHOWN ON THE CSEC PLANS ARE APPROXIMATE LOCATIONS. THE CONTRACTOR SHALL ADD CATCH BASIN PROTECTION AS NECESSARY TO ALL GRATED CATCH BASINS THAT RECEIVE STORMWATER RUNOFF WITHIN THE PROJECT AREA AND THAT MAY OR MAY NOT BE SHOWN ON THE CSEC PLANS.

10. COMPOST SOCKS SHALL BE INSTALLED TO PREVENT SEDIMENT OR SEDIMENT LADEN WATERS FROM ENTERING GRATED ROADWAY INLETS WHICH HAVE NO SUMP AND MAY BE TOO SHALLOW TO EMPLOY CATCH BASIN FILTER SOCKS. OTHER BMPS, SUCH AS STREET SWEEPING AND VACUUMING SHALL ALSO BE EMPLOYED AS NEEDED TO REMOVE SEDIMENT.

11. AT NO TIME SHALL MORE THAN ONE FOOT OF SEDIMENT BE ALLOWED TO ACCUMULATE WITHIN A CATCH BASIN. ALL CATCH BASINS, INLETS AND CONVEYANCE LINES SHALL BE CLEANED PRIOR TO PAVING. THE CLEANING OPERATION SHALL NOT FLUSH SEDIMENT LADEN WATER INTO THE DOWNSTREAM SYSTEM.

12. THE CONTRACTOR SHALL PREPARE AND SUBMIT A TEMPORARY DISCHARGE PLAN (TDP), PER COS SPECIFICATIONS SECTION 8-01.3(2)D. IF DISCHARGE OF SITE WATER TO SEWER IS PROPOSED, DISCHARGE MONITORING SHALL BE PERFORMED BY THE TEMPORARY DISCHARGE LEAD IN ACCORDANCE WITH CITY SPECIFICATIONS AND APPLICABLE DISCHARGE PERMITS.

13. THE CONTRACTOR SHALL PREPARE AND SUBMIT A TREE, VEGETATION, AND SOIL PROTECTION PLAN (TVSPP) PER COS SPECIFICATIONS SECTION 8-01.3(2)B, AND PROTECT AND PRESERVE ALL EXISTING VEGETATION BEYOND THE CLEARING LIMITS.

14. THE CONTRACTOR SHALL PREPARE AND SUBMIT A SPILL PLAN (SP), PER COS SPECIFICATIONS SECTION 8-01.3(2)C. THE CONTRACTOR SHALL NOT DISCHARGE ANY CLEANING SOLVENTS OR CHEMICALS UTILIZED FOR TOOL OR EQUIPMENT CLEANING TO THE GROUND. REFUELING OF EQUIPMENT SHALL BE CONDUCTED AWAY FROM THE DRAINAGE FACILITIES AND DONE IN SUCH A MANNER AS TO PREVENT SPILLS FROM ENTERING THE GROUNDWATER OR WATER BODIES (INCLUDING WETLANDS). SPILLS SHOULD BE PREVENTED FROM HITTING THE GROUND.

15. FOLLOWING CONSTRUCTION, THE CONTRACTOR SHALL PERMANENTLY STABILIZE THE DISTURBED AREAS WITH PAVEMENT OR VEGETATED COVER BEFORE REMOVING ANY SILT FENCE, CHECK DAMS, SEDIMENT TRAPS OR SETTLING BASINS AND THEIR ASSOCIATED TEMPORARY DIVERSION DITCHES. SEDIMENTS SHALL NOT BE ALLOWED TO ENTER ANY STREAM OR DITCH AS A RESULT OF RUNOFF THAT MAY OCCUR AFTER CONSTRUCTION IS COMPLETED.

16. PER COS STANDARD SPECIFICATION SECTION 8-01.3(2)A AND THE CITY'S STORMWATER CODE, AREAS OF EXPOSED SOIL IN EXCESS OF 4,000 SQUARE FEET THAT WILL NOT BE DISTURBED FOR TWO DAYS DURING THE PERIOD FROM OCTOBER 1 TO APRIL 30, OR SEVEN DAYS DURING THE PERIOD FROM MAY 1 TO SEPTEMBER 30, WILL BE IMMEDIATELY STABILIZED WITH APPROVED CSEC METHODS (E.G., SEEDING, MULCHING, NETTING, CLEAR PLASTIC COVERING).

17. THE REFUSE RESULTING FROM CLEARING AND GRUBBING SHALL BE DISPOSED OF BY THE CONTRACTOR PER COS SPECIFICATIONS SECTION 1-07.3. IN NO CASE SHALL REFUSE MATERIAL BE LEFT ON THE PROJECT PROPERTY, PLACED ON ABUTTING PROPERTIES, OR BURIED IN EMBANKMENTS OR TRENCHES.

18. THE ENGINEER HAS THE AUTHORITY TO HALT CONSTRUCTION IF EROSION CONTROLS ARE NOT MAINTAINED PROPERLY OR IF A VIOLATION HAS NOT BEEN CORRECTED. THE CONTRACTOR SHALL BEAR ALL RISK AND ALL COSTS OF ANY WORK DELAYS CAUSED BY THESE ACTIONS.

19. THE CONTRACTOR'S CSECP SHALL REVIEW AND MODIFY THE CSEC PLANS ON AN AS NEEDED BASIS TO REFLECT THE SITE CONDITIONS AND CONSTRUCTION METHODS USED. THE CONTRACTOR'S CESCL SHALL CONDUCT SITE INSPECTIONS AT LEAST ONCE EVERY CALENDAR WEEK AND WITHIN 24 HOURS OF ANY RUNOFF DISCHARGE FROM SITE. AFTER ANY 24-HOUR RUNOFF PRODUCING EVENT, THE CESCL WILL INSPECT CSEC MEASURES FOR INTEGRITY. ANY DAMAGED CSEC MEASURES WILL BE BROUGHT TO THE ATTENTION OF THE ENGINEER AND REPAIRED IMMEDIATELY.

20. CONCRETE SAWCUTTING DEBRIS AND SLURRY SHALL BE CONTAINED AND MANAGED USING APPROPRIATE BMPS TO PREVENT CONTAMINATION OF SITE WATER AND MEET DISCHARGE REQUIREMENTS. FRESH CONCRETE CAN ALSO ADVERSELY AFFECT SITE WATER QUALITY. pH SAMPLING AND TESTING SHALL BE IN COMPLIANCE WITH APPLICABLE DISCHARGE AUTHORIZATIONS FROM KING COUNTY DURING CONCRETE POURS AND SAWCUTTING. IF pH EXCEEDS DISCHARGE LIMITS, APPROPRIATE BMPS SHALL BE APPLIED.

21. THE CONTRACTOR SHALL SET ASIDE A SEPARATE AREA FOR THE WASH-OUT OF CONSTRUCTION EQUIPMENT AND TOOLS.

22. A TIRE WASH IS NOT PROPOSED FOR THIS PROJECT AS THE ENTIRE SITE IS PAVED OR HARD SURFACED. CONTRACTOR SHALL EMPLOY OTHER BMPS TO PREVENT TRACKING OF EXCAVATED DIRT ONTO ROADWAY AND OFFSITE. IF A TIRE WASH IS PROPOSED, WASH WATER MUST BE DISPOSED AT AN APPROPRIATE FACILITY.

23. ALL DISCHARGES TO SEWER REQUIRE PRIOR, WRITTEN PERMISSION FROM KING COUNTY INDUSTRIAL WASTE, IN COORDINATION WITH SPU. TIRE WASH WATER AND OTHER PROCESS WATER MAY BE DISCHARGED TO THE SEWER SYSTEM AS PART OF THE KING COUNTY PERMIT. PERMITS FOR DISCHARGE TO SEWER MUST BE OBTAINED BY THE CONTRACTOR AT THE CONTRACTOR'S EXPENSE. CONTRACTOR SHALL VERIFY ON THEIR CSECP THE APPROPRIATENESS OF AND ACCESS TO PROPOSED POINT OF DISCHARGE TO SPU'S SEWER SYSTEM.

24. TEMPORARY TRENCH DEWATERING SHALL BE DISCHARGED TO AN APPROVED LOCATION. DISCHARGES TO THE SEWER SYSTEM SHALL COMPLY WITH ALL PROVISIONS OF ANY DISCHARGE AUTHORIZATIONS FROM KING COUNTY AND SPU, AS WELL AS COS SPECIFICATIONS SECTION 2-08.3.

25. EXCAVATION SPOILS MAY BE EXTREMELY WET. CONTRACTOR SHALL PREVENT MUD AND WATER FROM BEING TRACKED ALONG HAULING ROUTES BY LINING TRUCK BEDS OR BY OTHER MEANS AS NECESSARY.

26. THE CONTRACTOR IS RESPONSIBLE FOR THE SEQUENCING AND STAGING OF ALL DEMOLITION AND CSEC ACTIVITIES AT APPROPRIATE TIMES.

SDOT PERMIT #240906

VAULT SERIAL NO.	DATE	MARK	NATURE REVISIONS	MADE	CHK'D	REV'D
36323						

J:\PDB\WS434\Public\Design Standards Guidelines\Working Files\Chapter 3\2 C413051-P-Notes.dwg
huberd Jul-17-15 2:49pm

100% SUBMITTAL

NOTES

APPROVED FOR ADVERTISING NANCY LOCKE DEPARTMENT OF FINANCE & ADMINISTRATIVE SERVICES	NAME OR INITIALS AND DATE	INITIALS AND DATE
SEATTLE, WASHINGTON 20	DESIGNED	REVIEWED: DES. CONST. SDOT PROJ. MGR.
BY: PURCHASING & CONTRACTING SERVICES DIRECTOR	CHECKED	RECEIVED
	DRAWN JLA CHECKED	REVISED AS BUILT
	ALL WORK SHALL BE DONE IN ACCORDANCE WITH THE CITY OF SEATTLE STANDARD PLANS AND SPECIFICATIONS AND OTHER DOCUMENTS CALLED FOR IN SECTION 0-02.3 OF THE PROJECT MANUAL.	

Seattle Public Utilities

City of Seattle

Ray Hoffman, Director

ORDINANCE NO. APPROVED

FUND:

SCALE: NONE INSPECTOR'S BOOK

JOB NO. PC R/W CO

VAULT PLAN NO.

SHEET 1 OF 1

SAMPLE WATER MAIN CSEC PLAN

CURB AND GUTTER ROADWAY, NO GROUNDWATER

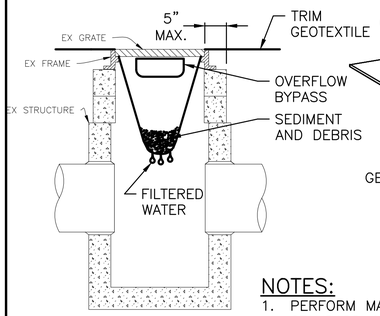

CROSS SECTION

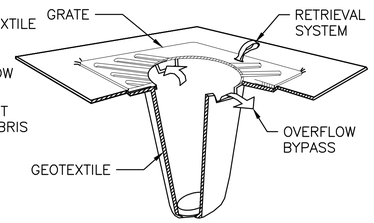

ISOMETERIC VIEW

NOTES:

1. PERFORM MAINTENANCE IN ACCORDANCE WITH STANDARD SPECIFICATION 8-01.3 (12B).
2. SIZE THE BELOW GRATE INLET DEVICE (BGID) FOR THE STORM WATER STRUCTURE IT WILL HAVE SERVICE.
3. THE BGID SHALL HAVE A BUILT-IN HIGH-FLOW RELIEF SYSTEM (OVERFLOW BYPASS).
4. THE RETRIEVAL SYSTEM MUST ALLOW REMOVAL OF THE BGID WITHOUT SPILLING THE COLLECTED MATERIAL.

STORM DRAIN CB PROTECTION 1/3

NTS

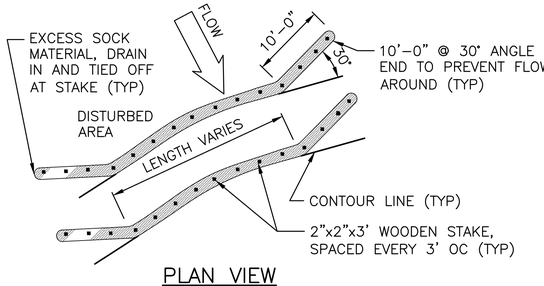

PLAN VIEW

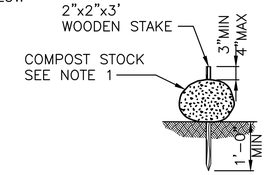

DETAIL

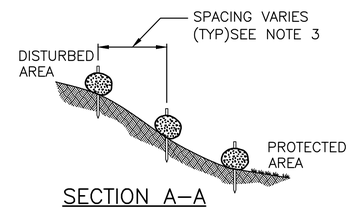

SECTION A-A

(SHOWN AS SLOPE PROTECTION)

COMPOST SOCK NOTES:

SLOPE	MAXIMUM SPACING
1:1	10'-0"
2:1	20'-0"
3:1	30'-0"
4:1	40'-0"

COMPOST SOCK/STRAW WATTLES 2/3

NTS

STRAW WATTLE NOTES:

1. WATTLES SHALL BE IN ACCORDANCE WITH COS STANDARDS. INSTALL WATTLES ALONG CONTOURS.
2. SECURELY KNOT EACH END OF WATTLE. ABUT ADJACENT WATTLES TIGHTLY, END TO END, WITHOUT OVERLAPPING THE ENDS.
3. PILOT HOLES MAY BE DRIVEN THROUGH THE WATTLES AND INTO THE SOIL WHEN SOIL CONDITIONS REQUIRE.
4. LIVE STAKES MAY BE USED FOR PERMANENT INSTALLATION AND SHALL BE IN ACCORDANCE WITH COS STANDARDS.
5. WATTLES SHALL BE INSPECTED REGULARLY, AND IMMEDIATELY AFTER A RAINFALL PRODUCES RUNOFF, TO ENSURE THEY REMAIN THOROUGHLY ENTRENCHED AND IN CONTACT WITH THE SOIL.
6. PERFORM MAINTENANCE IN ACCORDANCE WITH COS STANDARDS.

COMPOST SOCK NOTES:

1. COMPOST SOCK SHALL BE IN ACCORDANCE WITH STANDARD SPECIFICATION 9.14.4(9). COMPOST SOCK SHALL BE A MINIMUM OF10" IN DIAMETER OR SIZED TO SUIT CONDITIONS AS SPECIFIED BY THE ENGINEER.
2. ALWAYS INSTALL COMPOST SOCK PERPENDICULAR TO SLOPE AND ALONG CONTOUR LINES.
3. REMOVE SEDIMENT FROM THE UP SLOPE SIDE OF THE COMPOST SOCK WHEN ACCUMULATION HAS REACHED 1/2 OF THE EFFECTIVE HEIGHT OF THE COMPOST SOCK.
4. MAY BE USED IN PLACE OF FILTER FENCE FOR PERMITER CONTROL.

N

20 10 0 20 40

SCALE IN FEET

REMOVAL AND DEMOLITION LEGEND:

- SAW CUT CEMENT CONCRETE FULL DEPTH PER SECTION 2-02.3(6)
- REMOVE ASPHALT OVERLAY (R.A.O.) PER SECTION 2-02.3(3)B
- PIPE TO BE REMOVED BY SPU
- REMOVE RIGID PAVEMENT PER SECTION 2-02.3(3)C

CSEC LEGEND:

- CB PROTECTION
- COMPOST SOCK

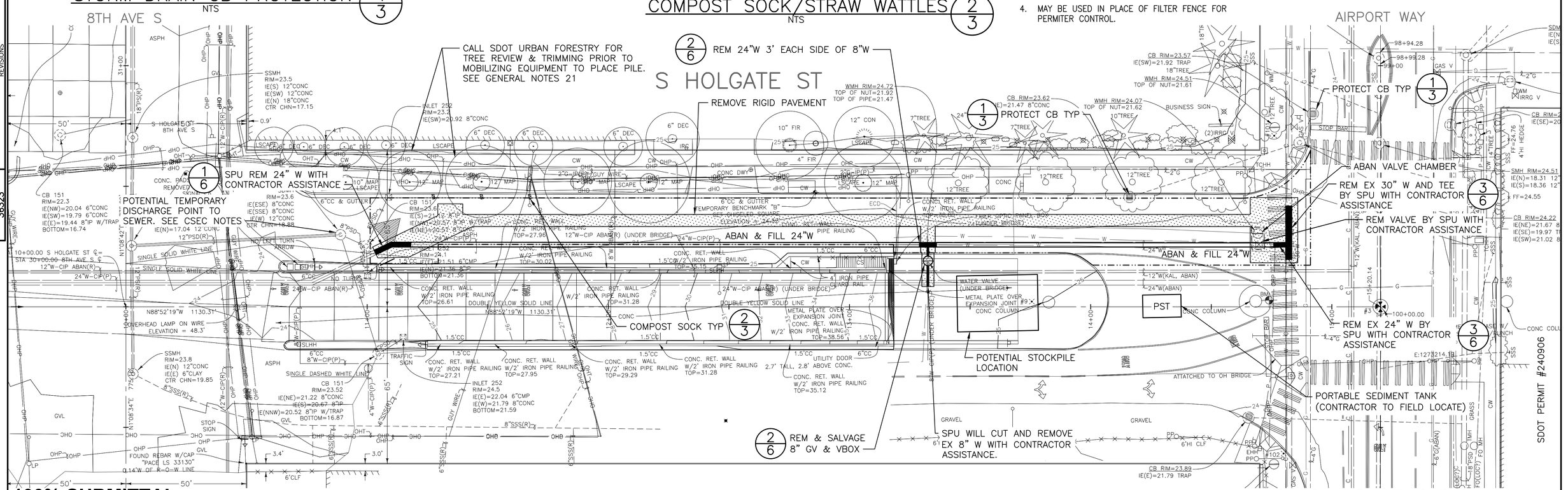

CSEC AND DEMOLITION PLAN

100% SUBMITTAL

VAULT SERIAL NO.	DATE	MARK	NATURE REVISIONS	MADE	CHK'D	REV'D
36323						

APPROVED FOR ADVERTISING
NANCY LOCKE
DEPARTMENT OF FINANCE & ADMINISTRATIVE SERVICES
SEATTLE, WASHINGTON 20

BY:
PURCHASING & CONTRACTING SERVICES DIRECTOR

NAME OR INITIALS AND DATE	INITIALS AND DATE
DESIGNED	REVIEWED:
CHECKED	DES. CONST.
	SDOT PROJ. MGR.
DRAWN JLA	RECEIVED
CHECKED	REVISED AS BUILT

ALL WORK SHALL BE DONE IN ACCORDANCE WITH THE CITY OF SEATTLE STANDARD PLANS AND SPECIFICATIONS AND OTHER DOCUMENTS CALLED FOR IN SECTION 0-02.3 OF THE PROJECT MANUAL.

Seattle Public Utilities

City of Seattle

Ray Hoffman, Director

ORDINANCE NO. APPROVED
FUND:
SCALE: 1"=20' INSPECTOR'S BOOK

JOB NO. PC R/W CO

VAULT PLAN NO.

SHEET 1 OF 1

J:\PDB\WS434\Public\Design Standards Guidelines\Working Files\Chapter 3\3 C413051-P-CSEC-DEMO.dwg
huberd Jul-17-15 3:02pm

SAMPLE BIORETENTION CSEC PLAN

(DITCH & CULVERT, NO CURB OR GUTTER)

CSEC NOTES:

1. THE CONTRACTOR SHALL BE RESPONSIBLE TO PREVENT EROSION, CONTROL SEDIMENTATION, AND SHALL BE PROHIBITED FROM DISCHARGE OF SEDIMENT–LADEN RUNOFF BEYOND THE CONSTRUCTION LIMITS OF THIS PROJECT.

2. THE CONTRACTOR SHALL SUBMIT AT THE PRE–CONSTRUCTION MEETING THE CONSTRUCTION STORMWATER POLLUTION PREVENTION SUBMITTALS PER SPECIFICATION SECTIONS 1–05.13(3), 8–01.3(2) AND SCHEDULE PER SECTION 1–08.3, WHICH INCLUDE:
   - CONSTRUCTION STORMWATER AND EROSION CONTROL PLAN (CSECP)
   - TREE, VEGETATION AND SOIL PROTECTION PLAN (TVSPP)
   - SPILL PREVENTION PLAN (SPP)
   - TEMPORARY DISCHARGE PLAN (TDP)

3. PROTECTION AND RESTORATION OF BIORETENTION CELLS:
   A. PROTECT ALL BIORETENTION CELLS (EXCEPT THOSE DESIGNATED AS TEMP SEDIMENTATION CELLS) FROM ACCUMULATING SEDIMENT. IF BIORETENTION CELLS ACCUMULATE SEDIMENT DURING CONSTRUCTION, RESTORE THE CELLS TO THEIR FULLY FUNCTIONING CONDITION AS DIRECTED BY THE ENGINEER. RESTORING THE BIORETENTION CELL MUST INCLUDE REMOVAL OF SEDIMENT AND ANY SEDIMENT–LADEN BIORETENTION SOILS, EXCAVATION TO 3" MIN BELOW THE BOTTOM OF ANY CELLS AND REPLACE BIORETENTION SOILS TO THE PROPOSED GRADE.
   B. PREVENT COMPACTING BIORETENTION SOIL IN THE CELLS BY EXCLUDING CONSTRUCTION EQUIPMENT AND MINIMIZING FOOT TRAFFIC FROM THE BIORETENTION CELL AREA THAT ARE UNDER CONSTRUCTION OR ARE COMPLETED. IF BIORETENTION CELLS ARE COMPACTED, RESTORE THE CELLS TO A FULLY FUNCTIONING INFILTRATION CONDITION AS DIRECTED BY THE ENGINEER BY OVER–EXCAVATING THE COMPACTED AREA AND PLACING THE BIORETENTION SOIL IN AN UNCOMPACTED STATE.

CSEC LEGEND:

- INLET PROTECTION 2/10
- TEMPORARY CHECK DAM 5/10
- ASPHALT BERM 4/10
- SAND BAGS (FILLED WITH BIORETENTION SOIL) OR COMPOST SOCK
- SILT FENCE 1/10
- ORANGE CONSTRUCTION FENCE 3/10
- DRAINAGE BYPASS LINE
- TEMPORARY SEDIMENTATION CELL
- PROTECTION OF TREE CANOPY AND ROOTS THAT RESIDE WITHIN THE ROW PER THE APPROVED TREE, VEGETATION AND SOIL PROTECTION PLAN (TVSPP) AND COS STD PLAN 132a AND 133

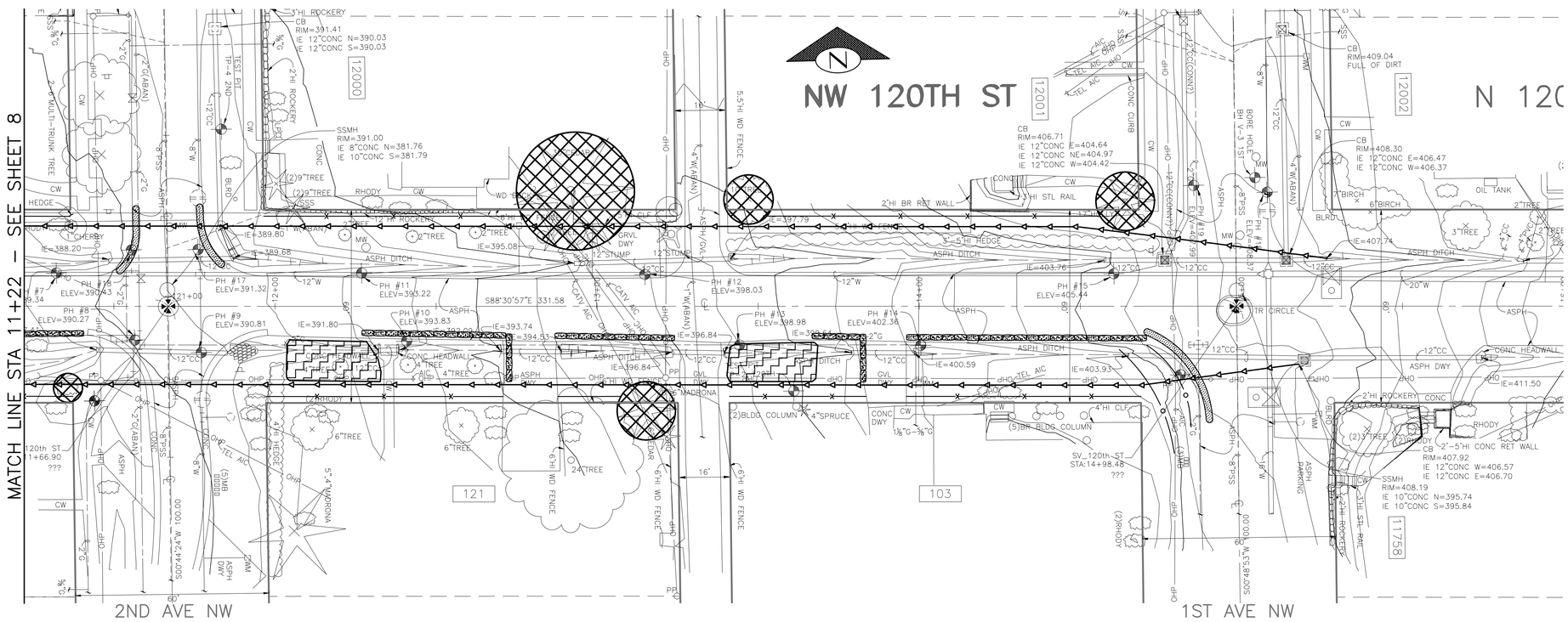

N

20 10 0 20 40

SCALE IN FEET

(FOR INFORMATION ONLY)

SDOT\SIP NO. 152653

VAULT SERIAL NO.	DATE	MARK	NATURE REVISIONS	MADE	CHK'D	REV'D
36124						

J:\PDB\WS434\Public\Design Standards Guidelines\Working Files\Chapter 3\9 C302317–P–EROS–120TH 2 of 2.dwg
huberd Jul–30–15 11:11am

REVIEWED BY SPU/WATER ENGINEERING ..... 20....	APPROVED FOR ADVERTISING NANCY LOCKE DEPARTMENT OF FINANCE & ADMINISTRATIVE SERVICES SEATTLE, WASHINGTON 20
REVIEWED BY SPU/DRAINAGE ..... 20....	BY: PURCHASING & CONTRACTING SERVICES DIRECTOR
APPROVED BY SDOT STREET IMPROVEMENT PERMITTING ..... 20....	

NAME OR INITIALS AND DATE	INITIALS AND DATE
DESIGNED	REVIEWED: DES. CONST. SDOT PROJ. MGR.
CHECKED	
DRAWN	RECEIVED
CHECKED	REVISED AS BUILT

ALL WORK SHALL BE DONE IN ACCORDANCE WITH THE CITY OF SEATTLE STANDARD PLANS AND SPECIFICATIONS AND OTHER DOCUMENTS CALLED FOR IN SECTION 0–02.3 OF THE PROJECT MANUAL.

Seattle Public Utilities

City of Seattle

Ray Hoffman, Director

ORDINANCE NO. APPROVED

FUND:

SCALE: 1"=20' INSPECTOR'S BOOK

JOB NO. PC R/W CO

VAULT PLAN NO.

SHEET 1 OF 1

SAMPLE BIORETENTION CSEC PLAN

(DITCH & CULVERT, NO CURB OR GUTTER)

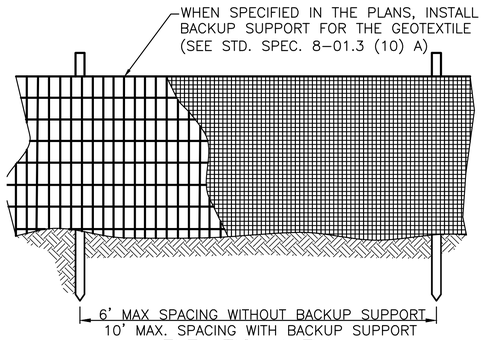

ELEVATION VIEW

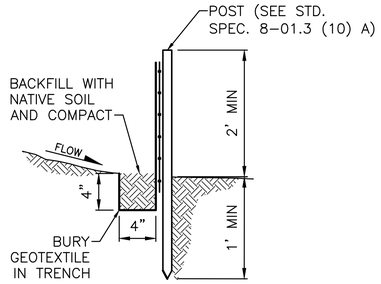

SIDE VIEW

SILT FENCE DETAILS (1) 5,6,7,8&9
NTS

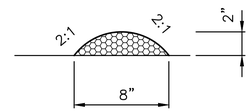

TEMPORARY ASPHALT BERM (4) 5,6,7,8&9
NTS

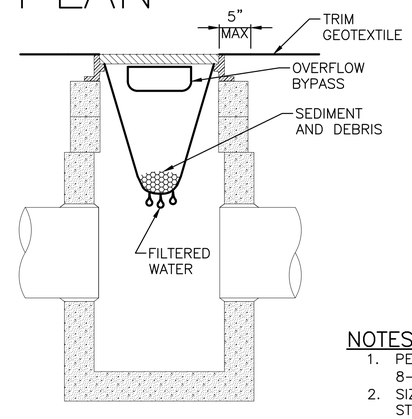

CROSS SECTION

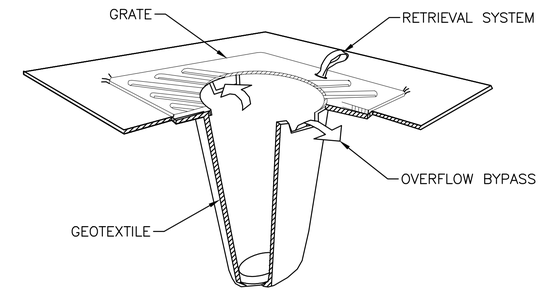

ISOMETRIC VIEW

NOTES:

1. PERFORM MAINTENANCE IN ACCORDANCE WITH STANDARD SPECIFICATION 8-01.3 (12B).
2. SIZE THE BELOW GRATE INLET DEVICE (BGID) FOR THE STORM WATER STRUCTURE IT WILL SERVICE.
3. THE BGID SHALL HAVE A BUILT-IN HIGH-FLOW RELIEF SYSTEM (OVERFLOW BYPASS).
4. THE RETRIEVAL SYSTEM MUST ALLOW REMOVAL OF THE BGID WITHOUT SPILLING THE COLLECTED MATERIAL.

STORM DRAIN INLET PROTECTION (2) 5,6,7,8&9
NTS

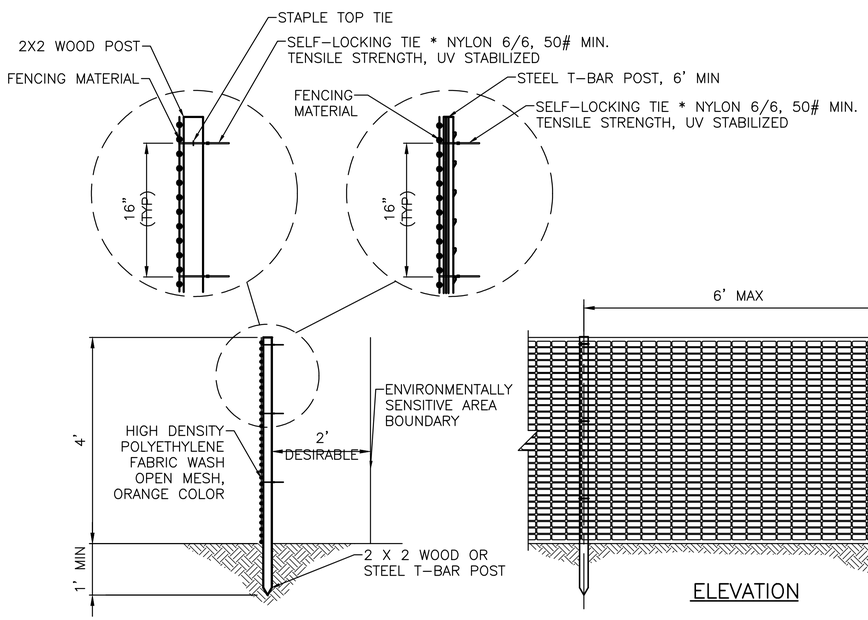

SIDE VIEW

ELEVATION

ORANGE CONSTRUCTION FENCE (3) 5,6,7,8&9
NTS

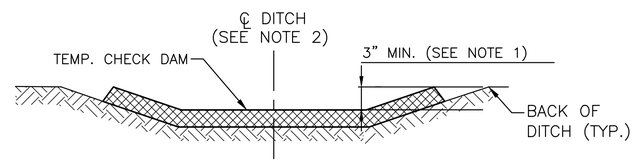

SECTION A-A 10
NTS

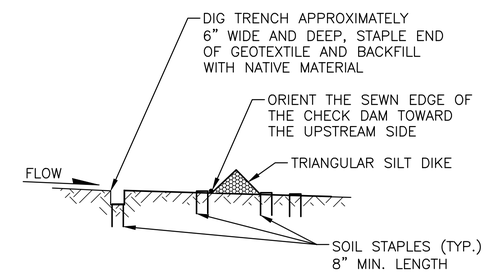

SECTION B-B 10
NTS

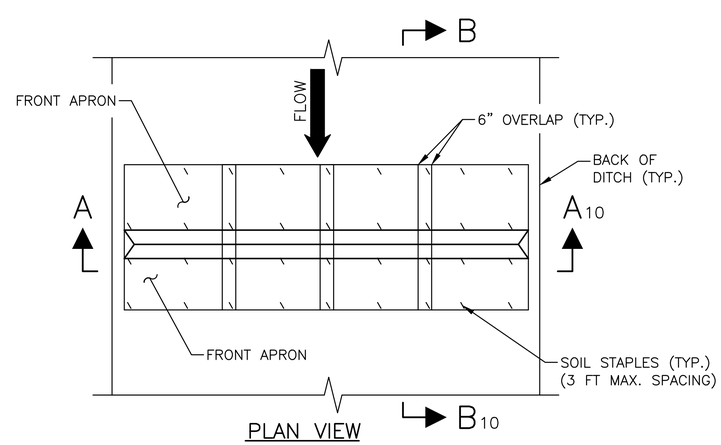

PLAN VIEW

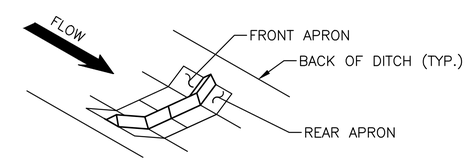

ISOMETRIC VIEW

NOTES:

1. INSTALL THE SLOPED ENDS OF THE CHECK DAM A MINIMUM OF 3" HIGHER THAN THE TOP OF THE CHECK DAM IN THE CHANNEL TO ENSURE THAT WATER FLOWS OVER THE DAM AND NOT AROUND IT.
2. FLAT BOTTOM DITCH DESIGN SHOWN, CHECK DAM INSTALLATION DETAILS ARE SIMILAR FOR "V" BOTTOM DITCHES.

TEMPORARY CHECK DAM (5) 5,6,7,8&9
NTS

CSEC DETAILS

SDOT\SIP NO. 152653

VAULT SERIAL NO.	DATE	MARK	NATURE REVISIONS	MADE	CHK'D	REV'D
38124						

REVIEWED BY SPU/WATER ENGINEERING ..... 20.....
REVIEWED BY SPU/DRAINAGE ..... 20.....
APPROVED BY SDOT STREET IMPROVEMENT PERMITTING ..... 20.....

APPROVED FOR ADVERTISING
NANCY LOCKE
DEPARTMENT OF FINANCE & ADMINISTRATIVE SERVICES
SEATTLE, WASHINGTON 20
BY:
PURCHASING & CONTRACTING SERVICES DIRECTOR

NAME OR INITIALS AND DATE	INITIALS AND DATE
DESIGNED CHECKED	REVIEWED: DES. CONST. SDOT PROJ. MGR.
DRAWN CHECKED	RECEIVED REVISED AS BUILT

ALL WORK SHALL BE DONE IN ACCORDANCE WITH THE CITY OF SEATTLE STANDARD PLANS AND SPECIFICATIONS AND OTHER DOCUMENTS CALLED FOR IN SECTION 0-02.3 OF THE PROJECT MANUAL.

Seattle Public Utilities
City of Seattle
Ray Hoffman, Director
ORDINANCE NO.
FUND:
SCALE: AS NOTED
APPROVED
INSPECTOR'S BOOK

JOB NO. PC R/W CO
VAULT PLAN NO.
SHEET 2 OF 2

J:\PDB\W543A\Public\Design Standards Guidelines\Working Files\Chapter 3\10 C302317-P-EROS-DETL.dwg
huberd Jul-17-15 1:06pm