CITY OF SEATTLE

STANDARD PLANS
and
SPECIFICATIONS

Seventh Edition
1964

Contract Construction

R.C. SHANK

CITY OF SEATTLE

DEPARTMENT OF ENGINEERING

ROY W. MORSE, CITY ENGINEER

MEMBER, BOARD OF PUBLIC WORKS

J. D. Braman, Mayor

May 17, 1965

TO: Holders of Seventh Edition, City of Seattle Standard Plans and Specifications

SUBJECT: First Revisions to 1964 Seventh Edition, City of Seattle Standard Plans and Specifications

The attached 19 pages of revised Seventh Edition specifications (revised 3-3-65 as noted in the lower margin of the page), 37 standard plans (revised 1-6-65 as noted on the left margin of the standard plan title block), and two new standard plans, as listed below, supersede the corresponding Seventh Edition page or standard plan in your copy of the subject standard plans and specifications.

The backs or margins of the respective pages or plans are gummed for your convenience to insert them over the original printing.

Please place this listing in your copy of the Seventh Edition opposite the title page.

Pages Revised (3-3-65)

Page 8	Page 17	Page 57	Page 62	Page 72
" 10	" 29	" 58	" 64	" 74
" 15	" 53	" 59	" 65	" 75
" 16	" 56	" 61	" 70	

Standard Plans Revised (1-6-65)

Std. Plan No. 102	Std. Plan No. 136	Std. Plan No. 181
" " " 102.1	" " " 137	" " " 182
" " " 103	" " " 138	" " " 183
" " " 114	" " " 139	" " " 184
" " " 115	" " " 140	" " " 185
" " " 116	" " " 151 (New)	" " " 186
" " " 117	" " " 152	" " " 186.1
" " " 130	" " " 153	" " " 187
" " " 131	" " " 170	" " " 191
" " " 132	" " " 171 (New)	" " " 195
" " " 133	" " " 177	" " " 209
" " " 134	" " " 179	
" " " 135	" " " 180	

ROY W. MORSE
City Engineer

HMF/WEPS:vmm
Attachment

CITY OF SEATTLE

Standard Plans and Specifications

Seventh Edition 1964

Prepared by the City Engineer

Roy W. Morse, City Engineer
James Robertson, Retired Principal Assistant City Engineer
Phillip M. Burswell, Principal Assistant City Engineer

Examined and Approved by the Board of Public Works January 8, 1964

Roy W. Morse, City Engineer–Chairman
J. Ray Heath, Superintendent of Water
John M. Nelson, Superintendent of Lighting
Fred B. McCoy, Superintendent of Building
Everett G. Henry, Secretary

This Seventh Edition is a supplement to the STANDARD SPECIFICATIONS FOR MUNICIPAL PUBLIC WORKS CONSTRUCTION, First Edition 1963, Published by the WASHINGTON STATE CHAPTER AMERICAN PUBLIC WORKS ASSOCIATION

Distributed by the City Engineer
910 Municipal Building
Seattle, Washington 98104
Price $5.00

L & H PRINTING CO.

FOREWORD

This 1964 Seventh Edition of City of Seattle Standard Plans and Specifications supplements and modifies the 1963 edition of the Washington State Chapter American Public Works Association (APWA) Standard Specifications for public works construction, which is hereby adopted except as herein modified.

For every City of Seattle sponsored public works project, these specifications together with the aforementioned APWA standards, the laws of the State of Washington, the Charter and ordinances of the City of Seattle, the project proposal, the project plans (including modifications thereto made during the progress of the work) shall constitute the contract for the project and shall be considered as a whole.

These standards shall also apply whenever any public works construction is performed by private parties at their own expense under authority granted by ordinance of the City Council or permit of the Board of Public Works. All requirements of these specifications shall apply to such work in the same manner as though the work were being done under Board of Public Works contract with the exception of any requirements or conditions pertaining to payment for the work performed or to withholding or receiving money due the Contractor. All matters relating to financing of such work shall be between the permittee and the Contractor and the City shall not enter into such matters.

The format conforms to the APWA standard. For each APWA section and its subsections, this edition contains the revisions made thereto for use by the City of Seattle.

APWA sections and subsections which are adopted verbatim by the City will have the appropriate section and subsection referred to by number, title and APWA page only.

APWA sections and subsections which are not to be used as a City of Seattle standard are shown by the APWA section number and title only, followed by:—(Not Used).

New numbered sections and subsections not now published in the APWA 1963 edition will be identified by the section number and the title followed by:—(New Section).

APWA sections and subsections, the titles of which have been changed for City use, will be identified by the APWA section and subsection number and the new title followed by:—(Title changed for City use).

Division V—Structural Specifications, i.e. Sections 100 to 118, inclusive, is not in the APWA 1963 publication. This division has been adapted for use by the City from the State of Washington Standard Specifications for Road and Bridge Construction, 1963.

APWA Division VIII—Standard Plans—is supplemented by standard plan numbers greater than one hundred, i.e., 101 to 217, inclusive, for use with this publication.

IMPORTANT NOTICE

Copies of this seventh edition are numbered serially and the City Engineer maintains a register of all persons or agencies holding copies. Revisions therto, as printed, will be mailed to holders of record at the address on file in the office of the City Engineer. Please notify the City Engineer, attention Standard Specifications Resgister, of any changes of address.

TABLE OF CONTENTS

LIST OF SECTIONS

DIVISION I—GENERAL REQUIREMENTS AND COVENANTS

Sec.	Title	Page
1	Definitions and Terms	1
2	Proposal Requirements and Conditions	1
3	Award and Execution of Contract	2
4	Scope of Work	2
5	Control of Work	3
6	Control of Materials	5
7	Legal Relations and Responsibility to the Public	6
8	Prosecution and Progress	7
9	Measurement and Payment	8

DIVISION II—STREETS AND RELATED WORK

Sec.	Title	Page
12	Clearing and Grubbing	11
13	Street and Drainage Excavation	12
14	Haul	15
15	Subgrade	15
16	Water	16
17	Excavation for Structures	17
21	Weighing Equipment	17
22	Production from Quarry and Pit Sites	17
23	Crushed Surfacing, Ballasting and Stockpiling	18
24	Filler	19
25	Screened Gravel Surfacing—One Course	19
26	Bank Run Gravel, Mineral Aggregates for Streets	19
27	Asphalt Materials	21
32	Bituminous Surface Treatment	21
33	Bituminous Plant Mix Pavement	21
34	Asphalt Concrete Pavement	23
35	Extruded Asphalt Concrete Curb	26
36	Beam Guard Rail	27
38	Cement Concrete Stairways and Landings	28
39	Cement Concrete Pavement	29
40	Cement Concrete Curb, Curb and Gutter	37
41	Cement Concrete Driveways	39
42	Cement Concrete Sidewalks	40
43	Cement Concrete Combined Sidewalk, Curb and Gutter	41
44	Precast Concrete Traffic Curb, Type 123, Traffic Buttons, and Extruded Traffic Curb	41
45	Block Precast Traffic Curb Type 124	42
46	Illuminated Terminal Nosing	42
47	Erosion Control	43
48	Roadside Planting	45
49	Sprinkler Irrigation System	48
50	Monuments	50
51	Sidewalk Drain for Building Downspout	50
52	Removal of Existing Street Improvements	50
53	Adjustment of New and Existing Utility Structures to Finish Grade	52
54	Pavement Patching	54
55	Top Soil	54
56	Lawn Removal and Replacement	54
57	Finishing and Cleanup	54

DIVISION III—SANITARY SEWER AND STORM DRAINS

Sec.	Title	Page
60	Pipe Materials and Testing for Sewers, Drains and Culverts	56
61	Trench Excav., Backfill, Foundation and Bedding for Sewers, Drains and Culverts	56
62	Pipe Laying, Bedding and Testing	59
63	Manholes for Storm and Sanitary Sewers	61
64	Catch Basins and Inlets	64
65	Subsurface Drains	65
66	Side Sewers	66
67	Pipe Covering and Embankment for Sewer Construction	68
68	Finishing and Cleanup for Underground Conduits	68
69	Pipe Connections	68

DIVISION IV—WATER DISTRIBUTION

Sec.	Title	Page
72	Pipe for Water Mains	70
73	Trench Excavation and Backfill for Water Mains	70
74	Pipe Installation for Water Mains	71
75	Gate Valves for Water Mains	74
76	Valve Chambers and Boxes for Water Mains	75
77	Fire Hydrants	76
78	Restoration and Cleanup of Water Main Construction	78

DIVISION V—STRUCTURAL

Sec.	Title	Page
100	Structures—General	79
101	Concrete Structures	80
102	Steel Structures	83
103	Timber Structures	84
104	(Spare)	87
105	(Spare)	87
106	Piling	87
107	Portland Cement Concrete for Structures	94
108	(Spare)	100
109	(Spare)	100
110	(Spare)	100
111	Reinforcing Steel	100
112	Structural Steel	102
113	Castings, Steel Forgings and Miscellaneous Metals	107
114	Timber and Lumber	108
115	Preservative Treatment for Timber, Lumber and Piling	108
116	Paints and Painting	112
117	Bridge Railing	120
118	Waterproofing	121

NOTE: The several spare section numbers above have been reserved for subjects to be added in subsequent publications of these standard specifications.

DIVISION VI—STANDARD FORMS

See pages 123 through 140

DIVISION VII—STANDARD PLANS

See pages 141 and 142 for complete list of standard plans referred to in the text of this publication by plan numbers, 100 through 217. The plans follow thereafter on pages 143 through 250.

INDEX

Starts on page 251.

SUMMARY OF SECTIONS AND SUBSECTIONS, AND REFERENCE PAGES THERETO

DIVISION ONE

GENERAL REQUIREMENTS AND COVENANTS

Section 1—Definitions and Terms

Sec.	Title	Page
1.01	OWNER, OR CITY	1
	1.01A Board of Public Works	1
1.02	ENGINEER	1
1.03	CONSULTING ENGINEER	1
1.04	INSPECTOR	1
1.05	SPECIFICATIONS	1
1.06	SPECIAL PROVISIONS	1
1.07	SUPPLEMENTAL SPECIFICATIONS	1
1.08	PLANS	1
1.09	BIDDER	1
1.10	PROPOSAL	1
1.11	PROPOSAL GUARANTY, BID BOND	1
1.12	CONTRACT	1
1.13	AMOUNT OF CONTRACT	1
1.14	CONTRACTOR	1
1.15	SUBCONTRACTOR	1
1.16	CONTRACT BOND, PERFORMANCE BOND	1
1.17	SURETY	1
1.18	WORK	1
1.19	DAYS	1
1.20	LIQUIDATED DAMAGES	1
1.21	"OR EQUAL"	1
1.22	ABBREVIATIONS	1
1.23	HIGHWAY, STREET, ROAD OR ALLEY	1
1.24	ARTERIAL STREET	1
1.25	RIGHT OF WAY, EASEMENT	1
1.26	ROADWAY	1
1.27	SUBGRADE	1
1.28	SURFACING	1
1.29	TRAVELED WAY	1
1.30	PAVEMENT	1
1.31	BRIDGE	1
1.32	CULVERT	1
1.33	TRAFFIC	1
1.34	TRAFFIC CONTROL DEVICES	1
1.35	WORK PAYMENT BY BID ITEMS	1

Section 2—Proposal Requirements and Conditions

2.01	CONTENTS OF PROPOSAL FORMS	1
2.02	EXAMINATION OF PLANS, SPECIFICATIONS AND SITE OF WORK	1
2.03	INTERPRETATION OF CONTRACT DOCUMENTS	1
2.04	QUANTITIES AND UNIT PRICES	1
2.05	QUALIFICATION OF BIDDERS	1
2.06	PREPARATION OF PROPOSAL	1
2.07	DELIVERY OF PROPOSAL	2
2.08	WITHDRAWAL OR REVISION OF PROPOSAL	2
2.09	SUPPLEMENTAL PROPOSALS	2
2.10	PROHIBITION OF ALTERATIONS	2
2.11	OPENING OF PROPOSALS	2
2.12	REJECTION OF PROPOSAL	2
2.13	PROPOSAL GUARANTY	2
2.14	FAMILIARITY WITH LAWS AND ORDINANCES	2

Section 3—Award and Execution of Contract

3.01	AWARD OF CONTRACT	2
3.02	RETURN OF PROPOSAL GUARANTY	2
3.03	EXECUTION OF CONTRACT	2
3.04	PERFORMANCE BOND, CONTRACT BOND	2
3.05	FAILURE TO EXECUTE CONTRACT	2
3.06	NON-COLLUSION AFFIDAVIT	2
3.07	CONTRACTOR'S INSURANCE	2
	3.07A Compensation Insurance	2
	3.07B Public Liability and Property Damage Insurance	2
	3.07C Indemnify Owner from Loss	2
	3.07D Street Obstruction Bond	2
3.08	PROOF OF CARRIAGE OF INSURANCE	2

Section 4—Scope of Work

Sec.	Title	Page
4.01	INTENT OF CONTRACT	2
4.02	ADDITIONAL INSTRUCTIONS	2
4.03	INCREASE OR DECREASE OF WORK	2
4.04	EXTRA WORK	3
4.05	CHANGED CONDITIONS	3
4.06	WASTE SITES	3
	4.06A Private Property Abutting the Project	3
	4.06B Waste Sites Designated on the Construction Plans	3
	4.06C Waste Sites to be Provided by the Contractor	3
4.07	SALVAGE	3
4.08	FINISHING AND CLEANUP	3
4.09	PROTESTS	3

Section 5—Control of Work

5.01	AUTHORITY OF ENGINEER	3
5.02	AUTHORITY AND DUTIES OF INSPECTORS	3
5.03	COOPERATION BY CONTRACTOR	3
5.04	INTERFERENCE WITH OTHER CONTRACTORS	3
5.05	NOTIFICATIONS RELATIVE TO CONTRACTOR'S ACTIVITIES	3
5.06	ENGINEERING, LOCATIONS, LINE AND GRADE	4
5.07	REMOVAL OF DEFECTIVE OR UNAUTHORIZED WORK	4
5.08	MOVING OF PUBLIC AND PRIVATE UTILITIES	4
5.09	PROTECTION OF PUBLIC AND PRIVATE UTILITIES	4
5.10	DAMAGE TO EXISTING IMPROVEMENTS AND UTILITIES	4
5.11	INSPECTION BY ENGINEER	4
5.12	MAINTENANCE OF WORK AFTER ACCEPTANCE	4
5.13	WATER AND POWER	4
	5.13A Water for Construction	4
	5.13B Water from Hydrants	4
	5.13C Payment for Water Department Work	4
	5.13C1 Contractor	4
	5.13C2 Improvement Fund	5
	5.13C3 Water Department	5
	5.13D Notice to Water Department	5
5.14	METHOD OF SERVING NOTICE	5
5.15	VERBAL AGREEMENTS	5
5.16	FINAL INSPECTION	5

Section 6—Control of Materials

6.01	SOURCE OF SUPPLY AND QUALITY OF MATERIALS	5
6.02	SAMPLES AND TESTS	5
6.03	SPECIAL METHODS OF TEST	6
6.04	STORAGE OF MATERIALS	6
6.05	DEFECTIVE MATERIALS	6
6.06	SIEVES FOR TESTING PURPOSES	6

Section 7—Legal Relations and Responsibility to the Public

7.01	MUNICIPAL REGULATIONS AND STATE LAWS	6
7.02	CONTRACT BOND, PERFORMANCE BOND	6
7.03	ACCIDENT PREVENTION	6
7.04	PROTECTION OF WORKMEN AND PROPERTY	6
7.05	LABOR	6
7.06	SELECTION OF LABOR (Chapter 246, Laws of 1943, RCW Chapter 39.16)	6
7.07	LEGAL WAGES ON PUBLIC WORKS	6
	7.07A Hours of Work	6
7.08	PAYMENT OF BILLS	7
	7.08A Failure to Pay for Labor and Materials	7
	7.08B Bills of City Departments—How Paid	7
7.09	STATE SALES TAX	7
7.10	PERMITS AND LICENSES	7
7.11	ROYALTIES AND PATENTS	7
7.12	USE OF PREMISES	7
7.13	CONFINE OPERATIONS WITHIN RIGHTS OF WAY AND EASEMENTS	7
7.14	SAFEGUARDS	7
	7.14A Warning Lights and Barricades	7
	7.14B Unlawful Acts	7

(Continued on next page)

Sec.	Title	Page
7.15	MAINTENANCE OF TRAFFIC	7
7.15A	Division of Responsibility	7
7.15B	Street Closures or Partial Closures	7
7.15C	Notifications	7
7.15D	Existing Traffic Signs and Facilities	7
7.15E	Detours	7
7.15F	Local and Emergency Traffic	7
7.15G	Protection of Pedestrian and Vehicular Traffic	7
7.15H	Restriction of Parking	7
7.15I	Flagmen	7
7.15J	Temporary Barricades	7
7.16	TRAFFIC CONTROL WITHIN AND ABUTTING THE PROJECT	7
7.17	TRAFFIC CONTROL SIGNS	7
7.18	PROCEDURE FOR PROCURING SIGNS	7
7.19	MAINTAINING POSTAL SERVICE	7
7.20	USE OF EXPLOSIVES	7
7.21	RAILROAD CROSSINGS	7
7.22	SANITARY PROVISIONS	7
7.23	USE AND OCCUPANCY PRIOR TO COMPLETION OF CONTRACT	7
7.24	PERSONAL LIABILITY OF PUBLIC OFFICIALS	7
7.25	NO WAIVER OF LEGAL RIGHTS	7

Section 8—Prosecution and Progress

8.01	CONSTRUCTION SCHEDULE	7
8.02	NOTICE TO PROCEED AND PROSECUTION OF THE WORK	8
8.03	SUSPENSION OF WORK	8
8.04	SUSPENSION OF WORK FOR AN EXTENDED PERIOD	8
8.05	TIME FOR COMPLETION	8
8.06	DATE OF COMPLETION OF CONTRACT	8
8.07	UNAVOIDABLE DELAYS	8
8.08	FAILURE TO COMPLETE WORK ON TIME—LIQUIDATED DAMAGES	8
8.09	ASSIGNMENT OF CONTRACT AND SUBLETTING	8
8.10	FORFEITURE OF CONTRACT	8
8.11	CONTRACTOR ORGANIZATION, SUPERINTENDENCE AND EQUIPMENT	8
8.12	INJUNCTIONS	8

Section 9—Measurement and Payment

9.01	MEASUREMENT	8
9.02	SCOPE OF PAYMENT	8
9.03	PAYMENT FOR EXTRA WORK	8
9.04	FORCE ACCOUNT	8
9.05	PAYMENTS AND RETAINED PERCENTAGES	10
9.05A	Payment for Materials Stored on Site	10
9.06	ACCEPTANCE OF CONSTRUCTION	10

(Section Nos. 10 and 11 reserved for possible future use)

DIVISION TWO

STREETS AND RELATED WORK

Section 12—Clearing and Grubbing

12-1	CLEARING	11
12-1.01	DESCRIPTION	11
12-1.02	LIMITS OF CLEARING	11
12-1.02A	Sewers and Water Mains (Clearing and Grubbing)	11
12-1.02B	Streets	11
12-1.03	CONSTRUCTION DETAILS	11
12-1.04	MEASUREMENT	11
12-1.04A	Acreage Basis	11
12-1.04B	Lump Sum Basis	11
12-1.05	PAYMENT	11
12-2	GRUBBING	11
12-2.01	DESCRIPTION	11
12-2.02	LIMITS OF GRUBBING	11
12-2.02A	Sewers	11
12-2.02B	Streets	11
12-2.03	PROTECTION OF EXISTING IMPROVEMENTS DURING GRUBBING OPERATIONS	11
12-2.04	CONSTRUCTION DETAILS	11
12-2.05	MEASUREMENT	11
12-2.06	PAYMENT	11
12-3	CLEARING AND GRUBBING	11
12-3.01	DESCRIPTION	11
12-3.02	CONSTRUCTION DETAILS	11
12-3.03	MEASUREMENT AND PAYMENT	11
12-4	ORNAMENTAL AND DANGER TREES	11
12-4.01	DESCRIPTION	11
12-4.02	MEASUREMENT, ORNAMENTAL AND DANGER TREES	11
12-4.03	PAYMENT	11

Section 13—Street and Drainage Excavation

13-1	DESCRIPTION	12
13-1.01	CLASSIFICATION	12
13-2	PROTECTION OF EXISTING IMPROVEMENTS	12
13-2.01	SURFACE IMPROVEMENTS	12
13-2.02	SUBSURFACE IMPROVEMENTS	12
13-2.02A	General	12
13-2.02B	Lighting Cables	12
13-2.02C	Sewers and Appurtenances	12
13-2.02D	Water Mains and Appurtenances	12
13-2.02E	Private Utilities	12
13-3	CONSTRUCTION DETAILS	12
13-3.01	SIDE STREET, ALLEY AND DRIVEWAY APPROACHES	12
13-3.02	EXCAVATION BELOW GRADE	12
13-3.03	PLANTING AND SIDEWALK AREAS	12
13-3.04	PAVEMENT REMOVAL	12
13-3.05	DISPOSAL OF EXCAVATED MATERIAL	12
13-3.06	DITCHES	12
13-3.07	SELECTED MATERIAL	13
13-3.08	SLIDES	13
13-3.09	OVER EXCAVATION	13
13-3.10	EMBANKMENTS	13
13-3.10A	Foundation Treatment	13
13-3.10A1	Unsuitable Foundation Excavation	13
13-3.10A2	Displacement of Unsuitable Foundation Materials	13
13-3.10A3	Backfilling	13
13-3.10B	Accelerated Subsidence by Vertical Sand Drains	13
13-3.10B1	Vertical Sand Drains Including Backfill	13
13-3.10B2	Sand Drainage Blanket	13
13-3.10C	Embankment Construction	13
13-3.10D	Rock Embankment Construction	14
13-3.10E	Earth Embankment Construction	14
13-3.10E1	Compacting Earth Embankments	14
13-3.10E2	Method A	14
13-3.10E3	Method B	14
13-3.10E4	Method C	14
13-3.10E5	Compaction Control Test	14
13-3.10F	Embankments at Structures, Trestle and Bridge Ends	14
13-3.11	BORROW	14
13-3.12	STRIPPING QUARRIES AND PITS	14
13-3.13	COMPACTING CUT SECTIONS	14
13-3.14	AERATION EQUIPMENT	14
13-3.15	SNOW REMOVAL	14
13-4	MEASUREMENT	14
13-5	PAYMENT	14

Section 14—Haul

14-1	DESCRIPTION	15
14-2	MEASUREMENT	15
14-2.01	HAUL QUANTITIES	15
14-2.02	ROADWAY AND AUXILIARY LANES	15
14-2.03	BORROW OR WASTE	15
14-3	PAYMENT	15

Section 15—Subgrade

15-1	DESCRIPTION	15
15-2	CONSTRUCTION DETAILS	15
15-2.01	SUBGRADE FOR BASE MATERIALS	15
15-2.01A	Compacting Equipment	15
15-2.02	SUBGRADE FOR CEMENT CONCRETE PAVEMENT	15
15-2.03	PROTECTION OF SUBGRADE	16
15-3	MEASUREMENT	16
15-4	PAYMENT	16

Section 16—Water

16-1	DESCRIPTION	16
16-1.01	WATER FOR STREETS	16
16-1.02	WATER FOR TRENCHES	16
16-2	SOURCE OF WATER AND GENERAL REQUIREMENTS	16

(Continued on next page)

Sec.	Title	Page
16-2.01	WATER SUPPLY	16
16-2.02	REQUIREMENTS AND RESPONSIBILITY	16
16-3	CONSTRUCTION DETAILS	16
16-3.01	GENERAL	16
16-3.02	WATER FOR STREETS	16
16-3.03	WATER FOR SETTLING TRENCHES	16
16-3.03A	Jetting	16
16-3.03B	Sluicing	17
16-3.04	WATER FOR SETTLING AROUND CATCH BASINS	17
16-4	MEASUREMENT	17
16-5	PAYMENT	17

Section 17—Excavation for Structures

17-1	DESCRIPTION	17
17-1.01	CLASSIFICATION	17
17-3	CONSTRUCTION DETAILS	17
17-3.01	PRESERVATION OF CHANNEL	17
17-3.02	EXCAVATION IN OPEN PITS	17
17-3.03	DEPTH OF FOOTINGS	17
17-3.04	PREPARATION FOR PLACING FOUNDATIONS	17
17-3.05	SHORING, CRIBS AND COFFERDAMS	17
17-3.06	PUMPING	17
17-3.07	INSPECTION	17
17-3.08	DISPOSAL OF EXCAVATED MATERIAL	17
17-3.09	BACKFILLING	17
17-3.10	APPROACH EMBANKMENT	17
17-4	MEASUREMENT	17
17-5	PAYMENT	17
17-5.01	STRUCTURE EXCAVATION	17
17-5.02	SHORING AND CRIBS	17
17-5.03	MECHANICAL TAMPERS	17

(Section Nos. 18, 19 & 20 reserved for possible future use)

Section 21—Weighing Equipment

21-1	DESCRIPTION	17
21-1.01	WEIGHING EQUIPMENT FOR AGGREGATES AND ROAD MATERIALS FROM BUNKERS	17
21-1.02	UNDERWEIGHTS	17
21-1.03	WEIGHING EQUIPMENT OR AGGREGATES AND ROAD MATERIALS FROM LOCAL DEPOSITS AND STOCKPILES	17
21-1.04	WEIGHING EQUIPMENT FOR BULK PORTLAND CEMENT	17
21-2	PAYMENT	17

Section 22—Production from Quarry and Pit Sites

22-1	DESCRIPTION	17
22-2	MATERIALS	18
22-3	CONSTRUCTION DETAILS	18
22-3.01	ACQUISITION OF SITES	18
22-3.02	PREPARATION OF SITE	18
22-3.03	PRODUCTION	18
22-3.04	FINAL CLEANUP	18
22-4	PAYMENT	18

Section 23—Crushed Surfacing, Ballasting and Stockpiling

23-1	DESCRIPTION	18
23-2	MATERIALS	18
23-2.01	CRUSHED SURFACING	18
23-2.02	BALLAST	18
23-3	CONSTRUCTION DETAILS	18
23-3.01	STOCKPILING SURFACING MATERIAL	18
23-2.02	SUBGRADE	18
23-3.03	SHOULDERS	18
23-3.04	DEPTH OF LAYERS	18
23-3.05	SPREADING MATERIALS	18
23-3.06	ROLLING	18
23-3.07	LOADING AGGREGATE FROM STOCKPILE	18
23-3.08	HAULING	18
23-3.09	CORRECTION OF SURFACE DEFECTS	18
23-3.10	FLOATING OR LOOSE STONE	18
23-3.11	HOURS OF WORK	18
23-3.12	UNFAVORABLE WEATHER	18
23-3.13	PATROLLING	18
23-3.14	EQUIPMENT	18
23-3.15	WATER	18
23-3.16	CONSTRUCTION OF COURSES	18
23-3.16A	Ballast	18
23-3.16B	Base Course	18
23-3.16C	Top Course	18
23-3.16D	Maintenance Rock	18
23-3.17	RESURFACING	18
23-3.18	REMOVING AND REPLACING SURFACING MATERIAL	18
23-3.19	FINAL CLEANING UP	18
23-3.20	MAINTENANCE DURING SUSPENSION OF WORK PERIOD	18
23-3.21	APPLICATION OF DUST PALLIATIVE OIL	18
23-4	MEASUREMENT	18
23-5	PAYMENT	19

Section 24—Filler

24-1	DESCRIPTION	19
24-2	MATERIALS	19
24-2.01	SAND FILLER	19
24-2.02	CRUSHED FILLER	19
24-3	CONSTRUCTION DETAILS	19
24-4	MEASUREMENT	19
24-5	PAYMENT	19

Section 25—Screened Gravel Surfacing—One Course

25-1	DESCRIPTION	19
25-2	MATERIALS	19
25-3	CONSTRUCTION DETAILS	19
25-4	MEASUREMENT	19
25-5	PAYMENT	19

Section 26—Bank Run Gravel, Mineral Aggregates for Streets

26-1	DESCRIPTION	19
26-1.01	MINERAL AGGREGATES	19
26-2	MATERIAL	19
26-2.01	CLASSES AND GRADING OF BANK RUN GRAVEL	19
26-2.02	BANK RUN GRAVEL FROM SPECIFIED SOURCES	19
26-2.03	BANK RUN GRAVEL FROM SOURCES PROVIDED BY THE CONTRACTOR	19
26-3	CONSTRUCTION DETAILS	19
26-3.01	REMOVAL OF OVERBURDEN	19
26-3.02	PREPARATION OF ROADBED	19
26-3.03	CONSTRUCTION OF COURSES	19
26-3.04	PIT OPERATIONS	19
26-3.05	MINERAL AGGREGATES	19
26-4	MEASUREMENT	20
26-5	PAYMENT	20

Section 27—Asphalt Materials

27-1	DESCRIPTION	21
27-1.01	ASPHALT MATERIAL	21
27-1.01A	Slow Curing Liquid Asphalt	21
27-1.01B	Medium Curing Liquid Asphalt	21
27-1.01C	Rapid Curing Liquid Asphalt	21
27-1.01C1	Alternate Viscosity Requirements	21
27-1.01D	Paving Asphalts	21
27-1.01E	Asphalt for Sub-sealing and Crack Pouring	21
27-1.01F	Emulsified Asphalt	21
27-1.01G	Test Methods	21
27-1.01H	Change in Grades	21
27-1.01I	Notice of Shipment	21
27-1.01J	Samples	21
27-1.01K	Basis of Measurement	21
27-1.01L	Temperature of Application	21
27-1.01M	Unauthorized Grades	21
27-1.01N	Anti-Stripping Additive	21

(Section Nos. 28, 29, 30 and 31 reserved for possible future use)

Section 32—Bituminous Surface Treatment

Sec.	Title	Page
32-1	DESCRIPTION	21
32-2	MATERIALS	21
32-2.01	ASPHALT	21
32-2.02	MINERAL AGGREGATE	21
	32-2.02A General Requirements	21
	32-2.02B Test Requirements	21
32-3	CONSTRUCTION DETAILS	21
32-3.01	PREPARATION OF UNTREATED ROADWAY	21
32-3.02	FIRST APPLICATION OF ASPHALT	21
32-3.03	SECOND APPLICATION OF ASPHALT	21
32-3.04	ADDITIONAL ASPHALT AND MINERAL AGGREGATE	21
32-3.05	PATCHING	21
32-3.06	CORRECTION OF DEFECTS	21
32-3.07	PROTECTION OF STRUCTURES	21
32-3.08	UNFAVORABLE WEATHER	21
32-3.09	MAINTENANCE	21
32-3.10	PROGRESS OF WORK	21
32-3.11	ORGANIZATION AND EQUIPMENT	21
32-3.12	TRAFFIC AND DETOURS	21
32-3.13	FINISHING AND CLEANUP	21
32-4	MEASUREMENT AND PAYMENT	21
32-4.01	PREPARATION OF UNTREATED ROADWAY	21
32-4.02	ASPHALT	21
32-4.03	CRUSHED STONE SURFACING AND CRUSHED COVER STONE	21
32-4.04	WATER	21
32-4.05	REMOVAL OF EXCESS SURFACING MATERIAL	21
32-4.06	FINISHING AND CLEANUP	21
32-4.07	INCIDENTAL WORK	21

Section 33—Bituminous Plant Mix Pavement

Sec.	Title	Page
33-1	DESCRIPTION	21
33-2	MATERIALS	21
33-2.01	ASPHALT	21
33-2.02	MINERAL AGGREGATE	21
	33-2.02A General Requirements	21
	33-2.02B Test Requirements	21
	33-2.02C Grading of Mineral Aggregate	21
	33-2.02D Proportions of Materials	21
	33-2.02E Stockpiling Mineral Aggregates	22
33-3	CONSTRUCTION DETAILS	22
33-3.01	PREPARATION OF BASE OR SUBGRADE	22
	33-3.01A Preparation of Asphalt, Concrete or Brick Surfaces	22
	33-3.01B Preparation of Untreated Roadway	22
	33-3.01C Removing Existing Pavement	22
33-3.02	CONNECTIONS WITH EXISTING FACILITIES	22
33-3.03	PREPARATION AND HEATING AGGREGATES	22
	33-3.03A Operation of Asphalt Plant	22
	33-3.03B Plant Capacity	22
33-3.04	HEATING ASPHALT	22
33-3.05	PROPORTIONING	22
33-3.06	MIXING	22
33-3.07	HAULING	22
33-3.08	SPREADING AND FINISHING	22
33-3.09	COMPACTING	22
33-3.10	PRELEVELING FOR BITUMINOUS PLANT MIX	22
33-3.11	CONSTRUCTION OF COURSES	22
33-3.12	JOINTS	22
33-3.13	ADJUSTMENT OF EXISTING CASTINGS TO FINISH GRADE	22
33-3.14	SURFACE SMOOTHNESS	22
33-3.15	HEATER-PLANING BITUMINOUS PAVEMENT	22
	33-3.15A General	22
	33-3.15B Equipment	22
33-3.16	MISCELLANEOUS DETAILS OF CONSTRUCTION	22
33-3.17	SAMPLES	22
33-3.18	FINISHING AND CLEANUP	22
33-3.19	UNFAVORABLE WEATHER	22
33-3.20	MAINTENANCE OF TRAFFIC AND TRAFFIC SIGNS	22
33-3.21	ORGANIZATION AND EQUIPMENT	23
33-4	MEASUREMENT AND PAYMENT	23
33-4.01	PREPARATION OF UNTREATED ROADWAY	23
33-4.02	ASPHALT PRIME COAT	23
33-4.03	PRIME COAT AGGREGATE	23
33-4.04	ASPHALT FOR TACK COAT	23
33-4.05	BITUMINOUS PLANT MIX	23
33-4.06	MINERAL AGGREGATES IN STOCKPILE	23
33-4.07	BLENDING SAND	23
33-4.08	WATER	23
33-4.09	FINISHING AND CLEANUP	23
33-4.10	REMOVING EXISTING PAVEMENT	23
33-4.11	CHIPPING EXISTING ASPHALT SURFACE	23
33-4.12	INCIDENTAL WORK	23
33-4.13	HEATER PLANING BITUMINOUS PAVEMENT	23

Section 34—Asphalt Concrete Pavement

Sec.	Title	Page
34-1	DESCRIPTION	23
34-2	MATERIALS	23
34-2.01	ASPHALT	23
34-2.02	MINERAL AGGREGATE	23
	34-2.02A General Requirements	23
	34-2.02B Test Requirements	23
	34-2.02C Grading of Mineral Aggregate	24
	34-2.02D Mineral Filler	24
	34-2.02E Blending Sand	24
34-2.03	PROPORTIONS OF BLENDING MATERIALS	24
34-2.04	STOCKPILING MINERAL AGGREGATES	24
34-3	CONSTRUCTION DETAILS	24
34-3.01	PREPARATION OF BASE OR SUBGRADE	24
	34-3.01A Preparation of Asphalt, Concrete or Brick Surfaces	25
	34-3.01B Preparation of Untreated Roadway	25
	34-3.01C Removing Existing Pavement	25
34-3.02	CONNECTIONS WITH EXISTING FACILITIES	25
34-3.03	PREPARATION AND HEATING AGGREGATES	25
	34-3.03A Operation of Asphalt Plant	25
	34-3.03B Plant Capacity	25
34-3.04	HEATING ASPHALT	25
34-3.05	PROPORTIONING	25
34-3.06	MIXING	25
34-3.07	HAULING	25
34-3.08	SPREADING AND FINISHING	25
34-3.09	COMPACTING	25
34-3.10	PRELEVELING FOR ASPHALT CONCRETE SURFACING	25
34-3.11	CONSTRUCTION OF COURSES	25
34-3.12	JOINTS	25
34-3.13	ADJUSTMENT OF EXISTING CASTINGS TO FINISH GRADE	25
34-3.14	SURFACE SMOOTHNESS	26
34-3.15	HEATER-PLANING BITUMINOUS PAVEMENT	26
	34-3.15A General	26
	34-3.15B Equipment	26
34-3.16	MISCELLANEOUS DETAILS OF CONSTRUCTION	26
34-3.17	SAMPLES	26
34-3.18	FINISHING AND CLEANUP	26
34-3.19	UNFAVORABLE WEATHER	26
34-3.20	MAINTENANCE OF TRAFFIC AND TRAFFIC SIGNS	26
34-3.21	ORGANIZATION AND EQUIPMENT	26
34-4	MEASUREMENT AND PAYMENT	26
34-4.01	PREPARATION OF UNTREATED ROADWAY	26
34-4.02	ASPHALT—PRIME COAT	26
34-4.03	PRIME COAT AGGREGATE	26
34-4.04	ASPHALT FOR TACK COAT	26
34-4.05	ASPHALT CONCRETE PAVEMENT	26
34-4.06	MINERAL AGGREGATES IN STOCKPILE	26
34-4.07	BLENDING SAND	26
34-4.08	FURNISHING MINERAL FILLER	26
34-4.09	WATER	26
34-4.10	FINISHING AND CLEANUP	26
34-4.11	REMOVING EXISTING PAVEMENT	26
34-4.12	HEATER-PLANING BITUMINOUS PAVEMENT	26
34-4.13	CHIPPING EXISTING ASPHALT SURFACE	26
34-4.14	INCIDENTAL WORK	26

Section 35—Extruded Asphalt Concrete Curb

Sec.	Title	Page
35-1	DESCRIPTION	26
35-2	MATERIALS	26
35-3	CONSTRUCTION DETAILS	26
35-3.01	EQUIPMENT FOR LAYING CURB	26
35-3.02	MIXING AND PLACING	26
35-3.03	JOINTS	26
35-3.04	CURING	26
35-3.05	FURTHER PROVISIONS	26
35-4	MEASUREMENT AND PAYMENT	26

Section 36—Beam Guard Rail

Sec.	Title	Page
36-1	DESCRIPTION	27
36-2	MATERIALS	27
36-2.01	RAIL ELEMENT	27
	36-2.01A Inspection	27
36-2.02	POSTS	27
	36-2.02A Treated Timber Posts	27
	36-2.02B Precast Concrete Posts	27
	36-2.02B1 Finish	27
	36-2.02B2 Strength Requirements	28
	36-2.02B3 Testing	28
36-2.03	GALVANIZING	28
36-2.04	HARDWARE	28
36-3	CONSTRUCTION DETAILS	28
36-3.01	ERECTION OF POSTS	28
36-3.02	PAINTING	28
36-3.03	ERECTION OF RAIL	28
36-3.04	PLANS	28
36-4	MEASUREMENT	28
36-5	PAYMENT	28

(Section No. 37 reserved for possible future use)

Section 38—Cement Concrete Stairways and Landings

Sec.	Title	Page
38-1	DESCRIPTION	28
38-2	MATERIALS	28
38-3	CONSTRUCTION DETAILS	28
38-3.01	SITE PREPARATION AND GRADING	28
38-3.02	SUBGRADE PREPARATION AND FORMS	28
38-3.03	REINFORCING STEEL	29
38-3.04	RAILINGS	29
38-3.05	PLACING CONCRETE, FINISHING AND CURING	29
38-4	MEASUREMENT	29
38-5	PAYMENT	29
38-5.01	EXCAVATION FOR GRADING	29
38-5.02	CEMENT CONCRETE STAIRWAY	29
38-5.03	CEMENT CONCRETE STAIRWAY LANDINGS	29
38-5.04	STAIRWAY STEEL PIPE RAILING	29
38-5.05	COMPACTION EQUIPMENT	29
38-5.06	INCIDENTAL WORK	29

Section 39—Cement Concrete Pavement

Sec.	Title	Page
39-1	DESCRIPTION	29
39-2	MATERIALS	29
39-2.01	CEMENT	29
	39-2.01A General Requirements	29
	39-2.01B Storage on the Work	29
	39-2.01C Sampling and Acceptance	29
	39-2.01D Portland Cement	29
	39-2.01E Air-Entraining Portland Cement	30
	39-2.01F High-early-Strength Cement	30
	39-2.01G Low-alkali Cement	30
39-2.02	CONCRETE AGGREGATES	30
	39-2.02A General Requirements	30
	39-2.02B Fine Aggregate	30
	39-2.02B1 Deleterious Substances	30
	39-2.02B2 Grading	30
	39-2.02B3 Use of Substandard Gradings	30
	39-2.02B4 Mortar Strength	30
	39-2.02C Coarse Aggregate	30
	39-2.02C1 Deleterious Substances	30
	39-2.02C2 Wear in Los Angeles Machine	30
	39-2.02C3 Grading	30
	39-2.02C4 Use of Substandard Gradings	30
	39-2.02C5 Concrete Strength	30
	39-2.02D Test Methods for Concrete Aggregates	30
	39-2.02D1 Sampling: ASTM Designation D 75	30
	39-2.02D2 Amount of Material Finer than No. 200 Sieve in Aggregates: ASTM Designation C 117	30
	39-2.02D3 Organic Impurities: ASTM Designation C 40	30
	39-2.02D4 Compressive Strength of Concrete: ASTM Designation C 39	30
	39-2.02D5 Flexural Strength of Concrete: ASTM Designation C 78	30
	39-2.02D6 Percentage of Particles of Less than 1.95 Specific Gravity: AASHO T 150	30
	39-2.02D7 Clay Lumps in Aggregates: ASTM Designation C 142	30
	39-2.02D8 Abrasion of Coarse Aggregate by Use of the Los Angeles Machine: ASTM Designation C 131	30
	39-2.02D9 Mortar Strength: Compressive Strength of Concrete Mortars, ASTM Designation C 109	30
39-2.03	MIXING WATER	30
	39-2.03A Requirements	31
	39-2.03B Test Methods	31
39-2.04	REINFORCING STEEL	31
	39-2.04A Deformed Steel Bars	31
	39-2.04B Wire Mesh	31
	39-2.04C Cold Drawn Wire	31
39-2.05	TIE BARS	31
39-2.06	PREMOLDED JOINT FILLER	31
	39-2.06A Contraction and Longitudinal Joints	31
	39-2.06B Expansion (Through) Joints	31
39-2.07	COTTON MATS	31
39-2.08	WHITE PIGMENTED CURING COMPOUNDS	31
39-2.09	TRANSPARENT CURING COMPOUNDS	31
39-2.10	WATERPROOF PAPER	31
39-2.11	WHITE POLYETHYLENE SHEETING	31
39-2.12	FORMS	31
	39-2.12A Wood Forms	31
	39-2.12B Metal Forms	31
39-2.13	JOINT-SEALANTS	31
39-3	CONSTRUCTION-CONCRETE MIXES	31
39-3.01	CLASSIFICATION OF CONCRETE MIXES	31
	39-3.01A Cement Content for Designed Age Requirements	31
39-3.02	AIR-ENTRAINED CONCRETE	31
39-3.03	MEASURING OF MATERIALS	32
	39-3.03A Aggregates	32
	39-3.03B Cement	32
	39-3.03C Water	32
	39-3.03C1 Water Cement Ratio	32
	39-3.03C2 Water Measuring Equipment	32
39-3.04	PROPORTIONING MATERIALS	32
39-3.05	TRANSPORTING MATERIALS	32
39-3.06	CONSISTENCY OF CONCRETE	33
39-3.07	CONCRETE MIXED AT ROAD SITE	33
39-3.08	READY MIXED CONCRETE	33
39-3.09	BATCH METERS	33
39-3.10	RETEMPERING	33
39-3.11	REMIXING CONCRETE	33
39-3.12	SUBGRADE	33
	39-3.12A Extra Concrete for Thickened Edges	33
39-3.13	FORMS	33
	39-3.13A Wood Forms	33
	39-3.13B Metal Forms	33
39-3.14	COMPACTION, SUBGRADE BEFORE PLACING CONCRETE	33
39-3.15	PLACING, COMPACTING AND FINISHING	33
	39-3.15A Placing Concrete at Expansion Joints	34
	39-3.15B Placing Concrete With Reinforcing Steel Bars or Wire Mesh	34
39-3.16	COMPACTING CONCRETE	34
	39-3.16A Hand Compacting	34
	39-3.16B Machine Compacting	34
	39-3.16C Combined Vibration and Machine Compacting	34
39-3.17	WATER	34
39-3.18	JOINTS	34
	39-3.18A Formed Transverse Contraction Joints	35
	39-3.18B Construction of Formed Contraction Joints	35
	39-3.18C Sawed Contraction Joints	35
	39-3.18D Transverse Construction = Joints	35
	39-3.18E Transverse Expansion Joints	35
	39-3.18F Sealing Expansion Joints	35
	39-3.18G Longitudinal Contraction Joints	35
	39-3.18H Standard Location for Longitudinal Joints	35
	39-3.18I Longitudinal Expansion Joints	35
39-3.19	FINISHING CONCRETE	35
	39-3.19A Hand Finish	35
	39-3.19B Machine Finish	35
	39-3.19C Edging	35
	39-3.19D Final Finish	35
	39-3.19E Surface Smoothness	35
39-3.20	CURING AND PROTECTION	35
	39-3.20A Sprinkling System	35
	39-3.20B Saturated Mats	35
	39-3.20C Waterproof Paper	35

(Continued on next page)

Sec.	Title	Page
39-3.20D	White Polyethylene Sheeting	35
39-3.20E	White Liquid Membrane Curing Compound	35
39-3.20F	Transparent Liquid Curing Compound	35
39-3.20G	Emulsified Asphalt	35
39-3.20H	Curing in Hot Weather	35
39-3.21	COLD WEATHER WORK	35
39-3.22	CONCRETE PAVEMENT CONSTRUCTION IN SINGLE LANE	35
39-3.23	CONCRETE BASE PAVEMENT	36
39-3.24	VIBRATING SCREED CONCRETE PAVEMENT CONSTRUCTION	36
39-3.24A	Materials	36
39-3.24B	Construction Details	36
39-3.25	TEMPORARY TRAFFIC CROSSINGS AT NEW PAVEMENTS	36
39-3.26	BARRICADES AND SAFEGUARDS	36
39-3.27	OPENING PAVEMENTS TO TRAFFIC	36
39-3.28	CLEANUP	36
39-3.29	CEMENT CONCRETE ALLEY PAVEMENT	36
39-3.29A	Integral Inverted Alley Pavement Edge Wall	36
39-3.29B	Extra Concrete for Alley Approach Ramp	36
39-4	MEASUREMENT AND PAYMENT	36
39-4.01	CEMENT CONCRETE PAVEMENT	36
39-4.02	EXTRA CONCRETE FOR THICKENED EDGE	36
39-4.03	STEEL REINFORCING BARS	36
39-4.04	SAWING CONTRACTION CONTROL JOINTS	36
39-4.05	EXTRA FOR FURNISHING HIGH-EARLY-STRENGTH CEMENT	36
39-4.06	TEMPORARY PAVEMENT CROSSINGS	36
39-4.07	COMPACTING EQUIPMENT	36
39-4.08	FORMED CONTRACTION JOINTS	36

Section 40—Cement Concrete Curb, Curb and Gutter

40-1	DESCRIPTION	37
40-1.01	CLASSIFICATION	37
40-1.02	CEMENT CONCRETE CURBS	37
40-1.02A	Curb, Type 108C and Type 110C	37
40-1.02B	Low Curb, Type 109	37
40-1.02C	Separate Curb	37
40-1.02D	Transitional Curb	37
40-1.03	CURB AND GUTTER	37
40-2	MATERIALS AND FORMS	37
40-2.01	CONCRETE	37
40-2.02	REINFORCING STEEL AND STEEL DOWELS	37
40-2.03	PREFORMED EXPANSION AND DUMMY JOINT FILLER	37
40-2.04	CURING COMPOUNDS	37
40-2.05	FORMS	37
40-2.05A	Wood Forms	37
40-2.05B	Steel Forms	37
40-3	CONSTRUCTION DETAILS	37
40-3.01	CURBS	37
40-3.01A	Erecting Forms	37
40-3.01B	Placing Concrete	37
40-3.01C	Dowels and Keyways	37
40-3.01D	Stripping Forms and Finishing	37
40-3.01E	Curing	38
40-3.01F	Expansion and Contraction Joints	38
40-3.01G	Curb Drains	38
40-3.01H	Finished Work	38
40-3.02	CURB, INTEGRAL AND DOWELED CONSTRUCTION	38
40-3.02A	Construction Integral with Pavement	38
40-3.02B	Delayed Construction as Doweled Curb	38
40-3.03	LOW CURB, TYPE 109B and 109C	38
40-3.04	CURBS, SEPARATE TYPE	38
40-3.05	TRANSITIONAL CURB	38
40-3.06	CURB AND GUTTER	38
40-4	MEASUREMENT AND PAYMENT	38

Section 41—Cement Concrete Driveways

41-1	DESCRIPTION	39
41-1.01	CLASSIFICATION AND USAGE	39
41-1.01A	Cement Concrete Driveway, Type 105	39
41-1.01B	Cement Concrete Driveway, Type 106	39
41-1.01C	Cement Concrete Driveway, Type 107	39
41-1.01D	Cement Concrete Driveway, Type D	39
41-1.01E	Cement Concrete Driveway, Alley Return, Type A	39
41-1.01F	Cement Concrete Driveway, Alley Return, Type B	39
41-2	MATERIALS	39

Sec.	Title	Page
41-3	CONSTRUCTION DETAILS	39
41-3.01	GENERAL REQUIREMENTS	39
41-3.02	EXCAVATION, SUBGRADE PREPARATION AND FORMS	39
41-3.03	PLACING CONCRETE, CONSOLIDATION AND FINISHING	39
41-3.04	CURING AND PROTECTION	39
41-4	MEASUREMENT	39
41-5	PAYMENT	39

Section 42—Cement Concrete Sidewalks

42-1	DESCRIPTION	40
42-2	MATERIALS	40
42-3	CONSTRUCTION MATERIALS	40
42-3.01	EXCAVATION AND SUBGRADE	40
42-3.02	FORMS AND FINE GRADING	40
42-3.03	PLACING, CONSOLIDATING AND FINISHING	40
42-3.04	CURING AND PROTECTION	40
42-3.05	SIDEWALK DRAINS	40
42-3.06	EXPANSION AND CONTRACTION JOINTS	40
42-4	MEASUREMENT	41
42-5	PAYMENT	41

Section 43—Cement Concrete Combined Sidewalk, Curb and Gutter

43-1	DESCRIPTION	41
43-2	MATERIALS	41
43-3	CONSTRUCTION DETAILS	41
43-3.01	GENERAL	41
43-3.02	EXCAVATION AND SUBGRADE	41
43-3.03	FORMS AND FINE GRADING	41
43-3.04	PLACING AND FINISHING CONCRETE	41
43-3.05	DOWELS AND KEYWAYS	41
43-3.06	STRIPPING FORMS AND FINISHING	41
43-3.07	CURING AND PROTECTION	41
43-4	MEASUREMENT	41
43-5	PAYMENT	41

Section 44—Precast Concrete Traffic Curb, Type 123, Traffic Buttons, and Extruded Traffic Curb

44-1	DESCRIPTION	41
44-2	MATERIALS	41
44-2.01	PRECAST TRAFFIC CURB, TYPE 123, AND TRAFFIC BUTTONS	41
44-2.02	TRAFFIC BUTTONS, PRECAST CONCRETE AND ALUMINUM COVERED	41
44-2.03	EXTRUDED TRAFFIC CURB	41
44-3	CONSTRUCTION DETAILS	41
44-3.01	PRECAST CONCRETE TRAFFIC CURB AND TRAFFIC BUTTONS	41
44-3.01A	Manufacture	41
44-3.01A1	Proportioning	41
44-3.01A2	Mixing	41
44-3.01A3	Forms	41
44-3.01A4	Placing Concrete	41
44-3.01A5	Removal of Forms	41
44-3.01A6	Curing Concrete	41
44-3.01A7	Finish	41
44-3.01A8	Surface Treatment	41
44-3.01A9	Dimensions and Shape	42
44-3.01A10	Curb Lengths	42
44-3.01A11	Defective Curb	42
44-3.01A12	Repairing Curb	42
44-3.01A13	Identification Marking	42
44-3.01A14	Shipping	42
44-3.01A15	Samples	42
44-3.01A16	Inspection at Plant	42
44-3.01B	Installation of Curbs	42
44-3.01B1	Nosings	42
44-3.01B2	Joints	42
44-3.01B3	Bedding	42
44-3.01B4	Alignment	42
44-3.01B5	Cleaning Pavement	42
44-3.01B6	Sodium Metasilicate	42
44-3.01B7	Layout Design	42
44-3.01C	Installation of Buttons	42

(Continued on next page)

Sec.	Title	Page
44-3.02	EXTRUDED TRAFFIC CURB	42
44-3.02A	Joints in Extruded Curb	42
44-4	MEASUREMENT	42
44-5	PAYMENT	42

Section 45—Block Precast Traffic Curb, Type 124

45-1	DESCRIPTION	42
45-2	MATERIALS	42
45-3	CONSTRUCTION DETAILS	42
45-3.01	INSTALLATION	42
45-4	MEASUREMENT	42
45-5	PAYMENT	42

Section 46—Illuminated Terminal Nosing

46-1	DESCRIPTION	42
46-1.01	REGULATIONS AND CODE	42
46-1.02	INDUSTRY CODES AND STANDARDS	42
46-2	MATERIALS	43
46-2.01	GENERAL	43
46-2.02	INSPECTION	43
46-2.03	TERMINAL NOSE CASTING	43
46-2.04	CONDUIT	43
46-2.05	PULL BOXES, JUNCTION BOXES	43
46-3	CONSTRUCTION DETAILS	43
46-3.01	GENERAL	43
46-3.02	EXCAVATION AND BACKFILLING	43
46-3.03	REMOVING AND REPLACING IMPROVEMENTS	43
46-3.04	CONDUIT	43
46-3.05	LOCATION, PULL AND JUNCTION BOXES	43
46-4	MEASUREMENT AND PAYMENT	43

Section 47—Erosion Control

47-1	DESCRIPTION	43
47-2	MATERIALS	43
47-2.01	TOP SOIL	43
47-2.02	SEED	43
47-2.03	FERTILIZER	43
47-2.04	MULCH	43
47-2.04A	Hay	43
47-2.04B	Wood Cellulose Fiber	43
47-2.05	ASPHALT EMULSION	44
47-2.06	JUTE MATTING	44
47-3	CONSTRUCTION DETAILS	44
47-3.01	PREPARATION	44
47-3.02	PLACEMENT OF SOIL	44
47-3.03	COMPACTION	44
47-3.04	SEEDING AND FERTILIZING	44
47-3.05	SPREADING MULCH	44
47-3.05A	Hay	44
47-3.05B	Wood Cellulose Fiber	44
47-3.06	APPLICATION OF ASPHALT EMULSION	45
47-3.07	PLACING JUTE MATTING	45
47-3.08	CONTRACTOR'S RESPONSIBILITY FOR WORK	45
47-3.09	FINAL INSPECTION AND ACCEPTANCE	45
47-4	MEASUREMENT	45
47-4.01	TOP SOIL	45
47-4.02	SEEDING AND FERTILIZING	45
47-4.03	MULCHING	45
47-4.04	JUTE MATTING	45
47-4.05	SOIL CONDITIONERS	45
47-5	PAYMENT	45
47-5.01	TOP SOIL	45
47-5.02	SEED AND FERTILIZER	45
47-5.03	MULCHING	45
47-5.04	JUTE MATTING	45
47-5.05	WATER	45
47-5.06	SOIL CONDITIONERS	45

Section 48—Roadside Planting

48-1	DESCRIPTION	45
48-2	MATERIALS	45
48-2.01	NOMENCLATURE	45
48-2.02	QUALITY OF PLANT MATERIAL	46
48-2.03	HANDLING AND SHIPPING	46
48-2.04	TAGGING PLANT MATERIAL	46
48-2.05	INSPECTION OF PLANT MATERIAL	46
48-2.06	SUBSTITUTION OF PLANTS	46
48-2.07	TEMPORARY STORAGE	46
48-2.08	TOP SOIL	46
48-3	CONSTRUCTION DETAILS	46
48-3.01	LAYOUT OF PLANTING	46
48-3.02	ORDER OF PLANTING	46
48-3.03	PLANTING	46
48-3.04	PRUNING, STAKING AND GUYING	47
48-3.05	CULTIVATION AND CLEANUP	47
48-3.06	FERTILIZERS AND SOIL CONDITIONERS	47
48-3.07	SAWDUST MULCH	47
48-3.08	CARING DURING CONSTRUCTION	47
48-3.09	PROTECTION OF EXISTING FACILITIES	47
48-3.10	REPLACEMENT	47
48-5	MEASUREMENT AND PAYMENT	47

Section 49—Sprinkler Irrigation System

49-1	DESCRIPTION	48
49-2	MATERIALS	48
49-2.01	PIPE AND FITTINGS	48
49-2.02	CONTROL TUBING	48
49-2.03	AUTOMATIC CONTROLLERS	48
49-2.04	SPRINKLER HEADS	48
49-2.05	VALVE PROTECTIVE SLEEVES	48
49-2.06	GATE VALVES	48
49-2.07	CONTROL VALVES	48
49-2.08	QUICK COUPLER VALVES	48
49-2.09	DRAIN VALVES	48
49-2.10	HOSE BIBS	48
49-2.11	VACUUM BREAKERS	49
49-2.11A	Atmospheric Vacuum Breakers	49
49-2.11B	Pressure Vacuum Breakers	49
49-3	CONSTRUCTION DETAILS	49
49-3.01	EXCAVATION	49
49-3.02	EXCAVATION ADJACENT TO TREES	49
49-3.03	PIPING	49
49-3.04	JOINTING	49
49-3.05	CONTROL TUBING	49
49-3.06	INSTALLATION	49
49-3.07	CONTROL TUBING INSTALLATION	49
49-3.08	FLUSHING AND TESTING	49
49-3.09	ADJUSTING SYSTEM	50
49-3.10	BACKFILL	50
49-5	MEASURE AND PAYMENT	50

Section 50—Monuments

50-1	DESCRIPTION	50
50-2	MATERIALS	50
50-3	CONSTRUCTION DETAILS	50
50-3.01	REFERENCE POINTS	50
50-3.02	PRECAST CONCRETE MONUMENTS	50
50-3.03	POURED MONUMENT	50
50-3.04	MONUMENTS ON CEMENT CONCRETE PAVING PROJECTS	50
50-3.05	FURNISHING AND PLACING MONUMENT CASTINGS	50
50-3.06	ADJUSTMENT OF EXISTING MONUMENT CASTINGS TO GRADE	50
50-4	MEASUREMENT AND PAYMENT	50

Section 51—Sidewalk Drain for Building Downspout

51-1	DESCRIPTION	50
51-2	MATERIALS	50
51-3	CONSTRUCTION DETAILS	50
51-3.01	GENERAL	50
51-4	MEASUREMENT AND PAYMENT	50
51-4.01	MEASUREMENT	50
51.5	PAYMENT	50

Section 52—Removal of Existing Street Improvements

52-1	DESCRIPTION	50
52-2	CONSTRUCTION DETAILS	50
52-2.01	GENERAL	50

(Continued on next page)

Sec.	Title	Page
52-2.02	REMOVAL OF CURBS	50
	52-2.02A Cement Concrete Curbs, Types A, B and C	50
	52.202B Other Types of Curbs	51
52-2.03	REMOVAL OF PAVEMENT	51
	52-2.03A Classification of Existing Pavement Removal	51
	52-2.03A1 Pavement Removal, Class A	51
	52-2.03A2 Pavement Removal, Class AA	51
	52-2.03A3 Pavement Removal, Class B	51
	52-2.03A4 Pavement Removal, Class C	51
	52-2.03A5 Pavement Removal, Class D	51
52-2.04	REMOVAL OF CEMENT CONCRETE SIDEWALKS	51
52-2.05	REMOVAL OF CURB AND GUTTER	51
52-2.06	REMOVAL OF ASPHALT CONCRETE PAVEMENT	51
52-2.07	REMOVAL OF CATCH BASINS, MANHOLES, CURB INLETS, SUMPS, ETC.	51
52-2.08	SALVAGE	51
52-2.09	WASTE DISPOSAL	51
52-3	MEASUREMENT AND PAYMENT	51

Section 53—Adjustment of New and Existing Utility Structures to Finish Grade

53-1	DESCRIPTION	52
53-2	DIVISION OF RESPONSIBILITY	52
53-2.01	PRIVATELY OWNED UTILITY STRUCTURES	52
53-2.02	PUBLICLY OWNED UTILITY STRUCTURES	52
53-2.03	CONTRACTOR TO SCHEDULE WORK	52
53-3	CONSTRUCTION DETAILS	52
53-3.01	ADJUSTMENT OF MANHOLES, CATCH BASINS AND SIMILAR STRUCTURES	52
	53.301A General	52
	53-3.01B Unpaved Street Grading Projects	52
	53-3.01C Cement Concrete Paving Projects	52
	53-3.01D Asphalt Concrete Paving Projects	52
	53-3.01E Asphalt Resurfacing Projects	52
	53-3.01F Storm and Sanitary Sewer or Water Projects	52
	53-3.01G Establishment of Grade for Top of Manhole	53
53-3.02	ADJUSTMENT OF INLETS	53
53-3.03	ADJUSTMENT OF MONUMENTS AND CAST IRON FRAME AND COVER	53
53-3.04	ADJUSTMENT OF VALVE BOX CASTINGS	53
53-3.05	FURNISHING CASTINGS	53
53-4	MEASUREMENT AND PAYMENT	53
53-4.01	ADJUST EXISTING MANHOLE, CATCH BASIN AND GATE VALVE CHAMBER TO GRADE	53
53-4.02	ADJUST EXISTING INLET TO GRADE	53
53-4.03	ADJUSTING EXISTING MOUNMENT FRAME AND COVER TO GRADE	53
53-4.04	ADJUST EXISTING VALVE BOX TO GRADE	53
53-4.05	SHAFTING	53
53-4.06	TYPE ( ) INLET IN PLACE	53
53-4.07	FURNISHING CASTINGS	53
53-4.08	ASPHALT CONCRETE	53
53-4.09	INCIDENTAL WORK	53

Section 54—Pavement Patching

54-1	DESCRIPTION	54
54-2	MATERIALS	54
54-3	CONSTRUCTION DETAILS	54
54-3.01	GENERAL	54
54-3.02	CEMENT CONCRETE PAVEMENTS	54
54-3.03	RIGID TYPE PAVEMENTS RESURFACED WITH ASPHALT CONCRETE	54
54-3.04	ASPHALT CONCRETE STREETS ON GRANULAR BASE	54
54-3.05	OIL MAT STREETS	54
54-3.06	INCIDENTAL WORK	54
54-3.07	RESPONSIBILITY FOR PAVEMENT PATCHING	54
54-4	MEASUREMENT AND PAYMENT	54

Section 55—Top Soil

55-1	DESCRIPTION	54
55-2	MATERIALS	54
55-2.01	TOP SOIL, PROCURED	54
55-3	CONSTRUCTION DETAILS	54
55-3.01	PLACEMENT OF TOP SOIL	54
55-3.02	REMOVAL AND REPLACEMENT OF TOP SOIL	54
55-4	MEASUREMENT	54
55-4.01	TOP SOIL, PROCURED	54
55-4.02	REMOVAL AND REPLACEMENT OF TOP SOIL	54
55-5	PAYMENT	54

Section 56—Lawn Removal and Replacement

56-1	DESCRIPTION	54
56-2	CONSTRUCTION DETAILS	54
56-3	MEASUREMENT	54
56-4	PAYMENT	54

Section 57—Finishing and Cleanup

57-1	DESCRIPTION	54
57-2	CONSTRUCTION DETAILS	54
57-3	MEASUREMENT AND PAYMENT	55

(Section Nos. 58 and 59 reserved for possible future use)

DIVISION THREE

SANITARY SEWERS AND STORM DRAINS

Section 60—Pipe Materials and Testing for Sewers, Drains and Culverts

60-1	DESCRIPTION	56
60-2	GENERAL	56
60-3	MATERIALS AND TESTING	56
60-3.01	PIPE MATERIALS	56
	60-3.01A Concrete Pipe, Nonreinforced	56
	60-3.01B Concrete Pipe, Reinforced	56
	60-3.01C Vitrified Clay Pipe	56
	60-3.01D Asbestos-Cement Pipe	56
	60-3.01E Galvanized Corrugated Metal Pipe	56
	60-3.01E1 Bituminous Coated Paved Invert Metal Pipe	56
	60-3.01E2 Asbestos Impregnated Galvanized Corrugated Metal Pipe	56
	60-3.01E Smooth Lined Corrugated Metal Pipe	56
60-3.02	JOINTING MATERIALS	56
	60-3.02A Flexible Gasketed Joints	56
	60-3.02B Coupling Bands for Corrugated Metal Pipe	56
	60-3.02C Mortar Joints	56
60-3.03	FITTINGS	56
60-3.04	CAP FOR FITTINGS	56
60-4	MEASUREMENT AND PAYMENT	56

Section 61—Trench Excav., Backfill, Foundation and Bedding for Sewers, Drains and Culverts

61-1	DESCRIPTION	56
61-2	CLASSIFICATION	56
61-2.01	TRENCH EXCAVATION AND BACKFILL, CLASS A	56
61-2.02	TRENCH EXCAVATION AND BACKFILL, CLASS B	56
61-2.03	TRENCH EXCAVATION AND BACKFILL, CLASS C	56
61-2.04	TRENCH EXCAVATION AND BACKFILL, CLASS D	56
61-3	CONSTRUCTION DETAILS	56
61-3.01	EXCAVATION	57
	61-3.01A Widths of Sewer Trenches	57
	61-3.01B Control of Material Piled Alongside Trench	57
61-3.02	DEWATERING	57
61-3.03	FOUNDATIONS AND BEDDING	57
	61-3.03A Foundation Preparation	57
	61-3.03B Classification of Bedding	57
	61-3.03B1 Class A Bedding	57
	61-3.03B2 Class B Bedding	57
	61-3.03B3 Class C Bedding	58
	61-3.03B4 Class D Bedding	58
	61-3.03C Pipe Bending in Solid Rock Excavation	58
	61-3.03D Foundation Material	58
61-3.04	CRIBBING AND SHEETING	58
61-3.05	BACKFILLING	58
61-3.06	COMPACTION OF TRENCH BACKFILL	58
	61-3.06A Water Settling	58
	61-3.06A1 Water for Uses Other Than Trench Backfill	58
	61-3.06B Mechanical Tamper	58
	61-3.06C Vibratory Compactor	58

(Continued on next page)

Sec.	Title	Page
61-3.07	IMPORTED MATERIAL FOR TRENCH BACKFILL	58
61-3.08	TOP SOIL REMOVAL AND REPLACEMENT	58
61-3.09	LAWN REMOVAL AND REPLACEMENT	58
61-4	MEASUREMENT AND PAYMENT	58
61-4.01	SEWER TRENCH EXCAVATION AND BACKFILL	58
	61-4.01A Measurement by the Linear Foot	58
	61-4.01B Measurement by the Cubic Yard	58
61-4.02	IMPORTED MINERAL AGGREGATE FOR TRENCH BACKFILL	59
61-4.03	PIPE BEDDING CLASS A	59
61-4.04	FOUNDATION MATERIAL	59
61-4.05	BEDDING MATERIAL	59
	61-4.05A Pipe Bedding Class B	59
61-4.06	MECHANICAL TAMPERS AND VIBRATORY COMPACTORS	59
61-5	PAYMENT	59

Section 62—Pipe Laying, Bedding and Testing

62-1	DESCRIPTION	59
62-2	MATERIALS	59
62-3	CONSTRUCTION DETAILS	59
62-3.01	SURVEY LINE AND GRADE	59
62-3.02	SEWER PIPE LAYING	59
62-3.03	CULVERT PIPE	59
62-3.04	DEWATERING	59
62-3.05	BEDDING	60
62-3.06	PLUGS FOR TEES, WYES, ENDS OF CONNECTIONS	60
62-3.07	PIPE MARKINGS	60
62-3.08	PIPE JOINTING	60
	623.08A Hand Mortared Joints	60
	62-3.08B Gasket Type Joints	60
	62-3.08C Jointing of Dissimilar Pipes	60
62-3.09	SEWER AND DRAIN LINE CONNECTIONS	60
	62-3.09A Side Sewer Connections	60
	62-3.09B Manhole Connections	60
62-3.10	TESTING FOR ACCEPTANCE	60
	62-3.10A Exfiltration Test	60
	62-3.10B Infiltration Test	60
	62-3.10C Other Test Allowances	60
	62-3.10C1 Alternate Exfiltration Test, Large Pipe	60
	62-3.10D Payment for Tests	61
62-3.11	TEES AND WYES	61
62-4	MEASUREMENT	61
62-5	PAYMENT	61

Section 63—Manholes for Storm and Sanitary Sewers

63-1	DESCRIPTION	61
63-2	MATERIALS	61
63-2.01	REINFORCED CONCRETE	61
	63-2.01A Cement	62
	63-2.01B Wire Fabric Reinforcement	62
	63-2.01C Bar Reinforcement	62
	63-2.01D Aggregates	62
	63-2.01E Mixture	62
	63-2.01F Curing	62
	63-2.01G Strength	62
63-2.02	STEPS	62
	63-2.02A Aluminum Steps	62
	63-2.02B Galvanized Deformed Bar Steps	62
63-2.03	LADDERS	62
63-2.04	MORTAR	62
	63-2.04A Mortar for Jointing	62
	63-2.04B Mortar for Plaster-coating	62
63-2.05	CONCRETE MASONRY UNITS	62
63-2.06	CONCRETE BRICK	62
63-2.07	CLAY BRICK	62
63-2.08	MANHOLE RING AND COVER CASTINGS	62
63-2.09	PRECAST MANHOLE COMPONENTS	62
	63-2.09A Base Sections	62
	63-2.09B Precast Manhole Sections	62
	63-2.09C Precast Cones	62
	63-2.09D Flat Slab Covers	62
	63-2.09E Flat Slab Reducing Sections	62
	63-2.09F Permissible Variation in Precast Section Dimensions	62
	63-2.09G Workmanship and Finish of Precast Sections	62
63-2.10	SHOP FABRICATED CORRUGATED METAL MANHOLES	62
63-2.11	MONOLITHIC CONCRETE MANHOLES	62
63-3	CONSTRUCTION DETAILS	62
63-3.01	FOUNDATION PREPARATION	62
	63-3.10A Dewatering	62
	63-3.01B Sub-base Preparation	62
63-3.02	BEDDING FOR PRECAST MANHOLE BASES	62
63-3.03	CAST-IN-PLACE BASES	62
63-3.04	MONOLITHIC CONCRETE BASE, LARGE DIAMETER PIPE	62
63-3.05	MANHOLE DIMENSIONS	63
63-3.06	BLOCK OR BRICK MANHOLES	63
63 3.07	PRECAST MANHOLES	63
	63-3.07A Manhole with Precast Base	63
	63-3.07B Manhole with Cast-in-Place Base Sections	63
63-3.08	MONOLITHIC CONCRETE MANHOLES	63
63-3.09	SHOP FABRICATED CORRUGATED METAL MANHOLES	63
63-3.10	GRADE ADJUSTMENT MANHOLE COVERS	63
	63-3.10A Streets at Grade	63
	63-3.10B Streets with No Established Grade	63
63-3.11	CHANNELS	63
63-3.12	PIPE CONNECTIONS	63
63-3.13	BACKFILL	63
63-3.14	DROP MANHOLES	63
63-3.15	LADDERS AND LADDER IRONS	64
63-4	MEASUREMENT	64
63-5	PAYMENT	64

Section 64—Catch Basins and Inlets

64-1	DESCRIPTION	64
64-1.01	CATCH BASIN INLET, RECTANGULAR CROSS SECTION	64
64-1.02	CATCH BASINS, ROUND BARREL CROSS SECTION	64
64-1.03	COMBINATION CURB AND GUTTER CATCH BASIN INLET	64
64-1.04	INLETS	64
64-2	MATERIALS	64
64-2.01	CASTINGS	64
	64-2.01A Ring Frame and Covers, Type 139 and Type 157	64
	64-2.01B Rectangular Frames, Type 168 and Type 169	64
	64-2.01C Rectangular Grates, Type 170	64
64-2.02	TRAP CASTINGS	64
	64-2.02A Outlet Traps, Type 160	64
	64-2.02B Outlet Traps, Type 162	64
64-2.03	MORTAR	64
64-3	CONSTRUCTION DETAILS	64
64-3.01	LOCATION AND GRADE ADJUSTMENT	65
64-3.02	PIPE CONNECTIONS	65
64-3.03	SUBGRADE DRAINAGE OPENINGS	65
64-3.04	SEEPAGE STRUCTURE	65
64-3.05	TRAPS	65
64-3.06	INLETS	65
64-4	MEASUREMENT	65
64-4.01	CATCH BASIN OR INLET	65
64-5	PAYMENT	65
64-5.01	CATCH BASIN AND INLET	65
64-5.02	TRAP	65
64-5.03	CATCH BASIN INLET FRAME AND GRATE	65
64-5.04	ADJUSTMENT OF EXISTING CATCH BASIN AND INLET	65

Section 65—Subsurface Drains

65-1	DESCRIPTION	65
65-2	MATERIALS AND TESTING	65
65-2.01	CORRUGATED METAL PIPE	65
	65-2.01A Bituminous Coated Corrugated Metal Pipe	65
65-2.02	CLAY PIPE	65
65-2.03	PERFORATED CONCRETE PIPE	65
65-2.04	PERFORATED ASBESTOS-CEMENT PIPE	65
65-2.05	INSPECTION	65
	65-2.05A Inspection at Factory	65
	65-2.05B Disposition of Defective Material	65
	65-2.05C Material Furnished by Contractor	65
	65-2.05D Material Furnished by Owner	65
65-3	CONSTRUCTION DETAILS	65
65-3.01	EXCAVATION	65
	65-3.01A General	66
	65-3.01B Protection of Existing Utilities	66
	65-3.01C Braced and Sheeted Trench	66

(Continued on next page)

Sec.	Title	Page
65-3.02	PIPE LAYING	66
	65-3.02A General	66
	65-3.02B Bedding	66
	65-3.02C Inspection	66
	65-3.02D Lowering Pipe and Fittings into Trench	66
65-3.03	PIPE JOINTING	66
	65-3.03A Corrugated Pipe	66
	65-3.03B Asbestos-Cement Pipe	66
	65-3.03C Clay Pipe	66
	65-3.03D Concrete Pipe	66
65-3.04	BACKFILLING WITH FILTER MATERIAL	66
	65-3.04A Filter Material	66
	65-3.04B Placing Filter Material	66
65-3.05	RESTORATION, FINISHING AND CLEANUP	66
65-4	MEASUREMENT AND PAYMENT	66
65-4.01	GENERAL	66
65-4.02	PIPE	66
65-4.03	EXCAVATION AND BACKFILL	66
65-4.04	FILTER MATERIAL	66
65-4.05	MECHANICAL TAMPER	66

Section 66—Side Sewers

66-1	DESCRIPTION	66
66-2	MATERIALS	66
66-2.01	PIPE	66
66-2.02	JOINTS	66
66-2.03	FITTINGS	66
66-3	CONSTRUCTION DETAILS	66
66-3.01	GENERAL	66
	66-3.01A Side Sewers Not Shown on Plans	66
66-3.02	EXCAVATION AND BACKFILL	67
66-3.03	PIPE LAYING AND JOINTING	67
	66-3.03A Line and Grade	67
	66-3.03B Pipe Laying	67
	66-3.03C Jointing	67
66-3.04	FITTINGS	67
66-3.05	CLEANOUTS	67
66-3.06	INSPECTION AND TESTING	67
	66-3.06A Inspection	67
	6-3.06B Testing	67
66-3.07	MISCELLANEOUS REQUIREMENTS	67
	66-3.07A Requirements	67
66-3.08	RESTORATION, FINISHING AND CLEANUP	67
66-3.09	EXTENDING SIDE SEWERS INTO PRIVATE PROPERTY	67
66-3.10	END PIPE MARKER WIRES	67
66-4	MEASUREMENT	67
66-5	PAYMENT	68

Section 67—Pipe Covering and Embankment for Sewer Construction

67-1	DESCRIPTION	68
67-2	CONSTRUCTION DETAILS	68
67-2.01	PIPE BED	68
67-2.02	PIPE COVER	68
67-2.03	SOURCE OF MATERIAL	68
67-3	MEASUREMENT	68
67-4	PAYMENT	68

Section 68—Finishing and Cleanup for Underground Conduits

68-1	CLEANUP	68

Section 69—Pipe Connections

69-1	DESCRIPTION	68
69-2	MATERIALS	68
69-3	CONSTRUCTION DETAILS	68
69-3.01	EXCAVATION AND BACKFILL	68
69-3.02	PIPE LAYING, JOINTING AND TESTING	68
69-3.03	CATCH BASIN CONNECTIONS	68
69-3.04	INLET CONNECTIONS	69
69-3.05	STANDING CONNECTIONS	69
69-4	MEASUREMENT	69
69-5	PAYMENT	69

(Section Nos. 70 and 71 reserved for possible future use)

DIVISION FOUR

WATER DISTRIBUTION

Section 72—Pipe for Water Mains

Sec.	Title	Page
72-1	GENERAL	70
72-2	PIPE	70
72-2.01	CAST IRON PIPE	70
72-2.02	ASBESTOS-CEMENT PIPE	70
72-2.03	CONCRETE CYLINDER PIPE	70
72-2.04	STEEL PIPE	70
	72-2.04A Coatings for Steel Pipe	70
	72-2.04B Couplings for Steel Pipe	70
72-2.05	GALVANIZED STEEL PIPE	70
72-2.06	GALVANIZED WROUGHT IRON PIPE	70
72-2.07	PIPE FITTINGS	70
	72-2.07A Cast Iron	70
	72-2.07B Steel	70
72-2.08	SPECIAL FITTINGS	70
72-3	MEASUREMENT AND PAYMENT	70

Section 73—Trench Excavation and Backfill for Water Mains

73-1	GENERAL	70
73-1.01	UNGRADED STREETS	70
73-1.02	CLEARING AND GRUBBING IN UNGRADED STREETS	70
73-1.03	REMOVAL OF PAVEMENT FROM DRIVEWAYS AND SIDEWALKS	70
73-1.04	GRADE AND ALIGNMENT	70
73-1.05	UNDERGROUND UTILITIES	70
73-2	TRENCH EXCAVATION	70
73-2.01	CUTTING EXISTING SERVICES	70
73-2.02	SOLID ROCK EXCAVATION	70
73-2.03	EXTRA EXCAVATION	70
73-2.04	UNFORESEEN BURIED OBJECTS ENCOUNTERED IN TRENCH EXCAVATION ON GRADED STREETS	71
73-2.05	REMOVAL OF UNSUITABLE MATERIALS	71
73-2.06	BACKFILLING TRENCHES	71
73-2.07	COMPACTION OF BACKFILL	71
	73-2.07A Water Settling of Trenches	71
	73-2.07B Equipment for Water Settling Trenches	71
	73-2.07C Source of Water for Water Settling	71
	73-2.07D Compaction of Backfill under Special Conditions	71
73-2.08	BANK RUN GRAVEL FOR TRENCH BACKFILL	71
73-2.09	SHEETING LEFT IN PLACE	71
73-2.10	TEMPORARY PEDESTRIAN CROSSINGS	71
73-3	MEASUREMENT AND PAYMENT	71
73-3.01	CLEARING AND GRUBBING	71
73-3.02	TRENCH EXCAVATION AND BACKFILL	71
73-3.03	SOLID ROCK EXCAVATION	71
73-3.04	REMOVAL AND REPLACEMENT OF UNSUITABLE MATERIAL	71
73-3.05	MECHANICAL TAMPING	71
73-3.06	BANK RUN GRAVEL FOR TRENCH BACKFILL	71
73-3.07	SHEETING LEFT IN PLACE	71
73-3.08	TEMPORARY PEDESTRIAN CROSSINGS	71

Section 74—Pipe Installation for Water Mains

74-1	GENERAL	71
74-2	CONSTRUCTION	71
74-2.01	DEWATERING OF TRENCH	71
74-2.02	HANDLING OF PIPE	71
74-2.03	LAYING OF PIPE ON CURVES	71
74-2.04	LAYING CAST IRON PIPE	71
	74-2.04A Joints for Cast Iron Pipe	71
	74-2.04B Bell and Spigot Pipe with Lead Joints	71
	74-2.04C Packing Material	71
	74-2.04D Preparation of Joint	72
	74-2.04E Depth of Jointing Material	72
	74-2.04F Lead	72
	74-2.04G Heating and Pouring of Lead	72
	74-2.04H Position of Joint Runner	72
	74-2.04I Calking Lead Joints	72
74-2.05	JOINTING MECHANICAL JOINT PIPE	72
	74-2.05A Cleaning and Assembling Joint	72
	74-2.05B Bolting of Joint	72

(Continued on next page)

Sec.	Title	Page
74-2.06	JOINTING RUBBER GASKET JOINT PIPE (TYTON TYPE)	72
	74-2.06A Cleaning and Assembling Joint	72
74-2.07	LAYING ASBESTOS-CEMENT PIPE	72
	74-2.07A Couplings for Asbestos-cement Pipe	72
	74-2.07B Cleaning and Assembling Joints	72
	74-2.07C Short Lengths and Field Cut Joints	72
74-2.08	LAYING STEEL PIPE	72
	74-2.08A Threaded Steel Pipe in Sizes Up to and Including 3½ Inch	72
	74-2.08B Coupled Pipe 4-Inch and Larger	72
74-2.09	LAYING CONCRETE PIPE	72
	74-2.09A Cleaning and Assembling Joint	72
74-2.10	CONNECTIONS TO EXISTING MAINS	72
	74-2.10A Exploratory Holes, Shallow Depth	72
74-2.11	WATER SERVICE CONNECTIONS	72
	74-2.11A Service Connections by Contractor, ¾-Inch	72
74-2.12	FIELD TESTS	72
	74-2.12A Blocking or Bracing	72
	74-2.12B Equipment for Testing	72
	74-2.12C Test Pressure and Point of Application	73
	84-2.12D Test Time Required	73
	74-2.12E Defective Materials and Workmanship	73
	74-2.12F Testing Sections with Hydrants Installed	73
	74-2.12G Testing Extensions from Existing Mains	73
	74-2.12H Testing Hydrants Installed on Existing Mains	73
74-2.13	DISINFECTION OF WATER MAINS	73
	74-2.13A Flushing	73
	74-2.13B Requirement of Chlorine	73
	74-2.13C Form of Applied Chlorine	74
	74-2.13D Dry Calcium Hypochlorite	74
	74-2.13E Liquid Chlorine	74
	74-2.13F Chlorine-bearing Compounds in Water	74
	74-2.13G Point of Application	74
	74-2.13H Rate of Application	74
	74-2.13I Preventing Reverse Flow	74
	74-2.13J Retention Period	74
	74-2.13K Chlorinating Valves and Hydrants	74
	74-2.13L Final Flushing and Testing	74
	74-2.13M Repetition of Flushing and Testing	74
74-2.14	CONCRETE BLOCKING	74
74-2.15	SPECIAL FITTINGS	74
74-2.16	1½-INCH BLOWOFFS	74
74-3	MEASUREMENT AND PAYMENT	74
74-3.01	MEASUREMENT OF WATER MAINS	74
74-3.02	PAYMENT FOR WATER MAINS AND WATER SERVICE CONNECTIONS	74
74-3.03	PARTIAL PAYMENT FOR MATERIALS DELIVERED	74
74-3.04	CONCRETE BLOCKING	74
74-3.05	TRENCH EXCAVATING AND BACKFILL FOR WATER SERVICE CONNECTIONS	74
74-3.06	1½-INCH BLOWOFFS	74
74-4	UNIT PRICE METHOD OF PAYMENT FOR WATER DISTRIBUTION MAIN CONSTRUCTION (An Alaternate method)	74
74-4.01	MEASUREMENT OF WATER MAINS FOR UNIT PRICE PAYMENT	74
74-4.02	PAYMENT FOR WATER MAIN CONSTRUCTION UNDER UNIT PRICE METHOD	74

Section 75—Gate Valves for Water Mains

75-1	DESCRIPTION	74
75-2	MATERIALS	75
75-2.01	MANUFACTURE AND MARKING	75
75-2.02	TYPE AND MOUNTING	75
75-2.03	END CONNECTIONS	75
75-2.04	GATES VALVES 16-INCH AND LARGER	75
75-2.05	GATE VALVE STEM SEALS	75
75-2.06	TAPPING VALVES	75
75-2.07	HYDROSTATIC TEST PRESSURE AT FACTORY	75
75-2.08	PAINTING AT FACTORY	75
75-3	INSTALLATION OF GATE VALVES	75
75-4	MEASUREMENT AND PAYMENT	75
75-4.01	PAYMENT FOR GATE VALVES	75

Section 76—Valve Chambers and Boxes for Water Mains

76-1	DESCRIPTION	75
76-2	MATERIALS	75
76-2.01	RING AND COVER AND VALVE BOX CASTINGS	75
76-2.02	PORTLAND CEMENT CONCRETE BLOCKS	75
76 2.03	PORTLAND CEMENT CONCRETE	75
76-2.04	MORTAR	75
76-2.05	BRICK	75
	76-2.05A Concrete Brick	75
	76-2.05B Clay Brick	75
76-3	CONSTRUCTION DETAILS	75
76-3.01	PRECAST VALVE CHAMBERS	75
76-3.02	CAST-IN-PLACE CHAMBERS	75
76-3.03	CHAMBERS MASONRY CONSTRUCTED	75
76-3.04	SETTING CAST IRON FRAME AND COVER	75
76-3.05	VALVE CHAMBER DRAIN	75
76-3.06	CAST IRON VALVE BOXES	76
76-4	MEASUREMENT AND PAYMENT	76
76-4.01	PAYMENT FOR VALVE CHAMBERS	76
76-4.02	PAYMENT FOR CAST IRON VALVE BOXES	76

Section 77—Fire Hydrants

77-1	DESCRIPTION	76
77-2	MATERIALS	76
77-2.01	MATERIALS FOR HYDRANTS AND APPURTENANCES	76
77-2.03	MANUFACTURER AND MARKING	76
77-2.03	TYPE AND MOUNTING	76
77-2.04	END CONNECTIONS	76
77-2.05	HYDRANT DIMENSIONS	76
77-2.06	OPERATING NUTS	76
77-2.07	SHACKLING LUGS	76
77-2.08	SIDEWALK FLANGE CONSTRUCTION	76
77-2.09	FACTORY HYDROSTATIC TEST	76
77-2.10	PAINTING	76
77-3	CONSTRUCTION DETAILS	76
77-3.01	SETTING HYDRANTS	76
77-3.02	HYDRANT CONNECTIONS	77
	77-3.02A Shackle Rods	77
	77-3.02B Auxiliary Gate Valve	77
	77-3.02C Cast Iron Valve Boxes	77
77-3.03	RESETTING EXISTING HYDRANTS	77
77-3.04	MOVING EXISTING HYDRANTS	77
77-3.05	RECONNECTING EXISTING HYDRANTS	77
77-3.06	HYDRANT EXTENSIONS	77
77-4	MEASUREMENT AND PAYMENT	77
77-4.01	PAYMENT FOR FIRE HYDRANTS	77
	77-4.01A Hydrant Connection Pipe	77
	77-4.01B Hydrant Shackle Rods	77
77-4.02	RESETTING EXISTING HYDRANTS	77
77-4.03	MOVING EXISTING HYDRANTS	77
77-4.04	RECONNECTING EXISTING HYDRANTS	77
77-4.05	HYDRANT EXTENSIONS	78

Section 78—Restoration and Cleanup of Water Main Construction

78-1	GENERAL	78
78-2	CONSTRUCTION DETAILS	78
78-2.01	REMOVAL OF EXISTING STREET IMPROVEMENTS	78
78-2.02	RESTORATION OF EXISTING STREET IMPROVEMENTS	78
78-2.03	MAINTAINING POSTAL SERVICE	78
78-2.04	FINISHING AND CLEANUP	78
78-3	MEASUREMENT AHD PAYMENT	78
78-3.01	EXISTING STREET IMPROVEMENTS	78
78-3.02	CEMENT CONCRETE CURB, CURB AND GUTTER	78
78-3.03	FINISHING AND CLEANUP	78

DIVISION FIVE

STRUCTURAL

Section 100—Structures—General

100-1	DESCRIPTION	79
100-2	MATERIALS	79
100-3	CONSTRUCTION DETAILS	79
100-3.01	NAME PLATES	79
100-3.02	BRIDGE DRAINS	79
100-3.03	DOWNSPOUTS	79
100-3.04	METAL RAILING	79
100-3.05	CLEARING THE SITE	79

(Continued on next page)

Sec.	Title	Page
100-3.06	FOUNDATION DATA	79
100-3.07	ALIGNMENT AND GRADE	79
100-3.08	APPROACHES TO MOVABLE SPANS	80
100-3.09	ERECTION METHODS	80
100-3.10	SAFETY NETS AND STAGING	80
100-3.11	NAVIGABLE STREAMS	80
100-3.12	ARCHITECTURAL FEATURES	80
100-3.13	APPROVAL OF MATERIALS	80
100 3.14	FINAL CLEANUP	80
100-3.15	NORMAL TEMPERATURE	80
100-4	MEASUREMENT	80
100-5	PAYMENT	80

Section 101—Concrete Structures

Sec.	Title	Page
101-1	DESCRIPTION	80
101-2	MATERIALS	80
101-2.01	CONCRETE	81
101-2.02	REINFORCING STEEL	81
101-2.03	STRUCTURAL STEEL	81
101-2.04	TIMBER	81
101-2.05	PILING	81
101-2.06	MISCELLANEOUS METALS	81
101-3	CONSTRUCTION DETAILS	81
101-3.01	DATE PANELS	81
101-3.02	FALSEWORK	81
	101-3.02A Restricted Overhead Clearance Sign	81
101-3.03	FORMS	81
	101-3.03A Requirements	81
	101-3.03B Form Footings and Posts	81
	101-3.03C Stringers and Beams	81
	101-3.03D Brancing	81
	101-3.03E Form Ties	81
	101-3.03F Face Lumber	81
	101-3.03G Oiling	81
	101-3.03H Temporary Holes in Forms	82
	101-3.05i Steel Forms	82
	101-3.03J Concrete Slab Forms on Steel Spans	82
101-3.04	PLANS FOR FALSEWORK AND FORMS	82
101-3.05	REMOVAL OF FALSEWORK AND FORMS	82
101-3.06	PLACING ANCHOR BOLTS	82
101-3.07	EXPANSION SHOES AND PLATES	82
101-3.08	DRAINAGE OF BOX GIRDER CELLS	83
101-3.09	OPENING TO TRAFFIC	83
101-4	MEASUREMENT	83
101-5	PAYMENT	83

Section 102—Steel Structures

Sec.	Title	Page
102-1	DESCRIPTION	83
102-2	MATERIALS	83
102-3	CONSTRUCTION DETAILS	83
102-3.01	STORAGE IN FIELD	83
102-3.02	FALSEWORK	83
102-3.03	HANDLING STEEL MEMBERS	83
102-3.04	ALIGNMENT AND CAMBER	83
102-3.05	STRAIGHTENING BENT MATERIALS	83
102-3.06	ASSEMBLING AND RIVETING	83
102-3.07	ADJUSTING PIN NUTS	83
102-3.08	SETTING ANCHOR BOLTS	83
102-3.09	SETTING AND GROUTING SHOES	83
102-3.10	PLACING SUPERSTRUCTURE	84
102-3.11	SETTING EXPANSION BEARING BED PLATES	84
102-3.12	AIR FOR RIVETING	84
102-3.13	CONCRETE FLOORS ON STEEL SPANS	84
102-3.14	FILLING AND DRAINING POCKETS	84
102-3.15	PAINTING	84
102-4	MEASUREMENT	84
102-5	PAYMENT	84

Section 103—Timber Structures

Sec.	Title	Page
103-1	DESCRIPTION	84
103-2	MATERIALS	84
103-2.01	TIMBER AND LUMBER	84
103-2.02	CASTINGS	84
103-2.03	BOLTS, WASHERS AND OTHER HARDWARE	84
103-2.04	STRUCTURAL METAL	84
103-2.05	OTHER MATERIALS	85
103-3	CONSTRUCTION DETAILS	85
103-3.01	STORAGE OF MATERIAL	85
103-3.02	WORKMANSHIP	85
103-3.03	SHOP DETAILS	85
103 3.04	HANDLING TREATED TIMBER	85
103-3.05	FIELD TREATMENT OF CUT SURFACES, BOLT HOLES AND CONTACT SURFACES	85
103-3.06	PAINTING	85
103-3.07	HOLES FOR RODS, BOLTS AND BOAT SPIKES	85
103-3.08	BOLTS, WASHERS AND OTHER HARDWARE	85
103-3.09	COUNTERSINKING	85
103-3.10	FRAMING	85
103-3.11	FRAMED BENTS	86
103-3.12	CAPS	86
103-3.13	BRACING	86
103-3.14	STRINGERS	86
103-3.15	WHEEL GUARD AND RAILING	86
103-3.16	TRUSSES	86
103-3.17	SINGLE PLANK FLOORS	86
103-3.18	LAMINATED FLOORS	86
103-3.19	PLANK SUB-FLOORS FOR CONCRETE DECKS	86
103-4	MEASUREMENT	86
103-5	PAYMENT	87

Section 104—(Spare)

Section 105—(Spare)

Section 106—Piling

Sec.	Title	Page
106-1	DESCRIPTION	87
106-1.01	TIMBER PILING	87
106-1.02	COMPOSITE PILING	87
106-1.03	PRECAST CEMENT CONCRETE PILING	87
106-1.04	CAST-IN-PLACE CEMENT CONCRETE PILING	87
106-1.05	STEEL PILING	87
106-2	MATERIALS	87
106-2.01	TIMBER PILING	87
	106-2.01A Untreated Piling	87
	106-2.01B Creosote Treated Piling	87
	106-2.01C Composite Piles	87
106-2.02	PRECAST REINFORCED CEMENT CONCRETE PILING	87
	106-2.02A Concrete	87
	106-2.02B Reinforcing Steel	87
106-2.03	CAST-IN-PLACE CEMENT CONCRETE PILING	88
	106-2.03A Steel Shells or Casings	88
	106-2.03A1 Self-Supporting Driven Shells	88
	106-2.03A2 Mandrel Driven Steel Shells	88
	106-2.03B Concrete	88
	106-2.03C Reinforcing Steel	88
106-2.04	STEEL PILING	88
106-3	CONSTRUCTION DETAILS	88
106-3.01	GENERAL PROVISIONS	88
	106-3.01A Ordering Piling	88
	106-3.01B Piling Ordered and Not Driven	88
	106-3.01C Piles Destroyed in Handling or Driving	88
	106-3.01D Preparation for Driving	88
	106-3.01E Penetration	88
	106-3.01F Elevation of Cutoff	88
	106-3.01G Piles Driven Below Cutoff	88
	106-3.01H Equipment for Driving	88
	106-3.01H1 Hammers	88
	106-3.01H2 Leads	89
	106-3.01H3 Water Jets	89
	106-3.01I Test Piles	89
	106-3.01J Loading Tests	89
	106-3.01K Alignment of Piles	89
106-3.02	TIMBER PILES	89
	106-3.02A Peeling	89
	106-3.02A1 Untreated and Creosote Treated Piles	89
	106-3.02A2 Composite Piles	89
	106-3.02B Storage and Handling	89
	106-3.02C Preparation for Driving	89
	106-3.02C1 Fresh Cut Heads	89
	106-3.02C2 Followers	89
	106-3.02C3 Pointing and Placing Metal Shoes	89
	106-3.02C4 Splicing	89
	106-3.02D Pile Bents	90
	106-3.02E Splicing Composite Piles	90
	106-3.02F Penetration	90
	106-3.02G Treatment of Pile Heads	90
	106-3.02H Elevation of Pile Tops	90
	106-3.02I Determination of Bearing Values	90

(Continued on next page)

Sec.	Title	Page
106-3.03	PRECAST CEMENT CONCRETE PILING	90
	106-3.03A Forms	90
	106-3.03B Reinforcement	90
	106-3.03C Casting	90
	106-3.03D Finishing	90
	106-3.03E Curing	90
	106-3.03F Storage and Handling	91
	106-3.03G Age Before Driving	91
	106-3.03H Protection of Head	91
	106-3.03I Extensions or Build-ups	91
	106 3.03J Determination of Bearing Values	91
106-3.04	CAST-IN-PLACE CONCRETE PILES	91
	106-3.04A Steel Shells or Casings	91
	106-3.04A1 Self-supporting Driven Shells	91
	106-3.04A2 Mandrel Driven Steel Shells	91
	106-3.04B Driving Steel Shells	91
	106-3.04C Cutting Off Steel Shells	92
	106-3.04D Inspection	92
	106-3.04E Determination of Bearing Values	92
	106-3.04F Reinforcement	92
	106-3.04G Placing Concrete	92
	106-3.04H Trestle Piles	92
106-3.05	STEEL PILES	92
	106-3.05A Storage and Handling	92
	106-3.05B Driving	92
	106-3.05C Splicing	92
	106-3.05D Capping	92
	106-3.05E Determination of Bearing Values	92
106 5	MEASUREMENT AND PAYMENT	92
106-5.01	TIMBER PILING	93
106-5.02	COMPOSITE PILING	93
	106-5.02A Treated Timber and Untreated Timber	93
	106-5.02B Reinforced Concrete and Untreated Timber	93
106-5.03	CEMENT CONCRETE PILING	93
106-5.04	STEEL PILING	93
106-5.05	TEST PILES	93
106-5.06	LOADING TESTS	94

Section 107—Portland Cement Concrete for Structures

Sec.	Title	Page
107-1	DESCRIPTION	94
107-2	MATERIALS	94
107-2.01	CONCRETE	94
107-2.02	PLASTIC WATERSTOP	94
107-2.03	RUBBER SEALED EXPANSION JOINTS	94
107-3	CONSTRUCTION DETAILS	94
107-3.01	CLASSIFICATION—CONCRETE MIXES FOR STRUCTURES	94
107-3 02	PROPORTIONS FOR STRUCTURE CONCRETE MIXES	95
	107-3.02A Concrete Design Strength	95
	107-3.02B Air-entrained Concrete	95
	107-3.02C Water Reducing Additive	95
107-3.03	STORAGE OF CONCRETE AGGREGATES	96
107-3.04	STORAGE OF CEMENT	96
107-3.05	MEASURING MATERIALS	96
107-3.06	MIXING CONCRETE	96
	107-3.06A Machine Mixing	96
	107-3.06B Hand Mixing	96
	107-3.06C Ready-mixed Concrete	96
	107-3.06D Retempering	96
107-3.07	CONSISTENCY	96
107-3.08	PLACING CONCRETE	97
	107-3.08A Sequence of Placing	97
	107-3.08B Placing Concrete in Cold Weather	97
	107-3.08C Placing Concrete in Water	98
107-3.09	CONCRETE EXPOSED TO SEA WATER	98
107-3.10	CONCRETE EXPOSED TO ALKALINE SOILS OR WATER	98
107-3.11	VIBRATION OF CONCRETE	98
107-3.12	FINISHING STRUCTURE, ROADWAY AND SIDEWALK SLABS	98
107-3.13	CURING CONCRETE	99
107-3.14	CONSTRUCTION JOINTS	99
107-3.15	EXPANSION JOINTS	99
107-3.16	FINISHING FORM—FINISHED CONCRETE SURFACES	99
	107-3.16A Class 1—Surface Finish	99
	107-3.16B Class 2—Surface Finish	99
	107-3.16C Class 3—Surface Finish	99
107-3.17	FINISHES FOR FLOOR SLABS AND SIDEWALK SLABS	100
	107-3.17A Class 4 Float Floor Finish	100
	107-3.17B Class 5—Sweat Floor Finish	100
	107-3.17C Class 6—Hard Trowel Floor Finish	100
	107-3.17D Class 7—Sidewalk Slab Finish	100
107-4	MEASUREMENT	100
107-5	PAYMENT	100

Section 108—(Spare)

Section 109—(Spare)

Section 110—(Spare)

Section 111—Reinforcing Steel

Sec.	Title	Page
111-1	DESCRIPTION	100
111-2	MATERIALS	100
111-2.01	DEFORMED STEEL BARS	100
111-2.02	WIRE MESH	100
111-2.03	COLD DRAWN WIRE	101
111-3	CONSTRUCTION DETAILS	101
111-3.01	ORDERING	101
111-3.02	INSPECTION	101
	111-3.02A Notice of Rolling	101
	111-3.02B Facilities for Inspection	101
	111-3.02C Inspector's Authority	101
	111-3.02D Rejections	101
111-3.03	BENDING	101
111-3.04	PROTECTION OF MATERIALS	101
111-3.05	PLACING AND FASTENING	101
111-3.06	SPLICING	101
	111-3.06A Steel Bars	101
	111-3.06B Wire Mesh	101
	111-3.06C Butt Welding Reinforcing Steel	101
111-4	MEASUREMENT	102
111-5	PAYMENT	102

Section 112—Structural Steel

Sec.	Title	Page
112-1	DESCRIPTION	102
112 2	MATERIALS	102
112-2.01	STRUCTURAL CARBON STEEL	102
112-2.02	STRUCTURAL LOW ALLOY STEEL	102
112-2.03	STRUCTURAL RIVET STEEL	102
112-2.04	RIVET BOLTS	102
112-2.05	BOLTS	102
	112-2.05A Unfinished Bolts	102
	112-2.05B Turned Bolts	102
112 3	CONSTRUCTION DETAILS	102
112-3.01	MILL AND SHOP INSPECTION	102
	112 3.01A Notice of Rolling	102
	112-3.01B Facilities for Inspection	102
	112-3.01C Inspector's Authority	102
	112-3.01D Rejections	103
112-3 02	FIELD INSPECTION	103
112-3.03	MILL ORDERS AND SHIPPING STATEMENTS	103
112-3.04	WEIGHING	103
112 3.05	LOADING AND UNLOADING	103
112-3.06	SHOP PLANS	103
112-3.07	SUBSTITUTIONS	103
112-3.08	SHOP STORAGE OF MATERIALS	103
112-3.09	STRAIGHTENING MATERIAL	103
112-3.10	WORKMANSHIP AND FINISH	103
112-3.11	RIVET HOLES	103
	112-3.11A General Requirements	103
	112-3.11B Punched Holes	103
	112-3.11C Drilled Holes	103
	112-3.11D Sub-punched and Reamed Holes	104
	112-3.11E Reaming	104
	112-3.11F Accuracy of Reamed and Drilled Holes	104
	112-3.11G Drifting of Holes	104
112-3.12	SHOP ASSEMBLING	104
112-3.13	MATCH MARKING	104
112-3.14	SAND-BLASTING	104
112-3.15	PAINTING	104
112-3.16	RIVETS	104
112-3.17	BOLTS AND BOLTED CONNECTIONS	104
112-3.18	RIVET BOLTS	104

(Continued on next page)

Sec.	Title	Page
112-3.19	RIVETING	104
112-3.20	EDGE FINISHING	105
112-3.21	PLANING BEARING SURFACES	105
112-3.22	ABUTTING JOINTS	105
112-3.23	END CONNECTION ANGLES	105
112-3.24	BUILT MEMBERS	105
112-3.25	HAND HOLES	105
112-3.26	LACING BARS	105
112-3.27	PLATE GIRDERS	105
	112-3.27A Web Plates	105
	112-3.27B Web Stiffeners	105
	112-3.27C Web Splices and Fillers	105
112-4.28	EYEBARS	105
112-3.29	ANNEALING	105
112-3.30	PINS AND ROLLERS	105
112-3.31	BORING PIN HOLES	105
112-3.32	PIN CLEARANCES	105
112-3.33	WELDS	106
	112-3.33A Corrections in Welding	106
112-3.34	SCREW THREADS	107
112-3.35	MEASURING CAMBER	107
112-5	MEASUREMENT AND PAYMENT	107
112-5.01	STRUCTURAL CARBON STEEL	107
112-5.02	STRUCTURAL LOW ALLOY STEEL	107
112-5.03	MISCELLANEOUS METAL	107

Section 113—Castings, Steel Forgings and Miscellaneous Metals

113-1	DESCRIPTION	107
113-2	MATERIALS	107
113-2.01	STEEL CASTINGS	107
113-2.02	GRAY-IRON CASTINGS	107
113-2.03	MALLEABLE IRON CASTINGS	107
113-2.04	STEEL FORGINGS AND STEEL SHAFTING	107
113-2.05	BRONZE CASTINGS	107
113-2.06	COPPER SEALS	107
113-2.07	NODULAR IRON CASTINGS	107
113-3	CONSTRUCTION DETAILS	107
113-3.01	GENERAL	108
113-5	MEASUREMENT AND PAYMENT	108

Section 114—Timber and Lumber

114-1	DESCRIPTION	108
114-2	MATERIALS	108
114-2.01	GRADE REQUIREMENTS	108
114-3	CONSTRUCTION DETAILS	108
114-3.01	SURFACING AND SEASONING	108
114-3.02	PROTECTION AGAINST END CHECKING	108
114-3.03	INSPECTION	108
114-3.04	HEWN AND ROUND TIMBERS	108
114-4	MEASUREMENT	108
114-5	PAYMENT	108

Section 115—Preservative Treatment for Timber, Lumber and Piles

115-1	DESCRIPTION	108
115-2	MATERIALS	108
115-2.01	CREOSOTE OIL	108
115-2.02	CHROMATED ZINC ARSENATE (BOLIDEN SALTS)	108
115-2.03	TANALITH (WOLMAN SALTS)	109
115-2.04	AMMONIACAL COPPER ARSENITE (CHEMONITE)	109
115-2.05	PENTACHLOROPHENOL	110
115-3	DETAILS OF PRESERVATIVE TREATMENT	110
115-3.01	GENERAL REQUIREMENTS	110
	115-3.01A Seasoning before Treatment	110
	115-3.01B Placing in Treating Cylinders	110
	115-3.01C Incising	110
	115-3.01D Plant Equipment	110
115-3.02	PRESSURE PROCESSES	110
	115-3.02A Creosote Treatments	110
	115-3.02A1 Oil Seasoning for Douglas Fir	110
	115-3.02A2 Penetration	110
	115-3.02A3 Amount of Preservative	111
	115-3.02A4 Heating with Oil	111
	115-3.02A5 Full-cell Process	111
	115-3.02A6 Empty-cell Process	111
	115-3.02B Chromated Zinc Arsenate (Boliden Salts) Treatment	111

Sec.	Title	Page
	115-3.02C Tanalith (Wolman Salts) Treatment	112
	115-3.02D Ammoniacal Copper Arsenite (Chemonite) Treatment	112
	115-3.02E Pentachlorophenol Treatment	112
115-4	MEASUREMENT	112
115-5	PAYMENT	112

Section 116—Paints and Painting

116-1	DESCRIPTION	112
116-2	MATERIALS	112
116-2.01	RAW MATERIALS	112
116-2.02	PAINT FORMULAS	113
	116-2.02A General	113
	116-2.02B Formula No. A-1-57—Red Lead Shop Coat for Steel	113
	116-2.02C Formula No. A-2-57—Shop Coat for Steel (Alkyd-Linseed Vehicle)	113
	116-2.02D Formula No. A-3-57—Red Lead Sealing Paste	114
	116-2.02E Formula A-4-59—Phenolic-Red Lead Primer	114
	116-2.02F Formula A-5-61—Vinyl Pretreatment	114
	116-2.02G Formula A-6-61—Zinc Dust Zinc Oxide Primer	114
	116-2.02H Formula B-1-57—First Field Coat for Steel (Red Lead)	114
	116-2.02I Formula B-2-57—First Field Coat for Steel (Alkyd Linseed Vehicle)	114
	116-2.02J Formula B-4-59—Phenolic First Field Coat for Steel	114
	116-2.02K Formula C-1-57—Black Second Field Coat for Steel	114
	116-2.02L Formula C-2-57—Gray Second Feld Coat for Steel (Linseed Vehicle)	114
	116-2.02M Formula C-3-57—Gray Second Field Coat for Steel (Alkyd Vehicle)	114
	116-2.02N Formula C-4-57—Green Second Field Coat for Steel (Alkyd Vehicle)	114
	116-2.02O Formula C-5-57—Green Second Field Coat for Steel (Linseed Vehicle)	115
	116-2.02P Formula C-6-59—Green Phenolic Finish Coat for Steel	115
	116-2.02Q Formula D-4-57—Black Enamel	115
	116-2.02R Formula D-5-57—White Guard Rail Paint (Alkyd Vehicle)	115
	116-2.02S Formula D-6-57—White Guard Rail Paint (Linseed Vehicle)	115
	116-2.02T Formula D-1-57—Aluminum Paint	115
	116-2.02U Formula No. E-1-57—White for Wood Structures	115
	116-2.02V Formula E-2-62—Primer for Wood	116
	116-2.02W Formula F-3-57—Orange Equipment Enamel	116
	116-2.02X Formula H-1-57—Primer for Concrete	116
	116-2.02Y Formula H-2-62—White Masonry Paint for Precast Curbs	116
	116-2.02Z Formulas J-1-57, J-2-57, J-3-57—Enamels for Signs	116
	116-2.02AA Formula J-4-57—Brilliant Green Sign Enamel	116
	116-2.02AB Formula J-5-57—Green Stain for Wood Post and Poles	116
	116-2.02AC Traffic Signal Yellow Enamel	116
116-2.02	INSPECTION REQUIREMENTS	116
	116-2.03A General	116
	116-2.03B Process of Manufacture	117
	116-2.03C Viscosity Adjustment	117
	116-2.03D Weight Variations	117
	116-2.03E Drying Time and Quantity of Drier	117
	116-2.03F Working Properties	117
	116-2.03G Storage Properties	117
	116-2.03H Fineness of Grinding	117
	116-2.03I Standard Colors	117
	116-2.03J Containers	117
	116-2.03K Test Methods	117
116-3	CONSTRUCTION DETAILS	117
116-3.01	PAINTING NEW STEEL STRUCTURES	117
	116-3.01A Scope of Work	117
	116-3.01B Number of Coats	117
	116-3.01C Colors of Coats	117
	116-3.01D Weather Conditions	118
	116-3.01E Application	118
	116-3.01F Removal of Improper Paint	118
	116-3.01G Thinning	118
	116-3.01H Shop Cleaning	118
	116-3.01I Shop Painting	118
	116-3.01J Erection Marks	118
	116-3.01K Machine Finished Surfaces	118
	116-3.01L Field Cleaning	118
	116-3.01M Field Painting	118
116-3.02	REPAINTING EXISTING STEEL STRUCTURES	118
	116-3.02A Scope of Work	118
	116-3.02B Number of Coats	118
	116-3.02C Cleaning and Painting	118

(Continued on next page)

Sec.	Title	Page
116-3.03	PAINTING TIMBER STRUCTURES	119
	116-3.03A Number of Coats	119
	116-3.03B Application	119
	116-3.03C Painting Treated Timber	119
116-3.04	PAINTING BEAM GUARD RAIL	119
	116-3.04A Preparation and Preliminary Coats	119
	116-3.04B Spotting and Final Field Coat	119
	116-3.04C Painting Galvanized Rail	119
116-3.05	PAINTING STEEL RAIL	119
116-3.06	PAINTING MISCELLANEOUS GALVANIZED SURFACES	119
116-4	PAINT FILM THICKNESS	119
116-4.01	GENERAL	119
116-5	MEASUREMENT AND PAYMENT	120
116-5.01	GENERAL	120
116-5.02	PAINTING NEW STEEL STRUCTURES	120
116-5.03	REPAINTING EXISTING STEEL STRUCTURES	120
116-5.04	PAINTING TIMBER STRUCTURES	120
116-5.05	PAINTING GUARD RAILS	120

Section 117—Bridge Railings

117-1	DESCRIPTION	120
117-2	MATERIALS	120
117-3	CONSTRUCTION DETAILS	120
117-3.01	CONCRETE RAILINGS	120
	117-3.01A General	120
	117-3.01B Forms for Concrete Railings	120
	117-3.01C Removal of Forms	120
	117-3.01D Finishing and Curing	120
117-3.02	TIMBER RAILINGS	121
117-3.03	METAL RAILINGS	121
117-5	MEASUREMENT AND PAYMENT	121
117-5.01	CONCRETE RAILINGS	121
117-5.02	TIMBER RAILINGS	121
117-5.03	METAL RAILINGS	121

Section 118—Waterproofing

118-1	DESCRIPTION	121
118-2	MATERIALS	121
118-2.01	ASPHALT FOR WATERPROOFING	121
118-2.02	WATERPROOFING FABRIC	122
118-2.03	PORTLAND CEMENT MORTAR	122
118-3	CONSTRUCTION DETAILS	122
118-3.01	STORAGE OF FABRIC	122
118-3.02	PREPARATION OF SURFACE	122
118-3.03	APPLICATION OF WATERPROOFING	122
118-3.04	PROTECTION COURSE	122
118-5	MEASUREMENT AND PAYMENT	122

DIVISION SIX

STANDARD FORMS

1.	PROPOSAL	123
2.	PROPOSAL SIGNATURE SHEET	124
3.	BID BOND FORM	125
4.	INSTRUCTION TO BIDDERS, PROPOSAL, SPECIFICATIONS AND CONTRACT	126
5.	CONTRACT	127-128
6.	CONTRACT BOND	129-130
6a.	CONTRACT BOND (Alternate Form)	131-132
6b.	PRIVATELY FINANCED STREET IMPROVEMENT BOND	133
7.	MINIMUM WAGE AFFIDAVIT	134
8.	(NOT USED)	135
9.	CONTRACT CHANGE ORDER AGREEMENT	136
10.	FORCE ACCOUNT STATEMENT FOR STREET WORK	137
11.	FORCE ACCOUNT STATEMENT OTHER THAN STREET WORK	138
12.	(NOT USED)	139
13.	NON-COLLUSION AFFIDAVIT FORM	140

DIVISION SEVEN

STANDARD PLANS

Division VII contains the standard plans referred to in the text of these standard specifications. A complete listing thereof by plan number, title and page is covered on pages 141 and 142.

DIVISION ONE—GENERAL REQUIREMENTS AND COVENANTS

Section 1—Definitions and Terms

In the interpretation and construction of these specifications and any contract or in any documents or instruments dealing with construction operations governed by these specifications, the following words and terms or pronouns in place of them shall each be construed, respectively, as follows:

1.01 OWNER, OR CITY

The City of Seattle, a municipal corporation of the State of Washington, shall include any or all of its duly constituted agencies, officers or employees acting in an official capacity in performance of lawful duties.

101A BOARD OF PUBLIC WORKS (New Section)

That official Board of Public Works as defined and established by Article VII of the Charter of the City of Seattle.

1.02 ENGINEER

An inclusive term for the executive officer of the Engineering Department of the City of Seattle, or executive officer of another department when such other department plans and supervises public construction for the Board of Public Works in accordance with Article VII of the Charter of the City of Seattle.

1.03 CONSULTING ENGINEER 1

1.04 INSPECTOR 1

1.05 SPECIFICATIONS 1

1.06 SPECIAL PROVISIONS 1

1.07 SUPPLEMENTAL SPECIFICATIONS 1

1.08 PLANS 1

1.09 BIDDER 1

1.10 PROPOSAL 1

1.11 PROPOSAL GUARANTY, BID BOND 1

1.12 CONTRACT 1

1.13 AMOUNT OF CONTRACT 1

1.14 CONTRACTOR 1

1.15 SUBCONTRACTOR 1

1.16 CONTRACT BOND, PERFORMANCE BOND 1

1.17 SURETY 1

1.18 WORK 1

1.19 DAYS 1

1.20 LIQUIDATED DAMAGES 1

1.21 "OR EQUAL" 1

1.22 ABBREVIATIONS 2

1.23 HIGHWAY, STREET, ROAD OR ALLEY 2

1.24 ARTERIAL STREET 2

1.25 RIGHT OF WAY, EASEMENT 2

1.26 ROADWAY 2

1.27 SUBGRADE 2

1.28 SURFACING

The top layer of a specified type of mineral aggregate or bituminous mixture placed on the traveled roadway area, as a bearing surface, or as a protection against erosion.

1.29 TRAVELED WAY 2

1.30 PAVEMENT

A structurally sound and complete covering of a traveled roadway area with material or materials in such combinations that they will produce a roadway surface structure which is impervious to water and capable of supporting without failure that vehicular traffic appropriate to the classification of the particular street for a minimum period of twenty (20) years before major restoration is required.

In the case of flexible base pavement, the term "pavement shall also include the bituminous wearing layer which, if placed by itself, would be termed "surfacing."

1.31 BRIDGE 2

1.32 CULVERT 2

1.33 TRAFFIC (New Section)

Pedestrians, ridden or herded animals, vehicles or other conveyances, either singly or together, while using any street for purposes of travel.

1.34 TRAFFIC CONTROL DEVICES (New Section)

Fixed or portable signs, signals, street lights, barricades, guard rails, pavement markings, channelization and other equipment or materials used for the purpose of regulating, warning or guiding traffic.

1.35 WORK PAYMENT BY BID ITEMS (New Section)

Whenever reference is made in these specifications by any of these means of measurement for contract work:

(a) Per linear foot.
(b) Per square yard.
(c) Per cubic yard.
(d) Per each.
(e) Per pound.
(f) Per ton.
(g) Per acre.
(h) Ft. B. M.
(i) Lump Sum.
(j) Any other unit.

As to how payment will be made for work performed by the Contractor, it shall be understood to mean that the Contractor's unit bid price at the specified unit of measurement, in dollars and cents for each item of the contract work as it is exactly described in words in the contract proposal for such work, shall be in full for all labor, material, equipment, tools and any other work necessary of whatever nature it may be to complete the above work item as described in accordance with the construction plans and these standard specifications and as may be otherwise modified by the special provisions. No other payment will be made except it shall be authorized by the Engineer, subject to the approval of the Board of Public Works.

Section 2—Proposal Requirements and Conditions

2.01 CONTENTS OF PROPOSAL FORMS 2

2.02 EXAMINATION OF PLANS, SPECIFICATIONS AND SITE OF WORK 2

2.03 INTERPRETATION OF CONTRACT DOCUMENTS 2

2.04 QUANTITIES AND UNIT PRICES 2

2.05 QUALIFICATION OF BIDDERS (Not Used) 2

2.06 PREPARATION OF PROPOSAL

Each bid shall be made on the forms furnished by the City and shall be signed by the bidder with the signature in full. If the proposal is made by a partnership, it shall contain the names of each partner and shall be signed in the firm name, followed by the signature of the person

authorized to sign. If the proposal is made by a corporation, it shall be signed in the name of the corporation by the officer or officers having authority to sign contracts. The address of the bidder shall be typed or printed on the proposal.

A unit price shall be submitted on each and every item of work included in the group or division of which bids are requested. Any omission of prices on such items shown in the proposal forms or any addition in writing to the form of the bid, shall be cause for rejection of the proposal.

Each proposal shall specify a unit or lump sum price, typed or written with ink in both words and figures, for each of the separate items as called for. In case of discrepancy between the written words and figures, the written words shall govern.

2.07 DELIVERY OF PROPOSAL 3

2.08 WITHDRAWAL OR REVISION OF PROPOSAL 3

2.09 SUPPLEMENTAL PROPOSALS 3

2.10 PROHIBITION OF ALTERATIONS

Except as otherwise provided herein, proposals which are incomplete in any way, or which contain unauthenticated erasures, alterations or items not called for in the proposal shall be rejected.

The proposal form invites bids on definite plans and specifications. Only the amounts and information asked for on the proposal form furnished will be considered as the bid. Each bidder shall bid upon the work exactly as specified and as provided in the proposal form. The bidder may bid upon all alternates indicated on the proposal form as provided therein. When bidding on an alternate for which there is no charge, the bidder shall write the words "No Charge" in the space provided on the proposal form.

No oral or telephone proposals or modifications will be considered.

2.11 OPENING OF PROPOSALS

At the time and place set for the opening and reading of the proposals as indicated in the call for bids, each and every proposal (except any which may have been withdrawn in accordance with Section 2.08), or which are not in accordance with those required for preparation of the proposal in accordance with this Section 2, received prior to the scheduled closing time for receipt of proposals, will be publicly opened and read aloud.

2.12 REJECTION OF PROPOSAL

The City reserves the right to reject bids in accordance with Article VII, Section 15 of the City Charter.

2.13 PROPOSAL GUARANTY 3

2.14 FAMILIARITY WITH LAWS AND ORDINANCES 3

Section 3—Award and Execution of Contract

3.01 AWARD OF CONTRACT

The award of contract shall be to the lowest bidder whose bid conforms to the requirements of Section 2.11.

3.02 RETURN OF PROPOSAL GUARANTY

After the bids have been tabulated and compared, the Board of Public Works will return the guaranty deposits to all but the successful bidder. His deposit shall be retained pending execution of the contract and the bond therefor.

3.03 EXECUTION OF CONTRACT 3

3.04 PERFORMANCE BOND, CONTRACT BOND 3

3.05 FAILURE TO EXECUTE CONTRACT

Upon failure to enter into the contract and furnish the necessary bond within the time specified in Section 3.03, the proposal guaranty which accompanied the bid, whether in form of a bond or check, shall be forfeited to the City and credited to the improvement. The Board of Public Works shall then readvertise for proposals for such work. Neither the Board of Public Works nor the City Council may remit such forfeiture of proposal guaranty.

3.06 NON-COLLUSION AFFIDAVIT 4

3.07 CONTRACTOR'S INSURANCE 4

3.07A Compensation Insurance 4

3.07B Public Liability and Property Damage Insurance

The Contractor shall obtain and keep in force during the term of the contract, public liability and property damage insurance in companies and in form to be approved by the City. Said insurance shall provide coverage to the Contractor, any subcontractor performing work provided by this contract, and the City. The City shall be named as an additional insured on said policy insofar as the work and obligations performed under the contract are concerned. The coverage so provided shall protect against claims for personal injuries, including accidental death, as well as claims for property damages which may arise from any act or omission of the Contractor or the subcontractor, or by anyone directly or indirectly employed by either of them.

The minimum policy limits of such insurance shall be as follows:

Bodily injury liability coverage with limits of not less than $100,000 for bodily injury, including accidental death, to any one person, and subject to that limit for each person in an amount not less than $300,000 for each accident; and property damage coverage in an amount of not less than $50,000 for each accident.

A copy of the insurance policy, together with a copy of the endorsement naming the City as an additional insured, shall be provided to the City within a reasonable time after receiving notice of award of contract.

Whenever higher limits of insurance are required, the special provisions shall prescribe those limits.

3.07C Indemnify Owner From Loss 4

3.07D Street Obstruction Bond 4

3.08 PROOF OF CARRIAGE OF INSURANCE (Not Used) 4

Section 4—Scope of Work

4.01 INTENT OF CONTRACT 4

4.02 ADDITIONAL INSTRUCTIONS 4

4.03 INCREASE OR DECREASE OF WORK

The City reserves the right to make such alterations in the plans or in the quantities of work as may be considered necessary. Such alterations shall be in writing by the Engineer and shall not be considered as a waiver of any conditions of the contract nor to invalidate any of the provisions thereof; provided, however, that the execution of a supplemental agreement acceptable to both parties of the contract will be necessary before any alteration is made which involves (1) an extension or shortening of the length of the project by more than 25%, (2) an increase or decrease of more than 25% of the total cost of the work calculated from the original proposal quantities and the unit contract prices, or (3) an increase or decrease of more than 25% in the quantity of any one major contract item.

For condition (3) above, a major item is defined as any item, unless otherwise indicated on the plans or designated in the special provisions, the contract price for which amounts to 10% or more of the total contract price as determined by the original quantities and the unit contract prices.

When an alteration requires the execution of a supplemental agreement, the agreement shall be fully executed before any work on the alteration is started. Alterations involving an increase of more than 25% in the net of any one minor contract item will not require a supplemental agreement.

When test piles are specified, the quantities for furnishing or driving of the various types of foundation or trestle piling will be increased or decreased as necessary to satisfy the results indicated by the test piles. Conditions (1), (2), and (3) above will not apply to these items and any change in quantity in excess of 25% will not require a supplemental agreement regardless of length or number of piles furnished or driven.

4.04 EXTRA WORK 5

4.05 CHANGED CONDITIONS 5

4.06 WASTE SITES

The various sections of these specifications require three different types of waste sites which are: (1) private property abutting the improvement, (2) waste sites designated on construction plans, and (3) waste sites to be provided by the Contractor.

In all cases, waste sites shall be operated in such a manner as to meet safety and health requirements of state, county and city. Sites, operations, or the result of such operations, which create a definite nuisance problem, or which result in damage to public or private properties will not be permitted.

4.06A Private Property Abutting the Project

Waste excavation not needed for the contract embankments or other backfill purposes shall be equitably distributed among those private properties abutting the project which are assessed for the cost thereof, the owners of which have made proper application for such waste earth to the Engineer and have obtained a grading permit when necessary. The Contractor shall haul and dump the waste material a maximum distance of thirteen hundred (1300) feet at no expense to the property owner or the City, anytime before the Contractor's excavation operations are completed for the project and waste earth is available. Hauls in excess of thirteen hundred (1300) feet shall be at the expense of the property owner who shall make the necessary arrangements with the Contractor for payment.

The waste material shall be hauled to the property and dumped as the owner may direct, except that no leveling or dressing will be required of the Contractor other than as may be necessary by him to provide suitable hauling access to the property for delivery by dumping. Where conditions are such on the private property as to require additional work on the private property such as clearing and grubbing, leveling and shaping before depositing the waste material upon the property, the owner shall make the necessary arrangements with the Contractor for payment of such additional work.

4.06B Waste Sites Designated on the Construction Plans 5

4.06C Waste Sites to be Provided by the Contractor 5

4.07 SALVAGE

If required by the plans or in the special provisions, all castings, pipe and any other material of any value taken from any of the discarded facilities shall be carefully salvaged and delivered to the City in good condition and in such order of storage as the Engineer may direct; otherwise, such material shall belong to the Contractor and he shall remove it from the job site.

4.08 FINISHING AND CLEANUP 5

4.09 PROTESTS (New Section)

If the Contractor considers any work demanded of him to be outside the requirements of the contract, or considers any record or ruling of the Engineer to be unfair, he shall immediately, upon such work being demanded or such record or ruling being made, proceed without delay to perform the work or to conform to the record or ruling, and within twenty (20) days after date of receipt of the instructions, record or ruling, he shall file a written protest with the Engineer, stating clearly and in detail the basis of his objection, and include an itemized statement of any extra costs which may have resulted. Except for such protests or objections as are made of record in the manner herein specified and within the time limit stated, the records, rulings, instructions or decisions of the Engineer shall be final and conclusive.

Section 5—Control of Work

5.01 AUTHORITY OF ENGINEER 5

5.02 AUTHORITY AND DUTIES OF INSPECTORS

The Engineer may appoint assistants to inspect all materials used and all work done. Such inspection may extend to any or all parts of the work and to the preparation or manufacture of the materials to be used. The assistants will not be authorized to revoke, alter, enlarge or relax the provisions of these specifications. An assistant is placed on the work to keep the Engineer informed as to the progress of the work and the manner in which it is being done; also to call the attention of the Contractor to any infringements upon plans, or specifications, but failure of the assistant or the Engineer to call the attention of the Contractor to faulty work or infringements upon the plans or specifications shall not constitute acceptance of said work.

An assistant will not be authorized to approve or accept any portion of the work or to issue instructions contrary to the plans and specifications. The assistant will have authority to reject defective material and to suspend any work that is being improperly done, subject to the final decision of the Engineer. The assistant will exercise such additional authority as may, from time to time, be especially delegated to him by the Engineer.

5.03 COOPERATION BY CONTRACTOR

A set of approved plans, specifications and any special provisions and authorized alterations will be supplied to the Contractor and these must be kept available on the job at all times. The Contractor shall study all approved plans, specifications, special provisions and alterations and inform the Engineer immediately of any error, inconsistency or omission which may be discovered therein. The Contractor shall be present at the work site either in person or by duly authorized representatives, whenever any work is being performed. The Contractor or his representative shall receive from the Engineer all explanations and directions necessary for the satisfactory prosecution and completion of the work. The Contractor shall not cause any unnecessary delays or hindrance to other Contractors on the work, but he shall be required to cooperate with other Contractors to the fullest extent.

5.04 INTERFERENCE WITH OTHER CONTRACTORS

Bidders are required to inform themselves fully of the conditions relating to construction and labor under which the work will be or is now being performed, and the Contractor shall employ, as far as possible, such methods and means in carrying out of his work as will not cause any interruption or interference with any other Contractor or agency.

If the performance of any contract for the project is likely to be interfered with by the simultaneous execution of some other contract or contracts, the Engineer shall decide which Contractor shall cease work temporarily and which Contractor shall continue, or whether work under the contracts can be coordinated so that the Contractors may proceed simultaneously. The City shall not be held responsible for any damages suffered or extra costs incurred by the Contractor, resulting directly or indirectly from the award or performance or attempted performance of any other contract or contracts on the project, or caused by any decision or omission of the Engineer respecting the order of precedence in the performance of the contracts. Cessation of work at the direction of the Engineer shall be founds for an extension of time.

5.05 NOTIFICATIONS RELATIVE TO CONTRACTOR'S ACTIVITIES 6

5.06 ENGINEERING, LOCATIONS, LINE AND GRADE
(Title changed for City use)

The Engineer shall perform all engineering functions in connection with contract work except as otherwise specified herein. Engineering functions performed by the Engineer are not a part of the contract price as defined in Section 1.13, and no payment therefor will be made to the Contractor. Engineering functions include, but are not limited to the design, preparation of plans, inspection, supervision and field layout work.

The Engineer shall establish and stake out control points for the various parts of the work for locations, lines and grades as are necessary for the proper construction and will prepare grade sheets relative thereto for the Contractor's use. The Contractor shall transfer the lines and grades from the control points set by the Engineer to his own work.

For grading or other contract work involving earth excavation or embankments where the side slopes thereof are to be neatly dressed to specified slope angles (inclination), the Engineer will establish slope control stakes for the Contractor's reference along the top line or bottom line of the proposed excavation or embankment fill from which the Contractor shall make all his control measurements for dressing the slope to the required inclination. Measurement by the Contractor shall be from the horizontal red line marked on the stakes by the Engineer and not from the surface of the ground at the stake.

For structure work such as bridges, piers, towers, dams, etc., where high above ground level control points are to be set, the Contractor shall provide sufficient and safe facilities to enable the Engineer to set the control points.

All marks, bench marks, reference points and stakes set by the Engineer for the construction control of the project work shall be carefully preserved by the Contractor and in the event of their destruction by him or his employees before their purpose is accomplished, the full cost of replacement will be at the Contractor's expense.

No claim for extra compensation shall be allowed or considered for any extra work that may be claimed by the Contractor to remove and reset or to remove and reconstruct any work found to be in error and claimed by the Contractor to be due to an error in the Engineer's line and grade, unless the original control points set by the Engineer from which the Contractor worked still exist or other substantiating evidence satisfactory to the Engineer shall be produced by the Contractor.

The Contractor throughout the construction period shall keep the Engineer informed in advance of the time and place at which he intends to do work, in order that the necessary engineering control points, lines and grades may be furnished by the Engineer with a minimum of delay towards completion of the work.

Should the Contractor's working operations, at the time the Engineer is informed of the proposed work by the Contractor, be such as to handicap the setting of the necessary engineering control for the Contractor by the Engineer, the Contractor shall suspend his working operations as may be necessary for a time sufficient for the Engineer to complete the engineering work. All costs resulting to the Contractor for rescheduling his work or suspending work as described shall be included in the various bid items of the contract.

5.07 REMOVAL OF DEFECTIVE OR UNAUTHORIZED WORK 6

5.08 MOVING OF PUBLIC AND PRIVATE UTILITIES 6

5.09 PROTECTION OF PUBLIC AND PRIVATE UTILITIES 6

5.10 DAMAGE TO EXISTING IMPROVEMENTS AND UTILITIES 7

5.11 INSPECTION BY ENGINEER 7

5.12 MAINTENANCE OF WORK AFTER ACCEPTANCE 7

5.13 WATER AND POWER 7

5.13A Water for Construction (New section)

Water used by the Contractor from Seattle Water Department mains or hydrants for water-settling earthwork, backfill in trenches and excavations, mixing and curing concrete, will be furnished free of charge to the Contractor. Payment to the Water Department for such water will be made from the project funds at the following rates:

(1) *Watersettling:*
- (a) Earthwork, per 200 cubic yards 1.40
- (b) Trench backfill:
  - Watermains, per lienear foot 0.005
  - Sewers, per linear foot 0.01

(2) *Mixing Concrete on Job Site:*
- Sidewalk—up to 6-inch thickness: per 100 square yards 0.50
- Pavement—6¼ inches and more in thickness 0.75
- Structures—Cubic yards converted to square yards 6-inches thick, per 100 square yards 0.50

(3) *Curing Concrete:*
- Standard Cement, per square yard 0.02
- High-early-strength Cement, per square yard 0.01

The yardage of earth for which the charge for water for watersettling in (1) above is made shall be based upon the total volume of earth to be watersettled in accordance with the contract specifications or as otherwise directed by the Engineer, and no deduction of any kind shall be made for any effect which ground water or rain water may have relative to the watersettling.

Water used by the Contractor for other purposes than those above, unless otherwise provided in the general and special provisions, shall be paid for by the Contractor at current rates, or a special rate as may be fixed by the Water Department when the Contractor makes his application for water. Such water shall be measured as required by the Water Department.

5.13B Water from Hydrants (New Section)

A permit from the Seattle Water Department is required before any hydrant may be used as a source of water. Only tools approved by the Water Department shall be used and each hydrant to be used by the Contractor shall be inspected by the Water Department for proper operation before the Contractor uses it. No charge will be made for this first inspection. Upon completion of the work, all hydrants used by the Contractor during the contract work shall be reported to the Water Department by the Engineer and each shall be reinspected. This later inspection shall be charged to the Contractor. The Water Department shall repair any damage discovered and shall charge the Contractor the cost of such repairs.

Hydrants are designed for operation with the main hydrant valve in the full open position. The main hydrant valve shall not be used to throttle or regulate the rate of flow. Before obtaining water for construction purposes from hydrants, the Contractor shall install an auxiliary slow-acting gate valve on the hydrant outlet port to be used. This valve shall be tightly closed until the hydrant valve is opened completely. Water flow from the hydrant shall be regulated by this auxiliary valve. When shutting down the hydrant, the auxiliary valve shall be closed tightly before closing the hydrant valve.

5-13C Payment for Water Department Work (New section)

The cost of work performed by the Seattle Water Department for the benefit of any construction project shall be distributed as follows:

5.13C1 Contractor (New section)

The Contractor shall pay for:

1. Final inspection of and making any necessary repairs to hydrants after completion of the project work, as specified above in Section 5.13B.
2. The repair of Water Department services or mains injured by the Contractor when such services or mains are in the assigned location and at proper depth on graded streets; or in accordance with Section 5.09; or where the services or mains are located ahead of time by the Water Department.

3. The repair by the Water Department of private services broken by the Contractor unless the Engineer determines that the cost of such repairs shall be charged to the project.

5.13C2 Improvement Fund (New section)

The improvement construction fund shall pay for:

1. Water used for construction purposes as specified in Section 5.13A.
2. Adjusting or relaying, but not renewing, services or mains which have been installed in authorized locations, and such adjustment is made necessary by reason of regrading, change in alignment or change in street width.
3. Making connections of new mains to an existing main, or a new main installed by the Contractor with an extension thereto.
   The Water Department will supply a piece of tested pipe for making final connection and do the necessary excavation to remove the last plug of dirt.
   The Contractor will supply the special fittings and pay for the tested pipe and any other materials needed on the connection. The Contractor shall be available to help on connections sixteen (16) inches and larger.
4. Cutting and providing all water services and providing temporary service where necessary to permit the passage of a trenching machine for sewer, side sewer and catch basin construction.
5. Providing temporary service when necessary on watermain construction and cutting and reconnecting services that interfere with alignment of new main.
6. Providing temporary service when necessary on grading and other improvement or ordinance projects.
7. Furnishing and installing all necessary corporations to new mains for testing, flushing, filling, blowoffs, air release, etc.
8. Relaying or replacing private services where removal is necessitated by construction.
9. Adjusting watermains at request of Engineering Department.
10. Hydrant posts supplied by Water Department.
11. Replacement of all concrete meter boxes removed and/or relocated as a requirement of the project. Replacement of concrete meter boxes removed and/or relocated as a convenience to the Contractor or at his expense as a repair of Water Department services under provisions of paragraph A.2 hereof.

5-13C3 Water Department (New Section)

The Water Department shall assume the cost of:

1. Adjusting and replacing Water Department services or temporary mains which have been installed in ungraded or in graded streets at other than authorized grades, or which have been installed in alleys or other unauthorized locations, when such adjustment or replacement is necessitated by grading or other street improvements.
2. Transferring or replacing obsolete water services prior to paving.
3. Repairing Water Department services or temporary mains which have been installed in ungraded streets or in graded streets at unauthorized locations or grades and are not shown on the plan or have not been located in the field by the Water Department.

5.13D Notice to Water Department (New Section)

Before starting construction for sewers, watermains, grading, paving or other work, where Water Department services or mains are present and will be involved with the proposed contract work, the Contractor shall give reasonable notice to the Engineer and Water Department, prior to the start of work. This notice shall be sufficient to permit a meeting to be held with the Contractor, Engineer and Water Department to coordinate work schedules.

5.14 METHOD OF SERVING NOTICE 7

5.15 VERBAL AGREEMENTS 7

5.16 FINAL INSPECTION (Not used) 7

Section 6—Control of Materials

6.01 SOURCE OF SUPPLY AND QUALITY OF MATERIALS 7

6.02 SAMPLES AND TESTS

All tests of materials furnished by the Contractor shall be made by the Engineer in accordance with commonly recognized standards of national organizations, and such special methods and tests as are in use at the Testing Laboratory of the Seattle Engineering Department, or as set forth in the special provisions.

Field tests of materials will also be made by the Engineer when deemed necessary and these tests shall be made in accordance with standard practices of the Seattle Engineering Department.

The Contractor shall furnish without charge such samples of all materials as may be requested by the Engineer. Materials shall not be used until they have been approved by the Engineer. Samples will be secured and tested whenever necessary to determine the quality of the material.

Materials shall be delivered on the work in advance in such quantities as to afford the Engineer an opportunity to make tests before the materials are to be used.

The following shall apply in the use of specifications and methods of tests of the organizations named below:

ASTM—American Society for Testing Materials. The ASTM designation number refers to the latest adopted standard or tentative standard in this society. The standard or tentative standard in effect at the time of call for bids shall apply in each case. Revisions shall be considered as becoming effective on the first day of December in the year in which they are adopted.

AASHO—American Association of State Highway Officials. The specifications or test method shown by number refers to the "Standard Specifications for Highway Materials and Methods of Sampling and Testing," currently published by the association, or to such revisions as may have been subsequently adopted by the association. Revisions in effect at the time of call for bids shall apply. Revisions shall be considered as becoming effective sixty days after announcement of adoption is published in the "Annual Reports of the Permanent Committees" of the Association.

AWWA—American Water Works Association. The effective date of the AWWA specifications is on the first day of the second month after publication in the American Water Works Journal. The AWWA specifications and revisions thus in effect at the time of the call for bids shall apply whenever referenced in these specifications.

Federal Specifications—U. S. Government Federal Stock Catalogue. The specifications number refers to the latest revised specifications adopted by the Federal Specifications Board. Revisions in effect at the time of call for bids shall apply. Revisions shall be considered as becoming effective sixty days after adoption by the Board.

PUBLICATIONS:

Copies of any separate ASTM specifications or method of testing may be obtained from the American Society for Testing Materials, 1916 Race Street, Philadelphia 3, Pennsylvania.

Copies of "Standard Specifications for Highway Materials and Methods of Sampling and Testing" may be obtained from the American Association of State Highway Officials, 917 National Press Building, Washington, D.C.

Copies of standard timber grading and dressing rules may be obtained from the West Coast Lumber Inspection

Bureau, Seattle, Washington, or Portland, Oregon, and from the Western Pine Association, Portland, Oregon.

Copies of American Standard Specifications, A.W.W.A. specifications may be obtained from the American Water Works Association, Inc., 2 Park Avenue, New York 16, New York.

Copies of Federal Specifications may be obtained from the Business Service Center, Room 101, Federal Office Building, Seattle 4, Washington.

6.03 SPECIAL METHODS OF TEST

The methods of tests which follow shall apply when so designated elsewhere in these specifications or in the special provisions. Details of test methods are available from the Materials Laboratory of the Seattle Engineering Department.

1. *Stabilometer Resistance Value and Swell Pressure Test:* The resistance value (R-value) is measured by the stabilometer test which is a form of triaxial test. The test is performed on untreated or treated soils or aggregates for use as subgrades, subbases, or bases. The test result is reported as an R-value on a scale from 0 to 100 which is a numerical index of the ability of the material to resist plastic deformation under vehicle loads.
2. *Test for Moisture Retaining Effectiveness of Concrete Curing Compounds:* This test measures the ability of concrete curing compounds to prevent loss of water from a fresh concrete mixture made under definite specified conditions.
3. *Modified Immersion-Compression Test:* The modified immersion-compression test measures the degree to which a compacted bituminous specimen resists the action of water. The test is performed by soaking a compacted briquette 4 inches in diameter and 2½ inches high in water at 140° F., for 24 hours. The ratio of the stabilometer value of the soaked specimen to the stabilometer value of a companion specimen that has not been soaked is the measure of the resistance of the material to water action.
4. *Mortar Strength Test:* The mortar strength test is a procedure to determine the strength developed by mortar using a given concrete sand in relation to that developed by mortar using Ottawa sand. The test indirectly measures the concrete making properties of the sand under test.
5. *Sand Equivalent Test:* The sand equivalent test indicates the proportion of detrimental fine dust or clay-like materials in soils or fine aggregates.
6. *Test for Effectiveness of Concrete Waterproofing Materials:* The test for effectiveness of concrete waterproofing materials measures the ability of those materials to prevent moisture absorption by concrete specimens under stabilization test conditions.
7. *Stabilometer Test (Asphalt Concrete Mixtures):* The stabilometer test is a form of triaxial test employing compacted test specimens of asphalt concrete mixtures having a height-diameter ratio of approximately 0.6. The results are reported as stabilometer values in units on a scale ranging from 0 to 100, indicating the relative ability of the pavement to resist distortion under the action of traffic.
8. *Cohesiometer Test (Asphalt Concrete Mixtures):* The cohesiometer test is a measure of the cohesive resistance or tensile strength of a compacted asphalt concrete mixture.
9. *Thin Film Oven Test:* The thin film oven test is a method of determining the amount which an asphalt changes when subjected to prolonged elevated temperature.
10. *Penetration Ratio:* The penetration ratio is the ratio of the penetration at 39.2° F. to that a 77° F., and is a means of determining the effect of low temperatures on the characteristics of the asphalt.

6.04 STORAGE OF MATERIALS 8

6.05 DEFECTIVE MATERIALS 8

6.06 SIEVES FOR TESTING PURPOSES 8

Section 7—Legal Relations and Responsibility to the Public

7.01 MUNICIPAL REGULATIONS AND STATE LAWS 8

7.02 CONTRACT BOND, PERFORMANCE BOND 8

7.03 ACCIDENT PREVENTION

Precaution shall be exercised at all times by the Contractor for the protection of persons, employees and property. The safety provisions of applicable laws and local building and construction codes shall be observed. The operations of the Contractor for the protection of persons, and for guarding against hazards of machinery and equipment, shall meet the requirements of state law and all safety regulations as set out in "Safety Standards for Construction" and "General Safety Standards," published and in effect at the time of call for bids. These publications may be obtained from the Department of Labor and Industries, Olympia, Washington.

7.04 PROTECTION OF WORKMEN AND PROPERTY 9

7.05 LABOR 9

7.06 SELECTION OF LABOR (Chapter 246, Laws of 1943, RCW Chapter 39.16)

In all contracts awarded by the City for the erection, construction, alteration, demolition or repair of any public building, structure, bridge, highway or any other kind of public work or improvement, the Contractor, subcontractor or person in charge thereof, shall employ ninety-five (95) per cent or more bona fide Washington residents as employees where more than fifty (50) persons are employed, and ninety (90) per cent where fifty (50) or less are employed. The term "resident" as used in this act shall mean any person who has been a bona fide resident of the State of Washington for a period of ninety (90) days prior to such employment, *provided*, that in contracts involving the expenditure of Federal-aid funds this act shall not be enforced in such a manner as to conflict with or be contrary to the Federal statutes, rules and regulations prescribing a labor preference or discrimination among the citizens of the United States.

In the event that a sufficient number of Washington residents shall not be available, the Contractor or subcontractor shall immediately notify the Engineer and shall state the number of non-residents needed. The Engineer shall immediately investigate the facts and report it to the Board of Public Works and if the conditions are as stated, the Board of Public Works may, by written order, designate the number of non-residents and the period for which they may be employed, *provided*, that should residents become available within the period, such residents will be immediately employed and the period shortened consistent with the supply of residential labor.

The provisions of this act shall be written into every such public contract including the following penalty: Any Contractor or subcontractor who shall employ a non-resident in excess of the percentage preferences, excepting as herein permitted, shall have deducted from the amount due him for every violation, the prevailing wages which should have been paid to a displaced resident. The money so deducted shall be retained by the public body for whom the contract is being performed.

Any person, firm or corporation violating any of the provisions of this act shall be guilty of a misdemeanor.

7.07 LEGAL WAGES ON PUBLIC WORKS 9

7.07A Hours of Work (New Section)

In all public works done by or for the City, either by day or by contract, no employee of the City, or of any contractor or any subcontractor of such work shall be required, except in case of emergency, to work longer than eight hours, in one calendar day.

No construction work shall be done by the City on any legal holiday or Sunday; nor shall any work be done on any such day, or after seven o'clock p.m. and before six o'clock a.m. of any other day, upon or over any street or other public place, except in case of emergency, upon written permit of the Board of Public Works, wherein the fact of such emergency, and nature thereof shall be specified.

7.08 PAYMENT OF BILLS (Title changed for City use)

7.08A Failure to Pay for Labor and Materials (New Section)

If, at any time the Contractor fails to pay the subcontractor or the laborers employed upon the work, or fails to pay for the materials used therein, the City may withhold from the money which may be due the Contractor under this agreement such amount or amounts as may be necessary for the payment of such subcontractors, laborers or materials, and may, acting as agent for the Contractor, apply the same to such payments and deduct the same from the final estimate of the Contractor. This provision is intended to protect the subcontractors and laborers employed upon the work and the parties who may be furnishing the materials to be used herein.

7.08B Bills of City Departments—How Paid (New Section)

The project fund shall pay all approved bills of City departments for services performed for the benefit of the project.

Bills of City departments for which the Contractor is liable, also all fees or excise taxes due the City by reason of the contract, shall be promptly paid by the Contractor, and if not so paid, shall be deducted from any money due or to become due the Contractor.

7.09 STATE SALES TAX 10

7.10 PERMITS AND LICENSES 10

7.11 ROYALTIES AND PATENTS 10

7.12 USE OF PREMISES 10

7.13 CONFINE OPERATIONS WITHIN RIGHTS OF WAY AND EASEMENTS 10

7.14 SAFEGUARDS 10

7.14A Warning Lights and Barricades (New Section)

It shall be unlawful for anyone, in any manner, to obstruct, excavate or tear up any public place, without at all times during the hours of darkness maintaining at the point of obstruction or excavation, a barricade and four or more red or flashing amber lights of sufficient power and brilliancy and so placed as to be plainly visible for a distance of not less than five hundred (500) feet along the public way from the point of such obstructions. Obstructions in public places during daylight hours shall have sufficient barricades posted in such a manner as to indicate plainly the danger involved. Barricades may be removed at the completion of the work or the removal of obstructions in public places providing the surface of the roadway has been restored as required and approved by the Engineer.

Adequate advance warning lights and barricades must be posted on all obstructions in any arterial street as defined in the traffic code of the City of Seattle.

The Engineer is hereby authorized to place barricades and warning lights at unguarded or inadequately guarded excavations, obstructions or other dangerous conditions existing in any public place and anyone causing or permitting such condition shall pay the cost of such barricading and lighting by the City at the rate and under the conditions established by ordinance.

The Engineer's judgment shall be final as to the number and adequacy of lights or barricades at all obstructions and excavations.

7.14B Unlawful Acts (New Section)

It shall be unlawful to deface, move, injure, damage, alter or remove any barricade or light placed at or near any obstruction or defect in the street, or sign, or barricade or light posted to obstruct the passing of vehicles.

7.15 MAINTENANCE OF TRAFFIC 10

7.15A Division of Responsibility 10

7.15B Street Closures or Partial Closures 10

7.15C Notifications 10

7.15D Existing Traffic Signs and Facilities 10

7.15E Detours 10

7.15F Local and Emergency Traffic 10

715G Protection of Pedestrian and Vehicluar Traffic

The Contractor shall take every precaution to protect pedestrian and vehicular traffic. Wherever, in the opinion of the Engineer, the Contractor has not provided sufficient or proper safety precautions and safeguards, he shall do so immediately and to whatever extent the Engineer deems advisable. If the Contractor fails to comply with the Engineer's instructions, the Engineer shall cause the necessary action to be taken to protect the public and shall charge the Contractor for the costs thereof by deducting same from money due the Contractor on the next estimate. Procedure for taking this action shall be as provided in the special provisions.

7.15H Restriction of Parking 11

7.15I Flagmen 11

7.15J Temporary Barricades (New Section)

Whenever the standard specifications require that the project area be closed to traffic for a definite length of time or for a period as directed by the Engineer, the Contractor shall completely barricade the street, alley, driveway, or other access place leading to the project with barricades as shown on Standard Plan No. 211. No direct payment will be allowed for the furnishing, placing and removal of the barricades as required and all costs therefor shall be incidental to the proposal construction and included in the unit bid prices in the proposal.

7.16 TRAFFIC CONTROL WITHIN AND ABUTTING THE PROJECT 11

7.17 TRAFFIC CONTROL SIGNS 11

7.18 PROCEDURE FOR PROCURING SIGNS 11

7.19 MAINTAINING POSTAL SERVICE 11

7.20 USE OF EXPLOSIVES 11

7.21 RAILROAD CROSSINGS 11

7.22 SANITARY PROVISIONS

The Contractor shall provide and maintain in a neat and sanitary condition such accommodations for the use of his employees as may be necessary to comply with the requirements and regulations of the City of Seattle Health Department and of other bodies or officers having jurisdiction thereover. He shall permit no public nuisance.

7.23 USE AND OCCUPANCY PRIOR TO COMPLETION OF CONTRACT 11

7.24 PERSONAL LIABILITY OF PUBLIC OFFICIALS 11

7.25 NO WAIVER OF LEGAL RIGHTS 11

Section 8—Prosecution and Progress

8.01 CONSTRUCTION SCHEDULE

When requested by the Engineer, the Contractor shall immediately prepare and submit to the Engineer for approval a progress schedule which will insure the completion of the project within the time specified. Adequate equipment and forces shall be made available by the Contractor to start work immediately upon order of the Engineer and to carry out the schedule to completion of the contract within the time specified.

8.02 NOTICE TO PROCEED AND PROSECUTION OF THE WORK 12

8.03 SUSPENSION OF WORK 12

8.04 SUSPENSION OF WORK FOR AN EXTENDED PERIOD 12

8.05 TIME FOR COMPLETION

The improvement contemplated by the contract shall be completed in its entirety within the number of working days, or by definite completion date specified in the special provisions. The contract time shall commence at the time specified in the special provisions.

A working day is defined as any day not otherwise defined herein as a non-working day. A non-holiday day is defined as Saturday, Sunday, a recognized holiday by the special provisions to suspend construction operations, a day on which a suspension order is in effect, or a day on which work is not performed for reasons set forth in Section 8.07. Recognized holidays shall be: January 1st, February 22nd, May 30th, July 4th, Labor Day, Presidential Election day, Thanksgiving Day and December 25th. When any of the above days fall on Sunday, the following Monday shall be counted as a holiday.

A suspension order covering a certain portion of the work only, will affect a working day by the percentage set forth on the suspension order, which percentage is intended to compensate for anticipated time lost in contemplating the contract on the time specified.

The City shall have the right at its discretion to extend the time for completion of the contract. Any extension of time requested by the Contractor for the consideration of the City shall be submitted in writing and shall be accompanied by the written consent to such extension by the surety on the bond.

8.06 DATE OF COMPLETION OF CONTRACT

Upon completion of all work required under the provisions of the contract, the Engineer will advise the Contractor of the date on which all work and materials were considered as being completed. Further requirements shall be as outlined in Section 9.06, Acceptance of Construction.

Notification to the Contractor of the date of completion will not constitute acceptance of the work by the City. The acceptance of the work by the City is further outlined in Section 9.05 and 9.06.

8.07 UNAVOIDABLE DELAYS 13

8.08 FAILURE TO COMPLETE WORK ON TIME—LIQUIDATED DAMAGES 13

8.09 ASSIGNMENT OF CONTRACT AND SUBLETTING (Not Used) 13

8.10 FORFEITURE OF CONTRACT 13

8.11 CONTRACTOR ORGANIZATION, SUPERINTENDENCE AND EQUIPMENT

All machinery and equipment shall be adequate for the purpose used and shall be kept in good workable condition and be operated by experienced operators.

The Contractor shall provide at all times during the progress of the work, competent and necessary superintendence. During the Contractor's absence, the superintendent shall have full authority to execute the orders or directions of the Engineer without delay and to promptly supply such materials, tools, plant equipment and labor as may be required.

All work under the contract shall be performed under the continuous supervision of competent personnel thoroughly experienced in the class of work specified.

Incompetent, carless or negligent employees or agents shall be forthwith discharged by the Contractor upon written request of the Engineer, and failure to comply with such request shall be sufficient grounds for the termination of the contract.

The lack of proper supervision by the Contractor or by his supervisory personnel shall be just cause for termination of the contract, as set forth in Section 8.10.

The Contractor shall be liable for the faithful observance of any instructions delivered to him or to his authorized representatives on the work.

8.12 INJUNCTIONS (New Section)

If the Contractor, or the City, shall be unable to complete any portion or portions of the contract by reason of court proceedings, enjoining the construction or completion of any portion or portions thereof, and if it shall be deemed impractical by the Engineer to construct or complete any other portion or portions thereof, then, and in any such case, the Contractor shall waive any and all claim or claims for damages by reason of such inability to construct such portion or portions of said contract, and the Engineer reserves the right to report such contract completed and file his final estimate thereon as though such improvement had been fully completed, and such Contractor shall accept in full settlement as a cancellation of his contract, a sum of money for labor performed, and for materials furnished, in strict accordance with his bid for such contract, on the basis of the work actually performed or materials and labor actually furnished in said work to the date of stopping thereof. Should the court proceedings allow the work to be resumed prior to the issuance of the notice of completion on said work by the Engineer, then the Contractor, on being so ordered by the Engineer, shall proceed with the work immediately, carrying out the contract in full, according to all original intents, or modifications of the court, as the case may be, at the prices specified in the contract, and no extra payment shall be allowed said Contractor for the change of material or labor or for any other reason.

Section 9—Measurement and Payment

9.01 MEASUREMENT 14

9.02 SCOPE OF PAYMENT

The Contractor shall accept the compensation as herein provided, in full payment for furnishing all materials, labor, tools and equipment necessary to the completed work and for performing all work contemplated and embraced under the contract; also for loss or damage arising from the nature of the work; or from the action of the elements, or from any unforeseen difficulties which may be encountered during the prosecution of the work; also for all expenses incurred in consequence of the suspension or discontinuance of the work as herein specified; and for completing the work according to the plans and specifications.

Neither the payment of any estimate nor of any retained percentage shall relieve the Contractor of any obligation to make good any defective work or material. Payment will be made only for materials actually incorporated in the work. For payment of materials on site, see Section 9.05A, Progress Payments.

The unit contract prices for the various bid items of the contract shall be full compensation for all labor, materials, supplies, equipment, tools and all things of whatsoever nature required for the complete incorporation of the item into the work the same as though the item were to read "In Place," unless the plans and special provisions shall provide otherwise.

9.03 PAYMENT FOR EXTRA WORK 14

9.04 FORCE ACCOUNT

If the Engineer orders in writing the performance of any work not covered by the plans or included in the specifications and for which no item is provided in the contract and for which no unit price or lump sum basis can be agreed upon, then such extra work shall be done and be paid for on a cost-plus (Force Account) basis as follows:

1. For all labor, including such foreman supervision which the Engineer shall deem necessary upon any particular operation, the Contractor shall be paid the wages for each and every person employed upon said work for the actual time worked at the wage rate shown on his payroll filed with the Board of Public Works. The wage

8.02 NOTICE TO PROCEED AND PROSECUTION OF THE WORK 12

8.03 SUSPENSION OF WORK 12

8.04 SUSPENSION OF WORK FOR AN EXTENDED PERIOD 12

8.05 TIME FOR COMPLETION

The improvement contemplated by the contract shall be completed in its entirety within the number of working days, or by definite completion date specified in the special provisions. The contract time shall commence at the time written notice to proceed is given by the Engineer.

A working day is defined as any day not otherwise defined herein as a non-working day. A non-working day is defined as Saturday, Sunday, a recognized holiday by the special provisions to suspend construction operations, a day on which a suspension order is in effect, or a day on which work is not performed for reasons set forth in Section 8.07. Recognized holidays shall be: January 1st, February 22nd, May 30th, July 4th, Labor Day, Presidential Election day, Thanksgiving Day and December 25th. When any of the above days falls on Sunday, the following Monday shall be counted as a holiday. (February 12th, Lincoln's Birthday; October 12th, Columbus Day; and November 11th, Veterans Day are additional holidays for City employees; and if any of these holidays falls on a Saturday or Sunday, the preceding Friday or the following Monday shall be a legal holiday for City employees, only, and are working days with respect to the contract.)

A suspension order covering a certain portion of the work only will affect a working day by the percentage set forth on the suspension order, which percentage is intended to compensate for anticipated time lost in completing the contract in the time specified.

The City shall have the right at its discretion to extend the time for completion of the contract. Any extension of time requested by the Contractor for the consideration of the City shall be submitted in writing and shall be accompanied by the written consent to such extension by the surety on the bond.

8.06 DATE OF COMPLETION OF CONTRACT

Upon completion of all work required under the provisions of the contract, the Engineer will advise the Contractor of the date on which all work and materials were considered as being completed. Further requirements shall be as outlined in Section 9.06, Acceptance of Construction.

Notification to the Contractor of the date of completion will not constitute acceptance of the work by the City. The acceptance of the work by the City is further outlined in Section 9.05 and 9.06.

8.07 UNAVOIDABLE DELAYS 13

8.08 FAILURE TO COMPLETE WORK ON TIME—LIQUIDATED DAMAGES 13

8.09 ASSIGNMENT OF CONTRACT AND SUBLETTING (Not Used) 13

8.10 FORFEITURE OF CONTRACT 13

8.11 CONTRACTOR ORGANIZATION, SUPERINTENDENCE AND EQUIPMENT

All machinery and equipment shall be adequate for the purpose used and shall be kept in good workable condition and be operated by experienced operators.

The Contractor shall provide at all times during the progress of the work, competent and necessary superintendence. During the Contractor's absence, the superintendent shall have full authority to execute the orders or directions of the Engineer without delay and to promptly supply such materials, tools, plant equipment and labor as may be required.

All work under the contract shall be performed under the continuous supervision of competent personnel thoroughly experienced in the class of work specified.

Incompetent, careless or negligent employees or agents shall be forthwith discharged by the Contractor upon written request of the Engineer, and failure to comply with such request shall be sufficient grounds for the termination of the contract.

The lack of proper supervision by the Contractor or by his supervisory personnel shall be just cause for termination of the contract, as set forth in Section 8.10.

The Contractor shall be liable for the faithful observance of any instructions delivered to him or to his authorized representatives on the work.

8.12 INJUNCTIONS (New Section)

If the Contractor, or the City, shall be unable to complete any portion or portions of the contract by reason of court proceedings, enjoining the construction or completion of any portion or portions thereof, and if it shall be deemed impractical by the Engineer to construct or complete any other portion or portions thereof, then, and in any such case, the Contractor shall waive any and all claim or claims for damages by reason of such inability to construct such portion or portions of said contract, and the Engineer reserves the right to report such contract completed and file his final estimate thereon as though such improvement had been fully completed, and such Contractor shall accept in full settlement as a cancellation of his contract, a sum of money for labor performed, and for materials furnished, in strict accordance with his bid for such contract, on the basis of the work actually performed or materials and labor actually furnished in said work to the date of stopping thereof. Should the court proceedings allow the work to be resumed prior to the issuance of the notice of completion on said work by the Engineer, then the Contractor, on being so ordered by the Engineer, shall proceed with the work immediately, carrying out the contract in full, according to all original intents or modifications of the court, as the case may be, at the prices specified in the contract, and no extra payment shall be allowed the Contractor for change in price of material or labor or for any reason whatsoever.

Section 9—Measurement and Payment

9.01 MEASUREMENT 14

9.02 SCOPE OF PAYMENT

The Contractor shall accept the compensation as herein provided, in full payment for furnishing all materials, labor, tools and equipment necessary to the completed work and for performing all work contemplated and embraced under the contract; also for loss or damage arising from the nature of the work; or from the action of the elements, or from any unforeseen difficulties which may be encountered during the prosecution of the work; also for all expenses incurred in consequence of the suspension or discontinuance of the work as herein specified; and for completing the work according to the plans and specifications.

Neither the payment of any estimate nor of any retained percentage shall relieve the Contractor of any obligation to make good any defective work or material. Payment will be made only for materials actually incorporated in the work. For payment of materials on site, see Section 9.05A.

The unit contract prices for the various bid items of the contract shall be full compensation for all labor, materials, supplies, equipment, tools and all things of whatsoever nature required for the complete incorporation of the item into the work the same as though the item were to read "In Place," unless the plans and special provisions shall provide otherwise.

9.03 PAYMENT FOR EXTRA WORK 14

9.04 FORCE ACCOUNT

If the Engineer orders in writing the performance of any work not covered by the plans or included in the specifications and for which no item is provided in the contract and for which no unit price or lump sum basis can be agreed upon, then such extra work shall be done and be paid for on a cost-plus (Force Account) basis as follows:

1. For all labor, including such foreman supervision which the Engineer shall deem necessary upon any particular operation, the Contractor shall be paid the wages for each and every person employed upon said work for the actual time worked at the wage rate shown on his payroll filed with the Board of Public Works. The wage

8.02 NOTICE TO PROCEED AND PROSECUTION OF THE WORK 12

8.03 SUSPENSION OF WORK 12

8.04 SUSPENSION OF WORK FOR AN EXTENDED PERIOD 12

8.05 TIME FOR COMPLETION

The improvement contemplated by the contract shall be completed in its entirety within the number of working days, or by definite completion date specified in the special provisions. The contract time shall commence at the time specified in the special provisions.

A working day is defined as any day not otherwise defined herein as a non-working day. A non-holiday day is defined as Saturday, Sunday, a recognized holiday by the special provisions to suspend construction operations, a day on which a suspension order is in effect, or a day on which work is not performed for reasons set forth in Section 8.07. Recognized holidays shall be: January 1st, February 22nd, May 30th, July 4th, Labor Day, Presidential Election day, Thanksgiving Day and December 25th. When any of the above days fall on Sunday, the following Monday shall be counted as a holiday.

A suspension order covering a certain portion of the work only, will affect a working day by the percentage set forth on the suspension order, which percentage is intended to compensate for anticipated time lost in contemplating the contract on the time specified.

The City shall have the right at its discretion to extend the time for completion of the contract. Any extension of time requested by the Contractor for the consideration of the City shall be submitted in writing and shall be accompanied by the written consent to such extension by the surety on the bond.

8.06 DATE OF COMPLETION OF CONTRACT

Upon completion of all work required under the provisions of the contract, the Engineer will advise the Contractor of the date on which all work and materials were considered as being completed. Further requirements shall be as outlined in Section 9.06, Acceptance of Construction.

Notification to the Contractor of the date of completion will not constitute acceptance of the work by the City. The acceptance of the work by the City is further outlined in Section 9.05 and 9.06.

8.07 UNAVOIDABLE DELAYS 13

8.08 FAILURE TO COMPLETE WORK ON TIME—LIQUIDATED DAMAGES 13

8.09 ASSIGNMENT OF CONTRACT AND SUBLETTING (Not Used) 13

8.10 FORFEITURE OF CONTRACT 13

8.11 CONTRACTOR ORGANIZATION, SUPERINTENDENCE AND EQUIPMENT

All machinery and equipment shall be adequate for the purpose used and shall be kept in good workable condition and be operated by experienced operators.

The Contractor shall provide at all times during the progress of the work, competent and necessary superintendence. During the Contractor's absence, the superintendent shall have full authority to execute the orders or directions of the Engineer without delay and to promptly supply such materials, tools, plant equipment and labor as may be required.

All work under the contract shall be performed under the continuous supervision of competent personnel thoroughly experienced in the class of work specified.

Incompetent, carless or negligent employees or agents shall be forthwith discharged by the Contractor upon written request of the Engineer, and failure to comply with such request shall be sufficient grounds for the termination of the contract.

The lack of proper supervision by the Contractor or by his supervisory personnel shall be just cause for termination of the contract, as set forth in Section 8.10.

The Contractor shall be liable for the faithful observance of any instructions delivered to him or to his authorized representatives on the work.

8.12 INJUNCTIONS (New Section)

If the Contractor, or the City, shall be unable to complete any portion or portions of the contract by reason of court proceedings, enjoining the construction or completion of any portion or portions thereof, and if it shall be deemed impractical by the Engineer to construct or complete any other portion or portions thereof, then, and in any such case, the Contractor shall waive any and all claim or claims for damages by reason of such inability to construct such portion or portions of said contract, and the Engineer reserves the right to report such contract completed and file his final estimate thereon as though such improvement had been fully completed, and such Contractor shall accept in full settlement as a cancellation of his contract, a sum of money for labor performed, and for materials furnished, in strict accordance with his bid for such contract, on the basis of the work actually performed or materials and labor actually furnished in said work to the date of stopping thereof. Should the court proceedings allow the work to be resumed prior to the issuance of the notice of completion on said work by the Engineer, then the Contractor, on being so ordered by the Engineer, shall proceed with the work immediately, carrying out the contract in full, according to all original intents, or modifications of the court, as the case may be, at the prices specified in the contract, and no extra payment shall be allowed said Contractor for the change of material or labor or for any other reason.

Section 9—Measurement and Payment

9.01 MEASUREMENT 14

9.02 SCOPE OF PAYMENT

The Contractor shall accept the compensation as herein provided, in full payment for furnishing all materials, labor, tools and equipment necessary to the completed work and for performing all work contemplated and embraced under the contract; also for loss or damage arising from the nature of the work; or from the action of the elements, or from any unforeseen difficulties which may be encountered during the prosecution of the work; also for all expenses incurred in consequence of the suspension or discontinuance of the work as herein specified; and for completing the work according to the plans and specifications.

Neither the payment of any estimate nor of any retained percentage shall relieve the Contractor of any obligation to make good any defective work or material. Payment will be made only for materials actually incorporated in the work. For payment of materials on site, see Section 9.05A, Progress Payments.

The unit contract prices for the various bid items of the contract shall be full compensation for all labor, materials, supplies, equipment, tools and all things of whatsoever nature required for the complete incorporation of the item into the work the same as though the item were to read "In Place," unless the plans and special provisions shall provide otherwise.

9.03 PAYMENT FOR EXTRA WORK 14

9.04 FORCE ACCOUNT

If the Engineer orders in writing the performance of any work not covered by the plans or included in the specifications and for which no item is provided in the contract and for which no unit price or lump sum basis can be agreed upon, then such extra work shall be done and be paid for on a cost-plus (Force Account) basis as follows:

1. For all labor, including such foreman supervision which the Engineer shall deem necessary upon any particular operation, the Contractor shall be paid the wages for each and every person employed upon said work for the actual time worked at the wage rate shown on his payroll filed with the Board of Public Works. The wage rate shall be exclusive of any and all so-called fringe benefits or other sums not paid directly to the employee. To the sum of such wages, which sum shall also include travel pay if such is allowed by paragraph 4 below, shall be added an amount equal to 20% of said total sum. The amount of 20% herein specified shall be full compensation for indeterminate costs of overhead and profit applicable to labor as distinguished from determinate costs of overhead as described in paragraph 5 below.

2. For all materials deemed necessary by the Engineer, the Contractor shall be paid:

a. The actual cost of such materials, including freight charges but excluding Washington State Retail Sales Tax, all as evidenced by receipted bill, to which cost shall be added an amount equal to 15% of said cost.

b. The Washington State Retail Sales Tax paid upon taxable materials when the project is one for which the City is exempted from payment of the retail sales tax on the cost of the project. On projects for which the City is required to pay the retail sales tax upon the value of the project; i.e., water systems, sanitary sewer systems and sewage disposal facilities, the Contractor is advised that sales to him of necessary materials and supplies are sales for resale and are not subject to the retail sales tax.

3. For all equipment and machine power tools which the Engineer may deem necessary or desirable to use, the Contractor shall be paid:

a. A maximum rental rate at the amount shown in the current schedule of the Washington State Highway Commission "Maximum Hourly Rental Rates for Force Account Work" for each and every hour that said tools and/or equipment are in use on such work, exluding therefrom any and all time that such tools and/or equipment are inoperative because of malfunction or breakdown, and to the sum of the products of said rates and the hours of use shall be added an amount equal to 18% of said sum. The rates in effect at the time of the performance of the force account work are the maximum rates allowable for equipment of modern design in good working condition. The Engineer shall make reductions in these maximum rates when necessary to reflect the actual status of the equipment used as compared to that which would require payment of the maximum rate.

b. The actual cost for necessary transportation in and out of equipment which is not at the job site, provided the Engineer determines that such equipment would not have been required, either at all or at the particular time of the force account work, in the performance of the work under the terms of the contract (except for force account work) and to which actual cost shall be added an amount equal to 18% thereof.

c. The foregoing amounts shall be full compensation for furnishing all equipment, tools, fuel, oil, lubricants, repairs, maintenance and other incidental expenses, except labor for the operation thereof, and except for those items in paragraph 5 below which are applicable in whole or in part to equipment and tools.

4. Whenever a project is located outside the city limits of Seattle and the Contractor is required to pay a travel allowance to his employees, he shall be paid that proportion of the travel allowance which relates to the travel from the city limits to the job site for the proportion of the time spent on force account work, as compared to the time spent on the normal contract work. No travel allowance will be paid by the City for travel within the city limits.

The sum of allowable travel allowances as herein described shall be added to the actual wages paid for the purpose of determining the 20% allowance for overhead authorized in paragraph 1.

5. In addition to the foregoing, the Contractor shall be paid specific sums according to the following schedule of determinate overhead costs, taxes and charges, provided that he has filed with the Board of Public Works a sworn certificate setting forth the rates and charges applicable to him. No payment will be made for any item not covered by the Contractor's certificate. The original certificate shall be filed at the time that the contract is signed. Supplemental certificates may be filed whenever a rate or charge changes and payments made after the supplemental certificate is filed shall be at the new rate.

Determinate Costs	*Basis of Payment*
1. Health and Welfare payments.	*Certified average per cent of actual wages.
2. Pension Fund payments.	*Certified average per cent of actual wages.
3. Apprenticeship Program payments.	*Certified average per cent of actual wages.
4. Liability Insurance Premium.	According to Certificate.
5. Travel Allowance (when allowed).	According to Certificate.
6. Federal Insurance Compensation Act.	Statutory per cent of actual wages.
7. Federal Unemployment Tax Act.	Statutory per cent of actual wages.
8. State Unemployment Compensation Act.	Statutory per cent of actual wages.
9. State Industrial Insurance Premium.	According to Certificate.
10. One-half State Medical Aid Premium.	According to Certificate.
11. State Business and Occupation Tax.	Statutory rate on gross payment.
12. Seattle Business and Occupation Tax.	Ordinance rate on gross payment.
13. Performance Bond Premium.	Certified rate on gross payment.

*When more than one rate or per cent is involved because more than one labor craft is used on the project, the Contractor shall list each craft and certify the rate paid for each. The City will pay the arithmetical average of the certified rates times the total number of hours worked by all crafts.

6. The compensation as heretofore provided shall be payment in full for all work done on a force account basis and shall cover all expenses of every nature, kind and description, including overhead expenses, payments required under the Social Security Act, State Unemployment Compensation Act, Occupational Tax, and any other federal, state or city revenue act, together with all premiums on public liability and property damage insurance policies, use of small tools and equipment for which no rental is allowed, and profits.

7. The Contractor shall submit to the Engineer's office three (3) copies of an itemized statement of force account work. This shall include a detailed explanation of the work, the purpose of the work, and the location, a complete breakdown of labor, materials, equipment and taxes, in accordance with the above provisions. The statements should be submitted to the Engineer not later than two (2) weeks after completion of the force account work.

8. No claim for such force account work shall be allowed except upon specific written or verbal orders of the Engineer. No work shall be construed as force account work which can be measured under the specifications and paid for at the unit prices named in the contract.

9. The amount and cost of any force account work shall be computed by the Engineer, and the amount certified by him shall be final and conclusive and binding upon the Contractor. All claims for work done on force account basis shall be submitted with a progress or pre-final estimate and shall be accompanied by the original receipted bills for materials, supplies and freight. Materials and supplies furnished from the Contractor's stock shall be supported by an affidavit by the Contractor certifying to their value.

9.05 PAYMENTS AND RETAINED PERCENTAGES

Payment shall be made for work and labor performed and materials furnished under the contract according to the schedule of rates and prices and the specifications attached thereto and made a part thereof.

Partial payments under the contract shall be made at the request of the Contractor once each month, based upon partial estimates to be made by the Engineer as hereinafter provided for; provided, that, in accordance with the provisions of Chapter 238, Laws of 1963, there shall be reserved and retained from the moneys earned by the Contractor as determined by such estimates during the progress of the work performed under the contract, a sum equal to ten per cent (10%) of such estimates.

Payment of said retained percentage shall be withheld for a period of thirty (30) days following the final acceptance by the Engineer of the entire contract as completed and shall be paid the Contractor at the expiration of said thirty (30) days in event no claims, as provided for by Chapter 236, Laws of 1955, have been filed with the Engineer against said fund. In event such claims are filed, the Contractor shall be paid the retained percentage less an amount sufficient to pay any such claims, costs of action and attorney fees, to be disposed of as provided by law.

Unless otherwise provided in the special provisions, payments under the contract shall be made by the City Treasurer from the appropriate fund, upon presentation of proper vouchers by the Contractor, said vouchers to be approved by the Board of Public Works.

9.05A Payment for Materials Stored on the Site

In preparing monthly estimates payment will be made for materials delivered and stockpiled on the job site such as cast iron pipe, valves and hydrants; pipes for sewers twenty-four (24) inches and larger; precast structural beams, structural steel; piling and lumber (not lumber for forms and false work), and other major items stockpiled. Payment will be made for eighty-five per cent (85%) of the cost of the materials as determined from invoices to the Contractor.

Payment as above will be made for individual items, or the total of similar items on hand amounting to more than five hundred dollars ($500.00).

Such payment when made for stockpiled material on the work site, shall not constitute acceptance. The Contractor shall be responsible for safeguarding the materials free from damage of any kind until they are incorporated in the completed work.

9.06 ACCEPTANCE OF CONSTRUCTION

Acceptance of construction shall be defined as final, approval of the project only in that it has been constructed, cleaned up and completed in accordance with plans and specifications.

Projects will be accepted as final, at such time as the Board of Public Works finds they are entirely completed, however, on projects consisting of several disconnected streets, sewer lines or water lines or other widely separated parts, the Engineer may, with the approval of the Board of Public Works, accept any one of these separated completed sections if he so elects. On continuous street projects of less than twelve (12) city blocks, the Contractor shall be required to complete the entire project before acceptance. Street projects longer than twelve (12) blocks may be accepted in sections of six (6) blocks or more, as the Engineer may determine. Continuous sewer projects will not be accepted until completed in their entirety. It it provided further that such approval shall not constitute the acceptance of any defective work that may be found in the completed contract work for a period of thirty (30) days after the acceptance and the Contractor shall make good defective work that may be evidenced. It is also further provided that the acceptance of the contract work, as above, shall not prevent the City from making claim against the Contractor for any defective work if same is discovered within two (2) years from the date the work was accepted.

Acceptance by the City of all or any part of a project means that the Contractor shall be responsible for and maintain the completed permanent work for a period of thirty (30) days and shall replace and make good all damaged or defective work that may be evidenced. The City will assume responsibility for maintenance thirty-one (31) days after final acceptance by the Board of Public Works.

(Sections Nos. 10 and 11 reserved for possible future use.)

Page 10 Section 9—*Measurement and Payment*

9.05 PAYMENTS AND RETAINED PERCENTAGES

Payment shall be made for work and labor performed and materials furnished under the contract according to the schedule of rates and prices and the specifications attached thereto and made a part thereof.

Partial payments under the contract will be made once each month, based upon partial estimates to be made by the Engineer as hereinafter provided for; provided that, in accordance with the provisions of Chapter 238, Laws of 1963, there shall be reserved and retained from the moneys earned by the Contractor, as determined by such estimates during the progress of the work performed under the contract, a sum equal to ten per cent (10%) of such estimates.

Payment of said retained percentage will be withheld for a period of thirty (30) days following the final acceptance by the Board of Public Works of the entire contract as completed and will be paid the Contractor at the expiration of said thirty (30) days in event no claims, as provided for by Chapter 236, Laws of 1955, have been filed with the City Clerk against said fund. In event such claims are filed, the Contractor will be paid the retained percentage less an amount sufficient to pay any such claims, costs of action and attorney fees, to be disposed of as provided by law.

Unless otherwise provided in the special provisions, payments under the contract shall be made by the City Treasurer from the appropriate fund, upon presentation of proper vouchers by the Contractor, said vouchers to be approved by the Board of Public Works.

9.05A Payment for Materials Stored on the Site

In preparing monthly estimates payment will be made for materials delivered and stockpiled on the job site such as cast iron pipe, valves and hydrants; pipes for sewers twenty-four (24) inches and larger; precast structural beams, structural steel; piling and lumber (not lumber for forms and false work), and other major items stockpiled. Payment will be made for eighty-five per cent (85%) of the cost of the materials as determined from invoices to the Contractor.

Payment as above will be made for individual items, or the total of similar items on hand amounting to more than five hundred dollars ($500.00).

Such payment when made for stockpiled material on the work site, shall not constitute acceptance. The Contractor shall be responsible for safeguarding the materials free from damage of any kind until they are incorporated in the completed work.

9.06 ACCEPTANCE OF CONSTRUCTION

Acceptance of construction shall be defined as final approval of the project only in that it has been constructed, cleaned up and completed in accordance with plans and specifications.

Projects will be accepted as final, at such time as the Board of Public Works finds they are entirely completed; however, on projects consisting of several disconnected streets, sewer lines or water lines or other widely separated parts, the Engineer may, with the approval of the Board of Public Works, accept any one of these separated completed sections if he so elects. On continuous street projects of less than twelve (12) city blocks, the Contractor shall be required to complete the entire project before acceptance. Street projects longer than twelve (12) blocks may be accepted in sections of six (6) blocks or more, as the Engineer may determine. Continuous sewer projects will not be accepted until completed in their entirety. It is provided further that such approval shall not constitute the acceptance of any defective work that may be found in the completed contract work for a period of thirty (30) days after the acceptance and the Contractor shall make good defective work that may be evidenced. It is also further provided that the acceptance of the contract work, as above, shall not prevent the City from making claim against the Contractor for any defective work if same is discovered within two (2) years from the date the work was accepted.

Acceptance by the City of all or any part of a project means that the Contractor shall be responsible for and maintain the completed permanent work for a period of thirty (30) days and shall replace and make good all damaged or defective work that may be evidenced. The City will assume responsibility for maintenance thirty-one (31) days after final acceptance by the Board of Public Works.

(Sections Nos. 10 and 11 reserved for possible future use.)

9.05 PAYMENTS AND RETAINED PERCENTAGES

Payment shall be made for work and labor performed and materials furnished under the contract according to the schedule of rates and prices and the specifications attached thereto and made a part thereof.

Partial payments under the contract shall be made at the request of the Contractor once each month, based upon partial estimates to be made by the Engineer as hereinafter provided for; provided, that, in accordance with the provisions of Chapter 238, Laws of 1963, there shall be reserved and retained from the moneys earned by the Contractor as determined by such estimates during the progress of the work performed under the contract, a sum equal to ten per cent (10%) of such estimates.

Payment of said retained percentage shall be withheld for a period of thirty (30) days following the final acceptance by the Engineer of the entire contract as completed and shall be paid the Contractor at the expiration of said thirty (30) days in event no claims, as provided for by Chapter 236, Laws of 1955, have been filed with the Engineer against said fund. In event such claims are filed, the Contractor shall be paid the retained percentage less an amount sufficient to pay any such claims, costs of action and attorney fees, to be disposed of as provided by law.

Unless otherwise provided in the special provisions, payments under the contract shall be made by the City Treasurer from the appropriate fund, upon presentation of proper vouchers by the Contractor, said vouchers to be approved by the Board of Public Works.

9.05A Payment for Materials Stored on the Site

In preparing monthly estimates payment will be made for materials delivered and stockpiled on the job site such as cast iron pipe, valves and hydrants; pipes for sewers twenty-four (24) inches and larger; precast structural beams, structural steel; piling and lumber (not lumber for forms and false work), and other major items stockpiled. Payment will be made for eighty-five per cent (85%) of the cost of the materials as determined from invoices to the Contractor.

Payment as above will be made for individual items, or the total of similar items on hand amounting to more than five hundred dollars ($500.00).

Such payment when made for stockpiled material on the work site, shall not constitute acceptance. The Contractor shall be responsible for safeguarding the materials free from damage of any kind until they are incorporated in the completed work.

9.06 ACCEPTANCE OF CONSTRUCTION

Acceptance of construction shall be defined as final, approval of the project only in that it has been constructed, cleaned up and completed in accordance with plans and specifications.

Projects will be accepted as final, at such time as the Board of Public Works finds they are entirely completed, however, on projects consisting of several disconnected streets, sewer lines or water lines or other widely separated parts, the Engineer may, with the approval of the Board of Public Works, accept any one of these separated completed sections if he so elects. On continuous street projects of less than twelve (12) city blocks, the Contractor shall be required to complete the entire project before acceptance. Street projects longer than twelve (12) blocks may be accepted in sections of six (6) blocks or more, as the Engineer may determine. Continuous sewer projects will not be accepted until completed in their entirety. It it provided further that such approval shall not constitute the acceptance of any defective work that may be found in the completed contract work for a period of thirty (30) days after the acceptance and the Contractor shall make good defective work that may be evidenced. It is also further provided that the acceptance of the contract work, as above, shall not prevent the City from making claim against the Contractor for any defective work if same is discovered within two (2) years from the date the work was accepted.

Acceptance by the City of all or any part of a project means that the Contractor shall be responsible for and maintain the completed permanent work for a period of thirty (30) days and shall replace and make good all damaged or defective work that may be evidenced. The City will assume responsibility for maintenance thirty-one (31) days after final acceptance by the Board of Public Works.

(Sections Nos. 10 and 11 reserved for possible future use.)

Section 12—Clearing and Grubbing

12–1 CLEARING 16

12–1.01 DESCRIPTION

This item shall consist of clearing the areas shown on the plans or as described in the special provisions of all trees, brush and other vegetation, down timber, rotten wood, rubbish and other objectionable material. It shall include removing buildings, fences, lumber and trash piles, and other obstructions interfering with the proposed work, and salvaging such of these materials as may be designated in the special provisions, burning or otherwise disposing of the debris in a satisfactory manner. All work under this item shall be done in accordance with these specifications and in conformity with the plans.

12–1.02 LIMITS OF CLEARING 16

12–1.02A Sewers and Water Mains (Clearing and Grubbing) (Not Used) 16

12–1.02B Streets

In developed and semi-developed areas where drivable streets exist and where the project calls for grading and for paving, the limits of clearing will be outlined on the plans or in the special provisions, and staked accordingly by the Engineer.

12–1.03 CONSTRUCTION DETAILS

Within limits described, all vegetable growth such roots of down trees, and other similar items not specifically covered by unit prices shall be removed and disposed of. All trees shall be felled within the area to be cleared. Where the tree limb structure interefers with utility wires, or where the trees to be felled are in close proximity to utility wires, the tree shall be taken down in sections to eliminate the possibility of damage to the utility.

All buildings, fences, lumber piles, trash and obstructions, except utility poles, within the area to be cleared, shall be removed and disposed of by the Contractor. Any work pertaining to utility poles shall comply with Section 5.08.

Removal of ornamental or danger trees may or may not be a separate item of work on a project. (See Section 12–4). Where ornamental trees exist in planting areas and are not to be removed, it shall be the Contractor's responsibility to trim low limbs which will interfere with the normal operation of his equipment. The trimming shall be performed in a professional manner by competent personnel to the requirements of such work for preservation from damage.

The refuse resulting from the clearing operation shall be hauled to a waste site secured by the Contractor and shall be burned or buried in such a manner as to meet all requirements of State, County and municipal regulations regarding health, safety and public welfare. When authorized by the proper fire authorities, the Contractor may dispose of such refuse by burning on the site of the project provided all requirements set forth by the authorities are met.

Clearing operations shall be carried well in advance of the construction operations so as to permit a well-planned schedule of work.

The Contractor shall be responsible for all damages to existing improvement resulting from his operation.

12–1.04 MEASUREMENT 16

12–1.04A Acreage Basis 16

12–1.04B Lump Sum Basis 16

12–1.05 PAYMENT 16

12–2 GRUBBING 16

12–2.01 DESCRIPTION

This item shall consist of grubbing the areas outlined herein or as otherwise defined in the special provisions. The work shall include the removal of all stumps, roots, vegetable matter, and all structures in or upon the ground, the removal of which is not prescribed under the item of "Clearing" to a depth of three (3) feet below the ground surface.

12–2.02 LIMITS OF GRUBBING 16

12–2.20A Sewers 16

12–2.02B Streets 17

12–2.03 PROTECTION OF EXISTING IMPROVEMENTS DURING GRUBBING OPERATIONS

Where it is necessary to remove stumps and where there are surface or subsurface improvements, the Contractor shall be responsible for determining which of the agencies, public or private, have underground or service utilities in the vicinity of the stump to be removed; and further, he shall notify each agency and request its assistance in locating its services. The Contractor will not be responsible for the cost of locating services.

Where sewer, water, electric, telephone, steam, gas and similar underground services into residences will be imperiled by stump removal, the utility agency affected will cut the service and replace same at no cost to the Contractor. Where telephone cable and/or ducts, water mains, gas mains, steam mains, and sewer trunks exist and are likely to be damaged, special care shall be taken, and roots of stump shall be cut off in such a manner that the existing utility installations will not be damaged in any way.

Regardless of the cooperation of affected agencies and utilities, the Contractor shall be held responsible for any damage to the underground services and utilities that are attributable to his operations and he shall be responsible for repairs necessary thereto as specified in Section 5.09.

The Contractor shall, at his own expense, repair any damage resulting from his operations to existing surface improvements within the area to be grubbed, not required to be removed by the grubbing operations. The Contractor will not be held responsible for damage to such surface improvements which occurred previous to the beginning of the contract operations.

If the Contractor removes stumps for private property owners along the project, he shall be responsible for all damage resulting therefrom.

12–2.04 CONSTRUCTION DETAILS

All stumps and their roots, foundations and planking, posts, embedded in the ground within the limits described herein or otherwise described in the special provisions and within the boundary limits of all embankments, shall be removed and disposed of. Piling and butts of utility poles shall be removed to a minimum depth of four (4) feet below the original ground or four (4) feet below a subgrade, whichever applies for the grubbing area. Disposal requirements for grubbing debris shall be the same as those described for clearing.

Removal of sod and lawns which are not to be replaced shall be considered incidental to other work of the project and no payment will be made therefor. Grubbing shall otherwise meet requirements previously outlined under "Clearing."

12–2.05 MEASUREMENT 17

12–2.06 PAYMENT 17

12–3 CLEARING AND GRUBBING 17

12–3.01 DESCRIPTION 17

12–3.02 CONSTRUCTION DETAILS 17

12–3.03 MEASUREMENT AND PAYMENT 17

12–4 ORNAMENTAL AND DANGER TREES 17

12–4.01 DESCRIPTION 17

12–4.02 MEASUREMENT, ORNAMENTAL AND DANGER TREES 17

12–4.03 PAYMENT 18

Section 13—Street and Drainage Excavation

13–1 DESCRIPTION 18

13–1.01 CLASSIFICATION 18

13–2 PROTECTION OF EXISTING IMPROVEMENTS 18

13–2.01 SURFACE IMPROVEMENTS

The Contractor shall be responsible for the protection of existing surface improvements as described elsewhere in the various applicable sections of the specifications, and any damage resulting thereto from his operations shall be restored satisfactorily at his expense.

13–2.02 SUBSURFACE IMPROVEMENTS 18

13–2.02A General

Utilities of record will be shown on the construction plans insofar as it is possible to do so. Failure of the Engineer to show the existence of subsurface ojbects or installations on the plans shall not relieve the Contractor from his responsibility to make independent check on the ground, nor relieve him from all liability for damages resulting from his operations unless otherwise provided in the special provisions or by exceptions hereinafter mentioned.

It shall be the responsibility of the Contractor to give proper written notification to the agencies that have utilities in place and to cooperate with those agencies in the protection and relocation of the various underground installations. These agencies will give assistance in the location of the various utilities, but this shall not relieve the Contractor from responsibility for any damage incurred, except in cases where the installations are not of record, and where the installations cannot be located as closely as is normally possible with an electronic pipe locator. In such cases, the Contractor will not be liable when he has proceeded with due caution and cooperated with the agencies responsible.

13–2.02B Lighting Cables 18

13–2.02C Sewers and Appurtenances

Where sewer manholes exist within the areas to be excavated, they shall be provided with a suitable tight fitting, temporary cover before excavating operations start to prevent debris of any kind from the excavating operations gaining access to the manhole. Catch basins, existing, shall also be protected by suitable screening covers to prevent excessive amounts of gravel, earth and other objectionable debris from the excavation work washing into the catch basins and into the outlet pipe. The Contractor shall be responsible for all costs to clean out and flush debris from manholes, catch basins and the main sewer that is made necessary by reason of his excavating operations, through failure to provide tight temporary covers for manholes and suitable screens for catch basins prior to his excavating operations.

Where house services or other sewer pipes are damaged through no fault of the Contractor, they shall be repaired and payment will be made therefor in accordance with the applicable unit contract prices therefor, or as extra work, when no applicable contract is in the proposal.

13–2.02D Water Mains and Appurtenances

The Contractor shall be responsible for any damage to water mains and water facilities caused by his operations, except that he will be relieved therefrom under the following conditions: (1) He has not excavated below or beyond the required excavation lines and, (2) he has given proper and timely notice of his work plans, and (3) he has used reasonable care and has cooperated in minimizing the damages, and (4) except as may be modified hereinafter.

Any damage to water gates, hydrants, valve chambers and other surface appurtenances which results from the Contractor's operation shall be his sole responsibility.

Any damage to water gates, hydrants, valve chambers and other surface appurtenances which results from the Contractor's operations shall be repaired as may be necessary by the Seattle Water Department at his expense.

13–2.20E Private Utilities 18

13–3 CONSTRUCTION DETAILS 18

13–3.01 SIDE STREET, ALLEY AND DRIVEWAY APPROACHES 18

13–3.02 EXCAVATION BELOW GRADE

Where the Engineer deems subgrade material to be unsatisfactory, excavation below grade will be required to such depths as he may direct. Excavation below grade shall be of the same classification as that above it, provided it is removed in the same operation as the normal excavation. Where the Contractor has completed the roadway excavation and is required to move back to remove unsuitable material, or where the additional depth requires special equipment because of the presence of shallow utilities or other unforeseen conditions, the work shall be performed as directed and a payment for excavation below grade will be made on the basis of force account.

If the excavation below grade is required because of negligence on the part of the Contractor, the necessary excavation below grade and backfilling as required to restore the surface satisfactorily shall be at his expense.

13–3.03 PLANTING AND SIDEWALK AREAS
(Title changed for City use)

The class of excavation as specified shall include all excavation of planting and sidewalk areas and shall extend to the lateral and terminal limits shown on the construction plans. On planting strips in developed areas, the excavations shall be made and terminated to blend neatly with exisiting contours. Where planting strips are low, they shall be filled with soil comparable to that which exists to conform to the plan grades.

13–3.04 PAVEMENT REMOVAL

Pavement removal shall be accomplished and compensation to be made therefor in accordance with the requirements of Section 52. Where existing streets are to be excavated and are presently surfaced with asphalt concrete or bituminous mats on earth or granular base, these surfaces shall be considered as part of the excavation unless otherwise specified in the special provisions. Where existing street pavements extend beyond the back of the new curb line, the Contractor will also be required to remove the pavement as part of the excavation. It shall be the Contractor's responsibility before submitting his proposal, in accordance with Section 2.02, to determine the thickness of such surfaces.

13–3.05 DISPOSAL OF EXCAVATED MATERIAL

Suitable excavated material shall be used for the making of all required project embankments. The more suitable portions of the excavated material shall be stored on or off the project, as the Contractor may elect, and used for backfilling of curbs and dressing up the planting areas, the cost of which shall be considered as incidental to the excavation. Excavated material in excess of that needed to complete all embankments and for backfilling curbs and dressing planting areas shall be wasted by an equitable distribution of the material to properties within the project limits from which the necessary grading permit has been received, in accordance with Section 4.06A. Any surplus materials remaining after fulfilling the above requirements shall be disposed of by the Contractor at his own expense.

The Contractor shall not waste any excavated material until he is certain there is sufficient material to complete all necessary project embankments and planting areas. If an undue amount is wasted, the Contractor shall secure and furnish necessary borrow material at his own expense.

13–3.06 DITCHES

All ditches shall be constructed as shown on the plans and shall be so graded to provide natural gravity flow of the water to inlets, catch basins, culverts or channels. Ditches from cuts shall be located in such manner as to

bypass any part of the adjacent fill so that no damage will be caused thereto by running water.

13–3.07 SELECTED MATERIAL 19

13–3.08 SLIDES 19

13–3.09 OVER EXCAVATION
(Title changed for City use)

In all materials encountered in the performance of the contract, over excavation is that portion of any such material which is excavated, displaced or loosened outside and beyond the slopes, lines or grades as staked or re-established with the exception of such material which occurs as slides as described hereinbefore, regardless of whether any such excavation is due to blasting, to the inherent character of any formation encountered, or to any other cause. All over excavation as so defined shall be removed by the Contractor at his own expense and shall be disposed of by the Contractor in the same manner as provided for the surplus under the heading of "Excavation," but at his own expense and without any allowance for haul.

Whenever it is agreed to in writing and in advance between the Contractor and the Engineer, over excavation may be used in forming any embankment as planned to replace borrow which otherwise would have to be provided for. In this event payment will be made for the volume of common borrow or solid rock borrow, as the case may be, which the over excavation replaces, at the respective contract prices per cubic yard for such borrow with the additional allowance for haul, if any, on such available borrow; provided, however, that no allowance will be made for over excavation which is placed in the embankment as planned in lieu of available material coming from within the neat lines of the roadway prism.

13–3.10 EMBANKMENTS 20

13–3.10A Foundation Treatment 20

13–3.10A1 Unsuitable Foundation Excavation

When shown on the plans or when specified in the special provisions, unstable natural ground shall be excavated prior to the placement of embankment over the area. The unstable material may consist of peat, muck, swampy or unsuitable materials, including buried logs and stumps. The material shall be excavated by the Contractor as directed by the Engineer to give the constructed embankment full bearing on solid ground.

Materials excavated from the roadway or channel change prisms, the classification of which is covered by Section 13–1.01 will not be classified as unsuitable foundation excavation unless the removal must be accomplished by dragline operation or by special excavation methods requiring different equipment from that used for roadway excavation, in which case measurement and payment as "Unsuitable Foundation Excavation" on a cubic yard basis will apply.

When no unit contract price is provided in the contract for "Unsuitable Foundation Excavation," such work as may be ordered by the Engineer shall be accomplished as extra work and payment made as porvided in Section 9.03.

13–3.10A2 Displacement of Unsuitable Foundation Materials 20

13–3.10A3 Backfilling 20

13–3.10B Accelerated Subsidence by Vertical Sand Drains 20

13–3.10B1 Vertical Sand Drains Including Backfill

Prior to constructing the vertical sand drains, a working platform consisting of roadway excavated material or common borrow shall be constructed to a depth of two (2) feet, or as shown on the plans or as ordered by the Engineer, and shall be placed over the entire area where sand drains are to be constructed, and be capable of supporting light construction equipment. This platform will provide access to the areas for the construction of sand drains.

If the equipment used cannot be supported on the working platform without displacement of the underlying soft soil, the equipment shall be supported on suitable mats. The material may be placed in one lift, but in such a manner that will cause a minimum of displacement of the underlying soil.

Vertical holes eighteen (18) inches in diameter shall be constructed to the underying firm strata, or to such a depth as the Engineer may direct, and the holes backfilled as hereinafter provided. The holes may be constructed by driving or jetting a casing down to the required depth, or by other approved methods.

The holes shall be verticle and shall be accurately spaced as indicated on the plans or as staked by the Engineer. Holes drilled out of place or that are damaged in excavating or backfilling shall be backfilled and abandoned, if so ordered by the Engineer, and no compensation will be allowed for excavating and backfilling holes that are abandoned.

If holes are excavated by jetting a casing to the desired depth, the jetting shall be continued for a sufficient length of time after the casing has reached final depth to remove all solid material within the casing.

After the hole has been backfilled, the casing shall be removed.

Each hole shall be inspected and approved by the Engineer before any filling material is placed therein.

Any method of construction that, in the opinion of the Engineer, is appreciably disturbing the adjacent ground, shall be discontinued.

Materials removed in excavating the holes shall be disposed of when of a suitable nature, as a blanket, adjacent to and outside the limits of the working platform, otherwise it shall be disposed of by the Contractor.

Materials for use in backfilling sand drains shall consist of clean, coarse sand or fine gravel, shall be uniformly graded from coarse to fine, and shall be of such size that when tested on U. S. Standard sieves it will conform to the following:

Passing a ½ inch sieve	90% - 100%
Passing a ¼ inch sieve	65% - 100%
Passing a No. 10 sieve	40% - 100%
Passing a No. 50 sieve	3% - 30%
Passing a No. 100 sieve	0% - 4%
Passing a No. 200 sieve (wet sieving)	0% - 3%

It is the intent of these specifications that each hole be completely filled with backfill material. The Contractor shall use compressed air, or such other means as are necessary, to force the sand backfill from the casing in the event the sand does not fill the hole completely by gravity flow when the casing is removed.

13–3.10B2 Sand Drainage Blanket 21

13–3.10C Embankment Construction

Embankment construction shall be divided into two classes, rock embankment and earth embankments. Rock embankments shall be all, or any part, of an embankment in which the material contains 10% or more by volume of gravel or stone four (4) inches or greater in diameter. Embankments of all other material shall be considered as earth embankments.

When embankments are constructed across wet or swampy ground which will not support the weight of heavy hauling and spreading equipment, the Contractor will be required to choose such methods of embankment construction and to use such hauling and spreading equipment as will least disturb the soft foundation. When soft foundations are encountered, the lower part of the fill may be constructed by dumping and spreading successive vehicle loads in a uniformly distributed layer or thickness, but not greater than six (6) feet, unless authorized by the Engineer, to support the vehicle while placing subsequent layers, after which the remainder of the embankment shall be constructed in layers and compacted as specified.

It is not the policy of the Engineer to allow an increase in the planned depth of embankment material over soft, wet, or swampy ground for the sole purpose of providing support for heavy hauling and spreading equipment, unless the Contractor proves to the satisfaction of the Engineer that the planned depth is inadequate to support lighter hauling vehicles. If it proves necessary for the

Contractor to use smaller hauling vehicles or different methods of embankment construction than he had originally contemplated in order to comply with the foregoing, such shall not be the basis for a claim for extra compensation. The unit contract price for the various pay items involved shall be full compensation for all labor, materials and equipment necessary to perform the work as outlined herein.

At the time of compaction, the moisture content of that portion of the embankment material shall be not more than two (2) percentage points above the optimum moisture content as determined in the "Compaction Control Test" specified in Section 13–3.10E5. Embankment material which contains less moisture than required for proper compaction with the compacting equipment being used shall be watered in the amount ordered by the Engineer.

Compaction of embankment material which contains excessive moisture shall not be started until the moisture content is reduced to the maximum amount specified heretofore. All costs and expenses involved in drying embankment materials shall be considered incidental to the various unit contract prices, unless a bid item or items for "Aeration Equipment" are included in the contract.

13–3.10D Rock Embankment Construction 21

13–3.10E Earth Embankment Construction 21

13–3.10E1 Compacting Earth Embankments 21

13–3.10E2 Method A 22

13–3.10E3 Method B 22

13–3.10E4 Method C

Under Method C, earth embankments shall be compacted in accordance with Section 13–3.10E1 and in addition thereto each layer shall be compacted to at least 95 percent of the maximum density as determined by the "Compaction Control Test" specified in Section 13–3.10E5. The moisture content of the earth at the time of compaction shall be uniform throughout the layer and shall be such that the specified density can be obtained, but in no case shall it vary more than two (2) percentage points above or below the optimum moisture content as determined in Section 13–3.10E5.

At all locations that are inaccessible to a roller the embankment shall be brought up in horizontal layers and compacted thoroughly with mechanical tampers. The horizontal layers shall not exceed eight (8) inches in loose thickness except that the layers of the top two (2) feet shall not exceed four (4) inches in loose thickness.

13–3.10E5 Compaction Control Test

Optimum moisture content and maximum density for other than granular materials shall be determined in accordance with City of Seattle Test for Moisture—Density Relations of Soil.

For granular materials required density shall be determined in accordance with the City of Seattle Compaction Control Method for Granular Matrials.

Instructions for both of these methods may be had without charge upon request to the Materials Laboratory, Seattle Engineering Department, City Municipal Building, Seattle, Washington.

13–3.10F Embankments at Structures, Trestle and Bridge Ends 22

13–3.11 BORROW 22

13–3.12 STRIPPING QUARRIES AND PITS

Stripping of quarries and pits shall consist of the removal, after clearing and grubbing, of the surface material and overburden which is unsuitable for the kind of material to be borrowed or produced for use. The stripping shall be disposed of by the Contractor unless otherwise provided in the special provisions.

Whenever the Contractor elects to obtain material from a source other than that provided by the special provisions to provide a source of material, the clearing, grubbing and stripping therefrom shall be performed in accordance with Section 2 as may be necessary and all costs incurred therefor shall be considered as incidental to the project and shall be included by the Contractor in his unit contract prices of borrow or processed materials to be removed.

13–3.13 COMPACTING CUT SECTIONS 23

13–3.14 AERATION EQUIPMENT 23

13–3.15 SNOW REMOVAL 23

13–4 MEASUREMENT 23

13–5 PAYMENT

Payment will be made for such of the following bid items as are included and shown in any particular contract:

1. "Unclassified Excavation," or "Unclassified Excavation Including Haul," per cubic yard.
2. "Common Excavation," or "Common Excavation Including Haul," per cubic yard.
3. "Solid Rock Excavation," or "Solid Rock Excavation Including Haul," per cubic yard.
4. "Unclassified Ditch Excavation," per cubic yard.
5. "Common Ditch Excavation," per cubic yard.
6. "Solid Rock Ditch Excavation," per cubic yard.
7. "Unclassified Channel Excavation," per cubic yard.
8. "Common Channel Excavation," per cubic yard.
9. "Solid Rock Channel Excavation," per cubic yard.
10. "Unclassified Borrow," per cubic yard.
11. "Common Borrow," per cubic yard.
12. "Solid Rock Borrow," per cubic yard.
13. "Unsuitable Foundation Excavation," per cubic yard.
14. "Stripping Quarries and Pites," per cubic yard.
15. "Vertical Sand Drains," per vertical foot.
16. "Sand Borrow for Drainage Blanket," per ton or per cubic yard.
17. "Hydrant Water," per linear foot.
18. "Hauled Water," per M gallon.
19. "Embankment Compaction," per cubic yard.
20. "Heavy Duty Power Grader with Scarifier," per hour.
21. "Tamping Roller," per hour.
22. "Heavy Duty Rooter," per hour.
23. "Gang Plow and Tractor," per hour.
24. "Tandem Disc and Tractor," per hour.

The unit contract prices per cubic yard for such types and classes of excavation and borrow listed above from items 1 to 14 inclusive, shall be full compensation for excavating, loading, placing or otherwise disposing herein, or as directed by the Engineer, and shall include the removal and disposal, the wasting or stockpiling of forest debris or any top soil, organic matter or other deleterious matter from the surface of a cut or fill, as may be specified or as may be directed by the Engineer.

As compensation for hauling excavated material, when so shown as an item in the proposal, the unit contract price per unit for "Haul" shall apply as provided in Section 14, except that when the pay item for excavation is shown as "Including Haul," the unit contract price per cubic yard for the item specified shall include all costs of hauling the material the full distance as required.

Except where otherwise provided, the work prescribed under the heading of "Embankment" will not be paid for directly as a pay item but shall be considered as incidental work pertaining to the placement of the several classes of excavation and borrow.

The unit contract price per vertical foot for "Vertical Sand Drains" shall be full compensation for furnishing all labor, tools, equipment and materials necessary or incidental to excavating the drain holes and for selecting, loading, hauling and placing the sand backfill material as specified above.

The unit contract price per ton for "Sand Borrow for Drainage Blanket" shall be full compensation for selecting and/or processing of the material, and for hauling and placing the material as a blanket over the sand drains.

Water will be paid for as provided in Section 16.

Payment for "Embankment Compaction" per cubic yard shall be made at the unit contract price for all compacted embankment material placed up to finish subgrade elevation, excepting that excavated material that is wasted and excavation or borrow material placed under water, or placed by dredging operations, or by end dumping, or by any other method where compaction in uniform layers is not practicable, shall be excluded from the pay quantity, and excepting further that payment for "Embankment Compaction" will not be made for embankments constructed by Method A.

The unit contract price per cubic yard for "Embankment Compaction" shall be full compensation for all materials, labor, tools, equipment and incidentals required to complete the compaction of embankments in accordance with the specifications.

The quantities for embankment compaction represent the best judgment of the City as to the quantities that will be involved in compacting embankments and cut sections. The City does not guarantee these estimated quantities, however, and the Engineer will be the sole judge as to the actual quantities required

The unit contract price per hour for the aerating equipment listed shall be full compensation for furnishing and operating the assemblies and for all rentals, supplies and labor to perform the work specified.

In the event solid rock is encountered on any project for which no payment item for its excavation is provided in the bid proposal, compensation for such necessary removal shall be negotiated as extra work in accordance with Section 9.03.

Compensation will be made for "Haul," in accordance with Section 14 at the unit price bid. If a bid item for "Haul" is not included in the project, the above fixed prices for excavation of solid rock materials shall include all haul.

Clearing and grubbing of borrow pits and channel excavation areas will be paid for as specified in Section 12. Clearing and grubbing of ditch excavation areas shall be considered as incidental to the construction, and the costs thereof shall be included in the pay item of ditch or channel excavation involved.

Section 14—Haul

14–1 DESCRIPTION 24

14–2 MEASUREMENT 25

14–2.01 HAUL QUANTITIES 25

14–2.02 ROADWAY AND AUXILIARY LANES 25

14–2.03 BORROW OR WASTE 25

14–3 PAYMENT 25

Section 15—Subgrade

15–1 DESCRIPTION 25

15–2 CONSTRUCTION DETAILS 25

15–2.01 SUBGRADE FOR BASE MATERIALS

Before line and grade stakes for the subgrade are set by the Engineer, the area as shown on the plans, or as slope staked in accordance with Section 5.08 shall have been cleared of brush, vegetation, other unstable debris; obstructions; all depressions containing water drained and the area smoothed over to remove surface inequalities.

After the foregoing requirements have been complied with, the proper alignment and grades will be given by the Engineer. Where normal crown sections are being constructed, stakes will be set at convenient offsets at intervals not to exceed fifty (50) feet and at closer intervals where necessary, such as at street and alley intersections. It shall be the responsibility of the Contractor to set center line grades which may be needed except in cases where the street grades are warped or otherwise do not conform with the typical section, in which case the Engineer will set the stakes.

If ordered by the Engineer, an existing subgrade shall be compacted to 95% of maximum density measured in accordance with Section 13–3.10E5, or such other density as required by the Engineer, by use of such compaction equipment as called for in the special provisions or as ordered by the Engineer. The compaction equipment shall comply with the requirements of Section 15–2.01A. Payment for compaction of subgrade shall be as outlined in Sections 15–3 and 15–4.

All soft, spongy or yielding spots which may be ordered removed by the Engineer, shall be entirely removed and the space refilled with suitable material and thoroughly compacted. Removal of such unsuitable material will be paid for on a Force Account basis as provided in Section 9.04 unless otherwise provided by a bid item in the proposal, or unless the unsuitable area was caused by negligence of the Contractor in his operations. In such case, the removal, replacement and compaction shall be done by the Contractor at his own expense.

The final finishing shall be to a height above the finished subgrade cross sections as may be determined by trial and experience, to be proper to ensure thorough compaction to the grade as staked, by rolling.

When ordered by the Engineer, the Contractor shall sprinkle the subgrade with water. Compensation to the Contractor for sprinkling as directed will be made at the unit contract price for "Water."

Grade and line, throughout the stages of constructing the subgrade, shall be secured from the reference stakes. The subgrade shall be maintained in the finished condition until the first course of surfacing is placed upon it.

15–2.01A Compacting Equipment 25

15–2.02 SUBGRADE FOR CEMENT CONCRETE PAVEMENT

The subgrade area for a proposed cement concrete pavement shall be free of all objectionable materials specified hereinbefore in Section 12 and Section 15–2.01, and shall be composed of suitable imperishable earth materials which, when compacted as required by the specifications, will result in an unyielding subgrade surface at the exact profie grade and cross section shown on the plans as staked by the Engineer, upon which the Contractor will place and finish the concrete pavement to the specified thickness.

The subgrade area for a proposed pavement shall be established to approximate grade, plus or minus one-tenth (0.1) foot, and compacted by the Contractor to a firm unyielding surface before any pavement forms are set. The entire subgrade area shall be compacted, as required, with suitable equipment meeting the requirements of Section 15–2.01A, to a width that extends one (1) foot outside the edges of the proposed pavement. After forms have been set by the Contractor to the exact grade and alignment for the proposed pavement, the final subgrade area between the forms shall be established to the exact cross sction called for by the plans and again compacted to an unyielding surface with a smooth wheeled power-driven compacting unit.

When the subgrade for the proposed pavement is over an old roadbed composed of gravel and macadam, the old gravel or macadam shall be scarified and the material shall be uniformly spread and then rolled until thoroughly compacted.

The subgrade as finally completed, shall be approved by the Engineer and thereafter shall be maintained by the Contractor at an optimum moisture content by wetting with water as may be necessary until the time concrete is actually placed.

The unit contract price per ton for "Sand Borrow for Drainage Blanket" shall be full compensation for selecting and/or processing of the material, and for hauling and placing the material as a blanket over the sand drains.

Water will be paid for as provided in Section 16.

Payment for "Embankment Compaction" per cubic yard shall be made at the unit contract price for all compacted embankment material placed up to finish subgrade elevation, excepting that excavated material that is wasted and excavation or borrow material placed under water, or placed by dredging operations, or by end dumping, or by any other method where compaction in uniform layers is not practicable, shall be excluded from the pay quantity, and excepting further that payment for "Embankment Compaction" will not be made for embankments constructed by Method A.

The unit contract price per cubic yard for "Embankment Compaction" shall be full compensation for all materials, labor, tools, equipment and incidentals required to complete the compaction of embankments in accordance with the specifications.

The quantities for embankment compaction represent the best judgment of the City as to the quantities that will be involved in compacting embankments and cut sections. The City does not guarantee these estimated quantities, however, and the Engineer will be the sole judge as to the actual quantities required

The unit contract price per hour for the aerating equipment listed shall be full compensation for furnishing and operating the assemblies and for all rentals, supplies and labor to perform the work specified.

In the event solid rock is encountered on any project for which no payment item for its excavation is provided in the bid proposal, compensation for such necessary removal shall be negotiated as extra work in accordance with Section 9.03.

Compensation will be made for "Haul," in accordance with Section 14 at the unit price bid. If a bid item for "Haul" is not included in the project, the above fixed prices for excavation of solid rock materials shall include all haul.

Clearing and grubbing of borrow pits and channel excavation areas will be paid for as specified in Section 12. Clearing and grubbing of ditch excavation areas shall be considered as incidental to the construction, and the costs thereof shall be included in the pay item of ditch or channel excavation involved.

Section 14—Haul

14–1 DESCRIPTION 24

14–2 MEASUREMENT 25

14–2.01 HAUL QUANTITIES 25

14–2.02 ROADWAY AND AUXILIARY LANES 25

14–2.03 BORROW OR WASTE 25

14–3 PAYMENT 25

Section 15—Subgrade

15–1 DESCRIPTION 25

15–2 CONSTRUCTION DETAILS 25

15–2.01 SUBGRADE FOR BASE MATERIALS

Before line and grade stakes for the subgrade are set by the Engineer, the area as shown on the plans, or as slope staked in accordance with Section 5.06, shall have been cleared of brush, vegetation, other unstable debris, obstructions; all depressions containing water drained and the area smoothed over to remove surface inequalities.

After the foregoing requirements have been complied with, the proper alignment and grades will be given by the Engineer. Where normal crown sections are being constructed, stakes will be set at convenient offsets at intervals not to exceed fifty (50) feet and at closer intervals where necessary, such as at street and alley intersections. It shall be the responsibility of the Contractor to set center line grades which may be needed except in cases where the street grades are warped or otherwise do not conform with the typical section, in which case the Engineer will set the stakes.

If ordered by the Engineer, an existing subgrade shall be compacted to 95% of maximum density measured in accordance with Section 13–3.10E5, or such other density as required by the Engineer, by use of such compaction equipment as called for in the special provisions or as ordered by the Engineer. The compaction equipment shall comply with the requirements of Section 15–2.01A. Payment for compaction of subgrade shall be as outlined in Sections 15–3 and 15–4.

All soft, spongy or yielding spots which may be ordered removed by the Engineer, shall be entirely removed and the space refilled with suitable material and thoroughly compacted. Removal of such unsuitable material will be paid for on a Force Account basis as provided in Section 9.04 unless otherwise provided by a bid item in the proposal, or unless the unsuitable area was caused by negligence of the Contractor in his operations. In such case, the removal, replacement and compaction shall be done by the Contractor at his own expense.

The final finishing shall be to a height above the finished subgrade cross sections as may be determined by trial and experience, to be proper to ensure thorough compaction to the grade as staked, by rolling.

When ordered by the Engineer, the Contractor shall sprinkle the subgrade with water. Compensation to the Contractor for sprinkling as directed will be made as provided in Section 16.

Grade and line, throughout the stages of constructing the subgrade, shall be secured from the reference stakes. The subgrade shall be maintained in the finished condition until the first course of surfacing is placed upon it.

15–2.01A Compacting Equipment 25

15–2.02 SUBGRADE FOR CEMENT CONCRETE PAVEMENT

The subgrade area for a proposed cement concrete pavement shall be free of all objectionable materials specified hereinbefore in Section 12 and Section 15–2.01, and shall be composed of suitable imperishable earth materials which, when compacted as required by the specifications, will result in an unyielding subgrade surface at the exact profile grade and cross section shown on the plans as staked by the Engineer, upon which the Contractor will place and finish the concrete pavement to the specified thickness.

The subgrade area for a proposed pavement shall be established to approximate grade, plus or minus one-tenth (0.1) foot, and compacted by the Contractor to a firm unyielding surface before any pavement forms are set. The entire subgrade area shall be compacted, as required, with suitable equipment meeting the requirements of Section 15–2.01A, to a width that extends one (1) foot outside the edges of the proposed pavement. After forms have been set by the Contractor to the exact grade and alignment for the proposed pavement, the final subgrade area between the forms shall be established to the exact cross section called for by the plans and again compacted to an unyielding surface with a smooth wheeled power-driven compacting unit.

When the subgrade for the proposed pavement is over an old roadbed composed of gravel and macadam, the old gravel or macadam shall be scarified and the material shall be uniformly spread and then rolled until thoroughly compacted.

The subgrade as finally completed shall be approved by the Engineer and thereafter shall be maintained by the Contractor at an optimum moisture content by wetting with water as may be necessary until the time concrete is actually placed.

Section 14—*Haul* Page 15

The unit contract price per ton for "Sand Borrow for Drainage Blanket" shall be full compensation for selecting and/or processing of the material, and for hauling and placing the material as a blanket over the sand drains.

Water will be paid for as provided in Section 16.

Payment for "Embankment Compaction" per cubic yard shall be made at the unit contract price for all compacted embankment material placed up to finish subgrade elevation, excepting that excavated material that is wasted and excavation or borrow material placed under water, or placed by dredging operations, or by end dumping, or by any other method where compaction in uniform layers is not practicable, shall be excluded from the pay quantity, and excepting further that payment for "Embankment Compaction" will not be made for embankments constructed by Method A.

The unit contract price per cubic yard for "Embankment Compaction" shall be full compensation for all materials, labor, tools, equipment and incidentals required to complete the compaction of embankments in accordance with the specifications.

The quantities for embankment compaction represent the best judgment of the City as to the quantities that will be involved in compacting embankments and cut sections. The City does not guarantee these estimated quantities, however, and the Engineer will be the sole judge as to the actual quantities required

The unit contract price per hour for the aerating equipment listed shall be full compensation for furnishing and operating the assemblies and for all rentals, supplies and labor to perform the work specified.

In the event solid rock is encountered on any project for which no payment item for its excavation is provided in the bid proposal, compensation for such necessary removal shall be negotiated as extra work in accordance with Section 9.03.

Compensation will be made for "Haul," in accordance with Section 14 at the unit price bid. If a bid item for "Haul" is not included in the project, the above fixed prices for excavation of solid rock materials shall include all haul.

Clearing and grubbing of borrow pits and channel excavation areas will be paid for as specified in Section 12. Clearing and grubbing of ditch excavation areas shall be considered as incidental to the construction, and the costs thereof shall be included in the pay item of ditch or channel excavation involved.

Section 14—Haul

14–1 DESCRIPTION 24

14–2 MEASUREMENT 25

14–2.01 HAUL QUANTITIES 25

14–2.02 ROADWAY AND AUXILIARY LANES 25

14–2.03 BORROW OR WASTE 25

14–3 PAYMENT 25

Section 15—Subgrade

15–1 DESCRIPTION 25

15–2 CONSTRUCTION DETAILS 25

15–2.01 SUBGRADE FOR BASE MATERIALS

Before line and grade stakes for the subgrade are set by the Engineer, the area as shown on the plans, or as slope staked in accordance with Section 5.08 shall have been cleared of brush, vegetation, other unstable debris; obstructions; all depressions containing water drained and the area smoothed over to remove surface inequalities.

After the foregoing requirements have been complied with, the proper alignment and grades will be given by the Engineer. Where normal crown sections are being constructed, stakes will be set at convenient offsets at intervals not to exceed fifty (50) feet and at closer intervals where necessary, such as at street and alley intersections. It shall be the responsibility of the Contractor to set center line grades which may be needed except in cases where the street grades are warped or otherwise do not conform with the typical section, in which case the Engineer will set the stakes.

If ordered by the Engineer, an existing subgrade shall be compacted to 95% of maximum density measured in accordance with Section 13–3.10E5, or such other density as required by the Engineer, by use of such compaction equipment as called for in the special provisions or as ordered by the Engineer. The compaction equipment shall comply with the requirements of Section 15–2.01A. Payment for compaction of subgrade shall be as outlined in Sections 15–3 and 15–4.

All soft, spongy or yielding spots which may be ordered removed by the Engineer, shall be entirely removed and the space refilled with suitable material and thoroughly compacted. Removal of such unsuitable material will be paid for on a Force Account basis as provided in Section 9.04 unless otherwise provided by a bid item in the proposal, or unless the unsuitable area was caused by negligence of the Contractor in his operations. In such case, the removal, replacement and compaction shall be done by the Contractor at his own expense.

The final finishing shall be to a height above the finished subgrade cross sections as may be determined by trial and experience, to be proper to ensure thorough compaction to the grade as staked, by rolling.

When ordered by the Engineer, the Contractor shall sprinkle the subgrade with water. Compensation to the Contractor for sprinkling as directed will be made at the unit contract price for "Water."

Grade and line, throughout the stages of constructing the subgrade, shall be secured from the reference stakes. The subgrade shall be maintained in the finished condition until the first course of surfacing is placed upon it.

15–2.01A Compacting Equipment 25

15–2.02 SUBGRADE FOR CEMENT CONCRETE PAVEMENT

The subgrade area for a proposed cement concrete pavement shall be free of all objectionable materials specified hereinbefore in Section 12 and Section 15–2.01, and shall be composed of suitable imperishable earth materials which, when compacted as required by the specifications, will result in an unyielding subgrade surface at the exact profie grade and cross section shown on the plans as staked by the Engineer, upon which the Contractor will place and finish the concrete pavement to the specified thickness.

The subgrade area for a proposed pavement shall be established to approximate grade, plus or minus one-tenth (0.1) foot, and compacted by the Contractor to a firm unyielding surface before any pavement forms are set. The entire subgrade area shall be compacted, as required, with suitable equipment meeting the requirements of Section 15–2.01A, to a width that extends one (1) foot outside the edges of the proposed pavement. After forms have been set by the Contractor to the exact grade and alignment for the proposed pavement, the final subgrade area between the forms shall be established to the exact cross sction called for by the plans and again compacted to an unyielding surface with a smooth wheeled power-driven compacting unit.

When the subgrade for the proposed pavement is over an old roadbed composed of gravel and macadam, the old gravel or macadam shall be scarified and the material shall be uniformly spread and then rolled until thoroughly compacted.

The subgrade as finally completed, shall be approved by the Engineer and thereafter shall be maintained by the Contractor at an optimum moisture content by wetting with water as may be necessary until the time concrete is actually placed.

15–2.03 PROTECTION OF SUBGRADE

After preparing the final subgrade for cement concrete pavement, as above specified, all unnecessary traffic shall be kept off. The Contractor shall protect the prepared subgrade from both his own and public traffic.

Should it be found necessary by the Contractor to haul concrete aggregate and cement over the prepared subgrade for the actual concrete placing operations, the Contractor at his own expense, will be required to restore the damaged subgrade as a result thereof, by whatever means may be necessary to restore the subgrade to a firm compacted surface at the grade elevation and cross section shown on the plan.

15–3 MEASUREMENT 27

15–4 PAYMENT

Payment will be made for such of the following bid items as are included in the bid proposals:

1. "Variable Load Compactor," per hour.
2. "Grid Roller," per hour.
3. "Pneumatic-tired Roller," per hour.
4. "Smooth-wheeled Power Roller," per hour.
5. "Vibratory Compactor," per hour.
6. "Tamping Roller," per hour.
7. "Mechanical Tamper," per hour.
8. "Hydrant Water," per linear foot.
9. "Hauled Water," per M gallons.

When any work described in this section is required but no item of payment is provided therefor in the proposal, the work required shall be considered as incidental to the construction and all costs thereof shall be included by the Contractor in other pay items of the contract.

All other costs for labor, materials, tools and equipment required for, or incidental to the preparation, shaping, maintaining and protection of the subgrade, except as outlined in Section 15–1, shall be included in the unit contract price in place for the particular class of surfacing or paving involved. No additional payment will be made for the preparation, shaping and protection of the subgrade.

Payment to the Contractor for applying water to the subgrade as required, will be made as specified in Section 16.

The compacting equipment described in Section 15–2.01A will be considered pay items when used for compacting subgrades as specified in Section 15–2.01, and Section 15–2.02 for the initial preliminary subgrade before the setting of forms for the proposed pavement. Compaction required to compact the final subgrade between the pavement forms as specified in Section 39–3.14 will not be a pay item but shall be incidental to the pavement construction and included in the unit bid contract prices for the cement concrete pavement. The accepted hourly quantities for compacting at the contract price per hour for "Variable Load Compactor," "Grid Roller," "Pneumatic-tired Roller," "Smooth-wheeled Power Roller," "Vibratory Compactor," Tamping Roller," and "Mechanical Tamper" shall be full compensation for all materials, labor, equipment, tools and incidentals necessary to complete the compaction of subgrades in accordance with these specifications.

The proposal quantities for any types of compacting equipment represent the best judgment of the Engineer as to the amount of rolling and compacting that will be necessary to secure compaction of subgrades in accordance with these specifications. The Engineer does not, however, guarantee these quantities, and the Engineer will be the sole judge as to the type of compacting equipment to be used and the number of hours required.

Towing different types of rollers in tandem will not be allowed; however, additional towed rollers of the same type for tandem use with fully powered units may be used when authorized in writing by the Engineer. Additional rollers, when so used, will be paid for by an increase of fifty per cent (50%) in the number of hours for the type of roller and for the time each additional roller is used for subgrade compaction.

Section 16—Water

16–1 DESCRIPTION 27

16–1.01 WATER FOR STREETS 27

16–1.02 WATER FOF TRENCHES

Where watersettling is required for compaction of trench backfill, the jetting method shall be used, as described in Section 16–3.03, unless otherwise provided in the special provisions or directed by the Engineer.

16–2 SOURCE OF WATER AND GENERAL REQUIREMENTS

The Contractor shall, wherever possible, obtain water for construction purposes from Seattle Water Department hydrants or mains, in accordance with the provisions of Section 5.13. When water for construction purposes is not practical from Water Department mains or hydrants, the special provisions of the proposal shall apply.

16–2.01 WATER SUPPLY 27

16–2.02 REQUIREMENTS AND RESPONSIBILITY 27

16–3 CONSTRUCTION DETAILS 28

16–3.01 GENERAL

The Contractor shall furnish all pipe, hose, tools and other equipment necessary for water transmission to the construction beyond the outlets of meters or connections provided by the Seattle Water Department for the watersettling work. For watersettling by the jetting method, as described in Section 16–3.03A, the minimum pressure of the jet pipe when jetting is being performed, shall be thirty-five (35) pounds per square inch. The jet pipe shall be a rigid iron pipe with a minimum discharge opening at the jet end of one (1) inch and of a length that is suitable for the depth of penetration required. In the event the Contractor uses a one inch inside diameter pipe as the jet pipe, the one (1) inch inside diameter section of hose or pipe shall not be longer than one hundred (100) feet and shall be connected to a supply hose or pipe having an inside diameter greater than one (1) inch.

16–3.02 WATER FOR STREETS

Water necessary upon streets for dust control or other purposes in accordance with the project specifications, when within a distance of one thousand (1,000) feet of a hydrant or a connection provided in lieu of a hydrant by the Water Department, shall be applied by the Contractor, and payment for the application of the water to the total extent necessary will be made on a per linear foot basis for the length of street within one thousand (1,000) feet of the supply hydrant or connection in lieu thereof, used for the work. Measurement shall be along the center line of the street right of way.

When water is necessary at distances more than one thousand (1,000) feet distant from a hydrant or a connection furnished by the Water Department for the construction, the Contractor shall furnish hauled water. Hauled water for streets or other right of ways shall be applied by tank trucks equipped with spray bars and suitable apparatus. Where hauled water is required, the tank truck and/or trailer shall meet all safety and licensing regulations and shall be provided with a pump of such size and capacity as to provide a discharge pressure suitable for the purpose. When hauled water is used for watersettling by jetting, the discharge pressure available at the jet pipe shall be as specified in Section 16–3.01.

Payment for hauled water will be made on a par thousand (M) gallon basis for the actual amount used.

16–3.03 WATER FOR SETTLING TRENCHES 28

16–3.03A Jetting

When watersettling trench backfill by jetting, the jet pipes shall be inserted at not more than four (4) foot intervals as measured in any direction through the entire width of the top of trench backfill. Penetration shall be to the crown of the pipe, to native ground on side slopes and to the preceding lift. The jetting operations shall be completed as closely as is practicable to the pipe laying and backfilling operation. In excessively deep trenches and where the Engineer may direct, the backfill shall be placed in two or more lifts and each be jetted separately.

Where the backfill has been placed and traffic has compacted the surface, the Contractor shall loosen and shape the surface with a motor patrol, as directed, before watersettling is begun. Ponding will be required after the jetting only if and whenever the Engineer deems it to be necessary.

Hydrant settling water shall be utilized when hydrants or other sources of water exist within one thousand (1,000) feet of the operations.

Hauling settling water shall be utilized when the watersettling operation is more than one thousand (1,000) feet from a hydrant or connection provided in lieu thereof.

Payment to the Contractor for watersettling trenches with hydrant water by jetting will be made on the basis of linear feet of trench water settled within one thousand (1,000) feet of a hydrant or connection provided in lieu thereof.

16–3.03B Sluicing

The rate and manner of placing the backfill material shall be such as to provide for the sluicing of the entire depth of backfill into its final position.

Payment for sluicing shall be made in the same manner as for jetting.

16–3.04 WATER FOR SETTLING AROUND CATCH BASINS (New Section)

When watersettling for compaction is performed around catch basins, it shall be by the jetting or sluicing methods as directed by the Engineer, and payment to the Contractor therefor will be made on a per each basis.

16–4 MEASUREMENT

Hauled water as hereinbefore defined, will be measured by units of one thousand (M) gallons in tanks or trucks of known capacity, or by means of meters installed by the Seattle Water Department at hydrants or other connections in lieu thereof from which water is obtained by the Contractor.

No measurement will be made other than linear feet along the center line of a street or trench for hydrant water obtained within one thousand (1,000) feet of a Seattle Water Department hydrant or connection in lieu thereof.

16–5 PAYMENT

Payment for water will be made for such of the following bid items as are included in any particular contract.

(1) "Hydrant Water," per linear foot.
(2) "Hauled Water," per M gallons.
(3) "Catch Basin Settling Water," per each.

The above unit contract prices shall be full compensation for furnishing all labor, tools, equipment and other work incidental to the furnishing of water as herein specified.

Section 17—Excavation for Structures

17–1 DESCRIPTION

The provisions of this section of the specifications concern the removal or excavation of all materials of whatsoever nature that is necessary for the construction of footings, bases or any other foundation work required to support pump stations, bridges, retaining walls, headwalls, water tanks, transmission towers, and similar structures, or for the placement of riprap and cribbing.

This section also contains the provisions which govern the construction and subsequent removal of all shoring, cribs, cofferdams or caissons; the pumping which may be necessary for the execution of the work, and the placement and compaction of all necessary backfill.

It is not intended that excavation for culverts, sewers and water mains and their appurtenances, manholes, inlets, and catch basins, conduits and miscellaneous work covered elsewhere in these specifications or in the special provisions shall be considered as structure excavation.

Attention is called to the fact that the provisions of these specifications dealing with a separate payment for shoring and cribs apply only where an item for "Shoring and Cribs or Extra Excavation" appears on the plans and proposal for a specific structure. Where no such item is shown, the cost of any shoring and cribs that may be required shall be included in the unit contract price bid for structure excavation.

17–1.01 CLASSIFICATION 28

17–3 CONSTRUCTION DETAILS 28

17–3.01 PRESERVATION OF CHANNEL 28

17–3.02 EXCAVATION IN OPEN PITS 29

17–3.03 DEPTH OF FOOTINGS 29

17–3.04 PREPARATION FOR PLACING FOUNDATIONS 29

17–3.05 SHORING, CRIBS AND COFFERDAMS 29

17–3.06 PUMPING 29

17–3.07 INSPECTION 29

17–3.08 DISPOSAL OF EXCAVATED MATERIAL 30

17–3.09 BACKFILLING 30

17–3.10 APPROACH EMBANKMENT 30

17–4 MEASUREMENT 30

17–5 PAYMENT 30

17–5.01 STRUCTURE EXCAVATION 30

17–5.02 SHORING AND CRIBS 31

17–5.03 MECHANICAL TAMPERS 31

(Sections Nos. 18, 19 and 20 reserved for possible future use.)

Section 21—Weighing Equipment

21–1 DESCRIPTION 31

21–1.01 WEIGHING EQUIPMENT FOR AGGREGATES AND ROAD MATERIALS FROM BUNKERS 31

21–1.02 UNDERWEIGHTS 31

21–1.03 WEIGHING EQUIPMENT FOR AGGREGATES AND ROAD MATERIALS FROM LOCAL DEPOSITS AND STOCKPILES 31

21–1.04 WEIGHING EQUIPMENT FOR BULK PORTLAND CEMENT 31

21–2 PAYMENT 31

Section 22—Production from Quarry and Pit Sites

22–1 DESCRIPTION

The requirements set forth in this section shall apply only when contract construction work for the City of Seattle is being performed at remote locations outside the metropolitan City area where it is not feasible to obtain mineral aggregate for the construction from sources normally available to the City area. In such locations, as provided in the special provisions for the work, the Contractor shall manufacture crushed stone and screened materials of the kind, quality and grading specified for use in the construction of portland cement concrete, asphalt

15–2.03 PROTECTION OF SUBGRADE

After preparing the final subgrade for cement concrete pavement, as above specified, all unnecessary traffic shall be kept off. The Contractor shall protect the prepared subgrade from both his own and public traffic.

Should it be found necessary by the Contractor to haul concrete aggregate and cement over the prepared subgrade for the actual concrete placing operations, the Contractor at his own expense, will be required to restore the damaged subgrade as a result thereof, by whatever means may be necessary to restore the subgrade to a firm compacted surface at the grade elevation and cross section shown on the plan.

15–3 MEASUREMENT 27

15–4 PAYMENT

Payment will be made for such of the following bid items as are included in the bid proposals:

1. "Variable Load Compactor," per hour.
2. "Grid Roller," per hour.
3. "Pneumatic-tired Roller," per hour.
4. "Smooth-wheeled Power Roller," per hour.
5. "Vibratory Compactor," per hour.
6. "Tamping Roller," per hour.
7. "Mechanical Tamper," per hour.
8. "Hydrant Water," per linear foot.
9. "Hauled Water," per M gallons.

When any work described in this section is required but no item of payment is provided therefor in the proposal, the work required shall be considered as incidental to the construction and all costs thereof shall be included by the Contractor in other pay items of the contract.

All other costs for labor, materials, tools and equipment required for, or incidental to the preparation, shaping, maintaining and protection of the subgrade, except as outlined in Section 15–1, shall be included in the unit contract price in place for the particular class of surfacing or paving involved. No additional payment will be made for the preparation, shaping and protection of the subgrade.

Payment to the Contractor for applying water to the subgrade as required, will be made as specified in Section 16.

The compacting equipment described in Section 15–2.01A will be considered pay items when used for compacting subgrades as specified in Section 15–2.01, and Section 15–2.02 for the initial preliminary subgrade before the setting of forms for the proposed pavement. Compaction required to compact the final subgrade between the pavement forms as specified in Section 39–3.14 will not be a pay item but shall be incidental to the pavement construction and included in the unit bid contract prices for the cement concrete pavement. The accepted hourly quantities for compacting at the contract price per hour for "Variable Load Compactor," "Grid Roller," "Pneumatic-tired Roller," "Smooth-wheeled Power Roller," "Vibratory Compactor," "Tamping Roller" and "Mechanical Tamper" shall be full compensation for all materials, labor, equipment, tools and incidentals necessary to complete the compaction of subgrades in accordance with these specifications.

The proposal quantities for any types of compacting equipment represent the best judgment of the Engineer as to the amount of rolling and compacting that will be necessary to secure compaction of subgrades in accordance with these specifications. The Engineer does not, however, guarantee these quantities, and the Engineer will be the sole judge as to the type of compacting equipment to be used and the number of hours required.

Towing different types of rollers in tandem will not be allowed; however, additional towed rollers of the same type for tandem use with fully powered units may be used when authorized in writing by the Engineer. Additional rollers, when so used, will be paid for by an increase of fifty per cent (50%) in the number of hours for the type of roller and for the time each additional roller is used for subgrade compaction.

Section 16—Water

16–1 DESCRIPTION 27

16–1.01 WATER FOR STREETS

Water for compacting embankment, constructing subgrade, placement of screened gravel and crushed mineral aggregate surfacing, watersettling of trench backfill, for laying dust, mixing concrete on job site, curing concrete and other purposes, as required in accordance with these standard specifications, will be furnished free of charge to the Contractor. Payment for such water, with the approval of the Engineer, will be made from project funds.

When the contract does not include bid items for "Water," the Contractor shall consider all costs for applying the water in the amounts required and places designated as incidental to the construction and included in the various unit bid prices of the contract.

When the contract proposal contains bid items for "Water," payment will be made as specified in Section 16–5.

16–1.02 WATER FOR TRENCHES

Where watersettling is required for compaction of trench backfill, the jetting method shall be used as described in Section 16–3.03A, unless otherwise provided in the special provisions or directed by the Engineer.

16–2 SOURCE OF WATER AND GENERAL REQUIREMENTS 27

16–2.01 WATER SUPPLY

The Contractor shall, whenever possible, obtain water for construction purposes from Seattle Water Department hydrants or mains, in accordance with the provisions of Section 5.13.

16–2.02 REQUIREMENTS AND RESPONSIBILITY 27

16–3 CONSTRUCTION DETAILS 28

16–3.01 GENERAL

The Contractor shall furnish all pipe, hose, tools and other equipment necessary for water transmission from hydrants to location where water is applied.

Where hauled water is required, the tank truck and/or trailer shall meet all safety and licensing regulations and shall be provided with a pump of such size and capacity as to provide a discharge pressure suitable for the purpose. When hauled water is used for watersettling by jetting, the discharge pressure available at the jet pipe shall be not less than thirty-five (35) pounds per square inch.

16–3.02 WATER FOR STREET SURFACING

Water upon streets for settling dust and wetting subgrade mineral aggregate and crushed rock surfacing shall be applied by sprinkling with tank trucks equipped with spray bars and suitable apparatus, unless sprinkling with hose equipment is approved by the Engineer.

16–3.03 WATER FOR SETTLING TRENCHES 28

16–3.03A Jetting

When watersettling trench backfill by jetting, the jet pipes shall be inserted at not more than four (4) foot intervals as measured in any direction through the entire width of the top of trench backfill. Penetration shall be to the crown of the pipe, to native ground on side slopes and to the preceding lift. The jetting operations shall be completed as closely as is practicable to the pipe laying and backfilling operation. In excessively deep trenches and where the Engineer may direct, the backfill shall be placed in two or more lifts and each be jetted separately.

The minimum discharge pressure of the jet pipe nozzle, when jetting is being performed, shall be thirty-five (35) pounds per square inch. The jet pipe shall be a rigid iron pipe with a minimum discharge opening at the jet end of one (1) inch, and of a length that is suitable for the depth of penetration required. In the event the Contractor uses a one (1) inch inside diameter pipe as the jet pipe, the one (1) inch inside diameter section of hose or pipe shall not be longer than one hundred (100) feet and shall be connected to a supply hose or pipe having an inside diameter greater than one (1) inch.

Where the backfill has been placed and traffic has compacted the surface, the Contractor shall loosen and shape the surface with a motor patrol, as directed, before watersettling is begun. Ponding will be required after the jetting only if and whenever the Engineer deems it to be necessary.

16–3.03B Sluicing

The rate and manner of placing the backfill material shall be such as to provide for the sluicing of the entire depth of backfill into its final position.

Payment for sluicing shall be made in the same manner as for jetting.

16–4 MEASUREMENT

Hydrant water will be measured for payment in units of linear feet, measured on the center line of the street, or when for watersettling trenches, on the center line of the trench, for the actual distance that the water is used to complete the construction as approved by the Engineer.

Hauled water will be measured for payment in units of one thousand (M) gallons in tanks or trucks of known capacity, or by means of meters at hydrants from which water is obtained.

16–5 PAYMENT

When no unit prices for "Water" are in the contract, all costs for water shall be considered by the Contractor as incidental to the construction and no separate payment therefor will be made.

Payment for water will be made for such of the following bid items as are included in any particular contract:

(1) "Hydrant Water," per linear foot.
(2) "Hauled Water," per M gallons.

The above unit contract prices shall be full compensation for furnishing all labor, materials, tools and equipment and doing all work incidental to applying the water as hereinbefore specified.

Section 17—Excavation for Structures

17–1 DESCRIPTION

The provisions of this section of the specifications concern the removal or excavation of all materials of whatsoever nature that is necessary for the construction of footings, bases or any other foundation work required to support pump stations, bridges, retaining walls, headwalls, water tanks, transmission towers, and similar structures, or for the placement of riprap and cribbing.

This section also contains the provisions which govern the construction and subsequent removal of all shoring, cribs, cofferdams or caissons; the pumping which may be necessary for the execution of the work, and the placement and compaction of all necessary backfill.

It is not intended that excavation for culverts, sewers and water mains and their appurtenances, manholes, inlets and catch basins, conduits and miscellaneous work covered elsewhere in these specifications or in the special provisions shall be considered as structure excavation. Excavation for the above types of construction, when not incidental to the construction work, is provided for in the contract by the following unit bid items as they may apply; namely:

(a) "Sewer Trench Excavation and Backfill," for sewers, in Section 61.
(b) "Trench Excavation and Backfill," for water distribution, in Section 73.
(c) "Extra Excavation," as described in Section 64–3 for catch basins and Section 73–2.03 for additional depth to water main trenches.
(d) "Extra Work," as provided in Section 9.03.

Attention is called to the fact that the provisions of these specifications dealing with a separate payment for shoring and cribs apply only where an item for "Shoring and Cribs or Extra Excavation" appears on the plans and proposal for a specific structure. Where no such item is shown, the cost of any shoring and cribs that may be required shall be included in the unit contract price bid for structure excavation.

17–1.01 CLASSIFICATION 28

17–3 CONSTRUCTION DETAILS 28

17–3.01 PRESERVATION OF CHANNEL 28

17–3.02 EXCAVATION IN OPEN PITS 29

17–3.03 DEPTH OF FOOTINGS 29

17–3.04 PREPARATION FOR PLACING FOUNDATIONS 29

17–3.05 SHORING, CRIBS AND COFFERDAMS 29

17–3.06 PUMPING 29

17–3.07 INSPECTION 29

17–3.08 DISPOSAL OF EXCAVATED MATERIAL 30

17–3.09 BACKFILLING 30

17–3.10 APPROACH EMBANKMENT 30

17–4 MEASUREMENT 30

17–5 PAYMENT 30

17–5.01 STRUCTURE EXCAVATION 30

17–5.02 SHORING AND CRIBS 31

17–5.03 MECHANICAL TAMPERS 31

(Sections Nos. 18, 19 and 20 reserved for possible future use.)

Section 21—Weighing Equipment

21–1 DESCRIPTION 31

21–1.01 WEIGHING EQUIPMENT FOR AGGREGATES AND ROAD MATERIALS FROM BUNKERS 31

21–1.02 UNDERWEIGHTS 31

21–1.03 WEIGHING EQUIPMENT FOR AGGREGATES AND ROAD MATERIALS FROM LOCAL DEPOSITS AND STOCKPILES 31

21–1.04 WEIGHING EQUIPMENT FOR BULK PORTLAND CEMENT 31

21–2 PAYMENT 31

Section 22—Production from Quarry and Pit Sites

22–1 DESCRIPTION

The requirements set forth in this section shall apply only when contract construction work for the City of Seattle is being performed at remote locations outside the metropolitan City area where it is not feasible to obtain mineral aggregate for the construction from sources normally available to the City area. In such locations, as provided in the special provisions for the work, the Contractor shall manufacture crushed stone and screened materials of the kind, quality and grading specified for use in the construction of portland cement concrete, asphalt

15–2.03 PROTECTION OF SUBGRADE

After preparing the final subgrade for cement concrete pavement, as above specified, all unnecessary traffic shall be kept off. The Contractor shall protect the prepared subgrade from both his own and public traffic.

Should it be found necessary by the Contractor to haul concrete aggregate and cement over the prepared subgrade for the actual concrete placing operations, the Contractor at his own expense, will be required to restore the damaged subgrade as a result thereof, by whatever means may be necessary to restore the subgrade to a firm compacted surface at the grade elevation and cross section shown on the plan.

15–3 MEASUREMENT 27

15–4 PAYMENT

Payment will be made for such of the following bid items as are included in the bid proposals:

1. "Variable Load Compactor," per hour.
2. "Grid Roller," per hour.
3. "Pneumatic-tired Roller," per hour.
4. "Smooth-wheeled Power Roller," per hour.
5. "Vibratory Compactor," per hour.
6. "Tamping Roller," per hour.
7. "Mechanical Tamper," per hour.
8. "Hydrant Water," per linear foot.
9. "Hauled Water," per M gallons.

When any work described in this section is required but no item of payment is provided therefor in the proposal, the work required shall be considered as incidental to the construction and all costs thereof shall be included by the Contractor in other pay items of the contract.

All other costs for labor, materials, tools and equipment required for, or incidental to the preparation, shaping, maintaining and protection of the subgrade, except as outlined in Section 15–1, shall be included in the unit contract price in place for the particular class of surfacing or paving involved. No additional payment will be made for the preparation, shaping and protection of the subgrade.

Payment to the Contractor for applying water to the subgrade as required, will be made as specified in Section 16.

The compacting equipment described in Section 15–2.01A will be considered pay items when used for compacting subgrades as specified in Section 15–2.01, and Section 15–2.02 for the initial preliminary subgrade before the setting of forms for the proposed pavement. Compaction required to compact the final subgrade between the pavement forms as specified in Section 39–3.14 will not be a pay item but shall be incidental to the pavement construction and included in the unit bid contract prices for the cement concrete pavement. The accepted hourly quantities for compacting at the contract price per hour for "Variable Load Compactor," "Grid Roller," "Pneumatic-tired Roller," "Smooth-wheeled Power Roller," "Vibratory Compactor," Tamping Roller," and "Mechanical Tamper" shall be full compensation for all materials, labor, equipment, tools and incidentals necessary to complete the compaction of subgrades in accordance with these specifications.

The proposal quantities for any types of compacting equipment represent the best judgment of the Engineer as to the amount of rolling and compacting that will be necessary to secure compaction of subgrades in accordance with these specifications. The Engineer does not, however, guarantee these quantities, and the Engineer will be the sole judge as to the type of compacting equipment to be used and the number of hours required.

Towing different types of rollers in tandem will not be allowed; however, additional towed rollers of the same type for tandem use with fully powered units may be used when authorized in writing by the Engineer. Additional rollers, when so used, will be paid for by an increase of fifty per cent (50%) in the number of hours for the type of roller and for the time each additional roller is used for subgrade compaction.

Section 16—Water

16–1 DESCRIPTION 27

16–1.01 WATER FOR STREETS 27

16–1.02 WATER FOR TRENCHES

Where watersettling is required for compaction of trench backfill, the jetting method shall be used, as described in Section 16–3.03, unless otherwise provided in the special provisions or directed by the Engineer.

16–2 SOURCE OF WATER AND GENERAL REQUIREMENTS

The Contractor shall, wherever possible, obtain water for construction purposes from Seattle Water Department hydrants or mains, in accordance with the provisions of Section 5.13. When water for construction purposes is not practical from Water Department mains or hydrants, the special provisions of the proposal shall apply.

16–2.01 WATER SUPPLY 27

16–2.02 REQUIREMENTS AND RESPONSIBILITY 27

16–3 CONSTRUCTION DETAILS 28

16–3.01 GENERAL

The Contractor shall furnish all pipe, hose, tools and other equipment necessary for water transmission to the construction beyond the outlets of meters or connections provided by the Seattle Water Department for the watersettling work. For watersettling by the jetting method, as described in Section 16–3.03A, the minimum pressure of the jet pipe when jetting is being performed, shall be thirty-five (35) pounds per square inch. The jet pipe shall be a rigid iron pipe with a minimum discharge opening at the jet end of one (1) inch and of a length that is suitable for the depth of penetration required. In the event the Contractor uses a one inch inside diameter pipe as the jet pipe, the one (1) inch inside diameter section of hose or pipe shall not be longer than one hundred (100) feet and shall be connected to a supply hose or pipe having an inside diameter greater than one (1) inch.

16–3.02 WATER FOR STREETS

Water necessary upon streets for dust control or other purposes in accordance with the project specifications, when within a distance of one thousand (1,000) feet of a hydrant or a connection provided in lieu of a hydrant by the Water Department, shall be applied by the Contractor, and payment for the application of the water to the total extent necessary will be made on a per linear foot basis for the length of street within one thousand (1,000) feet of the supply hydrant or connection in lieu thereof, used for the work. Measurement shall be along the center line of the street right of way.

When water is necessary at distances more than one thousand (1,000) feet distant from a hydrant or a connection furnished by the Water Department for the construction, the Contractor shall furnish hauled water. Hauled water for streets or other right of ways shall be applied by tank trucks equipped with spray bars and suitable apparatus. Where hauled water is required, the tank truck and/or trailer shall meet all safety and licensing regulations and shall be provided with a pump of such size and capacity as to provide a discharge pressure suitable for the purpose. When hauled water is used for watersettling by jetting, the discharge pressure available at the jet pipe shall be as specified in Section 16–3.01.

Payment for hauled water will be made on a par thousand (M) gallon basis for the actual amount used.

16–3.03 WATER FOR SETTLING TRENCHES 28

16–3.03A Jetting

When watersettling trench backfill by jetting, the jet pipes shall be inserted at not more than four (4) foot intervals as measured in any direction through the entire width of the top of trench backfill. Penetration shall be to the crown of the pipe, to native ground on side slopes and to the preceding lift. The jetting operations shall be completed as closely as is practicable to the pipe laying and backfilling operation. In excessively deep trenches and where the Engineer may direct, the backfill shall be placed in two or more lifts and each be jetted separately.

Where the backfill has been placed and traffic has compacted the surface, the Contractor shall loosen and shape the surface with a motor patrol, as directed, before watersettling is begun. Ponding will be required after the jetting only if and whenever the Engineer deems it to be necessary.

Hydrant settling water shall be utilized when hydrants or other sources of water exist within one thousand (1,000) feet of the operations.

Hauling settling water shall be utilized when the watersettling operation is more than one thousand (1,000) feet from a hydrant or connection provided in lieu thereof.

Payment to the Contractor for watersettling trenches with hydrant water by jetting will be made on the basis of linear feet of trench water settled within one thousand (1,000) feet of a hydrant or connection provided in lieu thereof.

16–3.03B Sluicing

The rate and manner of placing the backfill material shall be such as to provide for the sluicing of the entire depth of backfill into its final position.

Payment for sluicing shall be made in the same manner as for jetting.

16–3.04 WATER FOR SETTLING AROUND CATCH BASINS (New Section)

When watersettling for compaction is performed around catch basins, it shall be by the jetting or sluicing methods as directed by the Engineer, and payment to the Contractor therefor will be made on a per each basis.

16–4 MEASUREMENT

Hauled water as hereinbefore defined, will be measured by units of one thousand (M) gallons in tanks or trucks of known capacity, or by means of meters installed by the Seattle Water Department at hydrants or other connections in lieu thereof from which water is obtained by the Contractor.

No measurement will be made other than linear feet along the center line of a street or trench for hydrant water obtained within one thousand (1,000) feet of a Seattle Water Department hydrant or connection in lieu thereof.

16–5 PAYMENT

Payment for water will be made for such of the following bid items as are included in any particular contract.

(1) "Hydrant Water," per linear foot.
(2) "Hauled Water," per M gallons.
(3) "Catch Basin Settling Water," per each.

The above unit contract prices shall be full compensation for furnishing all labor, tools, equipment and other work incidental to the furnishing of water as herein specified.

Section 17—Excavation for Structures

17–1 DESCRIPTION

The provisions of this section of the specifications concern the removal or excavation of all materials of whatsoever nature that is necessary for the construction of footings, bases or any other foundation work required to support pump stations, bridges, retaining walls, headwalls, water tanks, transmission towers, and similar structures, or for the placement of riprap and cribbing.

This section also contains the provisions which govern the construction and subsequent removal of all shoring, cribs, cofferdams or caissons; the pumping which may be necessary for the execution of the work, and the placement and compaction of all necessary backfill.

It is not intended that excavation for culverts, sewers and water mains and their appurtenances, manholes, inlets, and catch basins, conduits and miscellaneous work covered elsewhere in these specifications or in the special provisions shall be considered as structure excavation.

Attention is called to the fact that the provisions of these specifications dealing with a separate payment for shoring and cribs apply only where an item for "Shoring and Cribs or Extra Excavation" appears on the plans and proposal for a specific structure. Where no such item is shown, the cost of any shoring and cribs that may be required shall be included in the unit contract price bid for structure excavation.

17–1.01 CLASSIFICATION 28

17–3 CONSTRUCTION DETAILS 28

17–3.01 PRESERVATION OF CHANNEL 28

17–3.02 EXCAVATION IN OPEN PITS 29

17–3.03 DEPTH OF FOOTINGS 29

17–3.04 PREPARATION FOR PLACING FOUNDATIONS 29

17–3.05 SHORING, CRIBS AND COFFERDAMS 29

17–3.06 PUMPING 29

17–3.07 INSPECTION 29

17–3.08 DISPOSAL OF EXCAVATED MATERIAL 30

17–3.09 BACKFILLING 30

17–3.10 APPROACH EMBANKMENT 30

17–4 MEASUREMENT 30

17–5 PAYMENT 30

17–5.01 STRUCTURE EXCAVATION 30

17–5.02 SHORING AND CRIBS 31

17–5.03 MECHANICAL TAMPERS 31

(Sections Nos. 18, 19 and 20 reserved for possible future use.)

Section 21—Weighing Equipment

21–1 DESCRIPTION 31

21–1.01 WEIGHING EQUIPMENT FOR AGGREGATES AND ROAD MATERIALS FROM BUNKERS 31

21–1.02 UNDERWEIGHTS 31

21–1.03 WEIGHING EQUIPMENT FOR AGGREGATES AND ROAD MATERIALS FROM LOCAL DEPOSITS AND STOCKPILES 31

21–1.04 WEIGHING EQUIPMENT FOR BULK PORTLAND CEMENT 31

21–2 PAYMENT 31

Section 22—Production from Quarry and Pit Sites

22–1 DESCRIPTION

The requirements set forth in this section shall apply only when contract construction work for the City of Seattle is being performed at remote locations outside the metropolitan City area where it is not feasible to obtain mineral aggregate for the construction from sources normally available to the City area. In such locations, as provided in the special provisions for the work, the Contractor shall manufacture crushed stone and screened materials of the kind, quality and grading specified for use in the construction of portland cement concrete, asphalt

15–2.03 PROTECTION OF SUBGRADE

After preparing the final subgrade for cement concrete pavement, as above specified, all unnecessary traffic shall be kept off. The Contractor shall protect the prepared subgrade from both his own and public traffic.

Should it be found necessary by the Contractor to haul concrete aggregate and cement over the prepared subgrade for the actual concrete placing operations, the Contractor at his own expense, will be required to restore the damaged subgrade as a result thereof, by whatever means may be necessary to restore the subgrade to a firm compacted surface at the grade elevation and cross section shown on the plan.

15–3 MEASUREMENT 27

15–4 PAYMENT

Payment will be made for such of the following bid items as are included in the bid proposals:

1. "Variable Load Compactor," per hour.
2. "Grid Roller," per hour.
3. "Pneumatic-tired Roller," per hour.
4. "Smooth-wheeled Power Roller," per hour.
5. "Vibratory Compactor," per hour.
6. "Tamping Roller," per hour.
7. "Mechanical Tamper," per hour.
8. "Hydrant Water," per linear foot.
9. "Hauled Water," per M gallons.

When any work described in this section is required but no item of payment is provided therefor in the proposal, the work required shall be considered as incidental to the construction and all costs thereof shall be included by the Contractor in other pay items of the contract.

All other costs for labor, materials, tools and equipment required for, or incidental to the preparation, shaping, maintaining and protection of the subgrade, except as outlined in Section 15–1, shall be included in the unit contract price in place for the particular class of surfacing or paving involved. No additional payment will be made for the preparation, shaping and protection of the subgrade.

Payment to the Contractor for applying water to the subgrade as required, will be made as specified in Section 16.

The compacting equipment described in Section 15–2.01A will be considered pay items when used for compacting subgrades as specified in Section 15–2.01, and Section 15–2.02 for the initial preliminary subgrade before the setting of forms for the proposed pavement. Compaction required to compact the final subgrade between the pavement forms as specified in Section 39–3.14 will not be a pay item but shall be incidental to the pavement construction and included in the unit bid contract prices for the cement concrete pavement. The accepted hourly quantities for compacting at the contract price per hour for "Variable Load Compactor," "Grid Roller," "Pneumatic-tired Roller," "Smooth-wheeled Power Roller," "Vibratory Compactor," "Tamping Roller" and "Mechanical Tamper" shall be full compensation for all materials, labor, equipment, tools and incidentals necessary to complete the compaction of subgrades in accordance with these specifications.

The proposal quantities for any types of compacting equipment represent the best judgment of the Engineer as to the amount of rolling and compacting that will be necessary to secure compaction of subgrades in accordance with these specifications. The Engineer does not, however, guarantee these quantities, and the Engineer will be the sole judge as to the type of compacting equipment to be used and the number of hours required.

Towing different types of rollers in tandem will not be allowed; however, additional towed rollers of the same type for tandem use with fully powered units may be used when authorized in writing by the Engineer. Additional rollers, when so used, will be paid for by an increase of fifty per cent (50%) in the number of hours for the type of roller and for the time each additional roller is used for subgrade compaction.

Section 16—Water

16–1 DESCRIPTION 27

16–1.01 WATER FOR STREETS

Water for compacting embankment, constructing subgrade, placement of screened gravel and crushed mineral aggregate surfacing, watersettling of trench backfill, for laying dust, mixing concrete on job site, curing concrete and other purposes, as required in accordance with these standard specifications, will be furnished free of charge to the Contractor. Payment for such water, with the approval of the Engineer, will be made from project funds.

When the contract does not include bid items for "Water," the Contractor shall consider all costs for applying the water in the amounts required and places designated as incidental to the construction and included in the various unit bid prices of the contract.

When the contract proposal contains bid items for "Water," payment will be made as specified in Section 16–5.

16–1.02 WATER FOR TRENCHES

Where watersettling is required for compaction of trench backfill, the jetting method shall be used as described in Section 16–3.03A, unless otherwise provided in the special provisions or directed by the Engineer.

16–2 SOURCE OF WATER AND GENERAL REQUIREMENTS 27

16–2.01 WATER SUPPLY

The Contractor shall, whenever possible, obtain water for construction purposes from Seattle Water Department hydrants or mains, in accordance with the provisions of Section 5.13.

16–2.02 REQUIREMENTS AND RESPONSIBILITY 27

16–3 CONSTRUCTION DETAILS 28

16–3.01 GENERAL

The Contractor shall furnish all pipe, hose, tools and other equipment necessary for water transmission from hydrants to location where water is applied.

Where hauled water is required, the tank truck and/or trailer shall meet all safety and licensing regulations and shall be provided with a pump of such size and capacity as to provide a discharge pressure suitable for the purpose. When hauled water is used for watersettling by jetting, the discharge pressure available at the jet pipe shall be not less than thirty-five (35) pounds per square inch.

16–3.02 WATER FOR STREET SURFACING

Water upon streets for settling dust and wetting subgrade mineral aggregate and crushed rock surfacing shall be applied by sprinkling with tank trucks equipped with spray bars and suitable apparatus, unless sprinkling with hose equipment is approved by the Engineer.

16–3.03 WATER FOR SETTLING TRENCHES 28

16–3.03A Jetting

When watersettling trench backfill by jetting, the jet pipes shall be inserted at not more than four (4) foot intervals as measured in any direction through the entire width of the top of trench backfill. Penetration shall be to the crown of the pipe, to native ground on side slopes and to the preceding lift. The jetting operations shall be completed as closely as is practicable to the pipe laying and backfilling operation. In excessively deep trenches and where the Engineer may direct, the backfill shall be placed in two or more lifts and each be jetted separately.

The minimum discharge pressure of the jet pipe nozzle, when jetting is being performed, shall be thirty-five (35) pounds per square inch. The jet pipe shall be a rigid iron pipe with a minimum discharge opening at the jet end of one (1) inch, and of a length that is suitable for the depth of penetration required. In the event the Contractor uses a one (1) inch inside diameter pipe as the jet pipe, the one (1) inch inside diameter section of hose or pipe shall not be longer than one hundred (100) feet and shall be connected to a supply hose or pipe having an inside diameter greater than one (1) inch.

Where the backfill has been placed and traffic has compacted the surface, the Contractor shall loosen and shape the surface with a motor patrol, as directed, before watersettling is begun. Ponding will be required after the jetting only if and whenever the Engineer deems it to be necessary.

16–3.03B Sluicing

The rate and manner of placing the backfill material shall be such as to provide for the sluicing of the entire depth of backfill into its final position.

Payment for sluicing shall be made in the same manner as for jetting.

16–4 MEASUREMENT

Hydrant water will be measured for payment in units of linear feet, measured on the center line of the street, or when for watersettling trenches, on the center line of the trench, for the actual distance that the water is used to complete the construction as approved by the Engineer.

Hauled water will be measured for payment in units of one thousand (M) gallons in tanks or trucks of known capacity, or by means of meters at hydrants from which water is obtained.

16–5 PAYMENT

When no unit prices for "Water" are in the contract, all costs for water shall be considered by the Contractor as incidental to the construction and no separate payment therefor will be made.

Payment for water will be made for such of the following bid items as are included in any particular contract:

(1) "Hydrant Water," per linear foot.
(2) "Hauled Water," per M gallons.

The above unit contract prices shall be full compensation for furnishing all labor, materials, tools and equipment and doing all work incidental to applying the water as hereinbefore specified.

Section 17—Excavation for Structures

17–1 DESCRIPTION

The provisions of this section of the specifications concern the removal or excavation of all materials of whatsoever nature that is necessary for the construction of footings, bases or any other foundation work required to support pump stations, bridges, retaining walls, headwalls, water tanks, transmission towers, and similar structures, or for the placement of riprap and cribbing.

This section also contains the provisions which govern the construction and subsequent removal of all shoring, cribs, cofferdams or caissons; the pumping which may be necessary for the execution of the work, and the placement and compaction of all necessary backfill.

It is not intended that excavation for culverts, sewers and water mains and their appurtenances, manholes, inlets and catch basins, conduits and miscellaneous work covered elsewhere in these specifications or in the special provisions shall be considered as structure excavation. Excavation for the above types of construction, when not incidental to the construction work, is provided for in the contract by the following unit bid items as they may apply; namely:

(a) "Sewer Trench Excavation and Backfill," for sewers, in Section 61.
(b) "Trench Excavation and Backfill," for water distribution, in Section 73.
(c) "Extra Excavation," as described in Section 64–3 for catch basins and Section 73–2.03 for additional depth to water main trenches.
(d) "Extra Work," as provided in Section 9.03.

Attention is called to the fact that the provisions of these specifications dealing with a separate payment for shoring and cribs apply only where an item for "Shoring and Cribs or Extra Excavation" appears on the plans and proposal for a specific structure. Where no such item is shown, the cost of any shoring and cribs that may be required shall be included in the unit contract price bid for structure excavation.

17–1.01 CLASSIFICATION 28

17–3 CONSTRUCTION DETAILS 28

17–3.01 PRESERVATION OF CHANNEL 28

17–3.02 EXCAVATION IN OPEN PITS 29

17–3.03 DEPTH OF FOOTINGS 29

17–3.04 PREPARATION FOR PLACING FOUNDATIONS 29

17–3.05 SHORING, CRIBS AND COFFERDAMS 29

17–3.06 PUMPING 29

17–3.07 INSPECTION 29

17–3.08 DISPOSAL OF EXCAVATED MATERIAL 30

17–3.09 BACKFILLING 30

17–3.10 APPROACH EMBANKMENT 30

17–4 MEASUREMENT 30

17–5 PAYMENT 30

17–5.01 STRUCTURE EXCAVATION 30

17–5.02 SHORING AND CRIBS 31

17–5.03 MECHANICAL TAMPERS 31

(Sections Nos. 18, 19 and 20 reserved for possible future use.)

Section 21—Weighing Equipment

21–1 DESCRIPTION 31

21–1.01 WEIGHING EQUIPMENT FOR AGGREGATES AND ROAD MATERIALS FROM BUNKERS 31

21–1.02 UNDERWEIGHTS 31

21–1.03 WEIGHING EQUIPMENT FOR AGGREGATES AND ROAD MATERIALS FROM LOCAL DEPOSITS AND STOCKPILES 31

21–1.04 WEIGHING EQUIPMENT FOR BULK PORTLAND CEMENT 31

21–2 PAYMENT 31

Section 22—Production from Quarry and Pit Sites

22–1 DESCRIPTION

The requirements set forth in this section shall apply only when contract construction work for the City of Seattle is being performed at remote locations outside the metropolitan City area where it is not feasible to obtain mineral aggregate for the construction from sources normally available to the City area. In such locations, as provided in the special provisions for the work, the Contractor shall manufacture crushed stone and screened materials of the kind, quality and grading specified for use in the construction of portland cement concrete, asphalt

cement concrete pavements, crushed stone and screened, gravel, mineral aggregate surfacing courses of all descriptions.

22–2 MATERIALS 31
22–3 CONSTRUCTION DETAILS 32
22–3.01 ACQUISITION OF SITES 32
22–3.02 PREPARATION OF SITE 32
22–3.03 PRODUCTION 32
22–3.04 FINAL CLEANUP 33
22–4 PAYMENT 33

Section 23—Crushed Surfacing, Ballasting and Stockpiling

23–1 DESCRIPTION 33
23–2 MATERIALS 34
23–2.01 CRUSHED SURFACING 34

23–2.02 BALLAST

Ballast shall consist of crushed, partially crushed or naturally occurring granular material from approved sources manufactured in accordance with the provisions of Section 22. In the manufacture of ballast all oversize material up to and including boulders of ten inches in the greatest dimension shall be utilized in the manufacture of the finished product.

The material from which ballast is to be manufactured shall meet the following test requirement:

Los Angeles Wear, 500 Rev. (ASTM Designation C 131) 30% maximum.

Ballast shall meet the following requirements for grading and quality:

% Passing 2½" square sieve.....100
% Passing 2" square sieve.....65 to 100
% Passing 1" square sieve.....50 to 80
% Passing ¼" square sieve.....30 to 50
% Passing U. S. No. 40 sieve.....16 max.
% Passing U. S. No. 200 sieve (wet sieving) 9 max.

All percentages are by weight.

Dust ratio:

% Passing #200 (wet sieving) / % Passing #40 — 2+3 max.

Sand equivalent (Section 6).....35 min.

The portion of ballast retained on a ¼-inch square sieve shall not contain more than 0.2% wood waste. Wood waste shall be defined as all material which has a specific gravity less than 1.0 after drying to constant weight.

The portion of ballast passing a U. S. No. 10 sieve shall not have wood waste that will result in more than 250 parts per million of organic matter by colorimetric test when tested in accordance with Section 39–2.02B1 except that the color shall be measured after the sample has been in the test solution for one hour.

23–3 CONSTRUCTION DETAILS 34
23–3.01 STOCKPILING SURFACING MATERIAL 34
23–3.02 SUBGRADE 34
23–3.03 SHOULDERS 34
23–3.04 DEPTH OF LAYERS 34
23–3.05 SPREADING MATERIALS 34
23–3.06 ROLLING 35
23–3.07 LOADING AGGREGATE FROM STOCKPILE 35
23–3.08 HAULING 35
23–3.09 CORRECTION OF SURFACE DEFECTS..... 35
23–3.10 FLOATING OR LOOSE STONE..... 35

23–3.11 HOURS OF WORK

The Contractor shall arrange his surfacing operations so that the work is performed in accordance with the requirements of Section 7.07A.

23–3.12 UNFAVORABLE WEATHER 35
23–3.13 PATROLLING 35
23–3.14 EQUIPMENT 35
23–3.15 WATER 35
23–3.16 CONSTRUCTION OF COURSES..... 35
23–3.16A Ballast 35
23–3.16B Base Course 35
23–3.16C Top Course 35
23–3.16D Maintenance Rock 36
23–3.17 RESURFACING 36
23–3.18 REMOVING AND REPLACING SURFACING MATERIAL 36
23–3.19 FINAL CLEANING UP 36
23–3.20 MAINTENANCE DURING SUSPENSION OF WORK PERIOD 36
23–3.21 APPLICATION OF DUST PALLIATIVE OIL (New Section)

When required by the plans in the special provisions or when directed by the Engineer, completed crushed rock surfacing courses or roadways shall be given two or more applications of dust palliative oil to the limits specified.

Dust palliative shall be P.S. 300 oil and shall be uniformly applied by an approved pressure-type distributor at the rate of three-tenths (0.3) gallons of oil per square yards of surface to bet treated. Before succeeding applications of dust palliative are applied, the preceding application shall have thoroughly dried, as approved by the Engineer.

Dust palliative shall not be applied upon a wet surface nor when the temperature is below 40° F.

23–4 MEASUREMENT

Crushed surfacing materials will be measured by the ton in trucks at the point of loading, unless shown by the cubic yard in the proposal, in which case measurement will be made in trucks at the point of delivery in accordance with special provisions therefor. The provisions of Section 21 shall apply when measurement is by the ton.

Crushed surfacing materials for placement in stockpile will likewise be measured by the ton, unless the special provisions and proposal show measurement by the cubic yard, in which case the volume of pay material will be determined by cross sectioning the stockpile.

Top course surfacing material when used as keystone will be measured in the same manner as top course surfacing material, regardless of the classification of the course in which it is used.

Ballast consisting of crushed stone or naturally occurring granular material shall be measured in the same manner as crushed surfacing materials.

"Water" shall be measured as provided for in Section 16.

"Filler" will be measured in accordance with the provisions of Section 24.

Maintenance rock will be measured by the ton or by the cubic yard in trucks at the point of delivery.

Rolling equipment shall be measured as provided in Section 15.

Dust palliative oil shall be measured in barrels used. One barrel equal to forty-two (42) gallons.

23–5 PAYMENT

Payment will be made for such of the following bid items as are included and shown in any particular contract:

1. "Crushed Surfacing, Top Course (or Base Course)," per ton or cubic yard.
2. "Crushed Surfacing, Top Course (or Base Course)," per ton cr cubic yard.
3. "Crushed Surfacing, Top Course (or Base Course) from Stockpile," per ton or cubic yard.
4. "Ballast," per ton or cubic yard.
5. "Ballast in Stockpile," per ton or per cubic yard.
6. "Ballast from Stockpile," per ton or per cubic yard.
7. "Hydrant Water," per linear foot.
8. "Hauled Water," per M gallons.
9. "(Kind) Filler," per ton or per cubic yard.
10. "Maintenance Rock (size) in Stockpile," per ton or per cubic yard.
11. "Smooth-wheeled Power Roller," per hour.
12. "Pneumatic-tired Roller," per hour.
13. "Dust Palliative," per barrel.

Crushed surfacing materials shall be paid for at the unit contract price per ton of 2,000 pounds, or per cubic yard when so shown in the proposal.

Top course surfacing material when used as keystone shall be paid for as top course surfacing material, regardless of the classification of the course in which it is used.

Ballast consisting of crushed or naturally occurring granular material shall be paid for in the same manner as crushed surfacing materials.

Removing and replacing surfacing material shall be paid for at the unit contract price per cubic yard, when shown in the proposal.

Water shall be paid for at the unit contract price per linear foot and per one thousand (M) gallons, whichever unit applies as specified in Section 16.

"Filler" will be paid for in accordance with the provisions of Section 24.

The unit contract price per ton or per cubic yard for "Maintenance Rock ½" Minus in Stockpile," shall be full compensation for furnishing all labor, materials, tools and equipment required to manufacture the material in accordance with these specifications, and to haul and place it in stockpiles at designated sites.

All costs involved in preparing stockpile sites shall be included in the unit contract price for maintenance rock, excepting however, that clearing and grubbing of the designated sites will be measured and paid for in accordance with Section 12 when such bid items are shown in the proposal of any particular project, and not otherwise.

All items of work and materials required by these specifications for which no payment is specified or provided, shall be considered incidental to and a part of the items for which payment is specified and the cost of such work and materials shall be included in the unit contract prices for the pay items shown on the plans.

The unit contract prices for the pay items enumerated shall be full compensation for furnishing all materials, labor, tools and equipment necessary for the fulfillment of all the requirements of these specifications and those of any other pertinent specifications, in the execution of the work shown on the plans, or as ordered by the Engineer; also for all expense incurred in consequence of or discontinuance of the work covered by these specifications.

Section 24—Filler

24–1 DESCRIPTION 37
24–2 MATERIALS 37
24–2.01 SAND FILLER 37
24–2.02 CRUSHED FILLER 37
24–3 CONSTRUCTION DETAILS 37
24–4 MEASUREMENT 37
24–5 PAYMENT 37

Section 25—Screened Gravel Surfacing—One Course

25–1 DESCRIPTION 37
25–2 MATERIALS 37
25–3 CONSTRUCTION DETAILS 38
25–4 MEASUREMENT 38
25–5 PAYMENT 38

Section 26—Bank Run Gravel, Mineral Aggregates for Streets (Title changed for City use)

26–1 DESCRIPTION 38

26–1.01 MINERAL AGGREGATES (New Section)

Mineral aggregates are classified graded mineral aggregates as hereinafter described for backfilling excavations, bedding for pipes, ballasting or surfacing materials.

Mineral aggregates shall conform to the grading requirements of Section 26–3.05.

26–2 MATERIAL 38
26–2.01 CLASSES AND GRADING OF BANK RUN GRAVEL 38
26–2.02 BANK RUN GRAVEL FROM SPECIFIED SOURCES 38
26–2.03 BANK RUN GRAVEL FROM SOURCES PROVIDED BY THE CONTRACTOR..... 38
26–3 CONSTRUCTION DETAILS 38

26–3.01 REMOVAL OF OVERBURDEN

Before any of the bank run gravel material is removed, the site shall be cleared and grubbed and all debris shall be disposed of by the Contractor. The entire area from which bank run gravel is to be taken shall be stripped of all earth and any other material unsuitable as bank run gravel. All overburden materials shall be conveyed by the Contractor to a location which will insure against any part of such overburden becoming mixed with the selected material.

26–3.02 PREPARATION OF ROADBED..... 39
26–3.03 CONSTRUCTION OF COURSES..... 39
26–3.04 PIT OPERATIONS 39

26–3.05 MINERAL AGGREGATES (New Section)

Mineral aggregate shall be free from wood, roots, bark or other extraneous material.

Classification of mineral aggregates shall be by type number and for each type specified the grading shall conform to the following requirements:

REQUIREMENTS FOR MINERAL AGGREGATES

Aggregate Type No.	Nature	Los Angeles Abrasion (Max.) Per	Sieve Analysis—Per Cent Passing 200	50	8	¼	⅜	½	¾	1½	3	Plasticity Index (Max.)	Liquid Limit (Max.)
1	Crushed Ledge Rock..	35	10 Max.	.....	.....	50-65	65-80	.....	90-100	.....	.....	1	25
2	Crushed Ledge Rock..	35	7.5 Max.	.....	.....	30-50	.....	.....	55-80	95-100	.....	1	25
3	Washed Sandy Gravel	30	0-1	.....	.....	20-40	.....	.....	.....	.....	100	..	....
4	Washed Sand		0-2	10-30	65-95	100	.....	.....	.....	.....	.....	..	....
5	Washed Gravel	30	0-1	.....	.....	2-8	.....	12-34	30-60	95-100	.....	..	....
6	Washed Gravel	30	0-1	.....	.....	5-20	.....	30-60	60-90	100	.....	..	....
7	Washed Gravel	30	0-1	.....	0-8	95-100	.....	.....	.....	.....	.....	..	....
8	Pit Run Sand		0-15	10-60	40-100	90-100	.....	.....	.....	.....	.....	3	30
9	Pit Run Sand	30	0-5	.....	0-8	.....	.....	.....	.....	100	.....	3	30
10	Pit Run Sandy Gravel	30	0-10	.....	20-40	.....	.....	.....	.....	100	.....	3	30
11	Pit Run Sandy Gravel	30	0-10	.....	20-40	.....	.....	.....	100	.....	.....	3	30

26–4 MEASUREMENT

Bank run gravel, Class A or Class B, will be measured by the ton in trucks at the point of loading if the quantity is enough to justify the use of scales, or by the cubic yard measured in trucks at the point of delivery, in accordance with whichever unit is shown on the plans and proposal.

The pay quantity for bank run gravel, Class A or Class B, produced from a source provided by the City shall be the actual quantity delivered and used on the roadway except that water content in excess of eight (8) per cent by weight, including water absorbed by the material, shall be deducted from the tonnage to be paid for if payment by the ton is specified. Crushed surfacing used for compensating lower resistance value or higher swell pressure than bank run gravel produced from a source provided by the City, shall be measured and paid for as "Bank Run Gravel, Class A or Class B."

If bank run gravel from a source provided by the Contractor has lower resistance value or higher swell pressure than that specified, the pay quantity of "Bank Run Gravel, Class A or Class B," shall be the quantity of bank run gravel actually delivered and used on the roadway, less water in excess of eight (8) per cent by weight, plus the quantity of crushed surfacing, if any, used to compensate for lower resistance value or higher swell pressure, as described in Section 26–2.03. In no such case shall the crushed surfacing used to compensate for lower values than that specified, be included in any pay item for crushed surfacing.

The quantity of bank run gravel, Class A or Class B, shall not include waste material or any material not suitable for the purpose intended.

Mineral aggregate, as described in Section 26–3.05, will be measured for payment on the basis of cubic yards or by the ton, whichever unit is specified in the proposal.

26–5 PAYMENT

Payment will be made for such of the following bid items as are included and shown in any particular contract:

(1) "Bank Run Gravel (Class A or Class B)," per ton or cubic yard.
(2) "Clearing" and "Grubbing," per acre (or lump sum).
(3) "Stripping Quarries and Pits," per cubic yard.
(4) "Smooth-wheeled Power Roller," per hour.
(5) "Pneumatic-tired Roller," per hour.
(6) "Grid Roller," per hour.
(7) "Mineral Aggregate Type No .....," per cubic yard or per ton.
(8) "Hydrant Water," per linear foot.
(9) "Hauled Water," per M gallons.

The unit contract price per ton or cubic yard for "Bank Run Gravel (Class A or Class B)," shall be full compensation for furnishing all material, labor, tools, equipment and all other costs and expense necessary or incidental to the preparation of the roadbed, excavating, loading, hauling the full distance, placing and blading the bank run gravel and for which not other specific bid item is provided.

Clearing and grubbing for borrow pits will be measured and paid for in accordance with the provisions of Section 12.

"Stripping Quarries and Pits," will be measured and paid for in accordance with provisions of Section 13.

Rolling equipment will be measured and paid for in accordance with the provisions of Section 15.

The unit contract price per cubic yard or per ton for "Mineral Aggregate Type No.....," shall be full compensation for furnishing the material, its delivery and placement for the specific purpose for which the bid item applies for which no other specific bid item is provided.

Water will be measured and paid for in accordance with the provisions of Section 16.

Section 27—Asphalt Materials

27–1 DESCRIPTION 40
27–1.01 ASPHALT MATERIAL 40
27–1.01A Slow Curing Liquid Asphalt 40
27–1.01B Medium Curing Liquid Asphalt 40
27–1.01C Rapid Curing Liquid Asphalt 40
27–1.01C1 Alternate Viscosity Requirements 41
27–1.01D Paving Asphalts 41
27–1.01E Asphalt for Sub-sealing and Crack Pouring 41
27–1.01F Emulsified Asphalt 41
27–1.01G Test Methods 42
27–1.01H Change in Grades 42
27–1.01I Notice of Shipment 42
27–1.01J Samples 42
27–1.01K Basis of Measurement 42
27–1.01L Temperature of Application 42
27–1.01M Unauthorized Grades 43
27–1.01N Antistripping Additive 43

(Section Nos. 28, 29, 30 and 31 reserved for possible future use.)

Section 32—Bituminous Surface Treatment

32–1 DESCRIPTION 43
32–2 MATERIALS 43
32–2.01 ASPHALT 43
32–2.02 MINERAL AGGREGATE 43
32–2.02A General Requirements 43
32–2.02B Test Requirements 43
32–3 CONSTRUCTION DETAILS 44
32–3.01 PREPARATION OF UNTREATED ROADWAY 44
32–3.02 FIRST APPLICATION OF ASPHALT 44
32–3.03 SECOND APPLICATION OF ASPHALT 44
32–3.04 ADDITIONAL ASPHALT AND MINERAL AGGREGATE 45
32–3.05 PATCHING 45
32–3.06 CORRECTION OF DEFECTS 45
32–3.07 PROTECTION OF STRUCTURES 45
32–3.08 UNFAVORABLE WEATHER 45
32–3.09 MAINTENANCE 45
32–3.10 PROGRESS OF WORK 45
32–3.11 ORGANIZATION AND EQUIPMENT 45
32–3.12 TRAFFIC AND DETOURS 46
32–3.13 FINISHING AND CLEANUP 46

32–4 MEASUREMENT AND PAYMENT

Payment will be made for such of the following bid items as appear on the contract bid proposal and in accordance with requirements described hereinafter:

1. "Preparation of Untreated Roadway," per square yard.
2. "Asphalt (grade)," per ton.
3. "Crushed Stone Surfacing Top Course," per cubic yard, or per ton.
4. "Crushed Cover Stone," per cubic yard, or per ton.
5. "Removal of Excess Surfacing Material," per cubic yard.
6. "Hydrant Water," per linear foot.
7. "Hauled Water," per M gallons.
8. "Finishing and Cleanup," per lump sum, or per station (100').

32–4.01 PREPARATION OF UNTREATED ROADWAY 46
32–4.02 ASPHALT 46
32–4.03 CRUSHED STONE SURFACING AND CRUSHED COVER STONE 46

32–4.04 WATER

Water shall be paid for in accordance with the unit contract price per (M) gallons, or per linear foot for "Water," which shall be full compensation for placing the water, as required in accordance with Section 16.

32–4.05 REMOVAL OF EXCESS SURFACING MATERIAL 46
32–4.06 FINISHING AND CLEANUP 46
32–4.07 INCIDENTAL WORK 46

Section 33—Bituminous Plant Mix Pavement

33–1 DESCRIPTION 46
33–2 MATERIALS 46
33–2.01 ASPHALT 46
33–2.02 MINERAL AGGREGATE 47

33–2.02A General Requirements

The material from which mineral aggregate for plant mix is manufactured shall meet the following test requirements:

Los Angeles Wear, 500 Rec., ASTM Designation C 131, 30% Max.

Mineral aggregate for plant mix shall be manufactured from ledge rock, talus or gravel in accordance with Section 22. It shall be clean, uniform in quality and substantially free from wood, roots, bark or other extraneous material. It shall not have deleterious coatings which will not become detached during the mixing process.

33–2.02B Test Requirements 47

33–2.02C Grading of Mineral Aggregate

Mineral aggregate furnished by the Contractor for the bituminous plant mix shall meet the requirement therefor in Section 33–2D.

33–2.02D Proportions of Materials

The materials of which the bituminous mixture is composed shall be of such sizes and grading that, when proportioned and mixed together, they will produce a uniformly graded mixture which will conform to the quality requirements of Section 33–2.02B and to the grading requirements of the table that follows.

The percentages of aggregates below refer to the complete dry mix. The percentage of asphalt refers to the complete bituminous mix. All percentages are by weight.

% Passing ¾" sieve (square opening) 100
% Passing ½" sieve (square opening) 80-100
% Passing ¼" sieve (square opening) 45- 75
% Passing U. S. No. 10 sieve 30- 40
% Asphalt 4- 7

The exact proportions of the several constituents to be used in the production of the bituminous mixture will be fixed within the above limits by the Engineer to provide a pavement having stabilometer and cohesiometer values, and surface texture satisfactory to the Engineer. The proportions so fixed shall be changed only upon his order.

The pay item for the additional natural sand or fine screenings will be designated as "Blending Sand," the unit contract price per cubic yard of which shall include the costs at the source, hauling and incorporating the material in the mixed aggregate, satisfactory to the Engineer. Measurement will be by the cubic yards in trucks at the mixing plant, unless the special provisions provide another unit of measurement.

All asphalt plants shall be provided with adequate means for bin sampling, and a safe means for obtaining representative bin samples while the plant is in operation.

All asphalt proportioning plants shall be provided with adequate means for weighing separately the discharge from each hot stone gate or metering device.

Asphalt of 85-100 penetration will be used unless otherwise provided in the special provisions, or directed by the Engineer.

33–2.02E Stockpiling Mineral Aggregates

Stockpiling of mineral aggregates, other than in bins or piles at the mixing plant, as described hereinafter in Section 33–3.03, will not be required for City projects unless provided for in the special provisions.

33–3 CONSTRUCTION DETAILS 47

33–3.01 PREPARATION OF BASE OR SUBGRADE.... 47

33–3.01A Preparation of Asphalt, Concrete or Brick Surfaces 47

33–3.01B Preparation of Untreated Roadway 48

33–3.01C Removing Existing Pavement

Where shown on the plans or where designated by the Engineer, the existing pavement of the type shown on the plans shall be broken up, loaded, hauled and disposed of in accordance with requirements outlined in Section 52, entitled "Removal of Existing Street Improvements."

Care shall be taken not to damage any of the exisiting pavement left in place or other related facilities, and any damage due to negligence shall be made good or be replaced by the Contractor at his expense. Removal of existing pavement will be paid for upon the unit contract price per square yard of pavement removed unless otherwise provided in the special provisions. Bituminous mats of any kind less than four (4) inches in thickness upon a granular material or earth base shall not be considered as pavement and its removal shall be included in the quantities of and paid for at the unit contract price for excavation of the class shown on the plans and proposal.

33–3.02 CONNECTIONS WITH EXISTING FACILITIES

Where the bituminous plant mix pavement is to be connected with any existing roadway surface, bridge, railway crossing or other facility, the Contractor will be required, under direction of the Engineer, to modify the existing roadway profile in such a manner as to produce a smooth riding connection to the existing facility.

Where it is necessary to remove existing asphalt surfaces or oil mat surfaces to provide proper meet lines and riding surfaces, the Contractor shall burn or chip the existing surface so that there will be sufficient depth to provide a minimum of one (1) inch of bituminous plant mix, and the waste material shall be disposed of by the Contractor. Prior to placing the bituminous plant mix, the disturbed areas shall be tacked in accordance with requirements in Section 33–3.01A.

Meet lines shall be straight and the edges be vertical. The edges of the meet line cuts shall be painted with diluted cutback asphalt cement or SS-1 emulsion prior to the placing of bituminous plant mix. After placing the mix, the meet line shall be sealed by painting with a cutback asphalt or SS-1 emulsion and immediately be covered with clean dry sand. Chipping or burning will be paid for at the unit contract price per square yard for "Chipping Existing Asphalt Surface."

Where it is required to remove sections of existing pavement such as portland cement concrete, cobblestone, brick and other rigid type, the removal shall be performed and be paid for as described in Section 52, entitled "Removal of Existing Street Improvements."

33–3.03 PREPARATION AND HEATING AGGREGATES 48

33–3.03A Operation of Asphalt Plant 48

33–3.03B Plant Capacity 48

33–3.04 HEATING ASPHALT 48

33–3.05 PROPORTIONING

Proportioning of aggregates for bituminous plant mix pavement shall be as specified for proportioning of asphalt concrete pavement in Section 34–3.05.

33–3.06 MIXING 49

33–3.07 HAULING 49

33–3.08 SPREADING AND FINISHING 49

33–3.09 COMPACTING 50

33–3.10 PRELEVELING FOR BITUMINOUS PLANT MIX 50

33–3.11 CONSTRUCTION OF COURSES 50

33–3.12 JOINTS 51

33–3.13 ADJUSTMENT OF EXISTING CASTINGS TO FINISH GRADE 51

33–3.14 SURFACE SMOOTHNESS 51

33–3.15 HEATER-PLANING BITUMINOUS PAVEMENT 51

33–3.15A General

Where shown on the plans or where directed by the Engineer, the existing bituminous pavement shall be planed in accordance with the specifications that follow.

This item shall consist of planing or shaving the surface irregularities from the existing bituminous pavement to produce a smooth surface by means of equipment hereinafter specified. The finished surface shall be free from gouges, grooves, ridges and other imperfections of workmanship.

The temperature at which the work is performed, the nature and condition of the equipment, and the manner of performing the work shall be such that the pavement will not be torn, broken, burned or otherwise injured by the planing operation.

All cuttings or other debris resulting from the heater-planing operations shall be entirely removed and disposed of by the Contractor. No separate payment will be made for disposal of debris by the Contractor, all costs therefor shall be incidental to the work and included in the unit contract price for "Heater-Planing Bituminous Pavement."

33–3.15B Equipment 51

33–3.16 MISCELLANEOUS DETAILS OF CONSTRUCTION 51

33–3.71 SAMPLES 51

33–3.18 FINISHING AND CLEANUP

Finishing and cleanup shall be performed as specified in Sections 4.08 and 57.

Payment therefore shall be incidental to the contract work when no bid item for "Finishing and Cleanup" is included in the proposal.

33–3.19 UNFAVORABLE WEATHER 51

33–3.20 MAINTENANCE OF TRAFFIC AND TRAFFIC SIGNS 51

33–3.21 ORGANIZATION AND EQUIPMENT 52

33–4 MEASUREMENT AND PAYMENT

Payment will be made for such of the following bid items as are included and shown in any particular contract:

1. "Preparation of Untreated Roadway," per square yard, per mile or per lump sum.
2. "Asphalt (grade) Prime Coat," per ton.
3. "Prime Coat Aggregate," per cubic yard, or per ton.
4. "Asphalt for Tack Coat," per ton.
5. "Bituminous Plant Mix," per ton.
6. "Blending Sand," per cubic yard.
7. "Water," per linear foot, or per M gallon.
8. "Finishing and Cleanup," per lump sum, or per station (100').
9. "Remove Existing Pavement (class)," per square yard.
10. "Chipping Existing Asphalt Surface," per square yard.
11. "Heater-Planing Bituminous Pavement," per hour.

33–4.01 PREPARATION OF UNTREATED ROADWAY 52

33–4.02 ASPHALT PRIME COAT 52

33–4.03 PRIME COAT AGGREGATE 52

33–4.04 ASPHALT FOR TACK COAT 52

33–4.05 BITUMINOUS PLANT MIX

The unit contract price per ton for "Bituminous Plant Mix," shall be full compensation for furnishing all labor, equipment, materials and supplies required in the construction of the bitumnious plant mix surface, complete in place, including the preparation of any exisiting cement concrete, brick or bituminous pavement surfaces upon which the bituminous plant mix is to be placed, and all other work incidental to fulfilling the requirements described in Section 33–3 and not set forth as bid items of any particular contract.

33–4.06 MINERAL AGGREGATES IN STOCKPILE (Not used)

Refer to Section 33–2.02E.

33–4.07 BLENDING SAND

The unit contract price per cubic yard for "Blending Sand," shall be full compensation for all costs in connection with the furnishing, hauling and incorporating blending sand in the mixed aggregate, as required by the Engineer. Unless otherwise specified, measurement will be by the cubic yard in trucks at the plant.

33–4.08 WATER

Water will be measured and paid for as provided in Section 16.

33–4.09 FINISHING AND CLEANUP

Cleanup shall be paid for by the lump sum, or per station (100'), only when a bid item therefore is included in the proposal. The unit contract price shall be full compensation for all costs incurred by the Contractor in performing the cleanup in accordance with the plans and specifications in Section 57, and directions of the Engineer.

33–4.10 REMOVING EXISTING PAVEMENT

The unit contract price per square yard for "Remove Existing Pavement (class)," shall be full compensation for all removing of the existing rigid type pavement as described in Section 52, and disposing of it by the Contractor.

33–4.11 CHIPPING EXISTING ASPHALT SURFACE 53

33–4.12 INCIDENTAL WORK 53

33–4.13 HEATER-PLANING BITUMINOUS PAVEMENT (New Section)

The unit contract price per hour for "Heater-Planing Bituminous Pavement" will be paid for the actual time consumed in heater-planing and shall be full compensation for furnishing all tools, equipment, labor, materials, supplies and incidentals necessary to accomplish the work in accordance with the specifications. The unit contract price shall includes also the removal and disposal of all cuttings and debris, and all other costs reguired to accomplish the work. No allowance will be made for time consumed in making repairs to the equipment or for moving the equipment to or from the work.

Section 34—Asphalt Concrete Pavement

34–1 DESCRIPTION

These specifications shall apply to the construction of pavements having bituminous surfaces constructed for City arterial and residential streets as shown by the pavement cross sections (B) and (C) of Standard Plans Nos. 102, 102.1 and 103 respectively.

Asphalt cement concrete for such pavements shall be composed of asphalt and mineral aggregate, coarse and fine, which with or without the addition of mineral filler or blending sand as may be required, shall be mixed in the proportions hereinafter specified.

The Contractor shall furnish all mineral and asphalt material required for the asphalt cement concrete unless otherwise provided in the special provisions of the proposal.

34–2 MATERIALS 53

34–2.01 ASPHALT 53

34–2.02 MINERAL AGGREGATE 53

34–2.02A General Requirements

The material from which mineral aggregate for asphalt concrete is manufactured shall meet the following test requirements:

Los Angeles Wear (ASTM Designation C 131) 500 Rev. 30% Max.

Mineral aggregate for asphalt concrete shall be manufactured from ledge rock or gravel. It shall be uniform in quality, substantially free from wood, roots, bark or other extraneous materials, and free from adherent coatings. The presence of a thin, firmly adhering film of weathered rock will not be considered as coating unless it exists on more than fifty (50) per cent of the surface area of any size between consecutive laboratory sieves.

Mineral aggregate removed from deposits contaminated with various types of wood waste shall be washed, processed, selected or otherwise treated to remove as much of the wood waste as possible from the finished product. The Engineer may require the material to be washed, if, in his judgment, an undue amount of wod contamination will otherwise be present in the finished porduct.

Mineral aggregate retained on a ¼-inch square sieve will be considered free from wood waste if the oven-dried aggregate does not contain more than 0.1% by weight of material with a specific gravity less than 1.0.

Mineral aggregate passing a U. S. No. 10 sieve shall not have wood waste that will result in more than 250 parts per million of organic matter by colorimetric tests when tested in accordance with Section 39–2.02B1, except that the color shall be measured after the sample has been in test solution one hour.

34–2.02B Test Requirements

Mineral aggregate for asphalt concrete shall meet the following test requirements:

Fracture(each size coarser than U. S. No. 10); two fractured faces 90% minimum.

Sand-equivalent (Section 6), 45 Min.

When mineral aggregate is combined within the limits set forth under Section 34–2.03 and mixed with the grade

and amount of asphalt cement recommended by the Engineer, it shall meet the following requirements:

Stabilometer value (Section 6), 30 Min.

Cohesiometer value (Section 6), 100 Min.

Modified immersion compression (M.I.C.) test (Section 6), % Retained Strength, 70 Min.

34–2.02C Grading of Mineral Aggregate

Mineral aggregate for Class A or Class B asphalt shall be produced or furnished in the following sizes as they apply for the class of asphalt concrete to be produced: 1¼" to ¼", ⅝" to ¼", and ¼" to 0. Each size shall be maintained in separate stockpiles.

Stockpiles

Materials stockpiled for immediate use shall meet the following requirements for grading:

Size Designation 1¼" to ¼" (for Class A).

% Passing 1¼" sieve (square opening)..... 100
% Passing 1" " " " 85-100
% Passing ⅝" " " " 45- 70
% Passing ¼" " " " 0- 25

Size Designation ⅝" to ¼" (for Class B).

% Passing ⅝" sieve (square opening)..... 100
% Passing ½" " " " 75-100
% Passing ¼" " " " 0- 25

Size Designation ¼" to 0 (for classes A, B and C).

% Passing ½" sieve (square opening)..... 100
% Passing ¼" " " " 70-100
% Passing U. S. No. 10 sieve 40- 75
% Passing U. S. No. 200 sieve..... 2- 12

The Contractor shall so control the separation and stockpiling of coarse and fine material aggregate that the quantity of material passing the ¼" sieve in the coarse aggregate (1¼" to¼" and ⅝" to¼") will not vary more than 10% throughout the entire stockpile.

The material in each separate stockpile, including mineral aggregate ¼"-0 (but not including sand), shall meet the test requirements in the first paragraph of Section 34–2.02B.

The grading of the stockpiled materials shall be such that when they are recombined in appropriate proportions, along with blending sand if necessary, the completed mixture will meet all pertinent requirements of Section 34–2.03. It shall be the responsibility of the Contractor to furnish such blending sand as may be required to bring the completed mix within the above prescribed gradation limits.

34–2.02D Mineral Filler

Mineral filler shall be portland cement or commercially ground stone dust, and shall be approved by the Engineer. It shall be free of lumps and extraneous material and shall meet the following requirements:

Passing U. S. No. 10 sieve.....100%
Passing U. S. No. 200 sieve, not less than..... 75%
Particles smaller than 0.25 mm., not less than.... 50%
Particles smaller than .005 mm., not mare than.. 35%
Plasticity index, ASTM Designation D 424, not more than 2
Specific gravity, not less than..... 2.50

The determination of percentage of particles smaller than .025 mm. and .005 mm. shall be by means of the hydrometer method, ASTM Designation D 422.

Payment for mineral filler will be made, when required by the Engineer, at the unit contract price therefore in the proposal.

34–202E Blending Sand

In the production of mineral aggregates for asphalt concrete there is often a deficiency of material passing the U. S. No. 40 sieve. When this occurs, blending sand in sufficient amount to make up the deficiency shall be provided by the Contractor.

Blending sand shall be clean, hard, sound material, either naturally occurring sand or crusher fines, and must be capable of being readily coated with asphalt cement. Although the exact grading requirements for the material will vary, depending upon the grading of the mineral aggregate with which it is to be mixed, it must meet the following general grading requirements:

Passing U. S. No. 40 sieve, not less than.....85%
Passing U. S. No. 200 sieve (wet sieving), not more than 25%
Sand equivalent, minimum.....40

Blending sand must be tested by the Engineer before it will be approved for use.

Payment for blending sand, when required by the Engineer, will be made at the unit contract price therefor in the proposal.

34–2.03 PROPORTIONS OF MATERIALS

The materials of which asphalt concrete is composed shall be of such sizes and gradings that, when proportioned and mixed together, they will produce a uniformly graded mixture which will conform to the requirements given in the table which follows.

The percentage of aggregate include mineral filler, when used, and refer to the complete dry mix. The percentages of asphalt refer to the complete asphalt concrete mixture. All percentages are by weight.

GRADING AND ASPHALT CEMENT PERCENTAGES

Percentages by Weight Passing Sieves

	Class A	Class B	Class C
1¼" Sieve (square opening).....	100	.....	.....
1" Sieve (square opening).....	90-100	.....	.....
⅝" Sieve (square opening).....	67- 86	100	.....
½" Sieve (square opening).....	60- 80	90-100	100
¼" Sieve (square opening).....	40- 62	55- 75	85-100
U. S. No. 10 Sieve.....	25- 40	32- 48	50- 75
U. S. No. 40 Sieve.....	10- 23	11- 24	20- 40
U. S. No. 80 Sieve.....	6- 14	6- 15	8- 23
U. S. No. 200 Sieve.....	2- 7	2- 8	3- 11
Mineral Filler (wearing courses only)	.....	1.0-2.0	1.0-2.0
Asphalt cement % of total mixture	3.5- 7	4.5-7.5	5- 10

Aggregate gradings within the above ranges shall be such that there will be a minimum of 3% of the total aggregate retained between any successive pair of sieves finer than the U. S. No. 10. The gradings shall be of such uniformity that the fractions of aggregate passing the ¼" and No. 10 sieves during the run of any day will conform to the following limitations:

Maximum variation in percentage of material passing ¼" sieve.....10
Maximum variation in percentage of material passing U. S. No. 10 sieve..... 8

The Engineer reserves the rights to require removal of fines passing a U. S. No. 10 screen on any crushed material containing excess of undesirable fines by dry screening and substituting an approved sand for fine aggregate.

The exact proportions of the several constituents to be used in the production of the bituminous mixture shall be determined by the Engineer within the above limits to provide a pavement having stabilometer and cohesiometer values and surface texture satisfactory to the Engineer. The proportions so fixed shall be changed only by his order.

34–2.04 STOCKPILING MINERAL AGGREGATES (Not used)

Stockpiling of mineral aggregates for future use will not be required unless provided for in th especial provisions of the proposal. Should stockpiling be required it shall be in accordance with the requirements of Section 23–3.01.

34–3 CONSTRUCTION DETAILS 55

34–3.01 PREPARATION OF BASE OR SUBGRADE.... 55

34–3.01A Preparation of Asphalt, Concrete or Brick Surfaces

Before placing asphalt concrete surfacing courses on a new or existing portland cement concrete, bituminous surfaced, or brick surfaced rigid type base for the proposed pavement, it shall be thoroughly cleaned of all objectionable substances and debris. All joint filler material which protrudes above the surface of the existing pavement shall be removed flush thereto. All types of existing pavement or bituminous surface shall be thoroughly cleaned by sweeping and flushing to remove dust and other foreign matter. Unless otherwise provided for in the special provisions the Engineer will perform any necessary flushing at no cost to the Contractor, porvided the need for flushing is not the result of the Contractor's operations, in which case the Engineer will make a charge for such work.

A tack coat of asphalt applied at the rate of .02 to .05 gallon per square yard of retained asphalt shall be applied uniformly to all surfaces on which any course of asphalt concrete is to be placed, including the first or leveling course of asphalt concrete, unless its omission is specifically directed by the Engineer.

The tack coat may be heated cutback asphalt consisting of fifty per cent (50%) pacing grade asphalt and fifty per cent (50%) gasoline thoroughly mixed, or emulsified asphalt, mixing grade. The emulsified asphalt may be mixed with water at the rate of one (1) to two (2) parts water to one (1) part emulsified asphalt as directed by the Engineer. The emulsified asphalt shall be Type SS-1 and comply with the requirements of Section 27.

When asphalt concrete pavement is to be constructed over an existing paved or oiled surface, in addition to the preparation as outlined hereinbefore, all holes and small depressions shall be filled with an appropriate class of asphalt concrete mix by hand shoveling. The surface of the patched area shall then be leveled by raking and the patch thoroughly rolled with an eight (8) ton power roller, or a two (2) axle power patching roller. All patching shall be as directed by the Engineer.

34–3.01B Preparation of Untreated Roadway

The crushed rock subgrade upon which the asphalt concrete is to be placed shall be constructed to conform with typical roadway sections shown on the construction plans and in conformance with requirements in Section 15, "Subgrade."

Where required in the special provisions, the roadway shall be primed as provided under Section 32, entitled "Bituminous Surface Treatment," except that one only application of asphalt and one application of prime coat aggregate will be required.

34–3.01C Removing Existing Pavement..... 55

34–3.02 CONNECTIONS WITH EXISTING FACILITIES

Where the bituminous pavement is to be connected with an exisiting roadway surface, bridge, railway crossing or other facility, the Contractor will be required, under direction of the Engineer, to modify the existing roadway profile in such a manner as to produce a smooth riding connection to the existing facility.

Where it is necessary to remove existing asphalt surfaces or oil mat surfaces to provide proper meet lines and riding surfaces, the Contractor shall burn or chip the existing surface so that there will be sufficient depth to provide a minimum of one (1) inch of asphalt concrete, and the waste material shall be disposed of by the Contractor. Prior to placing the asphalt concrete, these areas shall be tacked in accordance with requirements previously described in Section 34–3.01A. Meet lines shall be straight and the edges be vertical. The edges of meet line cuts shall be painted with diluted cutback asphalt or SS-1 emulsion prior to placing asphalt concrete. After placing the asphalt concrete, the meet line shall be sealed by painting with a cutback asphalt or SS-1 emulsion and immediately covered with clean dry sand.

Where it is required to remove sections of existing pavements such as portland cement concrete, cobblestone, brick or other rigid type, the removal shall be performed and paid for as described in Section 52, "Removal of Existing Street Improvements."

34–3.03 PREPARATION AND HEATING AGGREGATES 55

34–3.03A Operation of Asphalt Plant..... 56

34–3.03B Plant Capacity 56

34–3.04 HEATING ASPHALT 56

34–3.05 PROPORTIONING

The aggregates shall be proportioned in a weigh box mounted on approved multiple beam or springless dial charging scales, the different sizes of aggregate being weighed into the weigh box one at a time or simultaneosly into individual weigh hoppers, in the proportions directed by the Engineer.

If no provision is made to weigh the mineral filler in the weigh box with the other aggregates, the proportions of mineral filler and/or collector dust shall be determined on a weight basis and shall be measured separately from the other aggregates. After the exact proportions of mineral filler and collector dust have been determined for one batch, the material or materials may be added to the mixer by volume measurement. After measuring, it may be added to the aggregates either in the weigh box or in the mixer. If added in the mixer, it shall be added at the center of the mixer at the time mixing is started.

The Engineer may order the mineral filler to be added to the aggregates in the weigh box if there is any indication of improper or incomplete mixing of the filler when added directly to the mixer.

The asphalt shall be weighed on separate dial or beam scales limited in capacity to two times the weight of asphalt required for the mixer batch. The graduations on the scales shall be not more than one (1) pound. If a beam scale is used it shall be equipped with a "Tell Tale" dial with graduations of not more than one (1) pound.

The asphalt may also be proportioned by a device which sprays the asphalt into the mixer through six or more nozzles, and which weighs or proportions the material for each batch by a positive rotating meter which is calibrated in pounds. The metering device shall have an established background of service and shall be approved by the Engineer.

The number of pounds of each size or grade of aggregates, pounds of mineral filler, and pounds of asphalt to be used in each mixer batch shall be as the Engineer directs. The quantities directed by the Engineer shall be such, however, that the proportions of the different materials will be within the limits hereinbefore specified.

The scales used for weighing aggregates, filler and asphalt shall conform to the requirements of Section 21, "Weighing Equipment." The use of springs to carry part or all of the load in the weighing mechanism for the measuring of aggregate, filler and asphalt will not be permitted. The main weigh box shall be equipped with a discharge gate so that, as the aggregates are discharged into the mixer, the different sizes of aggregates will be blended together uniformly.

Volumetric proportioning shall not be used unless so provided in the special provisions of the contract proposal.

34–3.06 MIXING 56

34–3.07 HAULING 56

34–3.08 SPREADING AND FINISHING..... 57

34–3.09 COMPACTING 57

34–3.10 PRELEVELING FOR ASPHALT CONCRETE SURFACING..... 58

34–3.11 CONSTRUCTION OF COURSES..... 58

34–3.12 JOINTS 58

34–3.13 ADJUSTMENT OF EXISTING CASTINGS TO FINISH GRADE

This work shall consist of the adjustment of all castings, such as manhole frame and covers, catch basin frame and covers, frames and covers for various types of gate valves, etc., to conform with the exact finished grade of new asphalt concrete pavement. The adjustment of

these facilities shall be so scheduled as to minimize the interference with traffic. The work involved in these adjustments and method of compensation shall be in accordance with requirements contained in Section 53 entitled "Adjustment of New and Existing Utility Structures to Finish Grade."

After such castings have been set to final grade, they shall not be disturbed by the rolling operations. Each course or lift shall be compacted thoroughly around the perimeter of the casting by rolling with a sufficient number of criss-cross passes around the casting with the wheel just touching the casting but not shaving or rolling over the casting. On the final finish course, compaction shall be completed to grade before roller is permitted to pass over the top of the casting.

34–3.14 SURFACE SMOOTHNESS 58

34–3.15 HEATER-PLANING BITUMINOUS PAVEMENT 58

34–3.15A General

Where shown on the plans or where directed by the Engineer, the existing bituminous pavement shall be planed in accordance with the specifications that follow.

This item shall consist of planing or shaving the surface irregularities from the exisiting bituminous pavement to produce a smooth surface by means of equipment hereinafter specified. The finished surface shall be free from gouges, grooves, ridges and other imperfections of workmanship to restore the surface to the required surface smoothness.

The temperature at which the work is performed, the nature and condition of the equipment and the manner of performing the work shall be such that the pavement will not be torn, broke, burned or otherwise injured by the planing operation.

All cuttings or other debris resulting from the heater-planing operations shall be disposed of by the Contractor. All cost therefor resulting to the Contractor shall be included in his unit bid contract price for "Heater-Planing Bituminous Pavement."

34–3.15B Equipment 58

34–3.16 MISCELLANEOUS DETAILS OF CONSTRUCTION 59

34–3.17 SAMPLES 59

34–3.18 FINISHING AND CLEANUP

Finishing and cleanup, when a bid item therefor is included in the proposal, shall be performed as specified in Sections 4.08 and 57.

34–3.19 UNFAVORABLE WEATHER 59

34–3.20 MAINTENANCE OF TRAFFIC AND TRAFFIC SIGNS 59

34–3.21 ORGANIZATION AND EQUIPMENT 59

34–4 MEASUREMENT AND PAYMENT

Payment for construction of "Asphalt Concrete Pavement" will be made for such of the following bid items as appear on the contract bid proposal:

1. "Preparation of Untreated Roadway," per square yard, or per lump sum.
2. "Asphalt (grade) Prime Coat," per ton.
3. "Prime Coat Aggregate," per cubic yard, or per ton.
4. "Asphalt for Tack Coat," per ton.
5. "Asphalt Concrete Pavement Class A," per ton.
6. "Asphalt Concrete Pavement Class B," per ton.
7. "Asphalt Concrete Pavement Class C," per ton.
8. "Blending Sand," per cubic yard.
9. "Mineral Filler," per ton.
10. "Hydrant Water," "Hauled Water," per linear foot, or per M gallon.
11. "Finishing and Cleanup," per lump sum, or per station (100′).
12. "Remove Existing Pavement (class)," per square yard.
13. "Chipping Existing Asphalt Surface," per square yard.
14. "Heater-Planing Bituminous Pavement," per hour.

34–4.01 PREPARATION OF UNTREATED ROADWAY 59

34–4.02 ASPHALT—PRIME COAT 59

34–4.03 PRIME COAT AGGREGATE 59

34–4.04 ASPHALT FOR TACK COAT 59

34–4.05 ASPHALT CONCRETE PAVEMENT 59

34–4.06 MINERAL AGGREGATES IN STOCKPILE (Not used)

Refer to Section 34–2.04.

34–4.07 BLENDING SAND 60

34–4.08 FURNISHING MINERAL FILLER 60

34–4.09 WATER

Water will be measured and paid for as provided in Section 16.

34–4.10 FINISHING AND CLEANUP

Finishing and cleanup, when included in the proposal, will be paid for on the basis shown. The unit contract price, as shown in the proposal, shall be full compensation for all costs incurred by the Contractor in performing the finishing and cleanup in accordance with the plans and specifications, and directions of the Engineer.

34–4.11 REMOVING EXISTING PAVEMENT

The unit contract price for "Remove Existing Pavement (class)," as shown on the plans and specified in the proposal, shall be full compensation for removing the pavement and disposing of it as specified in Section 52, "Removal of Existing Street Improvements."

34–4.12 HEATER-PLANING BITUMINOUS PAVEMENT 60

34–4.13 CHIPPING EXISTING ASPHALT SURFACE 60

34–4.14 INCIDENTAL WORK 60

Section 35—Extruded Asphalt Concrete Curb

35–1 DESCRIPTION

Extruded asphalt curb shall be constructed at such locations as shown on the plans and to the cross section shown on Standard Plan No. 122.

35–2 MATERIALS 60

35–3 CONSTRUCTION DETAILS 60

35–3.01 EQUIPMENT FOR LAYING CURB 60

35–3.02 MIXING AND PLACING 60

35–3.03 JOINTS 60

35–.304 CURING 60

35–3.05 FURTHER PROVISIONS 61

35–4 MEASUREMENT AND PAYMENT

The extruded asphalt concrete curb will be measured by the linear foot along the front face of the curb and returns.

Payment will be made for the following bid item when included and shown in any particular contract:

1. "Type 122 Extruded Asphalt Concrete Curb," per linear foot.

The unit contract price for the above item shall be full compensation for all costs of labor, tools, equipment and materials and for complete installation in accordance with plans and specifications.

Section 36—Beam Guard Rail (New Section)

36–1 DESCRIPTION (New Section)

Beam guard rail complying with the requirements of these specifications shall be constructed in accordance with Standard Plan No. 201 and where indicated on the plans, or where directed by the Engineer.

Beam guard rail shall consist of a steel plate mounted on one or both sides of reinforced concrete or wood posts. Terminal sections of rail, as detailed on the plans, shall be installed at both ends of a complete guard rail section unless their omission is authorized by the Engineer.

36–2 MATERIALS (New Section)

36–2.01 RAIL ELEMENT (New Section)

The rail element and terminal sections shall consist of 12-gauge steel formed into a beam not less than 12 inches wide and 3 inches deep. The rail element and terminal sections shall be formed from open hearth or electric furnace steel. The physical properties of the steel shall conform to the following minimum requirements:

	Rail Element	*Terminal Sections*
Ultimate tensile strength	70,000 p.s.i.	
Yield point strength	50,000 p.s.i.	25,000 p.s.i.
Elongation in two inches	12 per cent	

The rail splices shall have a minimum total ultimate strength of 80,000 pounds at each joint.

The holes in the plate shall be slotted to facilitate erection and to permit expansion and contraction. The edges of the rail shall be rolled or rounded so they will present no sharp edges. Where the rail is on a curve, the plates at the splice shall make contact throughout the area of the splice. When the radius of curvature is less than 150 feet the rail shall be shaped in the shop.

36–2.01A Inspection (New Section)

The Contractor shall give ample notice to the Engineer before the rail elements are fabricated in order that inspection may be provided. The Contractor shall arrange for all facilities necessary for the inspection of material and workmanship at the point of fabrication of the rail element, and inspectors shall be allowed free access to the necessary parts of the premises.

The inspector shall have the authority to reject materials or workmanship which do not fulfill the requirements of these specifications. In cases of dispute the Contractor may appeal to the Engineer, whose decision shall be final.

The inspector may accept a mill test report certifying that the steel used in fabricating the rail elements meets the requirements of the specifications. Th City reserves the right, however, to require the Contractor to furnish samples of the steel proposed for use and to determine to its satisfaction that the steel meets the specification requirements.

It is the intent of these specifications that the inspection will be performed at the point of fabrication. Plant inspection is intended as a means of facilitating the work and avoiding error. It is expressly understood that inspection at the fabricating plant will not relieve the Contractor from responsibility for material and workmanship meeting the specifications, nor from his obligation to replace material found to be defective in any particular after delivery to the site of the work.

36–2.02 POSTS (New Section)

Posts for beam guard rail, unless concrete posts are specified in the special provisions, may be creosote treated or pentachlorophenol treated wood posts or reinforced concrete posts, whichever kind the Contractor may elect to use, provided however, that only one type of post shall be used on any one project. Posts shall be of the dimensions shown on the plans and shall meet the requirements of these specifications.

36–2.02A Treated Timber Posts (New Section)

Timber posts shall be square, eight (8) inches by eight (8) inches S4S and shall conform to the grade specified in Section 86–2.01. The posts shall be shaped as shown on the plans before being treated.

Timber posts shall be pressure treated by the empty cell process to provide a minimum retention of eight (8) pounds of creosote oil or 0.4 pounds of pentachlorophenol per cubic foot of timber in accordance with Section 90–3.02.

36–2.02B Precast Reinforced Concrete Posts (New Section)

Precast concrete posts shall be round, reinforced concrete posts 8-inch minimum to 9-inch maximum diameter. The post may be tapered from 9-inch diameter at the bottom to 8-inch diameter at the top to allow for vertical stripping of the forms. If a tapered post is furnished, the larger end will be at the bottom of the post.

Portland cement and water shall comply with the requirements of the standard specifications for the materials. Aggregates shall meet all requirements of specifications except for grading. The maximum size of aggregate shall be appropriate for the dimension of the post and the combined aggregate shall be well graded from coarse to fine.

The materials used in the concrete shall develop on test not less than 3,500 pounds per square inch compressive strength at the age of 28 days.

Reinforcement shall consist of either one of the following:

(a) Wire meeting the requirement of ASTM Designation A 82, Cold Drawn Steel Wire for Concrete Reinforcement,

(b) Intermediate grade steel bars, deformed type, meeting the requirements of ASTM Designation A 15, Billet-Steel Bars for Concrete Reinforcement, and ASTM Designation A 305, Minimum Requirements for the Deformation of Deformed Steel Bars for Concrete Reinforcement.

The metal reinforcement in Type A posts shall be spaced and arranged to provide not less than 60 per cent nor more than 70 per cent of the total cross sectional area of the reinforcement in the one-half of the post which will face the roadway when installed. Except at the bottom of the post, metal reinforcing shall be placed no closer than one inch from the outer surface of the post. When deformed bars are used for reinforcement there shall be not less than two bars on the roadway face of the post. The reinforcement shall be supported in such a manner that the minimum cover of concrete will be secured.

Each Type A post shall be marked by suitable means to identify the center of the heavier reinforced (roadway) face of the post. Centered and tapered bolt holes will be acceptable identification. Tapered holes shall taper from seven-eighths (⅞) inch to one and one-eighth (1⅛) inch in diameter and shall have the larger opening on the roadway face of the post.

Metal reinforcement in Type B posts shall be spaced to provide equal cross-sectional area of reinforcement in each roadway face of the post. When deformed bars are used there shall be not less than two bars in each roadway face.

Type B posts shall be plainly marked with the letter B on top of each post.

36–2.02B1 Finish (New Section)

Precast reinforced concrete posts will not be painted. The concrete may be placed in the form and compacted in any manner desired by the manufacturer (tamped, vibrated(spun, etc.) provided the finished post is true in form and shape, is free of fractures, cracks, honeycomb and other serious defects, and meets the requirements for strength. The presence of web after stripping the fresh concrete, or of surface holes up to ½-inch in diameter and 3/16-inch in depth, will not be considered defects

sufficient for rejection. It is the intent of these specifications to provide a post manufactured in a careful and workmanlike manner with a surface that is reasonably dense and uniform in color, but without the more refined surface finish usually required when the product is to be painted.

36–2.02B2 Strength Requirements (New Section)

When subjected to testing as a simple beam of 24-inch span and center loading applied to either roadway face of the post, the reinforced post, when 28 days old, shall withstand a total load of not less than 30,000 pounds at failure.

36–2.02B3 Testing (New Section)

The Contractor shall be obligated to furnish the Engineer wtihout charge for testing purposes, upon request, a minimum of two representative reinforced concrete posts for any one contract or a maximum of one (1) per cent of the number of posts specified for any one contract, whichever option the Engineer may determine to be necessary.

36–2.03 GALVANIZING (New Section)

All rail elements shall be galvanized in accordance with ASTM Designation A 93, Coating Class 2.5. Bolts, nuts and washers shall be galvanized in accordance with the requirements of ASTM Designation A 153, Zinc Coating on Hardware, Iron and Steel.

36–2.04 HARDWARE (New Section)

Bolts shall be made from commercial bolt stock having a tensile strength of not less than 50,000 pounds per square inch. Washers shall be malleable iron, or shall be cut from medium steel or wrought iron plate.

36–3 CONSTRUCTION DETAILS (New Section)

36–3.01 ERECTION OF POSTS (New Section)

The posts shall be set to the true line and grade of the highway and spaced as shown on the plans. When the plans require that the ends of a section of guard rail be splayed out, the posts shall be set to accommodate the splaying.

The post holes shall be of sufficient dimensions to allow placement and thorough compaction of selected backfill material completely around the post.

In general, all post holes shall be dug or drilled. Ramming or driving will be permitted only if approved by the Engineer and if no damage to the shoulders and adjacent slopes results therefrom.

36–3.02 PAINTING (New Section)

Before applying any paint to the beam rail, the surface shall be thoroughly clean and dry and all loose paint or scale shall be removed. No exterior painting shall be done in wet or freezing weather.

Galvanized guard rail shall be painted on the roadway face only.

Painting shall be done in accordance with the applicable sections of Section 91 of these specifications.

Guard rail posts shall not be painted.

36–3.03 ERECTION OF RAIL (New Section)

All metal work shall be fabricated in the shop. No punching, cutting or welding shall be done in the field, except that holes for special details in exceptional cases may be drilled in the field, when approved by the Engineer. The rail shall be erected so that the bolts at expansion joints will be located at the centers of the slotted holes.

Rail plates shall be fastened to the posts with galvanized bolts, washers, and nuts of the size and kind shown on the plans.

All bolts, except where otherwise required at expansion joints, shall be drawn tight. Bolts through expansion joints shall be drawn up as tight as possible without being tight enough to prevent the rail elements from sliding past one another longitudinally. Bolts shall be sufficiently long to extend at least one-fourth (¼) inch beyond the nuts. Except where required for adjustments, bolts shall not extend more than one-half (½) inch beyond the nuts. Bolts through posts of variable thickness shall be cut off one-fourth (¼) inch beyond the nuts, and burred.

36–3.04 PLANS (New Section)

The Contractor shall submit for approval of the Engineer such additional detailed plans and shop drawings of rail punchings, fittings and assemblies as may be required by the Enginerr. The Contractor shall cooperate with the Engineer in working out any detail in connection with the guard rail required to complete the work satisfactorily.

36–4 MEASUREMENT (New Section)

Measurement of beam guard rail shall be by the linear foot measured along the line of the completed guard rail from end to end of terminal sections, or from end to end of rail sections if terminal sections are not installed.

36–5 PAYMENT (New Section)

The unit contract prices per linear foot for "Single Beam Guard Rail," "Double Beam Guard Rail," of Temporary Beam Guard Rail" shall be full compensation for furnishing all labor, tools, material and equipment, and for all other costs and expenses necessary to complete the work as specified.

(Section No. 37 reserved for possible future use.)

Section 38—Cement Concrete Stairways and Landings (New Section)

38–1 DESCRIPTION (New Section)

Cement concrete stairways and landings unless otherwise shown on the project plans shall be constructed in accordance with Standard Plan No. 115 and these specifications.

38–2 MATERIALS (New Section)

Portland cement concrete, reinforcing steel, forms and curing materials shall conform to the requirements therefor in Section 39–2 and Section 39–3.

The concrete mix shall be Class 6 (¾), unless otherwise specified in the special provisions or directed by the Engineer.

Galvanized iron pipe railing shall be fabricated from standard weight galvanized steel pipe conforming to ASTM Specification A 120.

38–3 CONSTRUCTION DETAILS (New Section)

38–3.01 SITE PREPARATION AND GRADING (New Section)

The area staked by the Engineer, within which cement concrete stairways and landings are to be constructed, shall be cleared and grubbed and graded in accordance with the applicable requirements therefor in Section 12 and Section 13, respectively. Excavation for grading to construct cement concrete stairways and landings shall be considered "Unclassified Excavation," as described in Section 13–1.01, unless otherwise provided in the special provisions; and any compaction of excavation required for the grading work will be paid for as provided hereinafter for the type of equipment employed.

38–3.02 SUBGRADE PREPARATION AND FORMS (New Section)

Subgrade preparation and its compaction as required for preparing a proper subgrade for cement concrete stairways and landings, acceptable to the Engineer, shall conform to the applicable requirements for preparing the subgrade as specified in Section 15 for pavements.

Forms shall be of any suitable material provided, however, that the material used for forms will construct a finished cement concrete stairway or stairway landing of

dense concrete, conforming to the alignment, grade, and cross section dimensions required by the construction plans.

38–3.03 REINFORCING STEEL (New Section)

Reinforcing steel for cement concrete stairways shall be placed as shown on the standard plan. The steel shall be assembled and securely tied with annealed wire of not less than No. 16 gauge at each bar lap or crossing and rigidly supported in the plan location during the concrete placement operations.

38–3.04 RAILINGS (New Section)

Hand railings for cement concrete stairways, when required, shall be of welded galvanized steel pipe construction, as shown on the plans. Welds shall be made by experienced welders and each weld shall be ground and buffed to a smooth surface which shall then be painted with a coat of "Galvoweld," or approved equivalent coating. Completed railings, after installation is completed, shall be painted with one (1) coat of metal primer and one (1) coat of aluminum paint, as specified in Section 91–2.02T.

The railing shall be placed either completely assembled at the time when stairway concrete is placed, or recesses shall be provided in the concrete for grouting in the railing posts for the railing installation, after the concrete has been placed, finished and cured. The railing installation, when completed, will be in true alignment, on proper grade, with all posts plumb.

38–3.05 PLACING CONCRETE, FINISHING AND CURING (New Section)

Concrete for stairways and landings shall be Class 6 (¾) A unless otherwise provided in the special provisions or ordered by the Engineer. Consolidation of the concrete, finishing and curing shall conform to the applicable requirements therefor in Section 39–3 inclusive, as they would apply to cement concrete stairway construction.

Front and side edging of stair treads shall be to a radius of one-half (½) inch.

Landings for stairways shall be marked as specified for concrete sidewalks in Section 42, except that transverse and longitudinal markings shall be modified as necessary to result in uniform size of squares in each landing. Where gutters are along the side of the stairways, the gutter portion of stairway landing shall be smooth finished without markings, to conform with the stairway gutter.

38–4 MEASUREMENT (New Section)

Measurement of "Unclassified Excavation," when required for grading for cement concrete stairways and landings will be made on the basis of volume, as specified in Section 13–4.

Measurement of cement concrete stairways shall be by the linear foot across the tread of each tread.

Measurement of stairway railing shall be on the slope and along the length of the top rail.

Measurement of concrete landings shall be by the square yard measured from the bottom of the riser at one end to the top of the riser at the other end, less

Measurement for compaction equipment to compact embankment or subgrades for cement concrete stairways and landings will be made to the nearest one-half (½) hour of actual time consumed in compacting as directed for the type of equipment used. No allowances will be made for time consumed in making repairs to equipment, for moving equipment to or from areas on the work where compaction is required, or for when the towing equipment is performing other work.

38–5 PAYMENT (New Section)

Payment will be made for such of the following bid items as are included in any particular contract:

(1) "Unclassified Excavation," per cubic yard.
(2) "Cement Concrete Stairway," per linear foot.
(3) "Cement Concrete Stairway Landing," per square yard.
(4) "Stairway Steel Pipe Railing," per linear foot.
(5) "Mechanical Tamper," per hour.

38–5.01 EXCAVATION FOR GRADING (New Section)

The unit contract price per cubic yard for "Unclassified Excavation," shall be full compensation for excavating, loading, placing or disposing of the material as may be required for the work, including the removal and disposal of debris from clearing and grubbing operations including top soil, organic matter and other deleterious matter from surface of a cut or fill, as may be necessary for the work.

38–5.02 CEMENT CONCRETE STAIRWAY (New Section)

The unit contract price for "Cement Concrete Stairway," shall be full compensation for all clearing and grubbing, subgrade preparation, constructing forms, furnishing and placing reinforcing steel, furnishing and placing concrete Class 6 (¾) A, its consolidation, finishing and curing in accordance with these specifications.

38–5.03 CEMENT CONCRETE STAIRWAY LANDINGS (New Section)

The unit contract price for "Cement Concrete Stairway Landings," shall be full compensation for all clearing and grubbing, subgrade preparation, furnishing and installing forms, reinforcing steel; furnishing and placing concrete, consolidation, finishing, marking and curing as required by these specifications.

38–5.04 STAIRWAY STEEL PIPE RAILING (New Section)

The unit contract price per linear foot for "Stairway Steel Pipe Railing," shall be full compensation for all costs to furnish all materials, labor and equipment to construct and complete the railing in accordance with these specifications.

38–5.05 COMPACTION EQUIPMENT (New Section)

The unit contract price per hour for "Compaction Equipment (type specified)," shall be full compensation for the time compacting equipment, as named for type, is actually compacting embankments or subgrades for cement concrete stairways and landings to the density required by the Engineer.

38–5.06 INCIDENTAL WORK (New Section)

For any work described in this section for which no bid item is provided therefor in the proposal, the work required shall be considered incidental to the construction and all cost therefor shall be included by the Contractor in other unit pay items of the contract.

Section 39—Cement Concrete Pavement

39–1 DESCRIPTION

The work covered by this section of the specification pertains to the construction of portland cement concrete pavements in streets, alleys or other public rights of way.

Such pavements shall be constructed in accordance with the details shown on the construction plans and a specified surface smoothness tolerance for the type of roadway paved. The construction methods used by the Contractor, required end result for surface smoothness, are further described in Section 39–3.15 of this section of specifications.

39–2 MATERIALS 61
39–2.01 CEMENT 61
39–2.01A General Requirements 61
39–2.01B Storage on the Work 61
39–2.01C Sampling and Acceptance 61

39–2.01D Portland Cement

Portland cement shall conform to the requirements for Type I cement of ASTM Designation C 150, except that the content of alkalies shall not exceed seventy-five hundredths (0.75) per cent by weight calculated as

dense concrete, conforming to the alignment, grade, and cross section dimensions required by the construction plans.

38–3.03 REINFORCING STEEL (New Section)

Reinforcing steel for cement concrete stairways shall be placed as shown on the standard plan. The steel shall be assembled and securely tied with annealed wire of not less than No. 16 gauge at each bar lap or crossing and rigidly supported in the plan location during the concrete placement operations.

38–3.04 RAILINGS (New Section)

Hand railings for cement concrete stairways, when required, shall be of welded galvanized steel pipe construction, as shown on the plans. Welds shall be made by experienced welders and each weld shall be ground and buffed to a smooth surface which shall then be painted with a coat of "Galvoweld," or approved equivalent coating. Completed railings, after installation is completed, shall be painted with one (1) coat of metal primer and one (1) coat of aluminum paint, as specified in Section 116–2.02T.

The railing shall be placed either completely assembled at the time when stairway concrete is placed, or recesses shall be provided in the concrete for grouting in the railing posts for the railing installation, after the concrete has been placed, finished and cured. The railing installation, when completed, will be in true alignment, on proper grade, with all posts plumb.

38–3.05 PLACING CONCRETE, FINISHING AND CURING (New Section)

Concrete for stairways and landings shall be Class 6 (¾) A unless otherwise provided in the special provisions or ordered by the Engineer. Consolidation of the concrete, finishing and curing shall conform to the applicable requirements therefor in Section 39–3 inclusive, as they would apply to cement concrete stairway construction.

Front and side edging of stair treads shall be to a radius of one-half (½) inch.

Landings for stairways shall be marked as specified for concrete sidewalks in Section 42, except that transverse and longitudinal markings shall be modified as necessary to result in uniform size of squares in each landing. Where gutters are along the side of the stairways, the gutter portion of stairway landing shall be smooth finished without markings, to conform with the stairway gutter.

38–4 MEASUREMENT (New Section)

Measurement of "Unclassified Excavation," when required for grading for cement concrete stairways and landings will be made on the basis of volume, as specified in Section 13–4.

Measurement of cement concrete stairways shall be by the linear foot for the horizontal distance from face of lower riser to face of upper riser, plus one (1) foot.

Measurement of stairway railing shall be on the slope and along the length of the top rail.

Measurement of concrete landings shall be by the square yard measured from the bottom of the riser at one end to the top of the riser at the other end, less one (1) foot.

Measurement for compaction equipment to compact embankment or subgrades for cement concrete stairways and landings will be made to the nearest one-half (½) hour of actual time consumed in compacting as directed for the type of equipment used. No allowances will be made for time consumed in making repairs to equipment, for moving equipment to or from areas on the work where compaction is required, or for when the towing equipment is performing other work.

38–5 PAYMENT (New Section)

Payment will be made for such of the following bid items as are included in any particular contract:

(1) "Unclassified Excavation," per cubic yard.
(2) "Cement Concrete Stairway," per linear foot.
(3) "Cement Concrete Stairway Landing," per square yard.
(4) "Stairway Steel Pipe Railing," per linear foot.
(5) "Mechanical Tamper," per hour.

38–5.01 EXCAVATION FOR GRADING (New Section)

The unit contract price per cubic yard for "Unclassified Excavation," shall be full compensation for excavating, loading, placing or disposing of the material as may be required for the work, including the removal and disposal of debris from clearing and grubbing operations including top soil, organic matter and other deleterious matter from surface of a cut or fill, as may be necessary for the work.

38–5.02 CEMENT CONCRETE STAIRWAY (New Section)

The unit contract price for "Cement Concrete Stairway," shall be full compensation for all clearing and grubbing, subgrade preparation, constructing forms, furnishing and placing reinforcing steel, furnishing and placing concrete Class 6 (¾) A, its consolidation, finishing and curing in accordance with these specifications.

38–5.03 CEMENT CONCRETE STAIRWAY LANDINGS (New Section)

The unit contract price for "Cement Concrete Stairway Landings," shall be full compensation for all clearing and grubbing, subgrade preparation, furnishing and installing forms, reinforcing steel; furnishing and placing concrete, consolidation, finishing, marking and curing as required by these specifications.

38–5.04 STAIRWAY STEEL PIPE RAILING (New Section)

The unit contract price per linear foot for "Stairway Steel Pipe Railing," shall be full compensation for all costs to furnish all materials, labor and equipment to construct and complete the railing in accordance with these specifications.

38–5.05 COMPACTION EQUIPMENT (New Section)

The unit contract price per hour for "Compaction Equipment (type specified)," shall be full compensation for the time compacting equipment, as named for type, is actually compacting embankments or subgrades for cement concrete stairways and landings to the density required by the Engineer.

38–5.06 INCIDENTAL WORK (New Section)

For any work described in this section for which no bid item is provided therefor in the proposal, the work required shall be considered incidental to the construction and all cost therefor shall be included by the Contractor in other unit pay items of the contract.

Section 39—Cement Concrete Pavement

39–1 DESCRIPTION

The work covered by this section of the specification pertains to the construction of portland cement concrete pavements in streets, alleys or other public rights of way.

Such pavements shall be constructed in accordance with the details shown on the construction plans and a specified surface smoothness tolerance for the type of roadway paved. The construction methods used by the Contractor to obtain the required end result for surface smoothness are further described in Section 39–3.15.

39–2 MATERIALS 61
39–2.01 CEMENT 61
39–2.01A General Requirements 61
39–2.01B Storage on the Work 61
39–2.01C Sampling and Acceptance 61

39–2.01D Portland Cement

Portland cement shall conform to the requirements for Type I cement of ASTM Designation C 150, except that the content of alkalies shall not exceed seventy-five hundredths (0.75) per cent by weight calculated as

Section 38—*Cement Concrete Stairways and Landings* (New Section) Page 29

dense concrete, conforming to the alignment, grade, and cross section dimensions required by the construction plans.

38–3.03 REINFORCING STEEL (New Section)

Reinforcing steel for cement concrete stairways shall be placed as shown on the standard plan. The steel shall be assembled and securely tied with annealed wire of not less than No. 16 gauge at each bar lap or crossing and rigidly supported in the plan location during the concrete placement operations.

38–3.04 RAILINGS (New Section)

Hand railings for cement concrete stairways, when required, shall be of welded galvanized steel pipe construction, as shown on the plans. Welds shall be made by experienced welders and each weld shall be ground and buffed to a smooth surface which shall then be painted with a coat of "Galvoweld," or approved equivalent coating. Completed railings, after installation is completed, shall be painted with one (1) coat of metal primer and one (1) coat of aluminum paint, as specified in Section 91–2.02T.

The railing shall be placed either completely assembled at the time when stairway concrete is placed, or recesses shall be provided in the concrete for grouting in the railing posts for the railing installation, after the concrete has been placed, finished and cured. The railing installation, when completed, will be in true alignment, on proper grade, with all posts plumb.

38–3.05 PLACING CONCRETE, FINISHING AND CURING (New Section)

Concrete for stairways and landings shall be Class 6 (¾) A unless otherwise provided in the special provisions or ordered by the Engineer. Consolidation of the concrete, finishing and curing shall conform to the applicable requirements therefor in Section 39–3 inclusive, as they would apply to cement concrete stairway construction.

Front and side edging of stair treads shall be to a radius of one-half (½) inch.

Landings for stairways shall be marked as specified for concrete sidewalks in Section 42, except that transverse and longitudinal markings shall be modified as necessary to result in uniform size of squares in each landing. Where gutters are along the side of the stairways, the gutter portion of stairway landing shall be smooth finished without markings, to conform with the stairway gutter.

38–4 MEASUREMENT (New Section)

Measurement of "Unclassified Excavation," when required for grading for cement concrete stairways and landings will be made on the basis of volume, as specified in Section 13–4.

Measurement of cement concrete stairways shall be by the linear foot across the tread of each tread.

Measurement of stairway railing shall be on the slope and along the length of the top rail.

Measurement of concrete landings shall be by the square yard measured from the bottom of the riser at one end to the top of the riser at the other end, less

Measurement for compaction equipment to compact embankment or subgrades for cement concrete stairways and landings will be made to the nearest one-half (½) hour of actual time consumed in compacting as directed for the type of equipment used. No allowances will be made for time consumed in making repairs to equipment, for moving equipment to or from areas on the work where compaction is required, or for when the towing equipment is performing other work.

38–5 PAYMENT (New Section)

Payment will be made for such of the following bid items as are included in any particular contract:

(1) "Unclassified Excavation," per cubic yard.
(2) "Cement Concrete Stairway," per linear foot.
(3) "Cement Concrete Stairway Landing," per square yard.
(4) "Stairway Steel Pipe Railing," per linear foot.
(5) "Mechanical Tamper," per hour.

38–5.01 EXCAVATION FOR GRADING (New Section)

The unit contract price per cubic yard for "Unclassified Excavation," shall be full compensation for excavating, loading, placing or disposing of the material as may be required for the work, including the removal and disposal of debris from clearing and grubbing operations including top soil, organic matter and other deleterious matter from surface of a cut or fill, as may be necessary for the work.

38–5.02 CEMENT CONCRETE STAIRWAY (New Section)

The unit contract price for "Cement Concrete Stairway," shall be full compensation for all clearing and grubbing, subgrade preparation, constructing forms, furnishing and placing reinforcing steel, furnishing and placing concrete Class 6 (¾) A, its consolidation, finishing and curing in accordance with these specifications.

38–5.03 CEMENT CONCRETE STAIRWAY LANDINGS (New Section)

The unit contract price for "Cement Concrete Stairway Landings," shall be full compensation for all clearing and grubbing, subgrade preparation, furnishing and installing forms, reinforcing steel; furnishing and placing concrete, consolidation, finishing, marking and curing as required by these specifications.

38–5.04 STAIRWAY STEEL PIPE RAILING (New Section)

The unit contract price per linear foot for "Stairway Steel Pipe Railing," shall be full compensation for all costs to furnish all materials, labor and equipment to construct and complete the railing in accordance with these specifications.

38–5.05 COMPACTION EQUIPMENT (New Section)

The unit contract price per hour for "Compaction Equipment (type specified)," shall be full compensation for the time compacting equipment, as named for type, is actually compacting embankments or subgrades for cement concrete stairways and landings to the density required by the Engineer.

38–5.06 INCIDENTAL WORK (New Section)

For any work described in this section for which no bid item is provided therefor in the proposal, the work required shall be considered incidental to the construction and all cost therefor shall be included by the Contractor in other unit pay items of the contract.

Section 39—Cement Concrete Pavement

39–1 DESCRIPTION

The work covered by this section of the specification pertains to the construction of portland cement concrete pavements in streets, alleys or other public rights of way.

Such pavements shall be constructed in accordance with the details shown on the construction plans and a specified surface smoothness tolerance for the type of roadway paved. The construction methods used by the Contractor, required end result for surface smoothness, are further described in Section 39–3.15 of this section of specifications.

39–2 MATERIALS 61
39–2.01 CEMENT 61
39–2.01A General Requirements 61
39–2.01B Storage on the Work 61
39–2.01C Sampling and Acceptance 61

39–2.01D Portland Cement

Portland cement shall conform to the requirements for Type I cement of ASTM Designation C 150, except that the content of alkalies shall not exceed seventy-five hundredths (0.75) per cent by weight calculated as

Na_2O, plus $0.658K_2O$. Alkalies shall be determined in accordance with ASTM Designation C 114. It shall meet the requirements of the above specifications both for tensile strength and compressive strength and for time of setting by both the Gillmore and Vicat methods.

39–2.01E Air-Entraining Portland Cement

Air-entraining portland cement shall meet the requirements for Type 1A cement of ASTM Designation C 150, except that the content of alkalies shall not exceed seventy-five hundredths (0.75) per cent by weight, calculated as Na_2O plus $0.658K_2O$. Alkalies shall be determined in accordance with ASTM Designation C 114. It shall meet the requirements of the above specifications for time of setting by both the Gillmore and Vicat methods.

39–2.01F High-early-strength Cement

High-early-strength cement shall conform to the requirements of Type III of ASTM Designation C 150, except that the content of alkalies shall not exceed seventy-five hundredths (0.75) per cent by weight calculated as Na_2O, plus $0.658K_2O$. Alkalies shall be determined in accordance with ASTM Designation C 114. It shall meet the requirements of the above specifications both for tensile strength and compressive strength and for time of setting by both the Gillmore and Vicat methods. In addition to the above requirements, the compressive strength of 6-inch by 12-inch concrete cylinders prepared and tested as described below shall not be less than four thousand (4,000) pounds per square inch when tested at the age of 72 hours.

The compressive strength shall be the average value obtained from tests of not less than four (4) cylinders, each of which has been proportioned and mixed individually on a different day. Compressive strength shall be determined in accordance with ASTM Designation C 39. There shall be no kneading of the concrete with the hands during the mixing.

Each cylinder shall be made from a batch of concrete containing the following weights of materials:

High-early-Strength Cement ..... 5.00 lbs.
Washed sand from Steilacoom, Washington..10.00 lbs.
Washed gravel from Steilacoom, Washington .....16.00 lbs.
Clean water, in quantity to give a slump of 2 inches ±½ inch.

The aggregates used in the above test shall conform to the requirements for concrete aggregates of these specifications and they shall b graded as follows:

SAND

Passing U. S. No. 4 sieve	100%
Passing U. S. No. 8 sieve	76%
Passing U. S. No. 16 sieve	55%
Passing U. S. No. 30 sieve	35%
Passing U. S. No. 50 sieve	9%
Passing U. S. No. 100 sieve	1%

A variation of two (2) in the percentage passing any sieve will be permitted but the sum of percentages passing all sieves shall not be more than 280 nor less than 270.

GRAVEL

Passing 1¼" square opening	100%
Passing 1" square opening	75%
Passing ¾" square opening	50%
Passing ⅜" square opening	12%
Passing U. S. No. 4 sieve	0%

39–2.01G Low-Alakali Cement 61

39–2.02 CONCRETE AGGREGATES

39–2.02A General Requirements 62

39–2.02B Fine Aggregate 62

39–2.02B1 Deleterious Substances 62

39–2.02B2 Grading

Fine aggregate for concrete pavement shall be regularly graded from coarse to fine in two (2) sizes and when tested by means of U.S. Standard sieves shall conform to the following requirements expressed as percentages by weight:

	Grading No. 1		*Grading No. 2*	
	Max.	*Min.*	*Max.*	*Min.*
% passing No. 4	100	95	.....	100
% passing No. 6	98	82	100	93
% passing No. 8	86	68	95	85
% passing No. 16	65	47	80	63
% passing No. 30	42	27	60	40
% passing No. 50	20	12	30	15
% passing No. 100	7	2	8	2
% passing No. 200	2	0	2	0

In individual tests, variations under the minimum or over the maximum will be permitted as follows provided the average of three consecutive tests is within the above limits:

Sieve Number	*Permissible % of Variation in Individual Tests*
No. 30 and coarser	2
No. 50 and finer	0.5

39–2.02B3 Use of Substandard Gradings 62

39–2.02B4 Mortar Strength 62

39–2.02C Coarse Aggregate

Coarse aggregate shall consist of gravel or gravel containing some crushed gravel. For gravel containing crushed gravel not more than ten per cent (10%) of any size fraction shall be mechanically fractured. Coarse aggregate shall be thoroughly washed to remove clay, loam, bark, alkali, organic matter or other deleterious material.

39–2.02C1 Deleterious Substances 62

39–2.02C2 Wear in Los Angeles Machine

Coarse aggregate shall not have a percentage of wear in the Los Angeles machine in excess of thirty (30) after 500 revolutions.

39–2.02C3 Grading 62

39–2.02C4 Use of Substandard Gradings

Coarse aggregate containing more than the maximum percentage passing any screen may be accepted provided the cement content of the finished concrete is increased at th Contractor's expense an amount as established by the Engineer for use of such substandard grading.

39–2.02C5 Concrete Strength 63

39–2.02D Test Methods for Concrete Aggregates 63

39–2.02D1 Sampling: ASTM Designation D 75 63

39–2.02D2 Amount of Material Finer than No. 200 Sieve in Aggregates: ASTM Designation C 117 63

39–2.02D3 Organic Impurities: ASTM Designation C 40 63

39–2.02D4 Compressive Strength of Concrete: ASTM Designation C 39 63

39–2.02D5 Flexural Strength of Concrete: ASTM Designation C 78 63

39–2.02D6 Percentage of Particles of Less than 1.95 Specific Gravity: AASHO T 150 63

39–2.02D7 Clay Lumps in Aggregates: ASTM Destignation C 142 63

39–2.02D8 Abrasion of Coarse Aggregate by Use of the Los Angeles Machine: ASTM Designation C 131 63

39–2.02D9 Mortar Strength: Compressive Strength of Concrete Mortars, ASTM Designation C 109 63

39–2.03 MIXING WATER 63

39–2.03A Requirements

Water for mixing cement in mortar or concrete when obtained from other sources than Seattle Water Department mains shall be reasonably clear and free from oil. It shall not contain chlorides calculated as sodium chloride in excess of 2,500 parts per million, nor sulphates calculated as sodium sulphate in excess of 1,000 parts per million. It shall not contain any impurities in amount sufficient to cause unsoundness or marked change in time of setting in the cement with which it is mixed nor a reduction in mortar strength of more than five (5) per cent compared to the results obtained with distilled water.

39–2.03B Test Methods 63

39–2.04 REINFORCING STEEL 63

39–2.04A Deformed Steel Bars 63

39–2.04B Wire Mesh 63

39–2.04C Cold Drawn Wire 63

39–2.05 TIE BARS 63

39–2.06 PREMOLDED JOINT FILLER 63

39–2.06A Contraction and Longitudinal Joints 63

39–2.06B Expansion (Through) Joints 63

39–2.07 COTTON MATS 63

39–2.08 WHITE PIGMENTED CURING COMPOUNDS 63

39–2.09 TRANSPARENT CURING COMPOUNDS 63

39–2.10 WATERPROOF PAPER 64

39–2.11 WHITE POLYETHYLENE SHEETING 64

39–2.12 FORMS

Forms for pavements may be of wood, metal or any other suitable material at the option of the Contractor. The material used by the Contractor shall be capable of withstanding the weight and impact forces, vertical and lateral, from the type of finishing machines or other equipment, he will use for constructing the pavements to the requirements of the plans and specifications.

39–2.12A Wood Forms

Lumber, when used for pavement forms shall be "construction" grade Douglas fir, West Coast Lumber Inspection Bureau, or "common structural" per grading of Western Pine Association. Wood forms shall be surfaced on four sides and be in lengths of not less than fourteen (14) feet except for driveways, etc. The Engineer reserves the right to regrade and to reject any lumber that does not comply with the specifications.

39–2.12B Metal Forms

Metal forms when used, shall be free from warps, bends, twists or other defects which impair their usefulness. Defective forms, whether installed on grade or only stored on the work site, shall be removed if so ordered by the Engineer.

39–2.13 JOINT-SEALANTS 64

39–3 CONSTRUCTION-CONCRETE MIXES 64

39–3.01 CLASSIFICATION OF CONCRETE MIXES
(Title changed for City use)

Concrete mixes for cement concrete pavements are classified by the nominal number of ninety-four (94) pound sacks of cement required in the mixed concrete per cubic yard. This classification however, does not constitute a guarantee of yield. For example: Class 6.5, Class 6, Class 5, Class 4 and Class 3 concrete would each, respectively, contain 6.5, 6, 5, 4, and 3 sacks of portland cement per cubic yard of concrete. For each class of concrete the maximum size of coarse aggregate used in the mix may also be specified as follows for a Class 5 concrete:

(1) Class 5 (3).....for 3 inch maximum size aggregate.
(2) Class 5 (1½).....for 1½ inch maximum size aggregate.
(3) Class 5 (¾).....for ¾ inch maximum size aggregate.

The maximum size of aggregate specified will be dependent upon factors of Section 39–2.02A and the proposed pavement slab thickness. In general, three (3) inch aggregate is used for concrete pavement having a thickness of seven (7) inches or more, one and one-half (1½) inch aggregate for pavements less than seven (7) inches in thickness, three-fourths (¾) inch aggregate being used for concrete thickness of less than five (5) inches, i.e., sidewalks, some driveways and curbs when not constructed integral with a pavement.

Unless otherwise specified, Type I portland cement shall be used for classes of concrete specified. When high-early-strength, Type III is required, it will be specified in the plans and special provisions. Its use in other cases will be by the Engineer's authorization.

39–3.01A Cement Content for Designed Age Requirements

Cement content for designed age pavement shall not be used for street pavements except as provided in the special provisions or directed by the Engineer. In general, when specified, the designed age of paving concrete shall be fourteen (14) days, unless otherwise noted in the special provisions. For a given design age, each yard of concrete shall contain not less than the cement content shown in Table I, Standard Mixes Using Portland Cement. The pavement thickness shall be increased as indicated in the table if an increase in thickness is necessary in order to meet the design requirements.

TABLE I

STANDARD MIXES USING PORTLAND CEMENT

DESIGNED AGE MIX	1.25 BBL. MIX Bbls. of Std. Portland Cement Per Cu. Yd. of Concrete	Increase in Thickness of Pavement at All Points in Inches
14 Days (Std)	1.25	None
10 Days	1.35	None
8 Days	1.50	None
6 Days	1.67	None
4 Days	2.00	None

When called for on the plans or the special provisions, or by direction of the Engineer, high-early-strength cement shall be combined with standard cement in the proportions given in Table II, Alternate Mixes Using High-early-strength Cement and Portland Cement.

(For use of high-early-strength cement with portland cement see page .)

The Contractor may at his option choose any of the design age mixes given in tables I and II unless a specific age is specified in the special provisions. Extra compensation for high-early-strength cement will be allowed only when provided in the special provisions, or when the Engineer directs its use.

39–3.02 AIR-ENTRAINED CONCRETE

Air-entrained concrete shall only be used in pavements seven (7) inches or more in thickness and when otherwise required in the special provisions. When air-entrained concrete is required either air-entrained portland cement or an air-entraining admixture shall be added at the mixer. Both the air-entrained cement and the air-entraining admixture shall conform to requirements of Section 39–2.01E.

The volume of air in freshly mixed concrete shall conform to that specified in Table III which follows:

TABLE II

ALTERNATE MIXES USING HIGH-EARLY-STRENGTH CEMENT AND PORTLAND CEMENT

(Each mix to contain 1.25 bbls. cement per cubic yard)

DESIGNED AGE MIX (Days)	MIXER CAPACITY RATED 27E + 10% (Batch of 5 Sacks of Cement)		MIXER CAPACITY RATED 27E + 10% (Batch of 7 Sacks of Cement)	
	Sacks of Portland Cement in Each Batch	Sacks of High-early-strength Cement in Each Batch	Sacks of Portland Cement in Each Batch	Sacks of High-early-strength Cement in Each Batch
14 (Std.)	5	0	7	0
12	4	1	6	1
10	3	2	4	3
8	.....	.....	3	4
7	2	3	2	5
6	1	4	1	6
4	0	5	0	7

TABLE III

AIR CONTENT OF FRESHLY MIXED CONCRETE

Maximum Size of Coarse Aggregate (Inches)	Air Content Per Cent by Volume
1½, 2 and 3	5 ± 1
¾ and 1	6 ± 1
⅜ and ½	7½ ± 1

If the measured air content is found above or below the values contained in Table III, the Contractor shall immediately make changes in mixing or materials as will be necessary to comply with the requirements for air content.

If an air-entraining agent is used, it shall be introduced at the nominal rate of one fluid ounce per sack of cement, but the rate shall be varied, if necessary, to comply with the requirements for air content.

An automatic dispenser, accurate to 10%, which will introduce into the mixing water the specified amount of air-entraining agent for each cycle of mixing, shall be connected to the mixer.

Aggregates shall be adjusted to compensate for increased yield resulting from air-entrainment in each cubic yard of concrete. Adjustment shall be made by decreasing the weight of fine aggregates only, unless otherwise directed by the Engineer.

Other admixtures: Calcium chloride or any other admixture for any purpose other than air-entrainment may be added only upon the approval of the Engineer and under his supervision.

39–3.03 MEASURING OF MATERIALS 65

39–3.03A Aggregates 65

39–3.03B Cement 65

39–3.03C Water 65

39–3.03C1 Water Cement Ratio

The water cement ratio for the classes of concrete shall be as follows for any specified aggregate size:

Class Concrete	Max. Water in Gals. Per Sack Cement (94 lbs.)
3	11.0
4	8.2
5	6.5
5½	6.0
6	5.5
6½	5.1

The slump of the above mixes shall be as specified in Section 39–3.06. If, however, it is necessary to do so for placing purposes, additional water may be used provided additional cement is added to maintain the water cement ratio as shown above.

The amount of water required for the type of work and method of compaction shall be determined by the Engineer; however, the water-cement ratio must not be exceeded.

39–3.03C2 Water Measuring Equipment 65

39–3.04 PROPORTIONING MATERIALS

Fine and coarse aggregate shall be proportioned by weight except that if the project is small, volumetric proportioning may be used with permission of the Engineer. In proportioning, the unit of measure for cement will be by the sack—94 pounds.

Weights of fine and coarse aggregate are based on a bulk specific gravity, saturated surface dry, of 2.67. When volume measurements are used, one cubic foot of sand shall be taken as equivalent to 100 pounds of sand, and one cubic foot of gravel shall be taken as equivalent to 105 pounds of gravel. Corrections must be made for contained moisture in the aggregate and variation in specific gravity.

Concrete mixes shall be proportioned as specified in the following table. The weight of each size of aggregate is the estimated quantity to be used with one sack of cement (94 lbs.). With approval of the Engineer, the proportion of aggregate may be altered to give better workability.

CLASS OF CONCRETE	3(1½)	4(1½)	5(¾)	5(1½)	5(3)	6.5(1½)
Sacks of cement per Cubic Yard	3	4	5	5	5	6.5
Pounds of Fine Dry No. 1 Aggregate	473	346	.....	275	275	201
Pounds of Fine Dry No. 2 Aggregate	.....	.....	291	.....	.....	.....
Pounds of No. 2 Coarse Aggregate	500	365	.....	.....	248	301
Pounds of No. 3 Coarse Aggregate	210	156	.....	.....	166	.....
Pounds of No. 4 Coarse Aggregate	.....	.....	.....	166	.....	.....
Pounds of No. 5 Coarse Aggregate	.....	.....	387	248	.....	.....

39–3.05 TRANSPORTING MATERIALS

Materials shall be transported from the batch plant to the mixer in suitable batch trucks of approved design. The trucks shall meet all legal load restrictions when hauling on a public highway or street. Trucks shall be of sufficient size to prevent spillage from the trucks or from one compartment to another at any time during loading, hauling or dumping operations, and they shall be capable of dumping the entire batch into the mixer skip without spillage of cement or aggregates on the subgrade.

Transportation of cement in the same compartment with the aggregates will be permitted if the aggregates are fed simultaneously with the cement into the truck compartment to avoid loss of the dry cement while enroute to the job site. Batches of concrete materials containing dry cement shall be used the day they are made up. No dry batches left in trucks overnight shall be used for concrete. The Engineer may order suitable tarpaulins or other protective covers to be placed over the loaded batch trucks if he deems it necessary to prevent loss of cement or aggregates.

39–3.06 CONSISTENCY OF CONCRETE 66

39–3.07 CONCRETE MIXED AT ROAD SITE 66

39–3.08 READY MIXED CONCRETE

Ready mixed concrete may be used if the concrete delivered to the job site will meet the requirements of these specifications and the special provisions. The same requirements of Section 39–3.05 shall apply for dry batches delivered in ready mixed trucks.

All cement used in the ready mixed concrete shall comply with specifications in Section 39–2.

The Engineer reserves the right to make tests upon samples of cement taken at any time and by any method, standard or otherwise, and to base acceptance or rejection on the results without regard to prior tests.

Ready mixed concrete may be produced by either a stationary mixer or a truck mixer. After the mixing, the concrete may be agitated by agitator truck or mixer truck. Agitators and mixers shall be identified as to uses, capacity in volume of concrete, and speed of rotation of mixing drums or blades. Stationary mixers shall be equipped with timing devices which will prevent the premature discharge of the concrete batch, and truck mixers shall have counters which will record the revolutions of the drum or blades.

Mixers and agitators must be capable of producing concrete, when delivered to the job site, that is thoroughly mixed with a satisfactory degree of uniformity and with the specified slump. Slump tests made at the one-quarter or three-quarter points of the load, if differing by more than two (2) inches, shall be cause to discontinue use of the equipment until the condition is corrected.

Ready mixed concrete for City work shall be centrally mixed, only, and transported to the job site in agitator or truck mixer operated at the agitator speed specified by the equipment manufacturer. Minimum mixing time shall be sixty (60) seconds.

Concrete transported by agitator or truck mixer shall be completely discharged at the job site within one hour after water is added to the cement and aggregates, or after the addition of cement to the aggregates, or when the concrete has been subjected to a maximum of 250 revolutions of the drum or blades, whichever comes first. A lesser time will be required whenever the weather accelerates the stiffening of the concrete. When a truck mixer is used to mix concrete, the mixing shall begin within thirty minutes after the cement is intermixed with the aggregates.

All equipment used in producing ready mixed concrete shall be maintained in first class condition. Equipment deemed by the Engineer to be inadequate to produce the quality of concrete required under these specifications, shall be removed from service until restored to proper conditons or be replaced by acceptable equipment.

Mixing and transporting equipment shall be adequate in quantity to deliver the required amount of concrete to the job site. The rates of delivery shall be such that the concrete can be properly handled, placed and finished. The interval between batches shall not be more than thirty (30) minutes. Delivery shall be made in a manner that will minimize rehandling and prevent damage to concrete previously placed.

39–3.09 BATCH METERS 67

39–3.10 RETEMPERING 67

39–3.11 REMIXING CONCRETE 67

39–3.12 SUBGRADE

The subgrade shall be constructed and maintained as specified in Section 15–2.02, and Section 15–2.03, respectively. The subgrade shall be approved by the Engineer before concrete is placed thereon.

39–3.12A Extra Concrete for Thickened Edges (New Section)

Unless otherwise shown on the plans or specified in the special specifications, subgrades for concrete pavements shall be constructed with thickened sections as shown on Standard Plan No. 101 at the following locations:

(1) Under the edges of all intersection panels having construction or through expansion joints for borders.

(2) Along the edges of abutting longitudinal construction joints for roadway constructed in two or more operations.

(3) Along the edges of concrete pavement placed adjacent to existing pavement or concrete curb and gutters.

(4) At through transverse roadway expansion joints.

After the subgrade has been approved for placing concrete thereon, it shall be so maintained until the concrete is placed, except that the extra depth along the edges of the pavement as above specified may be removed, when approved by the Engineer, just before the pavement is placed. The subgrade shall be excavated and shaped to provide for the exact section shown on the standard plan for thickened edges.

Measurement and payment for extra concrete for thickened edges with the concrete pavement will be made as specified in Section 39–4 on a per linear foot basis.

39–3.13 FORMS 67

39–3.13A Wood Forms

Wood forms when used, shall be adequately supported by the Contractor to prevent deflection or movement that would result in concrete pavement not in conformance with the plans and specifications.

39–3.13B Metal Forms

Requirements for metal forms shall conform to the requirements of Section 39–3.13A.

39–3.14 COMPACTION, SUBGRADE BEFORE PLACING CONCRETE (Title changed for City use)

The final subgrade, prior to placing concrete thereon shall have been compacted to an unyielding surface with suitable compacting units as specified in Section 15–2.02.

The cost of such rolling of the final subgrade shall be included by the Contractor in the unit bid contract prices for various items of the work.

When concrete mixers and batch trucks, or ready-mix concrete trucks operate upon the finished subgrade when constructing concrete pavement and should the subgrade be rutted or otherwise distorted by such operations, the Contractor shall restore the subgrade as required in Section 15–2.03, before any concrete is placed thereon. No concrete shall be placed upon the repaired grade until it has been accepted by the Engineer.

39–3.15 PLACING, COMPACTING AND FINISHING (Title changed for City use)

Concrete mix of the class specified shall be uniformly placed upon the prepared subgrade to the required depth, by machines or otherwise, and thoroughly compacted to a dense concrete mass, free of air bubbles and gravel pockets, after which the surface shall be finished to the required surface texture and smoothness.

In the construction of cement concrete pavements the Contractor shall assume the responsibility for the entire construction, from placing the concrete between the forms, its consolidation and finishing of same to the final concrete surface, employing any tools and equipment he elects, whether power driven mechanical types, including slip form paving machines, or hand power methods, or any combination of such methods, provided however, the finished pavements are according to the plans and meet the requirements in all respects of these specifications as hereinafter specified.

Finished pavements as required by these specifications, unless otherwise provided in the special provisions, shall

meet the required surface smoothness tolerance therefor indicated on the construction plans, in accordance with the table below when measured under like conditions stated herein:

*SURFACE SMOOTHNESS TOLERANCE TABLE

Type of Roadway Surfacing	Max. Irregularity Under Standard Straight-edge	Plan Designation by Class of Concrete	‡
Arterials, Freeways	⅛-inch	Class (#)	A
Commercial	¼-inch	Class (#)	B
Residential	¼-inch	Class (#)	B
Alleys	⅜-inch	Class (#)	C
Cemet Concrete Base for Asphalt Surfaced Pavement	½-inch	Class (#)	D

#Class of concrete mix and maximum aggregate size.
‡Surface smoothness tolerance classification.

*(1) On straight uniform roadway grades the finished concrete pavement surface shall be tested with a standard ten (10) foot straight-edge placed parallel to the center line of the roadway at overlapping intervals across the width of the pavement. Tests shall be performed as specified in paragraph (4) below.

(2) On horizontal and vertical curves, intersections, or other areas where straight-edging with the standard straight-edge is not practical for complete checking, the Contractor shall use extra care to follow the grade control measures established for the shaping of the pavement to the required elevation. Inspection under these conditions shall be by special template and eye only.

(3) The riding qualities of the finished pavement surfaces for transitions from straight uniform grades to to curves, intersections, on curves or intersections and the transition therefrom to curves and to straight uniform grades again shall be as smooth and free from abrupt changes as practical to match the comparable smoothness for straight-edged uniform grades.

(4) Responsibility for finished pavement smoothness shall be a joint responsibility between the Engineer and Contractor as herein described. The Engineer shall inspect the finished surface of the pavement slab as often as necessary to determine compliance to the specified surface smoothness tolerance. Such inspection shall be performed continuously as close behind the finishing operation as the condition of the plastic concrete permits and always before the concrete takes a final hard set. Irregularities in the finished surface exceeding that allowable shall be reported immediately to the Contractor.

For the purpose of receiving such reports and taking timely action thereon, whenever concrete is being placed and finished, the Contractor shall have a responsible person or persons available at all times during the finishing operation to whom such reports may be made. The Contractor shall correct any irregularities found in the surface smoothness that the Engineer may point out and call to his attention, and shall, after making corrections necessary, recheck the surface jointly with the Engineer for final approval.

In the event the Contractor fails to promptly correct irregularities found and reported to him by the Engineer prior to the concrete taking a hard set, he shall, when practical, grind the unsatisfactory surface of the pavement later to meet the specified surface smoothness. Patching of low areas after the pavement has set hard in lieu of grinding, shall not be permitted unless authorized by the Engineer.

Pavement areas that cannot be corrected satisfactorily by grinding, or patching when authorized by the Engineer, shall be entirely removed and replaced at the Contractor's expense. When removal and replacement are necessary, the entire panel or panels as defined by contraction or other type joints in which the unsatisfactory areas are located, shall be removed and repaved.

39–3.15A Placing Concrete at Expansion Joints

Concrete placement around expansion joints, constructed in accordance with Section 39–3.18E, shall be such that the expansion joint assembly will not be disturbed and remains in a straight line perpendicular to the subgrade, as shown on Standard Plan No. 101. The concrete shall then be spaded thoroughly or vibrated along the entire length of joint, both sides, to consolidate the concrete with no rock pockets anywhere at the joint. Should rock pockets be exposed at the ends of expansion joints when forms are removed, the Contractor shall correct the rock pocket condition to the requirements for pavement construction by removing loose aggregates and grouting in accordance with good workmanship. Should the rock pocket be extensive to a degree that repair by grouting will not restore the pavement slab for strength to resist pavement slab failure at the joint, the entire panel as defined by surrounding contraction joints, or as otherwise required by the Engineer, shall be removed and replaced by the Contractor at his expense, to the requirements of the construction.

39–3.15B Placing Concrete With Reinforcing Steel Bars or Wire Mesh

When placing of reinforcing steel bar mats or wire mesh is required, the concrete placement shall be in two courses unless otherwise authorized by the Engineer. The first course shall be leveled off at the required elevation as designated on the plans or as directed by the Engineer for positioning the reinforcement.

The reinforcement mats or wire mesh shall then be placed on the surface of the first course and the second course of concrete placed to complete the pavement. No more than forty-five (45) minutes shall elapse between mixing of the first course and placing of the final second course.

Reinforcement shall be free of dirt, mill scale, oil, grease or other foreign material that may impair bond. Steel, coated with rust, may be used if the oxidations are not deep or loose coated.

Successive mats of steel or wire mesh shall be securely lapped together and tied so that longitudinal bars will lap twenty (20) times the nominal diameter of the longitudinal reinforcement used unless otherwise shown on the plans.

Reinforcing steel or wire mesh shall be laid as a continuous mat. Continuity shall be maintained between expansion joints. Steel shall terminate within four (4) inches of the joint.

Concrete may be placed in one lift, provided a method is used to position and secure the reinforcing bars or wire mesh at the designated locations in the slab.

39–3.16 COMPACTING CONCRETE

Concrete may be compacted by (1) hand methods, (2) machine methods, (3) combined machine and vibrators, or (4) any suitable combination of these methods, at the Contractor's option as specified in Section 39–3.15.

The Contractor shall at all times have the necessary equipment on the job for hand compacting in case of an emergency through failure of other methods.

39–3.16A Hand Compacting 68
(Contractor's Option)

39–3.16B Machine Compacting 68
(Contractor's Option)

39–3.16C Combined Vibration and Machine Compacting 68
(Contractor's Option)

39–3.17 WATER

Water for pavement construction will be furnished and paid for as provided in Section 16.

39–3.18 JOINTS

Transverse and longitudinal joints for street pavements may be contraction joints, construction or expansion joints as shown on Standard Plan No. 101. When the pavements abuts an existing pavement, the locations of the joints in the new pavement shall coincide with the joints in the existing pavement unless otherwise shown on the plans or specified in the special provisions. Location of joints for new pavements where existing pavements are not involved shall be constructed as shown on the plans and in accordance with these specifications.

39–3.18A Formed Transverse Contraction Joints 69

39–3.18B Construction of Formed Contraction Joints

Formed contraction joints shall be constructed by imbedding in the concrete surface while plastic, a preformed joint material conforming to the requirements specified in Section 39–2.06. The joint material shall be cut to the exact width for depth contraction joint below the concrete finished surfaces and the length shall be continuous to within one-fourth (¼) inch of both edges of the complete panel. Transverse contraction joints of two contiguous lanes must meet at a common point at the center line.

Transverse contraction joints shall be imbedded after compaction of the concrete to required cross section and before the initial set in the concrete has occurred after finishing. A slot groove shall be cut into the surface at the location of the joint, using a tool of suitable design to not cut a groove deeper than necessary for the planned depth of the joint filler. The tool must be maintained free of concrete encrustations or other debris that would prevent cutting neat grooves as required, perpendicular to the pavement surface, and in a straight line.

The joint filler shall be inserted into the groove with the top edge of the filler material flush with pavement surface, with a deviation of not more than one-eighth (⅛) inch below the finished pavement surface. The joint filler shall be perpendicular to the surface of the pavement and always in a straight line.

Preformed joint filler shall not be less than $\frac{3}{16}$ inch thick and a minimum depth of two (2) inches in the concrete. For slabs having thickness of more than eight (8) inches, the depth of contraction joints shall be one-fourth (¼) of the depth of slab.

After the joint filler has been imbedded in the concrete, the surface of the pavement shall be finished against the filler strip to restore the surface finish. After finishing, the entire area of the joint shall be true to grade and surface texture and smoothness required. No payment will be made for contraction joint material or its placement, and all costs therefor shall be included in the unit contract price per square yard for the cement concrete being constructed. Exception is made, however, that if there should be alternate bid items in the proposal for contraction (dummy) joints and sawed contraction joints, then in that event the bid proposal will include an item per linear foot for "Transverse Contraction Joint," the price for which shall include all costs for the furnishing and placing of the joint filler in accordance with these specifications.

39–3.18C Sawed Contraction Joints 70

39–3.18D Transverse Construction Joints 70

39–3.18E Transverse Expansion Joints 70

39–3.18F Sealing Expansion Joints 70

39–3.18G Longitudinal Contraction Joints 70

39–3.18H Standard Location for Longitudinal Joints 70

39–3.18I Longitudinal Expansion Joints 70

39–3.19 FINISHING CONCRETE

As specified in Section 39–3.15, hand finishing or machine finishing of the entire pavement surface will be permitted unless otherwise provided in the special provisions.

On all vertical curves and at irregular intersections, modified tools shall be provided as necessary to secure a smooth, uniform contour and surface.

All tools shall be kept in first class working order, not worn or defective in any way, and in sufficient number for the finishing work to proceed efficiently.

39–3.19A Hand Finish 71
(Contractor's option, second paragraph Section 39–3.15.)

39–3.19B Machine Finishing 71
(Contractor's option, second paragraph Section 39–3.15.)

39–3.19C Edging 71

39–3.19D Final Finish 71

39–3.19E Surface Smoothness

Final surface smoothness of pavement shall be established as described in Section 39–3.15.

39–3.20 CURING AND PROTECTION 72

39–3.20A Sprinkling System 72

39–3.20B Saturated Mats 72

39–3.02C Waterproof Paper 72

39–3.20D White Polyethylene Sheeting 72

39–3.20E White Liquid Membrane Curing Compound 72

39–3.20F Transparent Liquid Curing Compound 72

39–3.20G Emulsified Asphalt 72

39–3.20H Curing in Hot Weather 72

39–3.21 COLD WEATHER WORK 72

39–3.22 CONCRETE PAVEMENT CONSTRUCTION IN SINGLE LANE

Unless otherwise shown on the plans or in special provisions, the pavement shall be constructed in single lanes. Concrete shall not be placed in a succeeding lane sooner than 48 hours after finishing of the first lane. Whenever possible, the mixer shall be operated on the subgrade or on the shoulder adjacent to the lane being paved.

Whenever the operation of a mixer and trucks, or ready-mix transit trucks is necessary upon newly paved concrete because of lack of space elsewhere, such operation for paving shall be allowed by the Engineer, but only under the following restrictions:

(1) The concrete in the new lane shall have attained a compressive strength of twenty-five hundred (2,500) pounds per square inch, as determined by the Engineer.

(2) The surface of the new pavement shall be protected from scarring and abrasion by operating the mixer on mats, skids or other protective devices satisfactory to the Engineer. Any accumulation of concrete, sand, and gravel, or other debris deposited on the new pavement as a result of operating the mixer and trucks or ready-mix transit trucks thereon shall be completely removed.

(3) Suitable cushioning material shall be placed on the bottom of the mixer skip so that the pavement is protected against severe local shocks when the skip is lowered to the pavement to receive a new charge of materials. Lowering the skip in a careless manner will not be permitted.

(4) The Contractor shall replace at his own expense any panels on the new pavement that are cracked or broken as a result of operating the mixer thereon.

A protective ramp shall be constructed at the pavement edge where vehicles may be driven on and off the pavement. The forms shall be left on the outside edge of the first lane at all turnouts until the pavement is opened to traffic.

When tie bars are specified, they shall be placed before the concrete is struck off during the last pass with the strike-off screed whether hand or machine operated. The tie bars shall be protected from traffic by bending down and back against the side form. Prior to placing the adjacent lane, the tie bars shall be straightened.

A metal strip three (3) inches wide by one-eighth (⅛) inch thick and at least five (5) feet in length shall be placed on the complete pavement lane near to the common joint with the adjacent lane to be paved, and the concrete placed in the adjacent lane shall be struck off from the plate, whether by machine or hand placement.

All roadways, shoulders, and subgrade in use by the Contractor shall be kept adquately dampened to prevent dust upon the freshly placed concrete.

39–3.23 CONCRETE BASE PAVEMENT

Cement concrete pavement which is constructed as a base for an asphalt concrete pavement, shall meet the same requirements for construction of cement concrete pavement except for a surface smoothness tolerance of one-half (½) inch under the straight-edge standard of Section 39–3.15 for a Class (1½) D concrete mix.

39–3.24 VIBRATING SCREED CONCRETE PAVEMENT CONSTRUCTION 73

(Contractor's option, second paragraph Section 39–3.15.)

39–3.24A Materials 73

39–3.24B Construction Details 73

(Refer to Section 39–3.15 for Contractor's responsibility.)

39–3.25 TEMPORARY TRAFFIC CROSSINGS AT NEW PAVEMENTS 74

39–3.26 BARRICADES AND SAFEGUARDS..... 74

39–3.27 OPENING PAVEMENTS TO TRAFFIC

The Contractor shall not open newly constructed cement concrete pavements to traffic until the concrete has attained a compressive strength of twenty-five hundred (2,500) pounds per square inch, or for a longer period when so directed by the Engineer.

Streets with curbs shall not be opened until the curb has cured for at least 72 hours. If the curb has not attained the above compressive strength for the pavement, the Contractor shall place form lumber on the pavement two feet away from the curb, or standard barricades may be erected and maintained when authorized by the Engineer. The curb protection shall remain in place as long as necessary to protect the curb.

39–3.28 CLEANUP 74

39–3.29 CEMENT CONCRETE ALLEY PAVEMENT (New Section)

Cement concrete alley pavement shall be constructed as Class 5 (1½) C pavement as defined in Section 39–3.15, having a slab thickness and cross section as shown on Standard Plan No. 104, unless otherwise shown on the plans or specified in the special provisions or directed by the Engineer, as hereinafter described.

Preparation of subgrade, setting forms, placing concrete, joints, finishing, curing, protection, etc., shall conform in all respects with the applicable specifications for street pavements, including measurement and payment.

39–3.29A Integral Inverted Alley Pavement Edge Wall (New Section)

When called for on the plan or when requested by the Engineer, the Contractor shall construct an inverted concrete wall integral with, under and along the edge of the alley pavement slab conforming to the details shown on Standard Plan No. 104. Concrete placed for the inverted edge wall shall be of the same class as used for the alley pavement.

The exposed surface of integral inverted walls shall be finished to a uniform smooth pleasing appearance, Class 3 surface finished as specified in Section 107–3.16.

When such inverted edge walls are shown on the plan, a bid price will be taken therefor, and payment shall be made accordingly. When not shown on the plan but required by the Engineer during progress of the work, payment therefor shall be made as extra work provided in Section 9.03.

39–3.29B Extra Concrete for Alley Approach Ramp (New Section)

When constructing and finishing cement concrete alley pavements the Engineer may order the Contractor to place extra additional fresh concrete to shape the surface of the alley pavement without the use of forms other than a containing header board, when necessary, upon the top of the alley pavement side form, to construct an integral ramp for vehicular access to private property abutting the alley pavement. Such extra integral concrete when ordered, shall be placed and finished by the Contractor to the additional thickness and limits required to make the necessary approach as directed by the Engineer. Provided, however, that the additional thickness required to be placed and finished shall not have a maximum depth above the original plan grade for the concrete surface at any point greater than six (6) inches within the area limits of the approach ramp.

Payment for placing and finishing such cement concrete ramps not exceeding six (6) inches in thickness above plan grade of alley pavement shall be made at the same price per square yard as bid for cement concrete alley pavement by increasing the area of alley pavement by the amount of the area occupied by such ramps. Measurement shall be by square yard to the neat line area of each ramp so placed.

39–4 MEASUREMENT AND PAYMENT

Payment will be made for such of the following bid items as are included in any particular contract:

(1) "(Thickness) Cement Concrete Pavement Class ( )," per square yard.
(2) "Extra Concrete for Thickened Edge (dimensions)," per linear foot.
(3) "Steel Reinforcing Bars," per pound.
(4) "Sawing Contraction Control Joints (depth)," per linear foot.
(5) "Temporary Pavement Crossings," per each.

39–4.01 CEMENT CONCRETE PAVEMENT

Payment for cement concrete pavement of the class specified, as identified in Section 39–3.15, shall be full compensation for the thickness of such pavements complete in place.

Measurement for payment shall be by the square yard of concrete in place for continuous slabs. When an integral curb or a doweled curb is constructed in conjunction with the pavement slab, the curb area shall not be measured for payment as cement concrete pavement, pavement area measurement shall be to the front face of the integral or doweled curb.

39–4.02 EXTRA CONCRETE FOR THICKENED EDGE 74

39–4.03 STEEL REINFORCING BARS..... 74

39–4.04 SAWING CONTRACTION CONTROL JOINTS 74

39–4.05 EXTRA FOR FURNISHING HIGH-EARLY STRENGTH CEMENT 74

39–4.06 TEMPORARY PAVEMENT CROSSINGS..... 74

39–4.07 COMPACTING EQUIPMENT 74

39–4.08 FORMED CONTRACTION JOINTS (New Section)

Measurement for payment of formed contraction joints when permitted as an alternate as provided in Section 39–3.18B will be by the linear foot for the actual length of joint material imbedded and finished in the concrete surface.

The unit contract price per linear foot shall be full compensation for all labor, materials, equipment and incidental work required to construct the joint with premoulded joint material complete in place, as specified in Section 39–3.18B.

Section 40—Cement Concrete Curb, Curb and Gutter

40–1 DESCRIPTION

Where shown on the construction plans or where directed by the Engineer, cement concrete curb, and curb and gutter of the types specified shall be constructed in accordance with these specifications.

40–1.01 CLASSIFICATION (Title changed for City use)

Classification of curbs are numbered for type of curb, to correspond to the Standard Plans Nos. 108, 109, 110 and 111 respectively, each showing three kinds of construction, namely:

(a) Monolithic.....Separate curb complete.
(b) Curb and Gutter.....Combined curb and gutter.
(c) Integral.....Curb constructed in conjunction with paving operations, or as a doweled curb.

For example, should the project plans call for Type 108 curbs as shown on Standard Plan No. 108, the plan abbreviations for the three curb types as required, would be:

Curb Type 108A.....Single complete curb section.
Curb Type 108B.....Combined curb and gutter section only.
Curb Type 108C.....Curb constructed integral with pavement construction, or later as a curb doweled to the pavement.

The above example, likewise, would apply to specifying Type 109, 110 or 111 curbs, respectively, on the proposal plans.

40–1.02 CEMENT CONCRETE CURBS..... 75

40–1.02A Curb, Type 108C and Type 110C (Title changed for City use)

Type 108C and Type 110C curbs are constructed in conjunction with cement concrete pavement, as shown on Standard Plans Nos. 108 and 110, respectively.

40–1.02B Low Curb, Type 109 (Title changed for City use)

Type 109 curb is used primarily as a curb in industrial areas where vehicle traffic onto and across planting and sidewalk areas is authorized.

40–1.02C Separate Curb (Title changed for City use)

Separate curb is a curb having limited application to special reconstruction along edges of existing pavement where other types of curbs are not suitable. See "A" type curbs of Standard Plans Nos. 108, 109, 110 and 111.

40–1.02D Transitional Curb (Not used)..... 75

40–1.03 CURB AND GUTTER

Curb and gutter shall be used on all asphalt paved streets unless otherwise noted in the special provisions. Construction shall be as shown on the standard plans for Type 108B, Types 109B, Type 110B and Type 111B curbs.

40–2 MATERIALS AND FORMS..... 75

40–2.01 CONCRETE

Concrete for curbs shall be Class 5 (1½) as defined in Section 39–3, unless otherwise specified in the special provisions.

40–2.02 REINFORCING STEEL AND STEEL DOWELS

Reinforcing steel and steel dowels shall conform to the requirements contained in Section 39–2.04A.

40–2.03 PREFORMED EXPANSION AND DUMMY JOINT FILLER 75

40–2.04 CURING COMPOUNDS 75

40–2.05 FORMS

Forms may be of wood, or metal, or any other material at the option of the Contractor, provided the forms as constructed, result in a completed curb of the required cross section.

40–2.05A Wood Forms

Wood when used for forms shall be surfaced on four (4) sides (S4S) and "construction grade," Douglas Fir, West Coast Lumber Inspection Bureau, or be "common structural," per grading of Western Pine Association.

Form lumber shall vary from 12 to 16 feet in length, be free of warp and the ends true. Any form lumber which has defects which would impair the appearance or structural utility of the completed curb, or curb and gutter, shall not be used.

Where short radius forms are required, one-inch sound lumber (S4S) or plywood may be used.

40–2.05B Steel Forms

Steel forms when used shall result in completed curb equal to that of curb formed with wood or other satisfactory material.

40–3 CONSTRUCTION DETAILS 75

40–3.01 CURBS 75

40–3.01A Erecting Forms

Sufficient support shall be given to the forms by the Contractor to prevent movement in any direction, resulting from the weight of the concrete or the concrete placement. Forms shall not be set until the subgrade has been compacted within one inch of the established grade. Forms shall be clean and well oiled prior to setting in place. When set, the top of the form shall not depart from grade more than one-eighth (⅛) inch when checked with a ten-foot straightedge. The alignment shall not vary more than one-eighth inch in ten (10) feet. Immediately prior to placing the concrete, forms shall be carefully inspected for proper grading, alignment and rigid construction. Adjustments and repairs as needed shall be completed before placing concrete.

40–3.01B Placing Concrete

The subgrade shall be properly compacted and brought to specified grade before placing concrete. The subgrade shall be at an optimum moisture content and shall be approved by the Engineer immediately prior to the placement of the concrete. Concrete shall be spaded and tamped thoroughly into the forms to provide a dense, compacted concrete free of rock pockets. The exposed surfaces shall be floated, finished and brushed longitudinally with a fibre hair brush approved by the Engineer.

The rate of concrete placement shall not exceed the rate at which the various placing and finishing operations can be performed in accordance with these specifications.

When concrete curb is placed by a slip form curb machine, the machine shall be capable of placing a dense, uniformly compacted concrete to exact section, line and grade.

40–3.01C Dowels and Keyways

Dowels and keyways shall be placed in the pavement slab as detailed on Standard Plan No. 112.

Keyways shall be formed by forcing a pointed stick, two inches square, into the plastic concrete midway between each set of dowels. The dowel bars shall be set while the concrete is still plastic enough to not require hammering them into place.

In lieu of the straight dowel bar, three-eighths (⅜) inch dowel bar bent into the shape of a "U" may be used. Dimensions of this alternate dowel are shown on Standard Plan No. 112. When this type of dowel is used, the keyway may be omitted.

40–3.01D Stripping Forms and Finishing

When forms are stripped from newly placed curbs the fresh exposed curb faces shall immediately be checked for

defects. Any defects found shall be corrected as soon as possible and before the concrete dries, in a workmanlike manner to the requirements of the construction.

40–3.01E Curing 76

40–3.01F Expansion and Contraction Joints
(Title changed for City use)

All expansion and contraction joints in the pavement slab shall extend entirely through the upper section of the curb. Joint filler placed in the upper curb section shall be for the full curb section above the pavement surface, perpendicular to the surface of the pavement, and in full butt contact with the joint filler in the base section.

Expansion and contraction joints in Type 111C curb, unless otherwise specified in the special specifications, shall be framed in place with one (1) inch triangular fillets fastened to the front and top face of the forms on each side of the joint material. After stripping the forms, the expansion and contraction joint filler material shall be cut to the bottom of the groove thus formed.

40–3.01G Curb Drains

Weep holes shall be placed through the curbs for venting all existing drains. Where no drains exist and the curb and pavement are being constructed in a cut section, weep holes shall be placed in the curb approximately every sixty (60) feet apart, unless otherwise shown on the plans, or provided in the special specifications.

The weep holes shall be three (3) inch diameter holes formed in the curb with galvanized sheet metal or plastic tubes making a neat appearance at the face of the curb. Curb drains will be paid for at the unit contract price per each.

40–3.01H Finished Work

Curbs when finished shall be to specified line and grade, of dense concrete having a uniform surface texture. Finished curbs having defects from poor workmanship shall be corrected by the Contractor, at his expense, to the requirements of the construction by whatsoever means necessary.

40–3.02 CURB, INTEGRAL AND DOWELED CONSTRUCTION (Title changed for City use)

Curbs Type 108C, Type 110C and Type 111C, respectively, constructed upon the curb base placed with the paving operation, may be constructed integral with the actual paving operation, or later as a delayed doweled curb, at the Contractor's option.

40–3.02A Construction Integral with Pavement (New Section)

Curb forms shall be set by the Contractor as soon as practical during the paving operation. Forms shall be of such materials and dimensions and be so supported that the specified curb shall be accurately formed to the details shown on the standard plan.

Special care shall be taken to assure that the curb construction does not lag behind the pavement construction to the extent that an unbonded "cold joint" is formed between the top and bottom sections for the curb.

In placing the curb concrete, sufficient consolidation shall be done to achieve positive bond with the base and to eliminate all voids in the curb.

40–3.02B Delayed Construction as Doweled Curb
(New Section)

When the Contractor's option is to construct the curb after pavement has been placed and cured, he shall furnish and place deformed reinforcing steel dowel pins along the center line of the base for the curb section in the pavement slab. The size, shape and spacing of the dowels shall be as shown on the Standard Plan No. 12 for the type of curb specified.

In the event that the reinforcing steel dowels are not properly set while the concrete is plastic, and loose unbonded dowels subsequently result. all such dowels shall be replaced by the Contractor before the top section of the curb is formed, by drilling one (1) inch holes in the concrete base and grouting replacement dowel steel into place using a cement grout proportioned one (1) part portland cement to two (2) parts sand.

In transporting concrete over the new pavement slab to construct doweled curbs, if ready-mix concrete trucks are used, the concrete shall have attained a compressive strength of twenty-five hundred (2,500) pounds per square inch, as determined by the Engineer.

If concrete buggies are used, forty-eight (48) hours shall have elapsed between the placing of the new pavement slab and start of curb construction. Damage to liquid curing membrane on the pavement surface resulting from the curb construction shall be replaced by respraying the area damaged with curing compound.

40–3.03 LOW CURB, TYPE 109B and 109C
(Title changed for City use)

Type 109B and 109C curb shall be constructed integral with the gutter section, or pavement slab, or integral with a public or private driveway. In the latter instance, the curb and gutter section of the curb area abutting the roadway pavement slab, whichever applies, shall be blocked out to provide for later installation of the driveway complete with curb and gutter or curb section.

40–3.04 CURBS, SEPARATE TYPE
(Title changed for City use)

Monolithic curbs Type 108A, Type 109A, Type 110A and Type 111A shall be constructed upon a compacted subgrade to the required line and grade either separately or abutting existing pavements. Excavation required for their construction shall be considered as incidental to the cost of the curb and no separate payment will be made therefor.

40–3.05 TRANSITIONAL CURB

Whenever transitional curbs of varying height or cross section are required to connect two types of curbs, details therefor will be shown on the plans and will be paid for as provided in the proposal.

40–3.06 CURB AND GUTTER

Curb and gutter Type 108B, Type 109B, Type 110B and Type 111B, respectively, shall each be constructed upon a compacted subgrade prepared in accordance with the applicable subgrade requirements specified for cement concrete pavement in Section 39. Likewise, placing, consolidation, jointing, finishing and curing of the concrete shall match the requirements for concrete curb consolidation hereinbefore specified under Section 40–3.01.

40–4 MEASUREMENT AND PAYMENT

Measurement and payment will be made for such of the following bid items as may appear in the proposal:

(1) "Cement Concrete Curb, Type 108 (A,B,C)," per linear foot.
(2) Cement Concrete Curb, Type 109 (A,B,C)," per linear foot.
(3) "Cement Concrete Curb, Type 110 (A,B,C)," per linear foot.
(4) "Cement Concrete Curb, Type 111 (A,B,C)," per linear foot.
(5) 'Curb Drain," per each.

Concrete curbs and curb and gutter will be measured by the linear foot along the face of the curb for the actual length constructed.

The unit contract prices for the above items shall be full compensation for furnishing all labor, materials, equipment work, and incidentals necessary to construct the various types of curb, and curb and gutter in accordance with the requirements of the specifications. Excavation, select materials and other work items will be paid for by applicable bid items in the proposal.

Section 41—Cement Concrete Driveways (Title changed for City use)

41–1 DESCRIPTION

Cement concrete driveways, public and private, shall be constructed at the locations shown on the construction plans and where directed by the Engineer, and shall be in accordance with these specifications and Standard Plans Nos. 105, 106 and 107.

The number of private driveways may be increased over that shown on the construction plans, if required by the Engineer. Sufficient notice of the additional driveway installation shall be given by the Engineer to enable the Contractor to provide for the additional driveway construction prior to the placing of concrete for street pavement or sidewalks in the block where the driveway is located.

The driveways shall be altered as may be necessary by the proposal plans when center lines are connecting with pavements or crossing sidewalks at an agle different than that shown on the standard plans therefor.

41–1.01 CLASSIFICATION AND USAGE

Driveways are classified by the standard plan number pertaining to the kind of driveway constructed.

41–1.01A Cement Concrete Driveway, Type 105
(Title changed for city use)

Type 105 driveways are driveways constructed as shown on Standard Plan No. 105, installed between cement concrete pavements and the street margin to provide a traffic connection to a public alley right of way.

41–1.01B Cement Concrete Driveway, Type 106
(Title changed for city use)

Type 106 driveways are driveways constructed as shown on Standard Plan No. 106, installed between cement concrete pavements and the street margin to provide vehicular access to private property.

41–1.01C Cement Concrete Driveway, Type 107
(Title changed for city use)

Type 107 driveways are the same as Type 105 and Type 106 driveways except that they are constructed in conjunction with cement concrete sidewalks to the same width as the sidewalk construction and to the length as shown on the project plan.

41–1.01D Cement Concrete Driveway, Type D (Not used)

This A.P.W.A. driveway is a City Type 105A or 106A driveway of Standard Plans 105 and 106, when constructed with or abutting "B" type curbs of Section 40–3.06.

41–1.01E Cement Concrete Driveway, Alley Return, Type A.... 77
(Not used)

41–1.01F Cement Concrete Driveway, Alley Return, Type B.... 77
(Not used)

41–2 MATERIALS 77

41–3 CONSTRUCTION DETAILS 77

41–3.01 GENERAL REQUIREMENTS
(Title changed for City use)

Driveways Type 105 and Type 106, constructed in conjunction with paving projects, shall be constructed separately from the street paving operations, by either method shown on the standard plans at the Contractor's option, unless the construction alternate is limited by the special provisions, or the Engineer. Provision for the curb area only, either by construction of depressed curb alternate "A," or blockout of curb area for driveway, alternate "B," shall be provided for when street paving is being placed. Concrete for driveways shall not be placed until after the street paving has cured the required time, Section 39–3.20, unless a lesser time is authorized by the Engineer.

Type 107 driveways may be placed simultaneously with the sidewalk concrete placing operation, using the same concrete mix, Class 5 (¾) A of Section 42 for sidewalk construction.

Premoulded joint filler for expansion joints shall be positioned as shown on the standard plans and edged with a one-fourth (¼) inch radius tool during the finishing operation.

Final finish texture of driveway concrete surfaces, after the specified surface smooth tolerance, Class 5 (1½) A, as defined in Section 39–3.15, has been obtained, shall be a surface made by brushing the surface with an approved fibre brush in a transverse direction to the center line of the driveway.

41–3.02 EXCAVATION, SUBGRADE PREPARATION AND FORMS (Title changed for City use)

Excavation for driveways and its disposal shall be considered incidental to the driveway construction and all costs therefor included in the unit bid prices in the proposal for driveway construction.

Subgrade preparation for driveways and compaction required shall conform to the applicable requirements of Section 15–2.02 to prepare a firm, unyielding subgrade for the driveway, acceptable to the Engineer.

Forms for driveways may be of any kind, as specified in Section 39–3.13, provided the forms used will result in a finished concrete driveway of the specified thickness, cross section, alignment and size shown on the plans.

41–3.03 PLACING CONCRETE, CONSOLIDATION AND FINISHING (Title changed for City use)

Placing concrete for driveways, compaction and finishing shall be to the applicable requirements, using suitable tools and equipment as required for cement concrete pavement construction in Section 39. Concrete mix shall be Class 5 (1½) unless otherwise specified, finished to a "D" surface smoothness tolerance of Section 39–3.15, i.e., Class 5 (1½) D.

41–3.04 CURING AND PROTECTION

Curing materials and procedures shall be by one of the methods in Section 39. The curing agent shall be applied immediately after the final finish brushing and shall be maintained for the period specified in Section 39–3.20.

Before placing concrete for driveways, the Contractor shall have available for immediate use, if required in the event of unsuitable weather conditions, enough protective polyethylene plastic sheeting or waterproof paper to cover the driveways for protection.

Driveways shall be protected against damage or defacement of any kind until they have been accepted. Damaged or defaced driveways shall be repaired by the Contractor at his expense, with expert workmanship, to the requirements of the original construction.

41–4 MEASUREMENT

Measurement for cement concrete driveways will be by the square yard for the class and thickness of driveways actually placed in conformance with the methods shown on the standard plans.

41–5 PAYMENT

Payment will be made for the following bid items as are included in the contract:

(1) "Type 105 Cement Concrete Driveway (thickness)," per square yard.
(2) "Type 106 Cement Concrete Driveway (thickness)," per square yard.
(3) "Type 107 Cement Concrete Driveway (thickness)," per square yard.

The unit contract prices shall be full compensation for all labor, tools, equipment and materials necessary to perform the work as specified. Any work which is essential to the construction shall be considered incidental and the costs thereof shall be included in the pay items of the proposal.

Selected imported subgrade materials for subgrade preparation and compaction will be measured and paid for in accordance with applicable sections of these standard specifications only if they are listed in the bid items of the proposal; otherwise, the work involved shall be incidental to the driveway construction.

Section 42—Cement Concrete Sidewalks

42–1 DESCRIPTION

Standard cement concrete sidewalks, three and one-half (3½) inches in thickness to the length and widths specified on the contract plans, shall be constructed in accordance with Standard Plan No. 114 and these specifications.

42–2 MATERIALS

Cement, fine and coarse aggregate, reinforcing steel, premoulded joint materials for construction of sidewalks shall conform to the applicable requirements therefor in Section 39–2.

42–3 CONSTRUCTION DETAILS 78

42–3.01 EXCAVATION AND SUBGRADE

Excavation for cement concrete sidewalks shall be considered "Unclassified Excavation," unless otherwise provided in the special provisions. Where the proposal plans call for both grading and construction of cement concrete sidewalks at the same locations, the requirements for clearing, grubbing and earthwork as excavation or embankments shall be in accordance with the requirements therefor in Section 12 and Section 13.

Where a graded or paved street is being improved by the construction of cement concrete sidewalks the entire planting and sidewalk area, between the street margin and the edge of graded roadway or a pavement curb, shall be cleared and grubbed of all sod, trees, shrubs and other debris to establish a graded earth surface sloping for drainage from the street margin to edge of the roadway or pavement curb as shown, Section A-A, of Standard Plan No. 114, unless otherwise provided by the project plans, or special provisions. Where ornamental trees, shrubs or lawns shall have been placed in the planting area legally, where sidewalk is to be constructed, they will be shown on the plans and referenced in the special provisions to be preserved. All other trees, shrubs and lawns, etc., shall be considered illegal and removed.

42–3.02 FORMS AND FINE GRADING

Subgrade preparation setting forms and compaction as required for cement concrete sidewalks construction, shall conform to the applicable requirements of Section 39–2.02, Section 39–3.13 and Section 39–3.14, respectively.

42–3.03 PLACING, CONSOLIDATING AND FINISHING (Title changed for City use)

Placing concrete, its consolidation and finishing operations shall be to the applicable requirements therefor in Section 39–15 for a cement concrete pavement. The finished surface smoothness tolerance for sidewalks shall be as defined for a concrete mix Class 5 (¾) A.

Final surface finish texture shall be a surface brushed in a transverse direction to the longitudinal axis of the sidewalk with an approved fibre brush; and the surface then marked off in thirty (30) inch squares for sidewalks five (5) feet in width; thirty-six (36) squares for a six (6) foot width; or such other squares as may be shown on the plans for sidewalks widths greater than the above, or to conform to existing sidewalks to which the new walks connect. The square markings shall be made with a jointing tool that will indent the V-shaped groove in the surface one-fourth (¼) inch deep. Locations of expansion and contraction joints shall be as specified hereinafter.

42–3.04 CURING AND PROTECTION

Immediately following the final finishing of concrete by marking and edging, the surface shall be covered for curing by spraying with white pigmented curing compound, as specified in Section 39–3.20 for the required time period of five (5) days, unless a shorter time is specified in the special provisions or authorized by the Engineer.

The sidewalk shall be protected against damage or defacement of any kind after its construction throughout the curing period and until the sidewalk is accepted by the City. Damaged or defaced sidewalk shall be repaired by skilled workmanship to the standards of the original construction at the Contractor's expense.

42–3.05 SIDEWALK DRAINS (New Section)

Where shown on the construction plans for sidewalks or where directed by the Engineer, four (4) inch galvanized steel pipe shall be placed under the sidewalk in one length and extended across the planting area to the roadway gutter line, or through curb if existing, as shown on Standard Plan No. 117.

The depth of the pipe and its alignment for drainage shall be determined in the field at the time of excavating for the sidewalk construction for a standard depth of gravel pocket as shown on the standard plan.

Sidewalk drain pipe will paid for on a basis of linear feet, for inlet depths at the gravel pocket of twelve (12), eighteen (18), and twenty-four (24) inches, whichever depth is specified. The unit price shall include in addition to excavating the trench under sidewalk, placing pipe, backfilling; the concrete collar for the outlet end; gravel pocket twelve (12) inches wide by twenty-four (24) inches long filled with the specified filter material and the screen at the outlet having one (1) inch square openings, all as shown on the standard plan.

42–3.06 EXPANSION AND CONTRACTION JOINTS (New Section)

Standard locations for expansion joints for sidewalks are:

(1) At street margins produced and along the back of pavement curbs where sidewalks meet the curb as shown on Standard Plan No. 114.

(2) To separate concrete driveways, stairways and their landings from sidewalks as shown on Standard Plans Nos. 105, 106, 107 and 115, respectively.

(3) Around the vertical barrel of fire hydrants, around utility poles and large diameter underground utility cover castings when located in the sidewalk area.

(4) Longitudinally along both sides of cement concrete walks when they cover the entire planting and sidewalk area between solid masonry walls, building walls and pavement curbs.

Where sidewalk construction in blocks between intersections extends across planting strips to the back of pavement curbs, or curb and gutter, the sidewalk concrete edge shall be increased in thickness three (3) inches and premoulded expansion joint material three-eighths (⅜) inch in thickness shall be placed between back of curb and the thickened edge of sidewalk, as shown by Section B–B on Standard Plan No. 114, and Standard Plan No. 114.1 for types of curb and gutter.

No payment will be made for furnishing and placing expansion and contraction joint materials for cement concrete sidewalks. All costs therefor shall be considered incidental to the construction and included in the unit bid contract prices of the proposal for sidewalk.

Payment for extra concrete placed as shown on the standard plan, Section B–B, will be made at the unit contract price for "Thickened Edge for Sidewalk."

Transverse and longitudinal expansion joints as shown on the standard plans shall be three-eighths (⅜) inch thickness premoulded joint material, cut to a width equal to the full depth of the concrete where located, plus one-half (½) inch. When installed, they shall be placed with top edge one-eighth (⅛) inch below the finished surface of the concrete, in a perpendicular plane to the surface, and with the bottom edge embedded in the subgrades. All joints shall be in straight alignment except where placed in curved locations as required by the construction plans.

Contraction joints for sidewalks shall conform to the applicable requirements for expansion joints for placement, except for thickness of joint material being three-sixteenths ($\frac{3}{16}$) inch and width of two (2) inches. The top edge shall be one-eighth (⅛) inch below the finished surface of the sidewalk.

42–4 MEASUREMENT 79

42–5 PAYMENT

Payment will be made for such of the following bid items included in the contract:

(1) "Cement Concrete Sidewalk," per square foot.

(2) "Thickened Edge for Sidewalk," per linear foot.

(3) "4-inch Sidewalk Drain (depth)," per linear foot.

The unit contract prices shall be full compensation for all labor, tools, equipment and material required to perform the work as specified. Any work which is essential to the construction but for which no bid item is included in the proposal, shall be considered as incidental and the costs thereof shall be included in the pay items of the proposal.

Excavation, selected materials and compaction will be measured and paid for in accordance with applicable sections of the specifications only if they are set up among the items in the proposal; otherwise, the work and materials involved shall be considered as incidental to the sidewalk construction and the costs thereof shall be included in the bid items of the proposal.

Section 43—Cement Concrete Combined Sidewalk Curb and Gutter (Not Used)*

43–1 DESCRIPTION (Not used) 79

43–2 MATERIALS (Not used) 79

43–3 CONSTRUCTION DETAILS (Not used) 79

43–3.01 GENERAL (Not used) 79

43–3.02 EXCAVATION AND SUBGRADE (Not used) 79

43–3.03 FORMS AND FINE GRADING (Not used) 79

43–3.04 PLACING AND FINISHING CONCRETE (Not used) 79

43–3.05 DOWELS AND KEYWAYS (Not used) 79

43–3.06 STRIPPING FORMS AND FINISHING (Not used) 79

43–3.07 CURING AND PROTECTION (Not used) 79

43–4 MEASUREMENT (Not used) 79

43–5 PAYMENT (Not used) 79

*This section, as to construction required, is duplicated in Section 40–1.01 and Section 42–3.06.

Section 44—Precast Concrete Traffic Curb, Type 123, Traffic Buttons, and Extruded Traffic Curb (Title changed for City use)

44–1 DESCRIPTION

Precast concrete traffic curb Type 123, as detailed on Standard Plan No. 123; precast traffic buttons Type 125, as detailed on Standard Plan No. 125; and extruded cement concrete traffic curb, as may be detailed on the proposal plans shall be placed in the locations shown on the plans or where directed by the Engineer.

44–2 MATERIALS 80

44–2.01 PRECAST TRAFFIC CURB, TYPE 123, AND TRAFFIC BUTTONS (Title changed for City use)

The cement, aggregates, concrete mix and reinforcing for the subject traffic curb or buttons shall conform to the following requirements.

The cement shall conform to the requirements for either Type I or Type III of the standard specifications for Portland Cement, ASTM Designation C 150.

Aggregates used shall be a granular material uniformly graded up to the maximum size of three-eighths (⅜) inch and shall contain sufficient fine fractions to permit securing the type of surface finish specified hereinafter. The aggregates shall be approved by the City Materials Laboratory before use.

The cement concrete mix shall be composed of not less than one (1) part portland cement to approximately two (2) parts of sand and three and one-fourth (3¼) parts coarse aggregate adjusted to secure proper workability. The Contractor will be allowed to use a different concrete mix if approved by the Engineer, provided that it develops not less than four thousand (4,000) pounds per square inch compressive strength when tested at the age of twenty-eight (28) days.

Reinforcing used shall conform to the requirements of Section 39–2.04.

44–2.02 TRAFFIC BUTTONS, PRECAST CONCRETE AND ALUMINUM COVERED (Title changed for City use)

Traffic buttons, precast cement concrete and aluminum covered, shall conform to Standard Plan No. 125, and the requirements of Section 44–2.01.

44–2.03 EXTRUDED TRAFFIC CURB 80

44–3 CONSTRUCTION DETAILS 80

44–3.01 PRECAST CONCRETE TRAFFIC CURB AND TRAFFIC BUTTONS 80

44–3.01A Manufacture 80

44–3.01A1 Proportioning 80

44–3.01A2 Mixing 80

44–3.01A3 Forms 80

44–3.01A4 Placing Concrete

The concrete shall be consolidated by external vibration, or by other means if approved by the Engineer, so as to produce a dense concrete throughout having a minimum of air bubbles and honey-combing.

Reinforcing steel for traffic buttons shall be placed and maintained in its proper position as shown on Standard Plan No. 125.

Curb or buttons shall not be manufactured in an atmospheric temperature of less than 50° F.

44–3.01A5 Removal of Forms

The curb shall be removed from casting molds or forms in a manner which will result in a finished curb meeting the erquirements of Section 44–3.01A11.

The loosening of the curb or buttons from the molds shall be carefully performed to avoid excessive shock and straining of the curb and buttons. When, if in the opinion of the Engineer, undue shock is required to remove the curb from the molds, the stripping operation shall be deferred until such time as the curb may be removed without breakage.

44–3.01A6 Curing Concrete 80

44–3.01A7 Finish 81

44–3.01A8 Surface Treatment

As soon as the units have been taken out of the curing room the curb shall be placed in a drying room and thoroughly surface dried to a depth of at least one-fourth (¼) inch, and then one coat of an approved water-repellent compound shall be flowed on with a brush.

When the first coat has dried, a second coat of water-repellent compound shall be applied. The water-repellent compound shall be approved by the City Materials Laboratory before it is used.

The water-repellent compound shall be a clean, penetrating type silicone resin base compound containing no filler or other material which will leave a film on the surface of the masonry after it is applied. It shall be of such consistency that it can be readily applied by brush or spray to the masonry at atmospheric temperature down to –20° F.

The average absorption of three test specimens treated with the water-repellent compound, when tested in accordance with the methods used in the materials laboratory, shall not exceed two per cent (2%) after being partially immersed in water for 72 hours immediately after curing.

The average moisture vapor transpiration (breathing) of three test specimens, when tested in accordance with the methods used in the materials laboratory, shall not be less than 50% at seven days.

44–3.01A9 Dimensions and Shape

The curb shall be manufactured according to the dimension and shape shown on the standard plan within a tolerance of ¼" in length and ⅛" in alignment.

44–3.01A10 Curb Lengths 81

44–3.01A11 Defective Curb 81

44–3.01A12 Repairing Curb

Curb having defects which are not sufficient cause for its rejection by the Engineer after removal from the molds or forms shall be repaired immediately, as approved by the Engineer.

44–3.01A13 Identification Marking 81

44–3.01A14 Shipping 81

44–3.01A15 Samples 81

44–3.01A16 Inspection at Plant

Inspection of curbs at the plant may be made by the Engineer any time prior to shipment to check for defects.

44–3.01B Installation of Curbs 82

44–3.01B1 Nosings 82

44–3.01B2 Joints 82

44–3.01B3 Bedding 82

44–3.01B4 Alignment 82

44–3.01B5 Cleaning Pavement 82

44–3.01B6 Sodium Metasilicate 82

44–3.01B7 Layout Design 82

44–3.01C Installation of Buttons 82

44–3.02 EXTRUDED TRAFFIC CURB 82

44–3.02A Joints in Extruded Curb 82

44–4 MEASUREMENT

Type 123A traffic curb (A curb, Standard Plan No. 123) will be measured along the front face of curbs and returns. Type 124C traffic curb (C Curb, Standard Plan No. 123) will be measured along the axis of the curb. Type 123 traffic curb nosing, and dividers (Standard Plan No. 123) will, respectively be measured as for Type 123A and Type 123C.

Precast cement concrete and aluminum covered traffic buttons will, respectively, (Standard Plan No. 125) be measured by "each."

Extruded cement concrete traffic curb as detailed on the plans will be measured by linear feet along the axis of the curb.

44–5 PAYMENT

Payment will be made for such of the following bid items as are included and shown in any particular contract:

(1) "Type 123A Precast Traffic Curb," per linear foot.
(2) "Type 123C Precast Traffic Curb," per linear foot.
(3) "Type 125 Precast Traffic Button," per each.
(4) "Type 125 Aluminum Covered Traffic Button," per each.
(5) "Extruded Cement Concrete Traffic Curb," per linear foot.

The unit contract prices for each of the above bid items shall be full compensation for all costs of labor, tools, materials and incidental work for the complete installation of these items in accordance with the proposal plans and specifications.

Section 45—Block Precast Traffic Curb Type 124 (Title changed for City use)

45–1 DESCRIPTION

Block precast traffic curb shall be constructed at the location shown on the plans and in accordance with the details as shown on Standard Plan No. 124. In construction of the block precast traffic curb, the Contractor shall have the option of using either length of block shown in the standard drawing, provided the same length of block is used throughout the entire project.

45–2 MATERIALS 82

45–3 CONSTRUCTION DETAILS 83

45–3.01 INSTALLATION 83

45–4 MEASUREMENT

Type 124A block type precast traffic curb (Standard Plan No. 124) will be measured by the linear foot along the front face of the curb and returns. Type 124C block type precast traffic curb (Standard Plan No. 124) will be measured by the linear foot along the axis of the curb. Precast nosing pieces and dividers (Standard Plan No. 123) will be measured as for Type 124A and Type 124C traffic curbs, respectively.

45–5 PAYMENT

Payment will be made for such of the following bid items as are shown in any particular contract:

(1) "Type 124A Block Precast Traffic Curb," per linear foot.
(2) "Type 124C Block Precast Traffic Curb," per linear foot.

The unit contract price for each of the above type number block precast traffic curb items shall be full compensation for all labor, tests, materials and incidental work for the complete installation of the curb in accordance with the proposal plans and specifications.

Section 46—Illuminated Terminal Nosing

46–1 DESCRIPTION

The work to be performed consists of furnishing and installing all necessary materials to complete in place the illuminated terminal nosing Type 126 or Type 127 as shown on Standard Plans Nos. 126 and 127, respectively, as may be indicated by the proposal plans and specifications.

Included in the work is the furnishing and placing of the terminal nose castings, lamp box, conduit, pull boxes or junction boxes, as specified herein, in the special provisions, or as shown on the plans.

Unless otherwise noted, the location of the illuminated terminal nosing, pull boxes or junction boxes and conduit shown on the plans are approximate and the exact location will be established by the Engineer in the field.

46–1.01 REGULATIONS AND CODE 83

46–1.02 INDUSTRY CODES AND STANDARDS 83

46–2 MATERIALS 83

46–2.01 GENERAL 83

46–2.02 INSPECTION 83

46–2.03 TERMINAL NOSE CASTING

The casting shall be malleable iron casting, ASTM Designation A 47 or steel casting, ASTM Designation A 27, Grade 60-30.

The lamp box and cover shall be No. 16 gage galvanized sheet metal, or aluminum sheeting of equivalent thickness.

The terminal nose casting, together with the lamp box and fittings, shall be made in accordance with the details therefor shown on Standard Plans Nos. 126 and 127 for the type of nosing specified.

46–2.04 CONDUIT 83

46–2.05 PULL BOXES, JUNCTION BOXES

Metallic pull boxes may be cast iron or welded $\frac{3}{16}$ inch thick or cast aluminum of the sizes noted on the plans. Boxes used shall not be of dissimilar metal to the conduit used in any given electrical system. Boxes shall be watertight with lids securely gasketed to exclude water. Boxes installed underground shall have screened drains installed as detailed on the plans. Cast iron steel boxes shall be hot-dipped galvanized conforming to the applicable portions of ASTM Designation A 153.

Where indicated on the plans, concrete pull boxes shall be used and shall be constructed as detailed on the Standard Plans Nos. 128 and 128.1 and 129, respectively, for the type of pull box or junction box specified. Where concrete pull boxes or junction boxes are to be placed in areas subject to traffic load, a steel or cast iron cover of approved design to withstand such loads shall be used. Such pull boxes or junction boxes shall be installed on a suitable concrete footing to withstand traffic loads. Covers shall be inscribed as specified on the plans.

46–3 CONSTRUCTION DETAILS 84

46–3.01 GENERAL 84

46–3.02 EXCAVATION AND BACKFILLING 84

46–3.03 REMOVING AND REPLACING IMPROVEMENTS 84

46–3.04 CONDUIT 84

46–3.05 LOCATION, PULL AND JUNCTION BOXES (Title changed for City use)

Pull boxes, as required, shall conform to the details shown on Standard Plans Nos. 128 and 128.1, junction boxes to Standard Plan No. 129 and shall be installed at the locations shown on the plans and at such additional points as ordered by the Engineer, when conduit runs are more than 200 feet. The Contractor may install, at his own expense, such additional boxes as may be desired to facilitate the work.

Location of undeground pull boxes shall be marked by the installation of a standard guide post installed on the shoulder adjacent to the pull box, or in the island near the pull box, with the top six inches painted red.

46–4 MEASUREMENT AND PAYMENT 85

Section 47—Erosion Control (New Section)

47–1 DESCRIPTION (New Section)

Erosion control shall consist of preparing slopes, placing and compacting top soil, seeding, fertilizing and mulching all graded and disturbed areas in accordance with these specifications, the details shown on the plans and the special provisions.

47–2 MATERIALS (New Section)

47–2.01 TOP SOIL (New Section)

Top soil material shall conform to the requirements of Section 55–1.02.

47–2.02 SEED (New Section)

Grasses, legumes, or cover crop seed of the type hereinafter specified shall conform to the standards for "Certified" grade seed or better, as outlined by the State of Washington Department of Agriculture "Rules for Seed Certification," latest edition. Seed shall be furnished in standard containers on which shall be shown the following information:

(1) Seed name
(2) Lot number
(3) Net weight
(4) Percentage of purity
(5) Percentage of germination (in cases of legumes percentage of germination to include hard seed)
(6) Percentage of weed seed content and inert material clearly marked for each kind of seed in accordance with applicable State and Federal laws.

Upon request, the Contractor shall furnish to the Engineer duplicate copies of a statement signed by the vendor certifying that each lot of seed has been tested by a recognized seed testing laboratory within six (6) months before the date of delivery on the project. Seed which has become wet, moldy, or otherwise damaged in transit or storage will not be accepted.

Seed mix and rate of application shall be as specified in the special provisions.

47–2.03 FERTILIZER (New Section)

Fertilizer shall be a standard commercial grade of organic or inorganic fertilizer of the kind and quality specified herein. It may be separate or in a mixture containing the perecntage of total nitrogen, available phosphoric acid and water-soluble potash in the amounts specified. All fertilizers shall be furnished in standard unopened containers with weight, name of plant nutrients and manufacturer's guaranteed statement of analysis clearly marked, all in accordance with State and Federal laws.

Acceptable commercial fertilizer may be supplied in one of the following forms:

(1) A dry free-flowing granular fetrilizer, suitable for application by agricultural fertilizer spreader.

(2) A soluble fertilizer ground to a fineness that will permit complete suspension of insoluble particles in water, suitable for application by power sprayer.

(3) A granular or pelleted fertilizer, suitable for application by blower equipment.

(4) A non-volatile liquid fertilizer.

Commercial fertilizer formulation and rate of application shall be as specified in the special provisions.

Rate of application shall be as specified in the special provisions.

47–2.04 MULCH (New Section)

47–2.04A Hay (New Section)

All mulch material shall be in an air dried condition free of noxious weeds, weed seeds and other materials detrimental to plant life. Unless otherwise specified in the special provisions mulch materials shall be hay of approved field grasses indigenous to the area. Hay shall be seasoned before baling or loading and shall be acceptable to the Engineer. Hay mulch so provided shall be suitable for spreading with mulch blower equipment. Rate of application shall be as specified in the special provisions.

47–2.04B Wood Cellulose Fiber (New Section)

Wood cellulose fiber mulch shall be specially processed wood fiber containing no growth or germination inhibiting factors and shall be dyed a suitable color to facilitate inspection of the placement of the material. It shall be manufactured in such a manner that after addition and agitation in slurry tanks with fertilizers, grass seeds, water and other improved additives, the fibers in the material

will become uniformly suspended to form a homogenous slurry. When hydraulically sprayed on the ground, the material shall be uniformly impregnated with grass seed, and which after application, will allow the absorption and percolation of moisture.

Wood cellulose fiber shall be supplied in packages having a gross weight not in excess of 80 pounds. Each package of the cellulose fiber shall be marked by the manufacturer to show the air dry weight conent. All mulch material must be acceptable to the Engineer.

47–2.05 ASPHALT EMULSION (New Section)

Asphalt emulsion used as a tie-down for mulch shall be a standard SS-1 emulsion conforming to the requirements of Section 27–2.01.

47–2.06 JUTE MATTING (New Section)

Hay mulch will not be required where jute matting is specified. Jute matting shall be of a uniform open plain weave of undyed and unbleached single jute yarn. The yarn shall be of a loosely twisted construction and shall not vary in thickness by more than one-half its normal diameter. Jute matting shall be furnished in rolled strips as follows:

Length approximately 50 yards.

Matting width shall be 48 inches with an average weight of 0.92 pounds per square yard. A tolerance of plus or minus one (1) inch in width and 5% in weight will be allowed.

47–3 CONSTRUCTION DETAILS (New Section)

47–3.01 PREPARATION (New Section)

Before the placing of top soil, all soil conditioners shall be applied at the rate as specified in the special provisions. Also all areas shall be cultivated to a depth of two (2) inches unless otherwise specified.

Cultivation of the soil may be done by farm disk, harrow or other suitable equipment approved by the Engineer. This operation shall be done at right angles to the natural flow of water on the slopes unless otherwise ordered by the Engineer. All cost and expense incurred in performing the work herein specified shall be considered incidental to other bid items on the project and no additional compensation will be made.

47–3.02 PLACEMENT OF SOIL (New Section)

Top soil shall be evenly spread over the specified areas to the depth shown on the plans or as otherwise ordered by the Engineer. After the top soil has been spread, all large clods, hard lumps, rocks and litter shall be raked up, removed and disposed of by the Contractor.

Top soil shall not be placed when the ground or top soil is frozen, excessively wet or in the opinion of the Engineer, in a condition detrimental to the work.

All damage occurring to existing roadbeds, shoulders, walks, curbs or other existing adjacent structures or areas due to the Contractor's operations in hauling and placing the top soil shall be repaired by the Contractor at his own cost and expense.

47–3.03 COMPACTION (New Section)

All top soil shall be compacted unless otherwise specified or ordered by the Engineer. Compaction shall be by sheeps-foot roller, cleated crawler tractor or similar equipment approved by the Engineer, which will produce a minimum of 150 pounds per square inch ground pressure to a maximum of 300 pounds per square inch ground pressure. Equipment shall be so designed and constructed to produce a uniform rough textured surface ready for seeding and mulching, and which will bond the top soil to the underlying material. The entire area shall be covered by a minimum of four (4) passes or two round trips of the roller or approved equipment. Compaction equipment shall be operated parallel to the natural flow of water on the slopes unless otherwise ordered by the Engineer. Conveying the roller or approved equipment up and down the slopes shall be by means devised by the Contractor, providing that the required results are obtained to the satisfaction of the Engineer. After compaction, the finished grade of the top soil shall be one (1) inch below the top of all curbs, catch basins and other structures.

If, in the opinion of the Engineer, water is required to condition the top soil for rolling, it shall be immediately furnished and applied by the method and in the amount designated by the Engineer.

47–3.04 SEEDING AND FERTILIZING (New Section)

The Contractor shall notify the Engineer not less than twenty-four hours in advance of any seeding operation and he shall not begin the work until areas prepared or designated for seeding have been approved. Following the Engineer's approval, seeding and fertilizing of the approved slopes shall begin immediately.

Seeding shall not be done during windy weather or when the ground is frozen. Seed and fertilizer shall be placed at the rate and mix specified herein or as directed by the Engineer. Seed and fertilizer may be sown by one of the following methods:

(1) An approved type hydro-seeder which utilizes water as the carying agent, and maintains a continuous agitator action that will keep seed and fertilizer mixed in uniform distribution until pumped from the tank. Pump pressure shall be such as to maintain a continuous, non-fluctuating stream of solution.

(2) Approved blower equipment with an adjustable disseminating device capable of maintaining a constant measured rate of material discharge that will insure an even distribution of seed and fertilizer at the rates herein specified.

(3) Helicopters properly equipped for aerial seeding and fertilizing. Helicopters so equipped shall have the following:
   (a) Two hoppers or seed compartments capable of containing a minimum of 100 pounds each of grass seed, or granular fertilizer.
   (b) Power-driven, readily adjustable disseminating mechanisms capable of maintaining a constant, measured rate of distribution of grass seed, or granular fertilizer.
   (c) Where liquid fertilizer is furnished in lieu of dry granular fertilizer, the helicopter shall be equipped with two barrels or containers capable of containing a minimum of 15 gallons each. Distribution shall be by a spray boom of sufficient size and length, fitted with proper nozzles to distribute uniformly liquid fertilizer as herein specified.

(4) Approved power-drawn drills or seeders.

Areas inaccessible to above methods of application shall be seeded and fertilized by approved hand methods. Distribution of the material shall be uniform and at the rates specified.

It shall be the Contractor's responsibility to provide qualified personnel experienced in all phases of the seeding and fertilizing operation, equipment and methods as herein specified.

47–3.05 SPREADING MULCH (New Section)

47–3.05A Hay (New Section)

Mulch material of the type herein specified shall be furnished, hauled and evenly applied at the rates indicated, and shall be spread on seeded areas within forty-eight (48) hours after seeding unless otherwise specified. Distribution of mulch material shall be by means of an approved type mulch spreader which utilizes forced air to blow mulch material on seeded areas. The spreader shall produce a uniform distribution of the hay, without cutting or breaking it into short stalks. Areas beyond the range of the mulch spreader shall be mulched by approved hand methods. Distribution of the material shall be uniform and at the rate specified.

47–3.05B Wood Cellulose Fiber (New Section)

Wood cellulose fiber utilized as a mulch may be applied with seed and fertilizer in one operation by approved hydraulic equipment. The equipment shall have a built-in agitation system with an operating capacity sufficient to agitate, suspend, and homogenously mix a slurry of the specified amount of fiber, fertilizer, seed and water. Distribution and discharge lines shall be large enough to prevent stoppage and shall be equipped with a set of hydraulic discharge spray nozzles which will provide a uniform distribution of the slurry.

47–3.06 APPLICATION OF ASPHALT EMULSION (New Section)

Mulch material shall be anchored in place with asphalt emulsion as herein specified. Asphalt emulsion shall be sprayed into the mulch as it leaves the blower pipe and shall be uniformly mixed with the mulch. Asphalt emulsion as specified shall be applied at the rate of 100 gallons per acre. Any mulch disturbed or displaced following application shall be removed and reapplied as specified.

47–3.07 PLACING JUTE MATTING (New Section)

Jute matting shall be unrolled parallel to the flow of water immediately following the bringing to finished grade the area specified on the plans or the placing of seed and fertilizer. Where more than one strip is required to cover the given area, they shall overlap a minimum of 4 inches. Ends shall overlap at least 6 inches with the upgrade section on top. The upslope end of each strip of matting shall be buried in 6-inch slots with the soil firmly tamped against it. The Engineer may require that any other edge exposed to more than normal flow of water or strong prevailing winds be buried in a similar manner. Check slots shall be placed between the ends of strips by placing a tight fold of the matting at least 6 inches vertically into the soil. These shall be tamped and stapled the same as upslope ends. Check slots must be spaced so that one check slot or one end occurs within each 50 feet of slope.

Edges of matting shall be buried around the edges of catch basins and other structures as herein described. Matting must be spread evenly and smoothly and in contact with the soil at all points.

Jute matting shall be held in place by approved wire staples, pins, spikes or wooden stakes driven vertically into the soil. Matting shall be fastened at intervals not more than three feet apart in three rows for each strip of matting, with one row along each edge and one row alternately spaced in the middle. All ends of the matting and check slots shall be fastened at six (6) inch intervals across their width. Length of fastening devices shall be sufficient to securely anchor matting against the soil and driven flush with the finished grade.

47–3.08 CONTRACTOR'S RESPONSIBILITY FOR WORK (New Section)

The Contractor shall be responsible for all work herein described in accordance with Section 7 and the following requirements as directed by the Engineer:

(1) Protect all areas involved against vehicle and pedestrian traffic by approved warning signs and barricades.

(2) Reseed and fertilize areas failing to show a uniform stand of grass after germination of seed, or damage through any cause before final inspection.

Maintenance and protection during a suspension of work shall be as herein described and in accordance with Section 8 and as directed by the Engineer.

47–3.09 FINAL INSPECTION AND ACCEPTANCE (New Section)

Acceptance of areas receiving seed, fertilizer and mulch as herein specified shall be based on a uniform stand of grass at the time of final inspection. Areas failing to show uniform stand of grass after germination, or damaged through any cause prior to final inspection shall be reseeded as herein specified at the Contractor's expense.

47–4 MEASUREMENT (New Section)

47–4.01 TOP SOIL (New Section)

Measurement for top soil shall be by the cubic yard in the haul conveyance at the point of delivery.

47–4.02 SEEDING AND FERTILIZING (New Section)

The quantity of seeding and fertilizing to be paid for shall be by ground slope measurement in acres of actual seeding and fertilizing completed and accepted.

47–4.03 MULCHING (New Section)

The quantity of mulching to be paid for shall be by ground slope measurement in acres of actual mulching completed and accepted, including anchoring with asphalt emulsion or by any other means specified, in accordance with these specifications and as shown on the plans.

47–4.04 JUTE MATTING (New Section)

The quantity of jute matting to be paid for shall be by the square yard measurement of surface area covered and accepted in accordance with these special provisions and the plans.

47–4.05 SOIL CONDITIONERS (New Section)

The quantity of soil conditioners to be paid for shall be by the ton. Contractor shall furnish duplicate bills of lading to the Engineer.

47–5 PAYMENT (New Section)

47–5.01 TOP SOIL (New Section)

"Top Soil," including compaction, shall be paid for per cubic yard, which price shall include the furnishing of all materials, labor, equipment and all items required to complete the work as specified.

47–5.02 SEED AND FERTILIZER (New Section)

Payment for seeding and fertilizing will be made at the unit contract price per acre for "Seeding and Fertilizing," which price shall include the furnishing of all materials, labor, equipment and all items required to complete the work as specified.

47–5.03 MULCHING (New Section)

Payment for mulching will be made at the unit contract price per acre for "Mulching," which price shall include the furnishing of all materials, labor, equipment and all items required to complete the work as specified.

47–5.04 JUTE MATTING (New Section)

Payment for jute matting will be made at the unit contract price per square yard of surface area covered by "Jute Matting," which price shall include the furnishing of all materials, labor, equipment and all items required to complete the work as specified.

47–5.05 WATER (New Section)

Water, unless otherwise provided in the special provisions, will be paid for by the improvement, in accordance with Section 5.13.

47–5.06 SOIL CONDITIONERS (New Section)

Payment for soil conditioners will be made at the unit contract price per ton for "Soil Conditioners," which price shall include the furnishing of all material, labor, equipment and all items required to complete the work as specified.

Section 48—Roadside Planting (New Section)

48–1 DESCRIPTION (New Section)

Where shown on the plans, trees, shrubs and ground covers shall be furnished and planted by the Contractor in accordance with accepted horticultural practice, these specifications and as directed by the Engineer. Trees, shrubs and ground covers will hereinafter be referred to collectively as "plants" or "plant material."

48–2 MATERIALS (New Section)

48–2.01 NOMENCLATURE (New Section)

Nomenclature for plant names and varieties shall be in accordance with the latest edition of "Standardized Plant Names" as prepared by the American Joint Committe on Horticultural Nomenclature.

48–2.02 QUALITY OF PLANT MATERIAL (New Section)

All plant material furnished shall conform to the applicable requirements described in the current issue of "American Standard for Nursery Stock," and in addition thereto shall meet the following requirements:

(a) All plant material shall comply with State and Federal laws with the respect to inspection for plant diseases and insect infestation. Inspection certificates required by law shall accompany each shipment of plant material and shall be filed with the Engineer. All plant material specified shall be first-class representatives of their normal species or varieties in healthy growing condition with normal well developed branch system and vigorous root sytems. They shall be free from disease and insect infestation, disfiguring knots, sun-scalds, abrasions of the bark, broken tops, torn roots and any other objectionable features. Plants cut back from large sizes to meet specified sizes will not be accepted. All plants shall be nursery grown stock unless otherwise specified.

(b) Plants shall have not cuts over ¾-inch diameter which has not completely healed over. Leader shall be intact on all plants.

(c) Ground plants furnished in pots or other containers shall be acclimated to outside conditions and equal to field grown stock.

(d) When so specified, collected plant material shall conform in quality, size and grade as for nursery grown stock, except that roots and ball shall be 1/3 greater in diameter than required of nursery grown stock.

48–2.03 HANDLING AND SHIPPING (New Section)

All plants shall be dug with care by experienced workmen immediately before shipment. Plants shall be packed for shipment according to standard practice for the type of plant being shipped. The root system of all plants shall not be permitted to dry out at any time. Plants shall be protected at all times against heat and freezing temperatures, sun, wind, climatic or seasonal conditions during transit. When transported a considerable distance in closed vehicles, plants shall receive adequate ventilation to prevent "sweating." In open vehicles, plants are to be protected by tarpaulins or other suitable cover material. All deciduous plant material shall be furnished bare root (BR) unless otherwise specified. All evergreen plant material shall be furnished balled and burlapped (B&B) unless otherwise specified. Broken or "made" balls will not be accepted. All balled and burlapped plants shall at all times be handled by the ball of earth and not the plant. Unless otherwise specified, all plants may be supplied in suitable metal or other containers should the Contractor so desire. Container grown plants shall be well developed to hold the earth intact after removal from the container without being root bound.

48–2.04 TAGGING PLANT MATERIAL (New Section)

Plants delivered shall have legible labels attached to each individual plant delivered as a separate unit or to each box, bundle, bale or container containing one or more plants. Labels shall give the necessary detailed information as to horticultural name, size, age, caliber or other data rtquired to identify as conforming to specifications. When the label is attached to a bundle, box, container, etc. containing more than one plant, information on the label shall show the quantity together with the other required information.

48–2.05 INSPECTION OF PLANT MATERIAL (New Section)

The Contractor shall, as soon as practical, inform the Engineer as to the source of plant materials for the project. All plants intended for use by the Contractor are subject to inspection at any time by the Engineer. Approval of plant material for a project shall not be considered as final acceptance. The Contractor shall notify the Engineer not less than two (2) days in advance of delivery of plants from the nursery.

All plants will be inspected by the Engineer on arrival at the project and before the time of planting. Root condition of plants furnished in containers shall be determined by removal of the plant from the container. Plants not meeting the requirements herein specified shall be immediately removed from the project and replaced by the Contractor at his own expense.

48–2.06 SUBSTITUTION OF PLANTS (New Section)

No substitution of plant material will be permitted unless evidence is submitted in writing to the Engineer that a specified plant cannot be obtained and has been unobtainable since the award of the contract. If substitution is permitted, it can be made only with written approval by the Engineer. The nearest variety, size and grade as approved by the Engineer shall then be furnished.

48–2.07 TEMPORARY STORAGE (New Section)

Plant material delivered and accepted shall be planted immediately. Plants that cannot be planted within one day after arrival shall be "heeled-in" in accordance with accepted horticultural practice.

(a) Bare root plants shall be placed in trenches with roots covered with moist earth or other suitable material. All bare root material supplied in bundles shall have the bundle broken and be placed in the trenches separately.

(b) Balled and burlapped plants shall have the root ball protected by moist earth, sawdust or other acceptable material.

Plants stored under temporary conditions shall be protected at all times from extreme weather conditions, and shall be kept moist. All plants that must be stored longer than one month shall be planted in nursery rows and maintained by the Contractor at his own expense.

48–2.08 TOP SOIL (New Section)

Top soil material shall conform to the requirements of Section 55, including any soil conditioners specified in the special provisions.

48–3 CONSTRUCTION DETAILS (New Section)

48–3.01 LAYOUT OF PLANTING (New Section)

Plant locations and outline of planting areas shall be staked by the Contractor and approved by the Engineer before the planting of any trees, shrubs or ground covers.

48–3.02 ORDER OF PLANTING (New Section)

In mixed planting areas trees shall be planted first, followed by the larger shrubs, low shrubs and the final planting of ground covers.

48–3.03 PLANTING (New Section)

Plants shall not be placed in any areas that are below the finished grade as shown on plans or as directed by the Engineer. Planting areas which, in the opinion of the Engineer, require cultivating shall be cultivated to a depth of six (6) inches and all rocks, sticks, roots and other debris shall be removed before any plants are planted. In addition thereto all planting shall be performed in accordance with the following requirements:

(a) Planting shall not be done during freezing weather or when conditions are unfavorable to the work.

(b) Plant locations shall be established, approved and holes dug before moving the plants out to the planting area.

(c) Plants shall be protected at all times to prevent roots from drying out during the planting operation.

(d) Holes shall be dug for trees, 24 inches greater in diameter than the diameter of the root ball or natural spread of the roots. Depth of hole shall provide a minimum backfill under roots or root ball of 12 inches. Shrub holes shall be 12 inches greater in diameter than the root ball or natural spread of the roots. Depth of shrub holes shall allow for a minimum backfill under roots or balls of 6 inches. Ground covers shall have a minimum backfill on all sides of the root system of 2 inches.

(e) Planting shall be done by experienced workmen in accordance with recognized horticultural practice. All plants shall be set plumb and at such an elevation that after backfill settlement plants will bear the same relationship to the finished grade as they were planted in the nursery.

(f) Bare root plants shall be set in the plant holes with roots spread out in a natural position. Backfill material as specified shall then be worked in and around the roots filling all voids. Firming or tamping of backfill material around roots shall be done in such a manner so as not to damage the roots. Balled and burlapped material shall have all strings or cords cut, and the burlap shall be laid back from the top half of the ball. This shall be done only after the plant is placed in its final position and before completion of the backfill. Plants supplied in containers shall be removed from the containers in such a manner as to prevent disturbance of the root system or material in which they were planted. Under no circumstances shall the plant be removed from the container by pulling on the main stem. Plants removed from their containers shall be planted without delay, in the manner described for balled and burlapped plants. A shallow rain basin consisting of a ridge of earth 1 to 3 inches high and equal in diameter to the planting hole, shall be left around each plant. Immediately after a plant is planted and basin constructed, the basin shall be filled with water.

(g) All excess or unsuitable material excavated from plant holes shall be removed and disposed of off the project site and to the satisfaction of the Engineer.

48–3.04 PRUNING, STAKING AND GUYING (New Section)

Before planting, all bare root stock shall have damaged or torn roots removed with a clean cut. After planting, all plant material shall be pruned in conformance with the best horticultural practice, appropriate to the type of plant. Top pruning shall remove all damaged twigs and branches, and compensate for loss of roots during planting operation. Top growth removal to compensate for root loss shall not exceed 1/3 of the top growth unless otherwise specified or directed by the Engineer. Removal of top growth shall be in such a manner as to retain the natural growth characteristics of the plant. Cuts greater than ¾ inch in diameter shall be treated with an approved tree wound dressing. Pruning shall produce a clean cut without bruising or tearing the bark and shall be in living wood where the wound can heal over properly.

All deciduous trees over 6 feet in height shall be staked at time of planting unless otherwise specified. Trees 6 feet to 8 feet in height shall be staked with one 2" x 8' stake, stained dark green. The stake shall be placed in the plant hole and driven a minimum of one foot into firm ground at the time of planting, before backfilling around roots. Trees shall be placed not less than 4 inches nor more than 6 inches from the stake. The tree shall be fastened to the stage at a point approximately 3/5 the tree height by use of 12 gauge wire. Where the wire makes contact with the main stem of the tree, the wire shall be placed in a short length of garden hose to protect the bark. Deciduous trees from 8 feet to 12 feet in height shall be staked in a similar manner except two stakes shall be used, one on either side and fastened securely to the tree. Deciduous trees over 12 feet in height and all evergreen shrubs or trees over 4 feet in height shall be guyed with 3 guy wires or cables. Guy wires shall be two strands of 12 gauge wire twisted, passed through a loop of garden hose at a point approximately 3/5 the height of the tree and fastened securely to a stake or deadman placed approximately ¾ the fastening height from the trunk or main stem. Guy stakes or deadmen should be placed equal distances apart.

48–3.05 CULTIVATION AND CLEANUP (New Section)

Upon completion of planting all excess material shall be removed and disposed of off the project site or as directed by the Engineer. Planting areas shall be brought to a uniform grade 1 inch below walks, curbs, pavements and driveways. The soil surrounding each individual plant shall be cultivated and loosened to a depth of 3 inches and all rocks, grass, weeds, hard clods, and other debris shall be removed. An area 3 feet in diameter around each individually planted tree or shrub shall be cultivated as specified and an area not less than 1 foot around small shrubs and ground covers. Where trees and shrubs are planted in groups or mass plantings the total area shall be treated as a unit and cultivated as specified. Planted areas shall be neatly edged with a sharp edging tool.

48–3.06 FERTILIZERS AND SOIL CONDITIONERS (New Section)

Fertilizers and soil conditioners when called for in the special provisions shall be thoroughly and uniformly incorporated into the top soil at the rates specified and as directed by the Engineer.

48–3.07 SAWDUST MULCH (New Section)

Mulch shall be applied where shown on plans or where directed by the Engineer. Planting areas of trees, shrubs and ground covers shall be mulched with hardwood or softwood sawdust to the depth shown. Sawdust shall be free of chips, chunks and large splinters and shall not contain resin, tannin or other compounds in quantities that would be detrimental to plant life.

48–3.08 CARE DURING CONSTRUCTION (New Section)

The Contractor shall insure adequate and proper care of all plant material and work done on this project until the contract is completed and accepted by the City. Adequate and proper care shall consist of keeping all plant material in a healthy, growing condition by watering, cultivating, pruning, spraying and any other necessary operations. This work shall also include keeping the planted areas free from insect infestation, weeds and grass, litter and other debris along with retaining the finished grades in a neat uniform condition.

48–3.09 PROTECTION OF EXISTING FACILITIES (New Section)

Any existing buildings, equipment, piping, pipe covering, sprinkling systems, sewers, sidewalks, landscaping, utilities, roadways or any other improvement or facilities damaged due to the Contractor's operations shall be repaired and/or replaced by the Contractor at his own expense as directed by the Engineer.

48–3.10 REPLACEMENT (New Section)

All plants not in a healthy, growing condition at the time of final inspection shall be removed and replaced in species, size and grade by the Contractor at his own expense.

48–5 MEASUREMENT AND PAYMENT (New Section)

Payment will be made for such of the following bid items as are included and shown in any particular contract:

1. "Trees," per each.
2. "Shrubs," per each.
3. "Ground Cover Plants," per each.
4. "Top Soil," per cubic yard.
5. "Sawdust Mulch," per cubic yard.

The price per each for "Trees," "Shrubs"' and "Ground Cover Plants" shall be full compensation for all costs necessary to furnish, plant, fertilize and cultivate the particular items called for on the plans.

The price per cubic yard for "Top Soil" or for "Sawdust Mulch," measured in the hauling conveyance at the point of delivery, shall be full compensation for all costs necessary to furnish and place the Top Soil and Sawdust Mulch as shown on the plans.

Any incidental work required to complete the roadside planting specified herein but not specifically mentioned in these specifications shall be considered as incidental to the roadside planting and all costs therefor shall be included in the unit contract prices of the bid items.

Section 49—Sprinkler Irrigation System (New Section)

49–1 DESCRIPTION (New Section)

The work under this section shall consist of furnishing all materials and labor required to install a sprinkler irrigation system in accordance with these specifications and the details shown on the plans.

49–2 MATERIALS (New Section)

All materials and equipment incorporated in the sprinkler system shall be new, undamaged, of standard quality and shall be subject to testing as specified herein. Materials shall meet the following requirements.

49–2.01 PIPE AND FITTINGS (New Section)

Galvanized Pipe:

Galvanized pipe shall be standard weight, hot-dipped galvanized iron or steel pipe, threaded and coupled. Pipe shall meet the current requirements of ASTM Designation A 120, and shall be furnished in standard lengths. All pipe fittings shall be standard threaded galvanized malleable iron fittings.

Plastic Pipe:

P.V.C. plastic pipe shall be extruded from unplasticized virgin resins of polyvinyl chloride material, grey in color. The material is the non-toxic, free from taste and odor and conform to Commercial Standard No. CS 207-60, as published by the U. S. Department of Commerce, February 15, 1960. All plastic pipe fittings shall be of the same manufacture as the plastic pipe specified above.

Pipe type and size shall be as specified on plans.

49–2.02 CONTROL TUBING (New Section)

Control tubing shall be copper refrigerator tubing meeting the current requirements of ASTM Designation B 280 or polyvinyl chloride refrigeration tubing. Tubing and fittings shall be capable of withstanding a 300 p.s.i. operating pressure and shall be of the size indicated on the plans.

49–2.03 AUTOMATIC CONTROLLERS (New Section)

When called for on the plans, the Contractor shall furnish and install on a concrete base, automatic controllers as herein specified. They shall be an electrically timed device for automatically opening and closing control valves for predetermined periods of time and mounted so that all normal adjustments will be conveniently located for use by the operator. Controllers shall be enclosed in a weather-proof metal housing with hasp and lock or locking device. All locks or locking devices shall be master keyed and three (3) sets of keys provided. Operating features shall include the following:

(a) Each valve in the circuit shall be adjustable for setting to remain open for any desired period of time—from 5 minutes or less to at least one hour.

(b) Controller adjustments shall be such that the open cycle may be halved, doubled or repeated not less than three times during the complete watering cycle.

(c) Adjustments shall be provided whereby any number of days may be omitted and whereby any one or more positions on the controller can be skipped. When adjustments are made they shall continue automatically within a 14-day cycle until the operator desires to make new adjustments.

(d) Controls shall allow any position to be operated manually both on or off whenever desired.

(e) Controls shall provide for resetting the start of the irrigation cycle at any time and advancing from one position to another.

(f) Controllers shall contain an "on-off" switch and fuse assembly.

(g) Controller shall have a power failure cutout.

49–2.04 SPRINKLER HEADS (New Section)

Sprinkler heads shall be of the type, pattern and coverage shown on the plans. All heads shall be constructed of heavy duty bronze, brass or stainless steel. Where rotary type heads are specified on plans they shall be turbine driven with hardened bronze cams with the speed of rotation adjustable. Sprinklers shall be designed so that spray adjustments can be made by either an adjustment screw or interchangeable nozzles. Watering cores shall be precision machined for accurate performance and shall be easily removed without removing the housing from the pipe. All turf heads shall be designed with turf flanges having two gripping holes or slots to facilitate removal of the head.

49–2.05 VALVE PROTECTIVE SLEEVES (New Section)

All valves shall be equipped with a protective sleeve and cap as shown on the plans. Protective sleeves shall be plain concrete pipe of the size and length called for on the plans.

49–2.06 GATE VALVES (New Section)

Gate valves when called for on the plans shall be heavy duty bronze conforming to the requirements of ASTM Designation B 62. Valves shall be of the same size as the pipes on which they are placed and shall have union or flange connections. Service rating (for non-shock cold water) shall be 300 p.s.i. Valves shall be of the double disk, taper seat type, with rising stem, union bonnet and handwheel. Manufacturer's name, type of valve and size shall be cast on the valve.

49–2.07 CONTROL VALVES (New Section)

Manual section control valves shall be bronze angle valves, renewable disk type with rising stem and either screwed or union bonnet, fitted for key operation. Service rating shall be not less than 150 p.s.i. non-shock cold water.

Automatic remote control valves shall be brass or bronze, patern as specified with flanged or screwed outlet. Screwed valves shall be provided with union connections or a short brass nipple with brass union. Valves shall be a "normally closed" design and shall be opened and closed as required by the automatic controller. Valves shall be designed to have a manual adjustment from fully closed to wide open. Once the manual adjustment is set, the valve shall operate automatically in the adjusted position. Water flow shall be completely stopped when the control valve is closed either manually or automatically. Automatic remote control valves and automatic controllers shall be of the same manufacturer.

49–2.08 QUICK COUPLER VALVES (New Section)

Quick coupler valves shall have a service rating not less than 150 p.s.i. for non-shock cold water. Body of the valves shall be a single brass alloy #5-A as given in ASTM Designation B 145. Base of the valve shall be such that it will open only upon inserting a coupler device, and will close as the coupler is removed from the valve. Leakage of water between the coupler and valve body when in operation will not be accepted. The valve body receiving the coupler shall be designed with double worm slots to allow smooth action in opening and closing of the valve with a minimum of effort. Slots shall be notched at the base to hold the coupler firmly in the open position. Couplers shall be of the same material as the valve body with stainless steel double guide lugs to fit the worm slots. Couplers shall be of one piece construction with steel reinforced side handle attached. All couplers shall have standard male pipe threads at the top. Couplers shall be furnished with all quick coupler valves, unless otherwise specified.

49–2.09 DRAIN VALVES (New Section)

Drain valves shall be bronze or brass stop cocks with a service rating of 125 p.s.i. Design shall be flathead with checks. The Contractor shall furnish a suitable operating key. Each drain valve shall be placed in a drain pit which shall be constructed in accordance with the details on the plans.

49–2.10 HOSE BIBS (New Section)

Hose bibs shall be constructed of bronze or brass, angle type threaded to accommodate a ¾-inch hose connection and shall be key operated. Design shall be such as to prevent operation by wrench or pliers.

49–2.11 VACUUM BREAKERS (New Section)

When called for in the plans and special provisions, vacuum breakers meeting the following requirements shall be furnished and installed. All vacuum breaker installations are subject to inspection by authorized City authorities.

49–2.11A Atmospheric Vacuum Breakers (New Section)

Atmospheric vacuum breakers shall have all bronze bodies and be of the same dimension as the pipe on which it is attached. Design shall permit free flow of water under pressure. When vacuum conditions exist it shall automatically close the check valve stopping all flow of water and admit air into the main line. Upon restoration of water pressure the air intake shall be shut off and the check valve reopened without spillage. Unless otherwise specified, the vacuum breaker shall be installed on the discharge side of the control valve six inches above the highest sprinkler head on the line. Vacuum breakers shall not be required on sprinkler line when all sprinkler heads on the line are elevated a minimum of six inches above the finished grade, such as sprinkler lines irrigating shrub beds. Atmospheric vacuum breakers shall have a service rating of 150 p.s.i for non-shock cold water and shall be designed for operation up to temperatures of 140° F.

49–2.11B Pressure Vacuum Breakers (New Section)

Pressure type vacuum breakers shall be installed on the discharge side of the meter or service connection as shown on the plans. Vacuum breakers shall be of heavy duty construction with all bronze bodies, check valves and test cocks. Pressure type vacuum breakers shall be designed to operate under continuous pressure permitting the free flow of water at all times. Air intake shall be spring loaded to insure positive opening upon release of pressure or vacuum created in the supply lines. Vacuum breakers shall be furnished with approved check valves, inlet and discharge shut-off valves and field testing cocks. Assembly for various pipe sizes shall be as specified on plans and in the special provisions. Unless otherwise specified, pressure type vacuum breakers shall have a service rating of 300 p.s.i for non-shock cold water.

49–3 CONSTRUCTION DETAILS (New Section)

The Contractor shall not alter or change the location of pipes, valves, sprinklers or other equipment as shown on the plans unless so authorized by the Engineer. The City will furnish meters in the locations as noted on the plans.

49–3.01 EXCAVATION (New Section)

Pipe trenches shall be no wider at any point than is necessary to lay the pipe or install equipment. The top six (6) inches of top soil, when such exists, shall be kept separate from subsoil and shall be replaced as the top layer when backfill is made. Trenches shall be excavated with vertical sides and provided with bracing and shoring to be placed as directed by the Engineer. Trenches in rock or like material shall be excavated six (6) inches below the required depth and shall be backfilled to required depth with sand or other suitable material free from rocks or stones.

49–3.02 EXCAVATION ADJACENT TO TREES (New Section)

Care shall be exercised by the Contractor when excavating trenches near existing trees. Where roots are 2 inches and greater in diameter, except in the direct path of the pipe, the pipe trench shall be hand excavated and tunneled. When large roots are exposed they shall be wrapped with heavy burlap for protection and to prevent excessive drying. Trenches dug by machines adjacent to trees having roots 2 inches and less in diameter shall have the sides hand trimmed making a clean cut of the roots. All roots ½-inch or greater in diameter that are cut and trimmed shall be treated with an approved tree wound dressing. Trenches having exposed tree roots shall be backfilled within 24 hours unless adequately protected by moist burlap or canvas, as directed by the Engineer.

49–3.03 PIPING (New Section)

All live main lines shall be a minimum of 24 inches below finished grade measured from the top of the pipe. Lateral or section lines shall be a minimum of 10 inches below finished grade measured from the top of the pipe. Pipes shall be sloped to drain without sags. Unless otherwise specified, drain valves shall be placed only at the low point of all lateral or section lines. All live mains located under existing pavement shall be placed in conduits jacked under pavement unless otherwise noted on the plans or directed by the Engineer. Conduits shall be no larger than necessary to conveniently accommodate the pipe and fittings. Where necessary, live mains and control tubing may be placing in separate conduits laid adjacent and parallel. All jacking operations shall be performed as directed by the Engineer and conduit run at a depth below the pavement as may be so ordered. Where possible, mains and laterals or section piping shall be placed in the same trench.

49–3.04 JOINTING (New Section)

All galvanized steel pipe shall have sound, clean cut standard pipe threads well fitted. All pipes shall be well reamed to the full diameter and burrs removed before assembly. Threaded joints shall be made up with the best quality pure lead paste, applied smoothly and evenly to the male thread only. All screwed joints shall be made tight with tongs and wrenches without the use of handle extensions. Any joints that leak shall be cleaned and remade with new material. Caulking or thread cement to make joints tight will not be permitted.

49–3.05 CONTROL TUBING (New Section)

Copper control tubing shall be joined with brass or bronze screwed compression type fittings. Ends of tubing to be joined shall be uniformly cut, burred and flanged. Directional changes requiring less than a 3-inch radius shall be made with 90° ell fittings.

49–3.06 INSTALLATION (New Section)

Location of pipe, sprinkler heads, valves and other equipment shall be as shown on the plans and shall be of the size and type indicated. No changes shall be made except as approved by the Engineer. Sprinkler heads located within lawn areas shall be installed on temporary high risers approximately 12 inches above finished grade. Once turf has been established the Contractor shall, upon written notice from the Engineer lower the head to final position as a part of the contract. Lowering of sprinkler heads shall be completed within 30 days after receipt of written notice. Final position of turf heads shall be between ½ and 1 inch above finished grade measured from the top of the sprinkler. All sprinklers adjacent to walks, curbs and pavement shall be placed at the same elevation and 6 inches from such structure. Elevation shall be taken from the top of the sprinkler head, walks, curbs or pavement. Shrub heads, unless otherwise specified, shall be placed on high risers elevating them approximately 12 inches above finished grade. Lowering of shrub heads will not be required.

49–3.07 CONTROL TUBING INSTALLATION (New Section)

Control tubing shall be placed with the main supply line. Tubing shall be bundled together by 4 wraps of friction tape at 6-foot intervals. Location of the bundle of control tubing shall be to one side of the pipe, and a minimum of two (2) inches from any galvanized pipe.

49–3.08 FLUSHING AND TESTING (New Section)

All main supply lines shall be flushed completely of foreign particles before placing section control valves, quick-coupler valves and hose bibs. After flushing and when valves are in place, all main supply lines shall be tested at one hundred and fifty (150) p.s.i with valves closed. Pressure shall be maintained for a period of two hours. All joints showing leaks shall be cleaned, remade and tested.

After installation of section lines, the piping shall be completely flushed or foreign particles before attaching sprinkler heads and drain valves. After flushing, section lines shall be tested with risers capped and drain valves

closed. The test shall be made at maximum operating pressure for a period of one hour. Any pipe, fittings or joints showing leaks will not be accepted. All joints showing leaks shall be cleaned, remade and tested. Control tubing shall be tested in the manner specified hereinbefore for th main supply lines. Tubing shall be flushed for five minutes before connection with the control valves.

Automatic controllers shall be tested by actual operation for a period of two weeks under normal operating conditions. Should adjustments be required, the Contractor shall do so according to manufacturer's direction and test until operation is satisfactory.

49–3.09 ADJUSTING SYSTEM (New Section)

Before final inspection the Contractor shall adjust and balance all sprinklers to provide adequate and uniform coverage. Spray patterns shall be balanced by adjusting individual sprinkler heads with the adjustment screws or replacing nozzles to produce a uniform pattern. Unless otherwise specified, sprinkler spray patterns will not be permitted on pavement, walks or structures.

49–3.10 BACKFILL (New Section)

Backfill shall not be started until all piping has been inspected, tested and approved by the Engineer, after which, backfilling shall be completed as soon as possible. Upon completion of all piping in the same trench, backfill shall be completed as specified. Trenches containing control tubing shall have a 3-inch sand or sandy loam cushion free from rocks or stones larges than ⅜-inch in diameter placed over all control tubing. Backfill from the bottom of the trench to approximately 6 inches above the pipe shall be by continuous tamping in such a manner that will not damage pipe or control tubing and shall proceed evenly on both sides of the pipe. The remainder of the backfill shall be thoroughly tamped, except that heavy equipment shall not be used within 18 inches of any pipe. All backfill material shall be free of rocks, roots or other objectionable material. The top 6 inches of the backfill shall be of top soil material or the first 6 inches of material removed in the excavation.

49–5 MEASURE AND PAYMENT (New Section)

Payment will be made for such of the following bid items as are included and shown in any particular contract:

"Manual Sprinkler Irrigation System Complete," lump sum.

"Automatic Sprinkler Irrigation System Complete," lump sum.

The lump sum contract prices for "Manual Sprinkler Irrigation System Complete" and/or "Automatic Sprinkler Irrigation System Complete" shall be full compensation for furnishing all labor, materials, tools and equipment necessary or incidental to the construction of the complete sprinkler system as shown on the plans.

All additional material and labor, not shown on the plans or called for herein, and which are required to complete the sprinkler system, shall be considered as incidental to the construction and be included in the lump sum contract prices. No aditdional compensation will be allowed.

Section 50—Monuments

50–1 DESCRIPTION

This work consists of the resetting of survey monuments, cast iron frames and covers which during construction will be covered over, damaged or otherwise rendered useless. The work may consist of constructing monuments, adjusting monuments to proper grade, and the furnishing and placing of materials and other related work in accordance with the standard drawings Nos. 19 to 23, inclusive, or Standard Plan No. 118, whichever applies.

50–2 MATERIALS 85
50–3 CONSTRUCTION DETAILS 85
50–3.01 REFERENCE POINTS 85
50–3.02 PRECAST CONCRETE MONUMENTS 85
50–3.03 POURED MONUMENT 85
50–3.04 MONUMENTS ON CEMENT CONCRETE PAVING PROJECTS 85
50–3.05 FURNISHING AND PLACING MONUMENTS CASTINGS 85
50–3.06 ADJUSTMENT OF EXISTING MONUMENT CASTINGS TO GRADE 85
50–4 MEASUREMENT AND PAYMENT 86

Section 51—Sidewalk Drain for Building Downspout (Not Used)

51–1 DESCRIPTION (Not used) 86
51–2 MATERIALS (Not used) 86
51–3 CONSTRUCTION DETAILS (Not used) 86
51–3.01 GENERAL (Not used) 86
51–4 MEASUREMENT AND PAYMENT (Not used) 86
51–4.01 MEASUREMENT (Not used) 86
51–5 PAYMENT (Not used) 86

Section 52—Removal of Existing Street Improvements

52–1 DESCRIPTION 86
52–2 CONSTRUCTION DETAILS 86

52–2.01 GENERAL

The removal of street improvement shall be conducted in such a manner as not to injure utilities and any portion of the improvement that is to remain in place. Any deviation in this matter will obligate the Contractor at his own expense, to repair, replace or otherwise make proper restoration equal to or better than original.

When sawing of concrete or combinations or rigid materials is called for in the plans or in the special provisions, the Contractor will be paid therefor at the unit contract price for the quantity involved. The depth of cut shall be such as will accomplish the intended purpose and will be determined in the field by the Engineer.

Whenever the sawing will be performed by forces in the City, it will be so noted in the special provisions; otherwise, the Contractor shall perform the sawing.

52–2.02 REMOVAL OF CURBS

Existing curbs of the several types hereinafter identified shall be removed where shown on the plans, or where encountered in the project work and designated by the Engineer, in accordance with these specifications.

52.2.02A Cement Concrete Curbs, Types A, B and C (New Section)

Cement concrete curbs are classified for type as shown on Standard Plans Nos. 108, 109, 110 and 11, respectively and, when removal is required, shall be identified accordingly for payment; except that when type C integral curbs are removed in conjunction with cement concrete pavement removal, they shall be considered as incidental to the pavement removal work. No separate payment therefor will be made except that measurement for pavement removal will be made to back of the curb. Removal of type C integral curbs from the pavement slab, when required, shall be carefully controlled by first sawing the pavement slab longitudinally along the front face line of the curb, either before or after breaking down the top portion of the integral curb above the pavement slab, to a minimum depth of two (2) inches.

When type B curbs (curb and gutter) are to be removed, and such type B curb is a combination of cement concrete curb and base section in combination with the gutter portion being surfaced with brick or other rigid materials, it shall be removed entirely as though constructed wholly of a portland cement concrete mixture.

Where monolithic curb, type A, is to be removed, they may either be all cement concrete or granite block curb sections; in either case they shall be considered as type A cement concrete curb and removed entirely, including any cement concrete blocking that may have been placed when setting granite curb sections.

52–2.02B Other Types of Curbs (New Section)

Precast cement concrete curbs and curbs or other materials, either of precast or extruded construction, as identified eleswhere in these specifications, which are to be removed, will be further identified on the plans and in the proposal if payment therefor is contemplated; otherwise, the second paragraph of Section 52–1 will apply.

52–2.03 REMOVAL OF PAVEMENT

Removal of existing pavement, i.e., bituminous mixes as a surfacing upon earth or granular subgrades averaging four (4) inches and less in thickness, when required, shall be removed as unclassified excavation, except as may otherwise be provided in the special provisions.

Where removal of existing permanent type pavements, as defined in Section 1.30 and constructed in accordance with Standard Plans Nos. 102, 102.1 and 103, including driveway pavements as described in Section 41 is required, the Contractor shall remove such pavements relative to their original construction and thickness, as classified in the following paragraphs.

In the event pavement removed, as to class as hereinafter classified, averages more than the maximum thickness specified therefor, it shall be removed and additional payment for the amount of extra thickness removed in square yards will be made as provided for extra work in Section 9.03.

52–2.03A Classification of Existing Pavement Removal (New Section)

52–2.03A1 Pavement Removal, Class A, (New Section)

Class A pavement removal shall apply to all unreinforced cement concrete pavement removed having an average thickness of not less than five (5) nor more than ten (10) inches.

52–2.03A2 Pavement Removal, Class AA (New Section)

Class AA pavement removal shall apply to the removal of all cement concrete pavement removed that is reinforced, uniformly spaced longitudinal and transverse reinforcing steel bars or steel wire mesh, the thickness of which averages not less than four (4) inches nor more than ten (10) inches.

52–2.03A3 Pavement Removal, Class B (New Section)

Class B pavement removal shall apply to removal of all pavements constructed with a cement concrete base upon which is placed asphalt concrete as a wearing surface, including asphalt concrete resurfacing of a cement concrete pavement, Class A above; having a combined total thickness which averages not less than seven (7) nor more than twelve (12) inches.

52–2.03A4 Pavement Removal, Class C (New Section)

Class C pavement removal shall apply to removal of early type pavements constructed with a cement concrete base upon which brick or cobblestone on a sand cushion and set in grout, is the top wearing surface; for such pavement where the brick or cobblestone surfacing has subsequently been supplemented by an additional surfacing of asphalt concrete; the average total combined thickness of which is not less than ten (10) nor more than sixteen (16) inches.

52–2.03A5 Pavement Removal, Class D (New Section)

Class D pavement removal shall apply to the removal of a permanent type pavement constructed to standard cross section with crushed rock as a base that is not less than six (6) inches in depth and is surfaced with a thickness of asphalt concrete, the minimum thickness of which shall not be less than two (2) inches.

52–2.04 REMOVAL OF CEMENT CONCRETE SIDEWALKS 87

52–2.05 REMOVAL OF CURB AND GUTTER

Curb and gutter (Type B curbs) shall be removed as specified in Section 52–2.02A, second paragraph.

Where pavement is being removed for the full roadway width, and such pavement removal includes the removal of type B curbs abutting pavement, the removal and disposal of the type B curb shall be considered as incidental to the pavement removal and the measurement for payment of the pavement removal will be made to the back face of the type B curb.

52–2.06 REMOVAL OF ASPHALT CONCRETE PAVEMENT

Refer to Section 52–2.03A3, and 52–2.03A5.

52–2.07 REMOVAL OF CATCH BASINS, MANHOLES, CURB INLETS, SUMPS, ETC.

Where structures of installations of concrete, brick, blocks, etc. interfere with the construction, they shall be removed and all pipe openings shall be plugged tightly. Payment therefor will be made in accordance with bid items in the proposal. If, however, there is no bid item to cover any one or more of such removals, then in that event the removal shall be considered as incidental to the construction and costs thereof shall be included in other items of work.

Where the structures are removed, the voids shall be backfilled with suitable job excavated material and compacted as the Engineer may direct, and such compaction work shall be considered as incidental to the removal work when compaction is by water-settling. If the Engineer directs compaction by mechanical tampers, payment will be made at the unit contract price therefor in the proposal.

In the event the Engineer finds that job excavated material is not suitable for backfill and he directs that a specified backfill be imported, payment for same will be made at the unit contract price therefor when in the proposal, otherwise as extra work as provided in Section 9.03.

The removal and disposal of wooden structures shall be considered as incidental to the work, unless otherwise provided in the special provisions.

52–2.08 SALVAGE 87
52–2.09 WASTE DISPOSAL 87

52–3 MEASUREMENT AND PAYMENT

Measurement and payment will be made for such of the following items as may be included in the proposal of any particular contract:

1. "Remove Existing Pavement, Class A," per square yard.
2. Remove Existing Pavement, Class AA," per square yard.
3. "Remove Existing Pavement, Class B," per square yard.
4. "Remove Existing Pavement, Class C," per square yard.
5. "Remove Existing Pavement, Class D," per square yard.
6. "Remove Existing Sidewalk," per square yard.
7. "Remove existing Type ( ) Curb," per linear foot.

8. "Remove Existing Catch Basin Type ( )," per each.
9. "Remove Existing Manhole Type ( )," per each.
10. "Remove Existing Inlet Type ( )," per each.
11. "Mechanical Tamper," per hour.
12. "Sawing Pavement (depth)," per linear foot.

The unit contract prices for the various classes of pavement removed, and numbered types of curbs, manholes, catch basins, inlets and other items as are included in the proposal schedule shall be full compensation for all labor, tools, equipment and incidental work necessary thereto to perform the work as specified.

Section 53—Adjustment of New and Existing Utility Structures to Finish Grade

53–1 DESCRIPTION 87

53–2 DIVISION OF RESPONSIBILITY 87

53–2.01 PRIVATELY OWNED UTILITY STRUCTURES

53–2.02 PUBLICLY OWNED UTILITY STRUCTURES 87

53–2.03 CONTRACTOR TO SCHEDULE WORK

53–3 CONSTRUCTION DETAILS 88

53–3.01 ADJUSTMENT OF MANHOLES, CATCH BASINS AND SIMILAR STRUCTURES 88

53–3.01A General

Adjustment of cover castings for the subject structure to final grade when for new work constructed in conjunction with the project shall be incidental to their construction and no separate payment therefor will be made. Provided however, that when the new construction has been completed by the Contractor to a final grade as set by the Engineer and such final grade is subsequently revised by the Engineer, then the change necessary shall be made as an adjustment and paid for in accordance with the following specifications for the adjusting of existing utility structures which payment would be in addition to the original new construction payment.

Adjustment payment shall be at the bid price whenever the required adjustment consists of raising or lowering the top of the existing structure to place the cover casting to a new grade, provided the vertical adjustment does not exceed twenty (20) inches and the sizes of the structure opening remains the same. When the vertical adjustment exceeds twenty (20) inches or results in a change in the size of the structure opening, payment will be in accordance with the following provisions.

(a) Downward Adjustment: When the required adjustment is downward in excess of twenty (20) inches and cannot be made to conform to the requirements for new construction, and is not otherwise provided for on the proposal plans or special provisions, the lowering work shall be performed by the Contractor as directed by the Engineer and paid for on the basis of extra work as provided in Section 9.03.

Where adjustment is downward more than twenty (20) inches and can be made in conformance with the requirements for new work and involves removing the structure precast cone, or flat slab reducing section and reinstalling to conform to the new final grade, the adjustment shall be completed by the Contractor; and additional payment in addition to payment for adjusting will be made on the basis of linear feet for all original vertical height of the structure removed in excess of eight (8) inches to make the adjustment in accordance with new work requirement as "shafting" of the maximum diameter removed.

(b) Upward Adjustment: Where adjustment is upward in excess of twenty (20) inches and the existing precast cone or flat slab reducing section is removed and reinstalled at the new grade in conformance with the requirements for new construction, additional payment on the basis of linear feet will be made for all height in excess of twenty (20) inches as "shafting" of the maximum diameter installed.

The above conditions, as described for a structure constructed with precast sections, shall likewise apply for such structures constructed with masonry blocks or bricks in mortar and cast-in-place concrete structures.

53–3.01B Unpaved Street Grading Projects

New manholes, catch basins and similar structures constructed in conjunction with street grading projects which are to be surfaced with gravel or crushed stone shall be constructed to a point approximately eight (8) inches below the subgrade and covered with a temporary wood cover as shown on the Standard Plan No. 45. Existing structures encountered shall be cut off in similar manner. The Contractor shall carefully reference each manhole so that they may be easily found upon completion of the street work.

After placing the gravel or crushed stone surfacing, the structure and their castings shall be constructed to the finished grade of the roadway surface. Excavation necessary for bringing the structures to grade shall center about the structure and be held to the minimum area necessary. At the completion of the structure adjustment, the void around the structure shall be backfilled with materials which will result in the section required on the typical roadway section, and be thoroughly compacted.

Where bituminous surface treatment is to be placed, the structure castings shall be installed from one-half (½) inch to one (1) inch higher than the roadway surface, as the Engineer may direct.

53–3.01C Cement Concrete Paving Projects

Manholes, catch basins and similar structures shall be constructed or adjusted in the same manner as outlined in Section 53–3.01A and Section 53–3.01B, except that the final adjustment shall be made and cast iron frame be set after forms have been placed and checked. In placing the concrete pavement, extreme care shall be taken not to alter the position of the casting in any way.

53–3.01D Asphalt Concrete Paving Projects

On asphalt concrete paving projects the adjustment of new and exisiting manholes, catch basins and similar structures shall be made in accordance with the applicable requirements of Section 53–3.01A to place the castings to the proposed final grade of the asphalt concrete pavement.

53–3.01E Asphalt Resurfacing Projects

Adjustment of manholes, catch basins and similar structures on asphalt resurfacing projects shall meet the requirements of Section 53–3.01D. Unless adjustment rings for castings are provided for in the special provisions and bid proposal, existing pavements shall be removed to the extent necessary to remove the structure casting. The cost of removing the pavement, either asphalt concrete or cement concrete base, shall be considered as incidental to the work of adjusting the structure involved.

53–3.01F Storm and Sanitary Sewer or Water Projects

Manholes, catch basins and gate valve structures constructed in conjunction with sewer or water projects on graded or paved streets shall be brought to final grade as outlined previously in these specifications, Section 53–2.01A.

53–3.01G Establishment of Grade for Top of Manhole

The Engineer will establish approximate grades for tops of existing manholes, catch basins and similar structures to be adjusted as specified in Section 63–3.10 for new sewer work for the various stages of construction, and the Contractor shall be responsible for completing the adjustment to the final grade set by the Engineer.

53–3.02 ADJUSTMENT OF INLETS

The final alignment and grade adjustment of cast iron castings for existing inlets shall be established from forms, adjacent pavement, adjacent asphalt concrete surfacing when applicable; otherwise from stakes as set by the Engineer.

Where existing inlets to be adjusted are set in cement concrete pavement, or asphalt concrete pavments, all costs to the Contractor to cut the inlet castings out of the pavements to make the adjustment shall be incidental to the bid item in the proposal.

Adjustment of existing inlets to a new grade shall conform to the applicable requirements for breaking out and adjusting to a new grade as hereinbefore described for manhole catch basin and gate chamber castings. The type of inlet, Standard Plan Nos. 164, 165 and 166, determine the applicable work necessary to make the inlet adjustment. Type 164 inlet castings are imbedded in concrete as shown on Standard Plan No. 164.1, and when adjustment is required, requires the removal of the entire assembly to make the adjustment. Type 165 and Type 166 inlets have underground base structures which conform to the requirements therefor shown on Standard Plans Nos. 165.1 and 166.1, respectively.

53–3.03 ADJUSTMENT OF MONUMENTS AND CAST IRON FRAME AND COVER

Adjustment to grade of new and old cast iron frame castings for enclosing location of monuments shall conform to the applicable requirements of Section 53–3.02 for inlets, for surfacing materials involved at the location of the adjusting.

53–3.04 ADJUSTMENT OF VALVE BOX CASTINGS

Adjustment of valve box castings new or existing, shall conform to the applicable requirements of Section 53–3.02 and Section 76–3.06 respectively, as they apply to the location where adjustment is made.

53–3.05 FURNISHING CASTINGS (New Section)

Where adjustment of existing manholes, catch basins, inlets, valve boxes, etc. are required, and where the existing castings are discarded or ordered to be salvaged by the Engineer, the Contractor shall furnish new castings of the type specified and payment therefor will be made as specified below in addition to payment for making the required adjustment.

53–4 MEASUREMENT AND PAYMENT

Payment will be made for such of the following applicable bid items as are included and shown in any particular contract, consistent with measurement and payment requirements contained in the specifications for each particular item.

(1) "Adjust Existing Type ( ) Manhole Casting to Grade," per each.
(2) "Adjust Existing Type ( ) Catch Basin Casting to Grade," per each.
(3) "Adjust Existing Type ( ) Gate Chamber Casting to Grade," per each.
(4) "Adjust Existing Inlet Type ( )," per each.
(5) "Adjust Existing Cast Iron Valve Box to Grade," per each.
(6) "Adjust Existing Monument Case Casting to Grade," per each.
(7) "Shafting (diameter)," per linear foot.
(8) "Furnish Manhole Ring and Cover Casting Type ( )," per each.
(9) "Furnish Catch Basin Cover Castings Type ( )," per each.
(10) "Furnish Gate Chamber Cover Castings Type ( )," per each.
(11) "Furnish Inlet Frame and Cover Castings Type ( )," per each.
(12) "Furnish Precast Concrete Manhole Reducing Slab ('D' to 'd')," per each.
(13) "Type ( ) Inlet in Place," per each.

53–4.01 ADJUST EXISTING MANHOLE, CATCH BASIN AND GATE VALVE CHAMBER TO GRADE (Title changed for City use)

The unit contract price for "Adjust Existing Type (number) Manhole, Catch Basin, Gate Chamber, Casting to Grade," together with "Shafting" when applicable as described in Section 53–3.01A, shall be full compensation for removing the existing cast iron frame and cover, removing necessary pavement or surfacing, cutting the existing structure down where necessary, furnishing and placing a temporary cover in manholes to prevent debris entering sewer or drainage pipes at bottom, rebuilding the structure, resetting the existing cast iron frame and cover to proper grade, backfilling the void around the structure, plastering the structure throat and extension as required and removing debris from inside the structure after adjustment is completed.

53–4.02 ADJUST EXISTING INLET TO GRADE

The unit contract price for "Adjust Existing Inlet Type (number) to Grade," shall be full compensation for the necessary work incidental to the removing of existing inlet castings from their existing embedment in roadway surfacing or rigid type pavements and adjusting them to a higher or lower elevation, as required in conformance with requirements for new construction for the type of inlet specified to be adjusted to a new grade.

53–4.03 ADJUSTING EXISTING MONUMENT FRAME AND COVER TO GRADE

The unit contract price for "Adjust Existing Monument Case Casting to Grade," shall be full compensation for removing necessary material or pavement in which the existing monument case is embedded, and resetting the monument case to the new grade, as required.

53–4.04 ADJUST EXISTING VALVE BOX TO GRADE

The unit contract price for "Adjust Existing Cast Iron Valve Box to Grade," shall be full compensation for removing the necessary material or pavement in which the cast iron valve box is embedded and for resetting the same to the proper grade, including backfilling the void made around the adjusted casting as is necessary to conform to new work standards, as described in Section 76–3.06.

53–4.05 SHAFTING (Tile changed for City use)

The unit contract price for "Shafting" per linear foot of the diameter involved, as described in Section 54–3.01A for completing adjustment construction for manholes, catch basins and gate chambers shall be full compensation for completing the upward or downward change in the existing structure shafting as required, which payment will be in addition to payment for adjusting the existing cover casting to final grade, Section 54–4.01.

53–4.06 TYPE ( ) INLET IN PLACE

The unit contract price per each for "Type ( ) Inlet in Place," shall be full compensation for furnishing all labor, equipment and material necessary to construct inlets as shown on the standard plan and in accordance with Section 64, including the adjustment to finished grade.

53–4.07 FURNISHING CASTINGS 89

53–4.08 ASPHALT CONCRETE 89

53–4.09 INCIDENTAL WORK 89

53–3.01G Establishment of Grade for Top of Manhole

The Engineer will establish approximate grades for tops of existing manholes, catch basins and similar structures to be adjusted as specified in Section 63–3.10 for new sewer work for the various stages of construction, and the Contractor shall be responsible for completing the adjustment to the final grade set by the Engineer.

53–3.02 ADJUSTMENT OF INLETS

In the adjustment of existing inlets to a new grade, the type of inlet (Standard Plans Nos. 164, 165 and 166, respectively) determines the work necessary to make the adjustment. For example, Type 164 inlets are embedded entirely in concrete, as shown on Standard Plan No. 164.1, and when adjustment is required, the entire assembly is removed and reassembled in concrete at the new location and grade. Type 165 and Type 166 inlets have underground base structures constructed of masonry units or concrete, with castings placed on top of the base structure, as shown on Standard Plan 165.1 and Standard Plan 166.1, and when adjustment is up or down to the new grade, the work required is similar to the requirements hereinbefore described for adjusting cover castings of manholes, catch basins and water main gate valve chambers in Section 53–3.01A.

Where inlets to be adjusted are set in cement concrete pavement or asphalt concrete pavement, all work costs to the Contractor to cut the castings out of the pavement to make the adjustment shall be incidental to the unit bid item in the contract for adjusting the type of inlet.

Final alignment and grade adjustment of inlets shall be established from forms, adjacent pavement, adjacent asphalt concrete surfacing when applicable; otherwise, from stakes as set by the Engineer.

53–3.03 ADJUSTMENT OF MONUMENTS AND CAST IRON FRAME AND COVER

Adjustment to grade of new and old cast iron frame castings for enclosing location of monuments shall conform to the applicable requirements of Section 53–3.02 for inlets, for surfacing materials involved at the location of the adjusting.

53–3.04 ADJUSTMENT OF VALVE BOX CASTINGS

Adjustment of valve box castings new or existing, shall conform to the applicable requirements of Section 53–3.02 and Section 76–3.06 respectively, as they apply to the location where adjustment is made.

53–3.05 FURNISHING CASTINGS (New Section)

Where adjustment of existing manholes, catch basins, inlets, valve boxes, etc. are required, and where the existing castings are discarded or ordered to be salvaged by the Engineer, the Contractor shall furnish new castings of the type specified and payment therefor will be made as specified below in addition to payment for making the required adjustment.

53–4 MEASUREMENT AND PAYMENT

Payment will be made for such of the following applicable bid items as are included and shown in any particular contract, consistent with measurement and payment requirements contained in the specifications for each particular item.

(1) "Adjust Existing Type ( ) Manhole Casting to Grade," per each.
(2) "Adjust Existing Type ( ) Catch Basin Casting to Grade," per each.
(3) "Adjust Existing Type ( ) Gate Chamber Casting to Grade," per each.
(4) "Adjust Existing Inlet Type ( )," per each.
(5) "Adjust Existing Cast Iron Valve Box to Grade," per each.
(6) "Adjust Existing Monument Case Casting to Grade," per each.
(7) "Shafting (diameter)," per linear foot.
(8) "Furnish Manhole Ring and Cover Casting Type ( )," per each.
(9) "Furnish Catch Basin Cover Castings Type ( )," per each.
(10) "Furnish Gate Chamber Cover Castings Type ( )," per each.
(11) "Furnish Inlet Frame and Cover Castings Type ( )," per each.
(12) "Furnish Precast Concrete Manhole Reducing Slab ('D' to 'd')," per each.
(13) "Type ( ) Inlet in Place," per each.

53–4.01 ADJUST EXISTING MANHOLE, CATCH BASIN AND GATE VALVE CHAMBER TO GRADE (Title changed for City use)

The unit contract price for "Adjust Existing Type (number) Manhole, Catch Basin, Gate Chamber, Casting to Grade," together with "Shafting" when applicable as described in Section 53–3.01A, shall be full compensation for removing the existing cast iron frame and cover, removing necessary pavement or surfacing, cutting the existing structure down where necessary, furnishing and placing a temporary cover in manholes to prevent debris entering sewer or drainage pipes at bottom, rebuilding the structure, resetting the existing cast iron frame and cover to proper grade, backfilling the void around the structure, plastering the structure throat and extension as required and removing debris from inside the structure after adjustment is completed.

53–4.02 ADJUST EXISTING INLET TO GRADE

The unit contract price for "Adjust Existing Inlet Type (number) to Grade" shall be full compensation for the necessary work incidental to the removing of existing inlet castings from their existing embedment in roadway surfacing or rigid type pavements and adjusting or moving them to a new location and grade, in conformance with requirements for new construction for the type of inlet specified to be adjusted to a new grade.

53–4.03 ADJUST EXISTING MONUMENT FRAME AND COVER TO GRADE

The unit contract price for "Adjust Existing Monument Case Casting to Grade," shall be full compensation for removing necessary material or pavement in which the existing monument case is embedded, and resetting the monument case to the new grade, as required.

53–4.04 ADJUST EXISTING VALVE BOX TO GRADE

The unit contract price for "Adjust Existing Cast Iron Valve Box to Grade," shall be full compensation for removing the necessary material or pavement in which the cast iron valve box is embedded and for resetting the same to the proper grade, including backfilling the void made around the adjusted casting as is necessary to conform to new work standards, as described in Section 76–3.06.

53–4.05 SHAFTING (Title changed for City use)

The unit contract price for "Shafting" per linear foot of the diameter involved, as described in Section 53–3.01A for completing adjustment construction for manholes, catch basins and gate chambers, shall be full compensation for completing the upward or downward change in the existing structure shafting as required, which payment will be in addition to payment for adjusting the existing cover casting to final grade, Section 53–4.01.

53–4.06 FURNSH TYPE ( ) INLET IN PLACE

The unit contract price per each for "Furnish Type ( ) Inlet in Place," shall be full compensation for furnishing all labor, equipment and material necessary to construct inlets as shown on the standard plan and in accordance with Section 64, including the adjustment to finished grade.

53–4.07 FURNISHING CASTINGS 89

53–4.08 ASPHALT CONCRETE 89

53–4.09 INCIDENTAL WORK 89

Section 53—*Adjustment of New and Existing Utility Structures to Finish Grade* Page 53

53–3.01G Establishment of Grade for Top of Manhole

The Engineer will establish approximate grades for tops of existing manholes, catch basins and similar structures to be adjusted as specified in Section 63–3.10 for new sewer work for the various stages of construction, and the Contractor shall be responsible for completing the adjustment to the final grade set by the Engineer.

53–3.02 ADJUSTMENT OF INLETS

The final alignment and grade adjustment of cast iron castings for existing inlets shall be established from forms, adjacent pavement, adjacent asphalt concrete surfacing when applicable; otherwise from stakes as set by the Engineer.

Where existing inlets to be adjusted are set in cement concrete pavement, or asphalt concrete pavments, all costs to the Contractor to cut the inlet castings out of the pavements to make the adjustment shall be incidental to the bid item in the proposal.

Adjustment of existing inlets to a new grade shall conform to the applicable requirements for breaking out and adjusting to a new grade as hereinbefore described for manhole catch basin and gate chamber castings. The type of inlet, Standard Plan Nos. 164, 165 and 166, determine the applicable work necessary to make the inlet adjustment. Type 164 inlet castings are imbedded in concrete as shown on Standard Plan No. 164.1, and when adjustment is required, requires the removal of the entire assembly to make the adjustment. Type 165 and Type 166 inlets have underground base structures which conform to the requirements therefor shown on Standard Plans Nos. 165.1 and 166.1, respectively.

53–3.03 ADJUSTMENT OF MONUMENTS AND CAST IRON FRAME AND COVER

Adjustment to grade of new and old cast iron frame castings for enclosing location of monuments shall conform to the applicable requirements of Section 53–3.02 for inlets, for surfacing materials involved at the location of the adjusting.

53–3.04 ADJUSTMENT OF VALVE BOX CASTINGS

Adjustment of valve box castings new or existing, shall conform to the applicable requirements of Section 53–3.02 and Section 76–3.06 respectively, as they apply to the location where adjustment is made.

53–3.05 FURNISHING CASTINGS (New Section)

Where adjustment of existing manholes, catch basins, inlets, valve boxes, etc. are required, and where the existing castings are discarded or ordered to be salvaged by the Engineer, the Contractor shall furnish new castings of the type specified and payment therefor will be made as specified below in addition to payment for making the required adjustment.

53–4 MEASUREMENT AND PAYMENT

Payment will be made for such of the following applicable bid items as are included and shown in any particular contract, consistent with measurement and payment requirements contained in the specifications for each particular item.

(1) "Adjust Existing Type ( ) Manhole Casting to Grade," per each.
(2) "Adjust Existing Type ( ) Catch Basin Casting to Grade," per each.
(3) "Adjust Existing Type ( ) Gate Chamber Casting to Grade," per each.
(4) "Adjust Existing Inlet Type ( )," per each.
(5) "Adjust Existing Cast Iron Valve Box to Grade," per each.
(6) "Adjust Existing Monument Case Casting to Grade," per each.
(7) "Shafting (diameter)," per linear foot.
(8) "Furnish Manhole Ring and Cover Casting Type ( )," per each.
(9) "Furnish Catch Basin Cover Castings Type ( )," per each.
(10) "Furnish Gate Chamber Cover Castings Type ( )," per each.
(11) "Furnish Inlet Frame and Cover Castings Type ( )," per each.
(12) "Furnish Precast Concrete Manhole Reducing Slab ('D' to 'd')," per each.
(13) "Type ( ) Inlet in Place," per each.

53–4.01 ADJUST EXISTING MANHOLE, CATCH BASIN AND GATE VALVE CHAMBER TO GRADE (Title changed for City use)

The unit contract price for "Adjust Existing Type (number) Manhole, Catch Basin, Gate Chamber, Casting to Grade," together with "Shafting" when applicable as described in Section 53–3.01A, shall be full compensation for removing the existing cast iron frame and cover, removing necessary pavement or surfacing, cutting the existing structure down where necessary, furnishing and placing a temporary cover in manholes to prevent debris entering sewer or drainage pipes at bottom, rebuilding the structure, resetting the existing cast iron frame and cover to proper grade, backfilling the void around the structure, plastering the structure throat and extension as required and removing debris from inside the structure after adjustment is completed.

53–4.02 ADJUST EXISTING INLET TO GRADE

The unit contract price for "Adjust Existing Inlet Type (number) to Grade," shall be full compensation for the necessary work incidental to the removing of existing inlet castings from their existing embedment in roadway surfacing or rigid type pavements and adjusting them to a higher or lower elevation, as required in conformance with requirements for new construction for the type of inlet specified to be adjusted to a new grade.

53–4.03 ADJUSTING EXISTING MONUMENT FRAME AND COVER TO GRADE

The unit contract price for "Adjust Existing Monument Case Casting to Grade," shall be full compensation for removing necessary material or pavement in which the existing monument case is embedded, and resetting the monument case to the new grade, as required.

53–4.04 ADJUST EXISTING VALVE BOX TO GRADE

The unit contract price for "Adjust Existing Cast Iron Valve Box to Grade," shall be full compensation for removing the necessary material or pavement in which the cast iron valve box is embedded and for resetting the same to the proper grade, including backfilling the void made around the adjusted casting as is necessary to conform to new work standards, as described in Section 76–3.06.

53–4.05 SHAFTING (Tile changed for City use)

The unit contract price for "Shafting" per linear foot of the diameter involved, as described in Section 54–3.01A for completing adjustment construction for manholes, catch basins and gate chambers shall be full compensation for completing the upward or downward change in the existing structure shafting as required, which payment will be in addition to payment for adjusting the existing cover casting to final grade, Section 54–4.01.

53–4.06 TYPE ( ) INLET IN PLACE

The unit contract price per each for "Type ( ) Inlet in Place," shall be full compensation for furnishing all labor, equipment and material necessary to construct inlets as shown on the standard plan and in accordance with Section 64, including the adjustment to finished grade.

53–4.07 FURNISHING CASTINGS 89

53–4.08 ASPHALT CONCRETE 89

53–4.09 INCIDENTAL WORK 89

Section 54—Pavement Patching

54–1 DESCRIPTION

This work shall consist of the patching of various types of pavement cuts, the performance of which shall be in accordance with the requirements outlined hereinafter and as shown on Standard Plan No. 121.

54–2 MATERIALS 89

54–3 CONSTRUCTION DETAILS 89

54–3.01 GENERAL 89

54–3.02 CEMENT CONCRETE PAVEMENTS 89

54–3.03 RIGID TYPE PAVEMENTS RESURFACED WITH ASPHALT CONCRETE 89

54–3.04 ASPHALT CONCRETE STREETS ON GRANULAR BASE 89

54–3.05 OIL MAT STREETS 90

54–3.06 INCIDENTAL WORK 90

54–3.07 RESPONSIBILITY FOR PAVEMENT PATCHING (New Section)

On all public works contracts, the Contractor shall perform all work for backfilling of excavations made under existing pavements, and the restoration of pavement cuts, patching, in accordance with these specifications unless otherwise provided in the special provisions of the proposals.

For all other contract work, the backfilling of excavation under pavements as a result of cuts made therein for such work and the restoring of the pavement by patching in accordance with these specifications, shall be by City forces and the cost thereof borne by the Contractor.

54–4 MEASUREMENT AND PAYMENT

Payment for pavement patching above subgrade will be made in the following items:

1. "Cement Concrete Class 6.5 (1½) H.E.S. for Pavement Patch," per cubic yard.
2. "Asphalt Concrete Class B for Pavement Patch," per ton.
3. "Bituminous Plant Mix for Pavement Patch," per ton.

Measurement for payment of cement concrete used in patching will be based upon computation of the neat lines of the section shown on Standard Plan No. 121, and not be batch volume.

The unit contract price per cubic yard for cement concrete and per ton for asphalt concrete or bituminous plant mix as shown in the proposal shall be full compensation for all labor, tools and materials and for all incidental work required to complete the patching in accordance with the specifications and standard drawing, excepting however, that payment for selected materials will be made in accordance with applicable bid items but compaction of the materials shall be considered as incidental to the construction and no payment will be made therefor.

Section 55—Top Soil

55–1 DESCRIPTION 90

55–2 MATERIALS 90

55–2.01 TOP SOIL, PROCURED 90

55–3 CONSTRUCTION DETAILS 90

55–3.01 PLACEMENT OF TOP SOIL 90

55–3.02 REMOVAL AND REPLACEMENT OF TOP SOIL 90

55–4 MEASUREMENT 90

55–4.01 TOP SOIL, PROCURED 90

55–4.02 REMOVAL AND REPLACEMENT OF TOP SOIL 90

55–5 PAYMENT 90

Section 56—Lawn Removal and Replacement

56–1 DESCRIPTION 90

56–2 CONSTRUCTION DETAILS 90

56–3 MEASUREMENT 91

56–4 PAYMENT 91

Section 57—Finishing and Cleanup

57–1 DESCRIPTION

After all other work embraced in the contract is completed and before final acceptance of the contract, the entire roadway, including the roadbed, planting, sidewalk areas, ditches, utility trenches and construction areas shall be neatly finished to the lines, grades and cross sections shown on the plans and as hereinbefore specified.

57–2 CONSTRUCTION DETAILS

Slopes, sidewalk areas, planting areas and roadway shall be smoothed and finished to the required cross section and grade by means of a grading machine insofar as it is possible to do so without damaging existing improvements, trees and shrubs. Machine dressing as necessary shall be supplemented by hand methods to complete the finishing work according to plan.

Upon completion of the cleaning and dressing the project shall appear uniform in all respects. All graded areas shall be true to line and grade as shown on the typical sections unless otherwise directed by the Engineer. Where within the entire construction area, existing planting areas are below existing or new construction curb and sidewalk elevations, they shall be filled and dressed to a uniform slope between top of curb and sidewalk. Whenever such fill material when placed, is not compacted into place, it shall, when placed be spread loose to a uniform slope height across entire planting area, that will allow for a natural occurring settlement to the final grade elevation.

All rock in excess of one (1) inch diameter in the top three (3) inches of the finished surface shall be removed by raking or screening from all the planting areas within the entire construction area and shall be disposed of the same as required for other waste material. In no instance shall the rock be thrown onto private property. Rock overhanging on slopes shall be removed and slopes dressed neatly so as to present a uniform well-sloped surface.

All windrows of earth at the outer lateral limits of the project shall be removed entirely. Trash of all kinds resulting from clearing and grubbing or grading operations shall be removed and not placed in areas adjacent to the project. Where machine operations have broken down brush and trees beyond the lateral limits of the project, the Contractor shall remove and dispose of same at his own expense.

Drainage facilities such as inlets, catch basins, culverts and open ditches shall be cleaned of all debris which is the result of the Contractor's operations, unless the specifications of any particular section or the special provisions provide otherwise.

Where, by permission and in accordance with the provisions of Section 4.06A, spoil is dumped on private property, the Concratoc will not be required to perform any work beyond that described.

The Contractor shall remove and dispose of construction stakes at the time of his final finishing and cleanup operations, unless otherwise directed by the Engineer.

All pavements and oil mat surfaces, whether new or old, shall be thoroughly cleaned. Existing exposed surfaces of cement concrete pavements, curbs, sidewalks, walls, posts and other cement concrete facilities which have been discolored by asphalt cement as a result of asphalt paving operations, shall be thoroughly cleaned of such materials to the extent necessary to restore the original color existing prior to the asphalt concrete operations. Castings for manholes, catch basins, water gate chambers, vaults, valve boxes, inlets; hydrant, metal poles and other similar installations which have been sprayed with asphalt materials shall also be thoroughly cleaned of such material to restore the original surface.

The Contractor shall flush the street at the conclusion of the work unless otherwise provided in the special provisions. Flusher shall be of a pressure type and approved by the Engineer. Water for flushing will be furnished at no cost to the Contractor in accordance with the applicable provisions of Section 5.13.

Sidewalks shall be cleaned by hand brooming in conjunction with water as necessary.

On sewer and water distribution projects where the construction is in undeveloped areas, the entire area which has been disturbed by the construction shall be shaped so that upon completion the area will present a uniform appearance, blending into the contour of the adjacent properties, and all requirements outlined previously for developed areas shall be met, except that it will not be necessary to pick up rocks unless so provided in the special provisions.

57–3 MEASUREMENT AND PAYMENT

Measurement for finishing and cleanup will be based upon a lump sum contract price, or upon a per station (100-foot) unit contract price, whichever is shown in the porposal.

Payment will be made for such of the following bid items as are included in any particular contract:

1. "Finishing and Cleanup," per lump sum.
2. "Finishing and Cleanup," per station (100-foot).
3. "Hydrant Water," per linear foot.
4. "Hauled Water," per M gallons.

Regardless of whether payment is made by lump sum or upon measurement by stations, it shall include the finishing and cleaning of all side street approaches. Where payment is based upon the station unit, measurement will be along the center line of the project and the finishing and cleaning of side street approaches will not be included in the station quantities. Finishing and cleaning of side street approaches will not be included in the station quantities. Finishing and cleaning of side street approaches shall be considered as incidental to the construction and all costs thereof shall be included in the lump sum, or in the unit contract price per station, as measured along center line of the project.

Water for flushing shall be paid for from project funds as provided in Section 5.13, and the Contractor for application with his equipment will be paid for flushing on the basis of linear feet of street cleaned, or per thousand (M) gallons, whichever applied in accordance with the provisions of Section 16.

In event the proposal does not include a bid item for "Finishing and Cleanup," the work thereof, including water for flushing, shall be considered as incidental to the construction of the project and all costs thereof shall be included by the Contractor in other items of work.

(Sections Nos. 58 and 59 reserved for possible future use.)

Section 60—Pipe Materials and Testing for Sewers, Drains and Culverts

60–1 DESCRIPTION

Pipe used in sanitary sewer and storm drain construction, unless otherwise specified, shall be of cement concrete.

The kind of pipe the Contractor elects to use shall not be of less strength than that of the pipe shown on the plan.

60–2 GENERAL 92

60–3 MATERIALS AND TESTING 92

60–3.01 PIPE MATERIALS 92

60–3.01A Concrete Pipe, Nonreinforced

Nonreinforced concrete pipe shall conform to ASTM Designation C 14, Table II (extra strength), except as otherwise provided and except the permeability test shall be conducted as follows: The pipe selected for test shall be placed either end down on a soft rubber pad, at the option of the Engineer, and filled with water. The pipe shall be kept full of water for a period of two minutes. At the end of this time, the outer surface of the pipe shall be examined for leaks. A leak is defined as a moist spot from which water may be wiped with the hand; when wiped dry with a cloth, moisture will reappear at the surface of the leak. The Engineer may select a minimum of two per cent (2%) but in no case shall less than five (5) pipe of each size be tested.

60–3.01B Concrete Pipe Reinforced

Reinforced concrete pipe shall conform to ASTM Designation C 76, except as otherwise provided, and shall be of the class noted on the plans or in the special provisions. Pipe ends of reinforced concrete pipe may be bell and spigot, modified bell and spigot, or tongue and groove unless otherwise specified in the special provisions.

Acceptance shall be based on load bearing tests, material tests and inspection of the product at all stages of construction. Acceptance by cylinders instead of load bearing tests is permissible when agreed upon by the manufacturer and the Engineer prior to manufacture.

Both bells and spigots shall be reinforced in pipe thirty (30) inches or more in diameter, the length of the unit shall be not less than seven feet six inches (7'-6"), unless otherwise specified in the special provisions.

60–3.01C Vitrified Clay Pipe 92

60–3.01D Asbestos-Cement Pipe 92

60–3.01E Galvanized Corrugated Metal Pipe 92

60–3.01E1 Bituminous Coated Paved Invert Metal Pipe 92

60–3.01E2 Asbestos Impregnated Galvanized Corrugated Metal Pipe 92

60–3.01E3 Smooth Lined Corrugated Metal Pipe 92

60–3.02 JOINTING MATERIALS 92

60–3.02A Flexible Gasketed Joints 92

60–3.02B Coupling Bands for Corrugated Metal Pipe 93

60–3.02C Mortar Joints (Not Used) 93

60–3.03 FITTINGS 93

60–3.04 CAP FOR FITTINGS 93

60–4 MEASUREMENT AND PAYMENT 94

Section 61—Trench Excav., Backfill, Foundation and Bedding for Sewers, Drains and Culverts

61–1 DESCRIPTION

This section includes all excavating, backfilling, disposal of surplus and unsuitable material and all other work incidental to the construction of trenches, including all excavating required for manholes or other structures forming a part of the pipe line and not otherwise classified as "Structure Excavation."

Sewer excavation and backfill for the construction of sewers as required by these specifications, shall include the following work requirements:

(1) The excavation of any and all original materials and native earth ground formations encountered of whatsoever nature they may be, except solid rock, buried concrete, stumps and timber in officially graded streets, for which separate payment will be made, as specified therefor in Section 13 for rock and Section 73–2.04, respectively. It shall also include any additional depth of excavation that may be required during the construction by the Engineer, to remove unsatisfactory foundation materials; provided, however, such additional depth below the plan grades does not exceed a depth of twelve (12) inches, and can be attained by using the same excavating equipment currently being used by the Contractor for the subject area.

For depths greater than twelve (12) inches below the plan grade, all extra work therefor to reach a depth greater than twelve (12) inches below the plan grade, shall be negotiated as extra work and payment made as specified in Section 9.03.

(2) Any tight sheeting, timbering, its shoring and bracing, that may be required to control the sides of the excavations to the depths shown on the plans for safety of workment, existing utilities and the removal of such materials when the excavations are subsequently backfilled.

(3) All pumps or other dewatering equipment and their operation and maintenance that may be necessary for the control of water, as may be necessary in the excavations during the construction period.

(4) Control of excavated materials piled adjacent to the trench excavation to be used for backfill, including trucking of excavated materials to a storage site when no space is available for piling alongside trenches and the returning of the material from storage for backfill.

(5) The final removal and disposal from the project of all surplus original project excavation materials that have not been used for the backfilling of excavations or for embankments.

All costs resulting to the Contractor for sewer excavation and backfill, as above specified, when no bid item is included in the proposal for "Sewer Trench Excavation and Backfill," shall be considered as incidental to the construction and included in the various unit bid contract prices for the various sizes of pipes to be installed. When the proposal contains a specific bid item for "Sewer Trench Excavation and Backfill," measurement and payment will be made as specified hereinafter in Section 61–4 and Section 61–5.

61–2 CLASSIFICATION (Not Used) 94

61–2.01 TRENCH EXCAVATION AND BACKFILL, CLASS A (Not Used) 94

61–2.02 TRENCH EXCAVATION AND BACKFILL, CLASS B (Not Used) 94

61–2.03 TRENCH EXCAVATION AND BACKFILL, CLASS C (Not Used) 94

61–2.04 TRENCH EXCAVATION AND BACKFILL, CLASS D (Not Used) 94

61–3 CONSTRUCTION DETAILS 94

61–3.01 EXCAVATION

All trenches for main sewers shall be excavated as open trenches unless other methods of excavation such as tunnels or jacking the pipes are permitted by the special provisions, or authorized specifically by the Engineer.

Where existing Water Department services are to be cut and reconnected to permit use of trenching machines, all such cutting and reconnecting shall be performed by the Seattle Water Department in accordance with Section 5.13.

The length of open main sewer trench excavated in advance of pipe laying and backfilling operations shall be kept to a minimum and in no case shall exceed three hundred (300) feet unless authorized by the Engineer. All materials excavated from trenches that are to be used for backfilling and piled adjacent to the trench, shall be piled so as to cause as little inconvenience as possible to essential public services.

When the confines of the right of way in which sewer trenches are being excavated are too narrow to permit the piling of the excavated material beside the trench as might be the case in an alley or easement through private property, or when on streets where sewers are being constructed in the parking strips or improved arterial thoroughfares and the obstructing of traffic is not allowable, the Contractor shall haul all excavated materials that are to be used for backfilling that cannot be piled satisfactorily in the alley, easement or public thoroughfare, to a storage site and then rehaul it to the trench for backfilling.

Unless otherwise specified in the special provisions of the contract, no separate payment will be made for hauling excavated material to a storage site and rehauling back for backfilling. All costs therefor resulting to the Contractor shall be included in his contract bid items for sewer pipe in the proposal.

61–3.01A Widths of Sewer Trenches (New Section)

The maximum permissible sewer trench width from the bottom of the trench to the crown of the pipe shall be as follows:

15-inch diameter and smaller.....40 inches
18-inch diameter and larger.....1½ x inside diameter + 18 inches

In all cases, trenches must be of sufficient width to permit proper jointing of the pipe and backfilling of material along the sides of the pipe. Trench width at the surface of the ground shall be kept to the minimum amount necessary to install the pipe in a safe manner, ordinarily accomplished when sheeting is not used for controlling the width of the trench, by sloping the trench sides to a safe angle of repose for the material encountered. Provided however, that the maximum width of the trench excavation in a legally graded and improved street, alley or other right of way, where tight sheeting and/or shoring and bracing is not being placed by the Contractor, shall be a width equal to the required trench bottom width at the crown of pipe plus four (4) inches per foot trench above the pipe crown elevation. For example, for fifteen (15) foot depth of trench to the top of a fifteen (15) inch diameter pipe, the maximum top width of trench would be forty (40) inches plus fifteen (15) times four (4) inches, a total of one hundred (100) inches (8'-4").

In the event the Contractor's excavation methods are such that he elects to excavate trenches with top widths wider than as above calculated, as an alternate to the requirements of item (2) in Section 61–1 for tight sheeting, shoring and bracing, and such procedure is permitted by the Engineer, all such over-excavation of materials, surface improvements, and subsequent replacement outside the specified maximum width including consolidation of backfill shall be at the Contractor's expense. Trenches wider than the maximum specified may result in a greater load of overburden than the pipe is designed for and consequently, if the maximum width is exceeded by the Contractor without authorization of the Engineer, the Contractor, at his expense, will be required, when the pipe design strength is not adequate as determined by the Engineer, to provide a higher strength classification of pipe or Class "A" pipe bedding.

Excavation for manholes and other structures shall be sufficient to provide a minimum of twelve (12) inches between their outside surfaces and the sides of the excavation.

61–3.01B Control of Material Piled Alongside Trench (New Section)

All material excavated from trenches and piled adjacent to the trench or in a roadway or public thoroughfare shall be piled and maintained so that the toe of the slope of the material is at least two (2) feet from the edge of the trench. It shall be piled in such manner as will cause a minmum of inconvenience to public travel, and provision shall be made for merging traffic where such is necessary. Free access shall be provided to all fire hydrants, water valves and meters, and clearance shall be left to enable free flow of storm water in all gutters, other conduits and natural watercourses.

61–3.02 DEWATERING

Trenches shall be kept free of water at all times from surface, subsurface or other sources until bedding, pipe laying and backfilling has been completed to a sufficient depth for protection of the pipe against damage therefrom. Dewatering of trenches may be accomplished in any manner the Contractor may devise to an approved outlet. Water, however, shall not be permitted to drain into the newly placed sewer line during the construction period unless authorized by the Engineer.

Any damage resulting from water in trenches for any reason shall not relieve the Contractor from his responsibility for the work.

61–3.03 FOUNDATIONS AND BEDDING 95

61–3.03A Foundation Preparation

Proper preparation of foundation, placement of foundation material where required, and placement of bedding material shall precede the installation of all sewer and culvert pipe. This shall include the necessary leveling of trench bottom and the removal of all loosened material. It shall also include leveling of the foundation material to a uniform grade so that the entire length of pipe, when placed, will rest firmly upon an adequate foundation. Backfill around the pipe shall be placed in a manner to meet the requirements specified hereinafter.

61–3.03B Classification of Bedding

Bedding for sewer and drain pipes, when not of excavated material, shall be classified as Class A Bedding and Class B Bedding. Bedding shall be Class B unless otherwise provided in the special provisions or directed by the Engineer.

The Engineer shall have authority to change bedding classifications and the limits thereof as he may determine necessary during the progress of the work, provided, however, that changes in bedding limits, when required, shall not be for less than one hundred (100) feet.

Where unauthorized excavation has been made below the established grade and it does not exceed six (6) inches, the Contractor may substitute Class B bedding material at his expense in lieu of foundation material as specified in Section 61–3.03D.

61–3.03B1 Class A Bedding

Class A bedding shall consist of a pipe cradle constructed of Class 4 (1½) portland cement concrete as specified in Section 39–3.01. The bottom of the trench shall be fully compacted before placement of pipe or cradle. Cradle construction shall conform to the details on standard drawing No. 177.

The unit contract price per linear foot for Class A bedding shall be full compensation for furnishing all labor, equipment and materials necessary to construct the concrete cradle. Any trench excavation, furnishing and placing of select bedding material and compaction of same will be paid for in accordance with applicable bid items in the proposal.

61–3.03B2 Class B Bedding

Class B bedding for pipe shall conform to the cross section details shown on standard plan No. 177. The

Section 60—Pipe Materials and Testing for Sewers, Drains and Culverts

60–1 DESCRIPTION

Pipe for sanitary sewers and storm drains shall be cement concrete pipe, vitrified clay pipe or asbestos cement pipe having flexible gasketed joints.

Pipe for culverts shall be cement concrete pipe or corrugated galvanized metal pipe.

60–2 GENERAL 92

60–3 MATERIALS AND TESTING 92

60–3.01 PIPE MATERIALS 92

60–3.01A Concrete Pipe, Nonreinforced

Nonreinforced concrete pipe shall conform to ASTM Designation C 14, Table II (extra strength), except as otherwise provided and except the permeability test shall be conducted as follows: The pipe selected for test shall be placed either end down on a soft rubber pad, at the option of the Engineer, and filled with water. The pipe shall be kept full of water for a period of two minutes. At the end of this time, the outer surface of the pipe shall be examined for leaks. A leak is defined as a moist spot from which water may be wiped with the hand; when wiped dry with a cloth, moisture will reappear at the surface of the leak. The Engineer may select a maximum of two per cent (2%) but in no case shall less than five (5) pipe of each size be tested.

60–3.01B Concrete Pipe Reinforced

Reinforced concrete pipe shall conform to ASTM Designation C 76, except as otherwise provided, and shall be of the class noted on the plans or in the special provisions. Pipe ends of reinforced concrete pipe may be bell and spigot, modified bell and spigot, or tongue and groove unless otherwise specified in the special provisions.

Acceptance shall be based on load bearing tests, material tests and inspection of the product at all stages of construction. Acceptance by cylinders instead of load bearing tests is permissible when agreed upon by the manufacturer and the Engineer prior to manufacture.

Both bells and spigots shall be reinforced in pipe thirty (30) inches or more in diameter, the length of the unit shall be not less than seven feet six inches (7'-6"), unless otherwise specified in the special provisions.

60–3.01C Vitrified Clay Pipe 92

60–3.01D Asbestos-Cement Pipe 92

60–3.01E Galvanized Corrugated Metal Pipe 92

60–3.01E1 Bituminous Coated Paved Invert Metal Pipe 92

60–3.01E2 Asbestos Impregnated Galvanized Corrugated Metal Pipe 92

60–3.01E3 Smooth Lined Corrugated Metal Pipe 92

60–3.02 JOINTING MATERIALS 92

60–3.02A Flexible Gasketed Joints 92

60–3.02B Coupling Bands for Corrugated Metal Pipe 93

60–3.02C Mortar Joints (Not Used) 93

60–3.03 FITTINGS 93

60–3.04 CAP FOR FITTINGS 93

60–4 MEASUREMENT AND PAYMENT 94

Section 61—Trench Excav., Backfill, Foundation and Bedding for Sewers, Drains and Culverts

61–1 DESCRIPTION

This section includes all excavating, backfilling, disposal of surplus and unsuitable material and all other work incidental to the construction of trenches, including all excavating required for manholes or other structures forming a part of the pipe line and not otherwise classified as "Structure Excavation."

Sewer trench excavation and backfill for the construction of sewers, as required by these specifications, shall include the following work requirements:

(1) The excavation of any and all original materials and native earth ground formations encountered of whatsoever nature they may be, except solid rock, buried concrete, stumps and timber in officially graded streets, for which separate payment will be made, as specified therefor in Section 13 for rock and Section 73–2.04, respectively. It shall also include any additional depth of excavation that may be required during the construction by the Engineer, to remove unsatisfactory foundation materials; provided, however, such additional depth below the plan grades does not exceed a depth of twelve (12) inches, and can be attained by using the same excavating equipment currently being used by the Contractor for the subject area.

For depths greater than twelve (12) inches below the outside surface of the pipe barrel placed to the invert grade shown on the plans, all extra work therefor to reach a depth greater than twelve (12) inches below the plan grade shall be negotiated as extra work and payment made as specified in Section 9.03.

(2) Any tight sheeting, timbering, its shoring and bracing, that may be required to control the sides of the excavations to the depths shown on the plans for safety of workmen, existing utilities and the removal of such materials when the excavations are subsequently backfilled.

(3) All pumps or other dewatering equipment and their operation and maintenance that may be necessary for the control of water, as may be necessary in the excavations during the construction period.

(4) Control of excavated materials piled adjacent to the trench excavation to be used for backfill, including trucking of excavated materials to a storage site when no space is available for piling alongside trenches and the returning of the material from storage for backfill.

(5) The final removal and disposal from the project of all surplus original project excavation materials that have not been used for the backfilling of excavations or for embankments.

All costs resulting to the Contractor for sewer excavation and backfill, as above specified, when no bid item is included in the proposal for "Sewer Trench Excavation and Backfill," shall be considered as incidental to the construction and included in the various unit bid contract prices for the various sizes of pipes to be installed. When the proposal contains a specific bid item for "Sewer Trench Excavation and Backfill," measurement and payment will be made as specified hereinafter in Section 61–4 and Section 61–5.

61–2 CLASSIFICATION (Not Used) 94

61–2.01 TRENCH EXCAVATION AND BACKFILL, CLASS A (Not Used) 94

61–2.02 TRENCH EXCAVATION AND BACKFILL, CLASS B (Not Used) 94

61–2.03 TRENCH EXCAVATION AND BACKFILL, CLASS C (Not Used) 94

61–2.04 TRENCH EXCAVATION AND BACKFILL, CLASS D (Not Used) 94

61–3 CONSTRUCTION DETAILS 94

61–3.01 EXCAVATION

All trenches for main sewers shall be excavated as open trenches unless other methods of excavation such as tunnels or jacking the pipes are permitted by the special provisions, or authorized specifically by the Engineer.

Where existing Water Department services are to be cut and reconnected to permit use of trenching machines, all such cutting and reconnecting shall be performed by the Seattle Water Department in accordance with Section 5.13.

The length of open main sewer trench excavated in advance of pipe laying and backfilling operations shall be kept to a minimum and in no case shall exceed three hundred (300) feet unless authorized by the Engineer. All materials excavated from trenches that are to be used for backfilling and piled adjacent to the trench, shall be piled so as to cause as little inconvenience as possible to essential public services.

When the confines of the right of way in which sewer trenches are being excavated are too narrow to permit the piling of the excavated material beside the trench as might be the case in an alley or easement through private property, or when on streets where sewers are being constructed in the parking strips or improved arterial thoroughfares and the obstructing of traffic is not allowable, the Contractor shall haul all excavated materials that are to be used for backfilling that cannot be piled satisfactorily in the alley, easement or public thoroughfare, to a storage site and then rehaul it to the trench for backfilling.

Unless otherwise specified in the special provisions of the contract, no separate payment will be made for hauling excavated material to a storage site and rehauling back for backfilling. All costs therefor resulting to the Contractor shall be included in his contract bid items for sewer pipe in the proposal.

61–3.01A Widths of Sewer Trenches (New Section)

The maximum permissible sewer trench width from the bottom of the trench to the crown of the pipe shall be as follows:

15-inch diameter and smaller.....40 inches
18-inch diameter and larger.....1½ x inside diameter + 18 inches

In all cases, trenches must be of sufficient width to permit proper pointing of the pipe and backfilling of material along the sides of the pipe. Trench width at the surface of the ground shall be kept to the minimum amount necessary to install the pipe in a safe manner, ordinarily accomplished when sheeting is not used for controlling the width of the trench, by sloping the trench sides to a safe angle of repose for the material encountered; provided, however, that the maximum width of the trench excavation in a legally graded and improved street, alley or other right of way, where tight sheeting and/or shoring and bracing is not being placed by the Contractor, shall be a width equal to the required trench bottom width at the crown of pipe plus four (4) inches per foot trench above the pipe crown elevation. For example, for fifteen (15) foot depth of trench to the top of a fifteen (15) inch diameter pipe, the maximum top width of trench would be forty (40) inches plus fifteen (15) times four (4) inches, a total of one hundred (100) inches (8'-4").

In the event the Contractor's excavation methods are such that he elects to excavate trenches with top widths wider than as above calculated, as an alternate to the requirements of item (2) in Section 61–1 for tight sheeting, shoring and bracing, and such procedure is permitted by the Engineer, all such over-excavation of materials, surface improvements, and subsequent replacement outside the specified maximum width including consolidation of backfill shall be at the Contractor's expense. Trenches wider than the maximum specified may result in a greater load of overburden than the pipe is designed for and consequently, if the maximum width is exceeded by the Contractor without authorization of the Engineer, the Contractor, at his expense, will be required, when the pipe design strength is not adequate as determined by the Engineer, to provide a higher strength classification of pipe or Class "A" pipe bedding.

Excavation for manholes and other structures shall be sufficient to provide a minimum of twelve (12) inches between their outside surfaces and the sides of the excavation.

61–3.01B Control of Material Piled Alongside Trench (New Section)

All material excavated from trenches and piled adjacent to the trench or in a roadway or public thoroughfare shall be piled and maintained so that the toe of the slope of the material is at least two (2) feet from the edge of the trench. It shall be piled in such manner as will cause a minimum of inconvenience to public travel, and provision shall be made for merging traffic where such is necessary. Free access shall be provided to all fire hydrants, water valves and meters, and clearance shall be left to enable free flow of storm water in all gutters, other conduits and natural watercourses.

61–3.02 DEWATERING

Trenches shall be kept free of water at all times from surface, subsurface or other sources until bedding, pipe laying and backfilling has been completed to a sufficient depth for protection of the pipe against damage therefrom. Dewatering of trenches may be accomplished in any manner the Contractor may devise to an approved outlet. Water, however, shall not be permitted to drain into the newly placed sewer line during the construction period unless authorized by the Engineer.

Any damage resulting from water in trenches for any reason shall not relieve the Contractor from his responsibility for the work.

61–3.03 FOUNDATIONS AND BEDDING 95

61–3.03A Foundation Preparation

Proper preparation of foundation, placement of foundation material where required, and placement of bedding material shall precede the installation of all sewer and culvert pipe. This shall include the necessary leveling of trench bottom and the removal of all loosened material. It shall also include leveling of the foundation material to a uniform grade so that the entire length of pipe, when placed, will rest firmly upon an adequate foundation. Backfill around the pipe shall be placed in a manner to meet the requirements specified hereinafter.

61–3.03B Classification of Bedding

Bedding for sewer and drain pipes, when not of excavated material, shall be of two classes as shown on Standard Plan No. 177. Class B bedding shall be placed, unless otherwise provided in the special provisions or directed by the Engineer.

The Engineer shall have authority to change bedding classifications and the limits thereof as he may determine necessary during the progress of the work; provided, however, that changes in bedding limits, when required, shall not be less than for one hundred (100) feet.

Where unauthorized excavation occurs below that required for Class B bedding in accordance with the standard plan, and it does not exceed six (6) inches more than required for Class B bedding, the Contractor may replace the unauthorized excavation at his expense with Class B bedding material in lieu of foundation material as specified in Section 61–3.03D.

61–3.03B1 Class A Bedding

Class A bedding shall consist of a pipe cradle constructed of Class 4 (1½) portland cement concrete as specified in Section 39–3.01. The bottom of the trench shall be properly prepared before placing the concrete cradle and pipe. Cradle construction shall conform to the details on Standard Plan No. 177.

The unit contract price per linear foot for Class A bedding shall be full compensation for furnishing all labor, equipment and materials necessary to construct the concrete cradle.

61–3.03B2 Class B Bedding

Class B bedding for pipe shall conform to the cross section details shown on standard plan No. 177. The

bottom of the trench as excavated, shall be fine graded to provide uniformity of the bedding as placed under and above the bottom surface of the pipe.

The unit contract price per linear foot for Class B bedding shall be compensation in full for furnishing all labor, equipment and materials necessary to place the pipe in Class B bedding as required on the plans or directed by the Engineer.

61–3.03B3 Class C Bedding (Not used) 95

61–3.03B4 Class D Bedding (Not used) 95

61–3.03C Pipe Bedding in Solid Rock Excavation 95

61–3.03D Foundation Material

Where unsuitable excavation has been removed, necessary foundation material shall be placed and compacted to form a suitable base for the replacement of the required thickness of bedding material. Where unsuitable native foundation materials have been removed from excavations, an approved replacement foundation material shall be placed to the required thickness. Such foundation material shall conform to Type No. 3 or Type No. 5 mineral aggregate of Section 26, as called for on the plans, the special provisions or as determined by the Engineer.

Where foundation material is required, all costs for its procurement and placement shall be included in the unit contract price per cubic yard for "Foundation Material Type No....."

61–3.04 CRIBBING AND SHEETING

Unless otherwise provided in the special provisions, the Contractor shall provide all cribbing and sheeting needed to protect the work, existing property, utilities, pavement, etc., and to provide safe working conditions in the trench. Such cribbing and sheeting shall be according to the Contractor's design which shall comply with applicable local and state safety codes.

Removal of any cribbing and sheeting from the trench shall be accomplished in such a manner as to fulfill the above requirements.

Damages resulting from improper cribbing or from failure to crib shall be the sole responsibility of the Contractor. Cribbing will not be a pay item and the cost thereof shall be incidental to the construction and included in the various unit contract prices of the proposal.

61–3.05 BACKFILLING

Cribbing, sheeting or other timbering shall be removed unless specific permission is given by the Engineer to leave it in place.

In backfilling the trench, the Contractor shall take all necessary precautions to protect the pipe from any damage or shifting of the pipe. In general, backfilling shall be performed by pushing the material from the end of the trench into, along and directly over the pipe so that the material will be applied in the form of a rolling slope rather than by side filling which will damage the pipe. Backfilling from the sides of the trench will be permitted after sufficient material has first been carefully placed over the pipe to such a depth as the Engineer may approve.

Pipe placed below the water table shall be kept from floating by placing backfill material upon it, or by maintaining the water level at the bottom of the trench.

During all phases of the backfilling operations and testing as required in Section 62–3.10, the Contractor shall protect the sewer installation, provide for the maintenance of traffic as may be necessary, and provide for the safety of property and persons.

The cost of backfilling with job excavated materials, except for use of mechanical tamping and watersettling, shall be incidental to the construction and included in the various unit contract prices in the proposal. Mechanical tamping or watersettling as required, will be paid for as specified in Section 61–3.06.

61–3.06 COMPACTION OF TRENCH BACKFILL

61–3.06A Water Settling

Water settling shall be performed and payment will be made therefor as specified in Section 16.

61–3.06A1 Water for Uses Other Than Trench Backfill 96

61–3.06B Mechanical Tamper

The mechanical tamper shall meet the specifications described for it in Section 15–2.01A.

61–3.06C Vibratory Compactor 96

61–3.07 IMPORTED MATERIAL FOR TRENCH BACKFILL (Title changed for City use)

61–3.08 TOP SOIL REMOVAL AND REPLACEMENT 96

61–3.09 LAWN REMOVAL AND REPLACEMENT..... 96

61–4 MEASUREMENT AND PAYMENT 96

61–4.01 SEWER TRENCH EXCAVATION AND BACKFILL (Title changed for City use)

When a bid item "Sewer Trench Excavation and Backfill," is in the proposal, measurement for payment therefor will be made on the basis of one or both of the following units of measurements as they apply to the proposal and in the special provisions.

When no bid item for "Sewer Trench Excavation and Backfill," is included in the proposal, all necessary work and costs therefor in accordance with these specifications shall be considered as incidental to the contstruction and included in the unit bid contract prices for the pipes to be installed.

61–4.01A Measurement by the Linear Foot

When measurement and payment is called for by a unit contract price per linear foot, the trench shall be measured continuously along center line from the beginning point in the terminus and including the distances through structures, excepting however, that if excavation for structures is a bid item in connection with the structures the allowable distance along center line through the structure excavation shall be deducted from the total length of trench.

The unit contract price per linear foot for "Trench Excavation and Backfill," shall be full compensation for all labor, materials, tools and equipment required to excavate and backfill the trench in accordance with the plans and specifications; the unit contract price does not, however, include the work and expense of select backfill material, foundation material, bedding material and compaction equipment such as mechanical tampers, which if required, will become separate items for payment in the proposal.

61–4.01B Measurement by the Cubic Yard

When measurement and payment is called for by a unit contract price per cubic yard, the volume shall be computed upon the following basis for length, width and depth of trench:

Length: The entire horizontal distance in feet along the center line of the trench, including measurement through manhole or structure locations, excepting, however, that if the measurement through such structures will be deducted if the proposal carries a separate item of structure excavation that is applicable to the structures.

Bottom Width: For 24-inch pipe and smaller, the bottom width upon which excavation will be calculated

will be on the inside diameter of the pipe plus 24 inches. For pipes with inside diameter greater than 24 inches, the calculated width will be the inside diameter plus 36 inches.

Top Width: The vertical measurement, from the bottom width shall determine the top width of the trench for calculation of excavation as determined by increasing the bottom width by four (4) inches for each vertical foot of height. The vertical measurement shall be whichever is the lesser dimension arrived at from the following possible cases: (a) The vertical measurement from invert of pipe to original ground or paved surface, (b) the vertical measurement from invert of pipe to the scalped surface after removal of top soil or lawn, and (c) the measurement from invert of pipe to roadway excavation subgrade in cases where it is intended that sewer and street construction are to be performed in conjunction with each other.

Measurement will be made at intervals of not more than 50 feet along the center line of the trench, and closer if the terrain justifies.

The unit contract price per cubic yard for "Trench Excavation and Backfill," shall be full compensation for all labor, material, tools and equipment required to excavate and backfill the trench in accordance with the plans and specification; the unit contract price does, not however, include the work and expense of bank run gravel, foundation material, bedding material, water settling and compaction equipment such as tampers which, if required, will become separate items in the proposal.

61–4.02 IMPORTED MINERAL AGGREGATE FOR TRENCH BACKFILL (Title changed for City use)

Imported mineral aggregate for backfill will be measured by the cubic yard in trucks at the point of delivery. Provided however, that the maximum cubic yards placed shall not be greater than the actual volume of such material required for backfill within a trench cross section, as defined in Section 61–3.01A. The backfill material necessary for backfilling outside these limits shall be at the Contractor's expense.

61–4.03 PIPE BEDDING CLASS A 97

61–4.04 FOUNDATION MATERIAL 97

61–4.05 BEDDING MATERIAL (Not used) 97

61–4.05A Pipe Bedding Class B (New Section)

Measurement will be for the actual linear feet of Class B bedding placed for each size of pipe.

61–4.06 MECHANICAL TAMPERS AND VIBRATORY COMPACTORS 97

61–5 PAYMENT

Payment will be made for such of the following bid items as are included and shown on any particular contract:

(1) "(Size) Pipe in Place," per linear foot.
(2) "Rock Excavation," per cubic yard.
(3) "Foundation Material Type ( )," per cubic yard.
(4) "Pipe Bedding (class) (size) Pipe," per linear foot.
(5) "Mineral Aggregate for Trench Backfill, Type No.....," per cubic yard.
(6) "Mechanical Tamper," per hour.
(7) "Water," per linear foot.
(8) "Water," per M gallons.
(9) "Top Soil Removal and Replacement," per cubic yard.
(10) "Lawn Removal and Replacement," per square yard.

Section 62—Pipe Laying, Bedding and Testing

62–1 DESCRIPTION

This section covers the pipe laying, jointing and testing of sanitary sewers, storm drains and culverts. The construction of these lines shall meet the requirements herein and as shown on the plans, special provisions and standard drawings.

Any pipe or appurtenance which inadvertently or otherwise has been laid or jointed in non-accordance with the specifications and special provisions shall, upon direction of the Engineer at any time before final acceptance of the contract or before expiration of the guaranty period, be repaired or be removed and replaced at the expense of the Contractor to the requirements of the contract.

No connections shall be made to a sewer or drain pipe without authorization by the Engineer. All connections when authorized, unless otherwise directed by the Engineer, shall be made through tee or wye openings provided integral with the pipe as specified in Section 62–3.11.

62–2 MATERIALS 97

62–3 CONSTRUCTION DETAILS 97

62–3.01 SURVEY LINE AND GRADE

Survey line and grade control hubs will be provided by the Engineer in a manner consistent with accepted practices, Section 5.06.

The Contractor shall constantly check line and grade and in the event they do not meet specified limits described hereinafter, the work shall be immediately stopped, the Engineer notified, and the cause remedied before proceeding with the work.

62–3.02 SEWER PIPE LAYING

Laying of sewer pipe shall be accomplished to line and grade in the trench only after it has been dewatered and the foundation and/or bedding has been prepared in accordance with Section 61. Mud, silt, gravel and other foreign material shall be kept out of the pipe and off the jointing surfaces.

All pipe laid shall be retained in position by mechanical means or otherwise, as approved by the Engineer, so as to maintain alignment and joint closure until sufficient backfill has been completed to adequately hold the pipe in place. All pipe shall be laid to conform to the prescribed line and grade shown on the plans, within the limits that follow.

Pipe inverts of successive joints may deviate from each other a maximum of one-fourth (¼) inch for pipes eighteen (18) inches diameter and smaller; and three-eighths (⅜) inch for pipe larger than eighteen (18) inches. Final line and grade of pipe at any joint shall be within one-half (½) inch of true line and grade for pipe eighteen (18) inches diameter and smaller; and three-fourths (¾) inch for pipe larger than eighteen (18) inches. No reverse grade shall be allowed.

The sewer pipe, unless otherwise approved by the Engineer, shall be laid upgrade from point of connection on the existing sewer or from a designated starting point. The sewer pipe shall be installed with the bell end forward or upgrade, unless approved otherwise. When pipe laying is not in progress the forward end of the pipe shall be kept tightly closed with an approved temporary plug.

62–3.03 CULVERT PIPE 97

62–3.04 DEWATERING

Trenches shall be kept free of water at all times from surface, subsurface or other sources until bedding, pipe laying and backfilling has been completed to a sufficient depth for protection of the pipe against damage therefrom. Dewatering of trenches may be accomplished in any

bottom of the trench as excavated shall be graded properly to provide a uniform depth of bedding material below the outside diameter of the pipe.

The unit contract price per linear foot for Class B bedding shall be compensation in full for furnishing all labor, equipment and materials necessary to place the pipe in Class B bedding as required on the plans or directed by the Engineer.

61–3.03B3 Class C Bedding (Not used)..... 95

61–3.03B4 Class D Bedding (Not used)..... 95

61–3.03C Pipe Bedding in Solid Rock Excavation..... 95

61–3.03D Foundation Material

Where unsuitable excavation has been removed, necessary foundation material shall be placed and compacted to form a suitable base for the replacement of the required thickness of bedding material. Where unsuitable native foundation materials have been removed from excavations, an approved replacement foundation material shall be placed to the required thickness. Such foundation material shall conform to Type No. 3 or Type No. 5 mineral aggregate of Section 26, as called for on the plans, the special provisions or as determined by the Engineer.

Where foundation material is required, all costs for its procurement and placement shall be included in the unit contract price per cubic yard for "Foundation Material Type No....."

61–3.04 CRIBBING AND SHEETING

Unless otherwise provided in the special provisions, the Contractor shall provide all cribbing and sheeting needed to protect the work, existing property, utilities, pavement, etc., and to provide safe working conditions in the trench. Such cribbing and sheeting shall be according to the Contractor's design which shall comply with applicable local and state safety codes.

Removal of any cribbing and sheeting from the trench shall be accomplished in such a manner as to fulfill the above requirements.

Damages resulting from improper cribbing or from failure to crib shall be the sole responsibility of the Contractor. Cribbing will not be a pay item and the cost thereof shall be incidental to the construction and included in the various unit contract prices of the proposal.

61–3.05 BACKFILLING

Cribbing, sheeting or other timbering shall be removed unless specific permission is given by the Engineer to leave it in place.

In backfilling the trench, the Contractor shall take all necessary precautions to protect the pipe from any damage or shifting of the pipe. In general, backfilling shall be performed by pushing the material from the end of the trench into, along and directly over the pipe so that the material will be applied in the form of a rolling slope rather than by side filling which will damage the pipe. Backfilling from the sides of the trench will be permitted after sufficient material has first been carefully placed over the pipe to such a depth as the Engineer may approve.

Pipe placed below the water table shall be kept from floating by placing backfill material upon it, or by maintaining the water level at the bottom of the trench.

During all phases of the backfilling operations and testing as required in Section 62–3.10, the Contractor shall protect the sewer installation, provide for the maintenance of traffic as may be necessary, and provide for the safety of property and persons.

The cost of backfilling with job excavated materials, except for use of mechanical tamping and watersettling, shall be incidental to the construction and included in the various unit contract prices in the proposal. Mechanical tamping or watersettling as required, will be paid for as specified in Section 61–3.06.

61–3.06 COMPACTION OF TRENCH BACKFILL..... 96

61–3.06A Water Settling

Water settling shall be performed and payment will be made therefor as specified in Section 16.

61–3.06A1 Water for Uses Other Than Trench Backfill..... 96

61–3.06B Mechanical Tamper

The mechanical tamper shall meet the specifications described for it in Section 15–2.01A.

61–3.06C Vibratory Compactor 96

61–3.07 IMPORTED MATERIAL FOR TRENCH BACKFILL (Title changed for City use)

Wherever a trench is excavated in paved roadway, sidewalk or other area where minor settlement would be detrimental and where the native excavated material is not suitable for compaction as backfill, the trench shall be backfilled with Type No. 10 or Type No. 11 mineral aggregate as specified in Section 26, compacted into place as the Engineer may direct. Payment for Type No. 10 or Type No. 11 backfill will be made at the unit bid contract price therefor. Payment for mechanical tamping or watersettling as required will be made as provided in Section 61–3.06.

61–3.08 TOP SOIL REMOVAL AND REPLACEMENT 96

61–3.09 LAWN REMOVAL AND REPLACEMENT..... 96

61–4 MEASUREMENT AND PAYMENT..... 96

61–4.01 SEWER TRENCH EXCAVATION AND BACKFILL (Title changed for City use)

When a bid item "Sewer Trench Excavation and Backfill," is in the proposal, measurement for payment therefor will be made on the basis of one or both of the following units of measurements as they apply to the proposal and in the special provisions.

When no bid item for "Sewer Trench Excavation and Backfill" is included in the proposal, all work and costs therefor to excavate trenches to the grades shown on the proposal plans and backfill with excavated materials shall be considered as incidental to the construction.

61–4.01A Measurement by the Linear Foot

When measurement and payment is called for by a unit contract price per linear foot, the trench shall be measured continuously along center line from the beginning point in the terminus and including the distances through structures, excepting however, that if excavation for structures is a bid item in connection with the structures the allowable distance along center line through the structure excavation shall be deducted from the total length of trench.

The unit contract price per linear foot for "Sewer Trench Excavation and Backfill (pipe size)" shall be full compensation for all labor, materials, tools and equipment required to excavate and backfill the trench in accordance with the plans and specifications. The unit contract price does not, however, include the work and expense of select backfill material, foundation material, bedding material and compaction equipment such as mechanical tampers, which, if required, will be separate bid items for payment in the contract.

61–4.01B Measurement by the Cubic Yard

When measurement and payment is called for by a unit contract price per cubic yard, the volume shall be computed upon the following basis for length, width and depth of trench:

Length: The entire horizontal distance in feet along the center line of the trench, including measurement through manhole or structure locations, excepting, however, that the measurement through such structures will be deducted if the proposal carries a separate item of structure excavation that is applicable to the structures.

Bottom Width: For 24-inch pipe and smaller, the bottom width upon which excavation will be calculated

will be on the inside diameter of the pipe plus 24 inches. For pipes with inside diameter greater than 24 inches, the calculated width will be the inside diameter plus 36 inches.

Top Width: The vertical measurement, from the bottom width shall determine the top width of the trench for calculation of excavation as determined by increasing the bottom width by four (4) inches for each vertical foot of height. The vertical measurement shall be whichever is the lesser dimension arrived at from the following possible cases: (a) The vertical measurement from invert of pipe to original ground or paved surface, (b) the vertical measurement from invert of pipe to the scalped surface after removal of top soil or lawn, and (c) the measurement from invert of pipe to roadway excavation subgrade in cases where it is intended that sewer and street construction are to be performed in conjunction with each other.

Measurement will be made at intervals of not more than fifty (50) feet along the center line of the trench, and closer if the terrain justifies.

The unit contract price per cubic yard for "Sewer Trench Excavation and Backfill (pipe size)" shall be full compensation for all labor, material, tools and equipment required to excavate and backfill the trench in accordance with the plans and specification. The unit contract price does not, however, include the work and expense of bank run gravel, foundation material, bedding material and compaction equipment such as mechanical tampers, which, if required, will be separate bid items for payment in the contract.

61–4.02 IMPORTED MINERAL AGGREGATE FOR TRENCH BACKFILL (Title changed for City use)

Imported mineral aggregate for backfill will be measured by the cubic yard in trucks at the point of delivery; provided, however, that the maximum cubic yards placed shall not be greater than the actual volume of such material required for backfill within a trench cross section, as defined in Section 61–3.01A. The backfill material necessary for blackfilling outside these limits shall be at the Contractor's expense.

61–4.03 PIPE BEDDING CLASS A..... 97

61–4.04 FOUNDATION MATERIAL 97

61–4.05 BEDDING MATERIAL (Not used)..... 97

61–4.05A Pipe Bedding Class B (New Section)

Measurement will be for the actual linear feet of Class B bedding placed for each size of pipe.

61–4.06 MECHANICAL TAMPERS AND VIBRATORY COMPACTORS 97

61–5 PAYMENT

Payment will be made for such of the following bid items as are included and shown in any particular contract:

(1) "Sewer Trench Excavation and Backfill (pipe size)," per linear foot.
(2) "Sewer Trench Excavation and Backfill (pipe size)," per cubic yard.
(3) "Rock Excavation," per cubic yard.
(4) "Foundation Material Type ( )," per cubic yard.
(5) "Pipe Bedding (class) (size) Pipe," per linear foot.
(6) "Mineral Aggregate for Trench Backfill, Type No.....," per cubic yard.
(7) "Mechanical Tamper," per hour.
(8) "Hydrant Water," per linear foot.
(9) "Hauled Water," per M gallons.
(10) "Top Soil Removal and Replacement," per cubic yard.
(11) "Lawn Removal and Replacement," per square yard.

Section 62—Pipe Laying, Bedding and Testing

62–1 DESCRIPTION

This section covers the pipe laying, jointing and testing of sanitary sewers, storm drains and culverts. The construction of these lines shall meet the requirements herein and as shown on the plans, special provisions and standard drawings.

Any pipe or appurtenance which inadvertently or otherwise has been laid or jointed in non-accordance with the specifications and special provisions shall, upon direction of the Engineer at any time before final acceptance of the contract or before expiration of the guaranty period, be repaired or be removed and replaced at the expense of the Contractor to the requirements of the contract.

No connections shall be made to a sewer or drain pipe without authorization by the Engineer. All connections when authorized, unless otherwise directed by the Engineer, shall be made through tee or wye openings provided integral with the pipe as specified in Section 62–3.11.

62–2 MATERIALS 97

62–3 CONSTRUCTION DETAILS 97

62–3.01 SURVEY LINE AND GRADE

Survey line and grade control hubs will be provided by the Engineer in a manner consistent with accepted practices, Section 5.06.

The Contractor shall constantly check line and grade and in the event they do not meet specified limits described hereinafter, the work shall be immediately stopped, the Engineer notified, and the cause remedied before proceeding with the work.

62–3.02 SEWER PIPE LAYING

Laying of sewer pipe shall be accomplished to line and grade in the trench only after it has been dewatered and the foundation and/or bedding has been prepared in accordance with Section 61. Mud, silt, gravel and other foreign material shall be kept out of the pipe and off the jointing surfaces.

All pipe laid shall be retained in position by mechanical means or otherwise, as approved by the Engineer, so as to maintain alignment and joint closure until sufficient backfill has been completed to adequately hold the pipe in place. All pipe shall be laid to conform to the prescribed line and grade shown on the plans, within the limits that follow.

Pipe inverts of successive joints may deviate from each other a maximum of one-fourth (¼) inch for pipes eighteen (18) inches diameter and smaller; and three-eighths (⅜) inch for pipe larger than eighteen (18) inches. Final line and grade of pipe at any joint shall be within one-half (½) inch of true line and grade for pipe eighteen (18) inches diameter and smaller; and three-fourths (¾) inch for pipe larger than eighteen (18) inches. No reverse grade shall be allowed.

The sewer pipe, unless otherwise approved by the Engineer, shall be laid upgrade from point of connection on the existing sewer or from a designated starting point. The sewer pipe shall be installed with the bell end forward or upgrade, unless approved otherwise. When pipe laying is not in progress the forward end of the pipe shall be kept tightly closed with an approved temporary plug.

62–3.03 CULVERT PIPE 97

62–3.04 DEWATERING

Trenches shall be kept free of water at all times from surface, subsurface or other sources until bedding, pipe laying and backfilling has been completed to a sufficient depth for protection of the pipe against damage therefrom. Dewatering of trenches may be accomplished in any

manner the Contractor may devise to an approved outlet. Water, however, shall not be permitted to drain into the newly placed sewer line during the construction period unless authorized by the Engineer.

Any damage resulting from water in trenches for any reasons shall not relieve the Contractor from his responsibility for the work.

62–3.05 BEDDING

The bedding for pipe shall be prepared so that the entire length of the pipe will have full bearing. No blocking shall be used to adjust the pipe to grade except when used with Class A Bedding of Section 61–3.03B1.

62–3.06 PLUGS FOR TEES, WYES, ENDS OF CONNECTIONS (Title changed for City use) 98

62–3.07 PIPE MARKINGS 98

62–3.08 PIPE JOINTING

Type of joints to be used on a particular project shall be of the flexible gasket type unless otherwise shown on the plans or specified in the special provisions.

All pipe and jointing shall be subject to the tests specified in Section 62–3.10.

62–3.08A Hand Mortared Joints 98

62–3.08B Gasket Type Joints 98

62–3.08C Jointing of Dissimilar Pipes 98

62–3.09 SEWER AND DRAIN LINE CONNECTIONS (Title changed for City use)

Excavation and backfilling for connections to sewer and drain pipe lines shall be the same as specified in Section 61. Connections shall have the same foundation requirements as specified under Section 61–3.03.

62–3.09A Side Sewer Connections 98

62–3.09B Manhole Connections 98

62–3.10 TESTING FOR ACCEPTANCE

Unless otherwise porvided in the special provisions of the proposal all sanitary sewers, storm drains and side sewers after construction and before acceptance shall pass a satisfactory test for watertightness. The test shall be made after bedding backfill has been completed to a minimum required depth of six (6) inches above the crown of the pipe across the full width of excavation, or the final backfilling is completed. The test shall consist of subjecting completed sections of sanitary or storm drain pipe, including connected side sewers or other connections thereto, between manholes or other approved points to a hydrostatic exfiltration leakage test, as specified in Section 62–3.10A.

62–3.10A Exfiltration Test

Prior to making exfiltration leakage tests the Contractor may fill the pipe with clear water to permit normal absorption into the pipe walls, provided however, that after so filling the pipe with water he shall complete the leakage test within twenty-four (25) hours after such filling. When under test the leakage allowable shall comply with the provisions that follow.

Leakage shall be no more than five-tenths (0.5) gallon per hour per inch of diameter per one hundred (100) feet of sewer pipe, with a minimum test pressure of six (6) feet of water column above the crown at the upper end of the pipe or above the active ground water table, whichever is higher as determined by the Engineer. The length of pipe tested shall be limited so that the pressure on the invert of the lower end of the section tested shall not exceed sixteen (16) feet of water column. For each increase in pressure of two feet above a basic six feet measured above the crown at the lower end of the test station, the allowable leakage shall be increased by 10%, tabulated as follows:

Allowable Leakage in Gal./100 Linear Feet/Hr.
Head Above Crown on Lower End of Test Section

Pipe Size (Inches)	6 Ft.	8 Ft.	10 Ft.	12 Ft.	14 Ft.	16 Ft.
4	2.0	2.2	2.4	2.6	2.8	3.0
6	3.0	3.3	3.6	3.9	4.2	4.5
8	4.0	4.4	4.8	5.2	5.6	6.0
10	5.0	5.5	6.0	6.5	7.0	7.5
12	6.0	6.6	7.2	7.8	8.4	9.0
15	7.5	8.2	9.0	9.8	10.5	11.2
18	9.0	9.9	10.8	11.7	12.6	13.5
21	10.5	11.6	12.6	13.6	14.7	15.8
24	12.0	13.2	14.4	15.6	16.8	18.0
27	13.5	14.9	16.2	17.6	18.9	20.2
30	15.0	16.5	18.0	19.5	21.0	22.5
36	18.0	19.8	21.6	23.4	25.2	27.0
42	21.0	23.1	25.2	27.3	29.4	31.5
48	24.0	26.4	28.8	31.2	33.6	36.0
54	27.0	29.7	32.4	35.1	37.8	40.5
60	30.0	33.0	36.0	39.0	42.0	45.0
72	36.0	39.6	43.2	46.8	50.4	54.0

Where the calculated leakage allowable is exceeded but is not more than a maximum of one hundred-forty per cent (140%) the Contractor, at his expense, will be permitted at his option to repair the section failing to pass the leakage test by suitable measures to pass a satisfactory leakage test without removing and relaying the pipe.

Should the calculated allowable leakage be exceeded by more than one hundred-forty per cent (140%), the Contractor, at his expense, shall remove the pipe entirely and relay the pipe section to conform to the proposal requirements to pass a successful leakage test.

Testing of storm drains shall be the same as for sanitary sewers, except that the calculated leakage allowable for acceptance shall be two (2) times that on a sanitary sewer.

The Contractor shall furnish all equipment, materials and labor necessary to making the leakage tests. Any arrangement of test equipment which will provide accurate means of measurement will be approved by the Engineer. The leakage test shall be made by the Contractor in the presence of the Engineer, after sections of pipe to be tested have first been filled with water and allowed to stand six (6) hours or for such additional length of time necessary to allow for absorption by the pipe or other masonry of the pipe line.

Water for making the first hydrostatic leakage test when obtained from Seattle Water Department mains for the construction in accordance with Section 16, will be furnished at no cost to the Contractor; payment therefor will be made from the improvement fund. Water required by the Contractor for retesting, as a result of failure to pass a successful test due to faulty workmanship or materials, shall be at his expense.

62–3.10B Infiltration Test

Infiltration tests shall not be allowed unless provided for in the special provisions of the contract.

62–3.10C Other Test Allowances 99

62–3.10C1 Alternate Exfiltration Test, Large Pipe (New Section)

When placing large diameter pipe, thirty-six (36) inches and larger, the Contractor may at his option test the pipe for acceptance, joint by joint with suitable equipment approved by the Engineer. Joint testing when approved, shall proceed along with the pipe laying operation at a distance not less than four (4) pipe joints back from the actual laying and jointing operations, after backfill has been completed to the required height above the crown of the pipe in accordance with Section 62–3.10A.

Allowable leakage for acceptance when testing joint by joint as described, shall be measured in gallons per minute per joint calculated by dividing the allowable leakage determined in accordance with Section 62–3.10A for one hundred feet of the pipe by sixty times the number of pipe joints in the one hundred foot section.

62–3.10D Payment for Tests

Payment for making hydrostatic exfiltration leakage tests, when successful, will be a separate pay item per linear foot in the proposal for the size of pipe tested. Such payment shall include the work of cleaning for testing and the furnishing and installation of temporary caps and temporary plugs necessary for making the test. No separate payment will be made for tests which are not satisfactory.

62–3.11 TEES AND WYES (New Section)

Tees and wyes are sewer pipes fabricated with openings in the walls through which side sewers, Section 66; catch basins and inlets, Section 64, or other approved connections are made to the main sewer pipe. Tees or wyes shall be placed when laying pipe as required at the locations shown on the plans, or otherwise directed by the Engineer. The opening of a tee or wye shall be positioned at approximately thirty degrees (30°) above the horizontal diameter of the pipe, unless a different inclination is directed by the Engineer.

The open ends of tees or wyes when not immediately used, shall be sealed with a flexibl jointed plug as required in Section 60–3.06 to prevent leakage or other foreign material from the main pipe. The plug shall be securely fastened to withstand the required acceptance test of Section 62–3.10.

Payment for tees and wyes will be made on a per each basis, which payment will be in addition to payment for the main pipe.

62–4 MEASUREMENT

Measurement for payment shall be by the linear foot of pipe laid and tested and shall be along the pipe through the tees and fittings. Measurements shall be from center to center of standard types of manholes or to inside face of structures, and shall be taken to the nearest one-tenth (0.1) foot.

Measurement for tees and wyes shall be per each for each size used.

Measurement for leakage tests shall be as specified in Section 62–3.10C1 or Section 62–3.10D, whichever applies in the proposal.

62–5 PAYMENT

Payment will be made for such of the following bid items as are included and shown on any particular contract:

(1) "(Size) Pipe in Place," per linear foot.
(2) "Tees (size)," per each.
(3) "Wyes (size)," per each.
(4) "Exfiltration Test (size of pipe)," per linear foot.

Section 63—Manholes for Storm and Sanitary Sewers

63–1 DESCRIPTION

Standard manholes are of eight (8) types and may be constructed with standard precast concrete sections, concrete masonry blocks or brick, clay brick or cast-in-place concrete, all in accordance with the standard plans therefor and these specifications, unless the choice of materials may be limited by the special provisions of the proposal. The various types of manholes are classified for type as follows:

Type 130 and 131 manholes are constructed in accordance with the details shown on Standard Plans Nos. 130 and 131, respectively. They are manholes constructed with sewers for pipe sizes less than twenty-four (24) inches in diameter.

Type 132 manholes are shown on Standard Plan No. 132 and are used with pipe diameters twenty-four (24) inches to thirty-six (36) inches in diameter.

Type 133 manholes are shown on Standard Plan No. 133 and are constructed with sewers for pipe sizes twenty-four (24) inches to forty-two (42) inches in diameter.

Type 134 and 135 manholes are constructed in accordance with the details shown on Standard Plans Nos. 134 and 135, respectively, and are constructed for shallow depth sewers of any size pipe up to forty-two (42) inches in diameter.

Type 136 manholes, Standard Plan No. 136, are manholes for large diameter sewers forty-eight (48) inches in diameter and larger.

Type 137 manholes, Standard Plan No. 137, are standard for connecting a high level sewer pipe to a lower level sewer with a vertical drop pipe.

All the above numbered types of manholes when constructed complete, shall include the cast iron manhole cover placed at the top. In general, the design of such manhole cover casting may be any of three designs as shown on Standard Plans Nos., 139, 140 and 141, respectively, and the specific design to be installed will be indicated by the specified type of manhole.

For example, for a Type 130 manhole, which of the three design manhole cover castings to be included therewith would be indicated on the proposal plans and in the proposal schedule as follows:

(1) Type 130 Manhole
This designation would be for a manhole constructed in accordance with Standard Plan No. 130 with an eighteen (18) inch diameter opening, cast iron manhole cover as detailed on Standard Plan No. 139 for a ring casting nine and one-fourth (9¼) inches in heighth from top to bottom. The cover would be of the non-locking type and would be labeled "SEWER" or "DRAIN," whichever applied for the manhole location.

(2) Type 130A Manhole
This designation for a Type 130 manhole would be in all respects the same as specified above for (1), except the cast iron cover castings would conform to the design shown on Standard Plan No. 140 having a twenty-four (24) inch diameter opening.

(3) Type 130B Manhole
This designation for a Type 130 manhole would be the same as specified above for (1) except the cover castings would conform to the design shown on Standard Plan No. 141 for a twenty-four (24) inch diameter opening.

Should any of the above (1), (2) and (3) manholes be required to have locking type covers, such would be indicated by adding "L" to manhole designation, i.e., Type 130L, Type 130AL and Type 130BL, respectively. The locking device would conform to the details shown on Standard Plan No. 144 for Type 130L and Type 130AL manholes, and Standard Plan No. 143 for a Type 130BL manhole.

Other variations for manholes (1), (2) and (3) for the furnishing of a nodular iron cover instead of cast iron, and for requiring a shallow four (4) inch height ring casting instead of a nine and one-fourth (9¼) inch height. Whichever is required would be indicated by the letter "N" for a nodular iron cover, or the letter "S" for a shallow ring casting appearing after the manhole type number specified. For example, to specify a nodular iron cover and a shallow ring casting for a Type 130A manhole as described, it would be indicated by specifying a Type 130ANS manhole; for a nodular iron cover only, Type 130AN manhole; or for a shallow ring casting only, Type 130AS manhole. For locking type covers, Type 130ALNS, Type 130ALN and Type 130ALS, respectively would apply.

The above sequence of letters appearing as above after any manhole, type number 131 to 137 inclusive, shall specify the cover castings to be included and installed therewith.

Nodular iron for manhole covers, when specified by the letter "N," shall conform to ASTM Designation A339, Grade 60-45-10.

63–2 MATERIALS 99

63–2.01 REINFORCED CONCRETE 99

leakage determined in accordance with Section 62–3.10A for one hundred feet of pipe by sixty times the number of pipe joints in the one hundred foot section.

62–3.10D Payment for Tests

Payment for making hydrostatic exfiltration leakage tests, when successful, will be a separate pay item per linear foot in the proposal for the size of pipe tested. Such payment shall include the work of cleaning for testing and the furnishing and installation of temporary caps and temporary plugs necessary for making the test. No separate payment will be made for tests which are not satisfactory.

62–3.11 TEES AND WYES (New Section)

Tees and wyes are sewer pipes fabricated with openings in the walls through which side sewers, Section 66, catch basins and inlets, Section 64, or other approved connections are made to the main sewer pipe. Tees or wyes shall be placed when laying pipe as required at the locations shown on the plans, or otherwise directed by the Engineer. The opening of a tee or wye shall be positioned at approximately thirty degrees (30°) above the horizontal diameter of the pipe, unless a different inclination is directed by the Engineer.

The open ends of tees or wyes, when not immediately used, shall be sealed with a flexible jointed plug as required in Section 62–3.06 to prevent leakage or other foreign material from the main pipe. The plug shall be securely fastened to withstand the required acceptance test of Section 62–3.10.

Payment for tees and wyes will be made on a per each basis, which payment will be in addition to payment for the main pipe.

62–4 MEASUREMENT

Measurement for payment shall be by the linear foot of pipe laid and tested and shall be along the pipe through the tees and fittings. Measurement shall be from center to center of standard types of manholes or to inside face of structures, and shall be taken to the nearest one-tenth (0.1) foot.

Measurement for tees and wyes shall be per each for each size used.

Measurement for payment of leakage tests shall be as specified for the pipe installed.

62–5 PAYMENT

Payment will be made for such of the following bid items as are included and shown on any particular contract:

(1) "(Size) Pipe in Place," per linear foot.
(2) "Tees (size)," per each.
(3) "Wyes (size)," per each.
(4) "Exfiltration Test (size of pipe)," per linear foot.

Section 63—Manholes for Storm and Sanitary Sewers

63–1 DESCRIPTION

Standard manholes may be constructed with standard precast concrete sections, concrete masonry blocks or bricks, clay brick or concrete cast-in-place in accordance with these specifications, unless the choice of materials may be limited by the special provisions of the contract.

Manholes are identified by their standard plan number and when constructed complete in place, shall include the cast iron ring and cover casting. The design of the ring and cover casting may be any of three designs as shown on Standard Plans Nos. 139, 140 and 141, respectively, and the specific design to be installed will be indicated by the specified type of manhole.

For example, for a Type 130 manhole, which of the three design manhole cover castings to be included therewith would be indicated on the proposal plans and in the proposal schedule as follows:

(1) Type 130 Manhole
This designation would be for a manhole constructed in accordance with Standard Plan No. 130 with an eighteen (18) inch diameter opening, cast iron manhole cover as detailed on Standard Plan No. 139 for a ring casting nine and one-fourth (9¼) inches in height from top to bottom. The cover would be of the non-locking type and would be labeled "SEWER" or "DRAIN," whichever applied for the manhole location.

(2) Type 130A Manhole
This designation for a Type 130 manhole would be in all respects the same as specified above for (1), except the cast iron cover castings would conform to the design shown on Standard Plan No. 140 having a twenty-four (24) inch diameter opening.

(3) Type 130B Manhole
This designation for a Type 130 manhole would be the same as specified above for (1), except the cover castings would conform to the design shown on Standard Plan No. 141 for a twenty-four (24) inch diameter opening.

Should any of the above (1), (2) and (3) manholes be required to have locking type covers, such would be indicated by adding "L" to manhole designation, i.e., Type 130L, Type 130AL and Type 130BL, respectively. The locking device would conform to the details shown on Standard Plan No. 144 for Type 130L and Type 130AL manholes, and Standard Plan No. 143 for a Type 130BL manhole.

Other variations for manholes (1), (2) and (3) would be for the furnishing of a nodular iron cover instead of cast iron, and for requiring a shallow four (4) inch height ring casting instead of nine and one-fourth (9¼) inch height. Whichever is required would be indicated by the letter "N" for a nodular iron cover, or the letter "S" for a shallow ring casting appearing after the manhole type number specified. For example, to specify a nodular iron cover and a shallow ring casting for a Type 130A manhole as described, it would be indicated by specifying a Type 130ANS manhole; for a nodular iron cover only, Type 130AN manhole; or for a shallow ring casting only, Type 130AS manhole. For locking type covers, Type 130ALNS, Type 130ALN and Type 130ALS, respectively, would apply.

The above sequence of letters appearing as above after any manhole, type number 131 to 137, inclusive, shall specify the cover castings to be included and installed therewith.

63–2 MATERIALS 99
63–2.01 REINFORCED CONCRETE 99
63–2.01A Cement 99
63–2.01B Wire Fabric Reinforcement 99
63–2.01C Bar Reinforcement 99
63–2.01D Aggregates 99
63–2.01E Mixture 99
63–2.01F Curing 100
63–2.01G Strength 100
63–2.02 STEPS 100

leakage determined in accordance with Section 62–3.10A for one hundred feet of the pipe by sixty times the number of pipe joints in the one hundred foot section.

62–3.10D Payment for Tests

Payment for making hydrostatic exfiltration leakage tests, when successful, will be a separate pay item per linear foot in the proposal for the size of pipe tested. Such payment shall include the work of cleaning for testing and the furnishing and installation of temporary caps and temporary plugs necessary for making the test. No separate payment will be made for tests which are not satisfactory.

62–3.11 TEES AND WYES (New Section)

Tees and wyes are sewer pipes fabricated with openings in the walls through which side sewers, Section 66; catch basins and inlets, Section 64, or other approved connections are made to the main sewer pipe. Tees or wyes shall be placed when laying pipe as required at the locations shown on the plans, or otherwise directed by the Engineer. The opening of a tee or wye shall be positioned at approximately thirty degrees (30°) above the horizontal diameter of the pipe, unless a different inclination is directed by the Engineer.

The open ends of tees or wyes when not immediately used, shall be sealed with a flexibl jointed plug as required in Section 60–3.06 to prevent leakage or other foreign material from the main pipe. The plug shall be securely fastened to withstand the required acceptance test of Section 62–3.10.

Payment for tees and wyes will be made on a per each basis, which payment will be in addition to payment for the main pipe.

62–4 MEASUREMENT

Measurement for payment shall be by the linear foot of pipe laid and tested and shall be along the pipe through the tees and fittings. Measurements shall be from center to center of standard types of manholes or to inside face of structures, and shall be taken to the nearest one-tenth (0.1) foot.

Measurement for tees and wyes shall be per each for each size used.

Measurement for leakage tests shall be as specified in Section 62–3.10C1 or Section 62–3.10D, whichever applies in the proposal.

62–5 PAYMENT

Payment will be made for such of the following bid items as are included and shown on any particular contract:

(1) "(Size) Pipe in Place," per linear foot.
(2) "Tees (size)," per each.
(3) "Wyes (size)," per each.
(4)"Exfiltration Test (size of pipe)," per linear foot.

Section 63—Manholes for Storm and Sanitary Sewers

63–1 DESCRIPTION

Standard manholes are of eight (8) types and may be constructed with standard precast concrete sections, concrete masonry blocks or brick, clay brick or cast-in-place concrete, all in accordance with the standard plans therefor and these specifications, unless the choice of materials may be limited by the special provisions of the proposal. The various types of manholes are classified for type as follows:

Type 130 and 131 manholes are constructed in accordance with the details shown on Standard Plans Nos. 130 and 131, respectively. They are manholes constructed with sewers for pipe sizes less than twenty-four (24) inches in diameter.

Type 132 manholes are shown on Standard Plan No. 132 and are used with pipe diameters twenty-four (24) inches to thirty-six (36) inches in diameter.

Type 133 manholes are shown on Standard Plan No. 133 and are constructed with sewers for pipe sizes twenty-four (24) inches to forty-two (42) inches in diameter.

Type 134 and 135 manholes are constructed in accordance with the details shown on Standard Plans Nos. 134 and 135, respectively, and are constructed for shallow depth sewers of any size pipe up to forty-two (42) inches in diameter.

Type 136 manholes, Standard Plan No. 136, are manholes for large diameter sewers forty-eight (48) inches in diameter and larger.

Type 137 manholes, Standard Plan No. 137, are standard for connecting a high level sewer pipe to a lower level sewer with a vertical drop pipe.

All the above numbered types of manholes when constructed complete, shall include the cast iron manhole cover placed at the top. In general, the design of such manhole cover casting may be any of three designs as shown on Standard Plans Nos., 139, 140 and 141, respectively, and the specific design to be installed will be indicated by the specified type of manhole.

For example, for a Type 130 manhole, which of the three design manhole cover castings to be included therewith would be indicated on the proposal plans and in the proposal schedule as follows:

(1) Type 130 Manhole
This designation would be for a manhole constructed in accordance with Standard Plan No. 130 with an eighteen (18) inch diameter opening, cast iron manhole cover as detailed on Standard Plan No. 139 for a ring casting nine and one-fourth (9¼) inches in heighth from top to bottom. The cover would be of the non-locking type and would be labeled "SEWER" or "DRAIN," whichever applied for the manhole location.

(2) Type 130A Manhole
This designation for a Type 130 manhole would be in all respects the same as specified above for (1), except the cast iron cover castings would conform to the design shown on Standard Plan No. 140 having a twenty-four (24) inch diameter opening.

(3) Type 130B Manhole
This designation for a Type 130 manhole would be the same as specified above for (1) except the cover castings would conform to the design shown on Standard Plan No. 141 for a twenty-four (24) inch diameter opening.

Should any of the above (1), (2) and (3) manholes be required to have locking type covers, such would be indicated by adding "L" to manhole designation, i.e., Type 130L, Type 130AL and Type 130BL, respectively. The locking device would conform to the details shown on Standard Plan No. 144 for Type 130L and Type 130AL manholes, and Standard Plan No. 143 for a Type 130BL manhole.

Other variations for manholes (1), (2) and (3) for the furnishing of a nodular iron cover instead of cast iron, and for requiring a shallow four (4) inch height ring casting instead of a nine and one-fourth (9¼) inch height. Whichever is required would be indicated by the letter "N" for a nodular iron cover, or the letter "S" for a shallow ring casting appearing after the manhole type number specified. For example, to specify a nodular iron cover and a shallow ring casting for a Type 130A manhole as described, it would be indicated by specifying a Type 130ANS manhole; for a nodular iron cover only, Type 130AN manhole; or for a shallow ring casting only, Type 130AS manhole. For locking type covers, Type 130ALNS, Type 130ALN and Type 130ALS, respectively would apply.

The above sequence of letters appearing as above after any manhole, type number 131 to 137 inclusive, shall specify the cover castings to be included and installed therewith.

Nodular iron for manhole covers, when specified by the letter "N," shall conform to ASTM Designation A339, Grade 60-45-10.

63–2 MATERIALS 99
63–2.01 REINFORCED CONCRETE 99

63–2.01A Cement 99

63–2.01B Wire Fabric Reinforcement 99

63–2.01C Bar Reinforcement 99

63–2.01D Aggregates 99

63–2.01E Mixture 99

63–2.01F Curing 100

63–2.01G Strength 100

63–2.02 STEPS 100

63–2.02A Aluminum Steps

Aluminum steps shall be forged of 615-T6 alloy having a minimum tensile strength of 38,000 psi. The cross section shall be not less than ¾-inch wide by ⅞-inch deep with two non-skid grooves not to exceed ⅛-inch deep and ⅛-inch wide. Pattern and dimensions shall conform with Standard Plan No. 138.

63–2.02B Galvanized Deformed Bar Steps

Galvanized deformed bar steps shall be one (1) inch diameter deformed bar conforming to ASTM A 15, intermediate or standard grade, hot bent and galvanized after bending. For bending, the temperature shall be at least 1600° F. Galvanizing shall conform to ASTM A 123. Step dimensions and pattern shall conform with Standard Plan No. 138.

63–2.03 LADDERS 100

63–2.04 MORTAR 100

63–2.04A Mortar for Jointing 100

63–2.04B Mortar for Plaster-coating 100

63–2.05 CONCRETE MASONRY UNITS 100

63–2.06 CONCRETE BRICK 100

63–2.07 CLAY BRICK 100

63–2.08 MANHOLE RING AND COVER CASTINGS (Title changed for City use)

Cast iron, rings, frames, covers and grates shall conform to the details shown on Standard Plans Nos. 139, 140 and 141.

Covers shall have the word "SEWER" or "DRAIN" in three (3) inch high raised letter thereon for sanitary sewers or storm drain manholes, respectively.

Castings shall conform to the requirements of ASTM Designation A-48, Class 25, and shall be free of porosity, shrink cavities, cold shuts or cracking, or any surface defects which would impair serviceability. Repair of defects by welding or by the use of "Smooth-on" or similar material will not be permitted.

Nodular iron covers, when specified, Section 63–1, shall conform to ASTM Designation A-339, Grade 60-45-10.

Matching bearing surfaces of manhole ring and covers shall be accurately machined in a lathe or other precision equipment to assure interchangeability and non-rocking fits in any position. All castings shall be entirely coated with a bituminous coating equivalent to Preservative Paint Co. No. 25-22 Black Dip Paint, unless otherwise provided in the special provisions.

63–2.09 PRECAST MANHOLE COMPONENTS 100

63–2.09A Base Sections 100

63–2.09B Precast Manhole Sections 101

63–2.09C Precast Cones 101

63–2.09D Flat Slab Covers 101

63–2.09E Flat Slab Reducing Sections 101

63–2.09F Permissible Variation in Precast Section Dimensions 101

63–2.09G Workmanship and Finish of Precast Sections

Cones and sections shall be free from fractures, large or deep cracks and surface roughness. Slabs shall be sound and free from gravel pockets. All manhole elements shall be capable of producing a watertight structure when properly assembled and jointed.

63–2.10 SHOP FABRICATED CORRUGATED METAL MANHOLES 101

63–2.11 MONOLITHIC CONCRETE MANHOLES

Monolithic concrete manholes that differ from the inside dimensional requirements of the standard plans shall be submitted to the Engineer by the Contractor for approval prior to their construction. Walls of monolithic concrete manholes shall be six (6) inches minimum thickness and the base shall be eight (8) inches minimum thickness, and steps shall be spaced twelve (12) inches.

63–3 CONSTRUCTION DETAILS 101

63–3.01 FOUNDATION PREPARATION 101

63–3.01A Dewatering 101

63–3.01B Sub-base Preparation 101

63–3.02 BEDDING FOR PRECAST MANHOLE BASES (Title changed for City use)

When native bedding is not suitable for leveling to provide a suitable foundation for manholes constructed using precast base sections, the precast base sections shall be placed upon Type No. 7 mineral aggregate of Section 26, mixed with four (4) sacks of portland cement per cubic yard of mineral aggregate, four (4) inches in minimum thickness extending as a leveled surface across the entire width of the excavation for the manhole base section. The Type 7 mineral aggregate foundation material shall be firmly compacted into place and the surface smoothed and leveled to assure positive, uniform contact with the bottom of the precast base section.

63–3.03 CAST-IN-PLACE BASES

Cast-in-place concrete foundation slabs for supporting manhole structures as shown on the standard plans shall be eight (8) inches in thickness, and shall extend six (6) inches radially outside the outside surface of the vertical wall section. The vertical wall section shall have a wall thickness of six (6) inches formed in place above the foundation slab to establish a uniform horizontal elevation not less than six (6) inches above the crown of the highest pipe connecting to the manhole base.

Concrete for cast-in-place foundation base slab and base vertical wall sections shall be Class 5 (1½) concrete proportioned and mixed to conform to the requirements of Section 39 for concrete mixed for pavements. Dry mixed cement and aggregate depending on ground water or water in the sewer excavation to hydrate the concrete mixture shall not be permitted. When troublesome water conditions exist in the excavation detrimental for placing mixed concrete for the foundation, the Contractor shall place sufficient plastic polyethylene sheeting in the excavation to assure that the concrete can be placed without damage from water in the excavation to the concrete.

The vertical wall section of cast-in-place concrete bases shall be formed to true vertical alignment as a watertight unit encasing the pipes entering or leaving the manhole base to the elevation of six (6) inches above crown of the highest pipe.

Base walls cast-in-place as above, when for manholes to be constructed with masonry bricks and mortar shall have a vertical wall thickness of eight (8) inches.

63–3.04 MONOLITHIC CONCRETE BASE, LARGE DIAMETER PIPE (Title changed for City use)

Where any pipe forty-two (42) inches or larger connects to any manhole, the base structure shall be monolithically cast-in-place in accordance with Standard Plans Nos. 135 and 136.

63–2.02A Aluminum Steps

Aluminum steps shall be forged of 615-T6 alloy having a minimum tensile strength of 38,000 psi. The cross section shall be not less than ¾-inch wide by ⅞-inch deep with two non-skid grooves not to exceed ⅛-inch deep and ⅛-inch wide. Pattern and dimensions shall conform with Standard Plan No. 138.

63–2.02B Galvanized Deformed Bar Steps

Galvanized deformed bar steps shall be one (1) inch diameter deformed bar conforming to ASTM A 15, intermediate or standard grade, hot bent and galvanized after bending. For bending, the temperature shall be at least 1600° F. Galvanizing shall conform to ASTM A 123. Step dimensions and pattern shall conform with Standard Plan No. 138.

63–2.03 LADDERS 100

63–2.04 MORTAR 100

63–2.04A Mortar for Jointing 100

63–2.04B Mortar for Plaster-coating 100

63–2.05 CONCRETE MASONRY UNITS 100

63–2.06 CONCRETE BRICK 100

63–2.07 CLAY BRICK 100

63–2.08 MANHOLE RING AND COVER CASTINGS (Title changed for City use)

Manhole ring and cover castings shall conform to the details shown on Standard Plans Nos. 139, 140 and 141. The cover castings shall have the word "SEWER" or "DRAIN" in three (3) inch raised letters thereon for sanitary sewer or storm drain manholes, respectively.

Castings shall conform to the requirements of ASTM Designation A-48, Class 25, and shall be free of porosity, shrink cavities, cold shuts or cracking, or any surface defects which would impair serviceability. Repair of defects by welding or by the use of "Smooth-on" or similar material will not be permitted.

Nodular iron covers, when specified, Section 63–1, shall conform to ASTM Designation A-339, Grade 60-45-10.

Matching bearing surfaces of the manhole ring and cover castings shall be accurately machined in a lathe or other precision equipment to assure interchangeability and non-rocking fits in any position. All castings shall be entirely coated with a bituminous coating equivalent to Preservative Paint Co. No. 25-22 Black Dip Paint, unless otherwise provided in the special provisions.

63–2.09 PRECAST MANHOLE COMPONENTS 100

63–2.09A Base Sections 100

63–2.09B Precast Manhole Sections 101

63–2.09C Precast Cones 101

63–2.09D Flat Slab Covers 101

63–2.09E Flat Slab Reducing Sections 101

63–2.09F Permissible Variation in Precast Section Dimensions 101

63–2.09G Workmanship and Finish of Precast Sections

Cones and sections shall be free from fractures, large or deep cracks and surface roughness. Slabs shall be sound and free from gravel pockets. All manhole elements shall be capable of producing a watertight structure when properly assembled and jointed.

63–2.10 SHOP FABRICATED CORRUGATED METAL MANHOLES 101

63–2.11 MONOLITHIC CONCRETE MANHOLES

Monolithic concrete manholes that differ from the inside dimensional requirements of the standard plans shall be submitted to the Engineer by the Contractor for approval prior to their construction. Walls of monolithic concrete manholes shall be six (6) inches minimum thickness and the base shall be eight (8) inches minimum thickness, and steps shall be spaced twelve (12) inches.

63–3 CONSTRUCTION DETAILS 101

63–3.01 FOUNDATION PREPARATION 101

63–3.01A Dewatering 101

63–3.01B Sub-base preparation 101

63–3.02 BEDDING FOR PRECAST MANHOLE BASES (Title changed for City use)

Manholes constructed with precast base sections, unless otherwise provided in the special provisions or directed by the Engineer, shall be placed to grade upon a four (4) inch thickness of Type No. 7 mineral aggregate of Section 26, mixed with four (4) sacks of portland cement per cubic yard of mineral aggregate, with sufficient water added to form a stabilized layer. The mixed material shall be placed across the entire width of the manhole base excavation and leveled so as to provide bearing contact with the entire bottom area of the precast base section.

63–3.03 CAST-IN-PLACE BASES

Cast in place concrete base and vertical base wall section for supporting manhole structures shall be constructed in accordance with the standard plans. The base slab shall be eight (8) inches in thickness and shall extend six (6) inches beyond the outside surface of the vertical wall section.

At the Contractor's option, the vertical base wall six (6) inches thick may be cast in place above the foundation slab to the required horizontal elevation not less than six (6) inches above the crown of the highest pipe connecting to the manhole base.

Concrete for cast-in-place foundation slabs and vertical base wall sections shall be Class 5 (1½) concrete proportioned and mixed to conform to the requirements of Section 39 for concrete mixed for pavements. Dry mixed cement and aggregate depending on ground water or water in the sewer excavation to hydrate the concrete mixture shall not be permitted. When troublesome water conditions exist in the excavation detrimental for placing mixed concrete for the foundation, the Contractor shall place sufficient plastic polyethylene sheeting in the excavation to assure that the concrete can be placed without damage from water in the excavation to the concrete.

The vertical wall section of cast-in-place concrete bases shall be formed to true vertical alignment as a watertight unit encasing the pipes entering or leaving the manhole base to the elevation of six (6) inches above crown of the highest pipe.

Base walls cast-in-place as above, when for manholes to be constructed with masonry units and mortar, shall have a vertical wall thickness of eight (8) inches.

63–3.04 MONOLITHIC CONCRETE BASE, LARGE DIAMETER PIPE (Title changed for City use)

Monolithic concrete base manholes shall be constructed as shown on Standard Plans Nos. 135 and 136. The manhole base sections shall be formed and cast in place around the existing large diameter pipe.

63–2.01A Cement 99
63–2.01B Wire Fabric Reinforcement 99
63–2.01C Bar Reinforcement 99
63–2.01D Aggregates 99
63–2.01E Mixture 99
63–2.01F Curing 100
63–2.01G Strength 100
63–2.02 STEPS 100

63–2.02A Aluminum Steps

Aluminum steps shall be forged of 615-T6 alloy having a minimum tensile strength of 38,000 psi. The cross section shall be not less than ¾-inch wide by ⅞-inch deep with two non-skid grooves not to exceed ⅛-inch deep and ⅛-inch wide. Pattern and dimensions shall conform with Standard Plan No. 138.

63–2.02B Galvanized Deformed Bar Steps

Galvanized deformed bar steps shall be one (1) inch diameter deformed bar conforming to ASTM A 15, intermediate or standard grade, hot bent and galvanized after bending. For bending, the temperature shall be at least 1600° F. Galvanizing shall conform to ASTM A 123. Step dimensions and pattern shall conform with Standard Plan No. 138.

63–2.03 LADDERS 100
63–2.04 MORTAR 100
63–2.04A Mortar for Jointing 100
63–2.04B Mortar for Plaster-coating 100
63–2.05 CONCRETE MASONRY UNITS 100
63–2.06 CONCRETE BRICK 100
63–2.07 CLAY BRICK 100

63–2.08 MANHOLE RING AND COVER CASTINGS (Title changed for City use)

Cast iron, rings, frames, covers and grates shall conform to the details shown on Standard Plans Nos. 139, 140 and 141.

Covers shall have the word "SEWER" or "DRAIN" in three (3) inch high raised letter thereon for sanitary sewers or storm drain manholes, respectively.

Castings shall conform to the requirements of ASTM Designation A-48, Class 25, and shall be free of porosity, shrink cavities, cold shuts or cracking, or any surface defects which would impair serviceability. Repair of defects by welding or by the use of "Smooth-on" or similar material will not be permitted.

Nodular iron covers, when specified, Section 63–1, shall conform to ASTM Designation A-339, Grade 60-45-10.

Matching bearing surfaces of manhole ring and covers shall be accurately machined in a lathe or other precision equipment to assure interchangeability and non-rocking fits in any position. All castings shall be entirely coated with a bituminous coating equivalent to Preservative Paint Co. No. 25-22 Black Dip Paint, unless otherwise provided in the special provisions.

63–2.09 PRECAST MANHOLE COMPONENTS 100
63–2.09A Base Sections 100
63–2.09B Precast Manhole Sections 101
63–2.09C Precast Cones 101
63–2.09D Flat Slab Covers 101
63–2.09E Flat Slab Reducing Sections 101
63–2.09F Permissible Variation in Precast Section Dimensions 101

63–2.09G Workmanship and Finish of Precast Sections

Cones and sections shall be free from fractures, large or deep cracks and surface roughness. Slabs shall be sound and free from gravel pockets. All manhole elements shall be capable of producing a watertight structure when properly assembled and jointed.

63–2.10 SHOP FABRICATED CORRUGATED METAL MANHOLES 101

63–2.11 MONOLITHIC CONCRETE MANHOLES

Monolithic concrete manholes that differ from the inside dimensional requirements of the standard plans shall be submitted to the Engineer by the Contractor for approval prior to their construction. Walls of monolithic concrete manholes shall be six (6) inches minimum thickness and the base shall be eight (8) inches minimum thickness, and steps shall be spaced twelve (12) inches.

63–3 CONSTRUCTION DETAILS 101
63–3.01 FOUNDATION PREPARATION 101
63–3.01A Dewatering 101
63–3.01B Sub-base Preparation 101

63–3.02 BEDDING FOR PRECAST MANHOLE BASES (Title changed for City use)

When native bedding is not suitable for leveling to provide a suitable foundation for manholes constructed using precast base sections, the precast base sections shall be placed upon Type No. 7 mineral aggregate of Section 26, mixed with four (4) sacks of portland cement per cubic yard of mineral aggregate, four (4) inches in minimum thickness extending as a leveled surface across the entire width of the excavation for the manhole base section. The Type 7 mineral aggregate foundation material shall be firmly compacted into place and the surface smoothed and leveled to assure positive, uniform contact with the bottom of the precast base section.

63–3.03 CAST-IN-PLACE BASES

Cast-in-place concrete foundation slabs for supporting manhole structures as shown on the standard plans shall be eight (8) inches in thickness, and shall extend six (6) inches radially outside the outside surface of the vertical wall section. The vertical wall section shall have a wall thickness of six (6) inches formed in place above the foundation slab to establish a uniform horizontal elevation not less than six (6) inches above the crown of the highest pipe connecting to the manhole base.

Concrete for cast-in-place foundation base slab and base vertical wall sections shall be Class 5 (1½) concrete proportioned and mixed to conform to the requirements of Section 39 for concrete mixed for pavements. Dry mixed cement and aggregate depending on ground water or water in the sewer excavation to hydrate the concrete mixture shall not be permitted. When troublesome water conditions exist in the excavation detrimental for placing mixed concrete for the foundation, the Contractor shall place sufficient plastic polyethylene sheeting in the excavation to assure that the concrete can be placed without damage from water in the excavation to the concrete.

The vertical wall section of cast-in-place concrete bases shall be formed to true vertical alignment as a watertight unit encasing the pipes entering or leaving the manhole base to the elevation of six (6) inches above crown of the highest pipe.

Base walls cast-in-place as above, when for manholes to be constructed with masonry bricks and mortar shall have a vertical wall thickness of eight (8) inches.

63–3.04 MONOLITHIC CONCRETE BASE, LARGE DIAMETER PIPE (Title changed for City use)

Where any pipe forty-two (42) inches or larger connects to any manhole, the base structure shall be monolithically cast-in-place in accordance with Standard Plans Nos. 135 and 136.

63–3.05 MANHOLE DIMENSIONS

The inside diameter of manholes shall be as shown on the standard plans for the type of manhole specified. Manholes less than ten feet ten inches (10′-10″) in total depth to crown of highest pipe entering the base shall not be reduced in diameter except for the top reduction to twenty-four (24) inches to accommodate the cover casting ring. Where manholes are more than ten feet ten inches to the crown of the highest pipe, the Contractor may, unless otherwise provided in the special provisions, reduce to thirty-six (36) inches in inside diameter, with the base of the reducing cone or slab reducer to be not less than six (6) feet above the channel shelf of the manhole at the crown elevation of the highest pipe entering the base.

Manholes less than four (4) feet in total depth to the pipe crown shall have flat slab covers as shown on Standard Plans Nos. 133 and 134.

63–3.06 BLOCK OR BRICK MANHOLES (Title changed for City use)

Manholes, when construction is with standard masonry blocks or bricks, shall be laid up in full unfurrowed mortar joints to provide watertight structures, the finished inside diameters of which will conform to the dimensions shown on the standard plans. Such manholes, unless constructed above a cast-in-place base as specified in Section 63–3.03, shall be constructed centrally in true vertical alignment upon the cast-in-place concrete foundation slab, which shall be one (1) foot greater in diameter than the outside diameter of the vertical masonry construction.

The inside of the manhole shall be neatly wiped of excess mortar at masonry joints and around pipes entering and leaving the manhole. Ladder rungs shall be spaced as shown on the standard plans except that uniform spacing shall not exceed fourteen (14) inches.

Upon completion of masonry constructed manholes, they shall be made watertight by plastering the inside surface of the manhole with mortar as specified in Section 63–2.04B. Minimum thickness of the plaster coating shall be one-fourth (¼) inch.

63–3.07 PRECAST MANHOLES 102

63–3.07A Manhole with Precast Base (Title Changed for City use)

The base section shall be carefully placed on the prepared bedding so as to be fully and uniformly supported in true vertical alignment, and making sure that all entering pipes can be inserted on proper grade.

All lift holes and all joints between precast sections shall be thoroughly wetted and then be completely filled with mortar, smoothed and pointed both inside and out, to ensure watertightness.

Precast sections shall be placed and aligned to provide vertical sides and vertical alignment of the ladder rungs. The completed manhole shall be rigid, true to dimensions, and be watertight.

Where lift straps in lieu of lift holes have been provided in precast manhole sections, they shall, after the manhole is completed, be removed entirely flush with the inside wall surface of the manhole. Where sharp cut off protrusions remain after cut-off, they shall be removed with suitable sharp tools or by grinding so that a smooth non-protruding surface results. Should concrete spalling occur as a result of the strap removal, the spalled area shall be restored in a workmanlike manner to a uniform smooth surface with mortar.

63–3.07B Manhole with Cast-in-Place Base Sections (Title changed for City use)

The first precast wall section shall be placed on the cast-in-place foundation before the base concrete has set hard, and shall be carefully adjusted to true vertical alignment so as to form an integral, watertight joint between base and the precast section; or the precast section shall be mortared into a suitable groove formed in the cast-in-place concrete base. Remainder of construction after placement of the first precast section shall be the same as specified above for construction with precast base sections.

63–3.08 MONOLITHIC CONCRETE MANHOLES 102

63–3.09 SHOP FABRICATED CORRUGATED METAL MANHOLES

Shop fabricated corrugated metal manholes shall be constructed in strict accordance with the detailed plans approved by the Engineer and shall conform to all applicable provisions of these specifications.

63–3.10 GRADE ADJUSTMENT MANHOLE COVERS (Title changed for City use)

The Contractor shall construct manholes of the type specified on the project plans initially so as to provide adjustment space for setting cover fastenings to a finished grade as hereinafter specified. The manhole grade sheet furnished the Contractor by the Engineer for manhole construction purposes show the approximate top grade for the manhole, plus or minus two-tenths (0.2) foot and the final grade shall be set by the Engineer after backfilling has been completed by the Contractor to the grade established by the Engineer. No separate payment for final adjustment of the cover castings for new construction will be made. All cost therefor shall be incidental to the unit contract prices for the manhole, except as provided in Section 63–5.

63–3.10A Streets at Grade 102

63–3.10B Streets with No Established Grade

Where work is in streets or other areas which have not been brought to grade, the top of cone or slab shall be constructed so as to provide the same adjustment height as specified in Section 63–3.10A that will place the top surface of the cover castings level with the ground surface or such other elevation above the ground as may be shown on the project plans, unless otherwise directed by the Engineer.

63–3.11 CHANNELS

Open "U" channels for connecting sewer pipes across manhole bases shall be constructed accurately, as to size of the pipes, and to the invert grade shown on the plans, for a smooth transition between the pipes connected across the manhole. Channels for pipes which intersect at an angle shall be formed with the longest radius practical inside the manhole. The sides of the channels, above the horizontal diameter, shall rise vertically to the crown or the highest pipe in the manhole base. The shelf between the inside wall space of the manhole base and th "U" channel edge shall slope for drainage to the channel.

63–3.12 PIPE CONNECTIONS

All pipe twenty-four (24) inches and less in diameter entering or leaving manholes at the base shall have approved rubber gasket type joints, located not more than twelve (12) inches away from the outside wall surface of the manhole base.

When precast manhole base sections are used, special care shall be exercised by the Contractor to assure that all openings through which the pipes enter or leave the manhole are completely filled with mortar to make them watertight.

Pipe thimbles placed in manhole bases for future connections thereto shall have ends suitable for rubber gasketed joints and shall be plugged watertight, as specified for tees and wyes in Section 62–3.06.

63–3.13 BACKFILL

Backfill around manholes shall be placed uniformly on all sides to match the applicable provisions therefor as specified in Sections 61–3.05 and 61–3.06.

63–3.14 DROP MANHOLES

Drop manholes, wherever shown on the plans, shall conform in all respects to the requirements for standard manholes of the type or types used on the project except for the additional drop detail as shown on the Standard Plan No. 137.

63–3.15 LADDERS AND LADDER IRONS (New Section)

Manhole step irons, as described in Section 63–2.02, for manhole structures, shall be aligned vertically to provide a ladder with rungs spaced as detailed on the standard plan. The maximum deviation allowable in the vertical spacing of step irons shall be one and one-half (1½) inches from that shown on the standard plans.

Prefabricated ladders, as described in Section 63–2.03, where used in conjunction with step irons, shall be in vertical alignment with the ladder rungs.

63–4 MEASUREMENT 102

63–5 PAYMENT

Payment for each manhole shall consist of a basic price per each, plus a unit price per foot for all depth in excess of five feet, plus a unit price per each for drop connections where they occur.

Where more than one type or size designation is shown on the drawings or called for in the special provisions, each shall be covered by a separate bid item of the following form:

(1) "Manhole Type (number), Basic Price," per each.
(2) "Extra Depth Manhole Shafting (diameter)," per linear foot.
(3) "Drop Connections (size)," per linear foot.

Where an existing manhole is encountered in the work and it is required that it must be adjusted to new grade, the work and payment therefor shall be as provided in Section 53, Adjustment of New and Existing Utility Structures to Finish Grade.

Where a new constructed manhole cover casting has been completed to the finished grade set by the Engineer, and is later required to be adjusted up or down to a revised grade by the Engineer, the Adjustment shall be paid for as provided in Section 53–3.01A, first paragraph, and such payment will be in addition to the manhole construction.

Section 64—Catch Basins and Inlets

64–1 DESCRIPTION

Standard catch basins and inlets may be constructed of precast units, concrete masonry units, or of concrete or clay brick, or cast-in-place concrete, all in accordance with the standard plans and specifications; excepting however, that the Contractor's choice of alternates may be limited in the special provisions.

The various types and methods of construction are identified below.

64–1.01 CATCH BASIN INLET, RECTANGULAR CROSS SECTION 103

64–1.02 CATCH BASINS, ROUND BARREL CROSS SECTION (Title changed for City use)

Catch basins are of six (6) standard types, as detailed on Standard Plans Nos. 150 to 155, inclusive.

For each type of catch basin, variations relative to their construction are tabulated on the standard plan to specify castings used for construction. For example, referring to Standard Plan No. 150, for a Type 150 catch basin, four variations, A, B, C and D, are listed on the plan to classify castings required. Should the contract construction plans, special provisions or the Engineer specify a Type 150 A catch basin, the catch basin would be constructed using a Type 139 ring and cover casting, as detailed on Standard Plan No. 139, and a Type 160 (a) outlet trap casting, as detailed on Standard Plan No. 160. Likewise, for a specified Type 150 C catch basin, the castings would be a Type 157, and a Type 160 (b), outlet trap casting, as detailed on Standard Plan No. 160.

The above example applies similarly to other standard types of catch basins.

Catch basins as a payment item shall not include pipe connections outside the catch basin walls for connecting inlets located entirely away and separate from the catch basin, or the pipe connection between the catch basin outlet casting spigot and the sewer to which it is connected. These items will be paid for as separate contract bid items in the proposal, as specified in Section 69.

64–1.03 COMBINATION CURB AND GUTTER CATCH BASIN INLET (Not used) 103

64–1.04 INLETS (Title changed for City use)

Inlets for drainage are of three (3) standard types, namely Type 164, Type 165 and Type 166 described as follows:

Type 164 inlets are small inlets with a six (6) inch outlet constructed with standard castings, as detailed on Standard Plan No. 164 and assembled in concrete as shown on Standard Plan 164.1.

Type 165 inlets are large rectangular shaped inlet boxes having an eight (8) inch outlet pipe as detailed on Standard Plan No. 165.1. The rectangular frame casting and associated inlet grate casting for a Type 165 inlet shall be as detailed on Standard Plans Nos. 168 and 170, respectively.

Type 166 inlets are similar to Type 165 inlets except for the rectangular frame casting which shall be as detailed on Standard Plan No. 169 and the method of installation as shown on Standard Plan No. 166.1.

64–2 MATERIALS 103

64–2.01 CASTINGS (Title changed for City use)

Castings installed with the various types of catch basins shall conform to the respective requirements therefor in the subsections that follow for the kind of casting specified.

The machining of bearing surfaces and protective coating specified in Section 63–2.08 for manhole covers shall also apply to catch basin castings.

64–2.01A Ring Frame and Covers, Type 139 and Type 157 (New Section)

Type 139 and Type 157 castings, as detailed on Standard Plans Nos. 140 and 159, shall be of cast iron conforming to ASTM Designation A 48 Class 25, unless otherwise provided in the special provisions.

64–2.01B Rectangular Frames, Type 168 and Type 169 (New Section)

Type 168 and Type 169 castings as detailed on Standard Plans Nos. 168 and 169 shall be made of cast iron, as specified above in Section 64–2.01A.

64–2.01C Rectangular Grates, Type 170 (New Section)

Type 170 grate castings, as detailed on Standard Plan No. 170, for use with Type 168 and Type 169 inlets, shall be made of cast steel conforming to ASTM Designation A 27, Grade 70-36, or nodular cast iron conforming to ASTM Designation A 339, Grade 60-45-10 at the manufacturer's option, unless otherwise provided in the special provisions.

64–2.02 TRAP CASTINGS (Title changed for City use) 103

64.2.02A Outlet Traps, Type 160 (New Section)

Outlet traps Type 160A and Type 160B, as detailed on Standard Plan No. 160, shall be made of cast iron conforming to ASTM Designation A 48 Class 75.

64–2.02B Outlet Traps, Type 162 (New Section)

Outlet traps Type 162A and Type 162B, as detailed on Standard Plan No. 162, may be made of cast iron conforming to ASTM Designation A 48, Class 25, or cast steel ASTM Designation A 27, Grade 70-36, at the manufacturer's option.

64–2.03 MORTAR 103

64–3 CONSTRUCTION DETAILS

Construction details for catch basins shall conform to the applicable requirements for manholes in Section 63–3 except as hereinafter specified.

Excavation for catch basins and backfill when made with job excavated material shall be incidental to the catch basin construction when the excavation depth required does not exceed eight (8) feet. Should a depth of more than eight (8) feet be required, measurement and payment will be made as specified for structure excavation in Section 17 for the volume in cubic yards excavated below the eight foot depth to such other depth required.

Backfill around catch basins is required to be adequate as a foundation to support shallow outlet connection pipe from post settlement after backfilling has been completed, resulting from vehicular traffic. To prevent post settlement and shearing damage to pipe connecting to the catch basin, the backfill material placed around the catch basins, unless water settling is provided in the special provisions of the proposal or authorized by the Engineer, shall be compacted into place with mechanical tampers in successive layers six (6) inches in thickness, to the crown of the highest pipe connected to the catch basin. The density to which each layer shall be compacted shall be as directed by the Engineer. Payment for mechanical tamping to the extent directed by the Engineer, will be made as specified in Section 15.

64–3.01 LOCATION AND GRADE ADJUSTMENT (Title changed for City use)

Location of catch basins shall be staked by the Engineer in accordance with Standard Plan No. 149, unless otherwise shown on the project plans, and a grade sheet furnished the Contractor for reference to construct the catch basin to an elevation that will provide for final grade adjustment for the cast iron cover ring casting in accordance with the applicable requirements of Section 63–3.10.

64–3.02 PIPE CONNECTIONS

All openings in the walls of catch basins constructed with precast sections for the insertion of pipe connections and outlet trap castings, shall after pipe or castings have been placed to their final position, be grouted tight in place in a workmanlike manner to present an inside and outside surface conforming to the standard plans. Pipe placed through walls to which connections will be made shall be so placed that the socket end of the pipe is backed against the outside surface of the catch basin as close as practical for the angle of entrance. The spigot end of the pipe shall be cut square with the last point of contact with the inside wall surface.

64–3.03 SUBGRADE DRAINAGE OPENINGS (Not used) 103

64–3.04 SEEPAGE STRUCTURE (Not used) 103

64–3.05 TRAPS

Traps shall be installed where shown on the construction plans. Traps shall meet the requirements outlined in Section 64–2.02 and be in accordance with Standard Plans Nos. 160 and 162.

64–3.06 INLETS (New Section)

Standard type inlets, as shown on the plans or where directed by the Engineer, shall be constructed upon adequate firm foundations prepared in conformance with the applicable specifications for subgrades for compaction in Section 15. For Type 165 and Type 166 inlets, the locations will be staked by the Engineer. The provisions of Section 63–3.10 for placement of cover casting shall likewise apply to placement of Type 168 and Type 169 frame castings to final elevation for Type 165 and Type 166 inlets.

Type 165 and Type 166 inlets as a bid item in the proposal shall include the pipe forming the outlet spigot for the inlet. Pipe connection from inlet to an approved outlet will be paid for as a separate unit bid item, as specified in Section 69–3.04.

64–4 MEASUREMENT 104

64–4.01 CATCH BASIN OR INLET (Title changed for City use)

Measurement for catch basins and inlets will be made on a per each basis for the type of catch basin or inlet constructed, as shown on the standard plans.

No measurement for excavation and backfill for catch basins will be made. All costs therefor shall be incidental to their construction except that where construction excavating depth is greater than eight (8) feet as specified in Section 64–3, or where compaction of backfill with mechanical tampers is required, and where classified backfill materials are supplied other than native job excavated materials for foundation materials or backfilling around the catch basin, such items shall be paid for by appropriate bid items in the proposal, as described in other sections pertaining thereto.

No measurement for excavation for inlets will be made; all costs therefor shall be incidental to the construction.

64–5 PAYMENT

Payment will be made for such of the following bid items as are included in the proposal:

(1) "Catch Basin Type ( )," per each.
(2) "Inlets Type ( )," per each.
(3) "Mechanical Tamper," per hour.
(4) "Mineral Aggregate for Trench Backfill, Type No....," per cubic yard.
(5) "Structure Excavation," per cubic yard.

The above unit bid contract prices shall be payment in full for all labor, materials, tools and any other work necessary of whatsoever nature it may be to complete the work item as described in accordance with the construction plans and these standard specifications.

64–5.01 CATCH BASIN AND INLET (Not used) 104

64–5.02 TRAP (Not used) 104

64–5.03 CATCH BASIN INLET FRAME AND GRATE (Not used) 104

64–5.04 ADJUSTMENT OF EXISTING CATCH BASIN AND INLET 104

Section 65—Subsurface Drains

65–1 DESCRIPTION 104

65–2 MATERIALS AND TESTING 104

65–2.01 CORRUGATED METAL PIPE 104

65–2.01A Bituminous Coated Corrugated Metal Pipe 104

65–2.02 CLAY PIPE 104

65–2.03 PERFORATED CONCRETE PIPE 104

65–2.04 PERFORTED ASBESTOS-CEMENT PIPE 104

65–2.05 INSPECTION 104

65–2.05A Inspection at Factory

Where provided in the proposal, the Engineer or his representative shall approve all pipe at the manufacturer's plant before shipment. However, the Engineer reserves the right to reject any defective pipe discovered at any time after delivery or during the progress of the work. Approval at the manufacturer's plant shall not relieve the Contractor of responsibility to replace defective pipe discovered thereafter.

65–2.05B Disposition of Defective Material 104

65–2.05C Material Furnished by Contractor 104

65–2.05D Material Furnished by City (Title changed for City use) 104

65–3 CONSTRUCTION DETAILS 104

65–3.01 EXCAVATION 104

63–3.15 LADDERS AND LADDER IRONS (New Section)

Manhole step irons, as described in Section 63–2.02, for manhole structures, shall be aligned vertically to provide a ladder with rungs spaced as detailed on the standard plan. The maximum deviation allowable in the vertical spacing of step irons shall be one and one-half (1½) inches from that shown on the standard plans.

Prefabricated ladders, as described in Section 63–2.03, where used in conjunction with step irons, shall be in vertical alignment with the ladder rungs.

63–4 MEASUREMENT 102

63–5 PAYMENT

Payment for each manhole shall consist of a basic price per each, plus a unit price per foot for all depth in excess of five (5) feet, plus a unit price per linear foot for drop connections where they occur.

Where more than one type or size designation is shown on the drawings or called for in the special provisions, each shall be covered by a separate bid item of the following form:

(1) "Manhole Type (number), Basic Price," per each.
(2) "Extra Depth Manhole Type (number)," per linear foot.
(3) "Drop Connections (size)," per linear foot.

Where an existing manhole is encountered in the work and it is required that it must be adjusted to new grade, the work and payment therefor shall be as provided in Section 53, Adjustment of New and Existing Utility Structures to Finish Grade.

Where a new constructed manhole cover casting has been completed to the finished grade set by the Engineer, and is later required to be adjusted up or down to a revised grade by the Engineer, the Adjustment shall be paid for as provided in Section 53–3.01A, first paragraph, and such payment will be in addition to the manhole construction.

Section 64—Catch Basins and Inlets

64–1 DESCRIPTION

Standard catch basins and inlets may be constructed of precast units, concrete masonry units, or of concrete or clay brick, or cast-in-place concrete, all in accordance with the standard plans and specifications; excepting however, that the Contractor's choice of alternates may be limited in the special provisions.

The various types and methods of construction are identified below.

64–1.01 CATCH BASIN INLET, RECTANGULAR CROSS SECTION 103

64–1.02 CATCH BASINS, ROUND BARREL CROSS SECTION (Title changed for City use)

Catch basins with round barrel cross sections shall be constructed as detailed on Standard Plans Nos. 150, 151, 152, 154 and 171.

For each type of catch basin, variations relative to castings required in their construction are tabulated on the standard plans. For example, referring to Standard Plan No. 151, eight variations, "A" to "H," are listed to classify cover and outlet castings used. For a Type 151 A catch basin, the ring and cover casting required is a Type 141, as detailed on Standard Plan No. 141, and the outlet trap casting to be used is a Type 160A, six (6) inch outlet, as detailed on Standard Plan No. 160. Likewise, for a Type 151 E catch basin, the ring and cover casting combination is for an inlet top cover, as detailed on Standard Plan No. 157, and the outlet trap casting remains the same as specified for the Type 151 A catch basin.

The above example also applies for Type 151 B and Type 151 D catch basins, except that the outlet trap has an eight (8) inch outlet.

Identification of Type 152 catch basins, Standard Plan No. 152, and the castings to be installed for each type specified, i.e., A, B, C, D, E and F, are the same as described for Type 151 catch basins, except that Type 152 E and Type 152 F cover castings are detailed on Standard Plan No. 46, page 177 of the APWA specifications.

The above example applies similarly to other standard types of catch basins.

Catch basins as a payment item shall not include pipe connections outside the catch basin walls for connecting inlets located entirely away and separate from the catch basin, or the pipe connection between the catch basin outlet casting spigot and the sewer to which it is connected. These items will be paid for as separate contract bid items in the proposal, as specified in Section 69.

64–1.03 COMBINATION CURB AND GUTTER CATCH BASIN INLET (Not used) 103

64–1.04 INLETS (Title changed for City use)

Inlets for drainage are of three (3) standard types; namely, Type 164, Type 165 and Type 166, described as follows:

Type 164 inlets are small inlets with a six (6) inch outlet constructed with standard castings, as detailed on Standard Plan No. 164 and assembled in concrete as shown on Standard Plan 164.1.

Type 165 inlets are large rectangular shaped inlet boxes having a six (6) inch outlet pipe installed as detailed on Standard Plan No. 165.1. The rectangular frame casting and associated inlet grate casting for a Type 165 inlet shall be as detailed on Standard Plans Nos. 168 and 170, respectively.

Type 166 inlets are similar to Type 165 inlets, except for outlet pipe and the rectangular frame casting which shall be as detailed on Standard Plan No. 169 and the method of installation as shown on Standard Plan No. 166.1.

64–2 MATERIALS 103

64–2.01 CASTINGS (Title changed for City use)

Castings installed with the various types of catch basins shall conform to the respective requirements therefor in the subsections that follow for the kind of casting specified.

The machining of bearing surfaces and protective coating specified in Section 63–2.08 for manhole covers shall also apply to catch basin castings.

64–2.01A Ring Frame and Covers, Type 139 and Type 157 (New Section)

Type 139 and Type 157 castings, as detailed on Standard Plans Nos. 139 and 157, shall be of cast iron conforming to ASTM Designation A 48, Class 25, unless otherwise provided in the special provisions.

64–2.01B Rectangular Frames, Type 168 and Type 169 (New Section)

Type 168 and Type 169 castings as detailed on Standard Plans Nos. 168 and 169 shall be made of cast iron, as specified above in Section 64–2.01A.

64–2.01C Rectangular Grates, Type 170 (New Section)

Type 170 grate castings, as detailed on Standard Plan No. 170, for use with Type 168 and Type 169 inlets, shall be made of cast steel conforming to ASTM Designation A 27, Grade 70-36, or nodular cast iron conforming to ASTM Designation A 339, Grade 60-45-10 at the manufacturer's option, unless otherwise provided in the special provisions.

64–2.02 TRAP CASTINGS (Title changed for City use)

64.2.02A Outlet Traps, Type 160 (New Section)

Outlet traps Type 160A and Type 160B, as detailed on Standard Plan No. 160, shall be made of cast iron conforming to ASTM Designation A 48 Class 75.

64–2.02B Outlet Traps, Type 162 (New Section)

Outlet traps Type 162A and Type 162B, as detailed on Standard Plan No. 162, may be made of cast iron conforming to ASTM Designation A 48, Class 25, or cast steel ASTM Designation A 27, Grade 70-36, at the manufacturer's option.

64–2.03 MORTAR 103

64–3 CONSTRUCTION DETAILS

Construction details for catch basins shall conform to the applicable requirements for manholes in Section 63–3 except as hereinafter specified.

Excavation for catch basins and backfill when made with job excavated material shall be incidental to the catch basin construction when the excavation depth required does not exceed eight (8) feet. Should a depth greater than eight (8) feet be required to construct the catch basin according to standard plan, the extra depth volume in cubic yards below the eight (8) foot depth will be paid for as "Extra Excavation," computed on the basis of the catch basin base section area and the additional depth.

Backfill around catch basins is required to be adequate as a foundation to support shallow outlet connection pipe from post settlement after backfilling has been completed. To prevent settlement and shearing damage to pipe connecting to the catch basin, the backfill material placed around the catch basins, unless water settling is provided in the special provisions of the proposal or authorized by the Engineer, shall be compacted into place with mechanical tampers in successive layers six (6) inches in thickness to the crown of the highest pipe connected to the catch basin. The density to which each layer shall be compacted shall be as directed by the Engineer. Payment for mechanical tamping to the extent directed by the Engineer will be made as specified in Section 15.

64–3.01 LOCATION AND GRADE ADJUSTMENT (Title changed for City use)

Location of catch basins shall be staked by the Engineer in accordance with Standard Plan No. 149, unless otherwise shown on the project plans, and a grade sheet furnished the Contractor for reference to construct the catch basin to an elevation that will provide for final grade adjustment for the cast iron cover ring casting in accordance with the applicable requirements of Section 63–3.10.

64–3.02 PIPE CONNECTIONS

All openings in the walls of catch basins constructed with precast sections for the insertion of pipe connections and outlet trap castings shall, after pipe or castings have been placed to their final position, be grouted tight in place in a workmanlike manner to present an inside and outside surface conforming to the standard plans. Pipe placed through walls to which connections will be made shall be so placed that the socket end of the pipe is backed against the outside surface of the catch basin as close as practical for the angle of entrance. The spigot end of the pipe shall be cut square with the last point of contact with the inside wall surface.

64–3.03 SUBGRADE DRAINAGE OPENINGS (Not used) 103

64–3.04 SEEPAGE STRUCTURE (Not used) 103

64–3.05 TRAPS

Traps shall be installed where shown on the construction plans. Traps shall meet the requirements outlined in Section 64–2.02 and be in accordance with Standard Plans Nos. 160 and 162.

64–3.06 INLETS (New Section)

Standard type inlets, as shown on the plans or where directed by the Engineer, shall be constructed upon adequate firm foundations prepared in conformance with the applicable specifications for subgrades for compaction in Section 15. For Type 165 and Type 166 inlets, the locations will be staked by the Engineer. The provisions of Section 63–3.10 for placement of cover casting shall likewise apply to placement of Type 168 and Type 169 frame castings to final elevation for Type 165 and Type 166 inlets.

Type 165 and Type 166 inlets as a bid item in the proposal shall include the pipe forming the outlet spigot for the inlet. Pipe connection from inlet to an approved outlet will be paid for as a separate unit bid item, as specified in Section 69–3.04.

64–4 MEASUREMENT 104

64–4.01 CATCH BASIN OR INLET (Title changed for City use)

Measurement for catch basins and inlets will be made on a per each basis for the type of catch basin or inlet constructed, as shown on the standard plans.

No measurement for excavation and backfill for catch basins will be made. All costs therefor shall be incidental to their construction except that where construction excavating depth is greater than eight (8) feet as specified in Section 64–3, or where compaction of backfill with mechanical tampers is required, and where classified backfill materials are supplied other than native job excavated materials for foundation materials or backfilling around the catch basin, such items shall be paid for by appropriate bid items in the proposal, as described in other sections pertaining thereto.

No measurement for excavation for inlets will be made; all costs therefor shall be incidental to the construction.

64–5 PAYMENT

Payment will be made for such of the following bid items as are included in the proposal:

(1) "Catch Basin Type ( )," per each.
(2) "Inlets Type ( )," per each.
(3) "Mechanical Tamper," per hour.
(4) "Mineral Aggregate for Trench Backfill, Type No....," per cubic yard.
(5) "Extra Excavation," per cubic yard.

The above unit bid contract prices shall be payment in full for all labor, materials, tools and any other work necessary of whatsoever nature it may be to complete the work item as described in accordance with the construction plans and these standard specifications.

64–5.01 CATCH BASIN AND INLET (Not used) 104

64–5.02 TRAP (Not used) 104

64–5.03 CATCH BASIN INLET FRAME AND GRATE (Not used) 104

64–5.04 ADJUSTMENT OF EXISTING CATCH BASIN AND INLET 104

Section 65—Subsurface Drains

65–1 DESCRIPTION 104

65–2 MATERIALS AND TESTING 104

65–2.01 CORRUGATED METAL PIPE 104

65–2.01A Bituminous Coated Corrugated Metal Pipe 104

65–2.02 CLAY PIPE 104

65–2.03 PERFORATED CONCRETE PIPE 104

65–2.04 PERFORATED ASBESTOS-CEMENT PIPE 104

65–2.05 INSPECTION 104

65–2.05A Inspection at Factory

The Engineer or his representative may approve all pipe at the manufacturer's plant in accordance with Section 5.11 and Section 6. However, the Engineer reserves the right to reject any defective pipe discovered at any time after delivery or during the progress of the work. Approval at the manufacturer's plant shall not relieve the Contractor of responsibility to replace defective pipe discovered thereafter.

65–2.05B Disposition of Defective Material 104

65–2.05C Material Furnished by Contractor 104

65–2.05D Material Furnished by City (Title changed for City use) 104

65–3 CONSTRUCTION DETAILS 104

65–3.01 EXCAVATION 104

65–3.01A General

The trench shall be dug to the required alignment and grade only so far in advance of pipe laying as the Engineer will approve. The clear width of unsheeted or sheeted trench measured at the horizontal diameter of the pipe in place shall be eighteen (18) inches or one (1) foot greater than the outside diameter of the pipe, whichever is the greater. Any part of the trench excavation below grade or to a greater width than specified shall be backfilled at the expense of the Contractor with filter material hereinafter described.

Extreme care shall be exercised by the Contractor at all times during the performance of the work to maintain the trench and excavated material in such condition that there will be no mixing of excavated material with the filter material to be used for backfilling. All excess excavated material not required by the plans or special provisions for the construction, shall be disposed of by the Contractor.

65–3.01B Protection of Existing Utilities

The Engineer will furnish such information as is available to determine the location of existing utilities that may be affected by the construction. Final responsibility for the definite location of any such existing utilities shall be the responsibility of the Contractor and he shall, at his own expense, perform all the necessary work to protect and maintain the services of any utilities affected by his operations. Any damage to an existing utility as a result of the construction operations shall be repaired at the Contractor's expense as necessary for restoring the utility to service.

65–3.01C Braced and Sheeted Trench 105

65–3.02 PIPE LAYING 105

65–3.02A General 105

65–3.02B Bedding 105

65–3.02C Inspection 105

65–3.02D Lowering Pipe and Fittings into Trench 105

65–3.03 PIPE JOINTING 105

65–3.03A Corrugated Pipe 105

65–3.03B Asbestos-Cement Pipe 105

65–3.03C Clay Pipe 105

65–3.03D Concrete Pipe

Concrete pipe shall be butted up tight and centered so as to provide a continuous and uniform line of pipe with a smooth and regular interior surface. Pipe shall be laid without joint closure unless otherwise provided in the special provisions. Where joint closure is specified, jointing shall conform to the requirements of Section 62–3.08 for sewer pipe joints except that the dimensional requirements for rubber gaskets and annular space shall not apply.

65–3.04 BACKFILLING WITH FILTER MATERIAL ..105

65–3.04A Filter Material 105

65–3.04B Placing Filter Material 105

65–3.05 RESTORATION, FINISHING AND CLEANUP 105

65–4 MEASUREMENT AND PAYMENT 105

65–4.01 GENERAL 105

65–4.02 PIPE 105

65–4.03 EXCAVATION AND BACKFILL

No measurement for trench excavation and backfill will be made when no unit bid price therefor, on a linear foot, or a cubic yard basis is included in the proposal. When included in the proposal, compensation will be made as provided in Section 61–4.01, except that when on a cubic yard basis, width of trench shall be as specified in Section 65–3.01A.

65–4.04 FILTER MATERIAL

Filter material in place will be measured in trucks at the point of delivery, and will be paid for at the unit contract price per cubic yard or per ton, as provided in the proposal, which price shall be full compensation furnishing the material and placing in accordance with the specifications, excepting however, that the unit contract price shall not include mechanical tamping, and except that the total volume of filter material placed and paid for shall not exceed the excavation volume paid for as structure excavation.

65–4.05 MECHANICAL TAMPER 105

Section 66—Side Sewers

66–1 DESCRIPTION

Side sewers and their construction as required by this section pertains to sewer pipe installed between the main sewer and the margin of the street or other public right of way, only, in to which a similar pipe line for conveying sanitary waste materials from a residence, building or other facility, constructed upon private property, is connected for disposal of sanitary wastes.

The general requirements for construction of sewers in other sections of these specifications shall apply for construction of side sewers unless they are inconsistent with any of the provisions of this section.

66–2 MATERIALS 106

66–2.01 PIPE 106

66–2.02 JOINTS 106

66–2.03 FITTINGS 106

66–3 CONSTRUCTION DETAILS 106

66–3.01 GENERAL

Side sewer locations as shown on the plans are subject to relocation in the field after construction starts. Regardless of the plan location, the Contractor shall place the necessary tee and wye branch in the main sewer line during his pipe laying operations at such other location as may be designated by the Engineer for constructing side sewers therefrom to the abutting property.

Depth for elevation of side sewer invert grades, for the end pipe, at street margins, shall be staked by the Engineer.

66–3.01A Side Sewers Not Shown on Plans
(New Section)

Whenever side sewers are not shown on the plans and when after construction is in progress, should abutting property owners make application for a side sewer within the street margin and the Engineer approves the construction of such additional side sewers, the Contractor shall be required to construct at his bid price all such new side sewers approved prior to the completion of sewer and side sewer construction work and the removal of his construction equipment from within the block containing the applicant's property.

A block shall be that distance between center lines of the cross streets where they intersect the street in which the side sewer is located, either above or below the point of side sewer connection.

Removal of equipment shall be all pieces of equipment that may be required for construction of sewers including the backfilling and compaction.

The Contractor shall not be required to construct side sewers for which applications have been received after he has completed work within the block containing the applicant's property. However, he may construct such side sewers if he so desires and may negotiate his own price for such work, including conditions of payment, with the applicant.

Should the Contractor elect to construct such side sewers, after removal of his equipment, at his bid price, payment therefor will be made by the City in the normal manner. Otherwise, the City will not enter into the financing of such side sewers and the Contractor shall look to the property owner for payment.

66–3.02 EXCAVATION AND BACKFILL

Excavation and backfill for side sewers shall conform to the requirements of Section 61. All costs resulting to the Contractor for side sewer excavation and backfill when no unit bid item is included in the proposal for "Sewer Trench Excavation and Backfill," shall be considered as incidental to the construction of the side sewer and included in the unit bid prices for side sewer pipe. When the poposal contains a unit bid price for "Sewer Trench Excavation and Backfill," payment will be made on a linear foot or cubic yard basis, whichever method is specified.

66–3.03 PIPE LAYING AND JOINTING

Pipe laying and jointing for side sewers in general shall conform to the applicable requirements of Section 62, from a starting point at the tee or wye opening in the main sewer pipe to the designated end pipe elevation at the property line.

66–3.03A Line and Grade

Side sewers shall be laid to a line and grade between the main sewer tee branch or wye branch and the street margin so as to best serve the property, relative to the following factors as directed by the Engineer:

(1) Where property is vacant and is level with or lower than the street grade, the invert elevation of the side sewer end pipe, at the street margin, shall be one (1) foot higher than the elevation of the outside diameter of the main sewer at the location of the tee or wye branch.

(2) Where the property abutting the street to be served is occupied and higher than the street grade, and where the required slope will be greater than called for in (1) above, the maximum grade at the street margin for the side sewer, unless other factors prevent, shall be established by the Engineer to place the side sewer pipe at an elevation that will be below the invert of any proposed storm drain pipe located as shown on Standard Plan No. 209. When a storm drain pipe is existing and shown on the plans, the clearance between crown of the side sewer and bottom of storm drain pipe shall not be less than six (6) inches. In either event, the end pipe of the side sewer when produced to the street margin shall be such that will provide for a backfill cover over the crown of the pipe that is not less than two and one-half (2½) feet below the established street grade.

66–3.03B Pipe Laying

Pipe laying for side sewers shall conform to the applicable requirements for pipe laying in Section 62–3.02

66–3.03C Jointing

Jointing for side sewers shall conform to the applicable requirements of Section 62–3.08.

66–3.04 FITTINGS (Not used) 106

66–3.05 CLEANOUTS (Not used) 106

66–3.06 INSPECTION AND TESTING 106

66–3.06A Inspection

Inspection for side sewers in general shall be as for main sewers in Section 62–3.10.

66–3.06B Testing

All side sewers constructed in conjunction with the main sewer construction shall, for the purpose of testing in accordance with Section 63–3.10, have a six (6) inch tee fitting pipe located at the point where the side sewer crosses the street or other public right of way margin to the privtae property. The tee opening shall be positioned perpendicular to the side sewer slop unless otherwise directed by the Engineer.

When side sewers are not tested with and at the same time as the main sewer, an additional tee shall be placed as the first pipe out of the main sewer tee or wye branch through which an inflatable rubber ball for sealing the side sewer off from the main for testing separately can be inserted.

The ends of side sewers or test tee openings as required shall be plugged watertight as hereinbefore specified in Section 62–3.06.

Payment for test tees in side sewers shall be made on a per each basis, which payment will be in addition to the payment for side sewer pipe.

66–3.07 MISCELLANEOUS REQUIREMENTS 107

66–3.07A Requirements

(1) *Pipe and Connections*

Side sewer pipe as required by these specifications, 66–1, shall be not less than six (6) inches in diameter.

(2) *Minimum Cover*

For minimum cover above side sewer pipe in streets, refer to Section 66–3.03A.

(3) *Proximity to Water Supply Lines*

Any side sewer which at any point will lie within ten (10) feet of a water supply line shall be constructed so that it will be at least six (6) inches in elevation below the water supply line. If this requirement will prohibit a connection of the side sewer, the Contractor shall proceed under such method and with materials as detailed on the plans or as directed by the Engineer.

(4) *Plugs*

Any unused openings to the side sewer shall be closed with a watertight stopper fastened in place. Such plugs shall conform to the requirements of Section 62–3.06.

(5) *Septic Tanks and Cesspools*

No side sewer shall be constructed through or adjacent to an existing cesspool or septic tank. If the conditions prohibit any other location, the Contractor shall abate the cesspool or septic tank by such means as the Engineer may direct, and by such payment as may be specified or agreed upon.

66–3.08 RESTORATION, FINISHING AND CLEANUP 107

66–3.09 EXTENDING SIDE SEWERS INTO PRIVATE PROPERTY (New Section)

Property owners will be permitted to extend side sewers onto their private property in accordance with Standard Plan No. 176 and connect fixtures thereto, as provided by ordinance, as soon as the main sewer construction has progressed past the point of side sewer connection and leakage tests have been satisfactorily completed and the use of the connections will not interfere with the completion of the other parts of the contract work, as authorized by the Engineer. Such connections of private property side sewers, when authorized by the Engineer, shall not be cause to relieve the Contractor from his responsibility to maintain the main sewer until final acceptance of the contract work by the City.

66–3.10 END PIPE MARKER WIRES (New Section)

The end pipe of side sewers, deeper than four (4) feet at the street margin or other right of way margin, shall be referenced by fastening a No. 12 gauge galvanized iron wire around the end pipe and extending it vertically to the surface of the ground and there attaching it to a well-bedded stake so that it may be readily located by the abutting property owner after backfilling at a later date.

Payment for marker wires when placed will be made on a per each basis, as specified in Section 66–4.

66–4 MEASUREMENT

Measurement for payment of side sewers shall be made on the slope and shall include the exact length of side sewer pipe laid between the tee or wye and the street margin. Whenever a standard bend pipe is used to make the connection of a side sewer pipe with a tee or wye at the main sewer, the bend pipe so used shall be included in the measured length of side sewer.

Measurement for payment of test tees installed in side sewers shall be on a per each basis, for the size installed, which price shall be in addition to the price for side sewer pipe.

No measurement for side sewer excavation and backfill will be made when a unit contract price for "Sewer Trench Excavation and Backfill" is not included in the proposal. All costs therefor shall be incidental to the side sewer construction as specified in Section 66–3.02.

Measurement for payment of leakage tests for side sewers will be made as specified in Section 62–3.10D.

66–5 PAYMENT

Payment for side sewers will be made for such of the following bid items that are included and shown in any particular contract:

(1) "Size, class) Side Sewer Pipe in Place," per linear foot.
(2) "Tee (size)," per each.
(3) "Wye," per each.
(4) "Mechanical Tamper," per hour.
(5) "Foundation Material, Type.....," per cubic yard.
(6) "Pipe Bedding (class) (size) Pipe," per linear foot.
(7) "Leakage Test (pipe size)," per linear foot.
(8) "End Marker Wire," per each.
(9) "Watersettling," per linear foot.

The above unit bid contract prices shall be payment in full for all labor, materials, tools and any other work necessary as may be required to complete the work item as described in accordance with the plans and these standard specifications.

Section 67—Pipe Covering and Embankment for Sewer Construction

67–1 DESCRIPTION

This section of the specification applies to the construction of pipe covering and embankment.

Unless otherwise provided in the plans or special provisions, when sewer pipe invert grades in an ungraded street or right of way are upon the existing ground surface, and grading is not provided in the proposal, the Contractor shall construct a compacted embankment in which to lay the pipe to grade therein and place a protective earth cover over the pipe to the depth and cross section shown on Standard Plan No. 178.

67–2 CONSTRUCTION DETAILS 107

67–2.01 PIPE BED

The area upon which the embankment for the pipe bed is to be placed shall be stripped to the extent the Engineer directs, and the cost thereof will be paid for by force account as defined in Section 9.04.

The embankment upon which the pipe is to be installed shall be constructed in accordance with requirements outlined in Section 13–3.10E3 Method B, up to a point equal to the spring line of the pipe. The material used in constructing the embankment shall be such that it will readily compact to required density. The Contractor may use any type of compacting equipment he wishes provided the required end result is obtained, and provided no damage occurs to surface or subsurface improvements.

67–2.02 PIPE COVER

The pipe cover material above the compacted embankment shall be placed without compaction, and shall be shaped to the required section.

67–2.03 SOURCE OF MATERIAL

The source of material shall be that which is specified in the special provisions.

67–3 MEASUREMENT

Measurement for "Pipe Covering and Embankment," will be by the cubic yard as calculated from cross sections based on elevations of the ground surface and the neat lines of the cross section shown on Standard Plan No. 178, from which no deduction will be made for volume displaced by the pipe.

67–4 PAYMENT

Payment will be made at the unit contract price per cubic yard for "Pipe Covering and Embankment," which price shall be full compensation for furnishing all labor, equipment and materials necessary to construct and compact the embankment and cover to the requirements of these specifications.

Section 68—Finishing and Cleanup for Underground Conduits

68–1 CLEANUP 107

Section 69—Pipe Connections (New Section)

69–1 DESCRIPTION (New Section)

Pipe connections, as defined in this section, are sewer and storm drain pipe connections other than described in Section 62 and Section 66 for connecting various sewer appurtenances, as hereinafter defined.

69–2 MATERIALS (New Section)

Pipe, for pipe connection as herein defined, shall conform to the applicable requirements in Section 60.

69–3 CONSTRUCTION DETAILS

69–3.01 EXCAVATION AND BACKFILL (New Section)

All costs for trench excavation, backfill and disposal of surplus excavation not used for backfill for pipe connections as hereinafter described, shall be considered incidental to the construction of the pipe connections, unless the proposal contains a unit contract price for "Sewer Excavation and Backfill." When the proposal contains such a unit, payment will be made on the basis specified in the proposal, in addition to the unit contract price for pipe connections in the proposal.

69–3.02 PIPE LAYING, JOINTING AND TESTING (New Section)

Pipe laying, jointing and testing for pipe connections shall conform to the applicable requirements of Section 62, insofar as they apply. Testing for watertightness of shallow depth pipe connections, i.e., less than one (1) foot of cover, when not tested in conjunction with new sewer or drain tests for acceptance, shall be as provided in the special provisions.

69–3.03 CATCH BASIN CONNECTIONS (New Section)

Catch basin connections are pipe ocnnections connecting outlets of catch basins to a receiving sewer, storm drain, or other approved outlet. Both alignment and slope shall be a straight line unless otherwise approved by the Engineer, as a result of handicaps preventing a straight pipe connection. Standard pipe bands shall be used, when necessary, to make a suitable direct connection to either end of the connection or both ends, or for bends between, as authorized by the Engineer.

No catch basin pipe connection shall be connected to the catch basin spigot pipe or casting until after backfill for the catch basin excavation has been compacted into place to the elevation specified in Section 64–3, necessary to support the pipe.

Payment for catch basin pipe connections will be made on the basis of linear feet of pipe laid.

69–3.04 INLET CONNECTIONS (New Section)

Inlet connections are pipe connections from standard types of drainage inlets to catch basins, storm sewers or other approved outlets. In general, except for their shallower depth, construction requirements for inlet connections shall be as for catch basins. Inlet connections shall be laid upgrade from catch basin openings, storm drain tees or wyes, or other approved starting locations in straight alignment at a uniform slope for drainage. Where straight alignment is not possible and curves or bends are necessary, the Engineer shall approve the alignment and slope.

No pipe connections shall be made to a catch basin until the compaction requirements of Section 64–3 has been completed and approved by the Engineer.

Inlet pipe connections will be paid for on the basis of linear feet.

69–3.05 STANDING CONNECTIONS (New Section)

Standing pipe connections are vertical concrete encased pipe connections as shown on Standard Plan No. 175 for connecting high level pipe or pipes to a deep main sewer.

The concrete block foundation for supporting standing connections in a sewer trench shall be bearing upon firm native ground so as to preclude any concentrated load on the main sewer pipe.

All applicable construction details pertaining to the laying and jointing of pipe in Section 62 shall apply to the placement of the vertical pipe for encasement in concrete above the concrete foundation, including sealing of unused tee or wye branches at the top of the standing connection.

Backfilling around standing pipe connections, unless otherwise provided in the special provisions or authorized by the Engineer, shall be made by compacting with mechanical tampers, suitable excavated materials in layers eight (8) inches in thickness to a density as directed by the Engineer, around the standing connection. The backfill shall start from a wide base foundation and slope evenly upward to the top of the standing connection so as to provide a compacted subgrade for pipe connections to be connected thereto.

Payment for standing pipe connections encased in concrete as shown on the standard plan, will be made on the basis of linear feet.

Payment for mechanical tampers to compact backfill into place around standing connections to the density as required by the Engineer, will be made as provided in Section 15.

Tees or wyes for making connections to standing connections will be paid for on a per each basis, which payment will be in addition to the linear foot payment for standing connections.

69–4 MEASUREMENT (New Section)

Measurement for catch basin pipe connections shall be the actual length of pipe connection in linear feet installed between the tee opening or wye branch in the receiving main pipe, or other approved terminal at which the connection is discharged and the spigot end of a catch basin outlet pipe.

Measurement for inlet pipe connections shall be the actual length of pipe connection installed between the existing catch basin port opening, storm drain pipe tee or wye branch opening, or other approved channel into which the connection discharges up to the spigot end of the inlet outlet pipe.

Measurement for standing pipe connections shall be by the linear foot for the overall length of standing connection in place, measured from the bottom of the concrete block foundation to the top of the highest pipe of the standing connection which is encased and/or partially encased in concrete. Payment for tee or wye branch pipe used in constructing standing connections will be made on a per each basis which payment will be in addition to the measurement for standing connection.

69–5 PAYMENT (New Section)

Payment for pipe connections of the kind specified shall be made by such of the following bid items included in any particular contract:

(1) "(Size) Catch Basin Connection," per linear foot.
(2) "(Size) Inlet Connection," per linear foot.
(3) "(Size)" Standing Connection," per linear foot.
(4) "Tee (size)," per each.
(5) "Wye (size)," per each.
(6) "Mechanical Tamper," per hour.
(7) "Watersettling," per linear foot.

The above unit contract prices shall be payment in full for all labor, materials, tools and any other work necessary as may be required to complete the work items, as described in accordance with these standard specifications.

Section 72—Pipe for Water Mains

72–1 GENERAL 108
72–2 PIPE 108
72–2.01 CAST IRON PIPE....108
72–2.02 ASBESTOS-CEMENT PIPE 108
72–2.03 CONCRETE CYLINDER PIPE....108
72–2.04 STEEL PIPE 108
72–2.04A Coatings for Steel Pipe....108
72–2.04B Couplings for Steel Pipe....108
72–2.05 GALVANIZED STEEL PIPE....108
72–2.06 GALVANIZED WROUGHT IRON PIPE....108
72–2.07 PIPE FITTINGS 108
72–2.07A Cast Iron 108
72–2.07B Steel 108
72–2.08 SPECIAL FITTINGS

The term "special fittings" shall apply to all tees, crosses or other fittings installed in water mains in accordance with the construction plans and the special provisions.

72–3 MEASUREMENT AND PAYMENT....108

Section 73—Trench Excavation and Backfill for Water Mains

73–1 GENERAL 108
73–1.01 UNGRADED STREETS 109
73–1.02 CLEARING AND GRUBBING IN UNGRADED STREETS 109
73–1.03 REMOVAL OF PAVEMENT FROM DRIVEWAYS AND SIDEWALKS....109
73–1.04 GRADE AND ALIGNMENT....109
73–1.05 UNDERGROUND UTILITIES (Title changed for City use)

The Contractor shall inform himself as to the existence and location of any underground utilities, the existence of which are of record in the various City departments, and support and protect same against damage, as specified in Section 5.09.

73–2 TRENCH EXCAVATION

The Contractor shall perform all excavation of every description and of whatsoever substances encountered to the depth indicated on the drawings or specified herein. All excavations shall be made by open cut unless otherwise provided in the special provisions. The banks of the trenches shall be kept as nearly vertical as soil conditions will permit, and where required to control trench width or to protect adjacent structures the trench shall be properly sheeted and braced. Work shall comply with the Washington State Safety Code for construction work as required by the State Safety Inspector. Where, in the opinion of the Engineer, damage is liable to result from withdrawing sheeting, the Engineer may require the sheeting to be left in place and payment therefor will be made in accordance with Section 73–3.07.

All grading and other excavations nearby shall be controlled to prevent surface water from flowing into the excavations. During excavation, material suitable for backfilling shall be piled in an orderly manner a sufficient distance away from the edges of trenches to avoid overloading and to prevent slides or cave-ins. Suitable excavated materials in excess of the needs for backfilling excavations, embankments or other purposes according to contract shall, when available, and application therefor is made and approved by the Engineer, be distributed in accordance with the requirements of Section 4.06A. Other requirements for waste sites are as provided in Section 4.06.

The Contractor shall exercise sound engineering and construction practices in excavating the trench and maintaining it so that no damage will occur to any foundation, structure, pole line, pipe line, or other facility because of slough of slopes, or from any other cause. If, as a result of the excavation, there is disturbance of the ground such as to endanger other property, the Contractor shall immediately take remedial action at his own expense. No act, representation or instruction of the Engineer or his representatives shall in any way relieve the Contractor from liability for damages or costs that result from trench excavation.

Care shall be taken not to excavate below the depth indicated, excavation below the depth shall be replaced with suitable material compacted to the original density at the Contractor's expense.

The bottom of trenches shall be accurately graded to provide uniform bearing and support for each length of pipe on undisturbed or compacted soil at every point along its entire length, except at the joints. Bell holes shall be excavated to an extent sufficient to permit accurate work in making and inspecting the joints.

73–2.01 CUTTING EXISTING SERVICES

When excavation is made by machine, the City will cut and reconnect water utility services at no expense to the Contractor, in accordance with the applicable provisions therefor in Section 5.13. The Contractor shall carefully do all necessary excavation to fully expose such services. If the Contractor elects to excavate the trench without first exposing the services, he shall be responsible for any and all damages incurred to the services by reason of his operations and shall immediately arrange for replacement of all damaged services. All additional costs incident to such work under either method by the Contractor shall be considered as incidental to the construction and shall be included in the unit contract price bid per linear foot for "Trench Excavation and Backfill."

73–2.02 SOLID ROCK EXCAVATION

Solid rock shall include solid rock formations requiring systematic drilling and blasting with explosives and any boulders or broken rock larger than two (2) cubic yards in volume. Hardpan or cemented gravel, even though it may be advantageous to use explosives in its removal, shall not be classified as solid rock excavation. Solid rock shall be excavated to a width equal to the outside barrel diameter of pipe plus twenty-four (24) inches, and to a grade line not less than six (6) inches below bottom of the pipe. The bottom of the rock excavation shall then be brought back up to grade with suitable backfill material compacted into place.

73–2.03 EXTRA EXCAVATION

Changes in grades of the water main from those shown on the plans or provided in the special provisions, may be necessary because of unplatted utilities, or for other reasons. If, in the opinion of the Engineer, it is necessary to adjust, correct, relocate or in any way change the line and grade after they have been excavated as called for by proposal plans, such changes shall be made by the Contractor under the terms of these specifications.

When a change in horizontal or vertical alignment not exceeding one (1) foot is ordered by the Engineer, no additional payment therefor will be allowed other than the unit bid price for "Excavation and Backfill." When solid rock is encountered, payment therefor will be made at the unit contract price for solid rock excavation.

When a change in horizontal alignment exceeding one (1) foot is ordered by the Engineer, payment will be made on a negotiated price basis for extra work in accordance with Section 9.03.

Changes in grade which will involve additional depth of trench greater than the above one (1) foot, but by not

Page 70 DIVISION FOUR—WATER DISTRIBUTION

Section 72—Pipe for Water Mains

72–1 GENERAL 108
72–2 PIPE 108
72–2.01 CAST IRON PIPE (Cement Lining Required) 108
72–2.02 ASBESTOS-CEMENT PIPE 108
72–2.03 CONCRETE CYLINDER PIPE....108
72–2.04 STEEL PIPE 108
72–2.04A Coatings for Steel Pipe....108
72–2.04B Couplings for Steel Pipe....108
72–2.05 GALVANIZED STEEL PIPE....108
72–2.06 GALVANIZED WROUGHT IRON PIPE....108
72–2.07 PIPE FITTINGS 108
72–2.07A Cast Iron 108
72–2.07B Steel 108
72–2.08 SPECIAL FITTINGS

The term "special fittings" shall apply to all tees, crosses or other fittings installed in water mains in accordance with the construction plans and the special provisions.

72–3 MEASUREMENT AND PAYMENT....108

Section 73—Trench Excavation and Backfill for Water Mains

73–1 GENERAL 108
73–1.01 UNGRADED STREETS 109
73–1.02 CLEARING AND GRUBBING IN UNGRADED STREETS 109
73–1.03 REMOVAL OF PAVEMENT, DRIVEWAYS AND SIDEWALKS....109
73–1.04 GRADE AND ALIGNMENT....109 (See Standard Plan No. 209)
73–1.05 UNDERGROUND UTILITIES (Title changed for City use)

The Contractor shall inform himself as to the existence and location of any underground utilities, the existence of which are of record in the various City departments, and support and protect same against damage, as specified in Section 5.09.

73–2 TRENCH EXCAVATION

The Contractor shall perform all excavation of every description and of whatsoever substances encountered to the depth indicated on the drawings or specified herein. All excavations shall be made by open cut unless otherwise provided in the special provisions. The maximum trench excavation width, when for pipes four (4) inches to twelve (12) inches, shall not exceed thirty (30) inches and for larger sizes of pipe, the trench bottom width shall not exceed that specified in Section 61–3.01A for sewers, unless authorized by the Engineer. Where necessary to control the trench widths or to protect adjacent structures, the trench shall be properly sheeted and braced. Work shall comply with the Washington State Safety Code for construction work as required by the State Safety Inspector. Where, in the opinion of the Engineer, damage is liable to result from withdrawing sheeting, the Engineer may require the sheeting to be left in place and payment therefor will be made in accordance with Section 73–3.07.

All grading and other excavations nearby shall be controlled to prevent surface water from flowing into the excavations. During excavation, material suitable for backfilling shall be piled in an orderly manner a sufficient distance away from the edges of trenches to avoid overloading and to prevent slides or cave-ins. Suitable excavated materials in excess of the needs for backfilling excavations, embankments or other purposes according to contract shall, when available, and application therefor is made and approved by the Engineer, be distributed in accordance with the requirements of Section 4.06A. Other requirements for waste sites are as provided in Section 4.06.

The Contractor shall exercise sound engineering and construction practices in excavating the trench and maintaining it so that no damage will occur to any foundation, structure, pole line, pipe line, or other facility because of slough of slopes, or from any other cause. If, as a result of the excavation, there is disturbance of the ground such as to endanger other property, the Contractor shall immediately take remedial action at his own expense. No act, representation or instruction of the Engineer or his representatives shall in any way relieve the Contractor from liability for damages or costs that result from trench excavation.

Care shall be taken not to excavate below the depth indicated; excavation below the depth shall be replaced with suitable material compacted to the original density at the Contractor's expense.

The bottom of trenches shall be accurately graded to provide uniform bearing and support for each length of pipe on undisturbed or compacted soil at every point along its entire length, except at the joints. Bell holes shall be excavated to an extent sufficient to permit accurate work in making and inspecting the joints.

73–2.01 CUTTING EXISTING SERVICES

When excavation is made by machine, the City will cut and reconnect water utility services at no expense to the Contractor, in accordance with the applicable provisions therefor in Section 5.13. The Contractor shall carefully do all necessary excavation to fully expose such services. If the Contractor elects to excavate the trench without first exposing the services, he shall be responsible for any and all damages incurred by reason of his operation, including replacement of the services. All costs incurred by the Contractor for excavation to expose a service for cutting properly shall be considered as incidental to the work being performed.

73–2.02 SOLID ROCK EXCAVATION

Solid rock shall include solid rock formations requiring systematic drilling and blasting with explosives and any boulders or broken rock larger than two (2) cubic yards in volume. Hardpan or cemented gravel, even though it may be advantageous to use explosives in its removal, shall not be classified as solid rock excavation. Solid rock shall be excavated to a width equal to the outside barrel diameter of pipe plus twenty-four (24) inches, and to a grade line not less than six (6) inches below bottom of the pipe. The bottom of the rock excavation shall then be brought back up to grade with suitable backfill material compacted into place. Payment for solid rock excavation will be made in accordance with Section 73–3.03.

73–2.03 EXTRA EXCAVATION

Changes in grades of the water main from those shown on the plans or provided in the special provisions, may be necessary because of unplatted utilities, or for other reasons. If, in the opinion of the Engineer, it is necessary to adjust, correct, relocate or in any way change the line and grade after they have been excavated as called for by proposal plans, such changes shall be made by the Contractor under the terms of these specifications.

When a change in horizontal or vertical alignment not exceeding one (1) foot is ordered by the Engineer, no additional payment therefor will be allowed other than the unit contract price for "Trench Excavation and Backfill."

When a change in horizontal alignment exceeding one (1) foot is ordered by the Engineer, payment will be made on a negotiated price basis for extra work in accordance with Section 9.03.

Changes in grade which will involve additional depth of trench greater than the above one (1) foot, but by not

Section 72—Pipe for Water Mains

72–1 GENERAL 108
72–2 PIPE 108
72–2.01 CAST IRON PIPE....108
72–2.02 ASBESTOS-CEMENT PIPE 108
72–2.03 CONCRETE CYLINDER PIPE....108
72–2.04 STEEL PIPE 108
72–2.04A Coatings for Steel Pipe....108
72–2.04B Couplings for Steel Pipe....108
72–2.05 GALVANIZED STEEL PIPE....108
72–2.06 GALVANIZED WROUGHT IRON PIPE....108
72–2.07 PIPE FITTINGS 108
72–2.07A Cast Iron 108
72–2.07B Steel 108
72–2.08 SPECIAL FITTINGS

The term "special fittings" shall apply to all tees, crosses or other fittings installed in water mains in accordance with the construction plans and the special provisions.

72–3 MEASUREMENT AND PAYMENT....108

Section 73—Trench Excavation and Backfill for Water Mains

73–1 GENERAL 108
73–1.01 UNGRADED STREETS 109
73–1.02 CLEARING AND GRUBBING IN UNGRADED STREETS 109
73–1.03 REMOVAL OF PAVEMENT FROM DRIVEWAYS AND SIDEWALKS....109
73–1.04 GRADE AND ALIGNMENT....109
73–1.05 UNDERGROUND UTILITIES (Title changed for City use)

The Contractor shall inform himself as to the existence and location of any underground utilities, the existence of which are of record in the various City departments, and support and protect same against damage, as specified in Section 5.09.

73–2 TRENCH EXCAVATION

The Contractor shall perform all excavation of every description and of whatsoever substances encountered to the depth indicated on the drawings or specified herein. All excavations shall be made by open cut unless otherwise provided in the special provisions. The banks of the trenches shall be kept as nearly vertical as soil conditions will permit, and where required to control trench width or to protect adjacent structures the trench shall be properly sheeted and braced. Work shall comply with the Washington State Safety Code for construction work as required by the State Safety Inspector. Where, in the opinion of the Engineer, damage is liable to result from withdrawing sheeting, the Engineer may require the sheeting to be left in place and payment therefor will be made in accordance with Section 73–3.07.

All grading and other excavations nearby shall be controlled to prevent surface water from flowing into the excavations. During excavation, material suitable for backfilling shall be piled in an orderly manner a sufficient distance away from the edges of trenches to avoid overloading and to prevent slides or cave-ins. Suitable excavated materials in excess of the needs for backfilling excavations, embankments or other purposes according to contract shall, when available, and application therefor is made and approved by the Engineer, be distributed in accordance with the requirements of Section 4.06A. Other requirements for waste sites are as provided in Section 4.06.

The Contractor shall exercise sound engineering and construction practices in excavating the trench and maintaining it so that no damage will occur to any foundation, structure, pole line, pipe line, or other facility because of slough of slopes, or from any other cause. If, as a result of the excavation, there is disturbance of the ground such as to endanger other property, the Contractor shall immediately take remedial action at his own expense. No act, representation or instruction of the Engineer or his representatives shall in any way relieve the Contractor from liability for damages or costs that result from trench excavation.

Care shall be taken not to excavate below the depth indicated, excavation below the depth shall be replaced with suitable material compacted to the original density at the Contractor's expense.

The bottom of trenches shall be accurately graded to provide uniform bearing and support for each length of pipe on undisturbed or compacted soil at every point along its entire length, except at the joints. Bell holes shall be excavated to an extent sufficient to permit accurate work in making and inspecting the joints.

73–2.01 CUTTING EXISTING SERVICES

When excavation is made by machine, the City will cut and reconnect water utility services at no expense to the Contractor, in accordance with the applicable provisions therefor in Section 5.13. The Contractor shall carefully do all necessary excavation to fully expose such services. If the Contractor elects to excavate the trench without first exposing the services, he shall be responsible for any and all damages incurred to the services by reason of his operations and shall immediately arrange for replacement of all damaged services. All additional costs incident to such work under either method by the Contractor shall be considered as incidental to the construction and shall be included in the unit contract price bid per linear foot for "Trench Excavation and Backfill."

73–2.02 SOLID ROCK EXCAVATION

Solid rock shall include solid rock formations requiring systematic drilling and blasting with explosives and any boulders or broken rock larger than two (2) cubic yards in volume. Hardpan or cemented gravel, even though it may be advantageous to use explosives in its removal, shall not be classified as solid rock excavation. Solid rock shall be excavated to a width equal to the outside barrel diameter of pipe plus twenty-four (24) inches, and to a grade line not less than six (6) inches below bottom of the pipe. The bottom of the rock excavation shall then be brought back up to grade with suitable backfill material compacted into place.

73–2.03 EXTRA EXCAVATION

Changes in grades of the water main from those shown on the plans or provided in the special provisions, may be necessary because of unplatted utilities, or for other reasons. If, in the opinion of the Engineer, it is necessary to adjust, correct, relocate or in any way change the line and grade after they have been excavated as called for by proposal plans, such changes shall be made by the Contractor under the terms of these specifications.

When a change in horizontal or vertical alignment not exceeding one (1) foot is ordered by the Engineer, no additional payment therefor will be allowed other than the unit bid price for "Excavation and Backfill." When solid rock is encountered, payment therefor will be made at the unit contract price for solid rock excavation.

When a change in horizontal alignment exceeding one (1) foot is ordered by the Engineer, payment will be made on a negotiated price basis for extra work in accordance with Section 9.03.

Changes in grade which will involve additional depth of trench greater than the above one (1) foot, but by not more than four (4) feet below the plan grade, will be paid for at the unit contract price per cubic yard for "Extra Excavation," computed on the basis of the specified minimum trench width and additional depth below the plan grade.

Additional depth of trench involving more than four (4) feet below the plan grade, will be paid for as extra work negotiated in accordance with Section 9.03.

73–2.04 UNFORESEEN BURIED OBJECTS ENCOUNTERED IN TRENCH EXCAVATION ON GRADED STREETS....110
73–2.05 REMOVAL OF UNSUITABLE MATERIALS..110

73–2.06 BACKFILLING TRENCHES

Backfilling of trenches shall be made with the same materials excavated from the trenches unless these materials are found to be unsuitable by the Engineer.

Prior to backfilling, all form lumber and debris shall be removed from the trench. Sheeting used by the Contractor shall be removed just ahead of the backfilling unless it is ordered by the Engineer to be left in place.

Bedding for water mains will not ordinarily be required. When required, it shall consist of clean granular sand and gravel of which 100% will pass the U. S. standard ¾-inch opening and not more than 3% will pass the U. S. No. 200 (wet sieve), with a minimum sand equivalent of 50. Payment for furnishing and placing bedding material will be made upon measurement in trucks at point of delivery at the unit contract price per cubic yard for "Bedding Material."

Backfill up to six inches over the top and both sides of the pipe shall be evenly and carefully placed, but not until all large rocks capable of damaging the pipe or its coating have been removed from the backfill material. The balance of the backfill material shall be placed in a manner suitable for backfill compaction by one of the methods hereinafter described.

73–2.07 COMPACTION OF BACKFILL

On graded streets without pavement or on roadway shoulders and unimproved areas, compaction of backfill shall be by water settling by the jetting or puddling methods, as hereinafter described, unless otherwise provided in the special provisions or ordered by the Engineer. The jetting method shall be used for deep trenches over six (6) feet in depth. The jetting or puddling method may be used for trenches six (6) feet and less in depth.

73–2.07A Water Settling of Trenches

Where water settling is by the jetting method, it shall be performed with jetting equipment as specified under Section 16–3.03.

When water settling is by the puddling method, the trench shall first be filled approximately half full of water and the backfill material then shoveled or pushed into the trench at a rate that will assure that the backfill material as placed becomes saturated with the trench water without spillage of same out of the trench. Side dumping or pushing of large mass volumes of backfill into the water at a rate that will prevent the saturation of backfill shall not be permitted.

After the water settled trenches have set for several days, any depressions in the trench shall be filled and mounded up over the trench and then further compacted by operating a loaded truck over the trench area.

73–2.07B Equipment for Water Settling Trenches....110
(Refer to Section 16–3.01)
73–2.07C Source of Water for Water Settling

Water for water settling of backfill will depend on local conditions. When furnished from fire hydrants of the Seattle Water Department, the water will be furnished at no cost to the Contractor in accordance with the provisions therefor in Section 5.13.

73–2.07D Compaction of Backfill under Special Conditions....110
73–2.08 BANK RUN GRAVEL FOR TRENCH BACKFILL 110
73–2.09 SHEETING LEFT IN PLACE....110
73–2.10 TEMPORARY PEDESTRIAN CROSSINGS

The Contractor shall provide all necessary temporary pedestrian crossings for the proper handling of pedestrian traffic over the trench and shall provide access to private property where required by the Engineer. Temporary pedestrian crossings shall have the minimum requirements shown on Standard Plan No. 207.

73–3 MEASUREMENT AND PAYMENT....111
73–3.01 CLEARING AND GRUBBING....111
73–3.02 TRENCH EXCAVATION AND BACKFILL....111
73–3.03 SOLID ROCK EXCAVATION....111
73–3.04 REMOVAL AND REPLACEMENT OF UNSUITABLE MATERIAL 111
73–3.05 MECHANICAL TAMPING 111
73–3.06 BANK RUN GRAVEL FOR TRENCH BACKFILL 111
73–3.07 SHEETING LEFT IN PLACE....111
73–3.08 TEMPORARY PEDESTRIAN CROSSINGS....111

Section 74—Pipe Installation for Water Mains

74–1 GENERAL 111
74–2 CONSTRUCTION 111
74–2.01 DEWATERING OF TRENCH....111
74–2.02 HANDLING OF PIPE

All types of pipe shall be handled in such manner as will prevent damage to the pipe or their protective coating. Accidental damage to the pipe or coating shall, whenever possible, be repaired to the original requirements therefor. When restoration to the original requirements is not practical, the pipe shall be rejected and moved from the project. Paint coatings of pipe accidentally damaged may, when authorized by the Engineer, be repaired by cleaning and painting in the field, as specified for gate valves in Section 75–3.

All water main pipes and fittings shall be cleaned by the Contractor of all contaminating dirt and other foreign materials thereon or therein without damage to the standard protective coatings, immediately prior to being laid and he shall keep the pipe or fittings clean of any contaminating materials thereafter during the laying and jointing operations. Immediately following the laying and jointing and when pipe laying is not in progress, all open ends of fittings or pipe shall be closed tight with clean, approved watertight rubber gasketed expanding plugs fastened securely into the openings. In the event dirt or other contaminating materials are found inside the pipe after installation, the contaminating material shall be removed by whatsoever means may be necessary, at the Contractor's expense.

Threaded pipe ends shall be protected by couplings or other means until laid.

The pipe and fittings shall be inspected for defects and cast iron pipe, while suspended before laying, shall be rung with a light hammer to detect cracks.

74–2.03 LAYING OF PIPE ON CURVES....112
74–2.04 LAYING CAST IRON PIPE....112
74–2.04A Joints for Cast Iron Pipe....112
74–2.04B Bell and Spigot Pipe with Lead Joints....112
74–2.04C Packing Material 112

74–2.04D Preparation of Joint 112

74–2.04E Depth of Jointing Material 112

74–2.04F Lead 112

74–2.04G Heating and Pouring of Lead 112

74–2.04H Position of Joint Runner 112

74–2.04I Calking Lead Joints 112

74–2.05 JOINTING MECHANICAL JOINT PIPE 112

74–2.05A Cleaning and Assembling Joint 112

74–2.05B Bolting of Joint 112

74–2.06 JOINTING RUBBER GASKET JOINT PIPE (TYTON TYPE) 113

74–2.06A Cleaning and Assembling Joint 113

74–2.07 LAYING ASBESTOS-CEMENT PIPE 113

74–207A Couplings for Asbestos-cement Pipe 113

74–2.07B Cleaning and Assembling Joint 113

74–2.07C Short Lengths and Field Cut Joints 113

74–2.08 LAYING STEEL PIPE 113

74–2.08A Threaded Steel Pipe in Sizes Up to and Including 3½ Inch 113

74–2.08B Coupled Pipe 4-Inch and larger 113

74–2.09 LAYING CONCRETE PIPE 113

74–2.09A Cleaning and Assembling Joint 113

74–2.10 CONNECTIONS TO EXISTING MAINS

All connections required for the contract work to any existing water mains in use shall be made by the Seattle Water Department. Payment to the Seattle Water Department for such connections will be made as specified in Section 5.13, unless otherwise provided in the special provisions of the proposal.

The Contractor shall do all excavating necessary to prepare the site for the connection and shall furnish all crosses, tees or other specials required to be inserted in the existing main, as shown on the plans, and all other material required. After the connection has been made by the Seattle Water Department, the Contractor shall complete the final backfilling required.

74–2.10A Exploratory Holes, Shallow Depth (New Section)

Where directed by the Engineer to probe for the actual position and depth of an existing water main, or other pipe, the Contractor shall excavate and backfill exploratory holes approximately two (2) feet wide by four (4) feet in length to such depth, but not to exceed six (6) feet, as may be necessary to locate the existing pipes. Payment for such exploratory holes will be made at the unit contract price, per linear foot for "Exploratory Holes." Measurement for payment shall be from the surface of ground to the bottom of hole excavated, or to the top of pipe, whichever applies.

74–2.11 WATER SERVICE CONNECTIONS

The Seattle Water Department, in accordance with the provisions of Section 5.13 shall make all service connections of any size to new water mains.

For the purpose of supplying customers with water during the progress of a water main construction project, the City of Seattle reserves the right, after a section of pipe has passed a satisfactory hydrostatic and bacterial test, for the Seattle Water Department, with its own facilities, to tap corporation cocks into the sections of new main and install service connections at such locations they may elect, at no expense to the Contractor.

The attaching of any such service connections by the Seattle Water Department shall not be construed by the Contractor as an acceptance by the City of Seattle of any part of the work being performed under the contract.

74–2.11A Service Connections by Contractor, ¾-Inch (New Section)

Where shown on the plans, or where directed by the Engineer, the Contractor shall furnish and install standard weight, galvanized steel ¾-inch water service pipe connections, from a Seattle Water Department installed connection terminated with a water meter, to the location indicated and noted on the plan, or as designated by the Engineer. The connection pipe from the meter installed by the Water Department, to the end location required, shall be laid in a trench the depth of which shall provide a minimum cover for protection when backfilled of thirty (30) inches.

All pipe threads shall be cut full depth and when making connections, all male threads shall be covered with a suitable compound for lubricating the connection and making it watertight. All cut ends of pipe, before assembling, shall be reamed to full bore.

The pipe joints shall be watertight and need not be tested nor disinfected but shall be flushed with clean water prior to completing the final connection.

Payment for such connection extension pipe, as noted in the proposal, will be made at the rate of one dollar ($1.00) per linear foot for "Water Service Pipe ¾-Inch," which shall be compensation in full for all labor, material and equipment in connection therewith, including restoration of existing improvements. Measurement for payment shall be made on the slope for the actual length of ¾-inch water service pipe installed.

74–2.12 FIELD TESTS

All new water mains and appurtenances after installation shall pass a hydrostatic test before acceptance. Such a test shall be made in accordance with these specifications as soon as practical after any complete section of water main and appurtenances is completed between gate valves or any such other convenient points of the installation, as may be determined by the Engineer, can be properly prepared for the test.

Water for hydrostatic testing shall be obtained by the Contractor from City mains and all taps or connections necessary for the hydrostatic testing shall be made by the Seattle Water Department in accordance with the provisions of Section 5.13, unless otherwise provided in the special provisions or authorized by the Engineer.

No separate payment will be made to the Contractor for hydrostatic testing. All costs therefor resulting to the Contractor for making the tests shall be included in his various unit bid prices for the water main work.

74–2.12A Blocking or Bracing (New Section)

Before conducting hydrostatic field test, all potential points of thrust movement shall be blocked or braced. Where permanent blocking or bracing is not required by the plans in accordance with the details shown on Standard Plan No. 193, or otherwise ordered by the Engineer, Standard Plan No. 192, the Contractor shall furnish and install temporary blocking for the test and remove it after testing is satisfactorily completed, and all costs therefor shall be included in the various unit bid prices for the water mains. Where concrete blocking is required, payment therefor will be made as specified in Section 74–3.

74–2.12B Equipment for Testing (New Section)

All pumps, plugs, saddles, corporations, miscellaneous hose and piping required for making hydrostatic tests shall be furnished by the Contractor. The Engineer will provide all gauges used for testing at no cost to the Contractor.

Page 72 Section 74—*Pipe Installation for Water Mains*

74–2.04D Preparation of Joint 112

74–2.04E Depth of Jointing Material 112

74–2.04F Lead 112

74–2.04G Heating and Pouring of Lead 112

74–2.04H Position of Joint Runner 112

74–2.04I Calking Lead Joints 112

74–2.05 JOINTING MECHANICAL JOINT PIPE 112

74–2.05A Cleaning and Assembling Joint 112

74–2.05B Bolting of Joint 112

74–2.06 JOINTING RUBBER GASKET JOINT PIPE (TYTON TYPE) 113

74–2.06A Cleaning and Assembling Joint 113

74–2.07 LAYING ASBESTOS-CEMENT PIPE 113

74–207A Couplings for Asbestos-cement Pipe 113

74–2.07B Cleaning and Assembling Joint 113

74–2.07C Short Lengths and Field Cut Joints 113

74–2.08 LAYING STEEL PIPE 113

74–2.08A Threaded Steel Pipe in Sizes Up to and Including 3½ Inch 113

74–2.08B Coupled Pipe 4-Inch and larger 113

74–2.09 LAYING CONCRETE PIPE 113

74–2.09A Cleaning and Assembling Joint 113

74–2.10 CONNECTIONS TO EXISTING MAINS

All connections required for the contract work to any existing water mains in use shall be made by the Seattle Water Department. Payment to the Seattle Water Department for such connections will be made as specified in Section 5.13, unless otherwise provided in the special provisions of the proposal.

The Contractor shall do all excavating necessary to prepare the site for the connection and shall furnish all crosses, tees or other specials required to be inserted in the existing main, as shown on the plans, and all other material required. After the connection has been made by the Seattle Water Department, the Contractor shall complete the final backfilling required.

74–2.10A Exploratory Holes, Shallow Depth (New Section)

Where directed by the Engineer to probe for the actual position and depth of an existing water main, or other pipe, the Contractor shall excavate and backfill exploratory holes approximately two (2) feet wide by four (4) feet in length to such depth, but not to exceed six (6) feet, as may be necessary to locate the existing pipes. Payment for such exploratory holes will be made at the unit contract price, per linear foot for "Exploratory Holes." Measurement for payment shall be from the surface of ground to the bottom of hole excavated, or to the top of pipe, whichever applies.

74–2.11 WATER SERVICE CONNECTIONS

The Seattle Water Department, in accordance with the provisions of Section 5.13 shall make all service connections of any size to new water mains.

For the purpose of supplying customers with water during the progress of a water main construction project, the City of Seattle reserves the right, after a section of pipe has passed a satisfactory hydrostatic and bacterial test, for the Seattle Water Department, with its own facilities, to tap corporation cocks into the sections of new main and install service connections at such locations they may elect, at no expense to the Contractor.

The attaching of any such service connections by the Seattle Water Department shall not be construed by the Contractor as an acceptance by the City of Seattle of any part of the work being performed under the contract.

74–2.11A Service Connections by Contractor, ¾-Inch (New Section)

Where the symbol "(X)" appears on the plans, and when a payment item for "¾-Inch Water Service Pipe" at the fixed rate of one dollar ($1.00) per linear foot appears in the contract proposal, the Contractor will be required, for each such symbol shown on the plans, to excavate a trench and to furnish all material and equipment necessary, except as hereinafter noted for water meters and final connections, to install ¾-inch copper tube service connections from the end of existing services to the location of the symbol, or as otherwise directed by the Engineer. The trench depth in which the pipe is laid shall provide a minimum backfill cover of thirty (30) inches over the top of the pipe.

After installation, testing and disinfecting of pipe as required in Section 74–2.12 and Section 74–2.13 will not be necessary, but the pipe shall be watertight and flushed clean with clear water prior to the final connection being completed.

Water meters for the service, their installation and the final connection of the new pipe for service will be the responsibility of the Seattle Water Department at no expense to the Contractor.

All work described herein for the connections shall be limited to that area within the street margins. The area so disturbed shall be restored by the Contractor after the installation insofar as practical to that which existed prior to the work being performed.

Payment as specified above, unless otherwise provided in the special provisions, shall be payment in full for all materials, tools, equipment and other work necessary to install the connections as described herein, including trench excavation, backfilling and restoration to match original surface conditions.

74–2.12 FIELD TESTS

New water mains and appurtenances, after their installation, shall pass a satisfactory hydrostatic test before acceptance. The hydrostatic test shall be performed on every complete section of main pipe between two gate valves, and each gate valve shall withstand the same test pressure as the pipe, with no pressure active in the section of pipe beyond the closed gate valves.

Water for hydrostatic testing shall be obtained by the Contractor from City mains and all taps or connections necessary for the hydrostatic testing shall be made by the Seattle Water Department in accordance with the provisions of Section 5.13, unless otherwise provided in the special provisions or authorized by the Engineer.

No separate payment will be made to the Contractor for hydrostatic testing. All costs therefor resulting to the Contractor for making the tests shall be included in his various unit bid prices for the water main work.

74–2.12A Blocking or Bracing (New Section)

Before conducting hydrostatic tests, all potential points of thrust movement that have not been provided for by permanent concrete blocking, in accordance with details shown on Standard Plan No. 192 or Standard Plan No. 193, shall be blocked and braced by the Contractor with temporary blocking for the test and removed after testing is satisfactorily completed. All costs to the Contractor for installing temporary blocking shall be included in the various unit bid prices for the water mains. Where concrete blocking is required, payment therefor will be made as specified in Section 74–3.

74–2.12B Equipment for Testing (New Section)

All pumps, plugs, saddles, corporations, miscellaneous hose and piping required for making hydrostatic tests shall be furnished by the Contractor. The Engineer will provide all gauges used for testing at no cost to the Contractor.

74–2.04D **Preparation of Joint** 112

74–2.04E **Depth of Jointing Material** 112

74–2.04F **Lead** 112

74–2.04G **Heating and Pouring of Lead** 112

74–2.04H **Position of Joint Runner** 112

74–2.04I **Calking Lead Joints** 112

74–2.05 JOINTING MECHANICAL JOINT PIPE 112

74–2.05A **Cleaning and Assembling Joint** 112

74–2.05B **Bolting of Joint** 112

74–2.06 JOINTING RUBBER GASKET JOINT PIPE (TYTON TYPE) 113

74–2.06A **Cleaning and Assembling Joint** 113

74–2.07 LAYING ASBESTOS-CEMENT PIPE 113

74–207A **Couplings for Asbestos-cement Pipe** 113

74–2.07B **Cleaning and Assembling Joint** 113

74–2.07C **Short Lengths and Field Cut Joints** 113

74–2.08 LAYING STEEL PIPE 113

74–2.08A **Threaded Steel Pipe in Sizes Up to and Including 3½ Inch** 113

74–2.08B **Coupled Pipe 4-Inch and larger** 113

74–2.09 LAYING CONCRETE PIPE 113

74–2.09A **Cleaning and Assembling Joint** 113

74–2.10 CONNECTIONS TO EXISTING MAINS

All connections required for the contract work to any existing water mains in use shall be made by the Seattle Water Department. Payment to the Seattle Water Department for such connections will be made as specified in Section 5.13, unless otherwise provided in the special provisions of the proposal.

The Contractor shall do all excavating necessary to prepare the site for the connection and shall furnish all crosses, tees or other specials required to be inserted in the existing main, as shown on the plans, and all other material required. After the connection has been made by the Seattle Water Department, the Contractor shall complete the final backfilling required.

74–2.10A Exploratory Holes, Shallow Depth (New Section)

Where directed by the Engineer to probe for the actual position and depth of an existing water main, or other pipe, the Contractor shall excavate and backfill exploratory holes approximately two (2) feet wide by four (4) feet in length to such depth, but not to exceed six (6) feet, as may be necessary to locate the existing pipes. Payment for such exploratory holes will be made at the unit contract price, per linear foot for "Exploratory Holes." Measurement for payment shall be from the surface of ground to the bottom of hole excavated, or to the top of pipe, whichever applies.

74–2.11 WATER SERVICE CONNECTIONS

The Seattle Water Department, in accordance with the provisions of Section 5.13 shall make all service connections of any size to new water mains.

For the purpose of supplying customers with water during the progress of a water main construction project, the City of Seattle reserves the right, after a section of pipe has passed a satisfactory hydrostatic and bacterial test, for the Seattle Water Department, with its own facilities, to tap corporation cocks into the sections of new main and install service connections at such locations they may elect, at no expense to the Contractor.

The attaching of any such service connections by the Seattle Water Department shall not be construed by the Contractor as an acceptance by the City of Seattle of any part of the work being performed under the contract.

74–2.11A Service Connections by Contractor, ¾-Inch (New Section)

Where shown on the plans, or where directed by the Engineer, the Contractor shall furnish and install standard weight, galvanized steel ¾-inch water service pipe connections, from a Seattle Water Department installed connection terminated with a water meter, to the location indicated and noted on the plan, or as designated by the Engineer. The connection pipe from the meter installed by the Water Department, to the end location required, shall be laid in a trench the depth of which shall provide a minimum cover for protection when backfilled of thirty (30) inches.

All pipe threads shall be cut full depth and when making connections, all male threads shall be covered with a suitable compound for lubricating the connection and making it watertight. All cut ends of pipe, before assembling, shall be reamed to full bore.

The pipe joints shall be watertight and need not be tested nor disinfected but shall be flushed with clean water prior to completing the final connection.

Payment for such connection extension pipe, as noted in the proposal, will be made at the rate of one dollar ($1.00) per linear foot for "Water Service Pipe ¾-Inch," which shall be compensation in full for all labor, material and equipment in connection therewith, including restoration of existing improvements. Measurement for payment shall be made on the slope for the actual length of ¾-inch water service pipe installed.

74–2.12 FIELD TESTS

All new water mains and appurtenances after installation shall pass a hydrostatic test before acceptance. Such a test shall be made in accordance with these specifications as soon as practical after any complete section of water main and appurtenances is completed between gate valves or any such other convenient points of the installation, as may be determined by the Engineer, can be properly prepared for the test.

Water for hydrostatic testing shall be obtained by the Contractor from City mains and all taps or connections necessary for the hydrostatic testing shall be made by the Seattle Water Department in accordance with the provisions of Section 5.13, unless otherwise provided in the special provisions or authorized by the Engineer.

No separate payment will be made to the Contractor for hydrostatic testing. All costs therefor resulting to the Contractor for making the tests shall be included in his various unit bid prices for the water main work.

74–2.12A Blocking or Bracing (New Section)

Before conducting hydrostatic field test, all potential points of thrust movement shall be blocked or braced. Where permanent blocking or bracing is not required by the plans in accordance with the details shown on Standard Plan No. 193, or otherwise ordered by the Engineer, Standard Plan No. 192, the Contractor shall furnish and install temporary blocking for the test and remove it after testing is satisfactorily completed, and all costs therefor shall be included in the various unit bid prices for the water mains. Where concrete blocking is required, payment therefor will be made as specified in Section 74–3.

74–2.12B Equipment for Testing (New Section)

All pumps, plugs, saddles, corporations, miscellaneous hose and piping required for making hydrostatic tests shall be furnished by the Contractor. The Engineer will provide all gauges used for testing at no cost to the Contractor.

74–2.12C Test Pressure and Point of Application (New Section)

The test pressure to which water mains and appurtenances shall be tested hydrostatically are as below, according to size of pipe:

Diameter Pipe-Inches	4	6	8	10	12	Over 16
Test Pressure Pounds per Square Inch	300	300	300	275	225	Class of Pipe plus 50%

The above required test pressure shall be applied at the low end of the section of water main being tested, after air in the pipe has been vented therefrom at all high points, using suitable pumping equipment for making the test.

74–2.12D Test Time Required (New Section)

The required hydrostatic test pressure shall be maintained for not less than the time required by the Engineer to determine that the section of pipe gate valves and fittings is watertight and no defective materials or workmanship are of evidence.

In the absence of finding any leaks, defective materials or workmanship, the maintenance of the test pressure without pumping for fifteen (15) minutes with no drop in pressure in excess of five (5) pounds will be evidence of a watertight installation except when testing short lengths of main pipe, or hydrants, singly as specified in Section 74–2.12F and Section 74–2.12H, respectively, maintaining the test pressure without pumping for five (5) minutes with no drop in pressure, will be evidence of a satisfactory test.

74–2.12E Defective Materials and Workmanship (New Section)

Defective materials or workmanship appearing as a result of hydrostatic field tests, or any time after tests have been completed and before final release of the contract, shall be replaced by the Contractor at his expense. Whenever it is necessary to replace defective material or workmanship, the hydrostatic test shall be re-run at the Contractor's expense until a satisfactory test is obtained.

74–2.12F Testing Sections with Hydrants Installed (New Section)

When a test is made on a section of new water main between closed gate valves, no hydrostatic pressure shall be active in the water main sections beyond the closed gate valves, except as provided hereinafter in Section 74–2.12G. When hydrants are included with the section of main pipe to be tested, the testing shall be conducted as three separate tests, the first of which shall be with the main gate valves and all hydrant auxiliary gate valves closed, with the hydrant operating stem valves and hose ports wide open.

The second test shall be applied after completion of a satisfactory first test with the main gate valves and the hydrant operating stem valves tightly closed but the hydrant auxiliary gate valves and hose ports shall be wide open.

After satisfactory completion of tests one and two above, each hydrant shall be tested singly to a pressure of three hundred (300) pounds per square inch with the hydrant auxiliary gate valve and hose ports closed, but the hydrant operating stem valve shall be wide open. No pressure above twenty-five (25) pounds per square inch (25 p.s.i.) shall be in the supply main beyond the hydrant auxiliary gate valve when testing a hydrant singly.

74–2.12G Testing Extensions from Existing Mains (New Section)

When an existing water main is extended with new pipe to a new gate valve and the distance from the existing pipe to the new gate valve is six (6) feet or less, the section of new pipe installed between the new gate valve and the end of the existing main shall be made by the Seattle Water Department with pretested, prechlorinated pipe, and no hydrostatic test will be required. When the required hydrostatic tests are conducted in the new main section beyond the installed new gate valve in the closed position, the normal pressure of the exisiting main may be present against the other side of the new gate valve.

Where the distance between the end of an existing water main pipe extension to the gate valve is more than six (6) feet, the connection of new pipe to existing pipe shall not be made until after hydrostatic tests have been made to the required pressure in both directions against the new gate valve. This shall be accomplished by a temporary cap or plug installed on the end of the new pipe as close as practical to the new gate valve for testing purposes. The short length of pipe between the temporary cap or plug end with the new gate valve in the closed position, with no hydrostatic pressure active on the opposite side of gate valves, shall be subjected to the required test pressure. The same test shall be made against the other side of new gate when that section of pipe is tested with no hydrostatic pressure active in the short section of pipe toward the existing main pipe. The final connection to the existing main shall be made by the Seattle Water Department with pretested, prechlorinated pipe.

74–2.12H Testing Hydrants Installed on Existing Mains (New Section)

Where it is required that hydrants shall be installed and connected to an existing main, they shall be installed in accordance with the standard plans except that the hydrant connection, including hydrant tee, connection pipe and six (6) inch auxiliary gate valves, shall be installed by the Seattle Water Department with pretested materials. After the hydrant connection has been made to the existing main, the hydrant installation shall be subjected to the hydrostatic test of Section 74–2.12F with the auxiliary gate valve closed.

74–2.13 DISINFECTION OF WATER MAINS

Before being placed into service, all new water mains and repaired portions of, or extensions to existing mains shall be chlorinated and a satisfactory bacteriological report obtained from the Seattle Water Department. The method used by the Contractor to chlorinate the new water mains shall be any one of the hereinafter described means, or a combination thereof at the Contractor's option. The Seattle Water Department will take the necessary bacteriological test samples.

Water for one initial flushing, as hereinafter required for cleaning pipe or flushing after chlorination, will be furnished at no cost to the Contractor, by the Seattle Water Department.

No separate payment will be made for chlorinating water mains; all costs therefor shall be included in the various unit contract prices for the construction.

74–2.13A Flushing

Sections of pipe to be disinfected shall first be flushed to remove any solids or contaminated material that may have become lodged in the pipe. If no hydrant is installed at the end of the main, then a tap shall be provided large enough to develop a velocity of at least two and one-half (2½) feet per second in the main. One two and one-half (2½) inch diameter hydrant port will, under normal pressures, provide this velocity in pipe sizes up to and including twelve (12) inch.

Taps required by the Contractor for chlorination or flushing purposes shall be provided by him but shall be installed by the Seattle Water Department and paid for in accordance with Section 5.13.

Where dry calcium hypochlorite is used for disinfection of the pipe, flushing shall be done after disinfection. The Contractor shall be responsible for disposal of treated water flushed from mains and shall, if so directed by the State Pollution Commission, neutralize the waste water for protection of aquatic life in the receiving water before disposal into any natural drainage channel. However, disposal may be made to any available sanitary sewer provided the rate of disposal will not overload the sewer.

74–2.13B Requirement of Chlorine

The initial chlorine content of water used to chlorinate new water mains before placing in service shall be not less than fifty (50) parts per million and the chlorine

treated water, after standing twenty-four (24) hours in the pipe, shall have a chlorine residual of not less than ten (10) parts per million.

74–2.13C Form of Applied Chlorine 114

74–2.13D Dry Calcium Hypochlorite 114

74–2.13E Liquid Chlorine 114

74–2.13F Chlorine-bearing Compounds in Water 115

74–2.13G Point of Application 115

74–2.13H Rate of Application 115

74–2.13I Preventing Reverse Flow

Reverse flow of strong chlorine solution from the new main being chlorinated back into the supply main shall be prevented by suitable check valves in the supply lines.

74–2.13J Retention Period

Treated water shall be retained in the pipe for not less than six (6) hours. After this period, the chlorine residual at the pipe extremities, hydrants and other representative points in the water main shall not be less than twenty-five (25) parts per million (25 PPM).

74–2.13K Chlorinating Valves and Hydrants 115

74–2.13L Final Flushing and Testing

Following chlorination, all treated water shall be thoroughly flushed from the new main, including branches, until the replacement water throughout its length upon test shows a chlorine residual not exceeding that in the existing main supplying the replacement water.

After flushing of the main, test samples shall be collected by the Seattle Water Department upon arrangements by the Engineer from sample points at all extremities of the new main. At the same time, a sample will be collected from the main supplying the replacement water to serve as a control. A satisfactory bacteriological test shall be obtained before approval of new mains.

The Contractor shall be responsible for disposal of treated water as provided in Section 74–2.13A.

74–2.13M Repetition of Flushing and Testing

Should the initial flushing and testing of a chlorinated new main result in an unsatisfactory bacterial test being obtained by the Water Department, the main shall be rechlorinated, reflushed and the bacterial test repeated until satisfactory results are obtained. Failure to have a satisfactory test shall be considered as failure of the Contractor to keep the pipe clean during the pipe laying and jointing operations, or to properly chlorinate the main.

Water required for additional chlorination and flushing through failure to obtain a satisfactory bacterial test initially, shall be paid for by the Contractor at the current rates.

74–2.14 CONCRETE BLOCKING

Concrete thrust blocking, as detailed on the plans or on the standard drawings, shall be placed at bends, tees, and crosses as directed by the Engineer. Blocking shall be Class 5 (1½) concrete mix poured in place, unless precast blocks are authorized by the Engineer.

Concrete blocking, when placed as indicated on the standard drawing No. 192, shall be bearing against solid undisturbed earth at the sides and bottom of the trench excavation and shall be shaped so as not to obstruct access to the joints of the pipe or fittings.

74–2.15 SPECIAL FITTINGS (New Section)

"Special Fittings" as a bid item in the contract applies to those standard or special cast iron pipe fittings used in water main construction that are not according to the number of such standard and special fittings shown on the plans. Standard and special fittings shown on the plans are included for payment in the units prices bid for the water main pipe.

When the number of special fittings used differs from the number shown on the plans, additional payment or deductions therefor shall be made as provided in Section 74–3.02.

74–2.16 1½ INCH BLOWOFFS (New Section)

Where indicated on the plans, water main blowoffs assemblies shall be constructed in conformance with the requirement therefor shown on Standard Plan No. 182. The blowoff assembly as a unit for payment shall include all materials called for on the standard plan, assembled complete in place to the best workmanship standards, except the drilling and tapping one and one-half (1½) inch Mueller thread tap into cast iron pipe; concrete blocking at end of cast iron pipe; the cast iron pipe; and any copper pipe required to complete the assembly in excess of one hundred (100) feet in length.

Drilling and tapping of the Mueller pipe thread into the water main shall be performed by the Water Department; concrete blocking will be paid for as provided in Section 74–3.04. When copper pipe to complete the assembly exceeds one hundred (100) feet, the additional length required shall be paid for as provided for extra work in Section 9.03 when no bid item for copper pipe is included in the proposal.

Seamless copper tubing for blowoffs shall conform to the requirements for Seamless Copper Water Tube, ASTM Designation B 88, Type K.

Galvanized steel pipe, fittings and gate valves shall conform to the requirements therefor in Section 72.

All costs resulting for excavation, backfilling and disposal of excess excavation not used for backfilling the blowoff assembly excavation shall be considered as incidental to the construction and included in the unit bid contract for the assembly as a unit.

74–3 MEASUREMENT AND PAYMENT 115

74–3.01 MEASUREMENT OF WATER MAINS 115

74–3.02 PAYMENT FOR WATER MAINS AND WATER SERVICE CONNECTIONS 115

74–3.03 PARTIAL PAYMENT FOR MATERIALS DELIVERED

Pipe delivered to the trench side, but not installed, will be included in the estimate of monthly payments to the Contractor as provided in Section 9.05A. Partial payments will not apply to materials such as pipe fittings, valves, etc., but will apply only to pipe.

74–3.04 CONCRETE BLOCKING 115

74–3.05 TRENCH EXCAVATING AND BACKFILL FOR WATER SERVICE CONNECTIONS (Not used) 115

74–3.06 1½ INCH BLOWOFFS (New Section)

The unit contract price per each for "1½ Inch Blowoffs," shall be full compensation for all labor, materials, equipment and tools necessary to install the blowoff assembly as a unit, described in Section 74–2.16.

74–4 UNIT PRICE METHOD OF PAYMENT FOR WATER DISTRIBUTION MAIN CONSTRUCTION (An Alternate Method) (Not used) 116

74–4.01 MEASUREMENT OF WATER MAINS FOR UNIT PRICE PAYMENT (Not used) 116

74–4.02 PAYMENT FOR WATER MAIN CONSTRUCTION UNDER UNIT PRICE METHOD (Not used) 116

Section 75—Gate Valves for Water Mains

75–1 DESCRIPTION

The valves shall be suitable for ordinary waterworks service intended to be installed in a normal position on buried pipe lines for water distribution systems.

The minimum requirements for all gate valves shall, in design, material and workmanship, conform to the standards of the AWWA C500-59T approved January 28, 1959, or latest revision thereof. All materials used in the manufacture of waterworks gate valves shall conform to the AWWA standards designed for each material listed. All gate valve operating stems shall be equipped with a 2-inch operating nut.

75–2 MATERIALS 116

75–2.01 MANUFACTURE AND MARKING 116

75–2.02 TYPE AND MOUNTING 116

75–2.03 END CONNECTIONS 116

75–2.04 GATE VALVES 16-INCH AND LARGER 116

75–2.05 GATE VALVE STEM SEALS 116

75–2.06 TAPPING VALVES 116

75–2.07 HYDROSTATIC TEST PRESSURE AT FACTORY 116

75–2.08 PAINTING AT FACTORY 116

75–3 INSTALLATION OF GATE VALVES

All gate valves shall be inspected upon delivery in the field to insure proper working order before installation. They shall also be carefully inspected for injury to their outer protective coatings. At all places where the coating has been ruptured or scraped off, the damaged area shall be thoroughly cleaned to expose the iron base after their installation and the cleaned area then recoated with a field paint coating that is equal in quality to Quigley Triple A-10 or Triple A-20. The valves shall be set and jointed to the pipe in the manner as set forth in the A.W.W.A. Standards for the type of connection ends furnished.

Valves 12-inch and under shall be installed in a vertical position and be provided with a standard valve chamber or cast iron gate box so arranged that no shock will be transmitted to the valve. The box shall be centered over the operating nut, and the cast iron box cover shall be set flush with the road bed or finished paved surface.

After installation, all valves shall be subjected to the field tests as described in Section 74–2.12 and should any defects in design, materials, or workmanship appear during these tests, the Contractor shall correct such defects to obtain a satisfactory test.

75–4 MEASUREMENT AND PAYMENT 117

75–4.01 PAYMENT FOR GATE VALVES 117

Section 76—Valve Chambers and Boxes for Water Mains

76–1 DESCRIPTION

This section shall apply to the construction of standard valve chambers, Standard Plan Nos. 183, 184 and 185. Such chambers may be constructed to the inside dimensions shown on the standard plans with either standard concrete precast sections, or concrete cast-in-place, or masonry constructed with standard concrete blocks, brick, clay brick, or a combination thereof at the Contractor's option, unless the choice of construction materials is limited by the special specifications of the contract.

Where valve chambers are not specified for valves, the gate valves shall be provided with cast iron valve boxes, Standard Plan No. 191, set over the operating stem, as hereinafter described.

Classification of standard valve chambers shall be in accordance with their standard plan number. In general, the kind of valve chamber, standard or large, will be identified on the construction plans as Type 183 or Type 185 valve chambers, respectively. Type 184 valve chambers will apply where the contract special specifications limit the construction materials for a circular valve chamber to standard precast valve chamber sections.

76–2 MATERIALS 117

76–2.01 RING AND COVER AND VALVE BOX CASTINGS 117

76–2.02 PORTLAND CEMENT CONCRETE BLOCKS 117

76–2.03 PORTLAND CEMENT CONCRETE 117

76–2.04 MORTAR 117

76–2.05 BRICK (New Section)

76–2.05A Concrete Brick (New Section)

Concrete brick when used, shall conform to the Specification for Concrete Building Brick ASTM C 55, Grade A.

76–2.05B Clay Brick (New Section)

Clay brick when used, shall conform to the ASTM Specification C 62, Grade SW.

76–3 CONSTRUCTION DETAILS

Valve chambers shall be constructed with suitable materials of Section 76–2, in accordance with the details shown on the standard plans and these specifications.

76–3.01 PRECAST VALVE CHAMBERS

Precast valve chambers for nominal depth of cover from 2'-6" to 3'-6" are cast in one piece with slotted holes for pipes to enter and leave the chamber.

Precast valve chambers for nominal depth of cover from 4'-6" to 6'-6" are made in two sections.

The concrete base shall be poured in place or precast. Concrete poured-in-place bases shall set a minimum of two (2) days to attain strength before placing top of chamber, unless otherwise authorized by the Engineer, and the chamber shall be set on the base in cement mortar with the slotted holes straddling the water main.

The water main pipe where it passes through the chamber wall slots, shall be wrapped with a one (1) inch thick styra foam expansion collar. The styra foam collar width shall be not less than the thickness of the chamber wall. Any space remaining between the chamber walls and the outside diameter of expansion collar shall be filled with mortar and neatly painted in a workmanlike manner. Under no circumstances shall precast chamber wall slots bear on or against the pipe.

76–3.02 CAST-IN-PLACE CHAMBERS 117

76–3.03 CHAMBERS MASONRY CONSTRUCTED (Title changer for City use)

Standard circular or rectangular gate valve chambers, Standard Plans Nos. 183 and 185 respectively, when constructed with masonry blocks or bricks in courses with mortar upon a poured-in-place concrete base slab, shall be constructed to good workmanship standards for watertight masonry work and shall conform accurately to the inside dimensions shown on the standard plans. Mortar for construction shall be mixed to the specifications therefor in Section 76–2.04.

The cement concrete base slab for the valve chamber shall be poured-in-place concrete Class 5 (1½), the top surface of which shall be neatly leveled, smoothed and finished to a uniform brush textured surface and shall have cured for not less than two (2) days after placing, before constructing the chamber thereon, unless otherwise authorized by the Engineer.

The four (4) inch drain pipe and gravel drain pocket shown on Standard Plan No. 183 shall be subject to the provision of Section 76–3.05, first paragraph.

76–3.04 SETTING CAST IRON FRAME AND COVER 117

76–3.05 VALVE CHAMBER DRAIN

Valve chamber drains, as shown on Standard Plans Nos. 69 and 70 for circular chambers shall not be constructed for Type 183 or 184 valve chambers unless

treated water, after standing twenty-four (24) hours in the pipe, shall have a chlorine residual of not less than ten (10) parts per million.

74–2.13C Form of Applied Chlorine 114

74–2.13D Dry Calcium Hypochlorite 114

74–2.13E Liquid Chlorine 114

74–2.13F Chlorine-bearing Compounds in Water 115

74–2.13G Point of Application 115

74–2.13H Rate of Application 115

74–2.13I Preventing Reverse Flow

Reverse flow of strong chlorine solution from the new main being chlorinated back into the supply main shall be prevented by suitable check valves in the supply lines.

74–2.13J Retention Period

Treated water shall be retained in the pipe for not less than six (6) hours. After this period, the chlorine residual at the pipe extremities, hydrants and other representative points in the water main shall not be less than twenty-five (25) parts per million (25 PPM).

74–2.13K Chlorinating Valves and Hydrants 115

74–2.13L Final Flushing and Testing

Following chlorination, all treated water shall be thoroughly flushed from the new main, including branches, until the replacement water throughout its length upon test shows a chlorine residual not exceeding that in the existing main supplying the replacement water.

After flushing of the main, test samples shall be collected by the Seattle Water Department upon arrangements by the Engineer from sample points at all extremities of the new main. At the same time, a sample will be collected from the main supplying the replacement water to serve as a control. A satisfactory bacteriological test shall be obtained before approval of new mains.

The Contractor shall be responsible for disposal of treated water as provided in Section 74–2.13A.

74–2.13M Repetition of Flushing and Testing

Should the initial flushing and testing of a chlorinated new main result in an unsatisfactory bacterial test being obtained by the Water Department, the main shall be rechlorinated, reflushed and the bacterial test repeated until satisfactory results are obtained. Failure to have a satisfactory test shall be considered as failure of the Contractor to keep the pipe clean during the pipe laying and jointing operations, or to properly chlorinate the main.

74–2.14 CONCRETE BLOCKING

Concrete thrust blocking, as detailed on the plans or on the standard drawings, shall be placed at bends, tees, and crosses as directed by the Engineer. Blocking shall be Class 5 (1½) concrete mix poured in place, unless precast blocks are authorized by the Engineer.

Concrete blocking, when placed as indicated on Standard Plan No. 192, shall be bearing against solid undisturbed earth at the sides and bottom of the trench excavation and shall be shaped so as not to obstruct access to the joints of the pipe or fittings.

74–2.15 SPECIAL FITTINGS (New Section)

"Special Fittings" as a bid item in the contract applies to those standard or special cast iron pipe fittings used in water main construction that are not according to the number of such standard and special fittings shown on the plans. Standard and special fittings shown on the plans are included for payment in the units prices bid for the water main pipe.

When the number of special fittings used differs from the number shown on the plans, additional payment or deductions therefor shall be made as provided in Section 74–3.02.

74–2.16 1½ INCH BLOWOFFS (New Section)

Where indicated on the plans, water main blowoff assemblies shall be constructed in conformance with the requirement therefor shown on Standard Plan No. 182. The blowoff assembly as a contract bid item shall include all materials called for on the standard plan, to the right of the water main pipe, assembled complete in place to the best workmanship standards. The unit price shall not include concrete blocking shown at the end of the water main pipe nor making the Mueller thread tap into the cast iron pipe.

Drilling and tapping of the Mueller pipe thread into the water main shall be performed by the Water Department; concrete blocking will be paid for as provided in Section 74–3.04. When copper pipe to complete the assembly exceeds one hundred (100) feet, the additional length required shall be paid for as provided for extra work in Section 9.03 when no bid item for copper pipe is included in the proposal.

Seamless copper tubing for blowoffs shall conform to the requirements for Seamless Copper Water Tube, ASTM Designation B 88, Type K.

Galvanized steel pipe, fittings and gate valves shall conform to the requirements therefor in Section 72.

All costs resulting for excavation, backfilling and disposal of excess excavation not used for backfilling the blowoff assembly excavation shall be considered as incidental to the construction and included in the unit bid contract for the assembly as a unit.

74–3 MEASUREMENT AND PAYMENT 115

74–3.01 MEASUREMENT OF WATER MAINS 115

74–3.02 PAYMENT FOR WATER MAINS AND WATER SERVICE CONNECTIONS 115

74–3.03 PARTIAL PAYMENT FOR MATERIALS DELIVERED

Pipe delivered to the trench side, but not installed, will be included in the estimate of monthly payments to the Contractor as provided in Section 9.05A.

74–3.04 CONCRETE BLOCKING 115

74–3.05 TRENCH EXCAVATING AND BACKFILL FOR WATER SERVICE CONNECTIONS (Not used) 115

74–3.06 1½ INCH BLOWOFFS (New Section)

The unit contract price per each for "1½ Inch Blowoffs," shall be full compensation for all labor, materials, equipment and tools necessary to install the blowoff assembly as a unit, described in Section 74–2.16.

74–4 UNIT PRICE METHOD OF PAYMENT FOR WATER DISTRIBUTION MAIN CONSTRUCTION (An Alternate Method) (Not used) 116

74–4.01 MEASUREMENT OF WATER MAINS FOR UNIT PRICE PAYMENT (Not used) 116

74–4.02 PAYMENT FOR WATER MAIN CONSTRUCTION UNDER UNIT PRICE METHOD (Not used) 116

Section 75—Gate Valves for Water Mains

75–1 DESCRIPTION

The valves shall be suitable for ordinary waterworks service intended to be installed in a normal position on buried pipe lines for water distribution systems.

The minimum requirements for all gate valves shall, in design, material and workmanship, conform to the standards of the AWWA C500-59T approved January 28, 1959, or latest revision thereof. All materials used in the manufacture of waterworks gate valves shall conform to the AWWA standards designed for each material listed. All gate valve operating stems shall be equipped with a two (2) inch operating nut. All gate valves shall open counterclockwise.

The City will accept only gate valves of the following named manufacture conforming to these specifications: Rensselaer, Chapman, Ludlow, Iowa, M & H Darling and Crane, in all sizes; Smith in sizes twelve (12) inch or less, and any other approved by the Board of Standardization prior to the date of contract.

75–2 MATERIALS 116

75–2.01 MANUFACTURE AND MARKING 116

75–2.02 TYPE AND MOUNTING 116

75–2.03 END CONNECTIONS 116

75–2.04 GATE VALVES 16-INCH AND LARGER 116

75–2.05 GATE VALVE STEM SEALS 116

75–2.06 TAPPING VALVES 116

75–2.07 HYDROSTATIC TEST PRESSURE AT FACTORY 116

75–2.08 PAINTING AT FACTORY 116

75–3 INSTALLATION OF GATE VALVES

All gate valves shall be inspected upon delivery in the field to insure proper working order before installation. They shall also be carefully inspected for injury to their outer protective coatings. At all places where the coating has been ruptured or scraped off, the damaged area shall be thoroughly cleaned to expose the iron base after their installation and the cleaned area then recoated with two or more field coats of Quigley Triple A-10 or Triple A-20. The valves shall be set and jointed to the pipe in the manner set forth in the AWWA standards for the type of connection ends furnished.

Valves 12-inch and under shall be installed in a vertical position and be provided with a standard valve chamber or cast iron gate box so arranged that no shock will be transmitted to the valve. The box shall be centered over the operating nut, and the cast iron box cover shall be set flush with the road bed or finished paved surface.

After installation, all valves shall be subjected to the field tests as described in Section 74–2.12 and should any defects in design, materials, or workmanship appear during these tests, the Contractor shall correct such defects to obtain a satisfactory test.

75–4 MEASUREMENT AND PAYMENT 117

75–4.01 PAYMENT FOR GATE VALVES 117

Section 76—Valve Chambers and Boxes for Water Mains

76–1 DESCRIPTION

This section shall apply to the construction of standard valve chambers, Standard Plan Nos. 183, 184 and 185. Such chambers may be constructed to the inside dimensions shown on the standard plans with either standard concrete precast sections, or concrete cast-in-place, or masonry constructed with standard concrete blocks, brick, clay brick, or a combination thereof at the Contractor's option, unless the choice of construction materials is limited by the special specifications of the contract.

Where valve chambers are not specified for valves, the gate valves shall be provided with cast iron valve boxes, Standard Plan No. 191, set over the operating stem, as hereinafter described.

Classification of standard valve chambers shall be in accordance with their standard plan number. In general, the kind of valve chamber, standard or large, will be identified on the construction plans as Type 183 or Type 185 valve chambers, respectively. Type 184 valve chambers will apply where the contract special specifications limit the construction materials for a circular valve chamber to standard precast valve chamber sections.

76–2 MATERIALS 117

76–2.01 RING AND COVER AND VALVE BOX CASTINGS 117

76–2.02 PORTLAND CEMENT CONCRETE BLOCKS 117

76–2.03 PORTLAND CEMENT CONCRETE 117

76–2.04 MORTAR 117

76–2.05 BRICK (New Section)

76–2.05A Concrete Brick (New Section)

Concrete brick when used, shall conform to the Specification for Concrete Building Brick ASTM C 55, Grade A.

76–2.05B Clay Brick (New Section)

Clay brick when used, shall conform to the ASTM Specification C 62, Grade SW.

76–3 CONSTRUCTION DETAILS

Valve chambers shall be constructed with suitable materials of Section 76–2, in accordance with the details shown on the standard plans and these specifications.

76–3.01 PRECAST VALVE CHAMBERS

Precast valve chambers for nominal depth of cover from 2′-6″ to 3′-6″ are cast in one piece with slotted holes for pipes to enter and leave the chamber.

Precast valve chambers for nominal depth of cover from 4′-6″ to 6′-6″ are made in two sections.

The concrete base shall be poured in place or precast. Concrete poured-in-place bases shall set a minimum of two (2) days to attain strength before placing top of chamber, unless otherwise authorized by the Engineer, and the chamber shall be set on the base in cement mortar with the slotted holes straddling the water main.

The water main pipe where it passes through the chamber wall slots shall be wrapped with a two (2) inch thick styra foam expansion collar. The styra foam collar width shall be not less than the thickness of the chamber wall. Any space remaining between the chamber walls and the outside diameter of expansion collar shall be filled with mortar and neatly painted in a workmanlike manner. Under no circumstances shall precast chamber wall slots bear on or against the pipe.

76–3.02 CAST-IN-PLACE CHAMBERS 117

76–3.03 CHAMBERS MASONRY CONSTRUCTED (Title changed for City use)

Standard circular or rectangular gate valve chambers, Standard Plans Nos. 183 and 185 respectively, when constructed with masonry blocks or bricks in courses with mortar upon a poured-in-place concrete base slab, shall be constructed to good workmanship standards for watertight masonry work and shall conform accurately to the inside dimensions shown on the standard plans. Mortar for construction shall be mixed to the specifications therefor in Section 76–2.04.

The cement concrete base slab for the valve chamber shall be poured-in-place concrete Class 5 (1½), the top surface of which shall be neatly leveled, smoothed and finished to a uniform brush textured surface and shall have cured for not less than two (2) days after placing, before constructing the chamber thereon, unless otherwise authorized by the Engineer.

The four (4) inch drain pipe and gravel drain pocket shown on Standard Plan No. 185 shall be subject to the provision of Section 76–3.05, first paragraph.

76–3.04 SETTING CAST IRON FRAME AND COVER 117

76–3.05 VALVE CHAMBER DRAIN

Valve chamber drains, as shown on APWA Standard Plans Nos. 69 and 70 for circular chambers, shall not be constructed for Type 183 or 184 valve chambers unless

ordered by the Engineer. When ordered by the Engineer, payment therefor will be negotiated as extra work, as provided in Section 9.03.

For large rectangular chambers, Standard Plan No. 71 or 185, the drain pipe and gravel pocket shall be incidental to the construction. The gravel drain shall consist of one-half (½) cubic yard of clean paving gravel, graded (3" to ⅜"), placed in a hole excavated below the bottom of the chamber base slab, prior to placing concrete for the base slab. In naturally porous soils, when authorized by the Engineer, the gravel pocket as described may be omitted, the pipe only shall be installed through the base slab.

76–3.06 CAST IRON VALVE BOXES

Cast iron valve boxes, as shown on Standard Plan No. 191, are placed for enclosing gate valves of small size, in lieu of gate valve chambers.

Cast iron valve boxes in general are set to position during backfilling operations so they will be in a vertical alignment to the gate valve operating stem. The lower casting of the unit is installed first in such a manner as to be cushioned by the backfill so as not to rest directly upon the pipe or the body of the gate valve. The upper casting of the unit is then placed in proper alignment and to such elevation that its top will be at final surface grade for the backfill. Backfill around both units of the valve box shall be compacted solidly into place, as necessary to sustain the lower and upper casting in place without subsequent settlement.

Payment for cast iron valve boxes will be made as specified in Section 76–4.02.

When cast iron valve boxes are part of a hydrant installation, as specified in Section 77–3.01, in accordance with Standard Plan No. 180, payment for the cast iron valve box shall be included in the unit contract price for hydrant, as specified in Section 77–4.01.

76–4 MEASUREMENT AND PAYMENT 117

76–4.01 PAYMENT FOR VALVE CHAMBERS

Payment for valve chambers, unless the choice of construction is limited by the special provisions, will be made on a per each basis for "Valve Chamber, Type 183," "Valve Chamber, Type 184," whichever is the Contractor's option for valves up to and including 12-inch set vertically; "Valve Chamber, Type 185," for rectangular valve chambers for valves 16-inch to 30-inch inclusive, laid horizontally.

In each case, payment at the unit contract price shall be in full for all materials, labor and equipment necessary to construct the chambers to the requirements of the standard plans and specifications, including excavation, backfilling and disposal of surplus excavation not needed for backfilling.

76–4.02 PAYMENT FOR CAST IRON VALVE BOXES 117

Section 77—Fire Hydrants

77–1 DESCRIPTION 118

77–2 MATERIALS 118

77–2.01 MATERIALS FOR HYDRANTS AND APPURTENANCES 118

77–2.02 MANUFACTURER AND MARKING 118

77–2.03 TYPE AND MOUNTING 118

77–2.04 END CONNECTIONS 118

77–2.05 HYDRANT DIMENSIONS

The dimensions and details of hydrant and nozzles, unless otherwise noted, shall be as follows:

	Hydrant 4-inch Connection	*Hydrant 6-inch Connection*
Hydrant connection pipe size inside dia.	4 inches	6 inches
Standpipe, minimum inside dia.	6 inches	7 inches
Length of hyd. from bottom of hyd conn. to sidewalk ring	As required by Owner	
Valve opening, minimum dia.	4 inches	5 inches
Size of auxiliary gate valve	4 inches	6 inches
Hose nozzles, number and size	2-2½ inches	2-2½ inches
Thread (Nat. Board of Fire Underwriters)	7½ per inch	7½ per inch
Outside dia. finished	$3\frac{1}{16}$ inches	$3\frac{1}{16}$ inches
Dia. at root of thread	2.8715 inches	2.8715 inches
Pattern of thread	60° V-thread	60° V-thread
Total length of threaded male nipple	1 inch	1 inch
Streamer nozzles, number and size; Thread, outside dia. finished; Dia. at root of thread; Spreads; Pattern of thread; Total length of threaded male nipple	To match Owner's exisiting pattern	
Steamer nozzles, number and size	one 4-inches	
Thread outside dia., finished	4⅞ inches	
Diameter at root of thread	4.6263 inches	
Threads	6 per inch	
Pattern of thread	60° V-thread	
Total length of threaded male nozzle	1⅛ inches	

All nozzles shall be fitted with cast iron threaded caps with operating nut of the same design and proportions as the hydrant stem nut. Caps shall be threaded to fit the corresponding nozzles and shall be fitted with suitable gaskets for positive water tightness under test pressures.

77–2.06 OPERATING NUTS 118

77–2.07 SHACKLING LUGS 118

77–2.08 SIDEWALK FLANGE CONSTRUCTION 118

77–2.09 FACTORY HYDROSTATIC TEST 118

77–2.10 PAINTING

All iron parts of the hydrant both inside and outside shall be thoroughly cleaned and painted. All inside surfaces and the outside surfaces below the ground line shall be coated with asphalt varnish, Federal Specification TT-V-51a or J. A. N. P-450, unless otherwise specified. They shall be covered with two coats, the first having dried thoroughly before the second is applied.

The outside of the hydrant above the finished ground line, after backfilling is completed, shall be thoroughly cleaned and then painted with one (1) coat of Hydrant Green paint Far West Paint Company X-148, or equal.

77–3 CONSTRUCTION DETAILS 118

77–3.01 SETTING HYDRANTS

Where shown on the plans or where designated by the Engineer, hydrants shall be installed in accordance with the detail shown on the Standard Plans Nos. 180 and 181.

All hydrants shall be inspected in the field upon arrival to ensure proper working order. After installation, they shall be subjected to a hydrostatic test not to exceed the factory test pressure.

77–3.02 HYDRANT CONNECTIONS

Hydrant connections shall consist of a section of 6-inch cast iron pipe between the main tee fitting and the hub and flange fitting, as shown on Standard Plans Nos. 180 and 181 for hydrant settings.

Payment for 6-inch hydrant connection pipe shall be made at the unit contract price per linear foot for "Water Mains," for the actual length of pipe installed, which price shall be in full for the completed, tested, installed connection pipe including excavation, painting after installation if needed as a result of damage to pipe protective coating, backfilling and disposal of surplus excavated material not needed for backfill.

77–3.02A Shackle Rods

Hydrants stall be shackled to the tee at the main with round steel rods, not reinforcing steel, threaded on both ends as indicated on Standard Plans Nos. 180 and 181. The term "shackle rods" as used herein, shall include, besides the steel rods threaded on both ends, all other steel items that become a component part of any one particular shackle rod assembly such as nuts, bolts, turnbockles, washers and any fabricated split steel collars therefor.

Payment for shackle rods will be made in the basis of weight at the unit contract price per pound for "Shackle Rods," and the weight paid for shall include all the above items used for a complete shackle rod installation.

All hydrant shackle rods after installation shall be thoroughly cleaned and painted with two (2) coats of asphalt varnish, as specified in Section 77–2.10, or such other bituminous paint as may be authorized by the Engineer.

All costs resulting to the Contractor for painting shackle rods as specified, shall be included in his unit bid price for "Shackle Rods."

77–3.02B Auxiliary Gate Valve 119

77–3.02C Cast Iron Valve Boxes 119

77–3.03 RESETTING EXISTING HYDRANTS

To reset an existing hydrant, the hydrant alone is adjusted to a new grade, or moved to a new location and is reconnected to the original hydrant tee at the main.

The method of reshackling the existing hydrant after resetting shall be determined by the Engineer and the resetting work shall in all respects conform to the requirements for new work, as required by the Standard Plans Nos. 180 and 181.

Payment for resetting hydrants and new materials used therewith will be made as specified in Section 77–4.02.

77–3.04 MOVING EXISTING HYDRANTS

To move an exisiting hydrant, it is removed from the existing hydrant tee to a new location on the main pipe where a new hydrant tee is cut into the main pipe for the new location to which the hydrant is moved and the abandoned open port of the existing tee is closed off with a cast iron plug and securely sealed and shackled. The Contractor shall do everything necessary to move hydrants to new locations except the actual cutting into the existing main to install the new tee and to close off and shackle the abandoned hydrant tee open port, which shall be by the Seattle Water Department personnel, at no cost to the Contractor, in accordance with the provisions of Section 5.13.

The Contractor's work in moving existing hydrants shall be such that the moved hydrant and its connection in the new location will conform in all respects to the requirements of new hydrant installations, as shown on Standard Plans Nos. 180 and 181. Payment for moving existing hydrant will be made as specified in Section 74–4.03.

77–3.05 RECONNECTING EXISTING HYDRANTS 119

77–3.06 HYDRANT EXTENSIONS

The minimum requirements for all flanged hydrant barrel extensions and flanged adaptors for hydrant lateral connections shall, in design, material and workmanship conform to the AWWA Standards for such castings. The drilling of the flanges on the extensions shall match the drilling of the flanges on the hydrant. The drilling of the adaptor flanges shall match those of the hydrant foot flange ond the auxiliary gate valve flange.

Hydrant extensions are classified for payment as horizontal and vertical hydrant extensions. The vertical hydrant extension differs from a horizontal extension in that costs therefor to the Contractor shall include the furnishing and installing of extension rods inside the hydrant barrel for operating the hydrant at the new height, as a result of the vertical extension. The Contractor shall condition his bid for a vertical extension accordingly for payment as provided in Section 77–4.05.

77–4 MEASUREMENT AND PAYMENT 119

77–4.01 PAYMENT FOR FIRE HYDRANTS

Payment for fire hydrants will be made at the unit contract price per each for "Hydrant 6-inch Connection," which price shall include in addition to the hydrant, the following items as shown on Standard Plans Nos. 180 and 181:

(1) 6-inch Auxiliary Gate Valve
(2) Hub and Flange Casting
(3) Concrete Bearing Block
(4) Gravel Drain Pocket and Tar Paper Covering
(5) Cast Iron Valve Box

In addition to the above items, the unit contract price shall also include all necessary excavation, painting of hydrant after installation, backfilling and disposal of surplus excavation not needed for backfill.

77–4.01A Hydrant Connection Pipe (New Section)
Refer to Section 77–3.02 for payment.

77–4.01B Hydrant Shackle Rods (New Section)
Refer to Section 77–3.02 for payment.

77–4.02 RESETTING EXISTING HYDRANTS

Payment for "Resetting Existing Hydrants" shall be made at the unit contract price per each which shall be in full for all labor, material, equipment and tools necessary to place and connect the hydrant in its new location, including excavation and backfill but shall not include payment for new shackle rods or new hydrant connection pipe necessary for resetting the existing hydrant. New shackle rods and connection pipe shall be paid for as specified in Section 77–3.02 and Section 77–3.02A, respectively.

77–4.03 MOVING EXISTING HYDRANTS

Payment for "Moving Existing Hydrants," shall be made at the unit contract price per each, which shall be in full for all labor, material, equipment, tools and any other work necessary to move and reconnect the hydrant in its new position, including excavation and backfill, but shall not include payment for new shackle rods and connection pipe necessary for moving the existing hydrant. New shackle rods and new pipe shall be paid for separately, as specified in Section 77–3.02 and Section 77–3.02A, respectively.

77–4.04 RECONNECTING EXISTING HYDRANTS

Payment for "Reconnecting Existing Hydrants" shall be made at the unit contract price per each, which shall be in full for all labor, material, equipment, tools and any other work necessary to the reconnecting of the existing hydrant to a new tee fitting installed in a new main either by a lengthening or shortening of the required connection pipe or shackle rods. The unit contract price per each shall also include all excavation and backfilling but shall not include payment for replacement of existing connection pipe or shackle rods. When existing pipe or shackle rods

are replaced, they shall be paid for as specified in Section 77–3.02 and Section 77–3.02A, respectively.

77–4.05 HYDRANT EXTENSIONS

Payment for vertical and horizontal hydrant extensions shall be made at the unit contract price bid for "Hydrant Extensions, Vertical," per pound in place, and "Hydrant Extensions, Horizontal" per pound in place. The weight so paid for shall include, for vertical extensions, the weight of flanged pipe or castings, together with the weight of additional length of hydrant operating rods, bolts, nuts, washers and gaskets.

For horizontal extensions, the same weights shall apply except no vertical additional length of operating rods will be required to make the installation.

The price paid per pound shall cover the cost, in either event, of all machine work and all labor required by the plans or ordered by the Engineer, including painting of installation with asphalt varnish as specified in Section 77–2.10 for protective covering of the entire hydrant extension installation.

Section 78—Restoration and Cleanup of Water Main Construction

78–1 GENERAL 119

78–2 CONSTRUCTION DETAILS 119

78–2.01 REMOVAL OF EXISTING STREET IMPROVEMENTS 119

78–2.02 RESTORATION OF EXISTING STREET IMPROVEMENTS

Restoring of existing street improvements shall be as specified in the applicable sections of these specifications pertaining to their construction and the measurement and payment will be as described in Section 78–3.01 and 78–3.02.

At all pavement openings where backfill is compacted into place with mechanical tampers in accordance with Section 73–2.07D and the pavement is not restored immediately, the Contractor shall place and maintain an asphalt concrete surfacing to the elevation of the existing pavement, at his own expense, until final restoration is made.

In the event backfill is placed at the direction of the Engineer without proper compaction to accommodate a critical traffic condition, and the final settlement and compaction is by traffic or otherwise, the cost of placing and maintaining the tempoary asphalt concrete surfacing to grade until final restoration is made shall be as provided for extra work in Section 9.03.

78–2.03 MAINTAINING POSTAL SERVICE

Maintenance of postal service shall be in accordance with Section 7.19 when not otherwise provided for in the special specifications. All such work shall be considered as incidental to the construction and the costs therefor included by the Contractor in the various bid items of the contract.

78–2.04 FINISHING AND CLEANUP 120

78–3 MEASUREMENT AND PAYMENT 120

78–3.01 EXISTING STREET IMPROVEMENTS

Cement concrete pavement, driveway, sidewalk, asphalt concrete pavement, or bituminous plant mix pavement will be measured and payment made therefor at the unit contract prices specified in the applicable sections pertaining to their construction, excepting however, that measurement and payment will be limited to a trench width equal to the outside diameter of the barrel of the pipe plus forty-eight (48) inches. Any surfaces requiring restoration outside of this limit which is removed or damaged by the Contractor, shall be restored by him at his own expense. Provided, however, when expansion joints or cracks exist in cement concrete pavements, within three (3) feet of the specified width for pavement payment shall be increased to the expansion or crack joint.

78–3.02 CEMENT CONCRETE CURB, CURB AND GUTTER 120

78–3.03 FINISHING AND CLEANUP 120

Section 100—Structures—General

100–1 DESCRIPTION

The provisions of this section of the specifications relate to certain structural features and incidental items which are either common to all types of structures or which may apply to any one of them.

The provisions herein are supplemental to detailed specifications for definite types of structures, and shall apply whenever they are relevant to any structure and if they are not in conflict with the special provisions or plans for the construction of the structure.

100–2 MATERIALS

The materials furnished and used shall comply with the provisions of the specification pertaining to the various materials and contract items which enter into and form a part of the completed structure.

100–3 CONSTRUCTION DETAILS

All construction details shall be in accordance with the detailed requirements described in this section and with the specifications for the various contract items involved.

100–3.01 NAME PLATES

When specified, the Contractor shall furnish and install name plates of such form, dimension, material and design as may be shown on the plans. Unless otherwise provided, the contract prices for the structures shall include the cost of the name plates.

No permanent plates or markers other than those shown on the plans or approved by the Engineer will be permitted on any structure.

100–3.02 BRIDGE DRAINS

The Contractor shall furnish and install drains in the roadway slab, of the type specified on the plans and in the locations shown thereon.

Bridge drains shall be made of cast steel conforming to the requirements outlined in Section 113–2.01.

Grating covers shall be fitted to the individual drain casting with which they are to be used and shall be ground to rest evenly and without rocking. Each grating cover shall be fastened to the drain casting with a one-quarter (¼) inch galvanized iron chain of length sufficient to allow the cover to be lifted from the casting and rotated to a vertical position. One end of the chain shall be welded to the end of the casting and the other end shall be welded to the inside face of the end grating web as shown on the plans.

To each drain casting there shall be shop welded a piece, either of standard galvanized steel or galvanized wrought iron pipe of the size, length and type as shown on the plans.

The length of steel pipe shall be galvanized in accordance with the provisions of ASTM Designation A 120, Black and Hot Dipped Zinc-coated Welded and Seamless Steel Pipe for Ordinary Uses, and the wrought iron pipe in accordance with the provisions of ASTM Designation A 72, Welded Wrought Iron Pipe. Galvanizing shall be done after cutting to length, grooving, threading or other fabrication.

After welding, the drain castings and grating covers shall be coated inside and outside with an asphaltum base, black dipping paint, approved by the Engineer. This coating shall extend over that portion of the galvanized steel pipe adjacent to the casting far enough to cover the welds.

Payment will be made at the unit contract price each for "Bridge Drains," which price shall be full compensation for furnishing, coating and installing the complete drain with grating cover, chain, and galvanized steel or galvanized wrought iron pipe outlet.

100–3.03 DOWNSPOUTS

The Contractor shall furnish and install 4-inch and 6-inch standard weight steel pipe downspouts at the locations shown and as detailed on the plans.

The downspouts shall be full length pipe sections in all straight runs. If the Contractor elects, he may use other types of couplings and fittings in lieu of the grooved couplings and fittings shown on the plans, provided they are equal and are approved by the Engineer.

All downspouts shall be hot-dipped galvanized in accordance with ASTM Designation A 120 after cutting to length, grooving, threading, bending or any other fabrication.

All fastenings of the downspouts to the structure, couplings, and pipe supports shall be galvanized in accordance with ASTM Designation A 153.

Payment for downspouts will be made at the unit contract price per linear foot for "Downspouts," which price shall be full compensation for all costs in connection with furnishing and installing the downspouts, including galvanizing and all fastenings, couplings and other items as outlined herein.

100–3.04 METAL RAILING

Care shall be used in handling metal railing in order that no scratches or abrasions occur to the rail members. Any rail members damaged by improper handling and unfit for use in the structure, shall be replaced with new material by the Contractor at his own expense.

100–3.05 CLEARING THE SITE

The Contractor shall clear all of the site of the proposed structure to the full width of the right of way, of all trees, brush, stumps and debris, in the manner outlined in Section 12, Clearing and Grubbing. When no payment is specifically provided, the cost of such clearing shall be included in the unit contract prices for the various items of the structure. Special clearing of the site such as removal of existing bridges, buildings, concrete pavements, etc., will generally be paid for at prices bid for these items, but where no such prices are provided for in the proposal, all costs in connection with this special clearing shall be included in the contract unit prices for the various items in the structure.

Removal or relocation of public or private utilities, such as telephone and telegraph lines, power lines, sewer and water lines, railway tracks and their appurtenances, shall be as in Section 5.08 or otherwise be specified in the special provisions. The work shall be done either by the Contractor or by the utility as provided therein. Where the Contractor is required to remove or relocate utilities to provide the necessary room or clearance for the completed structure and their removal is not otherwise provided for in the plans or proposal, such work shall be done as directed by the Engineer and in compliance with Sections 5.09 and 5.10 with payment upon a suitable basis as provided for extra work under Section 9.03. The City does not guarantee to the Contractor the removal or relocation of any utility that will interfere with his equipment or its operations during the construction of the structure or related works. The Contractor shall make his own arrangements for such removals or relocations at his own expense.

100–3.06 FOUNDATION DATA

Foundation data, when shown on the plans, have been obtained from test borings, test pits or other sources and represent the best information in the possession of the City Engineering Department as to the character of the underlying material at the locations actually tested.

100–3.07 ALIGNMENT AND GRADE

Structures on vertical curves, structures which have super-elevated roadways because of horizontal curves and those spans on which a definite finished camber is necessary in order to form a uniform grade line, all require special care and attention in regard to the elevation and alignment of their railings and curbs.

Bridge railings, including curbs, wheel guards, and collision rails, shall be so constructed that the finished vertical alignment or grade will be of pleasing appearance. Pronounced sags or humps in the grade line will not be permitted.

Rail and curbs on the curved portion of a structure shall be constructed, insofar as possible, after the completion of the entire roadway and sidewalk slabs. In such cases, the heights of rails and curbs may be varied with respect to the grade line of the slabs in order to produce the desired appearance.

All costs in connection with the adjustments abovementioned shall be included in the unit contract prices for the various contract items involved.

100–3.08 APPROACHES TO MOVABLE SPANS

The roadway and sidewalk slabs of approach spans adjacent to each end of movable spans, shall not be constructed until the movable span is completely erected, adjusted and placed in a closed position.

100–3.09 ERECTION METHODS

When requested by the Engineer, the Contractor shall submit for approval an outline of the method he proposes to follow in the erection of the structure, and submit four (4) copies of erection plans designed by and bearing the seal of a licensed professional engineer. This requirement shall apply particularly to steel spans of cantilever, suspension or movable type. The method of erection finally decided upon and approved shall be adhered to in its essential details, but approval by the Engineer shall not relieve the Contractor from his responsibility for the sufficiency of the method used.

100–3.10 SAFETY NETS AND STAGING

Where workmen are employed twenty-five (25) feet or more above the ground, water, or other level of construction, on bridge construction work, and it is impracticable to provide temporary decking, personal life nets shall be provided for the protection of the employees engaged in such work.

Where temporary decking is used in bridge construction work, it shall be placed directly under and as near as possible to where the work takes place, but not to exceed ten (10) feet. The openings between the planks or decking shall not exceed nine (9) inches. Decking shall be securely fastened to prevent displacement and shall extend at least six (6) feet beyond each side of the structure. A standard hand rail shall be placed on outer edges. Decking shall otherwise conform to the requirements of the Department of Labor and Industries for heavy duty scaffolds as specified in their Safety Standards for Construction Work.

When safety nets are used, they shall be constructed of at least three-eights (⅜) inch diameter No. 1 soft lay manila mesh ropes with three-fourths (¾) inch diameter border ropes. The mesh ropes shall be arranged at six (6) inch centers and be positively attached to avoid wear at each point of crossing and at points of contact with the three-fourths (¾) inch diameter border rope. Nets shall be placed directly under and as near as possible to where the work is being performed, and they shall extend at least six (6) beet beyond each side of the structure.

If the nets are expected to provide protection for workmen at heights greater than ten (10) feet above the nets, the nets should be extended proportionately beyond the six feet from the sides of the structure.

It shall be at the the option of the Contractor to place the net under the entire structure or it may be formed in sections and placed under the areas only where work progresses and men are exposed to falling.

Where the nature of the project or portions thereof make the use of nets or decking impractical, the use of same may be waived by the Supervisor of Safety of the Department of Labor and Industries upon application by the Contractor.

All costs in connection with furnishing, installing, maintaining, and removing safety nets or staging shall be considered as incidental to the construction and shall be included in the various pay items of work involved in this project.

100–3.11 NAVIGABLE STREAMS

The channels of navigable streams shall be kept clear for the safe passage of water traffic. The Contractor shall provide and maintain all necessary lights and signals in accordance with the requirements of the Corps of Engineer, U. S. Army. All material deposited in the channel shall be removed to the required depth and clearance lines.

100–3.12 ARCHITECTURAL FEATURES

Architectural treatment of the various parts of concrete structures requires that the concrete be of uniform texture and color. For this reason the Contractor shall secure all cement for the structure from the same manufacturing plant unless otherwise authorized in writing by the Engineer.

100–3.13 APPROVAL OF MATERIALS

The sources of all materials entering into the completed structure shall be approved by the Engineer. Promptly after the approval of the contract, the Contractor shall submit to the Engineer a list or lists showing the names of the firms or manufacturers from whom he proposes to secure the various materials. This requirement shall apply particularly to fabricated structural steel and machinery where prompt information regarding the fabricator is essential in order that mill and shop inspection may be arranged.

The quality of all materials shall be subject to the approval of the Engineer and to the provisions of Section 6, as they may apply.

100–3.14 FINAL CLEAN UP

Upon completion of the structure, the Contractor shall clean up the site, remove all temporary buildings, falsework, piling, lumber, equipment and debris. He shall level off and dispose of all excess excavated material not used for backfill, and fine grade the surface of all backfilled, sloped and other areas disturbed by the construction. The decks of the structures shall be swept and washed clean. The entire site and structure shall be left in a clean and workmanlike condition.

100–3.15 NORMAL TEMPERATURE

Dimensions on plans are for a normal temperature of 64° F.

100–4 MEASUREMENT

Measurement of the several items entering into the completed structures shall be in accordance with the specifications for the various items.

100–5 PAYMENT

Payment will be made at the contract prices for the various items entering into the completed structure, in accordance with the specifications for the various items.

Section 101—Concrete Structures

101–1 DESCRIPTION

The specifications of this section for cement concrete structures shall apply to all structures constructed with portland cement concrete not otherwise provided for in DIVISION II, STREETS AND RELATED CONSTRUCTION; DIVISION III, SANITARY SEWER AND STORM DRAINS; DIVISION IV, WATER DISTRIBUTION of these standard specifications. Structure in general shall apply to construction for retaining walls, culverts, dams, bridge structures, composite structures of cement concrete with structural steel or timber; water or sewerage pumping and treatment works structures. All such structures shall be constructed to conform in all respects to the proposal plans and specifications therefor.

101–2 MATERIALS

101–2.01 CONCRETE

The materials for making concrete shall be as defined in Section 107.

101–2.02 REINFORCING STEEL

Reinforcing steel used in constructing concrete structures shall conform to the specifications in Section 111–2.

101–2.03 STRUCTURAL STEEL

Structural steel for composite structures of concrete and steel shall be as defined in Section 112.

101–2.04 TIMBER

Timber and lumber when required for a composite structure of concrete and timber shall meet the requirements therefor specified in Section 114.

101–2.05 PILING

Piling when required for concrete structures shall be as defined in Section 106.

101–2.06 MISCELLANEOUS METALS

Castings, copper, bronze and other metals for use in concrete structures shall meet the requirements specified in Section 113 for the kind of metal item involved.

101–3 CONSTRUCTION DETAILS

All construction details shall be in accordance with the requirements of this section and those of the several sections referred to under Section 101–2 as they apply to proposed construction, unless otherwise stated in the special porvisions of the proposal.

101–3.01 DATE PANELS

Standard date panels shall be placed where shown on the plans. The date shown shall be for the year in which the structure is completed. All costs for making and placing date panels shall be included in the unit contract prices for concrete of the various classes.

101–3.02 FALSEWORK

The Contractor shall submit to the Engineer for approval, detailed plans for falsework or centering, in accordance with the requirements of Section 101–3.04. For calculating the strength of falsework or centering, a weight of one hundred sixty (160) pounds per cubic foot shall be assumed for fresh concrete.

In general, falsework shall be supported on piling. Mudsills for footings in lieu of piling will not be allowed except by approval of the Engineer. Falsework piling shall be spaced and driven in accordance with the approved falsework plans.

Falsework shall be set to give the structural camber indicated on the plans or as directed by the Engineer, plus an allowance for shrinkage or settlement. Compensation for falsework and falsework piling shall be incidental to the construction and included in the unit contract prices for the several pay items involved in the structure.

101–3.02A Restricted Overhead Clearance Sign

Whenever the overhead clearance over railroad tracks, traveled streets or other critical traffic right of ways will be restricted by erection of construction falsework, the Contractor shall place restricted overhead clearance signs as detailed on Standard Plan No. 214, to serve as a warning of the restricted overhead clearance. All costs therefor shall be considered as incidental to the construction of the structure and shall be included in the unit contract prices of bid items in the proposal.

101–3.03 FORMS

For the purpose of form design, concrete shall be assumed to exert on vertical surfaces the pressures per square foot as shown in the following table:

RATE OF POURING FT. PER HR.	PRESSURES, POUNDS PER SQUARE FOOT, FOR TEMPERATURE OF CONCRETE SHOWN				
	40°	50°	55°	60°	70° and Above
2	725	600	560	470	375
3	900	750	690	640	565
4	1,075	875	800	725	625
5	1,250	1,000	900	815	690
6	1,425	1,125	1,000	900	750
7	1,600	1,250	1,110	990	815
8	1,775	1,375	1,215	1,075	875

Horizontal surfaces shall be designed to withstand a pressure of one hundred sixty (160) pounds per square foot for each foot of height supported.

101–3.03A Requirements

All forms shall be set true to the lines designated, and the interior shape and dimensions shall be such that the finished concrete will conform exactly with the plans of the structure. Before proceeding with the form work for any structure, the Contractor shall submit the detailed plans of the forms he proposes to use to the Engineer for approval. The plans shall be in accordance with the requirements of Section 101–3.04.

101–3.03B Form Footings and Posts

All form footings must be properly designed to carry the maximum load that can come upon them. They shall be as nearly unyielding as possible under full load. In cases of footings on rock or coarse sand and gravel, grouting may be required to insure uniform bearing.

All systems of supports shall be provided with wedges or other devices which will permit the uniform release and take-up of forms.

101–3.03C Stringers and Beams

All stringers and beams used to support form work shall be particularly rigid; their design shall be determined on the basis of deflection, which shall not exceed 1/500 of the span under full load, unless otherwise designated by the Engineer.

101–3.03D Bracing

All bracing shall be as rigid as possible and where there is any likelihood of movement, braces shall be provided with wedges to take up such displacements.

101–3.03E Form Ties

All ties used for securing forms shall be so arranged as to allow the removal of all metal to a depth of not less than one-half (½) inch below the surface. Threaded rods are preferred but standard manufactured form ties may be used when specifically approved by the Engineer. Examination of test data or actual tests of specimens may be required by the Engineer as a condition for approval.

Wire form ties will not be allowed.

101–3.03F Face Lumber

Lumber used for facing of forms shall be plywood or matched tongue and groove lumber of good quality, not less than three-fourths (¾) inch in thickness, except that plywood one-fourth (¼) inch in thickness may be used when sufficiently backed with three-fourth (¾) inch lumber against close-spaced stud framing. The facing lumber, either plywood or matched tongue and groove, shall be free from surface defects of any kind that will prevent the obtaining of a smooth dense concrete surface requiring a minimum of surface treatment to remove form markings as specified in Setcion 107—3.14.

Forms for constructing round columns shall be a self-supporting metal shell form or a form tube which will give a smooth, even surface without markings on the concrete column after form is removed. Wood forms shall not be used for constructing round columns.

101–3.03G Oiling

Surfaces of wood forms against which concrete will be placed shall be coated with non-staining mineral oil

approved by the Engineer prior to constructing the forms in place. The oil shall be applied at a time prior to use that will allow the oil to be fully absorbed by the wood.

101–3.03H Temporary Holes in Forms

Retaining wall forms, or other forms for structures, that are over twelve (12) feet in height shall be provided with temporary construction openings eighteen inch minimum size in the forms for providing access for vibrating concrete and visual inspection when concrete is being placed in accordance with the provisions of Section 107. The maximum spacing of such temporary construction openings shall be twelve (12) feet horizontally and eight (8) feet vertically. The surfaces of plugs for closing off temporary construction openings, when placed, shall meet the requirements of Section 101–3.03F.

All forms for columns, walls, beams, slabs, etc., as necessary, shall have large cleanout openings at their lowest points, which shall not be closed until just before placing concrete, and all forms shall be thoroughly cleaned out and soaked with water before filling.

101–3.03I Steel Forms

The specifications of Section 101–3.03F, as they apply to the end result to be obtained, shall be applicable to the use of metal forms. The thickness of metal forms and their design shall be such as to construct the concrete to the exact dimensions required. When steel forms are used, special care shall be exercised to prevent harmful rusting of the form surfaces against which concrete will be placed.

101–3.03J Concrete Slab Forms on Steel Spans

Forms for roadway and sidewalk slabs on steel truss or girder spans shall be constructed to provide openings where necessary for truss or girder members.

The openings shall be made of such size that when the forms are removed there will be a clear space between the steel member and the concrete slab of at least one and one-half (1½) inches on all sides of the steel member. All costs in connection with forming openings for steel members shall be included in the unit contract price for concrete in place.

101–3.04 PLANS FOR FALSEWORK AND FORMS

The Contractor shall submit to the Engineer, for approval, four (4) copies of plans showing details of the falsework and forms intended to be used.

The falsework and form plans shall show sufficient structural details, as to construction and materials used, for a proper determination to be made of the adequacy of the forms to contain concrete, and the falsework capacity to support with safety the maximum construction loads to be placed thereon.

101–3.05 REMOVAL OF FALSEWORK AND FORMS

Forms for various parts of the structure shall not be removed before the number of days specified in the following table shall have elapsed after the placing of the concrete; the exact number of days shall be determined by the Engineer and will be dependent on curing conditions subsequent to placing the concrete:

	Cement Portland	*High-early-strength Cement*
(a) Columns and wall faces (not yet supporting loads)....	4 days	3 days
(b) Mass piers and abutments (not yet supporting loads) except pier caps and copings)	3 days	3 days
(c) Sidewalks on bridges—Sidewalk forms shall, in all cases, be released before the main girder and slab forms are released	10 days	4 days
(d) T-beam, girder, box girder and slab, cross-beams, caps, struts, and top slabs on concrete box culverts.....	14 days	5 days
(e) Trestle slabs, when supported on wood stringers.....	10 days	4 days
(f) Slabs, when supported on steel stringers or prestressed concrete girders	10 days	4 days
(g) Pier caps and copings.....	7 days	3 days
(h) Arches	21 days	3 days
(i) Railings	3 days	3 days

Items c, d, e, f, g and h apply to falsework and forms supporting the full load of the concrete. Side forms and forms not supporting loads may be removed at the end of the curing period.

Falsework under all spans shall be completely released before forms are constructed and concrete is placed in railings.

In order to determine the condition of column concrete, forms shall always be removed from columns, before releasing supports from beneath beams and girders.

Forms shall not be released from under concrete which has been placed at a temperature under fifty (50) degress Fahrenheit without first determining if the concrete has gained adequate strength without regard to the time element.

The forms for footings constructed within cofferdams or cribs may be left in place when authorized by the Engineer, provided forms so left intact, will not be exposed to view when the structure is completed. The forms supporting the roadway slab of box girder type structures shall be supported on wales or similar supports fastened, as nearly as possible, to the top of the web walls, and may be left in place.

The forms supporting the roadway slab shall not be shored to or supported on the bottom slab. All other forms shall be removed whether above or below the ground line or water level. Inside forms of hollow piers, girders, abutments, etc., shall be removed through openings provided for that purpose. The removal of forms for concrete exposed to sea water or to alkaline water or soil, shall be in accordance with the provisions of Sections 107–3.09 and 107–3.10.

In no case shall forms, centers or falsework be removed at any time without the approval of the Engineer.

101–3.06 PLACING ANCHOR BOLTS

All necessary anchor bolts in piers, abutments, or pedestals shall be accurately set, either in the original masonry, or in holes drilled after the masonry has set. If drilled, the holes shall be at least one (1) inch larger in diameter than the bolt, to afford ample room for "grouting in." If set in the original masonry, the bolts shall be placed as shown on the plans. If setting in pipe is specified, the pipe must in all cases be filled with grout as outlined for grouting shoes in Section 102–3.09.

All costs in connection with furnishing and placing grout and shims under steel shoes, shall be considered as incidental to the construction and no payment will be made therefor.

Anchor bolt sleeves into which the anchor bolts cannot be grouted until after freezing weather, shall be protected against damage from expanded ice by filling the sleeves with an approved non-vaporating antifreeze solution.

101–3.07 EXPANSION SHOES AND PLATES

Main expansion shoes and plates, under girders or slabs, may be either sliding or rolling, as shown on the plans. All sliding expansion plates shall be of bronze of the grade specified in Section 113. Sliding surfaces shall be planed true and smooth and then polished. All surfaces shall be planed in a direction paralleling the movement of the joint. Expansion plates shall be well anchored and set true to line and grade as shown on the plans. All sliding surfaces of expansion plates shall be thoroughly coated with graphite and oil just before being placed in position and special care shall be exercised to avoid placing concrete in such a manner as to interfere with their free action.

When grout is to be placed under steel shoes, the placement of the grout and the necessary steel shims shall be in accordance with Section 102–3.09.

101–3.08 DRAINAGE OF BOX GIRDER CELLS

To provide drainage for box girder cells, the Contractor shall furnish and install short lengths of three (3) inch asbestos-cement pipe, or equal, in the bottom slab at the low point of each cell. The pipe shall extend one-fourth (¼) inch below the bottom of the slab and shall not protrude above the top surface of the slab.

All costs in connection with furnishing and installing cell drainage pipes for box girder structures shall be considered as incidental to the construction and no payment therefor will be made.

101–3.09 OPENING TO TRAFFIC

Concrete structures which will support heavy vehicular traffic loads constructed with portland cement concrete shall remain closed to all traffic for at least tweny-one (21) days after placing of final concrete to complete such structures. If high-early-strength concrete is specified, the opening time to traffic shall depend on tests made by the Engineer, but in no case shall the time of opening be less than seven (7) days after final concrete for the structure is placed.

The above time of opening to traffic is applicable when temperatures are above fifty (50) degrees F. When temperatures are below fifty degrees, the time of opening to traffic shall be increased at the discretion of the Engineer.

Bridges with concrete decks shall not be opened to traffic without approval of the Engineer.

101–4 MEASUREMENT

Measurement of the various items entering into the construction of concrete structures shall be made in accordance with the specifications for the several items involved.

101–5 PAYMENT

Payment for the various items entering into the construction of cement concrete structures will be made in accordance with the specifications, at the unit contract prices for the several items involved.

All costs in connection with furnishing and installing cell drainage pipes for box girder structures, and furnishing and placing grout and shims under steel shoes, shall be considered as incidental to the construction and no payment will be made therefor.

Payment shall includes the furnishing of all materials, labor, equipment and all items required to complete the work.

Section 102—Steel Structures

102–1 DESCRIPTION

This section of specifications, as applicable, shall apply to the construction with fabricated steel of bridges, towers, tanks and composite structures of fabricated steel and other materials.

102–2 MATERIALS

The materials furnished and used shall be those prescribed in Section 112, Structural Steel, and other sections for the other items involved.

102–3 CONSTRUCTION DETAILS

All construction details shall be in accordance with the requirements prescribed in this section, Section 112, Structural Steel, and other sections for the various items involved.

102–3.01 STORAGE IN FIELD

All material shall be stored in such manner as to prevent deterioration by rust or loss of minor parts. No material shall be piled so as to rest upon the ground or in water, but must be placed on suitable skids or platforms.

102–3.02 FALSEWORK

All falsework for the concrete portions of composite structures of steel and concrete shall conform to the specifications for falsework as specified under Section 101–3.02.

102–3.03 HANDLING STEEL MEMBERS

The field assembling of the component parts of a structure shall involve the use of methods and appliances not likely to produce injury by twisting, bending or otherwise deforming the metal. No member slightly bent or twisted shall be put in place until its defects are corrected, but members seriously damaged in handling shall be rejected.

102–3.04 ALIGNMENT AND CAMBER

Before beginning the field riveting, the structure shall be adjusted to correct grade and alignment and the elevations of panel points (ends of floor beams) properly regulated. For truss spans a slight excess camber will be permitted while the bottom chords are being riveted, but correct camber and relative elevations of panel points shall be secured before riveting the top chord joints, top lateral system and sway bracing.

No riveting shall be done at compression joints until the blocking has been adjusted so that there will be full and even bearing over the entire joint.

102–3.05 STRAIGHTENING BENT MATERIALS

The straightening of bent edges of plates, angles and other shapes shall be done by methods not likely to produce fracture or other injury. The metal shall not be heated unless permitted by the Engineer, in which case the heating shall not be to a higher temperature than that producing a dark cherry red color. After heating, the metal shall be cooled as slowly as possible.

Following the completion of the straightening of a bend or buckle, the surface of the metal shall be carefully inspected for evidence of incipient fractures or other damage.

102–3.06 ASSEMBLING AND RIVETING

All field connections and splices shall be securely drift pinned and bolted as erection proceeds. With the exception of bracing, the pinning and bolting specified herein shall be accomplished for each member as it is erected before additional weight is imposed.

Important connections in trusses, girders, floor systems, etc., shall have at least 50 per cent of the holes filled. An ample number of drift pins shall be used to prevent slipping at joints and splices. Structures erected by the cantilever method shall be field bolted and pinned to 75 per cent full strength unless otherwise permitted by the Engineer.

The results obtained in the field assembling and riveting of the members of a structure shall conform to the requirements for shop assembling and riveting. Field driven rivets shall be inspected and accepted before being painted.

Field riveting shall be done before the falsework is removed unless special permission to the contrary is given by the Engineer.

102–3.07 ADJUSTING PIN NUTS

All nuts on pins shall be thoroughly tightened and the pins so located in the holes that the members shall take full and even bearing upon them. All pins shall have sufficient thread to allow "burring" after the nuts are tightened.

102–3.08 SETTING ANCHOR BOLTS

Anchor bolts shall be set in the masonry in accordance with requirements specified under Section 101–3.06, Placing Anchor Bolts. Anchor bolts shall be grouted in after the shoes have been set and the span is completely erected to line and camber.

102–3.09 SETTING AND GROUTING SHOES

Shoes shall be set on the anchor bolts provided in the masonry and shimmed up with steel shims until the pin centers are in proper position as to line and grade and with respect to each other. The bases of the shoes shall be level. The anchor bolt nuts shall then be drawn down tight and

a recheck of the pin centers shall be made. Steel shims shall be not more than two and one-half (2½) inches square and shall be placed under the webs of shoes. Not less than three-fourths (¾) of an inch of space shall be provided under shoes for grout. After the shoes have been set and the span completely erected, the space between the top of the masonry and the bottom of the shoes shall be filled with cement mortar or grout. Grout shall be composed of one (1) part high-early-strength cement to one (1) part of clean, fine grained sand, well mixed with sufficient water to produce a mix that will flow. Unpolished aluminum powder shall be added in the proportion of one (1) teaspoonful per sack of cement. Great care shall be used to work the grout under all parts of the shoes. A form shall be constructed around the base of the shoes four (4) inches outside of the base and approximately four (4) inches high. The form shall be filled to the top with grout. After the grout has set sufficiently hard, the form shall be removed and the grout outside of the shoe shall be removed to the base of the shoes and bevelled off neatly to the top of the masonry.

No additional load shall be placed on the shoe until the grout has set seventy-two (72) hours.

The above procedure for setting shoes applies to shoes for all steel spans, including shoes and turning racks on movable bridges, except that main shoes for cantilever spans shall be set and grouted in before any steel work is erected.

All costs in connection with furnishing and placing grout and shims under steel shoes shall be considered as incidental to the construction and no separate payment will be made therefor.

102–3.10 PLACING SUPERSTRUCTURE

No superstructure load shall be placed upon finished piers or abutments until the Engineer directs. In general, a minimum time of twenty-one (21) days shall be allowed for hardening of concrete before the superstructure load is placed thereon.

102–3.11 SETTING EXPANSION BEARING BED PLATES

Expansion bearing bed plates shall be set to the proper position for a normal temperature of 64° F. Adjustment shall be made for any inaccuracy in the fabricated length so that the expansion shoe will be centered at normal temperature after the dead load camber is cut.

102–3.12 AIR FOR RIVETING

Air compressors and air storage tanks shall be provided capable of delivering not less than one hundred (100) pounds per square inch of air pressure to each operating riveting hammer.

102–3.13 CONCRETE FLOORS ON STEEL SPANS

Before concrete floors are placed on steel spans, the centering under the bridge shall be released and the span supported free on its supports.

102–3.14 FILLING AND DRAINING POCKETS

All pockets in shoes, in which water or debris can be deposited, shall be painted with one coat of paving asphalt of 61-70 penetration applied hot, and the pockets then filled with asphalt concrete of approved proportions and materials. Where drain holes have been provided, they shall be plugged before the asphalt concrete is placed. The top of the concrete shall be well rounded in order that water will drain to the outsides of shoes.

Pockets in truss, girder and other members shall be provided with sufficient drain holes to drain all water from the pockets.

All costs in connection with filling pockets and providing drain holes shall be included in the unit contract prices for structural steel or cast steel.

102–3.15 PAINTING

All structural steel and all other metal parts except steel surfaces embedded in concrete, unless otherwise provided, shall be painted three (3) coats of paint conforming to the requirement outlined in Section 116, Paints and Painting. Metal surfaces embedded in concrete shall be painted one (1) shop coat of paint as specified in Section 112–3.15. The first coat of paint shall be applied immediately after the steel has been cleaned by sand blasting.

The two field coats for roadway expansion dams shall be applied a sufficient time in advance of opening to traffic to allow the paint to become thoroughly dry.

All metal surfaces which will be inaccessible for painting after erection, except those embedded in concrete, shall be painted with all three (3) coats of paint prior to erection.

The tops of all floor beams over which a slab joint occurs shall be coated on the tops and edges of the flange with a heavy mop coat of paving asphalt of 61-70 penetration applied hot, and a protective covering of 3-ply, asphalt saturated roofing felt. This coating shall be applied over the shop paint and will take the place of two field coats of paint specified for other parts of the structural steel.

102–4 MEASUREMENT

Measurement of the various items entering into the construction of steel structures shall be made in accordance with the specifications for the several items involved.

102–5 PAYMENT

Payment for the various items entering into the construction of steel structures will be made in accordance with the specifications, at the contract price for the several items involved.

Payment shall include the furnishing of all materials, labor, equipment and all items required to complete the work.

Section 103—Timber Structures

103–1 DESCRIPTION

The provisions of this section of the specifications are intended to apply to bridges constructed primarily of timber and lumber but which are in reality composite structures in which other materials are employed to a greater or lesser extent. Timber bridges as thus defined shall be built as indicated on the plans and in accordance with the provisions of the specifications pertaining to the various materials and contract items which enter into and form a part of the complete composite structure.

The provisions and details of construction herein outlined shall apply, insofar as they are pertinent, to timber structures other than bridges except as such structures may be specifically mentioned elsewhere.

103–2 MATERIALS

103–2.01 TIMBER AND LUMBER

Timber and lumber shall conform to the requirements of Section 114, Timber and Lumber. If preservative treatment is required, it shall conform also to the requirements of Section 115, Preservative Treatment for Timber, Lumber and Piles.

103–2.02 CASTINGS

Castings used on timber bridges shall conform to the requirements of Section 113, Castings, Steel Forgings, and Miscellaneous Metals.

103–2.03 BOLTS, WASHERS AND OTHER HARDWARE

Ordinary machine bolts and flat head bolts shall be made from commercial bolt stock meeting the specifications of ASTM Designation A 307, Steel Machine Bolts and Nuts and Tap Bolts, and shall be grade A. Drift bolts and dowels may be either wrought iron or medium steel. Washers may be cast iron ogee or malleable iron or may be cut from medium steel or wrought iron plate, as specified.

103–2.04 STRUCTURAL METAL

Rods, special bolts, plates, shapes and eye bars used on timber bridges and classed as structural metal shall be of structural carbon steel, conforming to the requirements of Section 112, Structural Steel.

103–2.05 OTHER MATERIALS

Materials furnished and used in the construction of timber bridges and not specifically mentioned above, shall be those prescribed for the several specifications and contract items which are to constitute the completed structure.

103–3 CONSTRUCTION DETAILS

103–3.01 STORAGE OF MATERIAL

Timber and lumber on the site of the work shall be stored in piles. Untreated material shall be open stacked at least twelve (12) inches above the ground surface, and piled to shed water and prevent warping. Creosoted timber and piling shall be close stacked, piled to prevent warping and when required by the Engineer shall be protected from the weather by suitable covering.

The ground underneath and in the vicinity of all such piles of material shall be cleared of weeds and rubbish.

103–3.02 WORKMANSHIP

Workmanship shall be first class throughout. None but competent bridge carpenters shall be employed and all framing shall be true and exact. Nails and spikes shall be driven with just sufficient force to set the heads flush with the surface of the wood. Deep hammer marks in wood surfaces shall be considered evidence of poor workmanship and sufficient cause for the removal of the workman causing them. The workmanship on all metal parts shall conform to the requirements specified for steel structures.

103–3.03 SHOP DETAILS

The Contractor shall submit to the Engineer for approval, two sets of shop detail plans of all treated timber, showing thereon the dimensions of all timbers which are cut, framed or bored. The Engineer will retain one set of the shop detail plans and return the other approved or with the corrections marked thereon. No material shall be framed or bored until the shop plans have been approved.

All plans shall be drawn on sheets each twenty-two (22) inches wide by thirty-six (36) inches long in overall dimensions, or on smaller sheets that are multiples of eight and one-half (8½) inches by eleven (11) inches.

103–3.04 HANDLING TREATED TIMBER

Treated timber shall be handled carefully without sudden dropping, breaking of the outer fibers, bruising or penetrating the surface with tools. It shall be handled with rope or chain slings and no cant dogs, peaveys, hooks or pike poles shall be used.

All cutting, framing and boring of treated timbers shall be done before treatment insofar as is practicable.

103–3.05 FIELD TREATMENT OF CUT SURFACES, BOLT HOLES AND CONTACT SURFACES

All cuts in treated piles or timbers and all abrasions after having been trimmed carefully shall be coated with two coats of hot creosote and covered with hot roofing pitch.

All bolt holes drilled in the field shall be treated with hot creosote oil, using a pressure bolt-hole treater except that if painting is required, the bolt holes shall be pressure treated with the same preservatives as used for the timber. Any unfilled holes, after being treated with the appropriate preservative, shall be filled with plugs treated with the same preservative as applied to the holes.

For structures of untreated timber, the heads of all piles, the ends, tops and all contact surfaces of sills, caps, floor beams, stringers, wheel guards, all end joints and contact surfaces of bracing and truss members, back faces of bulkheads, and all other timber in contact with earth —all these shall be thoroughly coated with two (2) coats of hot creosote oil. Particular attention is called to the necessary avoidance of stains from creosoting on surfaces that are to be painted.

In addition to the above treatment, all depressions or openings around bolt holes, joints or daps which may retain moisture and cause decay, shall be carefully sealed by means of a hot waterproofing pitch conforming to coal tar pitch AASHO Specification M 118. Type B shall be furnished unless otherwise specified. Primer for use with coal tar pitch in dampproofing and waterproofing shall conform to AASHO Specification M 117 (ASTM D 173). Special field treatment for the heads of treated piles shall be as described in Section 106–3.02G.

103–3.06 PAINTING

Unless otherwise specified, rails and rail posts shall be given two (2) coats of paint of the quality specified in Section 116–3.03, Painting Timber Structures, applied as described therein. The color of the paint shall be as shown on the plans, specified in the special provisions, or as designated by the Engineer. Metal parts other than the parts classified as hardware shall be painted with one coat of shop paint and after erection, two coats of field paint, all as specified in Section 116, Paints and Painting.

103–3.07 HOLES FOR RODS, BOLTS AND BOAT SPIKES

Holes for drift bolts and boat spikes shall be bored with a bit one-sixteenth ($\frac{1}{16}$) inch less in diameter than the bolt or spike to be used.

Holes for machine bolts, flat head bolts and dowels shall be bored with a bit of the same diameter as the bolt or dowel and holes for truss rods shall be bored with a bit of a diameter one-sixteenth ($\frac{1}{16}$) inch greater than that of the rod.

103–3.08 BOLTS, WASHERS AND OTHER HARDWARE

All bolts and other hardware, which are to be galvanized and which require bending or shaping, shall be hot forged to the required shape before galvanizing. Cold bending of such material will not be permitted because of the tendency toward embrittlement during the galvanizing process.

Washers of the size and type specified shall be used under all bolt heads and nuts which would otherwise come in contact with wood, except that washers are not required under the heads of standard flat head bolts.

All bolts shall be effectively checked by burring the threads after the nuts have been finally tightened. Vertical bolts shall have the nuts on the lower end.

In all cases where bolts are used to fasten timber to timber, timber to concrete or timber to steel, the members shall be bolted tightly together when they are installed and shall be retightened immediately prior to final acceptance of the contract. All bolts shall have sufficient additional threading to provide at least three-eights (⅜) inch per foot thickness of timber for future retightening.

Standard flat head bolts shall be used in timber bridge construction unless otherwise specified.

Nails shall be round wire of standard form. Spikes shall be wire spikes or boat spikes, as specified on the plans. Bolts, dowels, washers and other hardware, including nails, shall be black or galvanized as specified on the plans, but if not so specified, all such hardware shall be galvanized when used in treated timber structures.

103–3.09 COUNTERSINKING

Countersinking shall be done wherever smooth faces are required. Recesses formed for countersinking shall be painted with hot creosote oil and, after the bolt or screw is in place, shall be filled with hot pitch conforming to the requirements therefor in Section 103–3.05.

103–3.10 FRAMING

All lumber and timber shall be accurately cut and framed in such a manner that the joints will have a close fit over the entire contact surfaces. Mortises shall be true to size for their full depth and tenons shall make a snug fit therein. No shimming will be permitted in making joints, nor will open joints be accepted.

103–3.11 FRAMED BENTS

Untreated timber for mudsills preferably shall be of cedar. Mudsills shall be firmly and evenly bedded to solid bearing and tamped in place.

Concrete pedestals for the support of framed bents shall be carefully finished so that the sills will take even bearing on them. Dowels of not less than three-fourths (¾) inch diameter and projecting at least six (6) inches above the tops of the pedestals, shall be set in them when they are cast, for anchoring the sills. The concrete shall be of the class indicated on the plans and shall conform to the requirements of Section 107, Portland Cement Concrete for Structures.

Sills shall have true and even bearing on mudsills, piles or pedestals. They shall be drift bolted to mudsills or piles with bolt of not less than three-fourths (¾) inch diameter and extending into the mudsills or piles at least six (6) inches. When possible, all earth shall be removed from contact with the sills so that there will be free circulation of air around them.

Posts shall be fastened to sills with dowels of not less than three-fourths (¾) inch diameter extending at least six (6) inches into the posts.

103–3.12 CAPS

Timber caps shall be placed to secure an even and uniform bearing over the tops of the supporting posts or piles and to secure an even alignment of their ends. All caps shall be secured by drift bolts not less than three-fourths (¾) inch in diameter extending at least nine (9) inches into the posts or piles. The drift bolt shall be approximately in the center of the pile or post.

When the roadway grade exceeds two per cent, caps shall be bevel sawed to fit the grade.

103–3.13 BRACING

All pile bents over ten (10) feet high shall be braced transversely at each bent and longitudinally in alternate pairs of bents. Single story bracing shall not exceed twenty (20) feet. The ends of bracing shall be bolted through the pile, post or cap with a bolt not less than three-fourths (¾) inch in diameter. Intermediate intersections shall be bolted or boat spiked, as indicated on the plans. Sway bracing shall extend far enough to lap both upper or lower caps or sills and shall be bolted to the caps or sills at each end.

103–3.14 STRINGERS

All stringers carrying laminated decking and any stringer varying in depth by more than one-eighth (⅛) inch shall be sized to an even depth at bearing points.

Outside stringers shall be butt jointed and spliced, but interior stringers shall be lapped to take bearing over the full width of the cap or floor beam at each end. Joints shall be broken if stringers cover two spans and stringers shall be either toenailed or drift bolted, as specified on the plans. Stringers may be of sufficient length to cover two spans, except on sharp horizontal and vertical curves. The ends of lapped stringers on untreated timber structures shall be separated for the circulation of air by a 1"x3" strip of wood 2" shorter than depth of stringer and securely fastened across the face of one of the stringers between the lap.

Between stringers, cross-bridging or solid bridging, as shown on the plans, shall be neatly and accurately framed and securely toenailed at each end with at least two (2) nails for cross-bridging and four (4) nails for solid bridging. The size and spacing of bridging shall be as shown on the plans.

103–3.15 WHEEL GUARD AND RAILING

Wheel guards and railings shall be framed and bolted accurately in accordance with the plans and erected true to line and grade. Wheel guards shall be laid in sections not less than twelve (12) feet long, bolted through the floor plank and through the outside stringer or nailing piece with three-fourths (¾) inch bolts spaced not over four (4) feet apart. Wheel guards shall be beveled on the roadway side as shown on the plans. Wheel guard material shall be surfaced on the top edge and roadway side or may be surfaced four (4) sides (S4S). All material for railings shall be surfaced four (4) sides (S4S).

103–3.16 TRUSSES

Trusses, when completed, shall show no irregularities of line. Chords shall be straight and true from end to end in horizontal projection and in vertical projection shall show a smooth curve through panel points conforming to the correct camber. All bearing surfaces shall fit accurately. Uneven or rough cuts at the points of bearing shall be cause for rejection of the pieces containing the defects. Unless otherwise directed by the Engineer, all trusses shall be completed, swung free of their falsework and adjusted for line and camber before the hand railing is placed.

103–3.17 SINGLE PLANK FLOORS

Single plank floors shall consist of a single thickness of plank supported by stringers or joists. Unless otherwise directed by the Engineer, the plank shall be laid with the heart side down, and with tight joints. Each plank shall be spiked to each joist or nailing strip with not less than two spikes, the length of which shall be at least four (4) inches greater than the thickness of the plank. The spikes shall be placed not less than two and one-half (2½) inches from the edges of the plank. The ends of the plank shall be cut off on a straight line parallel to the center line of the roadway. The planks shall be carefully graded as to thickness and so laid that no adjacent splanks shall vary more than one-sixteenth ($\frac{1}{16}$) inch. Roadway and sidewalk plank shall be surfaced one side and one edge (SISIE) unless otherwise specified.

103–3.18 LAMINATED FLOORS

The strips shall be placed on edge and shall be drawn down tightly against the stringer or nailing strip and the adjacent strip, and while held in place shall be spiked. Each strip shall extend the full width of the deck unless some other arrangement is shown on the plans or permitted by the Engineer.

Each strip shall be spiked to the adjacent strip at intervals of not more than two (2) feet, the spikes being staggered eight (8) inches in adjacent strips. The spikes shall be of sufficient length to pass through two strips and at least half way through the third. In addition, unless bolting is specified on the plans, each strip shall be toenailed to alternate stringers with forty penny (40d) common nails and adjacent strips shall be nailed to every alternate stringer. The ends of all pieces shall be toenailed to the outside stringer. The ends of the strips shall be cut off on a true line parallel to the center line of the roadway. When bolts are used to fasten laminated floors to stringers the bolts shall be placed at the spacing shown on the plans and the pieces shall be drawn down tightly to the bolting strips. The bolt heads shall be driven flush with the surface of the deck. Double nuts or single nuts and lock nuts shall be used on all bolts. The strips shall be spiked together in the same manner as specified below.

103–3.19 PLANK SUB-FLOORS FOR CONCRETE DECKS

The plank sub-floor shall be laid surfaced side down with close joints at right angles to the center line of the roadway. The sub-floor shall be spiked in place in the same manner as specified for Single Plank Floors, in Section 103–3.17.

Floor plank shall be pressure treated with creosote as set forth in Section 115, Preservative Treatment for Timber, Lumber and Piles. The amount of creosote oil to be used shall be as shown on the plans.

103–4 MEASUREMENT

The quantities of timber, lumber and various other items which constitute a complete and accepted structure shall be measured for payment as outlined in the specifications for each individual item.

The weight of structural metal, other than hardware shall be determined in the manner specified for structural steel in Section 112.

103–5 PAYMENT

The quantities measured as above mentioned, will be paid for at the unit contract prices for the several items, which prices and payments, except as otherwise provided, shall be full compensation for all labor, material, tools and equipment and incidental work necessary to complete the structure ready for use.

The lump sum contract price for "Structural Metal" shall include full compensation for furnishing all materials, labor, tools and equipment and all incidental work necessary to install structural metal as shown on the plans. Where no item for structural metal is included in the proposal, full compensation for furnishing and placing metal parts shall be considered as included in the unit contract price for "Timber and Lumber" and no additional allowance will be made.

Section 104—(Spare)

Section 105—(Spare)

Section 106—Piling

106–1 DESCRIPTION

These specifications cover only such piling as is shown upon the plans, or ordered in writing by the Engineer. Piling under these specifications may be of any of the several types and kinds described herein.

106–1.01 TIMBER PILING

Timber piling shall be untreated, or treated with the preservatives specified in the plans and completely described in Section 115, Preservative Treatment for Timber, Lumber and Piles.

106–1.02 COMPOSITE PILING

Composite piling as contemplated under these specifications shall consist of a pile made up of two (2) timber sections, or of a reinforced concrete pile and a timber pile section.

For the composite piling made up of two (2) timber sections, the lower section shall be untreated and the upper section shall be creosote treated. For the composite piling made up of reinforced concrete and timber, the lower section shall be untreated timber and the upper section shall be either precast or cast-in-place reinforced concrete.

106–1.03 PRECAST CEMENT CONCRETE PILING

Precast concrete piles shall consist of concrete sections properly reinforced to withstand handling and driving stresses and shall conform to the dimensions and details shown on the plans.

If a square section is specified, the corners shall be chamfered one inch. Precast concrete piles may be either precast concrete piles with deformed steel reinforcing bars or precast-prestressed concrete piles with prestressed steel strands.

106–1.04 CAST-IN-PLACE CEMENT CONCRETE PILING

Cast-in-place concrete piles shall consist of steel casings or shells driven in the ground and filled with concrete.

106–1.05 STEEL PILING

Steel piling shall consist of rolled steel H pile sections or other structural steel members of the sizs and weight shown on the plans.

106–2 MATERIALS

106–2.01 TIMBER PILING

Timber piles shall have the following limiting diameters in inches:

LENGTH	BUTT		TIP
	Minimum 3 ft. above butt	Maximum 3 ft. above butt	Minimum
Feet	Inches	Inches	Inches
Under 40	12	20	8
40 to 50 Inclusive	12	20	7
51 to 70 Inclusive	13	20	7
70 to 90 Inclusive	13	20	6
Over 90	13	20	5

106–2.01A Untreated Piling

Except where specifically provided otherwise, untreated timber piling shall be Douglas fir, Western red cedar or larch. Piling for foundations shall preferably be Douglas fir. Piling shall be cut from sound, live trees and shall contain no unsound knots. Sound knots will be permitted, provided the diameter of the knot does not exceed four (4) inches or one-third (1/3) the diameter of the pile where it occurs. Any defect or combination of knots which will impair the strength of the pile shall be cause for rejection.

Piling shall be cut above the ground swell and shall have a uniform taper from butt to tip. A line drawn from the center of the tip to the center of the butt shall not fall outside the center of the pile at any point more than one per cent (1%) of the length of the pile. A spiral grain or twist in excess of one-fourth (¼) turn in ten (10) feet of length will be cause for rejection.

Untreated timber trestle piling shall have an average of at least five (5) annual rings per inch at the butt, beginning at a point three and one-half (3½) inches from the heart. At least nine (9) inches of heartwood shall show at the butt.

Ring count requirements for untreated timber foundation piling and detour trestle piling will be waived.

106–2.01B Creosote Treated

For creosote treated piling, Douglas fir timber shall be the same as for untreated piling except that the ring count requirement will be waived.

106–2.01C Composite Piles

The treated and untreated sections of composite piles shall meet the respective requirements specified above for full length treated and untreated timber piling.

106–2.02 PRECAST REINFORCED CEMENT CONCRETE PILING

106–2.02A Concrete

Portland cement or high-early-strength cement shall be used in all precast concrete piles.

The concrete for precast-prestressed piles shall have a minimum compressive strength of 6,000 pounds per square inch at the age of 28 days. The minimum compressive strength of concrete at the transfer of prestress shall be 4,800 pounds per square inch.

The concrete for other precast piles shall be Class AX.

Mixing, transporting, placing and curing concrete shall be in accordance with the provisions of Section 107, Portland Cement Concrete for Structures.

106–2.02B Reinforcing Steel

For precast-prestressed piles, each prestressing strand shall consist of bright stress-relieved wires. Each strand shall have a nominal diameter of seven-sixteenths ($\frac{7}{16}$) inches, a net area of 0.1089 square inches and a minimum ultimate strength of 250,000 pounds per square inch.

For other precast piles the reinforcing steel shall be deformed bars conforming to the requirements of Section 111, Reinforcing Steel, and to the requirements of ASTM Designation A 15, intermediate grade.

106–2.03 CAST-IN-PLACE CEMENT CONCRETE PILING

106–2.03A Steel Shells or Casings

106–2.03A1 Self-Supporting Driven Shells

The steel shells or casings shall conform to the requirements of the specifications for Steel for Bridges, ASTM Designation A 7 or ASTM Designation ! 252, Grade 2, Welded and Seamless Steel Pipe Piles.

The pipe shells shall have sufficient thickness of shell to permit driving without damage to the shell and the Contractor shall make his own determination of the shell thickness required.

Casings may be used meeting the 50,000 psi yield strength requirement as determined by mill tests, or physical tests on material as fabricated in the casings.

106–2.03A2 Mandrel Driven Steel Shells

Mandrel driven steel shells shall have sufficient thickness of shell to permit driving without any damage to the shell and the Contractor shall make his own determination of the shell thickness required.

106–2.03B Concrete

Class AX concrete shall be used in all cast-in-place reinforced concrete piles. Mixing, transporting, placing and curing shall be in accordance with the specifications in Section 107, Portland Cement Concrete for Structures.

106–2.03C Reinforcing Steel

Reinforcing steel for cast-in-place concrete piling shall be deformed steel bars conforming to the requirements of Section 111, Reinforcing Steel.

106–2.04 STEEL PILING

The material for steel piling shall conform to the requirements of the specifications for Steel for Bridges, ASTM Designation A 7. This materials specification shall apply to the pile caps and splice plates as well as to the pile section itself.

106–3 CONSTRUCTION DETAILS

106–3.01 GENERAL PROVISIONS

106–3.01A Ordering Piling

All piling, with the exception of cast-in-place concrete piling, and steel piling, shall be ordered by the Contractor in accordance with an itemized list which will be furnished by the Engineer. This list will show the number and length of piles required and will be based on information secured from the driving of test piles or other data available to the City. The lengths shown on this list shall be the lengths required below cutoff and the Contractor shall increase the lengths, at his own expense, the necessary amount to provide for fresh heading and to reach from the cutoff elevation up to the position of his driving equipment.

In the case of cast-in-place concrete piling, and steel piling, no order list will be furnished by the Engineer and the Contractor shall determine the length required from the results obtained by the driving of the test piles called for on the plans and subsurface exploration data.

106–3.01B Piling Ordered and Not Driven

Piling purchased in accordance with the Engineer's itemized list, but not incorporated in the finished structure, shall be immediately delivered to and become the property of the City. The purchase of additional piles or piles of a greater length than those shown on the Engineer's list shall be at the Contractor's risk.

106–3.01C Piles Destroyed in Handling or Driving

Any pile which is damaged or destroyed before or at the time it is being driven shall be replaced by the Contractor at his own expense.

106–3.01D Preparation for Driving

Foundation pits, including construction of cofferdams or cribs where required, shall be completely excavated before the driving of foundation piles is begun. Allowance for upheaval of the pit bottom, due to driving the piles, shall be made, the amount of allowance depending upon the character of the material through which the piles are to be driven. Any material forced up between the piles to above the elevation shown for the bottom of the foundation pit shall be removed to the correct elevation before the foundation masonry is placed. In the event that too great an allowance is made for upheaval due to driving of piles, backfilling with gravel will, in general, be permitted to raise the pit bottom to the correct elevation.

106–3.01E Penetration

In general, the penetration for any pile shall be not less than ten (10) feet in hard material and not less than twenty (20) feet in soft material. For foundation work, piles shall not be used to penetrate a very soft upper stratum overlying a hard stratum unless the piles penetrate the hard material a sufficient distance to rigidly fix the bottom of the pile.

Unless otherwise specified, all piling driven into previously placed embankment material shall be driven to penetrate through the embankment material with full bearing secured in the underlying foundation material.

To secure the minimum general depths of 10 feet and 20 feet respectively, in hard and soft materials, to penetrate hard material underlying a soft upper stratum and to penetrate through a previously placed embankment, the Contractor shall employ whatever means are necessary to secure the required penetration without injury to the pile.

In addition to the minimum load bearing capacity and/or penetration as specified, the Contractor shall, if directed by the Engineer, overdrive each pile to such additional penetration as requested, provided however, that jetting or other unusual means will not be required to secure the additional penetration. If the Engineer specifically directs the Contractor to drive piles over the minimum bearing capacity specified and/or beyond the minimum penetration specified, the Contractor will not be required to remove or replace the pile at his own expense because of damage resulting from such overdriving.

106–3.01F Elevation of Cutoff

The tops of all piles shall be sawed or cut to a true plane as shown on the plans, and at the elevation fixed by the Engineer. Piles which support timber caps or grillages shall be sawed to the exact plane of the superimposed structure and shall exactly fit it. Broken, split or misplaced piles shall be withdrawn and properly replaced.

106–3.01G Piles Driven Below Cutoff

Piles driven below the cutoff elevation without the Engineer's authority shall be withdrawn and replaced by new and, if necessary, longer piles at the expense of the Contractor. All piles raised during the process of driving adjacent piles shall be driven down again if required by the Engineer.

106–3.01H Equipment for Driving

106–3.01H1 Hammers

Timber piles shall be driven with either drop hammers, steam or air driven hammers, or a combination of water jets and hammers. Underwater hammers may be used, subject to approval of the Engineer. Drop hammers shall weight not less than 3,000 pounds for piles less than fifty (50) feet long and not less than 4,000 pounds for piles over fifty (50) feet long. If a drop hammer is used for driving timber piles, it is preferable to use a heavy hammer and operate with a short drop. The maximum height of drop shall be ten (10) feet.

Steam or air driven hammers for driving timber piles shall develop not less than 13,000 foot-pounds of energy per blow.

Steel shells for cast-in-place concrete piles and steel piles, shall be driven with steam or air hammers developing not less than 13,000 foot-pounds of energy per blow.

Precast concrete piles shall be driven with a single acting steam or air hammer developing not less than 13,000 foot-pounds of energy per blow.

Diesel pile hammers will be approved for driving timber piles, steel piles and steel shells for cast-in-place concrete piles, providing the ram weighs not less than 3,600 pounds and the energy developed exceeds 13,000 foot-pounds of energy per blow. Diesel pile hammers will not be approved for driving precast concrete piles.

The Contractor shall furnish the Engineer with the manufacturer's specifications and catalog for all steam, Diesel or air hammers used, showing all the data necessary for computing the bearing value of piles driven. Gravity or drop hammers shall be weighed in the presence of the Engineer, or a certificate of weight shall be furnished to the Engineer. Hammers so weighed shall have the exact weight stamped on them.

106–3.01H2 Leads

Fixed lead pile drivers shall be used when driving all piles. The use of hanging or swinging leads will not be allowed unless they are so constructed that they can be held in a fixed position during the driving operations. Leads shall be of sufficient length so that the use of a follower will not be necessary, except as hereinafter provided for timber piles. When driving treated timber piles the use of spuds and chocks in the leads shall be kept at a minimum in order that the protective treatment will not become bruised or broken. Leads adapted to the driving of batter piles shall be employed for trestle construction or for foundation work involving inclined piles.

106–3.01H3 Water Jets

Water jets shall not be used unless, in the opinion of the Engineer, such use is necessary or desirable. When water jets are used, the number of jets and the volume and pressure of the water at the jet nozzles shall be sufficient to freely erode the material adjacent to the pile. The plant shall have sufficient capacity to deliver at all times at least one hundred (100) pounds per square inch pressure at two (2) three-fourths (¾) inch jet nozzles. Before the desired penetration is reached the jets shall be withdrawn and the piles shall be driven with the hammer to secure the final penetration and baring value. Two water jet pipes and nozzles shall be used. Piles previously driven that become loosened due to the use of the water jets shall be redriven in place or pulled and a new pile driven. A careful check shall be made during driving of piles to determine if the piles are becoming loosened, by attempting to redrive at least one pile in very five piles. No allowance will be made for cost to the Contractor for redriving of loosened piles due to the use of water jets.

All costs resulting from the use of water jets shall be included in the unit contract price for driving piles and no additional compensation will be allowed.

106–3.01I Test Piles

When specified on the plans or ordered by the Engineer, the Contractor shall drive test piles to determine the lengths of piling required to obtain the necessary load carrying capacity or penetration. These piles shall be driven at the locations designated by the Engineer and shall be of sufficient length to provide for any variation in soil conditions. Test piles shall be of the same material as the permanent piles which are to be driven. Test piles for treated timber piles may be either treated or untreated timber piles conforming to the requirements of these specifications. Steel shells or casing used as test piles for cast-in-place concrete piles, and precast concrete and steel test piles shall have the same cross section and other characteristics as the permanent piles.

Driving equipment used to drive test piles shall be the same as that to be used for driving the permanent piles.

106–3.01J Loading Tests

When specified or required by the Engineer, the size and number of piles shall be determined by actual loading tests. In general, these tests shall consist of the application of test loads placed upon a suitable platform supported by the pile, together with suitable apparatus for accurately determining the superimposed weight and the settlement of the pile under each increment of load. The safe allowable load shall be considered as fifty (50) per cent of that load which, after forty-eight (48) hours' application, causes a permanent settlement of not more than one-fourth (¼) inch, measured at the top of the pile.

106–3.01K Alignment of Piles

Piles shall be driven as accurately as possible in true line and position. All piles shall be vertical unless otherwise specified or shown on the plans.

106–3.02 TIMBER PILES

106–3.02A Peeling

106–3.02A1 Untreated and Creosote Treated Piles

Untreated and creosote treated piles shall be peeled by removing all of the rough bark and at least 80% of the inner bark. No strip of inner bark remaining on the stick shall be over three-fourths (¾) inch wide or over eight (8) inches long, and there shall be at least one (1) inch of clean wood surface between any two such strips. Not less than 80% of the surface on any circumference shall be clean wood. All knots shall be trimmed close to the body of the pile.

106–3.02A2 Composite Piles

Composite piles shall be peeled in the same manner as untreated and creosote treated piles.

106–3.02B Storage and Handling

The method of storing and handling shall be such as to avoid injury to the piles. Special care shall be exercised to avoid breaking the surface of treated piling, and cant hooks or pike poles shall not be used. Cuts or breaks in the surface of treated piling shall be given three (3) brush coats of hot creosote oil of approved quality. Cuts or breaks may also be cause for rejection of piling for use in the structure.

Treated piling shall be close stacked and piled to prevent warping.

The ground underneath and in the vicinity of the piles shall be cleared of weeds, brush and rubbish.

106–3.02C Preparation for Driving

106–3.02C1 Fresh Cut Heads

Timber piles, treated and untreated, shall be fresh cut on the butt end just before placing in the leads for driving. Caps, collars or bands shall be placed on the butt end of the pile when the pile is being driven in hard material to avoid crushing or brooming the head of the pile. When the area of the head of any timber pile is greater than that of the face of the hammer, the pile shall be snipped or chamfered to at least the depth of the sap to avoid splitting of the sap from the body of the pile during driving.

106–3.02C2 Followers

Followers. made of steel, with driving head and cap made to fit snugly over the head of the pile, may be used when driving timber piles. The use of wood followers will not be permitted.

All timber piles shall preferably be driven by striking directly on the head of the pile without the use of cushions, blocks or followers. When followers are used, one pile from every group of ten (10) shall be a long pile driven without a follower, as a test pile to determine the bearing power of the group.

106–3.02C3 Pointing and Placing Metal Shoes

Timber piles preferably shall be driven with squared ends; however, when conditions require, they may be pointed or shod with metal shoes of a design satisfactory and subject to the approval of the Engineer.

106–3.02C4 Splicing

Full length piles shall always be used where practicable, but if splices cannot be avoided the method of splicing shall be subject to the approval of the Engineer.

106–3.02D Pile Bents

The location of all piles shall be "spotted" by pegs set to true line and position. For pile bents, the piles shall be reasonably uniform in size to avoid undue bending or distortion of sway bracing. Piles shall be driven with a variation of the portion above the ground of not more than one-fourth (¼) inch per foot from the vertical or batter indicated. Excessive pulling or stressing of piles in a bent to bring them into suitable line and position for cutoff and capping will not be permitted. The Contractor will be required to remove and redrive piles that do not meet the above tolerance without undue stressing.

Cutoff of piles for a pile bent shall be accurately made to ensure perfect bearing between cap and piles. No shimming on top of any pile will be permitted.

106–3.02E Splicing Composite Piles

Composite untreated timber and treated timber piles, where shown on the plans, shall be driven the same as other timber piles, except that the lower or untreated pile shall first be driven to approximately the ground or water line before splicing the two sticks together. Splices shall usually consist of lengths of steel pipe securely fastened to both the untreated and the treated piles with spikes or bolts. The untreated piles shall have the butt end rounded to form a tight driving fit into the pipe splice. The treated piles shall have the tip end rounded, prior to treatment, to form a tight driving fit into the pipe splice. The composite pile shall then be driven to the required penetration or bearing value. Composite piles shall be driven in such a manner that the position of the splice will be well into the ground to provide lateral support for the pile, and also below the level of permanent ground water.

Before ordering lengths of piles for timber composite piles, the relative positions of the ground line and the permanent water table shall be carefully determined and the piles ordered accordingly.

106–3.02F Penetration

The minimum penetration shall be approximately ten (10) feet and the Contractor shall employ whatever means as may be necessary to secure this peneration without injury to the pile.

106–3.02G Treatment of Pile Heads

The heads of all untreated piles, except those encased with concrete, shall be thoroughly coated with two coats of hot creosote oil.

The heads of all treated piles, except piles covered with concrete footings or concrete caps, after being cut to correct elevation, shall be given three (3) brush coats of hot creosote oil. They shall then be capped with a covering built up of alernate layers of hot pitch or approved roofing asphalt, and waterproofing fabric conforming to the requirements of Section 118–2.02 using four (4) layers of pitch and three (3) layers of fabric. The cover shall measure at least six (6) inches more in each dimension than the diameter of the pile top. The cover shall be bent down over the pile and the edges fastened with large headed galvanized nails or secured by binding with three (3) turns of galvanized wire. The edges of the fabric shall be trimmed around the pile to give a neat appearance.

106–3.02H Elevation of Pile Tops

Where untreated timber piles are used for foundations, the tops of the piles shall be kept well below the plane of permanent ground water or low water level.

106–3.02I Determination of Bearing Values

In the absence of loading tests, the safe bearing values for timber piles shall be determined by the following formulas:

$$P=\frac{2WH}{S+1.0} \quad \text{for gravity hammers}$$

$$P=\frac{2WH}{S+0.1} \quad \text{for single-acting steam or air hammers}$$

$$P=\frac{2H(W+Ap)}{S+0.1} \quad \text{for double-acting steam or air hammers}$$

Where P=safe bearing power in pounds.

W=weight in pounds, of striking parts of hammer.

H=drop of hammer or stroke of ram, in feet.

A=area of piston in square inches.

p=steam pressure in pounds per square in. at the hammer.

S=the average penetration in inches per blow for the last five (5) to ten (10) blows for gravity hammers and the last ten (10) to twenty (20) blows for steam or air hammers.

The above formulas are applicable only when:

(a) The hammer has a free fall.

(b) The head of the pile is free from broomed or crushed wood fiber.

(c) The penetration is at a reasonably quick and uniform rate.

(d) There is no sensible bounce after the blow. Twice the height of the bounce shall be deducted from "H" to determine its true value in the formula.

The Engineer may require the installation of an adequate pressure gauge at the inboard end of the hose for the purpose of checking the pressure at the hammer.

The bearing power of timber piles, as determined by the foregoing formulas, shall be considered effective only when they are less than the crushing strength of the piles. Unless otherwise specified on the plans, timber piling driven under these specifications shall have the following minimum bearing values as determined by actual test loads or by the foregoing formulas:

(a) Timber piles in foundations, 20 tons.

(b) Timber piles for trestle bents, 15 tons.

In case water jets are used in connection with driving, the bearing power shall be determined by the above formulas from the results of driving after the jets have been withdrawn or a test load applied.

106–3.03 PRECAST CONCRETE PILING

106–3.03A Forms

Forms for precast concrete piles shall conform to the general requirements for concrete form work, as provided herein under Section 101. Forms shall be accessible for tamping and consolidation of the concrete.

106–3.03B Reinforcement

Reinforcing bars, hoops, shoes, etc., shall be placed as shown on the plans. All parts shall be well wired and tied together and placed to the spacings shown. All reinforcement shall be in place in the forms before any concrete is placed.

106–3.03C Casting

Piling may be cast either in a vertical or horizontal position. Care shall be exercised to vibrate and tamp the concrete around the reinforcement to avoid the formation of gravel pockets. The use of internal vibrating tampers will be required when placing concrete in forms. Concrete shall be placed continuously in each pile, special care being exercised to avoid horizontal of diagonal cleavage planes, and to see that the reinforcement is properly embedded in the concrete.

106–3.03D Finishing

As soon as the forms are removed, concrete piles shall be carefully pointed with a 1:2 mortar, filling all cavities or irregularities. Trestle piling exposed to view shall be finished above the ground line in accordance with the provisions governing the finishing of concrete columns. Foundation piling, that portion of trestle piling which will be below the ground or low water surface, and piles for use in salt water or alkali soils shall not be finished except by pointing as above set forth.

106–3.03E Curing

Precast concrete piling shall be cured with water. The concrete shall be kept wet continuously for a period of not less than 10 days when portland cement is used, and not less than 3 days when high-early-strength cement is used. Side forms may be removed at any time after twenty-four (24) hours from the placing of the concrete, provided the air temperature surrounding the concrete is maintained at a minimum temperature of fifty (50) degrees Fahrenheit for a period of five (5) days when portland cement is used or three (3) days when high-early-strength cement is used. Piling shall not be subjected to any handling stresses until the concrete for precast-prestressed concrete piles has attained a strength of at least 4,800 pounds per square inch or the class AX concrete for other precast piles has attained a strength of at least 3,300 pounds per square inch, as determined by test cylinders cured with the piling. Test cylinders shall be cast with each set of piles as they are poured.

If approved by the Engineer, precast concrete piling may be cured with saturated steam. If steam curing is used, the temperature of the concrete shall not be raised above 100° F. for a minimum of two hours after it has been placed. After the two-hour period, the temperature of the concrete may be raised to a maximum of 150° F. in increments not to exceed 25° F. per hour. The maximum temperature may be held until the concrete has reached a compressive strength of 3,600 pounds per square inch. The concrete shall be cooled in increments not to exceed 20° F. per hour by reducing the amount of heat applied. Where steam curing is used, the units must be kept covered for at least 24 hours after casting. After the units have been removed from the casting bed, they shall be protected, as necessary, to avoid cooling at a rate greater than 20° F. per hour.

If steam curing is used, the unit must be so arranged on the casting bed that the entire surface of each unit is enveloped in saturated steam.

If steam curing is used, the Contractor must provide a recording thermometer so arranged and calibrated that a continuous 24-hour record of the temperature of the enclosure is maintained. A printed record of the hourly temperature readings, properly dated and identified, shall be available for inspection by the Engineer at all times that steam curing is being used. The thermometer and recording device shall be accurate within ± 5° F.

106–3.03F Storage and Handling

The method of storing and handling shall be such as to eliminate the danger of fracture by impact or undue bending stresses in curing or transporting the piles from the forms and into the leads. In general, concrete piles shall be lifted by means of a suitable bridle or sling attached to the pile at points not over twenty (20) feet apart and not more than ten (10) feet from the ends of the pile. In no case shall the method of handling be such as to induce stresses in the reinforcement in excess of twelve thousand (12,000) pounds per square inch, allowing one hundred (100) per cent of the calculated load for impact and shock effects. In handling piles for use in sea water or alkili soils, special care shall be exercised to avoid injury to the surface of the pile.

Piles shall not be subjected to any handling stress until a test cylinder, made from the concrete pour for the piles involved and cured with the piles, shows a compressive strength as specified in Section 106–3.03E, Curing.

106–3.03G Age Before Driving

Precast concrete piles shall not be driven until a test cylinder, made from the concrete pour for the piles involved and cured with the piles, shows a strength of at least 6,000 pounds per square inch for precast-prestressed piles or 4,000 pounds per square inch for other precast piles.

106–3.03H Protection of Head

The heads of all precast concrete piles shall be protected during driving by caps of approved design, with a suitable cushion next to the pile head and fitting into a casting, which in turn supports a shock block. The diameter of the inside of the cap shall be determined before the pile is cast and the head of the pile shall be formed to make a loose fit inside the cap.

106–3.03I Extensions or Build-ups

Extensions, splices or "build-ups" on precast concrete piles, when necessary, shall be made as follows after the driving is completed:

For precast-prestressed piles, any spalled concrete shall be removed and the pile shall be fresh-headed to provide a top surface that is perpendicular to the axis of the pile. Holes one and one-fourth (1¼) inches in diameter and twenty-six (26) inches deep shall then be drilled into the pile head between prestressing strands for grouting No. 6 deformed reinforcing steel bars of the required length. After grouting the form work shall be constructed to place concrete for the required build-up height for the pile. Concrete for the build-up shall be Class AX.

For other precast piles the concrete at the head of the pile shall be cut away a depth of forty (40) diameters of the bar size of the vertical reinforcing steel. The final cut of the concrete shall be perpendicular to the axis of the pile. Reinforcement similar to that used in the pile shall be firmly fastened to the projecting steel and the necessary formwork shall be placed, care being exercised to prevent leakage along the pile. The concrete in the build-up shall be of the same quality as that used originally in the pile.

Just prior to placing concrete, the top of the pile shall be thoroughly moistened. The forms shall remain in place at least three (3) days. Spliced piles shall not be driven.

106–3.03J Determination of Bearing Values

In the absence of loading tests the bearing values of precast piles shall be determined by the formulas under Section 106–3.02I.

Unless otherwise specified on the plans, precast concrete piles shall be driven to develop a bearing value of not less than thirty (30) tons for thirteen inch (13-inch) diameter or thirty-five (35) tons for sixteen inch (16-inch) diameter piles.

106–3.04 CAST-IN-PLACE CONCRETE PILES

106–3.04A Steel Shells or Casings

106–3.04A1 Self-supporting Driven Shells

The steel shells or casings for cast-in-place piles shall be of adequate strength and rigidity to permit their driving, and to prevent distortion caused by soil pressure or the driving of adjacent piles. The shells shall also be suffiiciently watertight to exclude water before and during the placing of the concrete.

The shells may be straight, tapered, or a combination of straight and tapered.

Tapered shells shall have a minimum outside butt diameter of twelve (12) inches for a minimum distance of 15 feet below cutoff elevation or original ground line whichever is the lower elevation and a minimum outside tip diameter of eight (8) inches. The average outside diameter of the pile shall not be less than ten (10) inches. For pile shells with a fluted or corrugated section, the diameter shall be measured from crest to crest of flutes or corrugations. The tip point of casings shall be provided with a steel driving point having a wall thickness of not less than three-fourth (¾) inches and this driving point shall be welded to the pile shell.

106–3.04A2 Mandrel Driven Steel Shells

Mandrel driven steel shells for cast-in-place piles shall conform in all respects for strength, rigidity, watertightness, diameter, driving point, and other comparable controlling factors specified for self-supporting driven shells in Section 106–3.01A1.

106–3.04B Driving Steel Shells

The top of the steel shell shall be protected with a combination driving head and pilot of proper size for the hammer to insure a properly distributed blow and to prevent damage to the shell during driving. Both the hammer and the pile shall be supported in rigid leads.

Pile shells shall be driven in true alignment at the locations shown on the plans and shall be plumb or battered as indicated thereon. All pile shells in each

footing shall be driven and left empty until inspected and approved by the Engineer and no shell shall be driven within fifteen (15) feet of a pile, the concrete in which has not been set for at least seven (7) days when the concrete is reinforced with bars and 48 hours when the concrete does not enclose reinforcing steel bars.

106–3.04C Cutting Off Steel Shells

The pile shells after being driven, inspected and approved, shall be cut off on a horizontal plane at the required elevation.

106–3.04D Inspection

After being driven and prior to placing concrete and reinforcing steel therein, the steel shells shall be examined for collapse or reduced diameter at any point. Any shell which is improperly driven or broken or shows partial collapse to such an extent as to materially decrease its bearing value will not be accepted, and shall be replaced by the Contractor at his own expense. Driven shells shall be clean and free of water before concrete and reinforcing steel are placed. The Contractor shall have available at all times a suitable light for inspection of the shells throughout the entire length, before the shells are filled with concrete and reinforcing steel.

106–3.04E Determination of Bearing Values

In the absence of loading tests the bearing values of cast-in-place concrete piles shall be determined by the formulas under Section 106–3.02I. Unless otherwise specified on the plans, steel shells shall be driven to develop a bearing value of at least thirty (30) tons.

106–3.04F Reinforcement

Reinforcement for cast-in-place piles shall be sufficient to provide not less than six (6) three-fourths (¾) inch round bars conforming to the requirements of ASTM Designation A 15, intermediate grade, or four (4) No. 5 high strength steel bars conforming to the requirements of ASTM Designation A 431, shall extend a minmum of fifteen (15) feet below the ground line, or longer where called for on the plans, excepting however, that where self-supported steel casings are used which provide more than one-eighth (⅛) inch shell thickness, no reinforcement will be required.

All bars shall be rigidly fastened together in a single unit which shall be lowered into the shell before the concrete is placed. No loose bars will be permitted. The reinforcements shall be carefully positioned and securely fastened in such a manner as to insure proper clearance between the reinforcing bars and the pile shell. The spiral reinforcement shall be No. 2 gauge Spiral Hooping at six (6) inch centers, unless noted otherwise on the plans and in the special provisions.

106–3.04G Placing Concrete

Concrete shall be placed continuously in each pile, proper care being exercised to fill every part of the shell and to work the concrete around the reinforcement without displacing it. All debris and water shall be removed from the shell before concrete is placed. Placing of concrete in shells containing water will not be permitted. In case the water cannot be removed, the shell shall be pulled or filled with sand and a new shell shall be driven.

106–3.04H Trestle Piles

Where cast-in-place concrete piles are used for trestle bents, the metal shells or casings shall not extend above the finished ground line. The piles above the finished ground line shall conform to the details shown on the construction plans therefor. The reinforcing steel for the section of pile above the ground line shall extend a minimum of four (4) feet into the lower section to tie the two sections together. Payment for splicing and building up the pile shall be in accordance with the unit contract price per linear foot for "Furnishing Concrete Piling" and no other compensation will be allowed.

106–3.05 STEEL PILES

106–3.05A Storage and Handling

The method of storing and handling steel piles shall be such as to avoid injury to the piles. Bent or kinked piles which cannot be straightened without injury to the metal will be rejected.

106–3.05B Driving

Piles shall have square-cut ends and the heads shall be protected during driving by a metal cap made to fit the head of the pile.

Piles shall be driven in true alignment at the locations shown on the plans and shall be plumb or battered as indicated thereon.

106–3.05C Splicing

Splicing of steel piles will, in general, be permitted subject to the approval of the Engineer as to the necessity for splicing and the manner in which the splice is to be made.

106–3.05D Capping

When specified on the plans, steel piles after being cut off at the required elevation shall be capped with a steel plate. In such cases the pile top shall be cut square and as smooth as practicable. The pile cap shall consist of a steel plate of the size and shape shown on the plans. The method of attachment of the pile cap shall be by electric welding in the amount and in the manner shown on the plans.

106–3.05E Determination of Bearing Values

In the absence of loading tests the bearing values of steel piles shall be determined by the formulas under Section 106–3.02I. Unless otherwise specified on the plans, steel piles shall be driven to develop the following bearing values:

8″ H-pile sections	24 tons
10″ H-pile sections	32 tons
12″ H-pile sections	40 tons
14″ H-pile sections	48 tons

106–5 MEASUREMENT AND PAYMENT

Payment will be made for such of the following bid items as are included and shown in any particular contract:

1. "Driving Timber Piles (untreated or name treatment)," per each.
2. "Driving Timber Composite Piles," per each.
3. "Driving Concrete Piles," per each.
4. "Driving Steel Piles," per each.
5. "Furnishing and Driving (as specified) Test Piles," per each.
6. "Furnishing Timber Piling (untreated or name treament)," per linear foot.
7. "Furnishing Concrete Piling," per linear foot.
8. "Furnishing Steel Piling," per linear foot.
9. "Pile Splices(Timber)," per each.
10. "Pile Splices (Steel)," per each.
11. "Pile Loading Test," lump sum.

Payment for the furnishing and driving of piles of the various types in place other than test piles, shall be included in the following bid items, except as may be modified in Sections 106–5.01 to 106–5.05, inclusive, for each particular kind of piling.

a. "Driving (kind) Piles," per each.
b. "Furnishing (kind) Piling," per linear foot.

No additional compensation over the contract price for "Driving (kind) Piles" will be made for driving piles to the additional penetration as directed by the Engineer and as provided in Section 106–3.01E excepting that if driving to an additional penetration of more than three (3) feet is required, the cost to the Contractor of driving more than three (3) feet additional penetration will be paid for on the basis of "Force Account Work" as covered in Section 9.04.

Measurement for "Driving (kind) Piles" shall be the number of piles driven in place.

Measurement for "Furnishing (kind) Piling," shall be made in accordance with Sections 106–5.01 to 106–5.04, inclusive, for each particular kind of piling.

As provided in Section 4.03, no compensation in addition to the unit contract prices will be allowed for any increase or decrease in the quantities as shown in the proposal for furnishing and driving piling as a result of information gained from the driving of test piles.

106–5.01 TIMBER PILING

Payment for "Furnishing Timber Piling (untreated or name treatment)," shall be made at the unit contract price per linear foot for the number of linear feet actually driven below cutoff or as shown on the Engineer's order list.

The unit contract prices per each for "Driving Timber Piles (untreated or name treatment)," and per linear foot for "Furnishing Timber Piling (untreated or name treatment)," shall be full compensation for piling ordered but not driven. The prices shall include the furnishing of all materials, tools, equipment, labor, and all expenses incidental thereto. The cost of all materials, labor, tools and equipment necessary for treatment of the pile head, as specified in Section 106–3.02G shall be included in the unit contract price for "Driving Timber Piles (untreated or name treatment)."

106–5.02 COMPOSITE PILING

106–5.02A Treated Timber and Untreated Timber

A composite pile made with two (2) or more sticks spliced together will be considered as one (1) pile.

Payment for "Furnishing Timber Piling (name treatment)," and for "Furnishing Timber Piling (untreated)," will be made at the unit contract prices per linear foot for the number of linear feet actually driven below cutoff or as shown on the Engineer's order list for each type of pile used.

Payment of pile splices will be made at the unit contract price per each for "Pile Splices (timber)" for the number of splices made in accordance with the plans or as ordered by the Engineer.

The unit contract price per each for "Driving Timber Composite Piles" per linear foot for "Furnishing Timber Piling (untreated or name treatment)" and per each for "Pile Splices (Timber)," shall be full compensation for the piling in place. The prices shall include the furnishing of all materials, tools, equipment, labor and all expenses incidental thereto. The unit contract price per each for "Driving Timber Composite Piles" shall also include the cost incidental to treatment of pile heads as specified in Section 106–3.02G.

The unit contract price for "Furnishing Timber Piling (untreated or name treatment)," shall be full compensation for piles ordered but not driven.

106–5.02B Reinforced Concrete and Untreated Timber

A composite pile made with an untreated timber lower section and a reinforced concrete upper section spliced together will be considered as one (1) pile. The reinforced concrete upper portion may be either precast concrete conforming to Section 106–3.03 or cast-in-place concrete conforming to Section 106–3.04 except as provided in Section 106–3.04H.

Payment for "Furnishing Timber Piling (untreated)" and for "Furnishing Concrete Piling" will be made at the unit contract price per linear foot for the number of linear feet actually driven below cutoff or as shown on the Engineer's order list for those piles not used.

Payment for pile splices will be made at the unit contract prices per each for "Pile Splices" for the number of splices made in accordance with the plans, or as ordered by the Engineer.

The unit contract prices per each for "Driving Composite Piles" per linear foot for "Furnishing Timber Piling (untreated)," per linear foot for "Furnishing Concrete Piling" and per each for "Pile Splices" shall be full compensation for the piling in place. The prices shall include the furnishing of all materials, tools, equipment, labor and all expenses incidental thereto.

The unit contract prices for "Furnishing Timber Piling (untreated)" and for "Furnishing Concrete Piling" shall be full compensation for piles ordered but not driven.

106–5.03 CEMENT CONCRETE PILING

Payment for "Furnishing Concrete Piling" will be made on the following basis:

Precast Concrete Piling: Payment will be made at the unit contract price per linear foot for "Furnishing Concrete Piling" for the number of linear feet actually driven below cutoff or shown on the Engineer's order list.

Cast-in-place Concrete Piling: Payment will be made at the unit contract price per linear foot for "Furnishing Concrete Piling" for the number of linear feet actually driven below cutoff and no Engineer's order list will be furnished.

In case build-ups or splices are necessary on precast concrete piles, the built-up length will be paid for at three (3) times the unit contract price per linear foot for "Furnishing Concrete Piling," the length of build-up will include the length cut off of the pile first driven for making the splice. For precast-prestressed concrete piles the built-up length will include the length in which holes are drilled and reinforcing bars are grouted. No allowance will be made for build-ups which are made necessary by damage to the pile during driving. The entire spliced pile shall be considered as one (1) pile.

The unit contract prices per each for "Driving Concrete Piles" and per linear foot for "Furnishing Concrete Piling" shall be full compensation for the piling in place. The prices shall include the furnishing of all materials, steel shells, reinforcement, tools, equipment, labor and other expenses or items necessary for casting, curing, driving, splicing and cutting off the piles.

106–5.04 STEEL PILING

Payment will be made at the unit contract price per linear foot for "Furnishing Steel Piling" for the number of linear feet actually driven below cutoff and no Engineer's order list will be furnished.

The unit contract prices per each for "Driving Steel Piles" and per linear foot for "Furnishing Steel Piling" shall be full compensation for piling in place. The prices shall include the furnishing of all materials, tools, equipment, labor and expenses incidental thereto.

No payment will be made for splices.

106–5.05 TEST PILES

When test piles are driven to determine the lengths of piles required, they will be paid for at the contract price for "Furnishing and Driving Test Piles," which price shall be full compensation for furnishing and driving the test piles to the bearing capacity or penetration required by the Engineer and for pulling the piles or cutting them off, as required, and for removing them from the site or for delivery to the City for salvage when so ordered by the Engineer. This price shall also include all costs in connection with moving all pile driving equipment or other necessary equipment to the site of the work and for removing all such equipment from the site after the piles have been driven. After test piles have been furnished but not all of them are driven, if the Engineer eliminates driving of the remaining test piling from all or any remaining part of the proposed work, no additional compensation will be allowed for moving the pile driving equipment to and from the site of the work.

When steel piles are used for test piles, they shall be driven in place of permanent piles and the number of piles called for on the plans shall be reduced by the number of test piles thus driven in place of permanent piles. They shall be driven to a minimum load bearing capacity of fifteen (15) tons more than the minimum load bearing capacity specified for the permanent piles.

If, in the opinion of the Engineer, any test pile is damaged by handling or driving to the extent that it is unfit for use as a permanent pile, the damaged pile shall be removed and replaced at the Contractor's own expense. If the Engineer specifically directs the Contractor to drive the test pile to more than 15 tons over the minimum

bearing capacity specified for permanent piling, the Contractor shall overdrive the test pile as directed, but will not be required to remove and replace the test pile at his own expense because of damage resulting from such overdriving.

Timber piles, precast concrete piles, or cast-in-place pile shells when used as test piles shall not be used in place of permanent piles and shall be driven outside of the footing. Test piles shall be cut off one foot below the finished ground line. Cast-in-place concrete pile shells driven outside of the footing shall be filled with sand.

106–5.06 LOADING TESTS

When loading tests are required, payment will be made on the basis of the unit contract price for "Pile Loading Tests" or, in the absence of such a price, will be paid for upon force account basis.

The contract price shall include the cost of all materials, equipment, labor and expenses incidental to constructing the loading platform, procuring and placing the loading materials, and the removal and disposal of the platform and material.

When payment for loading tests is made on a force account basis, deduction will be made for such costs of material, tools and equipment as would have been incurred in any event if loading tests had not been required.

Section 107—Portland Cement Concrete for Structures

107–1 DESCRIPTION

Concrete masonry shall consist of a mixture of cement, fine aggregate, coarse aggregate and water, in the approximate proportions specified for the several classes of concrete hereinafter designated. It shall be designed to produce at least the minimum allowable compressive strength required for the various classes of concrete.

107–2 MATERIALS

107–2.01 CONCRETE

The materials used for making concrete for structures, except for proportioning of the mixes and their classification as hereinafter specified, shall conform in all respects to the requirements for cement, fine aggregates, coarse aggregates and water as specified therefor in Sections 39—2.01 through 39—2.03B for making portland cement concrete for concrete pavements.

107–2.02 PLASTIC WATERSTOP

Plastic waterstops shall conform to the following specifications:

Material

The waterstops shall be fabricated from a plastic compound, the basic resin of which shall be polyvinyl chloride. The compound shall contain any additional resins, plasticizers, inhibitors or other material such that, when the material is compounded, it shall meet the performance requirements given in this specification.

Single-pass reworked material of the same composition generated from the fabricator's waterstop production may be used. No reclaimed polyvinyl chloride shall be used.

All waterstops shall be molded or extruded in such a manner that any cross section will be dense, homogeneous and free of porosity and other imperfections. The waterstops shall be symmetrical in shape, of a cross section as shown on the plans, unless otherwise provided in the special provisions.

Tests of Materials

The waterstops shall meet all the physical and other test requirements for this material as defined in the proceedings of the Journal of the American Concrete Institute, Vol. 30, June, 1959; and the Contractor shall furnish such sample material as required by the Engineer for the purpose of making tests.

107–2.03 RUBBER SEALED EXPANSION JOINTS

The joint filler shall have outside dimensions of two (2) inches high and one and three-quarters (1¾) inches wide with tubular walls three-sixteenths ($\frac{3}{16}$) inch thick, and shall be made from stock composed of a high grade tread compound, made exclusively from new plantation rubber, reinforcing carbon black, zinc oxide, accelerators, antioxidants and softeners.

The poured rubber sealer shall conform to the City Materials Laboratory, current Specifications for Concrete Joint Sealer. Copies of these specifications, including methods of testing, may be obtained from the City Materials Laboratory.

As listed in the Materials Laboratory Specifications, the physical properties of the joint sealer, when mixed in accordance with the manufacturer's recommendations, are as follows:

(a) Color: Gray or black:

*(b) Viscosity: Must be pourable and self-leveling at 50 degrees F.

*(c) Application Life: Not less than 3 hours at 72 degrees F. and 50% Relative Humidity.

(d) Set to Touch: Not more than 24 hours at 72 degrees F. and 50% Relative Humidity.

(e) Curing Time: Not more than 96 hours at 72 degrees F. and 50% Relative Humidity.

(f) Non-Volatile Content: Not less than 92%.

(g) Hardness Rating (Durometer "Shore A"): 5-35.

(h) Resiliency: Not less than 80%.

(i) Bond Extension Test: Shall pass four cycles of the bond extension test at 0 degrees F., using surface-dried test blocks, and two cycles using soaked blocks and specimens.

Joint sealer primer is described in the Materials Laboratory Specifications as follows:

Suitable primer, if required by the manufacturer, shall be furnished with each joint sealer. The primer shall be suitable for brush or spray application at 50 degrees F. or higher, and shall cure sufficiently at 50 degrees F. to pour the joint within 24 hours. It shall be considered as an integral part of the sealer system. Any failure of the sealer in the test described herein, attributable to the primer, shall be grounds for rejection or re-testing of the sealer.

Acceptance of joint sealing compound for use on a project shall be on the basis of laboratory tests of samples representative of each batch of material to be used on the job. A period of at least two weeks shall be allowed for completion of tests. Each container of the compound shall be clearly identified as to batch number. A one quart sample shall be taken from each batch in the shipment delivered to the job site. A one-half pint sample of the accelerator and of the primer, if any, to be used shall accompany each of the quart samples of sealer.

*Viscosity and application life may be waived, providing material is mixed and placed by pump and mixer approved by the Engineer.

107–3 CONSTRUCTION DETAILS

107–3.01 CLASSIFICATION—CONCRETE MIXES FOR STRUCTURES

Concrete for structures shall be of nine classes depending on the strength, workability and maximum size of aggregates required in various parts of the structure.

Classes of concrete for the several parts of the structure shall be as shown on the plans or as outlined below:

(a) Classes A, AX and E concrete shall be used in thin and heavily reinforced members, in all floor slabs subject to the abrasive action of traffic, and in all beams and girders. They shall be used, also, in all railings, arch ribs and arch rings.

(b) Classes B and F concrete shall be used in all reinforced sections other than those covered by classes A, AX and E concrete.

(c) Classes C and G concrete shall be used only in unreinforced sections of footing blocks, pier shafts and webs, heavy walls and other mass construction.

(d) Classes D and H concrete shall be used where concrete is deposited under water.

Unless otherwise specified, portland cement shall be used for all of the above classes of concrete. When high-early-strength cement is required, it will be specified in the plans and in the proposal by the suffix (HES). Thus, when Class A concrete using high-early-strength cement is required, it will be designated as "Concrete Class A (HES)."

107–3.02 PROPORTIONS FOR STRUCTURE CONCRETE MIXES

107–3.02A Concrete Design Strength

The classes of concrete referred to in Section 107–3.01 are designed on the following assumptions regarding minimum ultimate compressive strength at the age of 28 days and the amount of mixing water required for satisfactory placement:

CLASS OF CONCRETE	A and E	B and F	C and G	D and H	AX
Compressive strength pounds per square inch	3,600	3,000	2,300	3,600	4,000
Maximum total mixing Water in gallons per ninety-four (94) pound sack of cement	5.0	5.75	6.75	5.0	5.0

The design strength of Class D and Class R concrete is 3,600 pounds per square inch. However, due to the manner of placing, the assumed strength of Class D and Class H concrete is 2,200 pounds per square inch.

Concrete mixes shall be proportioned as specified in the following tables. The weight of each size of aggregate is the estimated quantity to be used with one sack of cement (94 lbs.).

TABLE I

(Proportions by Weight—1¼"Maximum Size Aggregate)

CLASS OF CONCRETE	A	B	C	D	*AX
Sacks of cement per cubic yard	6.5	5.75	5.0	6.5	7.0
Pounds of dry No. 1 fine aggregate	210	255	267	180	184
Pounds of dry No. 2 coarse aggregate	280	315	383	310	266

*If the aggregate used in the concrete develops not less than 95 per cent of the strength of washed sand and gravel from Steilacoom, Washington when tested, in accordance with Section 39–2.02C5, the following proportions of cement and aggregates may be used in Class AX concrete:

Sacks of cement per cubic yard	6.5
Pounds of dry No. 1 fine aggregate	210
Pounds of dry No. 2 coarse aggregate	280

TABLE II

(Proportions by Weight—2½"Maximum Size Aggregate)

CLASS OF CONCRETE	E	F	G	H
Sacks of cement per cubic yard	6.0	5.25	4.5	6.0
Pounds of dry No. 1 fine aggregate	214	264	283	183
Pounds of dry No. 2 coarse aggregate	224	257	318	245
Pounds of dry No. 3 coarse aggregate	112	128	159	122

The essential requirement for each class and designed age of concrete shall be the cement content in sacks per cubic yard of concrete as specified in the above tables. The proportions of the various sizes of aggregate are given as a guide to show the approximate quantities required to produce concrete with the stated cement content. The Engineer will compare the actual cement content of the mixed concrete with the quantity required for concrete of the class that is being produced. In case there is a difference, the quantities of aggregates shall be altered so that the correct amount of cement will be present in the mixed concrete.

If, in the judgment of the Engineer, the workability and finishing characteristics of the concrete can be improved by altering the relative proportion of fine to coarse aggregate, as given in tables of this section, such changes shall be made when so ordered by the Engineer.

The weights shown for each size of aggregate are based on an assumed bulk specific gravity of 2.67 for each size of aggregate. In case the actual bulk specific gravity of any aggregate differs from this value, the weights shall be adjusted in proportion.

Correction of weights shall also be made for the quantity of water held by the aggregates at the time of weighing.

The volumes of the fine aggregate shown above are based on measurements in a dry condition. In case the fine aggregate contains moisture, proper correction shall be made for the bulking effect.

The above mixtures using portland cement are designed to produce the desired compressive strength at the end of twenty-eight (28) days. The above mixture using high-early-strength are designed to produce the desired compressive strength at the end of ten (10) days. Concrete having the desired compressive strength at intermediate periods may be designed by the Engineer, using mixtures of portland cement and high-early-strength cement.

The quantity of water shown in the tables is estimated to be the maximum required to produce a satisfactory consistency. The quantity is the total water added at the mixer and the free water held by the aggregate.

The various materials entering into and composing the concrete shall be such as to satisfy the requirements specified above.

107–3.02B Air-entrained Concrete

When air-entrained concrete is called for on the plans or in the special provisions, such concrete shall be produced as specified in Section 39–3.02 for air-entrained concrete.

107–3.02C Water Reducing Additive

When required by the Engineer, additives shall be used in the concrete placed in a structure deck slab.

The additive, approved by the Engineer, shall retard the setting time of the concrete, reduce the total mixing water required to obtain the specified slump, and increase the compressive strength of the concrete at 28 days at least five (5) per cent. The drying shrinkage of concrete containing the additive shall not exceed 110% of the concrete without the additive mixed at the same slump and using the same aggregates and the same cement content. Drying shrinkage shall be measured on 3"x3"x-11¼" prisms which are moist cured for 7 days, followed by drying for 14 days at 73.4° F. ±2° F. in air with a relative humidity of 50 ±2%. Change in length of the specimens during the 14-days curing period, measured to the nearest 0.0001", is defined as the drying shrinkage. Details of the test procedure may be obtained from the Materials Laboratory. The air content of the concrete containing the additive shall not exceed six (6) per cent.

The additive shall be used at the rate recommended by the manufacturer and as directed by the Engineer. It shall be in liquid form, and shall be introduced by means of an automatic dispensing device approved by the Engineer, or it may be added manually by pouring it on the aggregate in the skip of the mixer. In case the additive is added manually a quantity shall first be diluted with water, in proportions as directed by the Engineer, such that a volume of not less than one (1) quart of the diluted solution is measured and added to each batch of concrete.

If required by the Materials Laboratory the additive shall be tested before use. A one-quart sample shall be submitted for test. The sample shall be accompanied by a detailed data sheet from the manufacturer giving the following information:

1. Recommended amount of additive to be used at a temperature between 70 degrees F. and 110 degrees F.

2. Approximate amount of air-entrained in a 6½ sack concrete mix per unit of additive added.
3. Recommended reduction in total mixing water in a 6½ sack concrete mix per unit of additive in terms of gallons of water per sack of cement or percentage of total mixing water.
4. Average compressive strength of concrete containing the additive at 7, 28 and 90 days compared to the same mix without the additive.
5. Volume of change of concrete containing the additive compared to the same mix without additive.
6. Effect on setting time of concrete per unit of additive with complete description of method used to determine setting time.
7. Effect of using the additive at twice and four times the recommended rate on setting time, air content, drying shrinking and compressive strength of the concrete.

When the Engineer requires that an additive be used, the Contractor will be reimbursed for the actual cost of the additive plus a sum equal to eighteen (18) per cent thereof in accordance with paragraph two, Section 9.04. The actual cost of the material plus eighteen (18) per cent shall be full compensation for all costs in connection with furnishing the additive and incorporating it in the concrete, as outlined herein.

For the purposes of providing a common porposal for all bidders, and for that purpose only, when additives are required, the Engineer will estimate the amount of force account for the item of work above described and will arbitrarily enter the amount in the bid proposal to become a part of the total bid by the Contractor.

107–3.03 STORAGE OF CONCRETE AGGREGATES

Except as may be provided in the special provisions of the proposal, or authorized by the Engineer, fine and coarse aggregates for concrete shall not be stored upon the work site.

107–3.04 STORAGE OF CEMENT

Portland cement shall be stored in such a manner as to permit of easy access for proper inspection and identification of each shipment. Bulk cement for City use shall not be stored in the same bin with cement which is to be used for other purposes. Cement shall be adequately protected from rain and dampness at all times. Any cement which in the opinion of the Engineer contains lumps that will not be pulverized in the mixer shall be rejeceted.

High-early-strength cement stored by the Contractor for a period longer than 30 days, or portland cement stored by the Contractor for a period longer than 60 days shall be held for re-test. If the cement has lost strength during the period of storage, as shown by tests of the Materials Laboratory, sufficient additional cement shall be added to the mix at the Contractor's expense to overcome such loss of strength, or the cement shall be rejected. The amount of cement to be added to the mix shall be determined by the Engineer and shall be final and binding upon the Contractor.

107–3.05 MEASURING MATERIALS

Cement shall be measured by the sack of ninety-four (94) pounds net. Unless specifically authorized by the Engineer in each case, batches of concrete shall be so adjusted that fractional sacks are not required. When permitted by the Engineer, the addition of fractional sacks shall be accomplished by actual weight. For this purpose the Contractor shall provide suitable scales and shall station a workman whose sole duty is to make such weights.

If cement is handled in bulk it shall be weighed on scales meeting the requirements of Section 21, Weighing Equipment.

Proportions of fine and coarse aggregates shall, unless otherwise provided in the special provisions, be measured by weight, making proper corrections for the free water held by the aggregates.

The weighing of the fine aggregate and each size of coarse aggregate shall each be a separate and distinct operation, the weight for the particular aggregates being proportional to their respective bulk specific gravities. The equipment for weighing aggregate shall comply with the requirements for weighing equipment in Section 21.

107–3.06 MIXING CONCRETE

107–3.06A Machine Mixing

Concrete shall be thoroughly mixed in a batch mixer of an approved size and type and one so designed as to positively insure a uniform distribution of the materials throughout the mass. Batches shall be proportioned on the basis of integral sacks of cement.

In general, all concrete shall be mixed for a period of not less than one (1) minute after all materials, including water, are in the mixer, except classes D and H concrete, which shall be mixed one and one-half (1½) minutes. Less mixing time may be allowed by the Engineer for special types of mixing equipment if tests indicate that equal or better results are obtainable.

During the period of mixing, the drum shall operate at the speed for which it has been designed. Such speed, however, preferably shall be not less than one hundred seventy-five (175), nor greater than two hundred twenty-five (225) feet per minute at the periphery of the drum, and not less than fourteen (14), nor more than twenty (20) revolutions per minute. The entire contents of the mixer shall be removed from the drum before materials for the succeeding batch are placed therein, and the mixer preferably shall be equipped with mechanical means for preventing the addition of aggregates after mixing has commenced.

The mixer shall be equipped with a water measuring device conforming to the requirements of Section 39–3.03C2 and preferably shall be equipped with a batch meter or other device for accurately recording the number of revolutions for each batch, and an attachment for automatically locking the charging device so as to prevent the emptying of the mixer until the materials have been mixed the minimum specified time. No mixer shall be operated above its rated capacity and no mixer shall be used which has a rated capacity of less than a two (2) sack batch.

The first batch of concrete materials placed in the mixer shall consist of a mixture of sand, cement and water sufficient to cover the inside surface of the mixing drum with a coating of cement mortar. Upon the cessation of mixing for any considerable length of time, the mixer shall be considered as incidental to the work and no compensation will be made for it.

107–3.06B Hand Mixing

Hand mixing will not be permitted, except in case of emergency and under written permission from the Engineer.

107–3.06C–Ready-mixed Concrete

Ready-mixed concrete may be used if approved by the Engineer. Approval will be given if investigation of the plant and delivery system indicates that concrete delivered to the site of the project will conform in all respects with the applicable requirements of Section 39–3.08 for ready-mixed concrete.

107–3.06D Retempering

Concrete shall be mixed only in such quantities as are required for immediate use, and shall be used while fresh before initial set has taken place. Any concrete in which initial set has begun shall be wasted and not used in the work. No retempering of concrete will be allowed.

107–3.07 CONSISTENCY

The quantity of mixing water to be used in each case shall be determined by the Engineer, and no changes shall be made without his consent. In general, a mixture shall be used which contains the minimum amount of water consistent with the required workability.

In Class D concrete, a wetter consistency will be required than with other classes of concrete. With this exception, the consistency of concrete mixtures shall be such that:

1. The mortar will cling to the coarse aggregate.
2. The concrete will not be sufficiently fluid to segregate when transported to the place of deposit.
3. The concrete, when dropped directly from the discharge chute of the mixer, will flatten out at the center of the pile but will stand up and not flow at the edges.
4. The mortar will show no free water when removed from the mixer.
5. The upper layer of the set concrete will show a cement film upon the surface but will be free from laitance.

107–3.08 PLACING CONCRETE

Concrete placing operations for concrete structures or parts thereof shall not be started by the Contractor without first obtaining approval from the Engineer, and the concrete placing shall proceed, after starting, continuously until the structure or portion of structure being placed has been completed between expansion joints, or construction joints, or such other limits as required and shown on the plans, or directed by the Engineer in accordance with these specifications.

Mixed concrete shall be placed as soon as possible after mixing and before initial set has occurred. In no case shall concrete be used which does not reach its final position in the forms within one (1) hour after the time that water is first added to the mix. If concrete which is mixed and then transported to the job is too stiff to be properly worked after it has been placed in its final position in the forms, the time between mixing and placing the concrete in the forms shall be reduced. The method and manner of placing concrete shall be such as to avoid the possibility of segregation or separation of the aggregates, or the displacement of the reinforcing steel.

All concrete shall be placed in continuous horizontal layers and so compacted that there will be no line of separation between succeeding batches or layers. Special care shall be taken to fill each part of the forms by depositing concrete directly as near the final position as possible, to work the coarse aggregates back from the face and to force the concrete under and around the reinforcing bars without displacing them, and to avoid sand and rock pockets. When necessary, openings shall be provided in the forms, or equivalent provided, to permit the placing and consolidation of concrete in such a manner as to avoid accumulation of spattered concrete from setting hard on the forms or reinforcing steel surfaces prior to their final contact with plastic concrete.

Dropping concrete more than five (5) feet, or in large quantities and running it down long inclined slopes in the forms will not be permitted.

107–3.08A Sequence of Placing

The sequence of placing shall be according to the placing diagram or notes, or as directed by the Engineer.

Copings of piers shall not be placed for at least twenty-four (24) hours after shafts and webs are placed.

Before concrete bridge floors are placed on steel spans the centering under the bridge shall be released and the span swung free on its supports.

Concrete in slabs and stems of T-beam or deck girder spans when stem of girder or beam is over 3′-0″in depth, shall be placed in separate operations, i.e., the beams or girders shall be first placed to the bottom of slab fillets. Sufficient time shall elapse between placing of beam or girder stems and deck slab to allow shrinkage to occur. This time shall, in general, be approximately 12 hours.

Suitable shear keys shall be provided in the top of beam or girder stems to secure a positive and mechanical bond between the stem and the slab. The size of these keys shall be shown on the plans. In general, suitable shear keys may be formed by the use of timber blocks 2″x8″ in cross section and having a length of 4″ less than the width of the stem. These keys shall be placed in the concrete along the top of beam or girder stems as required, but the spacing shall not be greater than 16″ center to center. The blocks shall be slightly beveled in such manner as to insure their ready removal. Shear keys shall be depressions in the concrete. Raised keys will not be allowed.

Concrete in slabs and stems of T-beam or deck girder spans, when the depth of stem is 3′-0″or less, may be placed in one continuous operation, subject to approval of the Engineer and providing that completion of placing and finishing of the deck slab will be done during daylight hours.

Concrete in cross beams, bulkhead walls, brackets, etc., shall be placed either with the girders or the slabs as indicated on the plans. Shear keys shall be provided at all construction joints, and where the size of keys is not shown on the plans they shall be approximately one-third of the area of the joint and not less than 1½ inches deep.

Shear keys shall be provided at all construction joints for piers, columns, walls, etc., whether or not they are shown on the plans. The area of the depressed part of the key shall be approximately one-third (1/3) of the area of the joint.

Roadway curb and sidewalk curb to bottom of rail web shall be placed with the sidewalk slab unless otherwise provided on the plans, or otherwise directed by the Engineer.

Rail posts, in general, shall be first placed and railing between posts then placed continuously. Stopping of the concreting operation at intermediate points between posts will not be allowed except when specifically shown on the plans. Whenever practicable, railing for the full length of one side of the roadway shall be placed in one operation.

The concrete in arch rings shall be placed in such a manner as to load the centering symmetrically and uniformly.

In filled spandrel arches, the arch ring shall be placed either by monolithic method, or in transverse sections. In long spans the Contractor may be required to load the crown in order to guard against unequal distortion of the forms during the process of placing. In placing the arch ring a key shall be cast, either inverted or outstanding, to take the shear of the spandrel walls. Shear steel may be substituted in place of keys, if approved by the Engineer, but the steel shall be furnished by the Contractor at his own expense and be placed in the manner and amount directed.

In open spandrel arches the arch ribs shall be placed in sections in accordance with the pouring diagrams, leaving small key sections between large sections to be filled after the shrinkage has taken place in the large sections.

All concrete shall be placed in the sequence given in the placing notes or diagram, and each numbered or lettered section shall require continuous placing until its completion.

Whenever concrete foundations for structures are being placed inside structure excavations, handicapped by water therein, they shall be dewatered before the structure concrete is placed. Where a water seal is necessary to permit dewatering the excavation satisfactorily, the seal shall be placed in accordance with Section 107–3.08C.

107–3.08B Placing Concrete in Cold Weather

Concrete for structures shall not be placed on frozen ground nor shall it be mixed or placed while the atmospheric temperature is below 35 degrees Fahrenheit, unless adequate means are employed to heat the aggregates and water and satisfactory provision has been made for protecting the work.

Concrete shall be effectively protected from cold temperatures for a period of five days after placing. In addition to heating the aggregates and water prior to mixing the concrete, it shall be the responsibility of the Contractor to provide suitable means for protecting the concrete for the five day curing period. The Contractor shall have the option of providing suitable means of heating the concrete in the forms, insulating the forms, or using such other methods or procedures as he may devise to portect the concrete from cold temperatures.

2. Approximate amount of air-entrained in a 6½ sack concrete mix per unit of additive added.
3. Recommended reduction in total mixing water in a 6½ sack concrete mix per unit of additive in terms of gallons of water per sack of cement or percentage of total mixing water.
4. Average compressive strength of concrete containing the additive at 7, 28 and 90 days compared to the same mix without the additive.
5. Volume of change of concrete containing the additive compared to the same mix without additive.
6. Effect on setting time of concrete per unit of additive with complete description of method used to determine setting time.
7. Effect of using the additive at twice and four times the recommended rate on setting time, air content, drying shrinking and compressive strength of the concrete.

When the Engineer requires that an additive be used, the Contractor will be reimbursed for the actual cost of the additive plus a sum equal to eighteen (18) per cent thereof in accordance with paragraph two, Section 9.04. The actual cost of the material plus eighteen (18) per cent shall be full compensation for all costs in connection with furnishing the additive and incorporating it in the concrete, as outlined herein.

For the purposes of providing a common porposal for all bidders, and for that purpose only, when additives are required, the Engineer will estimate the amount of force account for the item of work above described and will arbitrarily enter the amount in the bid proposal to become a part of the total bid by the Contractor.

107–3.03 STORAGE OF CONCRETE AGGREGATES

Except as may be provided in the special provisions of the proposal, or authorized by the Engineer, fine and coarse aggregates for concrete shall not be stored upon the work site.

107–3.04 STORAGE OF CEMENT

Portland cement shall be stored in such a manner as to permit of easy access for proper inspection and identification of each shipment. Bulk cement for City use shall not be stored in the same bin with cement which is to be used for other purposes. Cement shall be adequately protected from rain and dampness at all times. Any cement which in the opinion of the Engineer contains lumps that will not be pulverized in the mixer shall be rejeceted.

High-early-strength cement stored by the Contractor for a period longer than 30 days, or portland cement stored by the Contractor for a period longer than 60 days shall be held for re-test. If the cement has lost strength during the period of storage, as shown by tests of the Materials Laboratory, sufficient additional cement shall be added to the mix at the Contractor's expense to overcome such loss of strength, or the cement shall be rejected. The amount of cement to be added to the mix shall be determined by the Engineer and shall be final and binding upon the Contractor.

107–3.05 MEASURING MATERIALS

Cement shall be measured by the sack of ninety-four (94) pounds net. Unless specifically authorized by the Engineer in each case, batches of concrete shall be so adjusted that fractional sacks are not required. When permitted by the Engineer, the addition of fractional sacks shall be accomplished by actual weight. For this purpose the Contractor shall provide suitable scales and shall station a workman whose sole duty is to make such weights.

If cement is handled in bulk it shall be weighed on scales meeting the requirements of Section 21, Weighing Equipment.

Proportions of fine and coarse aggregates shall, unless otherwise provided in the special provisions, be measured by weight, making proper corrections for the free water held by the aggregates.

The weighing of the fine aggregate and each size of coarse aggregate shall each be a separate and distinct operation, the weight for the particular aggregates being proportional to their respective bulk specific gravities. The equipment for weighing aggregate shall comply with the requirements for weighing equipment in Section 21.

107–3.06 MIXING CONCRETE

107–3.06A Machine Mixing

Concrete shall be thoroughly mixed in a batch mixer of an approved size and type and one so designed as to positively insure a uniform distribution of the materials throughout the mass. Batches shall be proportioned on the basis of integral sacks of cement.

In general, all concrete shall be mixed for a period of not less than one (1) minute after all materials, including water, are in the mixer, except classes D and H concrete, which shall be mixed one and one-half (1½) minutes. Less mixing time may be allowed by the Engineer for special types of mixing equipment if tests indicate that equal or better results are obtainable.

During the period of mixing, the drum shall operate at the speed for which it has been designed. Such speed, however, preferably shall be not less than one hundred seventy-five (175), nor greater than two hundred twenty-five (225) feet per minute at the periphery of the drum, and not less than fourteen (14), nor more than twenty (20) revolutions per minute. The entire contents of the mixer shall be removed from the drum before materials for the succeeding batch are placed therein, and the mixer preferably shall be equipped with mechanical means for preventing the addition of aggregates after mixing has commenced.

The mixer shall be equipped with a water measuring device conforming to the requirements of Section 39–3.03C2 and preferably shall be equipped with a batch meter or other device for accurately recording the number of revolutions for each batch, and an attachment for automatically locking the charging device so as to prevent the emptying of the mixer until the materials have been mixed the minimum specified time. No mixer shall be operated above its rated capacity and no mixer shall be used which has a rated capacity of less than a two (2) sack batch.

The first batch of concrete materials placed in the mixer shall consist of a mixture of sand, cement and water sufficient to cover the inside surface of the mixing drum with a coating of cement mortar. Upon the cessation of mixing for any considerable length of time, the mixer shall be considered as incidental to the work and no compensation will be made for it.

107–3.06B Hand Mixing

Hand mixing will not be permitted, except in case of emergency and under written permission from the Engineer.

107–3.06C—Ready-mixed Concrete

Ready-mixed concrete may be used if approved by the Engineer. Approval will be given if investigation of the plant and delivery system indicates that concrete delivered to the site of the project will conform in all respects with the applicable requirements of Section 39–3.08 for ready-mixed concrete.

107–3.06D Retempering

Concrete shall be mixed only in such quantities as are required for immediate use, and shall be used while fresh before initial set has taken place. Any concrete in which initial set has begun shall be wasted and not used in the work. No retempering of concrete will be allowed.

107–3.07 CONSISTENCY

The quantity of mixing water to be used in each case shall be determined by the Engineer, and no changes shall be made without his consent. In general, a mixture shall be used which contains the minimum amount of water consistent with the required workability.

In Class D concrete, a wetter consistency will be required than with other classes of concrete. With this exception, the consistency of concrete mixtures shall be such that:

1. The mortar will cling to the coarse aggregate.
2. The concrete will not be sufficiently fluid to segregate when transported to the place of deposit.
3. The concrete, when dropped directly from the discharge chute of the mixer, will flatten out at the center of the pile but will stand up and not flow at the edges.
4. The mortar will show no free water when removed from the mixer.
5. The upper layer of the set concrete will show a cement film upon the surface but will be free from laitance.

107–3.08 PLACING CONCRETE

Concrete placing operations for concrete structures or parts thereof shall not be started by the Contractor without first obtaining approval from the Engineer, and the concrete placing shall proceed, after starting, continuously until the structure or portion of structure being placed has been completed between expansion joints, or construction joints, or such other limits as required and shown on the plans, or directed by the Engineer in accordance with these specifications.

Mixed concrete shall be placed as soon as possible after mixing and before initial set has occurred. In no case shall concrete be used which does not reach its final position in the forms within one (1) hour after the time that water is first added to the mix. If concrete which is mixed and then transported to the job is too stiff to be properly worked after it has been placed in its final position in the forms, the time between mixing and placing the concrete in the forms shall be reduced. The method and manner of placing concrete shall be such as to avoid the possibility of segregation or separation of the aggregates, or the displacement of the reinforcing steel.

All concrete shall be placed in continuous horizontal layers and so compacted that there will be no line of separation between succeeding batches or layers. Special care shall be taken to fill each part of the forms by depositing concrete directly as near the final position as possible, to work the coarse aggregates back from the face and to force the concrete under and around the reinforcing bars without displacing them, and to avoid sand and rock pockets. When necessary, openings shall be provided in the forms, or equivalent provided, to permit the placing and consolidation of concrete in such a manner as to avoid accumulation of spattered concrete from setting hard on the forms or reinforcing steel surfaces prior to their final contact with plastic concrete.

Dropping concrete more than five (5) feet, or in large quantities and running it down long inclined slopes in the forms will not be permitted.

107–3.08A Sequence of Placing

The sequence of placing shall be according to the placing diagram or notes, or as directed by the Engineer.

Copings of piers shall not be placed for at least twenty-four (24) hours after shafts and webs are placed.

Before concrete bridge floors are placed on steel spans the centering under the bridge shall be released and the span swung free on its supports.

Concrete in slabs and stems of T-beam or deck girder spans when stem of girder or beam is over 3′-0″in depth, shall be placed in separate operations, i.e., the beams or girders shall be first placed to the bottom of slab fillets. Sufficient time shall elapse between placing of beam or girder stems and deck slab to allow shrinkage to occur. This time shall, in general, be approximately 12 hours.

Suitable shear keys shall be provided in the top of beam or girder stems to secure a positive and mechanical bond between the stem and the slab. The size of these keys shall be shown on the plans. In general, suitable shear keys may be formed by the use of timber blocks 2″x8″ in cross section and having a length of 4″ less than the width of the stem. These keys shall be placed in the concrete along the top of beam or girder stems as required, but the spacing shall not be greater than 16″ center to center. The blocks shall be slightly beveled in such manner as to insure their ready removal. Shear keys shall be depressions in the concrete. Raised keys will not be allowed.

Concrete in slabs and stems of T-beam or deck girder spans, when the depth of stem is 3′-0″or less, may be placed in one continuous operation, subject to approval of the Engineer and providing that completion of placing and finishing of the deck slab will be done during daylight hours.

Concrete in cross beams, bulkhead walls, brackets, etc., shall be placed either with the girders or the slabs as indicated on the plans. Shear keys shall be provided at all construction joints, and where the size of keys is not shown on the plans they shall be approximately one-third of the area of the joint and not less than 1½ inches deep.

Shear keys shall be provided at all construction joints for piers, columns, walls, etc., whether or not they are shown on the plans. The area of the depressed part of the key shall be approximately one-third (1/3) of the area of the joint.

Roadway curb and sidewalk curb to bottom of rail web shall be placed with the sidewalk slab unless otherwise provided on the plans, or otherwise directed by the Engineer.

Rail posts, in general, shall be first placed and railing between posts then placed continuously. Stopping of the concreting operation at intermediate points between posts will not be allowed except when specifically shown on the plans. Whenever practicable, railing for the full length of one side of the roadway shall be placed in one operation.

The concrete in arch rings shall be placed in such a manner as to load the centering symmetrically and uniformly.

In filled spandrel arches, the arch ring shall be placed either by monolithic method, or in transverse sections. In long spans the Contractor may be required to load the crown in order to guard against unequal distortion of the forms during the process of placing. In placing the arch ring a key shall be cast, either inverted or outstanding, to take the shear of the spandrel walls. Shear steel may be substituted in place of keys, if approved by the Engineer, but the steel shall be furnished by the Contractor at his own expense and be placed in the manner and amount directed.

In open spandrel arches the arch ribs shall be placed in sections in accordance with the pouring diagrams, leaving small key sections between large sections to be filled after the shrinkage has taken place in the large sections.

All concrete shall be placed in the sequence given in the placing notes or diagram, and each numbered or lettered section shall require continuous placing until its completion.

Whenever concrete foundations for structures are being placed inside structure excavations, handicapped by water therein, they shall be dewatered before the structure concrete is placed. Where a water seal is necessary to permit dewatering the excavation satisfactorily, the seal shall be placed in accordance with Section 107–3.08C.

107–3.08B Placing Concrete in Cold Weather

Concrete for structures shall not be placed on frozen ground nor shall it be mixed or placed while the atmospheric temperature is below 35 degrees Fahrenheit, unless adequate means are employed to heat the aggregates and water and satisfactory provision has been made for protecting the work.

Concrete shall be effectively protected from cold temperatures for a period of five days after placing. In addition to heating the aggregates and water prior to mixing the concrete, it shall be the responsibility of the Contractor to provide suitable means for protecting the concrete for the five day curing period. The Contractor shall have the option of providing suitable means of heating the concrete in the forms, insulating the forms, or using such other methods or procedures as he may devise to portect the concrete from cold temperatures.

The Contractor assumes all risks connected with the placing of concrete during cold weather. Permission to place concrete during such cold weather period, given by the Engineer, will in no way assure acceptance of the work by the City. Should the concrete placed under such conditions prove unsatisfactory in any way, the Engineer shall still have the right to reject the work although the plan and the work was carried out with his permission.

107–3.08C Placing Concrete in Water

In no case shall concrete be placed in running water. Whenever permission is given to place concrete under water, it shall be so placed within the confines of a watertight compartment such as a cofferdam, tube or caisson.

Concrete placed under water shall be mixed with more water than is ordinarily permissible in order to make it more flowable, and shall be Class D or Class H mix. Concrete placed in still water inside an open crib or cofferdam shall be placed by means of a tremie, or closed bottom bump bucket. The width of section of footing being poured shall not exceed eighteen (18) feet for each tremie or bucket used.

When concrete is to be placed by a tremie, the methods of construction shall comply with the following requirements:

(a) All tremies shall consist of a tube having a diameter not less than ten (10) inches, and a hopper which will hold at least one (1) batch.

(b) A satisfactory method of expelling the water and first filling the tremie shall be used.

(c) The tremie tube shall be kept full to the top. In placing concrete through a tremie, two distinct handling devices shall be used; one to raise, lower and place the tremie, the other to deliver concrete to the tremie. When a batch is dumped into the hopper at the top, the tremie shall be raised slightly, but not out of the concrete at the bottom, until the batch discharges to the bottom of the hopper or the top of the tremie tube. The flow shall then be stopped by lowering the tremie.

(d) The seal shall be completed by placing full thickness as the seal advances from one end of the cofferdam to the other, keeping the finished surface of the concrete as nearly level as possible.

(e) The concrete shall be placed continuously until the required seal is placed.

Concrete shall not be placed in water with a bucket without the written approval of the Engineer.

When concrete is to be placed by means of a closed bottom dump bucket the method of construction shall comply with the following requirements:

(1) The bucket shall be full and completely closed before being lowered into the water.

(2) The bucket shall be lowered slowly through the water until it rests on the bottom.

(3) The bucket shall be raised very slowly during the discharge travel, the object being to keep the water as still as possible at the point of discharge and to agitate the mixture as little as possible.

In either method, if for any unavoidable reason it becomes necessary to discontinue the placing before the required seal is completed, the Contractor may be required to remove all concrete placed in the seal, at his own expense.

When concrete is to be placed under water, the Contractor may, if he elects, use methods whereby the aggregates are preplaced within the cofferdam before the introduction of the cement grout provided prior approval of the proposed method and procedure is obtained from the Engineer.

107–3.09 CONCRETE EXPOSED TO SEA WATER

Concrete structures so located as to be subject to the action of sea water shall be constructed to provide a maximum resistance to its disintegrating action.

Reinforcement bars shall be stored on the work in such manner as to avoid the formation of rust and shall be placed in the concrete in a clean and rust-free condition.

Sharp corners in concrete work exposed to sea water shall be avoided.

The concrete shall be mixed not less than two (2) minutes. The water content shall be carefully controlled and so regulated as to produce concrete of maximum impermeability. When placing the concrete it shall be thoroughly consolidated to the extent necessary to form a dense concrete having no coarse aggregate pockets at the surface when forms are removed. The original surface, as the concrete comes from the forms, shall be left undisturbed. In order to secure a thick and dense surface film, the form surfaces shall be heavily coated with shellac or any approved form oil.

The range of possible disintegration of the concrete from an elevation below that of extreme low tide to an elevation above that of extreme high tide shall be determined by the Engineer, and except with his special permission, no construction joints shall be located within this range. In the determination of this range due consideration shall be given to wave action and other conditions affecting the extreme limits of possible deterioration and disintegration.

Concrete in sea water within the range as above determined shall, in all cases, be deposited in the dry.

Forms shall not be removed for a period of thirty (30) days or longer if required by the Engineer, so that the sea water will not come in direct contact with the concrete.

When concrete piles are to be used in sea water, special care shall be exercised to avoid slight deformation cracks caused by handling. Concrete piles for use in sea water shall be cured for not less than thirty (30) days before being used.

107–3.10 CONCRETE EXPOSED TO ALKALINE SOILS OR WATER

In general, the same requirements as above specified for concrete in sea water shall govern the construction of concrete in alkaline soils or water.

Concrete shall not be allowed to come in direct contact with alkaline soil or water until it shall have been allowed to set at least thirty (30) days, and for a longer period if possible.

No construction joint shall be permitted below an elevation two (2) feet above the ground line. The surface cement film shall be left intact as it comes from the form. To secure a heavy and dense surface film the form surface shall be heavily coated with shellac or an approved form oil.

Concrete piles for use in alkaline soils, unless otherwise specified, shall be subject to the same requirements as are provided hereinabove for concrete piles in sea water.

107–3.11 VIBRATION OF CONCRETE

The Contractor shall provide suitable vibrating tampers for use in placing and compacting all concrete except that which is placed under water. The vibrators shall be of the type designed to be placed directly in the concrete and their frequency of vibration shall be not less than 4,500 impulses per minute when in actual operation. The type of vibrator and its method of use shall be subject to the approval of the Engineer.

In general, vibration required shall be limited to an amount necessary for a concrete that is uniformly plastic and dense and that is free of pools of grout as a result of excessive vibration. The Contractor shall provide any number of vibrators and operators necessary to obtain this result; and in additon, if required for satisfactory work, such hand tamping and spading with suitable tools as may be necessary.

107–3.12 FINISHING STRUCTURE, ROADWAY AND SIDEWALK SLABS

Surface finish of structure, roadway slabs shall be in accordance with these specifications to a Class ( ) A surface smoothness tolerance as described and defined in Section 39–3.15 for pavement concrete unless otherwise shown on the plans, or provided in the special provisions, or directed by the Engineer.

Concrete for roadway slabs shall not be placed until the Engineer is satisfied that the rate of producing and placing concrete will be sufficient to complete the proposed pour and the finishing operations within the scheduled time, that experienced concrete finishers will be employed to finish the deck, and that all necessary finishing tools and equipment are on hand at the site of the work and are in satisfactory condition for use.

Concrete shall be placed at such a time that finishing operations can be completed during daylight hours unless adequate lighting facilities are provided by the Contractor and the Engineer's approval is given.

High spots in the finished roadway slabs, not in conformance with a Class ( ) A surface finish, shall be corrected by grinding and scarifying. Low areas shall be corrected with an approved epoxy grout which shall not be higher than the surrounding finished deck surface and shall have dry portland cement applied to give it a concrete-like appearance.

Lowered or built up areas shall have substanitally the same surface texture as the rest of the deck.

Concrete for sidewalk slabs shall be well compacted to a dense concrete, leveled off to the required thickness and then finished to a surface having a granular texture that will not be slick when wet, i.e., Class 7 finish as specified in Section 107–3.17D. A suitable edging tool shall be used on all edges and all expansion joints.

107–3.13 CURING CONCRETE

All air exposed fresh finished concrete surfaces such as roadway and sidewalk slabs of structures shall be cured by one of the applicable methods described in Section 39–3.20 for cement concrete pavement, until the concrete has attained the design strength of Section 107–3.02A for the class of concrete, as determined by the Engineer; except that curing time shall not be less than seven (7) days for concrete made with portland cement. Curing shall start as soon as the fresh concrete has set to a degree that will allow application of the curing means without damage to the finished surface.

Curing of structure concrete surfaces protected from drying out by the forms will not be required provided the forms remain in place for the necessary time for the concrete to gain sufficient design strength. However, should it be necessary when wood forms are used, they shall be periodically wetted with water to prevent excessive drying out of the form.

All costs in connection with curing of concrete shall be included in the unit contract prices for concrete in place.

107–3.14 CONSTRUCTION JOINTS

Construction joints for structures shall be made only where shown on the plans. Approval by the Engineer must be obtained before making construction joints other than where shown on the plans. All construction joints shall be either horizontal or vertical, or if the main reinforcement is inclined, the joints shall be normal to the direction of the main reinforcement.

If the section is subject to shear, sufficient material as a key, or shear steel, or both, shall be provided to transmit the shear across the construction joint.

Before placing fresh concrete against existing concrete, any construction joints, the existing concrete face shall be thoroughly cleaned of all scum, laitance, honeycomb, localized high spots and the surface wetted with water.

All material and labor required for the construction of construction joints shall be included in the contract price per cubic yard for concrete in place.

107–3.15 EXPANSION JOINTS

Open expansion joints for bridge structures shall be constructed only where designated on the plans.

107–3.16 FINISHING FORM FINISHED CONCRETE SURFACES

Form finished surfaces of structure concrete shall, after the removal of forms, show a smooth dense concrete face containing only form markings. Any surface which does not show a dense concrete surface, is porous or otherwise defective, shall be corrected to the requirements of the plans by whatsoever means necessary, at the Contractor's expense. Concrete surfaces obtained with forms faced with oiled plywood panels, with proper control of concrete placement, its vibration and spading, etc., will result in a satisfactory concrete surface requiring treatment initially to remove form joint fin markings from the concrete surface. All form finished concrete surfaces shall be finished in accordance with one of the classes of finish as described hereinafter and, unless otherwise shown on the plans or outlined in the special provisions, or directed by the Engineer, the class of finish to be had for various surfaces of structure concrete shall be as follows:

107–3.16A Class 1 Surface Finish

Class 1 surface finish shall be applied to all formed surfaces of structures prominently exposed to the public inspection for which accurate alignment and evenness of the formed surfaces are of paramount importance for appearance. Class 1 finish shall be essentially the same finish obtained as outlined hereinafter for a Class 2 surface finish except that the surface smoothness tolerance shall be not more than one-eighth (⅛) inch, when tested for smoothness with a ten (10) foot straightedge or equivalent thereof for curved surfaces.

107–3.16B Class 2 Surface Finish

Class 2 surface finish, except as otherwise provided herein, shall be applied to all formed surfaces of structures that are exposed to public view. For this class of finish, the surface smoothness tolerance of the finished surface shall be such as to have no abrupt irregularities that exceed one-fourth (¼) inch when tested with a ten (10) foot straightedge or an equivalent template for curved surfaces.

After removal of forms to obtain a Class 2 surface, all lips and edgings where form boards have met shall be removed with a sharp tool or stone. Bolts shall be removed and the holes filled with 1:2 mortar and floated to an even and uniform surface. The surface of the concrete shall then be thoroughly washed with water and a 1:1 mortar applied with brushes and well worked into the small air holes and other crevices in the face of the concrete. As soon as the mortar has taken its initial set it shall be rubbed off, using a sack or piece of carpet for that purpose. The mortar paint shall not be allowed to take its final set before being rubbed off.

Only that amount of surface that can be finished during one day shall be painted. Mortar allowed to set too hard to be rubbed off as above described, shall be removed with a carborundum stone and water. As soon as the mortar paint has set sufficiently hard, water shall be sprayed over the finished surface as a curing agent and the surface shall be kept damp for not less than two days.

The use of stones to rub all of the surfaces, thereby breaking the protective film on the face of the concrete, will not be allowed. The same brand of cement shall be used for finishing as was used in the concrete. The work shall be performed to the satisfaction of the Engineer.

Class 2 finish in general, shall be obtained for the following surfaces:

(1) All outside exposed structure surfaces above finished ground lines except floor and deck slabs for bridge, grade separation and underpass structures.

(2) All exposed to view by the public, inside and outside concrete surfaces of underground or above ground structures constructed for sewer and water pumping stations; treatment plant works, reservoirs, power substations and dams.

107–3.16C Class 3 Surface Finish

Class 3 surface finish applies to all formed surfaces upon or against which backfill or concrete will be placed, or will not be exposed to public inspection. The finish, in addition to the removal and repair of defective concrete as outlined, and specified curing, will require correction of surface irregularities which, when measured as de-

scribed for Class 1 and Class 2 surfaces, exceed one-half (½) inch.

Class 3 surface finish shall be applied to the following surfaces:

(1) The under surfaces of floor and roof slab spans not critical as to appearance.

(2) The inside surfaces of structures such as underround pumping plant for sewer works that are entered through a small circular manhole opening not larger than three (3) feet in diameter.

(3) Surfaces which will be buried underground or covered with fill.

(4) Upstream surfaces of dams which will be under water.

107–3.17 FINISHES FOR FLOOR SLABS AND SIDEWALK SLABS

The finished surface of floor slabs for structures shall be one of the following finishes as shown on the plans. Sidewalk slabs shall be finished to a Class 7 finish unless otherwise shown on the plans, in the special provisions or directed by the Engineer.

107–3.17A Class 4—Float Floor Finish

After the concrete for a floor slab has been placed and consolidated to the required thickness, it shall be finished with a situable wood float so as to produce a uniform, fine textured surface having an overall smoothness tolerance that does not exceed one-eighth (⅛) inch when tested with the standard ten (10) foot straightedge in any direction at overlapping intervals.

107–3.17B Class 5—Sweat Floor Finish

After the floor has received a Class 4 finish, it shall be given sufficient time to set up so that a steel trowel can be used. The surface then shall be trowelled one or more times until the surface layer of the setting concrete has a dense surface even in texture and free of any irregularities. The surface when stroked with the steel trowel shall have a sweat appearance effect.

107–3.17C Class 6—Hard Trowel Floor Finish

This finish is in addition to a Class 5 finish. After the sweat effect has been attained, continued steel troweling shall continue until a hard, dense, polished effect is achieved and no trowel marks are in evidence.

107–3.17D Class 7—Sidewalk Slab Finish

Finish for sidewalk slabs shall be similar to Class 4, except that at the proper time the surface shall be steel troweled to produce a dense surface. The surface shall then be broomed to produce a suitable non-skid texture as directed by the Engineer. Before brooming, all joints and edges shall be neatly tooled with the proper shape and type of trowel.

107–4 MEASUREMENT

All concrete, except in railings, shall be measured by the cubic yard in place for the various classes of concrete. Measurements shall be to the neat lines of the structure as shown on the plans or as authorized in writing by the Engineer, except in the case of concrete in cofferdam seals. Class D and Class H concrete, when used in the seals of underwater cofferdams, will be paid for on the basis of the actual volume deposited as determined by the average cross sectional area of the inside of the cofferdam except that no payment will be made for concrete outside of an area which is bounded by vertical planes one foot outside of the neat lines of the seal, as shown on the plans, and parallel thereto.

No payment will be made for concrete below the established elevation of the bottom of the footing or seal, and no deduction will be made for pile heads, reinforcing steel, structural steel or bolts.

107–5 PAYMENT

All concrete, except in railings, will be paid for at the contract price per cubic yard in place for the various classes of concrete.

The concrete price shall be full compensation for furnishing all materials, equipment, tools, falsework, forms, expansion joint material, labor and all items required to complete the concrete work. Unless otherwise provided, the contract price shall include the furnishing and placing of scuppers and drains.

The cost of furnishing all materials, equipment and labor necessary in the preparation of the solution of an air-entraining agent and its addition to each batch of concrete shall be considered as incidental to the construction and shall be included in the unit contract prices per cubic yard for the various classes of concrete and the unit contract price per linear foot for "Reinforced Concrete Bridge Railing."

If, at any time, the Contractor is ordered by the Engineer to furnish concrete requiring the use of high-early-strength cement, payment will be made at the unit contract price for the particular class of concrete involved, based on the use of portland cement, plus an allowance consisting of the differential between the price of high-early-strength cement and portland cement, as expressed by the contract price per barrel for "Extra for Furnishing High-early-strength Cement," for the quantity of high-early-strength cement so used. If no such price is included in the schedule of contract unit prices, payment for concrete mixed with high-early-strength cement will be made at the unit contract price for the particular class of concrete involved plus an extra allowance agreed upon in writing.

Section 108—(Spare)

Section 109—(Spare)

Section 110—(Spare)

Section 111—Reinforcing Steel

111–1 DESCRIPTION

Concrete reinforcement shall consist of round or square deformed bars or wire mesh. Square twisted bars shall not be used.

111–2 MATERIALS

111–2.01 DEFORMED STEEL BARS

Deformed steel bars for concrete reinforcement shall conform to the requirements of ASTM Designation A 15, Billet Steel Bars for Concrete Reinforcement, Intermediate grade, ASTM Designation A 432, or ASTM Designation A 431, High Strength Billet Steel Bars for Concrete Reinforcement as noted on the plans, except that the bars shall be made only by the open-hearth process or the electric furnace process. The form of the deformed bars shall conform to ASTM Designation A 305, Minimum Requirements for Deformations of Deformed Steel Bars for Concrete Reinforcement. Deformed bars Nos. 14 and 18 for concrete reinforcement shall conform to the requirements of ASTM Designation A 408, Special Large Size Deformed Billet Steel Bars for Concrete Reinforcement.

111–2.02 WIRE MESH

Wire mesh for concrete reinforcement shall conform to the requirements of the standard specifications for Welded Steel Wire Fabric for Concrete Reinforcement, ASTM Designation A 185. All wire mesh shall be of an approved kind and quality of manufacture.

111–2.03 COLD DRAWN WIRE

Cold drawn wire shall conform to the requirements of ASTM Designation A 82, Cold-Drawn Steel Wire for Concrete Reinforcement.

111–3 CONSTRUCTION DETAILS

111–3.01 ORDERING

In general, a bar list and bending diagram will be included in the plans but the Contractor shall use them at his own risk and should check his order from the plans.

111–3.02 INSPECTION

111–3.02A Notice of Rolling

The Contractor shall give ample notice to the Engineer of the beginning of work at the mill in order that mill inspection may be provided. No material shall be rolled or fabricated before the Engineer has been notified with whom the orders have been placed and where the material will be rolled.

111–3.02B Facilities for Inspection

The Contractor shall furnish all facilities for the inspection of material and workmanship in the mill, and inspectors shall be allowed free access to the necessary parts of the premises.

111–3.02C Inspector's Authority

The Inspector shall have the authority to reject materials or workmanship which do not fulfill the requirements of these specifications, but in cases of dispute the Contractor may appeal to the Engineer, whose decision shall be final.

111–3.02D Rejections

The acceptance at the mill of any material by the Engineer's representative shall not be construed to bar its subsequent rejection, if found defective. Rejected materials and workmanship shall be replaced promptly or be made good by the Contractor.

111–3.03 BENDING

Steel reinforcing bars shall be cut and bent by careful and competent workmen. They shall be bent cold to templates, which shall not vary appreciably from the shape and dimesion shown on the plans. All sharp bends shall be avoided, and in no case shall a bend be of less radius than three (3) diameters of the bar.

In forming hooks on the ends of bars, the bend shall have a radius of at least three (3) diameters of the bar and shall extend at least six (6) diameters beyond the bend.

111–3.04 PROTECTION OF MATERIALS

Reinforcing steel shall be protected at all times from injury and, when placed in the structure, shall be free from dirt, loose mill scale and rust scale, paint, oil or other foreign substance.

111–3.05 PLACING AND FASTENING

Reinforcing steel shall be placed in the exact positions shown on the plans and held securely during the pouring of the concrete. In general, all reinforcement shall be put in proper position, then be securely wired and blocked before concrete is poured in any section. All abrupt bends shall be avoided except where one steel member is bent around another. Vertical stirrups shall always pass around the main tension members or be securely attached thereto.

All reinforcing steel shall be securely blocked from the forms by means of small mortar blocks not more than one and one-half (1½) inches square, or by other approved devices. The blocks shall be constructed of mortar mixed with the same proportions of sand and cement used in Class A concrete. If metal chair supports are used as supports for steel reinforcing bars, they shall be hot-dipped galvanized for all surfaces not covered by at least ½-inch of concrete.

Reinforcing steel which interferes with bridge drains shall be bent in the field as may be required to clear the drains.

The minimum clear space in inches between reinforcing bars shall be as follows:

Between adjacent bars in a layer	2½"
Between adjacent layers	2"

Except as otherwise shown on the plans, the thickness of concrete cover over reinforcing bars shall be as follows:

Between main bars and surface of concrete (except in slabs and walls)	2"
Between main bars and surface of concrete in retaining walls	1½"
Between main bars and surface of concrete deposited against earth (without intervening forms)	2½"
Between slab bars and bottom of slab	1"
Between slab bars and top of slab	1½"
Between stirrups and ties and surface of concrete	1"

In concrete masonry exposed to the action of salt air or alkaline water, the minimum cover over main reinforcing bars shall be three (3) inches, unless otherwise shown on the plans.

Before any concrete is placed, all mortar shall be cleaned from the reinforcement.

In the construction of roadway and sidewalk slabs, special attention shall be given to the placing of reinforcing steel to insure that proper cover and wearing surface is provided.

No concrete shall be deposited until the Engineer has inspected the placing of the reinforcing steel and has given permission to pour concrete. All concrete placed in violation of this provision shall be rejected and removed.

111–3.06 SPLICING

111–3.06A Steel Bars

All steel bars for concrete reinforcement shall be furnished in the full lengths indicated upon the plans. No splicing of bars, except where shown on the plans, will be permitted without the written approval of the Engineer.

Splices which are permitted shall have lengths each not less than thirty-five (35) times the nominal diameter of the reinforcement unless otherwise specified on the plans, and shall be well distributed or else located at points of low tensile stress.

No splices will be permitted at points where the section is not sufficient to provide a minimum distance of two (2) inches between the splice and the nearest adjacent bar or the surface of the concrete. The bars shall be rigidly clamped or wired at all splices in a manner approved by the Engineer.

111–3.06B Wire Mesh

Sheets of wire mesh reinforcement shall overlap each other sufficiently to maintain a uniform strength and shall be securely fastened at the ends and edges.

111–3.06C Butt Welding Reinforcing Steel

Where shown on the plans butt welding of the reinforcing bars shall be accomplished by the shielded metal arc process and by the direct butt method using low-hydrogen electrodes.

Steel suitable for welding shall be furnished for bars which are to be welded. In steel which is to be welded, the carbon shall not exceed 0.40 per cent and the manganese shall not exceed 1.30 per cent.

The coatings of the low-hydrogen type electrodes shall be in satisfactory condition at the time of use in accordance with the requirements outlined in Section 112.

Welds shall be made by qualified operators, certified for work under the City of Seattle Building Code or according to the standard procedure of the American Welding Society. Welders having certificates shall have been prequalified within twelve (12) months previous to

beginning work on the subject structure. Preparation for welding and welding procedure shall be in accordance with good practice and with the current "Standard Specifications for Welded Highway and Railway Bridges of the American Welding Society." Butt welding shall be done in accordance with "Recommended Practice for Welding Reinforcing Steel, Metal Inserts, and Connections in Reinforced Concrete," of the American Welding Society.

All costs in connection with butt welding the reinforcing steel as detailed on the plans and in accordance with these specifications shall be included in the unit contract price per pound for "Steel Reinforcing Bars."

111–4 MEASUREMENT

All reinforcing steel will be measured by the computed weight of all metal actually in place as shown on the plans or as ordered by the Engineer. No allowance will be made for spreaders, form blocks, wire clips or other fastenings, which must be furnished by the Contractor. When splices are made other than those shown on the plans, no allowance will be made for the extra steel required. When shear steel is required at construction joints which are not shown on the plans, and which are permitted for the Contractor's convenience, no allowance will be made for the additional steel required.

For the purpose of computing weights of reinforcing steel, the following table shall be used:

BAR REINFORCING STEEL

Deformed Bar Designation Number	Nominal Diameter Inches	Unit Weight, Pounds per Foot
3	0.375	0.376
4	0.500	0.668
5	0.625	1.043
6	0.750	1,502
7	0.875	2.044
8	1.000	2.670
9	1.128	3.400
10	1.270	4.303
11	1.410	5.313
14	1.690	7.650
18	2.260	13.600

111–5 PAYMENT

Payment for reinforcing steel will be made at the unit contract price per pound for "Steel Reinforcing Bars," and payment for wire mesh will be at the unit contract price per square yard for "Wire Mesh.....Gage.....Inch Mesh."

Payment for reinforcing steel shall include the cost of furnishing, fabricating and placing the reinforcement. In structures of reinforced concrete where there are no structural steel bid items, such minor metal parts as expansion joints and bolts will be paid for at the unit contract price for reinforcing steel unless otherwise specified.

Section 112—Structural Steel

112–1 DESCRIPTION

Structural steel shall be of two classes: Structural Carbon Steel and Structural Low Alloy Steel. Those parts which are fabricated of structural low alloy steel will be designated on the plans by the symbol "A". All structural parts not so designated shall be fabricated of structural carbon steel.

All parts constructed of rolled steel plates or shapes which can be fabricated by the common structural shop methods shall be considered for the purpose of payment as structural steel of the class to which they belong. All shims, ladders, stairways, anchor bolts and sleeves, and also all pipe, fittings and fastenings that are used in handrails on structures shall be classified as Structural Carbon Steel unless otherwise noted on the plans or in the special provisions.

Other metal parts for which payment is not otherwise provided, even though they be made of other materials, shall be classified as Structural Carbon Steel.

112–2 MATERIALS

112–2.01 STRUCTURAL CARBON STEEL

Structural carbon steel shall conform to the requirements of ASTM Designation A 7, Steel for Bridges and Buildings, ASTM Designation A 36 Structural Steel, or ASTM Designation A 373 Structural Steel for Welding. The various classes of steel shall be marked at the mill to distinguish them and the fabricator shall keep the various classes of material carefully separated.

112–2.02 STRUCTURAL LOW ALLOY STEEL

Structural low alloy steel shall conform to both the chemical and physical requirements of ASTM Designation A 242, High Strength Low Alloy Structural Steel, ASTM Designation A 440, High Strength Structural Steel, or ASTM Designation A 441, High Strength Low Alloy Structural Managanese Vanadium Steel. The various classes of steel shall be marked at the mill to distinguish them and the fabricator shall keep the various classes of material carefully separated.

112–2.03 STRUCTURAL RIVET STEEL

Structural rivet steel shall conform to the requirements of the standard specifications for Structural Rivet Steel, ASTM Designation A 141.

112–2.04 RIVET BOLTS

Rivet bolts shall be manufactured from steel containing 0.18% to 0.24% carbon, and 0.75% to 1.00% manganese, and having a minimum tensile strength of 70,000 pounds per square inch.

112–2.05 BOLTS

112–2.05A Unfinished Bolts

Unfinished bolts, (ordinary machine bolts), shall conform to the specification requirements of ASTM Designation A 307, Steel Machine Bolts and Nuts and Tap Bolts. They shall be Grade A unless otherwise specified on the plans or in the special provisions.

112–2.05B Turned Bolts

Turned bolts or other special bolts shall be made from structural carbon steel as defined in Section 112–2.01, unless otherwise specified on the plans.

112–3 CONSTRUCTION DETAILS

112–3.01 MILL AND SHOP INSPECTION

112–3.01A Notice of Rolling

The Contractor shall give ample notice to the Engineer of the beginning of work at the mill and shop, so that inspection may be provided. No material shall be rolled or fabricated before the Engineer has been notified with whom the orders have been placed and where the material will be rolled.

112–3.01B Facilities for Inspection

The Contractor shall furnish all facilities for the inspection of material and workmanship in the mill and shop, and inspectors shall be allowed free access to the necessary parts of the premises.

112–3.01C Inspector's Authority

The Inspector shall have the authority to reject materials or workmanship which do not fulfill the requirements of these specifications, but in cases of dispute the Contractor may appeal to the Engineer, whose decision shall be final.

Inspection at the mill and shop is intended as a means of facilitating the work and avoiding errors, and it is expressly understood that it will not relieve the Contractor from any responsibility in regard to defective material or workmanship and the necessity for replacing the same.

The inspector shall stamp each individual piece as it is accepted with a private mark, which shall be registered with the City. This mark shall be in plain view and cut into the steel. Any piece not so marked will be rejected.

112–3.01D Rejections

The acceptance of any material or finished members by the Inspector shall not be a bar to their subsequent rejection, if found defective. Rejected materials and workmanship shall be replaced promptly or be made good by the Contractor.

112–3.02 FIELD INSPECTION

The erection of structural steel shall be subject to the inspection of the Engineer. He shall be given free access to the site of the project, and the Contractor shall cooperate with the Engineer in making possible a thorough examination of the field work while it is in progress.

Material and fabrication not previously inspected will be inspected after delivery of the fabricated material to the site of the work.

112–3.03 MILL ORDERS AND SHIPPING STATEMENTS

The Contractor shall furnish the Engineer with as many copies of mill orders and shipping statements as the Engineer may direct.

112–3.04 WEIGHING

Structural steel need not be weighed unless specified on the plans or in the special provisions.

In the event the weight of structural steel is required, the weight may be either calculated or obtained by scales and as many copies of the calculations or weight slips shall be furnished as specified or directed by the Engineer.

If scale weights are furnished, the weights of all tools, erection material and dunnage shall be kept separate.

112–3.05 LOADING AND UNLOADING

The loading, transporting, unloading and piling of the structural material shall be so conducted that the metal will be kept clean and free from injury from rough handling.

112–3.06 SHOP PLANS

The Contractor will be required to submit to the Engineer for approval, all shop detail plans required for fabrication of the steel.

Two sets of prints shall first be submitted to the Engineer for checking, except that for grade separation structures which carry a railroad over the highway, five (5) sets of prints shall be submitted. Only drawings which have been checked by the Contractor or his agent will be accepted. One set of prints of the shop plans will be returned to the Contractor, either without change or with corrections marked thereon. After the required revisions have been made by the Contractor, additional sets of prints from five to thirteen in number, as requested, shall be furnished to the Engineer for final approval. No material shall be fabricated until the plans have been given final approval by the Engineer.

The approval of shop plans shall be understood to be an acceptance of the character and sufficiency of the details, and not a check of the dimensions.

No changes shall be made in any drawing after it has been approved except by the consent or direction of the Engineer in writing.

Prior to the completion of the project, the Contractor or his agent, shall furnish the original cloth tracings, or acceptable reproductions on cloth of the original drawings of the shop plans, to the Engineer. All drawings shall be on sheets each twenty-two (22) inches wide by thirty-six (36) inches long in overall dimensions or on smaller sheets that are multiples of eight and one-half (8½) inches by eleven (11) inches.

112–3.07 SUBSTITUTIONS

Substitutions of sections having different dimensions than those shown on the plans shall be made only when approved in writing by the Engineer. Should the substitution of heavier members be allowed upon the Contractor's request, no extra weight over the original design section will be allowed.

112–3.08 SHOP STORAGE OF MATERIALS

All material stored at a steel fabrication plant shall be stored in such manner to prevent distortion, or damages from rusting. Material which shows any signs of pitting due to rust will not be accepted.

All fabricated material stored prior to shipment shall be subject to the same requirements of storage as the unfabricated material.

All structural steel shall be delivered to the job in good condition. Steel transported by salt water and which, in the opinion of the Engineer, has been damaged by salt water, shall be sandblasted and repainted with the shop coat specified on the plans after it has been unloaded from the ship.

Structural low alloy steel shall be marked at the mill to distinguish it from structural carbon steel, and the fabricator shall keep the two classes of material carefully separated.

112–3.09 STRAIGHTENING MATERIAL

All deformed structural material shall be properly straightened by methods which are non-injurious prior to being laid out, punched or otherwise worked in the shop. Sharp kinks and bends shall be cause for rejection.

112–3.10 WORKMANSHIP AND FINISH

The workmanship and finish shall be first class and equal to the best practice in modern structural steel fabricating shops or plants. Welding, shearing, burning and chipping shall be neatly and accurately done and all portions of the work exposed to view shall be neatly finished.

112–3.11 RIVET HOLES

112–3.11A General Requirements

All stringers and floor beam connections, connections of main members, and any other members indicated on the plans, shall have sub-punched and reamed rivet holes, or shall be drilled from the solid. It shall be understood that this requirement does not apply to rivet holes in lateral bracing, portals, sway bracing and other secondary members, nor to their connections to the main members.

For holes where reaming is not required, material three-fourths (¾) inch or less in thickness may be punched full size. All holes in steel more than three-fourths (¾) inch in thickness shall be sub-punched and reamed, or drilled from the solid.

112–3.11B Punched Holes

Full size punched holes shall be one-sixteenth ($\frac{1}{16}$) inch larger than the nominal diameter of the rivet. The diameter of the die shall not exceed the diameter of the punch by more than three-thirty-seconds ($\frac{3}{32}$) inch. If holes must be enlarged to admit the rivets, they shall be reamed.

The punching of holes shall be so accurately done that, after assembling the component parts of a member, a cylindrical pin one-eighth (⅛) inch smaller than the nominal diameter of the punched hole may be passed through at least 75 of any group of 100 contiguous holes in the same surface, or in like proportion for any group of holes. If this requirement is not fulfilled, the badly punched pieces shall be rejected. If any holes will not pass a pin three-sixteenths ($\frac{3}{16}$) inch smaller than the nominal diameter of the punched hole, it shall be cause for rejection.

112–3.11C Drilled Holes

Drilled holes shall be one-sixteenth ($\frac{1}{16}$) inch larger than the nominal diameter of the rivet. Burrs an the outside surfaces shall be removed with a tool producing a one-sixteenth ($\frac{1}{16}$) inch fillet around the edge of the hole.

112–3.11D Sub-punched and Reamed Holes

Sub-punched and reamed holes for rivets having diameters greater than three-fourths (¾) inch shall be punched three-sixteenths ($\frac{3}{16}$) inch less than the nominal diameter of the rivet, and for rivets having diameter three-fourths (¾) inch or less, the holes shall be punched one-sixteenth ($\frac{1}{16}$) inch less than the nominal diameter of the rivet. The punch and die shall have the same relative sizes as specified for full size punched holes. After punching, the holes shall be reamed to a diameter one-sixteenth ($\frac{1}{16}$) inch larger than the nominal diameter of the rivet.

112–3.11E Reaming

Reaming of rivet holes shall be done with twist drills or short taper reamers. Reamers preferably shall not be directed by hand. No oil or grease shall be used as a lubricant.

Burrs resulting from reaming shall be removed with a tool producing a one-sixteenth ($\frac{1}{16}$) inch fillet around the edge of the holes.

Reaming of the holes in a built member shall be done only after its component parts are assembled and firmly bolted together, and no interchange of reamed parts will be permitted. Holes through assembled material shall not consist of both sub-punched or sub-drilled holes, and holes punched or drilled full size.

Holes for field connections in main truss members shall be reamed with the entire truss assembled.

All stringer and floor beam connections shall be reamed to a steel template not less than one (1) inch thick.

112–3.11F Accuracy of Reamed and Drilled Holes

Reamed or drilled holes shall be cylindrical and perpendicular to the member and their accuracy shall be the same as specified for punched holes except that, after reaming or drilling, 85 of any group of 100 contiguous holes in the same surface, or in like proportion for any group of holes, shall not show an offset greater than one-thirty-second ($\frac{1}{32}$) inch between adjacent thickness of metal.

112–3.11G Drifting of Holes

The drifting done during assembling shall be only such as to bring the parts into position, and not sufficient to enlarge the holes or distort the metal.

112–3.12 SHOP ASSEMBLING

Surfaces of metals that will be in contact when shop assembled shall not be painted. These surfaces shall be thoroughly cleaned of rust, loose mill scale, dirt, oil or grease and all other foreign substances.

The component parts of built members shall be assembled, drift pinned to prevent lateral movement, and firmly bolted to draw the parts into close contact before reaming, drilling or riveting is begun. At least 25% of the holes shall be bolted up and the Engineer may require as much as 50%. Assembled parts shall be taken apart if necessary for the removal of burrs and shavings produced by the reaming operation.

The member shall be free from twists, bends or other deformations.

Preparatory to shop riveting where the rivet holes are punched full size, they shall be cleared for the admission of the rivets by reaming.

End connection angles, stiffener angles, etc., shall be carefully adjusted to correct locations and rigidly bolted, clamped or otherwise firmly held in place until riveted.

After the built-up members have been riveted, the entire truss or girder shall be fully assembled, properly aligned and set to camber, pinned and bolted together before drilling or reaming the holes in the field connections.

112–3.13 MATCH MARKING

Connecting parts assembled in the shop for the purpose of reaming or drilling holes in field connections shall be match-marked, and a diagram showing such marks shall be furnished to the Engineer.

112–3.14 SAND-BLASTING

After shop fabrication of structural steel and before the first or shop coat of paint is applied, the steel shall be cleaned for painting by sand-blasting as defined by Steel Structure Painting Council Surface Preparation Specifications, Specification No. 5 Blast Cleaning to "White" Metal, unless otherwise specified in the contract special provisions. "White" Metal is defined to mean a surface with a gray white uniform metallic color, slightly roughened to form a suitable anchor pattern for paint coatings. The surface, when viewed without magnification, shall be found free of visible mill scale, rust, corrosion, oxides, paint or other foreign matter.

112–3.15 PAINTING

After being thoroughly cleaned by sand-blasting as specified above, all structural steel shall be painted within eight (8) hours of sand-blasting with one shop coat of the paint specified on the plans. The paint and its manner of application shall be as specified in Section 116–3.01, in a location sufficiently removed from the cleaning operations to avoid contamination of the cleaned steel surface or the fresh paint by the cleaning operations.

112–3.16 RIVETS

The diameter of rivets indicated upon the plans shall be understood to mean their diameter before heating.

Heads of driven rivets shall be of approved shape, concentric with the shanks, true to size, full, neatly formed, free from fins and in full contact with the surface of the member.

Field rivets, for each size and length, shall be supplied in excess of the actual number to be driven to provide for losses due to misuse, improper driving or other contingencies. Rivets shall be free from furnace scale on their shanks and from fins on the under side of the machine-formed heads.

112–3.17 BOLTS AND BOLTED CONNECTIONS

Where bolted connections are shown on the plans or specifically authorized, all bolts, nuts and washers shall conform to the specifications for the assembly of strucural joints using high-strength steel bolt, as approved by the Research Council on Riveted and Bolted Structural Joints of the Engineering Foundation, February, 1954. Contact surfaces shall fit solidly together and the contact surfaces of the joint shall be free of dirt, scale, paint or lacquer and other deposits that would prevent a solid setting of the parts.

When bolted joints are used, all mill scale and rust shall be removed from the contact surfaces by sand-blasting immediately prior to erection.

112–3.18 RIVET BOLTS

Rivet bolts shall be used only where specified on the plans or ordered by the Engineer in writing. The design of shank, nut and thread shall be subject to the approval of the Engineer and the holes in which they are placed shall meet the requirements of Section 112–3.11.

No additional payment will be made for rivet bolts used in place of rivets.

112–3.19 RIVETING

Rivets shall be heated uniformly to a light cherry red color and shall be driven while hot. The heating of the points of rivets more than the remainder will not be permitted. When ready for driving they shall be free from slag, scale and other adhering matter and when driven they shall completely fill the holes. Burned, burred or otherwise defective rivets, or rivets which throw off sparks when taken from the furnace or forge shall not be driven.

Loose, burned, badly formed or otherwise defective rivets shall be cut out. Caulking and re-cupping of rivet heads will not be allowed. In cutting out defective rivets care shall be taken not to injure the adjacent metal and, if necessary, the rivet shanks shall be removed by drilling.

Countersinking shall be neatly done and countersunk rivets shall completely fill the holes.

Shop rivets shall be driven by direct acting riveters where practicable. The riveting machines shall retain the pressure for a short time after the upsetting is complete.

Pneumatic hammers shall be used for field riveting.

112–3.20 EDGE FINISHING

Sheared edges of material more than five-eighths (⅝) inch in thickness shall be planed to a depth of not less than one-eighth (⅛) inch when so required by the Engineer. All sheared and flame-cut edges shall be true to line and shall be free from rough corners or projections. When required by the Engineer, they shall be ground to remove the objectionable defects. Re-entrant cuts shall be filleted as large as practical but never less than one (1) inch radius. Gusset plates with curved edges shall be cut to the exact radius shown on the plans and shall be ground to remove any rough corners.

112–3.21 PLANING BEARING SURFACES

Ends of columns taking bearing upon base and cap plates shall be milled to true surfaces and correct bevels after the main section of these members and the end connection angles have been fully riveted.

Caps and base plates of columns and the sole plates of girders and trusses shall have full contact when assembled. The plates, if warped or deformed, shall be hot-straightened, planed or otherwise treated to secure an accurate, uniform contact. After being riveted in place the excess metal of countersunk rivet heads shall be chipped smooth and flush with the surrounding metal and the surfaces which are to come in contact with other metal surfaces shall be planed and milled if necessary, to secure proper contact. Correspondingly, the surfaces of base and sole plates which are to come in contact with masonry shall be rough finished, if not free from warps or other deformations.

In planing the surfaces of expansion bearings the cut of the tool shall be in the direction of expansion.

112–3.22 ABUTTING JOINTS

Abutting ends of compression members shall be accurately faced to secure an even bearing when assembled in the structure. Facing or milling of the ends of built-up members shall be done after they have been riveted.

Ends of tension members at splices shall be rough finished to secure close and neat but not necessarily contact fitting joints.

112–3.23 END CONNECTION ANGLES

End connection angles of floor beams and stringers shall be flush with each other and accurately set as to position and length of member. In general, end connection angles shall not be finished unless required by the Engineer. However, faulty assembling and riveting may be cause for requiring them to be milled, in which case their thickness shall be reduced not to exceed one-sixteenth ($\frac{1}{16}$) inch, nor shall their rivet bearing value be reduced below design requirements.

112–3.24 BUILT MEMBERS

The several pieces forming one built member shall be straight and close fitting. Such members shall be true to detailed dimensions and free from twists, bends, open joints or other defects resulting from faulty fabrication and workmanship.

112–3.25 HAND HOLES

Hand holes may be either punched or cut with burning torches. In either case they shall be true to the size and shape shown on the plans. Edges shall be true to line and shall be ground smooth.

112–3.26 LACING BARS

The ends of lacing bars shall be neatly rounded unless otherwise specified.

112–3.27 PLATE GIRDERS

112–3.27A Web Plates

Web plates of girders having no cover plates may be detailed with the top edge of the web flush with the backs of the flange angles. Any portion of the plate projecting beyond the angles shall be chipped flush with the backs of the angles. Web plates of girders having cover plates may be one-half (½) inch less in width than the distance back to back of flange angles. When web plates are spliced, not more than three-eighths (⅜) inch clearance between ends of plates will be allowed.

112–3.27B Web Stiffeners

End stiffener angles of girders and stiffener angles intended as supports for concentrated loads shall be milled or ground to secure a uniform, even bearing against the flange angles. Intermediate stiffener angles shall fit sufficiently tight to exclude water after painting.

112–3.27C Web Splices and Fillers

Web splice plates and fillers under stiffeners shall fit within one-eighth (⅛) inch at each end.

112–3.28 EYEBARS

Eyebars shall be straight and true to size, and shall be free from twists folds in the neck or head, or any other defect affecting their service strength. Heads shall be made by upsetting, rolling or forging. Welds in the body portions or in the head of bars will not be permitted. The form of the heads may be determined by the dies in use at the works where the eyebars are to be made, if satisfactory to the Engineer. The thickness of head and neck shall not overrun more than one-sixteenth ($\frac{1}{16}$) inch.

Before boring, each eyebar shall be properly annealed and carefully straightened. Pinholes shall be located on the center line of the bar and in the centers of the heads. The holes in the ends of bars shall be so accurately located that when the bars of the same truss panels are placed in a pile, the pins may be completely inserted in the pinholes without driving. All eyebars intended for the same locations in trusses shall be interchangeable.

112–3.29 ANNEALING

All eyebars shall be annealed by heating uniformly to the proper temperature followed by slow and uniform cooling in the furnace. The temperature of the bars shall be under full control at all stages.

Slight bends on steel members of secondary importance may be made without heating the metal. Crimped web stiffeners need not be annealed.

112–3.30 PINS AND ROLLERS

Pins and rollers shall be of forged steel of the class specified on the plans, accurately turned to detailed dimensions and shall be smooth, straight and free from flaws. The final surface shall be produced by a finishing cut.

Pins and rollers seven (7) inches or less in diameter may be either forged and annealed or cold-finished carbon steel shafting.

Pins larger than eight (8) inches in diameter shall have a hole not less than two (2) inches in diameter bored longitudinally through their centers. Pins showing defective interior conditions will be rejected.

Pilot nuts and driving nuts shall be furnished for each size of pin, unless otherwise specified.

112–3.31 BORING PIN HOLES

Pin holes shall be bored true to detailed dimensions, smooth and straight, at right angles with the axis of the members and parallel with each other unless otherwise required. A finishing cut shall always be made.

The length outside to outside of holes in tension members and inside to inside of holes in compression members shall not vary from detailed dimensions more than one-thirty-second ($\frac{1}{32}$) inch. Boring of holes in built-up members shall be done after the riveting is completed.

112–3.32 PIN CLEARANCES

The difference in diameter between the pin and the pin hole shall be one-fiftieth (1/50) inch. All pins shall be fitted to their respective pin holes in the assembled member and numbered.

112–3.33 WELDS

Welding of structural steel will be permitted only to the extent shown on the plans or for the preliminary attachment of small parts to facilitate assembling. Welding, when required, shall be by qualified welders certified as specified in Section 111–3.06C. Welding will not be accepted as a substitute for riveting. When specified all welds, welding procedure, welding materials and preparation of welded surfaces for painting shall conform to the Standard Specifications for Welded Highway and Railway Bridges, current issue, by the American Welding Society, and to the following:

1. Electrodes for manual welding shall be low-hydrogen type conforming to ASTM Designation A 316, and ASTM Designation A 233. The coatings of the low-hydrogen electrodes shall be thoroughly dry when used. Electrodes from hermetically sealed packages must be used within four hours of the time the package is opened. Electrodes that are not used within this four hour period, electrodes that are taken from none-hermetically sealed packages and electrodes that have been exposed more than one hour to air having a relative humidity of 75 per cent or greater, shall be dried for at least two hours at a temperature between 450° and 650°F. before they are used unless otherwise recommended by the manufacturer. After drying, all electrodes shall be stored in an oven at 250° to 350° F. until used. Electrode with coatings that have deteriorated and cracked, or have been rained on or thoroughly wetted in any manner shall be discarded and not used.
2. Flux and wire for submerged arc welding shall be selected to provide a weld with physical characteristics equal to or better than the base metal. Welding flux shall be free from dirt, slag, rust or other foreign material and shall be kept dry in accordance with good industry practice.
3. Preheat may be required where indicated by the thickness of the metal and/or presence of alloying elements in sufficient quantity to so dictate.
4. Welding procedure shall be submitted for approval with shop drawings. This procedure shall specify the type of equipment to be used, electrode selection and preheat requirements.
5. All tension butt welds including the tension area of plate girder webs, for a maximum length of 15 inches from the point of maximum tension, of structural steel shall be subject to 100% X-ray inspection in accordance with the American Welding Society Standards and the Contractor shall furnish radiographs of the specified joints to the Engineer for approval. The acceptability of the welded joints will be determined by the Engineer. All costs in connection with furnishing radiographs to the Engineer for approval, as outlined herein shall be included in the lump sum contract price for "Structural Low Alloy Steel," or "Structural Carbon Steel."

   Radiographic inspection of butt welds which reveal the presence of any of the following defects in excess of the limits indicated shall result in rejection of the weld as being defective:

   a. Cracks—No cracking will be allowed regardless of length or location.
   b. No overlaps, lack of penetration, or incomplete fusion will be allowed.
   c. Inclusions, including slag, porosity and other deleterious material, if less than $\frac{1}{16}$ inch in dimension will be allowed provided the inclusions are so well dispersed that the sum of the greatest dimensions of the inclusions in any linear inch of welded joint shall not exceed $\frac{3}{16}$ inch plus ¼T (where "T" is the thickness of the thinner plate) for groove welds or ½ the weld size for fillet welds, and there shall be no inclusion exceeding $\frac{1}{16}$ inch in length within 1 inch of the edge of the joint.

The Contractor is referred to "Welding Handbook" of the American Welding Society, fourth edition, Section 1, page 8.38 and the American Welding Society Inspection Handbook for Manual Arc Welding B 1.1-45, Part C, page 114.

Radiographic procedure, equipment and materials shall conform to the requirements of ASME Boiler Code, Section VIII, paragraph UW-51. Radiographs shall be made by X-ray and shall be clear and of good workmanship. Two or more penetrameters shall be used as directed by the Engineer. Layout of radiographs shall conform to the requirements as shown on the Standard Plan for Identification of Radiographs of Welds.

Radiographic operators shall be experienced and capable personnel, and shall submit a report interpreting the radiographs to the Engineer without recommendation.

The welds which are to be radiographed shall be ground or prepared by other suitable mechanical process to a degree that the resulting radiographic contrast due to any remaining surface irregularities cannot be confused with that of any objectionable defect. The weld surface shall merge smoothly into the plate surface.

The welds shall be radiographed with a technique which will produce films having a sensitivity of 2%. As a check on the radiographic technique, suitable thickness gages or penetrameters shall be used. The material of the penetrameter shall be substantially the same as that of the plate under examination. In addition to other markings, weld areas and film must be suitably marked to allow for physically matching the radiograph with the examined metal at any time after film has been processed. Film exposed by more than one radioactive source for a single exposure will not be accepted. The minimum conditions given in the paragraph on Geometrc Factors, page 8.51 of Section 1 of the Welding Handbook shall be observed.

112-3.33A Corrections in Welding

In lieu of the rejection of an entire piece or member containing welding which is unsatisfactory or indicates inferior workmanship, the following corrective measures may be permitted by the Engineer, whose specific approval shall be obtained for making each correction.

Where the following requirements prescribe the removal of part or all of the weld or a portion of the base metal, such removal shall be effected by chipping, grinding, oxygen cutting, oxygen gouging, or air-arc gouging.

Defective or unsound welds shall be corrected either by removing and displacing the entire seal, or as follows:

a. *Excessive Convexity*—Reduce to size by removal of excess weld metal.

b. *Shrinkage cracks, cracks in base metal, craters, and excessive porosity*—Remove defective portions of base and weld metal down to sound metal, and deposit additional sound weld metal.

c. *Undercutting, undersize, and excessive concavity*—Clean and deposit additional sound weld metal.

d. *Overlapping and incomplete fusion*—Remove and replace the defective portion of the weld.

e. *Slag inclusions*—Remove the parts of the weld containing slag, and fill with sound weld metal.

f. *Removal of adjacent base metal during welding*—Clean and form full size by depositing additional weld metal.

Where corrections require the depositing of additional weld metal, the electrode used shall preferably be smaller than the electrode used for making the weld. Electrodes larger than $\frac{5}{32}$ inch diameter preferably shall not used for repairing undercut base metal. Surfaces shall be cleaned thoroughly before welding.

A cracked weld shall be removed throughout its length unless, by the use of acid etching, magnetic inspection, or other equally positive means, the extent of the crack can be ascertained to be limited, in which case sound weld metal two (2) inches or more beyond each end of the crack shall not be removed.

Defective parts of a weld shall be cut out without substantial removal of the base metal unless cracks or other defects remain which require further removal. The weld or base metal shall not be nicked or undercut in chipping, grinding or gouging.

Where work performed subsequent to the making of a deficient weld has rendered the weld inaccessible or has caused new conditions which would make the corrections of the deficiency dangerous or ineffectual, the original conditions shall be restored by removal of welds, or members, or both, before making the necessary corrections, or else the deficiency shall be compensated by additional work according to a revised design approved by the Engineer.

Calking of welds shall not be done. Improperly fitted and misaligned parts may be cut apart and rewelded. Members distorted by the heat of welding shall be straightened by mechanical means or by the carefully supervised application of a limited amount of localized heat. For hot-rolled steels, heated areas shall not exceed 1200° F. (a dull red color). Parts to be heated for straightening shall be substantially free of stress from external forces, except when mechanical means are used in the application of heat.

112–3.34 SCREW THREADS

Screw threads shall make close fits in the nuts and shall be U. S. Standard, except that for diameters greater than one and one-half (1½) inches they shall be made with six (6) threads to the inch.

112–3.35 MEASURING CAMBER

A camber diagram shall be furnished the Engineer showing the camber at each panel point for each truss, taken from actual measurements while the truss is assembled.

112–5 MEASUREMENT AND PAYMENT

Payment will be made at the lump sum contract price for such of the following bid items as are included and shown in any particular contract:

1. "Structural Carbon Steel," lump sum.
2. "Structural Low Alloy Steel," lump sum.

112–5.01 STRUCTURAL CARBON STEEL

Structural carbon steel will be paid for at the lump sum contract price for "Structural Carbon Steel," which price shall be full compensation for all costs in connection with furnishing all materials, labor, tools and equipment necessary for the manufacture, fabrication, transportation, erection and painting of all structural carbon steel used in the completed structure, including the providing of such other protective coatings as may be shown on the plans or specified in the special provisions.

For steel structures the estimated weight of the structural carbon steel in the project will be shown on the plans or in the special provisions. In the event any change in plans is made which will affect the weight of material to be furnished, payment for the additional structural carbon steel required as a result of the change in plans will be made at a unit price per pound obtained by dividing the Contractor's lump sum bid for structural carbon steel by the total estimated weight of structural carbon steel shown on the plans, or in the special provisions.

Reductions in weight due to a change in plans will be made at the same rate as determined above and will be deducted from payments due the Contractor.

Prospective bidders shall verify the estimated weight of structural carbon steel before submitting a bid. No adjustment other than for approved changes will be made in the lump sum bid even though the actual weight may deviate from the stated estimated weight.

For concrete and timber structures, where the structural carbon steel is a minor item, no estimated weight will be given for the structural carbon steel. In the event any change in plans is necessary which will affect the weight of material to be furnished for this type of structure, the payment or reduction for the revision in quantity will be made at a unit price per pound obtained by dividing the Contractor's lump sum bid for the structural carbon steel by the calculated weight of the original material. The calculated weight will be established by the Engineer and be based on an estimated weight of 490 pounds per cubic foot for steel.

Any change in plans which affects the weight of materials to be furnished as provided herein will be subject to the provisions of Section 4.03.

112–5.02 STRUCTURAL LOW ALLOY STEEL

Payment for "Structural Low Alloy Steel" will be made on the same lump sum basis as specified for structural carbon steel.

112–5.03 MISCELLANEOUS METAL

For the purpose of payment, such minor items as bearing plates, pedestals, forged steel pins, anchor bolts, field rivets, etc., unless otherwise provided, shall be considered as structural carbon steel even though made of other materials.

Section 113—Castings, Steel Forgings and Miscellaneous Metals

113–1 DESCRIPTION

These specifications shall cover all castings, steel forgings and miscellaneous metals required in the completed structure as shown on the plans.

113–2 MATERIALS

113–2.01 STEEL CASTINGS

Steel castings shall conforms to the requirements of ASTM Designation A 27, Mild to Medium Strength Carbon-Steel Castings for General Application, grade 65-30, unless otherwise designated on the plans or in the special provisions.

113–2.02 GRAY-IRON CASTINGS

Gray-iron castings shall conform to the requirements of the standard specifications for Gray-iron Castings, ASTM Designation A 48. The class of castings to be furnished shall be that designated on the plans or in the special provisions.

113–2.03 MALLEABLE IRON CASTINGS

Malleable iron castings shall conform to the requirements of the standard specifications for Malleable Iron Castings, ASTM Designation A 47.

113–2.04 STEEL FORGINGS AND STEEL SHAFTING

Steel forgings shall conform to the requirements of the standard specifications for Carbon-Steel Forgings for General Industrial Use, ASTM Designation A 235. The classes of forgings to be furnished shall be those shown on the plans or called for in the special provisions.

Steel shafting shall conform to the specifications for Cold-Finished Carbon Steel Bars and Shafting, ASTM Designation A 108-52 T, Grade Designation 1016-1030 inclusive, unless otherwise specified.

113–2.05 BRONZE CASTINGS

Bronze castings shall conform to the requirements of ASTM Designation B 22 Alloy B, Bronze Castings for Bridges and Turntables.

113–2.06 COPPER SEALS

Copper sheets for seals shall conform to the requirements of ASTM Designation B 152, Copper Sheet, Strip, Plate and Rolled Bar. They shall be Type FRTP, light cold rolled, and furnished in flat sheets each not less than 0.018 inch in thickness.

All splices or joints shall be carefully brazed or soldered to produce a continuous watertight seal for the full length of each unit.

113–2.07 NODULAR IRON CASTINGS

Nodular iron castings shall conform to the requirements of ASTM Designation A 339, Grade 60-48-10, unless otherwise designated on the plans or in the special provisions.

113–3 CONSTRUCTION DETAILS

113–3.01 GENERAL

The provisions outlined in Section 112 for structural steel and which are applicable, including painting, shall also apply to castings, steel forgings and miscellaneous metals.

Castings shall be true to pattern in form and dimensions, free from pouring faults, sponginess, cracks, blow holes and other defects in positions affecting their strength, appearance and value for the service intended.

Castings shall be cleaned of scale and sand to present a smooth, clean and uniform appearance.

Castings shall be boldly filleted at angles and the arrises shall be sharp and perfect. The surfaces shall have a workmanlike finish.

Iron and steel castings and forgings shall be annealed prior to any machine work unless otherwise specified.

Surfaces of cast pedestals and shoes which will come in contact with metal surfaces shall be planed and those which will bear on concrete shall be rough finished.

In planing the surfaces of expansion bearings, the cut of the tool shall be in the direction of expansion.

113–5 MEASUREMENT AND PAYMENT

Payments will be made at the lump sum price, or by the pound for the cast or forged metal (kind) or copper seals shown on the plans or in the proposal.

In case no bid item is included in the proposal and payment is not otherwise provided, the castings, forgings, and miscellaneous metal shall be considered as incidental to the construction and all costs therefor shall be included in the unit contract prices for the payment items involved and shown.

Section 114—Timber and Lumber

114–1 DESCRIPTION

All timber and lumber in permanent structures except guard rail posts and guide posts, or as otherwise specified, shall be Douglas fir or larch. Guard rail posts and guide posts shall be Douglas fir, Western red cedar, West Coast hemlock, or larch, as specified on the plans.

114–2 MATERIALS

114–2.01 GRADE REQUIREMENTS

Unless otherwise noted on the plans or in the special provisions, all timber and lumber shall be graded as shown below:

114–3 CONSTRUCTION DETAILS

114–3.01 SURFACING AND SEASONING

All lumber shall be sized as indicated on the plans, except that lumber which is to be painted shall in all cases be surfaced on four sides.

Lumber to be painted shall be thoroughly air dried or kiln dried to an equivalent moisture content, and shall be stored in such a manner as to remain in a thoroughly dry condition until being placed in the work.

114–3.02 PROTECTION AGAINST END CHECKING

Immediately upon acceptance by the inspector at the mills all ends of sticks 3 x 3 inches and larger (except decking), shall be treated with a gloss oil or other effective protective end coating.

114–3.03 INSPECTION

All timber and lumber purchased or used under these specifications shall meet the tabulated working stress requirements specified in Section 114–2.01. Lumber graded under the applicable paragraph numbers of the current grading and dressing rules of the West Coast Lumber Inspection Bureau or the Western Pine Association, as defined in Section 114–2.01. will be accepted provided that it is certified to the City of Seattle by a certificate of inspection executed by one of the above named associations or by the Pacific Lumber Inspection Bureau. Certificates of inspection shall identify the destination or job for which the material is intended and, if specified, each piece inspected and certified shall be marked to indicate such inspection. Such certification or grade marking, however, shall not constitute an acceptance of the material, and the Engineer may reject any and all lumber or timber that does not comply with the specifications. In the event of a rejection each of the above inspection services shall acquiesce to reinspection of such material under the reinspection provisions in the rules of the association under which the material is graded and sold.

114–3.04 HEWN AND ROUND TIMBERS

Hewn timber may be substituted for sawed timber, subject to the approval of the Engineer, and shall be of the same cross section and conform to the grading rules of structural timber.

114–4 MEASUREMENT

For the purposes of measurement of timber and lumber, the nominal thickness and width shall be used; also the actual lengths of the individual pieces in the finished structure shall be used, without deduction for daps, cuts or splices. In the measurement of laminated timber decking, the number of pieces shall be the required number, of the size specified, after dressing, and the length of each lamination shall be the length remaining in the finished structure.

114–5 PAYMENT

Payment wiii be made at the unit contract price per thousand feet board measure (M. B. M.) for "Timber and Lumber (untreated or name treatment)," which price shall be full compensation for all materials, including hardware, and for all labor, tools and equipment necessary for the manufacture, fabrication, preservative treatment, seasoning, transportation, erection and painting of the timber and lumber used in the completed structure.

Section 115—Preservative Treatment for Timber, Lumber and Piles

115–1 DESCRIPTION

Preservative treatment of the type specified shall be applied to timber, lumber or piles as shown on the plans, or as required by the special provisions.

115–2 MATERIALS

115–2.01 CREOSOTE OIL

Creosote for both pressure treatment and surface treatment shall meet the requirements of the standard specifications for Creosote, ASTM Designation D 390.

115–2.02 CHROMATED ZINC ARSENATE (BOLIDEN SALTS)

Chromated Zinc arsenate shall have the following composition:

Arsenic acid (H_3AsO4) 20%
Sodium arsenate (Na_2AsO_4) 21%
Sodium dichromate ($Na_2CR_2O_7 2H_2O$) 16%
Zinc sulfate ($ZnSO_4.7H_2O$) 43%

subject to the following tolerances:

The composition of the solid preservative or of the preservative present in a treating solution may vary within the following limits:

Pentavalent arsenic calculated as total H_3AsO_4 plus Na_2HAsO_4 in a ratio of 20 to 21 ..... 37% Min.
Hexavalent chromium calculated as $Na_2Cr_2O_7.2H_2O$ ..... 14% Min.
Zinc calculated as $ZnSO_4.7H_2O$ ..... 41% Min.

The ratio of arsenic acid to sodium arsenate shall be deemed to fall within the prescribed limits of the percentage of arsenic, as As_2O_5, in the solid preservative or in the salts in solution lies between 26.4 and 31.1 and the pH of a solution containing 25 grams of the preservative per liter of solution at 25° C. lies between 2.90 and 3.50.

The solid preservative shall contain at least 95 per cent of the active ingredients listed above.

115–2.03 TANALITH (WOLMAN SALTS)

Tanalith shall have the following composition:

Sodium Fluoride (NaF) ..... 22% to 25 %
Sodium Arsenate (Na_2HAsO_4) ..... 22% to 25 %
Sodium Chromate (Na_2CrO_4) ..... 34% to 37½%
Dinitrophenol $(No_2)_2.C_6H_3.OH$) ..... 5% to 12½%

The solid preservative shall contain at least 95% of the active ingredients listed above.

The pH of a treating solution shall not be less than 7.2 nor more than 7.8.

115–2.04 AMMONIACAL COPPER ARSENITE (CHEMONITE)

Ammoniacal copper arsenite shall have the following composition:

Copper hydroxide ($Cu(OH)_2$) ..... 55.7% to 57.7%
Arsenic Trioxide (As_2O_3) ..... 38.7% to 40.7%
Acetic Acid (CH_3COOH) 1.6%

The above shall be dissolved in a solution of ammonia (NH_3) in water. The weight of ammonia contained in a treating solution shall be from 1.5 to 2.0 times the weight of the copper hydroxide.

The solid preservative shall contain at least 95% of the active ingredients listed above.

The net retention of the preservative shall be calculated as pounds of Cu O plus As_2O_5 deposited in the wood in the proportion of 1.5 parts of the former to 1.3 parts of the latter. An excess of either ingredient above this proportion shall not be counted in the net retention.

Tabulated Working Stresses

Structural Purpose	Extreme fibre in bending or tension parallel to grain, psi	Horizontal shear, max., psi	Compression perpendicular to grain, psi	Compression parallel to grain, psi	Modulus of elasticity in bending, psi	*West Coast Lumber Inspection Bureau	*Western Pine Association
Timber and Lumber in Permanent Structures							
Douglas Fir (except 4" laminated decking)	1500	120	390	1000	1,600,000	"Construction Stress Grade" Beams and Stringers	"Construction Stress Grade" Beams and Stringers
Douglas Fir, 4" laminated decking†	1900	120	415	1400	1,700,000	"Select Structural" Light Framing Stress Grade	"Select Structural" Light Framing Stress Grade
Guard Rail Posts							
Douglas Fir	1200	120	390	1200	1,600,000	"Construction Stress Grade" Posts and Timbers	"Construction Stress Grade" Posts and Timbers
West Coast Hemlock	1200	100	365	1100	1,400,000	"Construction Stress Grade" Posts and Timbers	"Construction Stress Grade" Posts and Timbers
Larch	1200	120	390	1200	1,600,000		"Construction Stress Grade" Posts and Timbers
Guide Posts							
Douglas Fir	1500	120	390	1200	1,700,000	"1500f Industrial" Light Framing	"1500f Industrial" Light Framing
West Coast Hemlock	1500	100	365	1000	1,540,000	"1500f Industrial" Light Framing	"1500f Industrial" Light Framing
Larch	1500	120	390	1200	1,700,000		"1500f Industrial" Light Framing
Western Red Cedar	1300	120	145	900	1,000,000	"Select Merchantable" Joints and Planks	"Select Merchantable" Joints and Planks
Other Timber and Lumber—All Species	1200	120	390	1200	1,600,000		

†Hit or miss pieces with a minus tolerance of one-sixteenth ($\frac{1}{16}$) inch will be allowed on laminated decking.

*The indicated timber and lumber grades specified in the 1961 Standard Grading and Dressing Rules of the respective associations meet the Tabulated Working Stress Requirements for the various specified stress grades. In the event the grading and dressing rules of either Association are revised, equivalent grades meeting the tabulated working stress requirements will be required on the contract unless otherwise stated in the Special Provisions.

	(*)HEAVY PETROLEUM SOLVENT		LIGHT PETROLEUM SOLVENT	
	Max.	Min.	Max.	Min.
Specific Gravity at 60 F°/60° F.	.....	0.85 (API35 Max.)	0.934 (API20 Min.)	0.825 (API40 Max.)
Water and Sediment, per cent	0.5	.....	0.5	.....
Flash Point, Pensky-Martens closed tester, ° F.	.....	190	.....	145
Distillation: Total distillate in per cent by volume to 500° F.	50	.....	60	.....
625° F.	.....	.....	.....	90
(**)Viscosity, Saybolt Universal at 210° F., seconds	60	.....	.....	10
Solvency for pentachlorophenol, 75° F., per cent by weight	.....	10	.....	10
Wood staining characteristics	Brown to Black	.....	Light Brown to none	.....

(*)Unless otherwise called for in the special provisions, heavy petroleum solvent shall be used.
(**)Petroleum of higher viscosity may be used provided that penetration requirements are met.

115–2.05 PENTACHLOROPHENOL

Pentachlorophenol shall conform to the requirements of AASHO Designation M 133. Solvents used in pentachlorophenol solutions shall be petroleum oils complying with the following requirements:

The preservative solution used in the treatment shall consist of not less than four and one-half (4½) per cent, nor more than five and one-half (5½) per cent by weight of pentachlorophenol dissolved in the proper petroleum solvent.

115–3 DETAILS OF PRESERVATIVE TREATMENT

115–3.01 GENERAL REQUIREMENTS

115–3.01A Seasoning before Treatment

Timber, lumber or piling may be air seasoned or kiln dried before treatment until the moisture remaining in the wood will not prevent the injection and proper distribution of the specified amount of preservative. For air seasoning, the materials shall be stored as follows: Lumber shall be segregated by at least one (1) inch strips with an air space of one (1) inch or more between each two pieces of lumber in any layer; for caps, stringers, posts or larger timber, at least two (2) inch strips shall be used to separate the layers. Alleys at least three (3) feet wide shall be left between rows of stacks and the material shall be at least twelve (12) inches off the ground on concrete or treated timber sills. Piling shall be stored in like manner, placing as nearly as practicable only one (1) length in a stack, using at least two (2) inch strips or saplings of equal size between each layer and reversing all piling in every other layer in order to keep the stacks level. The space under and between the rows or stacks shall be kept free at all times of rotting wood, weeds or rubbish. The yard shall be so drained that no water will stand under the stacks or in their immediate vicinity.

115–3.01B Placing in Treating Cylinders

Each cylinder charge shall consist of pieces approximately equal in size and moisture and sapwood content, into which approximately equal quantities of preservative fluid can be injected. Pieces shall be so separated as to insure contact of steam and preservatives with all surfaces.

Timber and lumber shall be framed, bored, incised, or chamfered, where possible, before treatment.

115–3.01C Incising

In order to secure a more uniform penetration, sawed timber and lumber measuring three (3) inches or over in thickness by four (4) inches or over in width shall be incised by a machine having power-driven rolls designed to incise to a uniform depth and continuity of predetermined pattern. Timber four (4) inches and over shall be incised on the wide faces only.

The shape of the teeth shall conform to a type so designed that the points are sharp and the edges wedge-shaped, so that, upon entering and leaving the wood, a spreading of the fibers is accomplished.

115–3.01D Plant Equipment

Treating plants shall be equipped with thermometers and gauges necessary to indicate and record accurately the conditions at all stages of treatment, and all equipment shall be maintained in condition satisfactory to the purchaser. The apparatus and chemicals necessary for making the analyses and tests required by the purchaser shall also be provided by the operators, and be kept in condition for use at all times.

115–3.02 PRESSURE PROCESSES

115–3.02A Creosote Treatments

115–3.02A1 Oil Seasoning for Douglas Fir

Green Douglas fir timber or piling shall be seasoned by boiling in oil under a vacuum until the moisture remaining in the wood will not prevent the injection and proper distribution of the specified amount of preservative.

The material shall be boiled in creosote under a vacuum at temperatures not less than 180° F., and not more than 200° F., for lumber nor 220° F. for piling.

A minimum vacuum of twenty (20) inches shall be maintained during boiling. The seasoning period shall be maintained until condensation passing off from the timber is at the rate of approximately one-tenth (1/10) of a pound per cubic foot of timber per hour.

115–3.02A2 Penetration

The range of temperature, pressure and time duration shall be controlled so as to result in a maximum penetration by the quantity of preservative injected. The vacuum requirements stipulated are in inches of mercury at sea level, and necessary corrections shall be made for altitude.

In Douglas Fir the penetration in inches and the per cent of sapwood to be impregnated in a full cell process for the specified amount of creosote oil shall be as follows:

For Piling and Timber 12″ x 12″ and larger:

Specified retention of creosote per cut. ft.	*10 lb.*	*12 lb.*	*14 lb.*	*16 lb.*
Peneration in inches, minimum	¾	¾	⅞	1
Per cent of sapwood to be impregnated, minimum	85, or 1⅝ inch maximum penetration	100	100	100

For timber less than 12″ x 12″ the required depth of penetration shall be determined by the following formula; but in no case shall the depth of penetration be less than ⅜″:

$$P = Ps\ R/Rx$$

Where

P=required penetration.

Ps=specified penetration for 12″ x 12″ timbers.

R=ratio of the volume of the piece in question to its superficial area.

Rs=ratio of the volume of 12″ x 12″ timber to its superficial area.

The penetration of the preservative shall be based on black or dark oil and in no case will light discoloration of the wood due to treatment be taken into consideration in measuring the depth of penetration.

Tests for penetration shall be made by taking borings with an increment borer or a five-eighths (⅝) inch augur. All holes so bored shall be plugged by the Contractor with tight-fitting creosoted plugs.

As many penetration tests of lumber and piling shall be made as may be considered necessary by the Inspector. In case of piling, the holes shall be bored midway between the ends. In case of timber and lumber, every fourth stick of the charge may be bored.

115–3.02A3 Amount of Preservative

The amount of preservative to be used shall be as shown on the plans or specified and this amount shall be retained in the timber unless the oil has been injected to refusal. Unless otherwise specified, the amount of preservative retained shall be as follows:

For piles and timber in general bridge construction: Full-cell process, not less than ten (10) pounds of oil per cubic foot of timber.

For piles or timber in salt water subject to the attack of marine borers: Full-cell process, not less than fourteen (14) pounds per cubic foot of timber.

115–3.02A4 Heating with Oil

Air seasoned or kiln dried Douglas fir shall be heated in oil prior to the pressure treatment. The preservative shall be introduced to the timber at a temperature of 160° F., to 180° F., and the temperature shall be gradually raised to 200° F., and held at that temperature for a period of from three (3) to five (5) hours, or a sufficient length of time to obtain an even temperature throughout the material.

115–3.02A5 Full-cell Process

Following the heating period in the case of air seasoned or kiln dried material, and the seasoning under vacuum period in the case of material that is oil seasoned, the cylinder shall be filled with creosote and the pressure applied as required to a maximum limit of one hundred seventy-five (175) pounds per square inch and maintained, taking into consideration the quantity of creosote absorbed during the heating with oil, until the specified absorption of creosote has been obtained.

Temperature of the creosote during the pressure period shall be as high as possible, with a minimum limit of 160° F., and a maximum limit of 200° F. After pressure is completed, the cylinder shall be emptied of creosote and a vacuum of at least twenty (20) inches promptly created and maintained for a sufficient period of time to free the material from dripping creosote.

115–3.02A6 Empty-cell Process

Following the heating period, in the case of air seasoned or kiln dried material, and the seasoning under vacuum period in the case of material that is oil seasoned, the material shall be subjected to an air pressure of sufficient intensity and duration which, in the judgment of the operator, is sufficient to accomplish the final retention of creosote specified. The preservative shall then be introduced, the air pressure being maintained constant, until the cylinder is completely filled.

Creosote shall then be pressed from the measuring tanks into the wood in a quantity sufficient, in the opinion of the operator, to leave the required retention at the completion of the process herein described. Maximum pressure shall in no case exceed two hundred (200) pounds per square inch. The temperature of the creosote during the pressure period shall be as high as possible, within a minimum limit of 160° F., and a maximum of 200° F.

After pressure is completed, the cylinder shall be quickly emptied of creosote and a vacuum of at least twenty (20) inches created and maintained for such period of time as may be required to remove dripping creosote from the material.

115–3.02B Chromated Zinc Arsenate (Boliden Salts) Treatment

The following pressure process shall be used for the treatment of timber and lumber with chromated zinc arsenate:

The treating solution shall be of uniform concentration and of the minimum strength necessary to obtain the required retention of preservative with the largest volumetric absorption possible.

Before treatment all timber and lumber shall be air seasoned or kiln dried until the moisture content is below twenty (20) per cent. Timber containing more than twenty (20) per cent moisture shall be classed as green timber and shall be given an artificial seasoning in an airtight retort by a bath of live steam at 10 to 15 pounds per square inch pressure for a period of from four to ten hours, followed by a vacuum of at least twenty-two (22) inches for one (1) hour, or with alternating periods of vacuum and pressure as may be found necessary to put the timber into condition for treatment. The cylinder shall be relieved continuously or frequently enough to prevent condensate from accumulating in sufficient quantity to reach the wood.

After the seasoning process has been completed the material shall be subjected to a vacuum of not less than twenty-two (22) inches for at least thirty (30) minutes, either before the cylinder is filled or during the period of heating in the preservative. If not already full the cylinder shall then be filled without breaking the vacuum. The pressure shall then be raised to not more than 150 pounds per square inch. The temperature of the preservative shall not exceed 100 degrees F. at any time during the process. The material shall be held under pressure until there is obtained the volumetric injection that will insure the stipulated retention, or until the wood is treated to refusal.

After the pressure period is completed, the cylinder shall be emptied speedily of preservative, and a vacuum of not less than twenty-two (22) inches created promptly and maintained until the wood can be removed from the cylinder free of dripping preservative.

Unless otherwise stated on the plans or in the special provisions, the minimum net retention of chromated zinc arsenate shall be as follows:

Timber and lumber for use under moderate leaching conditions	1.00 lb. per cu .ft.
Timber and lumber for use not in contact with the ground or in water	0.50 lb. per cu. ft.
Posts	1.00 lb. per cu. ft.

The minimum penetration of preservative shall be three-eighths (⅜) inch or 90% of sapwood for timber

under five inches thick or ½" or 90% of sapwood for timber over five inches thick.

All timber and lumber, after treating with chromated zinc arsenate, shall be seasoned by kiln drying or air drying under cover before placing in the structure.

Penetration shall be determined by sampling each charge as may be desired. Any holes which may be bored shall be filled with tight fitting treated plugs.

All timber and lumber, after treatment with chromated zinc arsenate shall be seasoned by kiln drying or air drying under cover before being erected into the structure. After seasoning, the average moisture content of material six inches (6") or more in thickness shall not exceed eighteen per cent (18%) for the outside one and one-half inch (1½") zone and the average moisture content of material less than six inches (6") in thickness shall not exceed eighteen per cent (18%) for the outside one inch (1") zone.

The moisture content shall be determined by the "over-drying" method, from samples collected by increment cores or borings to the depth of the zone prescribed above for the two size classes of material. Samples shall be taken from the centers of wide faces, midway between the ends of the pieces and sufficient pieces shall be sampled to provide a truly representative test. A minimum of twelve (12) cores shall be taken for each size class in each kiln drying charge, or in each lot of air seasoned lumber. All cores shall be combined into one composite sample if the material is all of one size, class or into two samples if both size classes are represented. The moisture content as determined from these samples shall be considered to be the moisture content of the lot of materials tested. Material having a moisture content in excess of eighteen per cent (18%) shall be subjected to further seasoning before its use is permitted. All timber and lumber seasoned under this specification shall be subject to the grading rules pertaining to checks, after undergoing the seasoning process.

All holes bored for sampling timber and lumber to determine the moisture content after seasoning shall be filled with tight fitting treated and seasoned plugs.

115–3.02C Tanalith (Wolman Salts) Treatment

The following pressure process shall be used for the treatment of timber and lumber with Wolman Salts:

The treating solution shall generally have a strength of concentration in water of 1.8% to 2% of Wolman Salts in 98.2% to 98% or water; but the solution shall be no stronger than necessary to obtain the required retention of preservative specified below, with the greatest volumetric absorption practicable.

All timber and lumber treated with this process shall be seasoned before treatment as outlined in Section 115–3.02B except that the temperature of the preservative during the treating process shall not exceed 140° F.

Unless otherwise stated on the plans or in the special provisions, the minimum net retention of tanalith shall be as follows:

Timber and lumber for use under moderate leach conditions	0.55 lb. per cu. ft.
Timber and lumber for use not in contact with ground nor in water	0.35 lb. per cu. ft.
Posts	0.55 lb. per cu. ft.

The minimum penetration shall be as stated in Section 115–3.02B.

Penetration shall be determined by sampling each charge, as may be desired. Any holes bored shall be filled with tight-fitting treated plugs.

115–3.02D Ammoniacal Copper Arsenite (Chemonite) Treatment

The following pressure process shall be used for treatment of timber and lumber with ammoniacal copper arsenite:

The treating solution shall be of uniform concentration and of the minimum strength necessary to obtain the required retention of preservative with the largest volumetric absorption possible.

Seasoning of timber, treatment and drying after treatment shall be as specified in Section 115–3.02B, except that the temperature of the preservative shall not exceed 150° F. at any time during the treating process.

Unless otherwise stated on the plans or in the special provisions the minimum net retention of ammoniacal copper arsenite shall be as follows:

Timber and lumber for use under moderate leaching conditions	0.45 lb. per cu. ft.
Timber and lumber for use not in contact with ground nor in water	0.30 lb. per cu. ft.
Posts	0.45 lb. per cu. ft.

The minimum penetration of preservative shall be as specified in Section 115–3.02B.

Penetration shall be determined by sampling each charge as may be desired. Any holes bored shall be filled with tight-fitting treated plugs.

115–3.02E Pentachlorophenol Treatment

Pentachlorophenol pressure treatment process shall be in accordance with the current standard of the American Wood-Preservers Association for Pressure Preserved Wood for Highway Construction. The minimum net retention of the dry salt shall be 0.50 pound per cubic foot of wood, except as noted elsewhere in these Specifications. Treatment shall be by the empty cell process.

115–4 MEASUREMENT

Preservative treatment of timber, lumber and piles shall not be considered as a separate contract item and no method of measurement is provided apart from the material to which the treatment is applied.

115–5 PAYMENT

Payment for the preservative treatment of timber, lumber and piles shall be included in the unit contract prices for "Timber and Lumber (treatment)" or "Furnishing Timber Piling (treatment)," except that when material otherwise untreated is to receive brush treatment the cost of such treatment shall be included in the unit contract price for "Timber and Lumber (untreated)."

Section 116—Paints and Painting

116–1 DESCRIPTION

Steel and timber structures, or particular parts thereof, and such concrete surfaces as may be specified, shall be coated with an appropriate paint as hereinafter set forth, or as described under the particular section dealing with the surfaces to be painted.

116–2 MATERIALS

116–2.01 RAW MATERIALS

Raw materials for paints shall conform to the requirements of the specifications listed below. The acceptance of particular lots of raw materials by the Engineer shall in no way obligate him to accept lots of finished paint that do not conform to the requirements of these specifications. When not specifically detailed herein the raw materials shall meet the requirements of the applicable Federal specification.

Red lead pigment and paste, ASTM Designation D 83, ninety-seven (97) per cent grade.

Basic carbonate white lead pigment and paste, ASTM Designation D 81.

Titanium pigments, ASTM Designation D 476. Titanium dioxide for use in exterior white paints shall conform to the requirements of ASTM Desgnation D 476, Type 1. Titanium pigments used in tinted paints and enamels shall be of the exterior chalk resistant type.

Chrome oxide green, ASTM Designation D 263. The tinting properties shall be such that the standard color of the formulas using chrome oxide green can be produced

without departing from the limits of composition given in those formulas.

Iron-Blue pigment and paste, ASTM Designation D 261.

Lampblack pigment and paste, ASTM Designation D 85.

Ochre pigment and paste, ASTM Designation D 85.

Aluminum paste, ASTM Designation D 92, Type II, Class A. Paints made with the paste shall be smooth and highly lustrous.

Chrome yellow pigment and paste, ASTM Designation D 211.

Zinc oxide pigment and paste, ASTM Designation D 79.

Flaked metallic lead paste shall consist of pig lead in the form of fine flakes combined with mineral spirits (ASTM Designation D 235) and a fatty acid to form a paste suitable for use as an ingredient in paint. It shall contain no fillers or adulterants. The paste shall conform to the following requirements:

Non-volatile matter at 105° C to 110° C, per cent	90 to 92
Easily extracted fatty and only matter, per cent	2 maximum
Total impurities other than fatty and oily matter, per cent	1 maximum
Coarse particles:	
Retained on a No. 100 sieve, per cent	2 maximum
Retained on a No. 200 sieve, per cent	11 maximum
Retained on a No. 325 sieve, per cent	20 maximum

The paste when added to paint of the following formula in the proportion of three (3) pounds of paste to one (1) gallon of paint shall cause a marked reduction in the gloss of the dried paint, a substantial improvement in spreading properties, and shall eliminate "crawling" of a succeeding coat of Formula B-1-57 paint applied twenty-four (24) hours later.

Dry red lead	100 pounds
Raw linseed oil	3 gallons
Liquid drier	1.5 pints
Aromatic petroleum thinner-water white low aniline petroleum solvent Kauri-Butanol value	70 (Min.)

Raw linseed oil, ASTM Designation D 234.

Boiled linseed oil, ASTM Designation D 260.

Heat bodied linseed oil, Federal TT-0-367, Type II, Z to Z6 viscosity, shall be prepared by heat-treating pure linseed oil. The treated oil shall be soluble in all proportions in turpentine and mineral spirits.

Turpentine shall be gum spirits of turpentine, ASTM Designation D 13.

Mineral spirits, ASTM Designation D 235.

Liquid drier, Federal TT-D-651c.

Spar varnish shall meet the requirements of Federal TT-V-119, except that the test liquid for hydrocarbon resistance shall be white gasoline, and in addition thereto a dried film of the varnish after immersion for twenty-four (24) hours in a two (2) per cent solution of sodium hydroxide shall show no blistering, whitening or loss of film when subjected to the following test:

Immerse a clean glass test tube, one-half inch by six inches (½" x 6") into the varnish so as to coat the closed end to a depth of three (3) inches. Remove from the varnish and allow to dry mouth downwards for forty-eight (48) hours. Immerse the tube in sodium hydroxide solution and examine at the end of twenty-four (24) hours. This varnish shall be used as a mixing varnish for aluminum paint and in the manufacture of concrete primer.

Zinc yellow (zinc chromate), ASTM Designation D 478.

Red iron oxide, ASTM Designation D 48, Class I, except that the minimum total iron oxide, calculated as Fe_2O_3 shall be 85.0%.

Yellow iron oxide, hydrated, ASTM Designation D 768.

Fibrous magnesium silicate (asbestine), ASTM Designation D 605.

Silica shall be finely ground amorphous or crystalline material. It shall have a maximum oil absorption of 50 when tested in accordance with ASTM Designation D 281.

Alkyd vehicle, Federal TT-R-266a, Type II, Class A.

Anti-skinning agent shall have no deleterious effect on the drying time of the finished paint. It shall effectively prevent skinning when added in the amounts specified in each formula and tested in accordance with Federal TT-P-14b, Method 414.1.

Aluminum stearate, Military MIL-A-15206a.

Papthenate driers, Federal TT-D-643b.

Soya lecithin shall be pure Soya lecithin.

116–2.02 PAINT FORMULAS

116–2.02A General

All paints shall be made from materials meeting the requirements specified in Section 116–2.01. The paint shall be made in accordance with the following formulas and shall meet the requirements set forth above as well as the special requirements set forth for each formula. The formulas are stated in terms of dry pigment. Each formula shall contain the specified raw materials which shall be proportioned to give the compositions in percentages by weight or parts by weight, as shown in the subsections that follow.

116–2.202B Formula No. A-1-57—Red Lead Shop Coat for Steel

Metallic lead paste shall be supplied by the paint manufacturer as a part of this formula to be added to the paint at the time of use at the rate of three (3) pounds of paste added to one (*i*) gallon of paint. A unit shall consist of a one gallon container of paint and a separate container of three (3) pounds of paste or a five gallon container of paint and a separate container of 15 pounds of paste.

Red lead (dry pigment)	80.2%
Raw linseed oil	18.9%
Liquid drier	0.9%
Total	100.0%
Weight per gallon (minimum)	26.7 pounds
Drying time (for test purposes)	24 hours
Grind (minimum)	3.0
Viscosity at 70° F.	85±3 K.U.

Test Requirements: Prior to manufacture.

Viscosity Adjustment: Volatile thinner (turpentine or mineral spirits) will be added at the factory to attain the specified viscosity.

116–2.02C Formula No. A-2-57—Shop Coat for Steel (Alkyd-Linseed Vehicle)

Zinc chromate (dry pigment)	36.5 parts
Red iron oxide (dry pigment)	9.8 parts
Magnesium silicate (dry pigment)	4.8 parts
Silica (dry pigment)	4.2 parts
Alkyd vehicle	20.8 parts
Raw linseed oil	14.8 parts
24% Lead naphthenate drier	0.6 parts
6% Cobalt naphthenate drier	0.3 parts
Soya lecithin	0.2 parts
Aromatic petroleum thinner	5.3 parts
Mineral spirits (approximately)	2.7 parts
Weight per gallon (minimum)	12.70 pounds
Grind (minimum)	3.0
Drying time (for test purposes)	18 hours
Viscosity at 70° F.	80±3 K.U.
Hiding power (maximum scale reading)	17
Nonvolatile content (minimum)	85.0%

Test Requirements: Prior to manufacture.

Viscosity Adjustment: Mineral spirits to be adjusted at the time of manufacture to achieve the specified viscosity.

116—2.02D Formule No. A-3-57—Red Lead Sealing Paste

Red lead (dry pigment)	84.0%
Metallic lead paste	8.0%
Raw linseed oil	7.9%
Liquid drier	0.1%
Weight per gallon (minimum)	41.0 pounds
Drying time—surface dry for recoating	24 hours

This material shall be ground to a smooth uniform paste of putty-like consistency. Additional linseed oil may be added at the time of use to reduce the paste to workable consistency for spatula or brush. This material hardens in storage and should be used within 15 days of the date of manufacturing.

116—2.02E Formula A-4-59—Phenolic-Red Lead Primer

This primer shall meet the requirements of Federal Specification TT-P-86b Type IV Paint: Red-Lead Base, Ready Mixed. The viscosity of the finished paint shall be 83±3 K.U. at 70° F.

116—2.02F Formula A-5-61—Vinyl Pretreatment

The primer shall meet the requirements of Federal Specification MIL-C-15328B Primer Pretreatment (Formula 117 for Metals).

116—2.02G Formula A-6-61—Zinc Dust Zinc Oxide Primer

The primer shall meet the requirements of Federal Specification TT-P-641b Primer-Paint: Zinc Dust-Zinc Oxide Type II or Type III, except that the viscosity shall be 85±5 K.U. at 70° F.

116—2.02H Formula B-1-57—First Field Coat for Steel (Red Lead)

Metallic lead paste will be supplied by the manufacturer as a part of this formula to be added to the paint at the time of use at the rate of three (3) pounds of paste added to one (1) gallon of paint. A unit shall consist of a one-gallon container of paint and a separate container of 3 pounds of paste, or a 5-gallon container of paint and a separate container of 15 pounds of paste.

Red lead (dry pigment)	76.8%
Lampblack (dry pigment)	0.7%
Raw linseed oil	21.5%
Liquid drier	1.0%
Total	100.0%
Weight per gallon (minimum)	24.5 pounds
Viscosity at 70° F.	85±3 K.U.
Drying time (for test purposes)	24 hours
Grind (minimum)	3.0

Test Requirements: Prior to manufacture.

Viscosity Adjustment: Volatile thinner (turpentine or mineral spirits) may be added at the factory to attain the desired viscosity.

116—2.02I Formula B-2-57—First Field Coat for Steel (Alkyd Linseed Vehicle)

Zinc chromate (dry pigment)	36.5	parts
Yellow iron oxide (dry pigment)	9.8	parts
Magnesium silicate (dry pigment)	4.8	parts
Silica (dry pigment)	4.2	parts
Alkyd vehicle	20.8	parts
Raw linseed oil	14.8	parts
24% Lead naphthenate drier	0.6	parts
6% Cobalt naphthenate drier	0.3	parts
Soya lecithin	0.2	parts
Aromatic petroleum thinner	5.3	parts
Mineral spirits (approximate)	2.7	parts
Weight per gallon (minimum)	12.70	pounds
Grind (minimum)	3.0	
Drying time (for test purposes)	18	hours
Viscosity at 70° F.	80±3 K.U.	
Hiding power (maximum scale reading)	17	
Nonvolatile content (minimum)	85.0%	

Test Requirements: Prior to manufacture.

Viscosity Adjustment: Mineral spirits to be adjusted at the time of manufacture to achieve the required viscosity.

116—2.02J Formula B-4-59—Phenolic First Field Coat for Steel

The phenolic first field coat for steel shall meet the requirements of Federal Specification TT-P-86b, Type IV—Paint: Red-Lead-Base Ready Mixed—except that 0.7% of the red lead content shall be replaced with lampblack to give a resultant brown color. The viscosity of the finished paint shall be 83±3 K.U.

116—2.02K Formula C-1-57—Black Second Field Coat for Steel

Red lead (dry pigment)	32.5	parts
Lampblack (dry pigment)	5.5	parts
Iron blue (dry pigment)	2.8	parts
Raw linseed oil	58.0	parts
Liquid drier	1.2	parts
Weight per gallon (minimum)	11.4	pounds
Grind (minimum)	3.0	
Drying time (for test purposes only)	24	hours

Test Requirements: Prior to manufacture.

116—2.02L Formula C-2-57—Gray Second Field Coat for Steel (Linseed Vehicle)

Basic carbonate of white lead (dry pigment)	62.2	parts
Lampblack (dry pigment)	0.1	parts
Ochre (dry pigment)	0.2	parts
Ray linseed oil	13.9	parts
Z4 bodied linseed oil	13.8	parts
Varnish (TT-V-119)	2.7	parts
Liquid drier	0.6	parts
Mineral spirits	6.5	parts
Weight per gallon (minimum)	16.2	pounds
Grind (minimum)	3.0	
Viscosity at 70° F.	85±3 K.U.	
Nonvolatile content (minimum)	91.0%	

Color: The amounts of lampblack and ochre are approximate and must be adjusted to match a standard color sample for Formula No. C-2-57.

Test Requirements: Prior to manufacture.

Viscosity Adjustment: Mineral spirits content will be adjusted at the factory to meet the specified viscosity.

116—2.02M Formula C-3-57—Gray Second Field Coat for Steel (Alkyd Vehicle)

Titanium-calcium (dry pigment)	31.9	parts
Ochre (dry pigment)	2.6	parts
Lampblack (dry pigment)	0.3	parts
Alkyd vehicle	52.5	parts
Raw linseed oil	2.1	parts
Anti-skinning agent	0.2	parts
24% Lead naphthenate drier	0.6	parts
6% Cobalt naphthenate drier	0.3	parts
6% Manganese naphthenate drier	0.1	parts
Mineral spirits	9.4	parts
Weight per gallon (minimum)	10.1	pounds
Viscosity at 70° F.	85±3 K.U.	
Grind (minimum)	3.0	
Nonvolatile content (minimum)	74.0%	

Dry color match: The amounts of lampblack and ochre are approximate and must be adjusted to match a standard color sample for Formula C-3-57 when dry.

Test Requirements: Prior to manufacture.

Viscosity Adjustment: Mineral spirits content will be adjusted at the factory to meet the specified viscosity.

116—2.02N Formula C-4-57—Green Second Field Coat for Steel (Alkyd Vehicle)

Titanium-calcium (dry pigment)	19.7	parts
Zinc oxide (dry pigment)	6.5	parts

Chrome yellow (dry pigment)	1.8	parts
Chrome green oxide (dry pigment)	11.2	parts
Alkyd vehicle	47.0	parts
Raw linseed oil	2.0	parts
Anti-skinning agent	0.2	parts
24% Lead naphthenate drier	0.5	parts
6% Cobalt naphthenate drier	0.2	parts
6% Manganese naphthenate drier	0.1	parts
Mineral spirits	10.8	parts

Dry color match: The amounts of chrome yellow and chrome green oxide are approximate and must be adjusted to match a standard color sample of Formula No. C-4-57 when dry.

Test Requirements: Prior to manufacture.

Viscosity Adjustment: Mineral spirits content will be adjusted at the factory to achieve the specified viscosity.

Weight per gallon (minimum)	10.3 pounds
Viscosity at 70° F.	85±3 K.U.
Grind (minimum)	3.0
Nonvolatile content (minimum)	74.5%

116—2.02O Formula C-5-57—Green Second Field Coat for Steel (Linseed Vehicle)

Basic carbonate of white lead (dry pigment)	42.6	parts
Zinc oxide (dry pigment)	10.5	parts
Chrome green oxide (dry pigment)	6.4	parts
Chrome yellow	1.0	parts
Z4 bodied linseed oil	13.3	parts
Varnish (TT-V-119)	2.9	parts
Raw linseed oil	13.3	parts
Liquid drier	0.7	parts
Mineral spirits	9.3	parts
Weight per gallon (minimum)	14.6	pounds
Viscosity at 70° F.	85±3 K.U.	
Drying time (for test purposes)	24	hours
Nonvolatile content (minimum)	89.0%	

Dry color match: The chrome green oxide and the chrome yellow content are approximate and must be adjusted to match the color of a standard color sample of Formula No. C-5-57.

Test Requirements: Prior to manufacture.

Viscosity Adjustment: Mineral spirits content will be adjusted at the factory to achieve the desired viscosity.

116—2.02P Formula C-6-59—Green Phenolic Finish Coat for Steel

Zinc chromate (dry pigment)	13.8	parts
Chrome green oxide (dry pigment)	16.1	parts
Titanium dioxide (dry pigment)	16.7	parts
Yellow iron oxide (dry pigment)	1.3	parts
Fibrous magnesium silicate (dry pigment)	5.0	parts
Aluminum stearate (dry pigment)	0.2	parts
Varnish (TT-V-119)	22.1	parts
Raw linseed oil	21.4	parts
Driers	1.0	parts
Anti-skinning agent	0.1	parts
Mineral spirits	2.3	parts
Weight per gallon (minimum)	12.5	pounds
Viscosity at 70° F.	85±3 K.U.	
Grind (minimum)	6	
Set to touch	4	hours
Dry hard	18	hours

Test Requirement: Prior to manufacture.

Viscosity Adjustment: Mineral spirits content to be adjusted at the factory to achieve the specified viscosity.

The proportions of tinting pigments may be varied to achieve the desired color. The color of the paint when dry must match the color of a standard C-5 color chip. Additional tinting pigments may be required.

116—2.02Q Formula D-4-57—Black Enamel

The enamel shall meet the requirements of Federal TT-E-529 Black Enamel, Synthetic, Semi-Gloss.

Test Requirements: This enamel will be sampled and tested in the ready-mixed form. No factory inspection will be required.

116—2.02R Formula D-5-57—White Guard Rail Paint (Alkyd Vehicle)

Titanium dioxide (dry pigment)	28.1	parts
Zinc oxide (dry pigment)	10.9	parts
Fibrous magnesium silicate (dry pigment)	4.3	parts
Aluminum stearate (dry pigment)	0.5	parts
Alkyd vehicle	37.0	parts
24% Lead naphthenate drier	0.4	parts
6% Cobalt naphthenate drier	0.2	parts
6% Manganese naphthenate drier	0.2	parts
Anti-skinning agent	0.2	parts
Mineral spirits	18.2	parts
Weight per gallon (minimum)	11.0	pounds
Viscosity at 70° F.	85±3 K.U.	
Nonvolatile content (minimum)	70.2%	
Grind (minimum)	4	
Hiding power (maximum scale reading)	30	
Set to touch	4	hours
Dry hard	18	hours

Test Requirements: Prior to manufacture.

Viscosity Adjustment: Mineral spirits content will be adjusted at the factory to achieve the specified viscosity.

This formula is not intended for use on unpainted wood.

116—2.02S Formula D-6-57—White Guard Rail Paint (Linseed Vehicle)

Basic carbonate of white lead (dry pigment)	19.1	parts
Zinc oxide (dry pigment)	15.4	parts
Titanium dioxide (dry pigment)	9.3	parts
Fibrous magnesium silicate (dry pigment)	9.0	parts
Diatomaceous silica (dry pigment)	8.9	parts
Raw linseed oil	23.2	parts
Z4 bodied linseed oil	7.6	parts
Mineral spirits	6.4	parts
Liquid drier	1.1	parts
Weight per gallon (minimum)	14.0	pounds
Drying time (for test purposes only)	18	hours
Viscosity at 70° F.	85±3 K.U.	
Hiding power (maximum scale reading)	30	
Grind (minimum)	4	

Test Requirements: Prior to manufacture.

Primer: This formula is intended for use on previously painted surfaces. When applied to unpainted wood, turpentine shall be added as required by the character of the surface in the proportion of not to exceed one (1) quart per gallon of the above paint.

Viscosity Adjustment: Mineral spirits content will be adjusted at the factory to give the specified viscosity.

116—2.02T Formula D-1-57—Aluminum Paint

Aluminum paste	2	pounds
Varnish (TT-V-119)	1.0	gallons

Aluminum paint shall be mixed on the work, and only enough for one day shall be mixed at a time. The weighed amount of paste shall be placed in a suitable mixing container and the measured volume of vehicle then poured over it. The paste shall be incorporated by vigorous stirring with a paddle.

Test Requirements: Prior to mixing.

116—2.02U Formula No. E-1-57—White for Wood Structures

The material shall conform to Federal TT-P-102, Class A, except that the viscosity shall be 85±3 K.U. at 70° F.

Test Requirements: This paint will be sampled and tested in the ready-mixed form.

Primer: Turpentine may be added to the above paint in quantities not to exceed 1½ pints per gallon of paint for use as a primer.

116–2.02V Formula E-2-62—Primer for Wood

The primers shall be a ready mixed priming paint for use over unpainted wood surfaces. It shall meet the requirements of Federal Specification TT-P-25a Primer, Exterior, except that the viscosity shall be 85±3 K.U. at 70° F.

Test Requirements: This paint shall be sampled and tested in the ready mixed form.

116–2.02W Formula F-3-57—Orange Equipment Enamel

The enamel shall meet the requirements for Enamel, Gloss, Synthetic, Federal TT-E-489. The enamel when dry shall match a standard color sample for Formula F-3, Orange Equipment Enamel. C.P. chrome orange pigments shall be blended to obtain the proper color and the use of other orange pigments will not be allowed.

Test Requirements: The enamel will be sampled and tested in the ready-mixed form. No factory inspection will be required. A one-pint sample of the enamel must be submitted to the Materials Laboratory for approval prior to use.

116–2.02X Formula H-1-57—Primer for Concrete

Titanium calcium pigment	24.7	parts
Fibrous magnesium silicate	6.8	parts
Silica	6.8	parts
Varnish (TT-V-119)	52.3	parts
Mineral spirits	9.4	parts
Weight per gallon (minimum)	9.8	pounds
Drying time (for testing purposes only)	18	hours
Viscosity at 70° F.	70±5	K.U.

Consistency: The paint shall not thicken after manufacture to an extent sufficient to impair its brushing qualities.

Test Requirements: Prior to manufacture.

116–2.02Y White Masonry Paint for Precast Curbs

Titanium dioxide (dry pigment)	11.9	parts
Calcium carbonate (dry pigment)	25.6	parts
Mica (dry pigment)	7.4	parts
Diatomaceous silica (dry pigment)	7.0	parts
Thixin (body agent)	0.5	parts
Pliolite S5-A	8.0	parts
Chlorinated paraffin 40%	4.0	parts
Chlorinated paraffin 70%	4.0	parts
Aromatic brushing thinner	31.6	parts
Viscosity at 70° F.	95±5	K.U.
Weight per gallon (minimum)	12.1	pounds
Drying time (for test purposes only)	18	hours

Test Requirement: Prior to manufacture.

116–2.02Z Formulas J-1-57, J-2-57, J-3-57—Enamels for Signs

Formulas J-1-57 white, J-2-57 yellow, and J-3-57 black shall be water-resisting enamels made with synthetic gums. They shall be suitable for brush application to vertical metal surfaces and shall have the following characteristics:

	J-1-57	*J-2-57*	*J-3-57*
Coarse particles and skins retained on No. 325 sieve, not over	0.50%	0.50%	0.50%
Non-volatile matter, not less than	85 %	80 %	50 %
Set to touch at room temperature, not over	5 hrs.	5 hrs.	5 hrs.
Dry hard at room temperature, not over	24 hrs.	24 hrs.	24 hrs.
Toughness, Kauri reduction test at 75° F., not less than	150 %	150 %	120 %
Hiding power, square feet per gallon, by Pfund cryptometer, Model E, black plate, not less than	300	450	

Water Resistance: The dried films must withstand cold water for 18 hours and boiling water for 15 minutes without whitening, dulling or change in color.

Working Properties: The enamels shall have good brushing, flowing, covering and leveling properties and must not cake in the container. When applied to vertical steel surfaces they shall dry without running, streaking or sagging.

The properties enumerated above shall be determined in accordance with Federal TT-P-141b.

Colors: Formula J-1-57 shall be pure white equal in brightness to that obtainable with rutile titanium-calcium pigment (ASTM Designation D 476-48). Formula J-2-57 shall match a standard color sample for "Standard Interstate Yellow." Formula J-3-57 shall be jet black and hide completely in one coat.

116–2.02AA Formula J-4-57—Brilliant Green Sign Enamel

This formula shall be a ready-mixed exterior paint meeting the requirements of Federal TT-P-71b, except that a blend of titanium dioxide and tinting pigments shall be used instead of chrome green oxide. The paint shall match the color of a standard brilliant green sign enamel. The paint, when reduced with an equal weight of linseed oil, shall have a hiding power of not less than 750 square feet per gallon when measured on the Pfund Cryptometer, Model E, white plate, viewed in a light of approximately 50-foot candle intensity.

116–2.02AB Formula J-5-57—Green Stain for Wood Posts and Poles

Formula J-5-57, Green Stain for Wood Posts and Poles, shall be a "permanent" green color meeting the requirements of Federal TT-S-706. The green color shall be obtained by the use of Pthalocyanine green, chrome yellow, lampblack, and titanium dioxide with zinc oxide and calcium carbonate to complete the required pigmentation. The stain when dry shall match a standard color sample of J-4-57 green sign paint, "Standard Interstate Green." The stain will be sampled and tested in ready-mixed form.

116–2.02AC Traffic Signal Yellow Enamel

Traffic signal yellow enamel shall meet the provision of Federal Specification TT-E-489c—Enamel, Alkyd, Gloss—and shall match the color of "Standard Interstate Yellow."

116–2.03 INSPECTION REQUIREMENTS

116–2.03A General

Paints are classified into those requiring sampling and testing of raw materials prior to manufacture of the paint with inspection during manufacture, and paints which will be accepted on tests of the completely manufactured product. The type of test procedure required is indicated with the requirements for each formula under the heading "Test Requirements."

When the expression "prior to manfucture" is used in connection with a given formula, the manufacturer shall notify the Engineer when sufficient quantities of the necessary raw materials are on hand at the factory. The Engineer will then sample and seal each lot of material and the lots so sealed shall be reserved for use until the Engineer notifies the manufacturer of the acceptance of the lots sampled.

The manufacturer shall notify the Engineer of the date on which manufacture will be started and the Engineer shall have the right to inspect all details of the manufacturing process and to assure himself that none but accepted lots of raw materials are used. The term "raw material" shall apply to each separate ingredient given in the formula except that varnish and single pigments ground to paste form in the specified vehicle shall be considered as "raw materials."

Quantities of 20 gallons or less of the above formulas will be accepted without inspection upon the manufacturer's notarized certificate. This certificate shall contain a statement by the manufacturer to the effect that the material meets the specified formula specification, and shall include a list of materials and quantities used. One copy of the certificate shall accompany the paint when shipped and one copy with a sample of the paint shall be sent to the City Matrials Laboratory. The paint may be used at once without further release from the Materials Laboratory.

116–2.03B Process of Manufacture

The following process of manufacture shall be used for each paint except aluminum paint. Pigments shall be thoroughly ground in appropriate proportions of the specified vehicle to form a paste meeting the requirements set forth in Section 116–2.03H under "Fineness of Grinding." The grinding shall be done in a mill of a type approved by the Engineer. The use of the "colloid" type of mill will not be approved. Weighed quantities of the paste and weighed or measured quantities of the vehicles shall then be thoroughly mixed and strained if necessary to form a paint free from skins, lumps and foreign materials.

116–2.03C Viscosity Adjustment

The volatile thinner content of the paint shall be adjusted at the factory to meet the required viscosity, but in no case shall the resultant weight per gallon and nonvolatile content of the paint be below that specified in the formula.

116–2.03D Weight Variations

The average weight per gallon of the paint in any lot shall not be less than that stated in the formula. The paint in any container shall not vary more than two (2) per cent from the specified weight per gallon.

116–2.03E Drying Time and Quantity of Drier

The paint shall dry within the length of time stated in each formula but shall not contain sufficient quantities of drier to cause the paint to dry to a nonuniform or nonelastic film. The manufacturer will be permitted to vary the quantity of drier given in the formula sufficiently to accomplish the above results.

116–2.03F Working Properties

The paint shall contain no caked material that cannot be readily broken up by stirring with a paddle. When applied to a clean vertical surface the paint shall dry without running, streaking or sagging.

116–2.03G Storage Properties

Paint manufactured under these specifications shall show no skin over the surface after 48 hours in a partially filled container, when tested as outlined in Federal Test Method Standard No. 141, Method 4141. A slight amount of skin or gel formation where the surface of the paint meets the side of the container may be disregarded. Variable percentages of "anti-skinning agents" are shown in those formulas set forth above that are susceptible to undesirable skin formation. The manufacturer will be allowed to vary the amount of "anti-skinning agent" given in the formulas provided the above results are accomplished and provided the paint does not dry to a nonuniform or nonelastic film.

116–2.03H Fineness of Grinding

The paint shall be ground so that all particles of pigment will be dispersed and be coated with vehicle, and the residue on a 325 sieve will not exceed one (1) per cent by weight of the pigment when tested in accordance with ASTM Designation D 185, Standard Method of Test for Coarse Particles in Pigment, Pastes and Paints. Those paints made under formulas specifying special requirements for fineness of grind shall likewise be tested for fineness of grind as described in Federal Test Method Standard No. 141, Method 4411.

116–2.03I Standard Colors

When the paint is required to match a standard color the manufacturer may obtain a sample of the required color without cost upon application to the Engineer.

116–2.03J Containers

Each container shall be substantially filled with paint and sealed airtight. Each container shall be filled with the amount of paint required to yield the specified quantity when measured at 70°F.

All paint shall be shipped in new suitable containers having a capacity of not greater than five (5) gallons. Each container shall be marked with a suitable number to identify the particular batch from which it was filled.

116–2.03K Test Methods

As set forth in Section 116–2.02A, all paints shall meet the special requirements set forth for each formula. The test methods used to check those special requirements shall be as specified below:

Weight per gallon: Federal Test Method Standard No. 141, Method 4184.

Set to touch: Federal Test Method Standard No. 141, Method 4061.

Dry Hard (Varnishes, Lacquers and Enamels): Federal Test Method Standard No. 141, Method 4061.

Dry Hard (Oil Base Paints): Federal Test Method Standard No. 141, Method 4062.

Viscosity (Krebs-Stormer Viscosimeter): Federal Test Method Standard No. 141, Method 4281.

Fineness of Grind: Federal Test Method Standard No. 141, Method 4411.

Non-Volatile Content: Federal Test Method Standard No. 141, Method 4041.

Hiding Power: The hiding power of the finished paint shall be such that when tested with the Pfund Crytometer, Model E, Black Plate, Wedge Constant 0.0035 inch, and viewed in light of approximately 50-foot candle intensity, the specified scale readings are not exceeded.

116–3 CONSTRUCTION DETAILS

116–3.01 PAINTING NEW STEEL STRUCTURES

116–3.01A Scope of Work

The painting of metal structures shall include, unless otherwise provided in the contract, the proper preparation of all metal surfaces, the application, protection and drying of the paint coatings, the protection of pedestrian, vehicular or other traffic upon or underneath any structure from contact with fresh paint, the protection of all portions of the structure (superstructure and substructure) against disfigurement by spatters, splashes and smirches of paint or of paint materials, and the supplying of all tools, tackles, scaffolding, labor, workmanship and materials necessary for the entire work.

116–3.01B Number of Coats

All new structural steel work, unless otherwise especially provided upon the plans or in the contract, shall be painted three coats of paint. The first coat shall be applied before erection and immediately after the steel has been cleaned by sand-blasting. The second and third coats shall be applied after all erection is complete, except that immediately following the field riveting of the members, the heads of field rivets and all abrasions of the shop coat due to handling at the shop, shipment, erection, etc., and all field erection marks shall be thoroughly covered with one coat of shop paint and permitted to become thoroughly dry before the first field coat is applied.

116–3.01C Colors of Coats

The color of each succeeding coat shall be sufficiently different from that previously applied to readily permit the discovery of an incomplete application of the paint coat. The colors of the coats shall be as specified on the plans or as directed by the Engineer.

116–3.01D Weather Conditions

Paint shall be applied only when the air and metal temperatures are at or above forty degrees Fahrenheit (40° F.). It shall not be applied upon damp surfaces, nor shall it be applied when the air is misty, or otherwise unsatisfactory for the paint to dry.

Materials painted under cover in damp or cold weather shall remain under cover until dry or until weather conditions permit its exposure in the open. Painting in open yards or upon erected structures shall not be done when the metal is of a sufficiently high temperature to cause the paint to blister and produce a porous paint film.

116–3.01E Application

All paint shall be applied according to the best workmanship standards with paint brushes, unless other methods are specifically authorized in the special provisions or by the Engineer. On those surfaces which are inaccessible for applying paint with brushes, suitable daubers or spraying equipment shall be used.

When spraying of paint is permitted, the equipment used shall be capable of satisfactorily applying the mixed paint strictly in accordance with the paint formulas in these specifications, without the addition of volatile thinners in excess of that specified in the formula.

Adequate means shall be installed by the Contractor during painting operations for the protection if the structure and traffic from windblown or dripping paint. Where traffic cannot be properly safeguarded and interruption of traffic periodically for passage through the painting area is required, the Contractor shall provide the watchman and flagmen necessary for control of traffic.

116–3.01F Removal of Improper Paint

All metal not properly cleaned before painting, or metal coated with impure or improper paint shall be thoroughly cleaned and repainted properly.

116–3.01G Thinning

Paint shall be shipped from the factory at brushing consistency and the use of additional thinner will not be permitted, unless authorized in writing by the Engineer.

116–3.01H Shop Cleaning

All surfaces of metal to be painted shall be thoroughly cleaned of rust, loose mill scale, dirt, oil, grease and other foreign substances. The removal of rust, scale and dirt shall be done by sand-blasting as specified in Section 112–3.14. Oil and grease may be removed by the use of suitable solvents. Bristle and wood fibre brushes or air blast may be used for removing loose dust.

116–3.01I Shop Painting

After the structural steel has been fabricated and thoroughly cleaned as specified above, all surfaces shall be painted immediately with one coat of the paint specified on the plans, except that on those surfaces which will be in contact in the finished structure, the shop coat of paint shall be only heavy enough, but not less than one mill (.001 inch) in dry thickness, to prevent the metal from rusting until such time as the structural steel will be erected and painted in the field.

The paint used for covering field contact surfaces shall be the same as specified for the shop coat. The addition of volatile thinner in excess of the amount allowed by the formulas will not be permitted. The light application of paint shall be confined to those surfaces which will be in contact after erection. Other surfaces, which will not be in contact but may have received a light application of paint, shall be touched up with a normally thick coating of shop paint, which shall be allowed to become thoroughly dry before the first field coat of paint is applied.

Structural steel shall not be loaded for shipment until after the shop coat of paint has thoroughly dried. No painting shall be done after steel has been loaded for shipment.

116–3.01J Erection Marks

Erection marks for the field identification of members shall be painted upon previously painted surfaces.

116–3.01K Machine Finished Surfaces

Machine finished surfaces, including abutting chord splices, column splices and column bases, shall be covered with red lead paint, Formula A-1-57, as soon as practicable after acceptance and before removal from the shop.

Surfaces of iron and steel castings, milled for the purpose of removing scales, scabs, fins, blisters or other surface deformations, shall also generally be covered with red lead paint.

116–3.01L Field Cleaning

When the erection work is complete, including all riveting, straightening of bent material, etc., all metal surfaces shall be thoroughly cleaned of rust, scale, dirt, oil, or grease and all other foreign substances. The removal of rust, scale and dirt shall generally be done by the use of metal brushes, scrapers, chisels, hammers, sand blasting, or other effective means, as directed by the Engineer. Oil and grease may be removed by the use of gasoline or benzine. Bristle or wood fibre brushes may be used for removing loose dust.

Pressure flushing as specified in Section 116–3.02C may be required if the structure is covered with dirt deposits or residue from concreting work.

Damage to the shop coat caused by shipping or by handling in erection, and rivets and welds placed during erection shall normally be cleaned by thorough wire brushing prior to painting. All dirt, oil, grease and foreign materials shall be removed from the structure by use of solvents, scrapers, brushes or pressure flushing prior to the application of each coat of paint, as may be directed by the Engineer.

116–3.01M Field Painting

As soon as the field cleaning is done to the satisfaction of the Engineer, the heads of field rivets and bolts, any surfaces from which the shop coat of paint has been worn off or which is otherwise defective, and all shipping and erection marks shall be thoroughly covered with one coat of the same paint as used for the shop coat. This paint shall be allowed to become thoroughly dry before the first field coat is applied.

When the paint applied for "touching up" rivet heads and abraded surfaces has become thoroughly dry, the first and second field coats may be applied. In no case shall a succeeding coat be applied until the previous coat has dried throughout the full thickness of the paint film.

All small cracks and cavities that have not become sealed in a watertight manner by the first field coat shall be filled with red lead sealing paste applied by brush or spatula before the second field coat is applied.

116–3.02 REPAINTING EXISTING STEEL STRUCTURES

116–3.02A Scope of Work

Unless otherwise provided, maintenance painting shall consist of the removal of the rust, scale, dead paint, dirt, grease or other foreign matter from the metal parts or portions of existing bridge structures and the application of paint thereto.

All metal surfaces not in close contact with other metal surfaces or with wooden floor or truss members, concrete, stone masonry, etc., shall be considered as exposed to deterioration by rusting and shall be thoroughly cleaned and painted. The number of coats shall be as shown on the plans or as specified in the special provisions.

116–3.02B Number of Coats

Unless otherwise provided, metal after being cleaned to the bare substrate shall be painted with three coats of paint.

116–3.02C Cleaning and Painting

The requirements and methods for cleaning and repainting existing steel structures shall be the same as specified for field cleaning and painting of new structures unless otherwise specified on the plans or in the special provisions.

Rust removal shall be by means of sand blasting. The spots that are sand blasted shall be blasted to a uniform metallic grey appearance with only small areas of stain and grey mill scale permitted. There shall be no evidence of red or yellow rust at the edges of the clean area and the sound paint edges shall be feathered to give a smooth surface.

Pressure flushing, when called for, shall be by means of water or water and detergents. The pumping system shall operate at a minimum nozzle pressure of 150 pounds per square inch. The nozzle shall have an orifice of not less than 1¼-inch diameter and shall be so designed as to give a high pressure stream of water rather than spray. The nozzle shall be operated not more than six feet from the surface being cleaned.

All cracks and crevices in the cleaned areas that are not sealed by the spot coat of paint shall be sealed by use of red lead sealing paste applied by brush or spatula before the finish coat of paint is applied.

Whenever roadway or sidewalk planking is laid too closely in contact with the metal to permit free access for proper cleaning and painting, the planks shall either be removed or shall be cut to provide at least a one (1) inch clearance for that purpose. The removal or the cutting of planks shall be done as directed by the Engineer. All planks removed shall be satisfactorily replaced and if broken or otherwise injured to an extent rendering them unfit for use, shall be renewed at the expense of the Contractor.

116–3.03 PAINTING TIMBER STRUCTURES

116–3.03A Number of Coats

Unless otherwise specified, rails and rail posts on timber bridges shall be given two coats of paint. The color shall be as shown on the plans, specified in the special provisions, or as designated by the Engineer. Unless otherwise indicated, the wheel guard shall be painted only on the top edge and roadway side.

All timber work of structures, fences, stairways and other timber appurtenances above ground elevation shall be given three (3) coats of paint of the color specified or as designated by the Engineer, unless otherwise shown on the plans or specified in the special provisions.

116–3.03B Application

All wood surfaces which are to be painted must be thoroughly dry and free from oil or dirt. All paint for wood shall be applied with brushes and shall be evenly spread and thoroughly worked into all seasoning cracks, corners and recesses. In no case shall the succeeding coat be applied until the previous coat has dried throughout the full thickness of the paint film. In applying aluminum paint with a brush, care shall be taken that all final strokes are made in the same direction in order that the particles of powder may "leaf" uniformly in the paint film.

Paint shall not be applied on creosoted surfaces. Painted surfaces stained from the presence of creosote shall be given one or more coats of approved shellac and the surfaces repainted.

116–3.03C Painting Treated Timber

Timber treated with creosote or oil-borne pentachlorophenol preservatives will not ordinarily be painted.

Timber treated with water-borne preservatives must be clean and dry and shall have the moisture content reduced to the 18% or less specified in Section 115–2.02B of Standard Specifications. Visible salt crystals on the surface of the wood must be removed by washing and brushing and the moisture content again reduced to specification level. Timbers in storage awaiting painting must be under cover and properly stacked with spreaders to assure circulation of air.

The paint schedule shall consist of one full coat of primer, Formula E-2-62 and two full coats of Formula D-5-57 applied to all surfaces. Each coat of paint shall be thoroughly dry before the next coat is applied.

116–3.04 PAINTING BEAM GUARD RAIL

116–3.04A Preparation and Preliminary Coats

Cleaning and types of paint applied to beam guard rail shall be as specified in Section 116–3.04C and Section 36–3.02. All but the final field coat of paint may be applied in the shop if the Contractor so elects. Guard rail posts shall not be painted.

All punching, shearing, riveting, rolling and other operations required for fabrication will be completed prior to cleaning and painting. Paints may be applied by brush or spray at the option of the Contractor; however, the requirements for the number of coats, film thickness per coat and total film thickness must be met regardless of the method of application. Forced drying of all paint coats will be permitted provided the dry film is free from blisters, bubbles and other damage and is equal in quality to an air dried film.

116–3.04B Spotting and Final Field Coat

Depending upon the option chosen by the Contractor as set forth in Section 116–3.04C, the necessary coat or coats of paint shall be applied by brush or spray after all erection has been completed. After erection and prior to application of the final field coat all abrasion damage and erection damage shall be spotted to replace lost coats of paint. Areas scarred to the metal surface or left unpainted until after erection shall be cleaned and spotted with the required number of coats of each paint to bring all painted surfaces of the rail up to the same number of coats. Formula A-6-61—Zinc Rich Primer—may be used to spot in place of the Formula A-5-61 and A-2-57 regardless of the original system applied to the rail.

After the spots have dried, the surface dirt shall be removed by brushing, wiping or pressure flushing as specified by the Engineer at the job site, dried and given a full coat of Formula D-5-57—Alkyd Guard Rail Paint.

116–3.04C Painting Galvanized Rail

All galvanized surfaces to be painted shall have all oil and grease removed by solvents. Remaining deposits may be removed by any required method which does not damage the galvanizing.

The clean and dry rail may be painted according to either of the following schedules, at the option of the Contractor:

Schedule A: First coat—Formula A-5-61.
Second coat—Formula A-2-57.
Third coat: Shop Finish Coat D-5-57.
Fourth coat—Field Finish Coat D-5-57.

Schedule B: First coat—Formula A-6-61.
Second coat—Shop Finish Coat D-5-57.
Third coat—Field Finish Coat D-5-5-7.

The primer and shop finish coats may be force dried if desired. Each coat must be dry before application of the next coat and all coats applied in the shop must be dried hard prior to shipment of the rail.

116–3.05 PAINTING STEEL RAIL

Steel rail and fittings shall have all oil and grease removed by use of solvents. Corrosion products and other foreign materials shall be removed by sand blasting or a pickling process. Power wire brushing may be permitted at the option of the Engineer.

As soon as possible after cleaning and drying and in any event, during the same working day on which cleaning takes place, the surface shall be primed with a full coat of Formula A-2-57—Shop Coat for Steel—followed by two full coats of Formula D-5-57—Guard Rail Paint.

116–3.06 PAINTING MISCELLANEOUS GALVANIZED SURFACES

The general procedures as outlined in Subsection 116–3.04C shall be followed with regard to surface preparation, and painting galvanized surfaces.

116–4 PAINT FILM THICKNESS

116–4.01 GENERAL

Formula A-5-61—Vinyl Pretreatment—has such rapid solvent release that wet film thickness readings are

difficult to obtain. However, a full wet coat free from runs and sags yields proper film thickness. All other coatings, regardless of the method of application, shall be applied at a minimum wet thickness of 2.0 mils per coat.

The dry film thickness of Formula A-5-61—Vinyl Pretreatment—shall be 0.4-0.7 mils. All other coatings, regardless of the method of application, shall yield a minimum dry film thickness of 1.5 mils per coat.

The minimum total dry film thickness for the specified paint system on any surface shall be the sum of the individual dry film thicknesses of the individual coats. In the event that the minimum total dry film thickness requirement is not met, the Contractor shall apply an additional full coat of finish paint at his expense.

Wet film thickness shall be measured by a suitable gauge immediately after the paint is applied. Dry film thickness measurements shall be made by use of a suitable gauge after the coating has become thoroughly dry and hard.

116–5 MEASUREMENT AND PAYMENT

116–5.01 GENERAL

No separate payment item will be included in the proposal for painting except as otherwise provided hereinafter.

116–5.02 PAINTING NEW STEEL STRUCTURES

Painting new steel structures shall be considered as incidental to the construction and all costs in connection with cleaning and painting the metal surfaces as specified herein shall be included in the various unit contract prices for the materials specified to be painted.

116–5.03 REPAINTING EXISTING STEEL STRUCTURES

Payment for repainting existing steel structures will be made as provided in the special provisions.

116–5.04 PAINTING TIMBER STRUCTURES

Painting timber structures shall be considered as incidental to the construction and all costs in connection with painting the timber surfaces as specified herein shall be included in the unit contract price per thousand feet board measure (MBM) for "Timber and Lumber."

116–5.05 PAINTING GUARD RAILS

Painting guard rails shall be considered as incidental to the contruction and all costs in connection with painting the guard rails as specified herein shall be included in the unit contract price per linear foot for guard rail of the type specified.

Section 117—Bridge Railings

117–1 DESCRIPTION

Concrete handrailing shall consist of that portion of the railing above the roadway curb or above the sidewalk curb and shall include the rail web, cap and posts. Timber railing shall include the timber wheel guards, rail posts and horizontal railing members. Metal railing shall include posts, web members and horizontal members of sidewalk and roadway railing and, unless otherwise shown on the plans or specified in the special provisions, may be constructed either of aluminum alloy or steel.

117–2 MATERIALS

All materials shall conform to the specifications contained herein or shown on the plans for the various classes of materials from which the railings are constructed.

The fine aggregate used for concrete in bridge railing shall be of grading No. 1 in Section 39–2.02B2, and the use therein of high-early-strength cement will not be permitted.

117–3 CONSTRUCTION DETAILS

117–3.01 CONCRETE RAILINGS

117–3.01A General

Concrete railing shall be constructed in accordance with the specifications for Cement Concrete Structures, Section 101, Portland Cement Concrete for Structures, Section 107, and for Reinforcing Steel, Section 111. Railing insofar as possible, shall be constructed after the roadway and sidewalk slabs for the entire structure are completed.

117–3.01B Forms for Concrete Railings

Railing and curb forms shall be carefully constructed of steel, finished lumber and/or plywood conforming to the requirements for forms in Section 101–3.03, unless the special provisions provide otherwise. When completely assembled and in place above the curb sections, forms shall have interior dimensions and be of such rigidity as to accurately shape and contain the concrete to produce the railing according to the dimensions shown on the plans. The maximum allowable inside surface deviation of the forms shall be one-eighth (⅛) inch.

Rail forms in place ready for placement of concrete shall be of uniform height and be of such alignment and grade that the finished rail will present a pleasing appearance with no abrupt changes.

Wherever the height of the railing must vary from the grade of the structure to have a pleasing appearance, such as at vertical or horizontal curves or other grade points, the variation to be made shall be taken in the curb section forms and a uniform height throughout maintained for the railing. Structure grade humps followed by sags shall be avoided in the railing by varying the curb height.

All cost to the Contractor for adjusting curb height as directed by the Engineer shall be considered incidental to the railing form construction. Provided, however, that should the Engineer require forms to be again reset after once erected and accepted to a final elevation, this new resetting shall be considered as extra work and paid for as provided in Section 9.03.

117–3.01C Removal of Forms

Forms for concrete railings shall not be removed for at least three (3) days after the placing of the concrete. Curb forms may be removed as soon as practicable after the concrete is placed, upon approval of the Engineer. Forms shall be removed without injury to the concrete. After removal, all forms intended for re-use shall be cleaned and freshly coated with form oil.

117–3.01D Finishing and Curing

Initial placement of concrete in forms shall be to an elevation slightly above the required top grade for the railing. The surface shall then be smoothed off to true grade, troweled and edged in a workmanlike manner to form the surface to the cross section shown on the plans. The troweled top railing shall then be lightly brushed transversely with an approved fine bristle brush. At all expansion joints in the railing, special care shall be employed when troweling and edging to obtain joint edges on both sides of the joint that are true to the longitudinal grade of the railing. The finished railing top across expansion joints shall meet the requirements for surface smoothness specified for a Class 1 Surface Finish in Section 107–3.16. Upon completion of final brushing, the concrete surface shall be protected for curing by an approved method specified in Section 39–3.20.

Concrete railing shall be cured for a period of ten (10) days following the day concrete was placed and the forms shall remain in place for a minimum of three (3) days of this curing period. When forms are removed by the Contractor before the ten (10) day curing period has elapsed, the exposed railing shall be recovered immediately with an approved curing agent and be kept so covered for the remaining curing time.

At the end of the curing period, the railing shall be thoroughly washed with water, all form oil shall be removed and the railing shall be given a Class I Surface Finish. The completed surface of the railing shall be of uniform color and texture.

When liquid membrane curing compound is used, each surface to which it is applied shall receive the specified class of surface treatment, and this finish shall be accepted by the Engineer before the liquid membrane is applied. All adjacent or nearby surfaces which are to receive a surface finish shall be protected from the application of the membrane until after the specified finish is accomplished and accepted.

117–3.02 TIMBER RAILINGS

Wheel guards and railings shall be accurately framed in accordance with the plans and erected true to line and grade. On structures having horizontal or vertical curves, the heights of railings or wheel guards shall be varied at points of change in grade if, in the opinion of the Engineer, such variations are necessary to produce the desired appearance.

Unless otherwise specified, wheel guards shall be beveled on the roadway side as shown on the plans and shall be surfaced on the top edge and roadway side or may be surfaced on all sides (S4S). Wheel guards shall be laid in sections not less than twelve (12) feet long. All material for rails and rail posts shall be surfaced four sides (S4S).

Railing members shall be securely fastened together as shown on the plans. Bolts shall be tightened when they are installed and shall be retightened immediately prior to final acceptance of the contract.

Rails and rail posts shall be painted in accordance with the specifications for Timber Structures, Section 103–3.03 and Paints and Painting, Section 116.

All construction methods not outlined in this section of the specifications, shall be in accordance with specifications for Timber Structures, Section 103, and Timber and Lumber, Section 114.

117–3.03 METAL RAILINGS

Metal railings shall be erected and fastened true to line and grade or camber. Railings on steel spans may be erected at the same time the trusses or girders and floor systems are erected but shall not be completely fastened until after the roadway slab is in place. On spans having concrete sidewalks, the railings shall be aligned and fastened in place and strutted and tied to the trusses or girders before placing concrete in sidewalk slabs. Struts and ties shall remain in place for at least five (5) days after the slab is placed.

Top rails, usually of pipe, and all other horizontal elements shall be aligned and fastened after all dead load has been applied to the span.

Bolts shall be placed with heads of bolts facing the roadway, and all bolt heads shall have top and bottom edges parallel to the grade.

On multiple span bridges the rail and wheel guard heights at the ends of each span shall be varied to a sufficient amount to produce a uniform camber or grade from end to end of the bridge.

After the metal railing has been set initially, the Contractor shall readjust the entire railing or any sections thereof, if necessary, to secure a continuous line and grade of pleasing appearance.

117–5 MEASUREMENT AND PAYMENT

117–5.01 CONCRETE RAILINGS

Payment for concrete railings will be made at the unit contract price per linear foot for "Reinforced Concrete Bridge Railing," and the unit contract price per pound for "Steel Reinforcing Bars," which prices shall be full compensation for all materials, labor, tools and equipment necessary to construct and finish the railings as shown on the plans and as outlined herein.

117–5.02 TIMBER RAILINGS

Payment for timber handrailings will be made at the unit contract price per M.B.M. for "Timber and Lumber," which price shall be full compensation for all materials, including hardware, labor, tools and equipment necessary to construct and paint the railings as shown on the plans and outlined herein.

117–5.03 METAL RAILINGS

Payment for metal railings will be made for such of the following bid items as are included and shown in any particular contract:

1. "Standard Bridge Railing, Type.....," per linear foot.

The unit contract prices per linear foot for metal railings shall be full compensation for all materials, labor, tools and equipment necessary to construct the railings as shown on the plans and as outlined herein, including fastenings, anchor bolts, galvanizing and painting if specified.

In case no item is included in the proposal for "Standard Bridge Railing, Type .....," and payment is not otherwise provided, all metal railings shall be included in the lump sum contract price for "Structural Carbon Steel."

Section 118—Waterproofing

118–1 DESCRIPTION

The waterproofing shall be a firmly bonded membrane composed of two layers of fabric and three moppings of asphalt, together with a coating of primer. The waterproofing shall be applied to those surfaces and construction joints noted on the plans or directed by the Engineer in writing. When specified on the plans, a protective layer of portland cement mortar shall be laid over the entire surface of the waterproofing membrane.

118–2 MATERIALS

118–2.01 ASPHALT FOR WATERPROOFING

Asphalt for waterproofing shall conform to the requirements of ASTM Designation D 449, Asphalt for Dampproofing and Waterproofing. Type A asphalt shall be used for application below ground and Type C for application above ground.

The material used as primer shall conform to the requirements of ASTM Designation D 41, Primer for Use with Asphalt in Dampproofing and Waterproofing.

118–2.02 WATERPROOFING FABRIC

Waterproofing fabric shall be a saturated cotton fabric meeting the requirements of ASTM Designation D 173, Woven Cotton Fabrics Saturated with Bituminous Substances for Use in Waterproofing.

118–2.03 PORTLAND CEMENT MORTAR

Portland cement and sand for the mortar protection course shall conform to the requirements for portland cement and fine aggregate as outlined for concrete masonry in Section 107.

118–3 CONSTRUCTION DETAILS

118–3.01 STORAGE OF FABRIC

The fabric shall be stored in a dry protected place. The rolls shall not be stored on end.

118–3.02 PREPARATION OF SURFACE

All concrete surfaces which are to be waterproofed shall be reasonably smooth and free from projections or holes which might puncture the membrane. The surface to be waterproofed shall be dry and shall be thoroughly cleaned of all dust and loose material. No waterproofing shall be done in wet weather, nor when the temperature is below thirty-five degrees (35°) F., without authorization in writing by the Engineer.

118–3.03 APPLICATION OF WATERPROOFING

The asphalt shall be heated to a temperature not less than 300° F., and not more than 350° F., with frequent stirring to avoid local overheating. The heating kettle shall be equipped with thermometers.

In all cases, the waterproofing shall begin at the low point of the surface to be waterproofed so that water will run over and not against or along the laps.

The application of the waterproofing shall be as follows:

Beginning at the low point of the surface to be waterproofed, a coating of primer shall be applied and allowed to dry before the first coat of asphalt is applied.

A section about twenty (20) inches wide and the full length of the surface shall then be mopped with the hot asphalt and there shall be rolled into it, immediately following the mop, the first strip of fabric of half width, which shall be carefully pressed into place so as to eliminate all air bubbles and obtain close conformity with the surface. This strip and an adjacent section of the surface of a width equal to slightly more than half the width of the fabric being used, shall then be mopped with hot asphalt and a full width of the fabric shall be rolled into this, completely covering the first strip, and pressed into place as before. This second strip and an adajcent section of the concrete surface shall then be mopped with hot asphalt and the third strip of fabric shingled on so as to lap the first strip not less than two (2) inches. This process shall be continued until the entire surface is covered, each strip of fabric lapping at least two (2) inches over the last strip but one. The entire surface shall then be given a final mopping of hot asphalt.

Under no circumstances shall one layer of fabric touch another layer at any point or touch the surface, as there must be at least three (3) complete moppings of asphalt.

In all cases the mopping shall be so thoroughly done that the surfaces will be completely covered. The asphalt must be sufficiently heavy so that no gray spots appear on the concrete and the weave of the cloth is entirely concealed. On horizontal surfaces, not less than twelve (12) gallons of asphalt shall be used for each one hundred (100) square feet of finished work, and on vertical surfaces not less than fifteen (15) gallons shall be used.

The work shall be so regulated that, at the close of a day's work, all cloth that is laid will have received the final mopping of asphalt. Special care shall be taken at all laps to see that they are thoroughly sealed down.

At the edges of the membrane and at any points where it is punctured by drains, pipes, etc., suitable provisions shall be made to prevent water getting between the waterproofing and the surface waterproofed.

All flashing at curbs and against girders, spandrel walls, etc., shall be done with separate sheets lapping the main membrane not less than twelve (12) inches. Flashing shall be closely sealed either with full metal flashing or by imbedding the upper edges of the flashing in a groove poured full of an acceptable joint cement.

There shall be no break in the waterproofing membrane at expansion joints. The fabric shall be folded so as to allow for expansion movement. At the ends of the structure the membrane shall be carried well down on the abutments and suitable provision made for the movement due to expansion and contraction.

118–3.04 PROTECTION COURSE

When specified on the plans, a protective layer of portland cement mortar not less than one and one-half (1½) inches in thickness shall be laid over the entire surface of the waterproofing membrane. The protective coating shall be placed immediately after the membrane has cooled to normal temperature. The protective coating shall be composed of one part portland cement to two parts sand. The protective coating shall be uniformly distributed over the surface, gently tamped into place and so finished by hand as to present a smooth hard surface. The protective coating shall be covered and kept moist for a period of one (1) week.

118–5 MEASUREMENT AND PAYMENT

Payment for "Waterproofing" will be made at the unit contract price per square yard of completed surface, which price shall be full compensation for all labor, materials, tools, and equipment required to complete the work. Waterproofing of construction joints not shown on the plans shall be at the Contractor's own expense.

DIVISION SIX—STANDARD FORMS

Form No.	*Title*	*Page*
1.	PROPOSAL	123
2.	PROPOSAL SIGNATURE SHEET	124
3.	BID BOND FORM	125
4.	INSTRUCTIONS TO BIDDERS, PROPOSAL, SPECIFICATIONS AND CONTRACT	126
5.	CONTRACT	127-128
6.	CONTRACT BOND	129-130
6a.	CONTRACT BOND (Alternate Form)	131-132
6b.	PRIVATELY FINANCED STREET IMPROVEMENT BOND	133
7.	MINIMUM WAGE AFFIDAVIT	134
8.	LETTER FOR EMPLOYMENT OF SUBCONTRACTOR (Not used)	135
9.	CONTRACT CHANGE ORDER AGREEMENT	136
10.	FORCE ACCOUNT STATEMENT FOR STREET WORK	137
11.	FORCE ACCOUNT STATEMENT OTHER THAN STREET	138
12.	WEEKLY STATEMENT OF WORKING DAYS (Not used)	139
13.	NON-COLLUSION AFFIDAVIT FORM	140

(STANDARD FORM NO. 1)

PROPOSAL

Seattle, Washington.....

To the BOARD OF PUBLIC WORKS of the CITY of SEATTLE:
The undersigned hereby certif.....that.....ha.....personally and carefully examined the plans, specifications, form of contract, and foregoing instructions for

under Ordinance No.....creating Local Improvement District No....., that.....ha.....examined the site of the work and the location where said work is to be done, that.....fully understand.....the manner in which payment is proposed to be made for the cost thereof and that.....understand.....that the quantities shown on this proposal are for the purpose of comparing bids only, and having made the necessary examinations, hereby propose.... to furnish all material and to perform all labor which may be required to complete said work within the time fixed, and upon the terms and conditions provided in the said plans, specifications, contract and foregoing instructions at the following prices, to-wit:

Certified Check enclosed $.....

Bid Bond enclosed $.....

Item No.	Estimated Quantities for the Purpose of Comparing Bids Only	ITEMS WITH UNIT PRICE BID (Unit Prices to Be Written in Words)	UNIT PRICE		UNIT OF MEASURE
			Dollars	Cts.	

Complete Address .....

.....

.....

(Zip Code)

Telephone No.....

.....

Contractor

By.....

Eng Form 77C

(STANDARD FORM NO. 2)

PROPOSAL SIGNATURE SHEET

.....
(Job Description and Location)
.....
.....
.....

Ordinance No. .....

L.I.D. No. .....

W.O. No. .....

....., 19.....
(Date)

.....
(Bidder)

by .....
(Authorized Official)

.....
(Address)

NOTE: (1) If the the bidder is a co-partnership, so state, giving firm name under which business is transacted.

(2) If the bidder is a corporation, this proposal must be executed by its duly authorized officials.

(3) If no bid is submitted, kindly mark "NO BID" and return to.....
(City Clerk, or other)

.....
(Address)

(STANDARD FORM NO. 3)

BID BOND FORM

Herewith find deposit in the form of a certified check, cashiers check, cash, or bid bond in the amount of $..... which amount is not less than five percent of the total bid.

SIGN HERE.....

.....

BID BOND

KNOW ALL MEN BY THESE PRESENTS:

That we, ..., as Principal,

and ....., as Surety,

are held and firmly bound unto the (Political Subdivision), as Obligee, in the penal sum of.....

.....Dollars, for the

payment of which the Principal and Surety bind themselves, their heirs, executors administrators, successors and assigns, jointly and severally, by these presents.

The condition of this obligation is such that if the Obligee shall make any award to the Principal for

according to the terms of the proposal or bid made by the Principal therefor, and the Principal shall duly make and enter into a contract with the Obligee in accordance with the terms of said proposal or bid and award and shall give bond for the faithful performance thereof, with Surety or Sureties approved by the Obligee; or if the Principal shall, in case of failure so to do, pay and forfeit to the Obligee the penal amount of the deposit specified in the call for bids, then this obligation shall be null and void; otherwise it shall be and remain in full force and effect and the Surety shall forthwith pay and forfeit to the Obligee, as penalty and liquidated damages, the amount of this bond.

SIGNED, SEALED AND DATED THIS.....DAY OF....., 19.....

.....
Principal

.....
Surety

.....

....., 19.....

Received return of deposit in the sum of $.....

.....

(STANDARD FORM NO. 4)

The City of Seattle, Board of Public Works
INSTRUCTIONS TO BIDDERS, PROPOSAL, SPECIFICATIONS AND CONTRACT

For .....

as authorized by Ordinance No.....

Prepared by the City Engineer.....

.....
Principal Assistant City Engineer

.....
Principal Construction Engineer *City Engineer*

Examined and approved by the Board of Public Works .....

Attest:

.....Secretary .....
Chairman

INSTRUCTIONS TO BIDDERS

Sealed proposals for this work will be received by the Board of Public Works of the City of Seattle until 2:00 o'clock P.M., Wednesday.....in Room 404, Seattle Municipal Building.

All bids shall be accompanied by a certified check payable to the order of the City Comptroller, or by a bid bond approved as to form by the Corporation Counsel in writing, prior to the time and date set for the bid opening, for a sum of not less than five (5%) per cent of the amount of the bid and no bid shall be considered unless accompanied by such check or bid bond. If the contract is let, all checks shall be returned to the bidders, except that of the successful bidder, which shall be retained until a contract is entered into between the bidder and the City, in accordance with such bid. If the said bidder fails to enter into such contract in accordance with his bid within ten days from date at which he is notified that he is the successful bidder, the said check and the amount thereof shall be forfeited to the City, or, if a bid bond accompanied the bid, the necessary legal steps will be taken by the City to recover an amount equal to five (5%) per cent of the amount of the bid. Before such contract between the successful bidder and the City shall be valid or binding against the City, the Contractor shall enter into a joint and several bond with the City, for the use of said City, and also for the use of all persons who may perform or cause to be performed any work or labor, or furnish or cause to be furnished any skill, labor or material in the execution of such contract, which bond shall be signed by the Contractor and two or more good and sufficient sureties, or with a surety company as surety, and shall be in the amount of

..... Dollars ($.....), but not less than one hundred (100%) per cent of the bid, plus estimated state sales tax when applicable, but exclusive of departmental charges and engineering costs, such charges and costs being no part of this proposal or contract.

All payments for this work shall be made

and not otherwise.

The work embraced in the following Proposal and Contract shall be under the direct supervision of the City Engineer, subject to the acceptance and approval of the Board of Public Works. It shall be begun immediately upon notice to begin work from the City Engineer and shall be completed within

.....days (Sundays and holidays included) after the date of such notice.

Bidders are notified to examine thoroughly these instructions, the proposal, the form of contract, the plans and specifications. If there be any doubt or obscurity as to meaning of the same, intending bidders should ask the City Engineer for an explanation before submitting their proposal.

Permission will not be given for the withdrawal or modification of any bid or proposal.

Bids for this improvement must be made upon the proposal provided therefor by the City Engineer, without interlineation or amendment.

Bids must be written with ink in both words and figures for each item contained in the proposal provided for this improvement to the extent that the proposal represents a complete integral project. In case of a discrepancy between the written words and figures, the written words shall govern.

Quantities listed on the proposal are for the purpose of comparing bids only.

Bids will not be received if detached from the form of contract with which they are bound, nor shall any of the accompanying papers be detached therefrom, but the entire package must be unbroken, in good order and enclosed in a sealed envelope, endorsed with the name of the bidder and the name of the work.

Eng. Form 78-A—CSS 7.37

(STANDARD FORM NO. 5)

CONTRACT

THIS CONTRACT, Made this.....day of....., A.D. 19....., by and between the City of Seattle, a Municipal Corporation of the State of Washington, party of the first part, and ....., part..... of the second part.

WITNESSETH:

Section 1. That the said part.....of the second part agree.... to improve

in said City of Seattle as ordered by Ordinance No.....in all respects in accordance with the plans now on file in the office of the City Engineer of said City and in accordance with the standard plans and specifications of the City of Seattle, duly approved by the Board of Public Works thereof on the 8th day of January, 1964, and filed in the office of the City Comptroller and ex-officio City Clerk, being in said office, insofar as the provisions of said standard plans and specifications are applicable to said work, which said standard plans and specifications are, by express reference thereto, hereby made a part of this contract; and also in accordance with the special specifications and instructions hereto attached, and the Laws of the State of Washington, and Charter and Ordinances of the City of Seattle, as amended and now in force, all of which, so far as applicable, are hereby made a part of this contract.

Section 2. The said part..... of the second part agree.... to begin the work embraced in the contract for this improvement immediately after written notice shall have been given to said part..... of the second part by the City Engineer, and to carry said work on regularly and uninterruptedly thereafter (unless the City Engineer or the Board of Public Works shall otherwise, in writing, specially direct), with such force as to secure its completion within..... days (Sundays and holidays included) after such notice to begin work; the time of beginning, rate of progress and time of completion being essential conditions of this contract.

Section 3. That the said party of the first part agrees to pay to said part..... of the second part for the actual quantities in the completed work according to the schedule of unit prices set forth in the proposal hereto attached and made a part of the contract.

Section 4. Subject to the provisions of Chapter 63, Laws of Washington for 1945, the said party of the second part hereby covenants, stipulates and agrees:

That he will pay or cause to be paid to the employes on or in connection with this work or under this contract not less than the current hourly rate of wages specified for the class of labor performed.

That he will not enter directly or indicetly into any agreement with any person or persons for labor or employment at any less wage.

That he will not make or permit any assignment or transfer of this contract, or of any of work to be performed hereunder, nor sublet said work or any part thereof in any manner or by any scheme, device or subterfuge which will permit or secure the performance of labor upon or in connection with this work or under this contract, at a rate of wage less than herein specified.

That every scheme or device by which employes employed upon or in connection with this work or under this contract shall sublet or subcontract the same, or take any transfer or assignment of this conract or of any work herein provided for, as a co-partnership or other association, whereby in lieu of receiving the minimum rate or wages hereinabove specified they shall receive a less sum in cash and become sharers in the profits or losses under this contract in compensation for their labor, shall be deemed a subterfuge, device or scheme to evade the provisions of this contract, and shall be null and void and shall render this contract subject to forfeiture.

That the above covenants are made for the benefit of the individual employes of the contractor, and that any employe performing work or labor under this contract shall have a cause of action against the contractor for the difference between the wages herein specified and the amount actually paid to such employe.

That he will keep complete and accurate pay rolls, upon which shall appear the following information with respect to each person employed upon or in connection with this work or under this contract:

(Continued)

(STANDARD FORM NO. 5, cont.)

1. Name and residence address;
2. Classification of work as defined by specifications;
3. Number of hours employed each day;
4. Total number of hours employed each pay roll period;
5. Rate of wages;
6. Total amount earned;
7. Deductions for medical aid;
8. Net amount paid;
9. Whether a citizen of the United States;
10. Whether a head of a family;

said pay roll to be at all times accessible and open to inspection by the Board of Public Works, and a copy thereof duly signed by the contractor or his authorized agent and verified before a Notary Public, to be filed with the Secretary of said Board not later than seventy-two (72) hours after the expiration of each pay roll period.

That all employes will be paid in full not less than once each week and in lawful money of the United States, in the full amount accrued to each employe at the time of closing of the pay roll, which shall not be more than three (3) days prior to the date of payment.

That preference in employment upon the work contemplated herein or done hereunder shall at all times be given to citizens of the United States who are heads of families and residents of The City of Seattle and who shall have been such residents for at least one year last past: Provided that citizens of the United States who are not heads of families and residents of The City of Seattle for at least one year last past may be employed in the event that citizens and residents who are heads of families and are competent and willing to perform the work required for or upon this improvement or under this contract, cannot be obtained; that the exclusion of aliens from the work will exclude any and all alien members of the undersigned contracting firm or co-partnership; and that no alien will be employed thereon or in connection therewith without a valid and subsisting permit from the Board of Public Works therefor.

That to facilitate the enforcement of the above covenants the contractor agrees to prepare and file with the Board of Public Works a complete list containing the names and resident addresses of all of his employes and keep the same up to date at all times.

That in event of violation of any of these covenants or any provision thereof payment due from The City of Seattle on any work done under this contract may be withheld until full compliance therewith; that the work may be stopped, or, at the discretion of said Board of Public Works, with the consent of the City Council, this contract may be cancelled and forfeited.

IN WITNESS WHEREOF, Said party of the first part has caused these presents to be signed by the Chairman of the Board of Public Works and to be attested by the Secretary of said Board; and said part.....

of the second part.....hereunto set.....hand..... the day and year first above written.

THE CITY OF SEATTLE

By .....
Chairman of Board of Public Works.

.....
Secretary of Board of Public Works.

.....(Seal)

.....(Seal)

.....(Seal)

Eng. Form 7703

(STANDARD FORM NO. 6)

Contract Bond

Bond No.....

TO THE CITY OF SEATTLE, WASHINGTON

KNOW ALL MEN BY THESE PRESENTS, That we.....
.....
as Principal....., and....., a corporation organized and existing under and by virtue of the laws of the State of Washington and legally doing business in the State of Washington, as Surety, are held and firmly bound and obligated unto the CITY OF SEATTLE, a municipal corporation of the State of Washington, in the full and just sum of.....
.....Dollars ($.....) lawful money of the United States, for the payment of which sum, well and truly to be made, we hereby bind ourselves, our heirs, executors, administrators, successors and assigns, jointly and severally, firmly by these presents.

Sealed with our seals and dated this.....day of....., 19.....

THIS BOND is executed in pursuance of Sections 39.08.010 to 39.08.080 inclusive R.C.W. Statutes of the State of Washington, and is subject to all the provisions thereof and of the Charter of the City of Seattle so far as the same is not in conflict with the laws of this State, and is entered into with said City for the use and benefit of all laborers, mechanics, subcontractors, materialmen, and all persons who supply such person or persons, or subcontractors, with provisions or supplies for the carrying on of the work covered by the contract and entered into on the.....day of, 19....., between the above named, undersigned, and bounden principal....., and the City of Seattle, for the improvement of.....
by.....
....., as ordered by Ordinance No.....,
creating Local Improvement District No.....

AND THE CONDITIONS OF THIS OBLIGATION ARE SUCH, That if the above named principal..... shall faithfully perform said contract, which is hereby expressly referred to and made a part hereof, and shall pay all laborers, mechanics, subcontractors and materialmen, and all persons who shall supply such person or persons, or subcontractors, with provisions and supplies for the carrying on of such work, and comply with all the requirements of the laws of the State of Washington and the Charter and ordinances of the City of Seattle and amendments thereto not in conflict with the laws of this State; provided, however, that the conditions of this obligation shall not apply to any money loaned or advanced to any such contractor or subcontractor, or other person, in the performance of such work, then this obligation to be void; otherwise it shall remain in full force and effect.

ATTEST: .....
(Prinicpal)

..... *Secretary* .....

Countersigned by:

....

Agency Name

By..... .....
Surety

Residing Agent, ..., Washington. By.....
(Attorney-in-Fact)

(Over)

File No.....

CONTRACT BOND

to the

CITY OF SEATTLE, WASHINGTON

For Improvement of.....

.....

By.....

Ordinance No. .....

Local Improvement District No. .....

.....
Principal

.....
Surety

I hereby approve the form of the within Bond:

.....
Corporation Counsel

By.....
Assistant.

We hereby approve the within Bond and Surety thereon:

....., 19.....

.....
Mayor

.....
Administrative Assistant

I hereby approve the within Bond and the Sureties thereon:

....., 19.....

.....
City Clerk—City Comptroller

By.....
Chief Deputy

(ALTERNATE STANDARD FORM NO. 6a)

CONTRACT BOND—CITY OF SEATTLE

KNOW ALL MEN BY THESE PRESENTS:

That we,.....

.....

as Principal, and.....,
a corporation, organized and existing under and by virtue of the laws of the State of Washington and legally doing business in the State of Washington, as Surety, are held and firmly bound and obligated unto THE CITY OF SEATTLE, WASHINGTON, in the full and just sum of.....

.....Dollars,
lawful money of the United States, for the payment of which sum, well and truly to be made, we do bind ourselves, our and each of our heirs, executors and administrators, successors and assigns, jointly and severally, firmly by these presents.

Sealed with our seals and dated this.....day of....., 19.....

This bond is executed in pursuance of Section 39.08.010 to 39.08.080 Incl. R.C.W., Statutes of the State of Washington, as amended, and is subject to all the provisions thereof and of the Charter of THE CITY OF SEATTLE, so far as the same is not in conflict with the laws of this State, and is entered into with said City for the use and benefit of said city, and also for the use and benefit of all laborers, mechanics, subcontractors, materialmen, and all persons who supply such person or persons, or subcontractors, with provisions or supplies for the carrying on of the work covered by the contract entered into between the above named Principal and the said CITY OF SEATTLE, WASHINGTON, for the improvement of.....

.....

.....

.....as ordered by
Ordinance No....., creating Local Improvement District No....., and

THE CONDITIONS OF THIS OBLIGATION ARE SUCH, That, if the above named Principal shall faithfully perform said contract, which is hereby expressly refered to and made a part hereof, and shall pay all laborers, mechanics, subcontractors and materialmen, and all persons who shall supply such person or persons, or subcontractors, with provisions and supplies for the carrying on of such work, and comply with all the requirements of the laws of the State of Washington and the Charter and Ordinances of THE CITY OF SEATTLE, and amendments thereto not in conflict with the laws of this State: Provided, however, that the conditions of this obligation shall not apply to any money loaned or advanced to any such contractor or subcontractor, or other person, in the performance of any such work, whether specifically provided for in the contract or not, then this obligation to be void; otherwise it shall remain in full force and effect.

WITNESS:

.....(SEAL)

.....(SEAL)

.....
Surety

By.....
Attorney In Fact

(Over)

File No.....

BOND

of

.....

to

THE CITY OF SEATTLE

On Improvement of

.....

Under Ordinance No.....

Local Improvement District No.....

I hereby approve the form of the within Bond.

.....
Corporation Counsel

By.....
Assistant

We hereby approve the within Bond and the Sureties thereon.

.....
Mayor

.....
City Comptroller

Filed.....19.....

.....
City Comptroller

By.....
Deputy

.....
Surety

(STANDARD FORM NO. 6b)

PRIVATELY FINANCED STREET IMPROVEMENT BOND TO THE CITY OF SEATTLE, WASHINGTON

KNOW ALL MEN BY THESE PRESENTS:

That we.....Permittee, as Principal, and.....,

a corporation, organized and existing under and by virtue of the laws of the State of.....,

and legally doing business in the State of Washington, as Surety, are held and firmly bound and obligated unto The City of Seattle, Washington, in the full and just sum of.....

.....

Dollars, lawful money of the United States, for the payment of which sum, well and truly to be made, we do bind ourselves, our and each of our heirs, executors and administrators, successors and assigns, jointly and severally, firmly by these presents.

Sealed with our seals and dated this.....day of....., 19.....

This bond is executed pursuant to Ordinance No.....of The Ctiy of Seattle relating to the construction of certain improvements in its public streets and areas by the permittee at his own cost and expense.

AND THE CONDITIONS OF THIS OBLIGATION ARE SUCH, That if the above-named Principal shall faithfully perform all the terms of the permit granted by Ordinance No....., which is hereby expressly referred to and made a part hereof for the improvement of.....

.....

.....

.....

at his own cost and expense and shall complete all such authorized work to the satisfaction of the City Engineer within the time limit imposed by said Ordinance No.....or reasonable extensions of said time limit authorized by the Board of Public Works, shall repay to the City of Seattle all funds expended by said City in behalf of said improvement, and shall comply with all the requirements of the laws of the State of Washington; with the Charter and Ordinances of The City of Seattle, and amendments thereto not in conflict with the laws of this State; with the Standard Plans & Specifications of The City of Seattle; and the special plans and specifications approved for said improvement, then this obligation to be void; otherwise it shall remain in full force and effect.

SURETY	PRINCIPAL
..... Name (Typed or Printed)	..... Name (Typed or Printed)
By..... Surety Officer or Agent, and Title	By.....
	..... Signature (and Title if a Corporation)
(CORPORATE SEAL OF SURETY)	(CORPORATE SEAL if a Corporation)
APPROVED as to FORM ONLY A. L. NEWBOULD, Corporation Counsel	APPROVED as to PRINCIPAL, AMOUNT & DESCRIPTION R. W. MORSE, City Engineer
By.....	By.....
Date.....	Date.....

Note: This bond must be executed by permittee named in authorizing ordinance.

This form may be used with an attached list, or may be printed on back of payroll.

(STANDARD FORM NO. 7)

MINIMUM WAGE AFFIDAVIT FORM

(POLITICAL SUBDIVISION) .....

COUNTY OF..... } ss.

I, the undersigned, having been duly sworn, depose, say and certify that in connection with the performance of the work, payment for which this voucher is submitted, I have paid the following rate per hour for each classification of laborers, workmen, or mechanics, as indicated upon the attached list, now referred to and by such reference incorporated in and made an integral part hereof, for all such employed in the performance of such work; and no laborer, workman or mechanic so employed upon such work has been paid less than the prevailing rate of wage or less than the minimum rate of wages as specified in the principal contract; that I have read the above and foregoing statement and certificate, know the contents thereof and the substance as set forth therein is true to my knowledge and belief.

.....
CONTRACTOR

Subscribed and sworn to before me on this.....day of

....., 19.....

.....
Notary Public in and for the State of Washington
residing at

.....

(STANDARD FORM NO. 8—Not used)

Letter for Employment of Subcontractor

(Not used)

(STANDARD FORM NO. 9)

(POLITICAL SUBDIVISION)

CONTRACT CHANGE ORDER AGREEMENT

LID or Ordinance No.....

Contractor.....

Summary of Proposed Change:.....

.....

.....

.....

Plan Revisions: Dwg. # Rev. #

Specification Revisions: Page # Paragraph #

New Plans or Specs:

Price Change:

Lump Sum Increase $..... or Decrease $.....

or

Unit Price

Item	Quantity	Price	Increase	or	Decrease
.....	.....	.....	.....		.....
.....	.....	.....	.....		.....
.....	.....	.....	.....		.....
		Total	$.....	or $	.....

Signatures: Contractor..... Date .....

Engineer..... Date .....

Approved By..... ..... 19..... .....
(Municipal Authority) (Date) (Authorized Official)

Sample form letter to be used for Submission of Force Account statements for Public Road construction work.

(STANDARD FORM NO. 10)

GENERAL CONTRACTORS, INC.
1946 South Alaska St.
Tacoma, Washington

January 2, 1962

NOTE: To be Addressed to Authorized Official

Dear Sir: Re: Ordinance No. 99999—Force Account Performed—Removing and replacing 8″ wood culvert pipe with standard culvert pipe across roadway on "B" St. at station 12 + 39 on Dec. 28, 1961.

This extra work was required because the existing wood pipe was deteriorated and had to be replaced before asphalt could be placed, and was ordered by Mr. ....., ... (Name) (Title)
of .....
(Political Subdivision)

Labor (Health and Welfare Included)				
Foreman	2 hrs. at $3.86	$ 7.72		
Pipe Layer	4 hrs. at 3.22	12.88		
Laborer	8 hrs. at 3.00	24.00	$44.60	
Materials				
40 Lin. Ft. 8″ Culvert	$0.90	36.00	36.00	
Equipment				
Pickup Truck 4 hrs.	at $1.50	6.00	6.00	$ 86.60
Profit and Overhead				
18% of Labor, Equipment and Materials				15.59
Payroll Taxes				
Industrial Insurance 14 hrs. at $0.35	$0.49			
½ Medical Aid 14 hrs. at $0.0085	$0.12			0.61
				$102.80
*4% State Sales Tax on Materials ($36.00)				1.44
TOTAL FORCE ACCOUNT				$104.24

*Percentage to be in accordance with current rates prescribed by law.

Yours very truly,

.....
GENERAL CONTRACTORS, INC.

TO BE FURNISHED BY CONTRACTOR.

Sample form letter to be used for submission of Force Account statements on all projects other than Public Road construction work.

(STANDARD FORM NO. 11)

GENERAL CONTRACTORS, INC.
1946 South Alaska St.
Tacoma, Washington

February 18,1959

Mr. ..... ← NOTE: To be addressed to authorized official.

Re: Force Account. L.I.D. No. 4444—Lowering Existing Sanitary Sewer at 3714 South Cushman Ave. (Sta. 46 + 10, on the left). January 5, 1959.

Dear Sir:

This work was necessary because the sanitary line was in the subgrade of the roadway. This extra work was ordered by Mr. ....., ..., (Political Subdivision) (Title)

Labor (Health and Welfare Incl.)				
Foreman	1 hr. at $ 3.86	$ 3.86		
Pipe Layer	1 hr. at 3.22	3.22		
Laborer	8 hrs. at 2.91	23.28		
Flagman	4 hrs. at 2.80	11.20	$41.56	
Materials				
40 Lin. Ft. 6-inch Sewer Pipe	$0.342	$13.68		
1 Only, 6-inch ⅛ Bend	0.765	0.77		
Mortar		0.40	14.85	
Equipment				
Pickup Truck	1 hr. at $1.50		1.50	$57.91
Profit and Overhead				
18% of Labor, Equipment and Material				8.69
Payroll Taxes				
Industrial Insurance 14 hrs. at $0.035	$ 0.49			
½ Medical Aid 14 hrs. at $0.0085	0.12			0.61
*4% State Sales Tax on $67.21				2.69
				$69.90

*Percentage to be in accordance with current rates prescribed by law.

Very truly yours,

.....
GENERAL CONTRACTORS, INC.

TO BE FURNISHED BY THE CONTRACTOR.

(STANDARD FORM NO. 12—Not used)

Weekly Statement of Working Days

(Not used)

(STANDARD FORM NO. 13)

NON-COLLUSION AFFIDAVIT

STATE OF WASHINGTON
COUNTY OF..... } ss.

NON-COLLUSION AFFIDAVIT

....., being first duly sworn on his oath says.....

that the bid above submitted is a genuine and not a sham or collusive bid, or made in the interest or on behalf of any person not therein named; and he further says that the said bidder has not directly or indirectly induced or solicited any bidder on the above work or supplies to put in a sham bid, or any other person or corporation to refrain from bidding; and that said bidder has not in any manner sought by collusion to secure to ..... self an advantage over any other bidder or bidders.

.....
(Contractor)

Subscribed and sworn to before me this..... day of ....., 19.....

.....
Notary Public in and for the State of Washington, residing

at.....

DIVISION SEVEN—STANDARD PLANS

Plan No.	Title
101	TYPES OF JOINTS FOR CONCRETE PAVEMENT
102	ARTERIAL PAVEMENT SECTIONS
102.1	INDUSTRIAL PAVEMENT SECTIONS
103	RESIDENTIAL PAVEMENT SECTIONS
104	CEMENT CONCRETE ALLEY PAVEMENTS
104.1	CEMENT CONCRETE ALLEY PAVEMENT WITH SUPPORT WALL
105	TYPE 105 DRIVEWAY—CEMENT CONCRETE—PUBLIC
106	TYPE 106 DRIVEWAY—CEMENT CONCRETE—PRIVATE
107	TYPE 107 DRIVEWAY PLACED WITH SIDEWALK CONSTRUCTION
108	TYPE 108 CURBS
109	TYPE 109 CURBS
110	TYPE 110 CURBS
111	TYPE 111 CURBS
112	JOINTS AND CURB DOWELS
113	JOINT HOLDER
114	SIDEWALK DETAILS
114.1	MONOLITHIC CURB AND SIDEWALK
115	CEMENT CONCRETE STAIRWAY CONSTRUCTION DETAILS
116	STEEL PIPE HANDRAIL CONSTRUCTION DETAILS
117	SIDEWALK DRAIN
118	MONUMENT CASE
119	INTERSECTION GRADE STAKE
120	(SPARE)
121	PAVEMENT PATCHING
122	TYPE 122 CURB—EXTRUDED ASPHALT CONCRETE
123	TYPE 123 TRAFFIC CURBS—PRECAST CEMENT CONCRETE
124	TYPE 124 TRAFFIC CURBS—BLOCK PRECAST CEMENT CONCRETE
125	TYPE 125 TRAFFIC BUTTONS
126	TYPE 126 TERMINAL NOSING—ILLUMINATED
127	TYPE 127 TERMINAL NOSING—ILLUMINATED
128	TYPE 128 PULL BOX—PRECAST
128.1	TYPE 128.1 PULL BOX—PRECAST
129	TYPE 129 CONCRETE JUNCTION BOX—CAST IN PLACE
129.1	TYPE 129.1 FRAME AND COVER FOR JUNCTION BOX
130	TYPE 130 MANHOLE
131	TYPE 131 MANHOLE
132	TYPE 132 MANHOLE
133	TYPE 133 MANHOLE
134	TYPE 134 MANHOLE
135	TYPE 135 MANHOLE
136	TYPE 136 MANHOLE
137	TYPE 137 MANHOLE DROP CONNECTION
138	LADDER AND LADDER IRONS
139	TYPE 139 18-INCH DIAMETER MANHOLE RING AND COVER
140	TYPE 140 24-INCH DIAMETER MANHOLE RING AND COVER
141	TYPE 141 24-INCH DIAMETER MANHOLE RING AND COVER
142	(SPARE)
143	LOCKING DEVICE FOR TYPE 141 MANHOLE COVERS
144	LOCKING DEVICE FOR TYPE 139 & 140 MANHOLE COVERS
145	MANHOLE RING EXTENSIONS
146	(SPARE)
147	(SPARE)
148	(SPARE)
149	LOCATION OF CATCH BASIN WITH INLETS
150	TYPE 150 CATCH BASIN
151	(SPARE)
152	TYPE 152 CATCH BASIN
153	TYPE 153 CATCH BASIN
153.1	TYPE 153 CATCH BASIN INSTALLATION
154	TYPE 154 TEMPORARY CATCH BASIN
155	TYPE 155 CATCH BASIN
156	CATCH BASIN INLET—PRECAST COVER AND EXTENSION UNITS
157	TYPE 157 18-INCH CIRCULAR INLET RING AND GRATE
158	TYPE 158 INLET FRAME AND GRATE
159	(SPARE)
160	TYPE 160 OUTLET TRAP
161	(SPARE)
162	TYPE 162 OUTLET TRAP
163	(SPARE)
164	TYPE 164 INLET CASTINGS AND ASSEMBLY
164.1	TYPE 164 INLET INSTALLATION
165	TYPE 165 INLET
165.1	TYPE 165 INLET INSTALLATION
166	TYPE 166 INLET
166.1	TYPE 166 INLET INSTALLATION
167	INLET EXTENSION FOR TYPE 164 INLET
168	TYPE 168 INLET FRAME
169	TYPE 169 INLET FRAME
170	TYPE 170 INLET GRATE
171	(SPARE)
172	(SPARE)
173	(SPARE)
174	(SPARE)
175	VERTICAL CONNECTION
176	SANITARY SIDE SEWER INSTALLATION
177	PIPE BEDDING
178	SEWER CONSTRUCTION DETAILS
179	SEWER PAYMENT DIAGRAM

Plan No.	Title
180	TYPE 180 HYDRANT SETTING—RESIDENTIAL
181	TYPE 181 HYDRANT SETTING—BUSINESS DISTRICT
182	1½-INCH BLOWOFF ASSEMBLY
183	TYPE 183 VALVE CHAMBER—MASONRY CONSTRUCTION
184	TYPE 184 VALVE CHAMBER—PRECAST
185	TYPE 185 VALVE CHAMBER—LARGE
186	TYPE 186 18-INCH VALVE CHAMBER RING AND COVER
187	TYPE 187 25½-INCH VALVE CHAMBER RING AND COVER
188	HYDRANT TEE FOR LEADED JOINTS
188.1	MECHANICAL JOINT HYDRANT TEE
189	6-INCH HUB AND FLANGE
190	6-INCH HUB AND FLANGE—MECHANICAL JOINT
191	CAST IRON VALVE BOX
192	CONCRETE BLOCKING—GENERAL
193	BLOCKING FOR CONVEX VERTICAL BENDS
194	WATER MAIN PAYMENT DIAGRAM
195	WATER MAIN CONSTRUCTION DETAIL
196	(SPARE
197	(SPARE)
198	(SPARE)
199	(SPARE)
200	HALF SECTION GRADING
201	BEAM GUARD RAIL
202	CONCRETE POST FENCE
203	TEMPORARY WOOD FENCE
204	TEMPORARY WOOD STAIRWAY
205	(SPARE)
206	SHEAR BOARD INSTALLATION
207	TEMPORARY PEDESTRIAN CROSSING
208	(SPARE)
209	STANDARD LOCATIONS FOR UNDERGROUND UTILITIES
210	ILLUMINATED BARRICADE
211	TEMPORARY STREET BARRICADE
212	TWIN DANGER LIGHT
212.1	TWIN DANGER LIGHT INSTALLATION
213	(SPARE)
214	RESTRICTED OVERHEAD CLEARANCE SIGN
215	GRAVITY RETAINING WALL
216	STANDARD SYMBOLS
217	ELEVATIONS AND DATUMS

DIVISION VII

STANDARD PLANS

(DRAWINGS)

Standard Plan No. 101

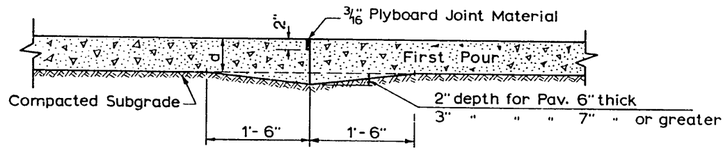

Construction Joint
Longitudinal or Transverse

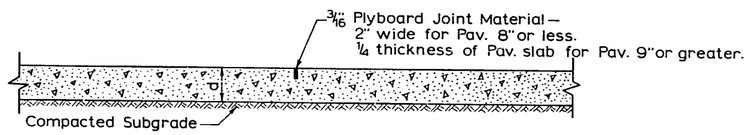

Contraction Control Joint
Longitudinal or Transverse

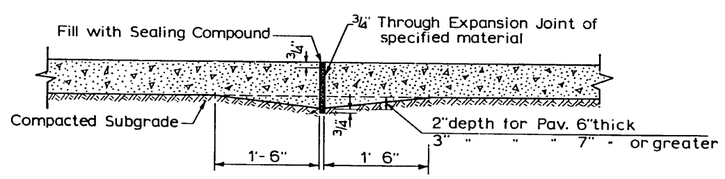

Expansion Joint
New Construction

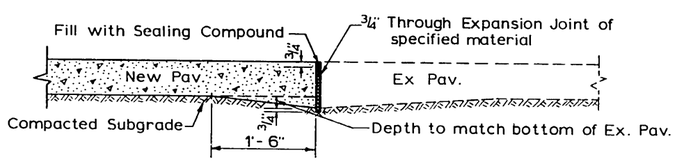

Expansion Joint
Between Old & New Construction

DO NOT SCALE

CITY OF SEATTLE
DEPARTMENT OF ENGINEERING

Types of Joints
for Concrete Pavement

APPROVED BY THE BOARD OF PUBLIC WORKS
JANUARY 8, 1964 _____ CHAIRMAN
ATTEST: _____ SECRETARY

Standard Plan No. 102

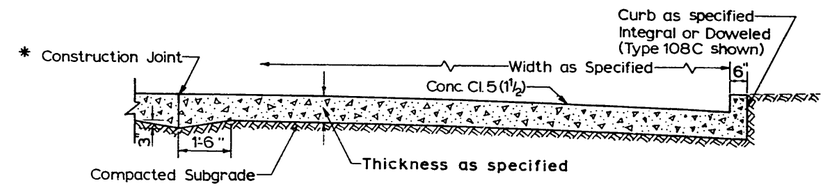

102 A-Cement Concrete Pavement

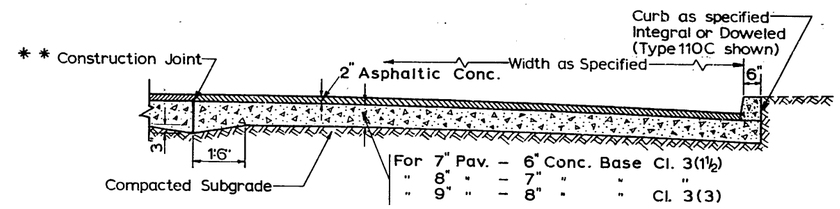

102 B-Asphalt Concrete on Cement Concrete Base

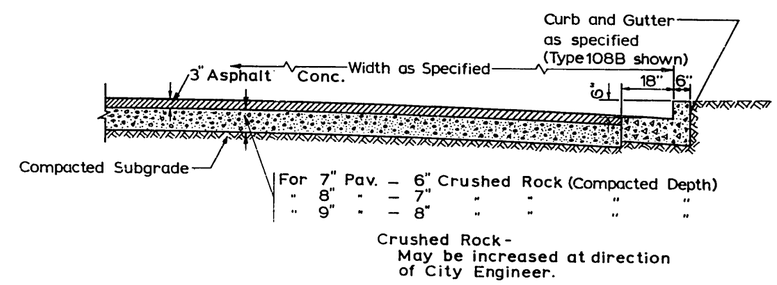

102 C-Asphalt Concrete on Crushed Rock Base

* Construction Joint when roadway is paved in two or more lanes.
Contraction Joint when entire roadway width is paved in single operation.

* * Construction Joint when base is placed in two or more lanes.

For spacing of Construction or Contraction Joints see Std. Specs. Sec. 7-3.06.05.1

DO NOT SCALE

CITY OF SEATTLE
DEPARTMENT OF ENGINEERING

Arterial Pavement Sections

APPROVED BY THE BOARD OF PUBLIC WORKS
JANUARY 8, 1964 _____ CHAIRMAN
ATTEST: _____ SECRETARY

Standard Plan No. 102

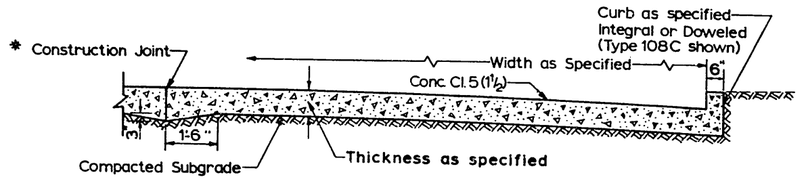

102 A - Cement Concrete Pavement

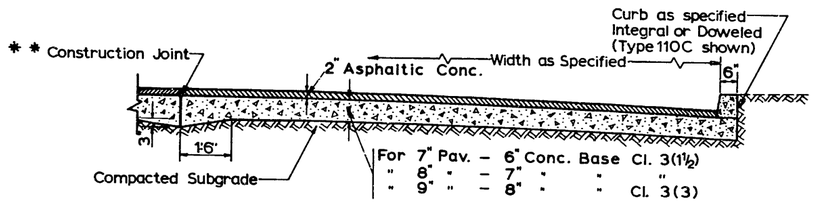

102 B - Asphalt Concrete on Cement Concrete Base

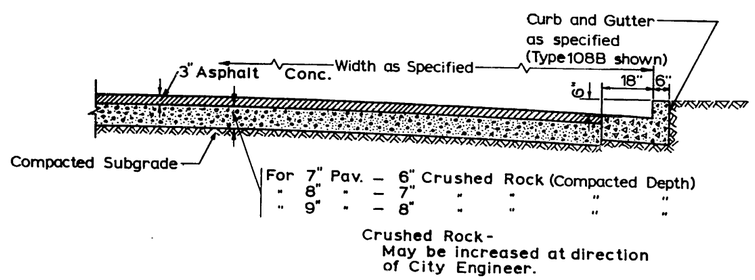

102 C - Asphalt Concrete on Crushed Rock Base

* Construction Joint when roadway is paved in two or more lanes.
Contraction Joint when entire roadway width is paved in single operation.

* * Construction Joint when base is placed in two or more lanes.

For spacing of Construction or Contraction Joints see Std. Specs. Sec. 39-3.18.

DO NOT SCALE

Revised 1-6-65	CITY OF SEATTLE DEPARTMENT OF ENGINEERING
	Arterial Pavement Sections
	APPROVED BY THE BOARD OF PUBLIC WORKS JANUARY 8, 1964 A.W. Moore CHAIRMAN ATTEST: E. Schwarz SECRETARY

Standard Plan No. 102

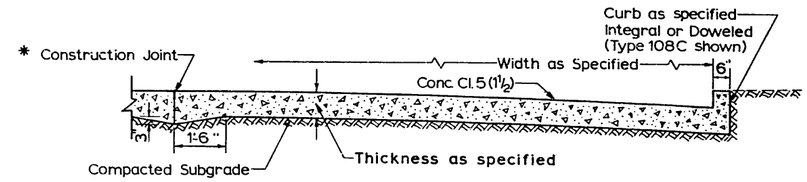

102 A - Cement Concrete Pavement

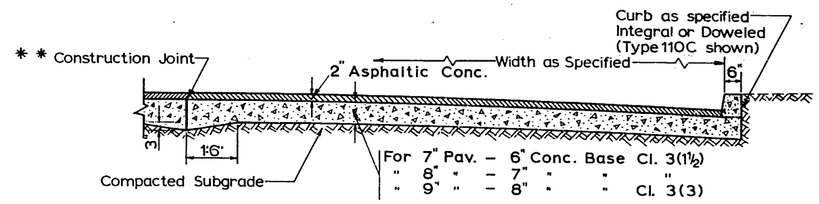

102 B - Asphalt Concrete on Cement Concrete Base

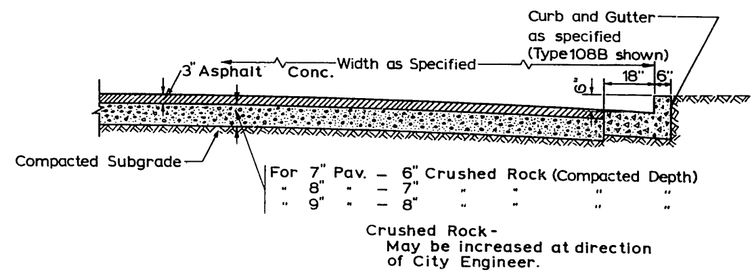

102 C - Asphalt Concrete on Crushed Rock Base

* Construction Joint when roadway is paved in two or more lanes.
Contraction Joint when entire roadway width is paved in single operation.

* * Construction Joint when base is placed in two or more lanes.

For spacing of Construction or Contraction Joints see Std. Specs. Sec. 7-3.06.05.1

DO NOT SCALE

CITY OF SEATTLE DEPARTMENT OF ENGINEERING
Arterial Pavement Sections
APPROVED BY THE BOARD OF PUBLIC WORKS JANUARY 8, 1964 A.W. Moore CHAIRMAN ATTEST: E. Schwarz SECRETARY

Standard Plan No.102.1

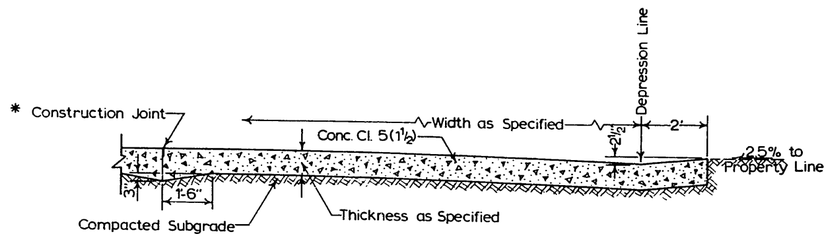

102.1 A-Cement Concrete Pavement

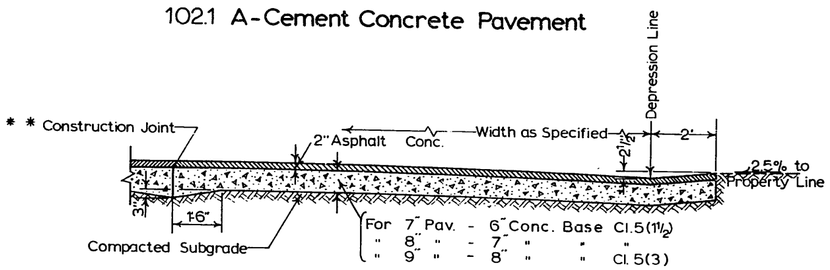

102.1 B-Asphalt Concrete on Cement Concrete Base

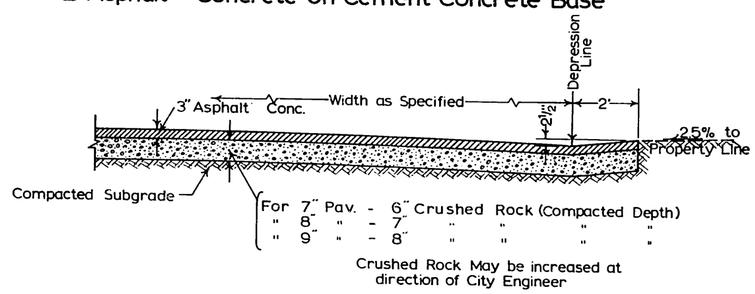

102.1 C-Asphalt Concrete on Crushed Rock Base

* Construction Joint when roadway is paved in two or more lanes.
Contraction Joint when entire roadway width is paved in single operation.

* * Construction Joint when base is placed in two or more lanes.

For spacing of Construction or Contraction Joints see Std. Specs. Sec. 7-3.06.05.1

DO NOT SCALE

CITY OF SEATTLE
DEPARTMENT OF ENGINEERING

Industrial Pavement Sections

APPROVED BY THE BOARD OF PUBLIC WORKS
JANUARY 8, 1964 — CHAIRMAN
ATTEST: — SECRETARY

Standard Plan No.103

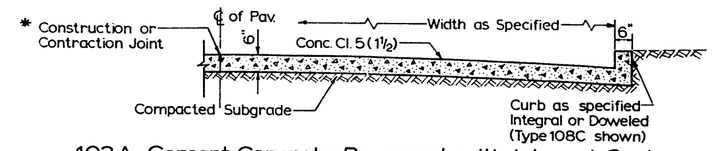

103A-Cement Concrete Pavement with Integral Curb

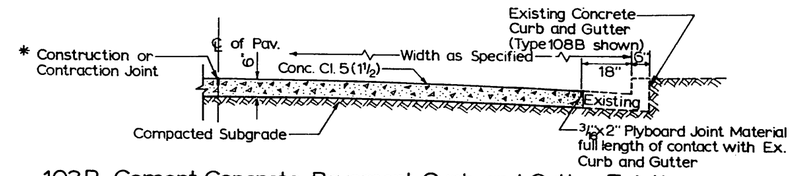

103B-Cement Concrete Pavement, Curb and Gutter Existing

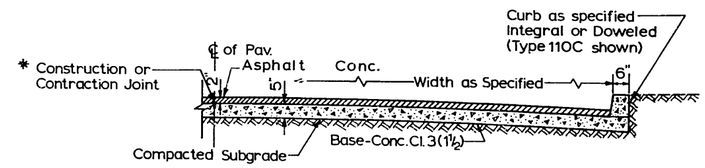

103C-Asphalt Concrete on Cement Concrete Base

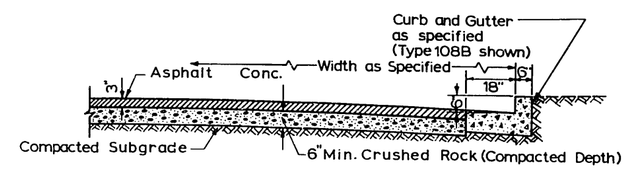

103D-Asphalt Concrete on Crushed Rock Base

For spacing of Construction or Contraction Joints See Std. Specs. Sec. 7-3.06.05.1.

* When Construction Joint thickened edge required.

DO NOT SCALE

CITY OF SEATTLE
DEPARTMENT OF ENGINEERING

Residential Pavement Sections

APPROVED BY THE BOARD OF PUBLIC WORKS
JANUARY 8, 1964 — CHAIRMAN
ATTEST: — SECRETARY

Standard Plan No.102.1

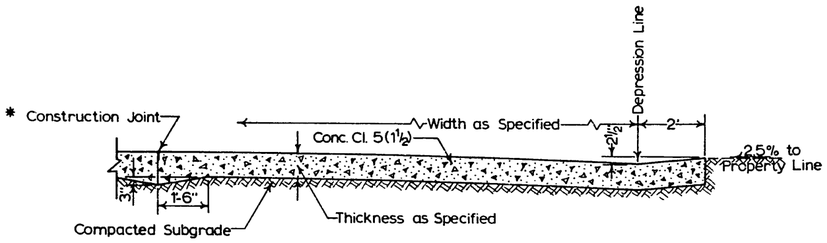

102.1 A-Cement Concrete Pavement

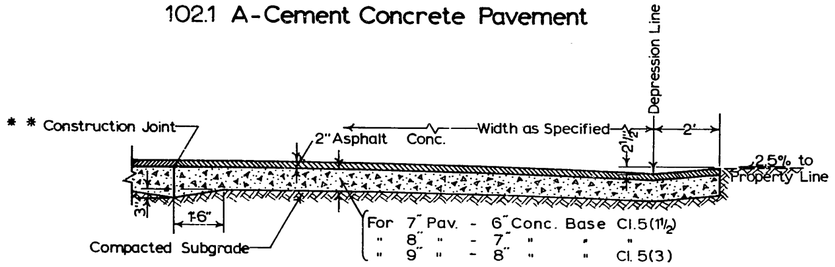

102.1 B-Asphalt Concrete on Cement Concrete Base

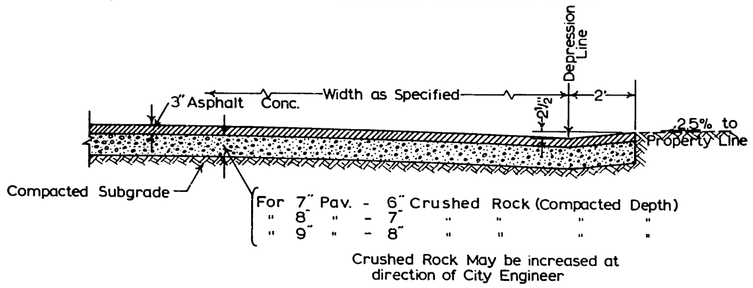

102.1 C-Asphalt Concrete on Crushed Rock Base

* Construction Joint when roadway is paved in two or more lanes.
Contraction Joint when entire roadway width is paved in single operation.

* * Construction Joint when base is placed in two or more lanes.

For spacing of Construction or Contraction Joints see Std. Specs. Sec. 39-3.18.

DO NOT SCALE

Revised 1-6-65	CITY OF SEATTLE DEPARTMENT OF ENGINEERING
	Industrial Pavement Sections
	APPROVED BY THE BOARD OF PUBLIC WORKS JANUARY 8, 1964 CHAIRMAN ATTEST: SECRETARY

Standard Plan No.103

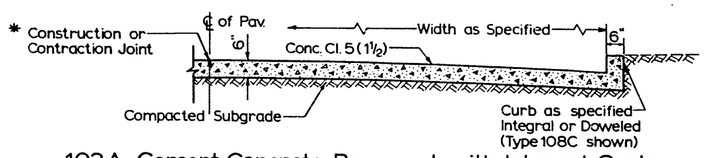

103A-Cement Concrete Pavement with Integral Curb

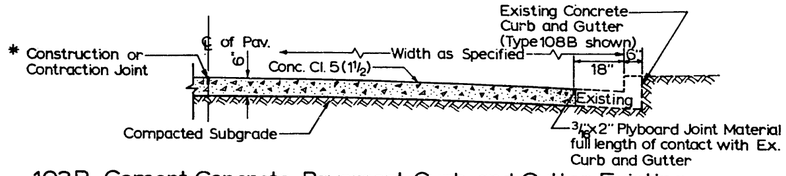

103B-Cement Concrete Pavement, Curb and Gutter Existing

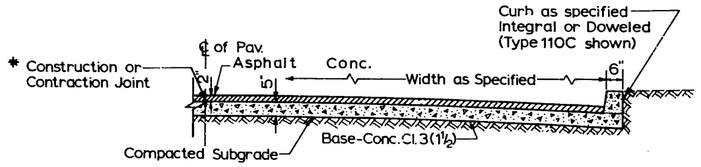

103C-Asphalt Concrete on Cement Concrete Base

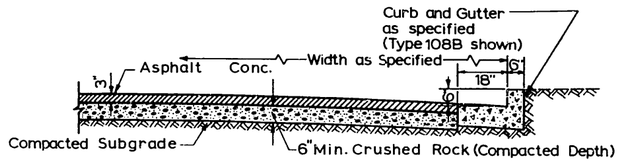

103D-Asphalt Concrete on Crushed Rock Base

For spacing of Construction or Contraction Joints See Std. Specs. Sec. 39-3.18.

* When Construction Joint thickened edge required.

DO NOT SCALE

Revised 1-6-65	CITY OF SEATTLE DEPARTMENT OF ENGINEERING
	Residential Pavement Sections
	APPROVED BY THE BOARD OF PUBLIC WORKS JANUARY 8, 1964 CHAIRMAN ATTEST: SECRETARY

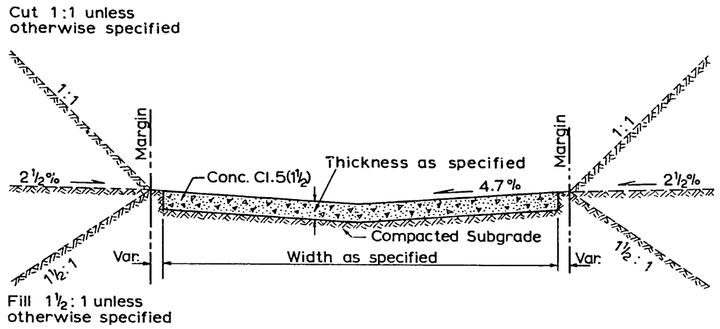

104 A-Cement Concrete Alley Pavement

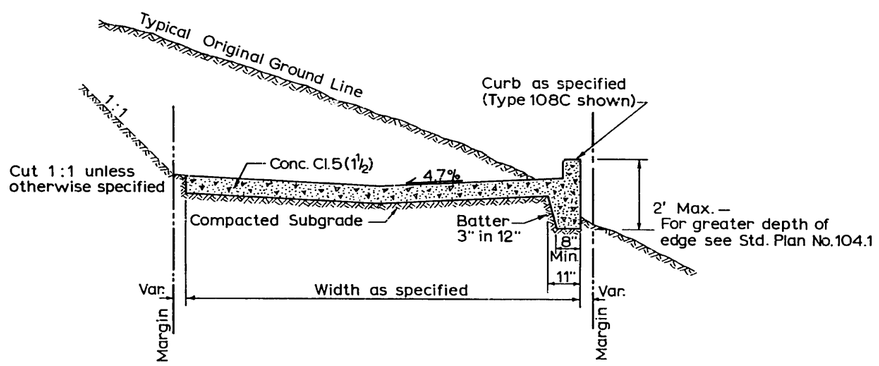

104B-Cement Concrete Alley Pavement
For Shallow Embankment Area

Note:
When alley pavement is 18' or wider place contraction joint along centerline of alley.

DO NOT SCALE

CITY OF SEATTLE
DEPARTMENT OF ENGINEERING

Cement Concrete Alley Pavements

APPROVED BY THE BOARD OF PUBLIC WORKS
JANUARY 8, 1964 — CHAIRMAN
ATTEST: — SECRETARY

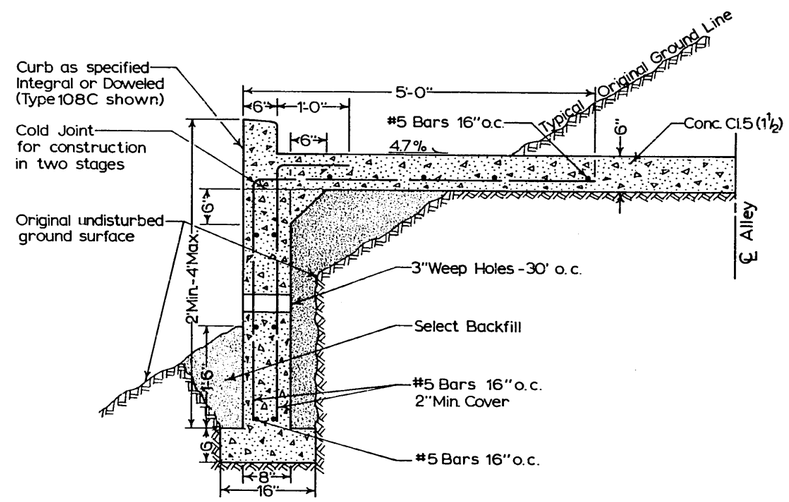

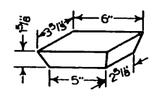

Base of Support Wall to be bearing on firm undisturbed earth.

Back form for Support Wall may be omitted and concrete placed against native earth when ground conditions permit.

Cold joint, when construction is not integral with alley slab, shall be at level with base of alley pavement slab, with Shear Key indentations spaced 18" on centers.

Beveled block for forming Shear Key in wall section to be made from standard 2"x4"x6" wood or other suitable material.

DO NOT SCALE

CITY OF SEATTLE
DEPARTMENT OF ENGINEERING

Cement Concrete Alley Pavement with Support Wall

APPROVED BY THE BOARD OF PUBLIC WORKS
JANUARY 8, 1964 — CHAIRMAN
ATTEST: — SECRETARY

Standard Plan No. 105

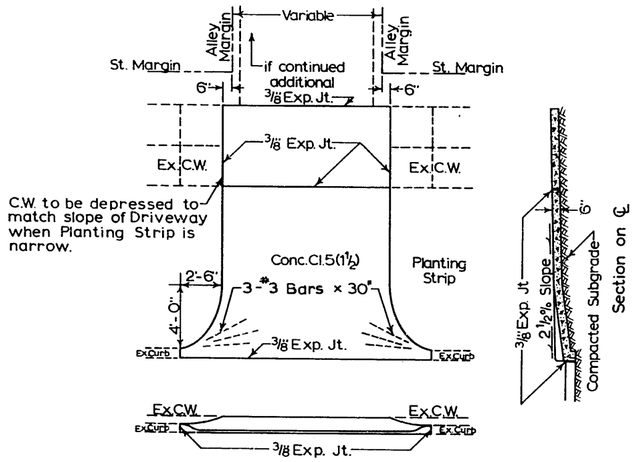

105B-Alternate-2

Curb is not integral with pav. (if Ex. Curb and Base are broken out Omit Exp. Jts. at Curb.)

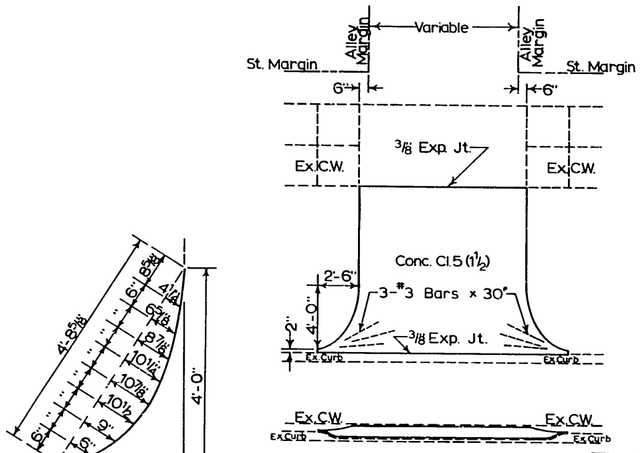

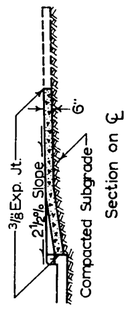

105A-Alternate-1

Curb poured integral with pav.

Standard 1" above Pavement (With narrow Planting strip or where early covering of ex. pav. with 2" Asph. Conc. is planned.-Const. 2" above pav.)

DO NOT SCALE

CITY OF SEATTLE
DEPARTMENT OF ENGINEERING

Type 105 Driveway
Cement Concrete-Public

APPROVED BY THE BOARD OF PUBLIC WORKS
JANUARY 8, 1964 CHAIRMAN
ATTEST: SECRETARY

Standard Plan No. 106

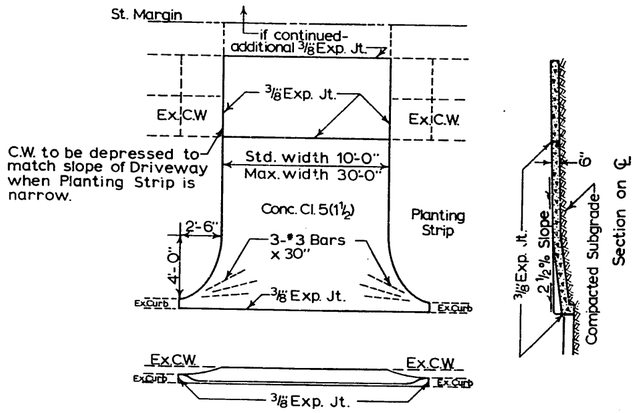

106B-Alternate-2

Curb is not integral with pav. (if Ex. Curb and Base are broken out-Omit Exp. Jts. at Curb.)

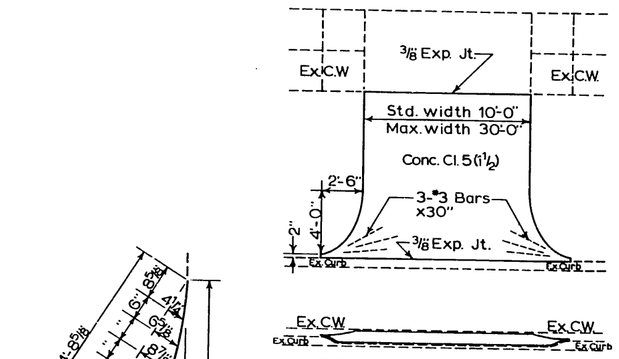

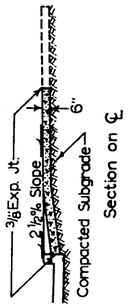

106A-Alternate-1

Curb poured integral with pav.

Standard 1" above Pavement (With narrow Planting strip or where early covering of ex. pav. with 2" Asph. Conc. is planned.-Const. 2" above pav.)

DO NOT SCALE

CITY OF SEATTLE
DEPARTMENT OF ENGINEERING

Type 106 Driveway
Cement Concrete Private

APPROVED BY THE BOARD OF PUBLIC WORKS
JANUARY 8, 1964 CHAIRMAN
ATTEST: SECRETARY

Standard Plan No.107

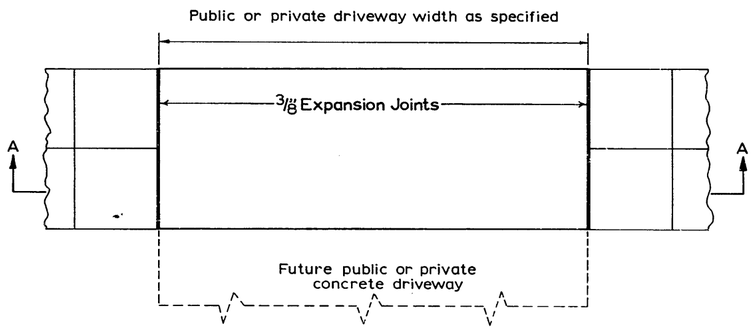

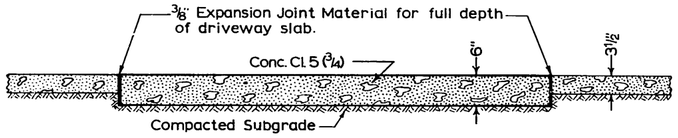

Section A-A

DO NOT SCALE

CITY OF SEATTLE
DEPARTMENT OF ENGINEERING

Concrete Driveway Placed With Sidewalk Construction

APPROVED BY THE BOARD OF PUBLIC WORKS
JANUARY 8, 1964 CHAIRMAN
ATTEST: SECRETARY

Standard Plan No.108

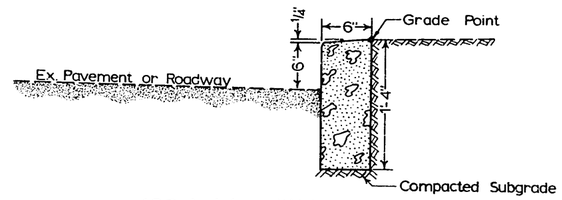

108 A-Monolithic
(For Monolithic Curb and Sidewalk See Std. Plan No. 114.1)

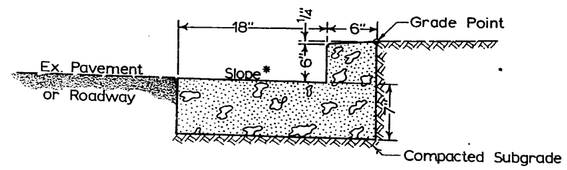

108 B-Curb and Gutter

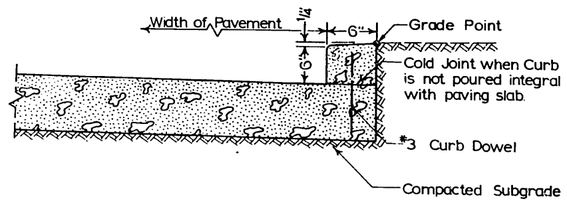

108 C-Integral

For spacing of Contraction Joints see Std. Specs. Sec. 40-3.01F

For Monolithic Curb placed along edge of existing pavement 3/16" Expansion Joints shall be placed for full depth of curb to match location of joints in existing pavement.

*Gutter shall be sloped the same as adjacent pav.

DO NOT SCALE

CITY OF SEATTLE
DEPARTMENT OF ENGINEERING

Type 108 Curbs

APPROVED BY THE BOARD OF PUBLIC WORKS
JANUARY 8, 1964 CHAIRMAN
ATTEST: SECRETARY

Standard Plan No.109

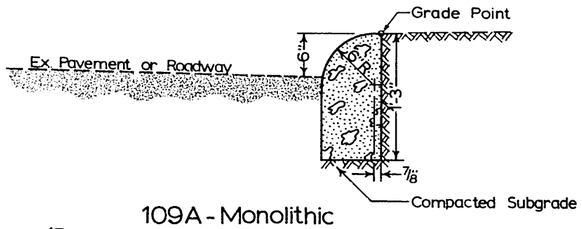

109A - Monolithic
(For Monolithic Curb and Sidewalk See Std. Plan No.114.1)

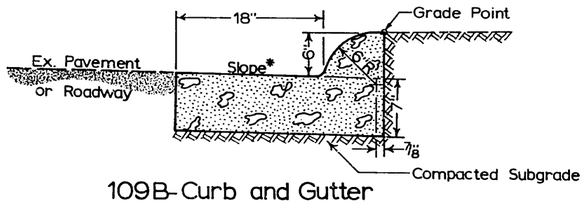

109B-Curb and Gutter

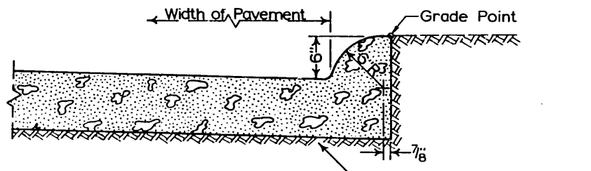

109C-Integral

For Monolithic Curb placed along edge of existing pavement 3/16" Expansion Joints shall be placed for full depth of curb to match location of joints in existing pavement.

For Spacing of Construction Joints see Std. Specs. Sec. 40-3.01F

*Gutter shall be sloped the same as adjacent pav.

DO NOT SCALE

CITY OF SEATTLE
DEPARTMENT OF ENGINEERING

Type 109 Curbs

APPROVED BY THE BOARD OF PUBLIC WORKS
JANUARY 8, 1964 CHAIRMAN
ATTEST: SECRETARY

Standard Plan No.110

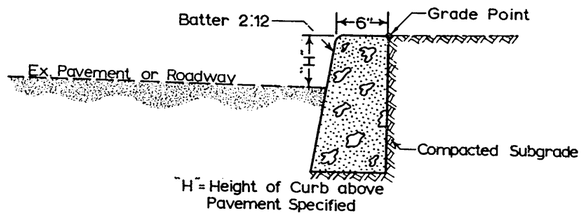

110A - Monolithic
(For Monolithic Curb and Sidewalk See Std. Plan No.114.1)

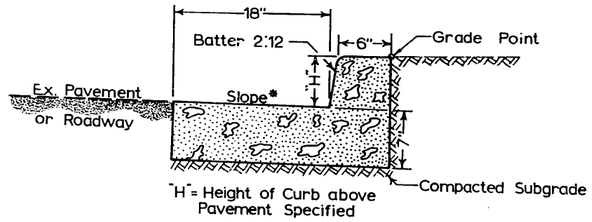

110 B-Curb and Gutter

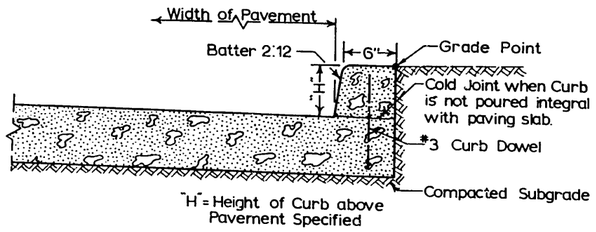

110C-Integral or Dowelled

For spacing of Contraction Joints see Std. Specs. Sec. 40-3.01F

For Monolithic Curb placed along edge of existing pavement 3/16" Expansion Joints shall be placed for full depth of curb to match location of joints in existing pavement.

*Gutter shall be sloped the same as adjacent pav.

DO NOT SCALE

CITY OF SEATTLE
DEPARTMENT OF ENGINEERING

Type 110 Curbs

APPROVED BY THE BOARD OF PUBLIC WORKS
JANUARY 8, 1964 CHAIRMAN
ATTEST: SECRETARY

Standard Plan No.111

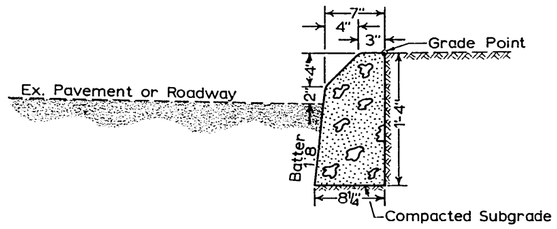

111 A-Monolithic
(For Monolithic Curb and Sidewalk See Std. Plan No.114.1)

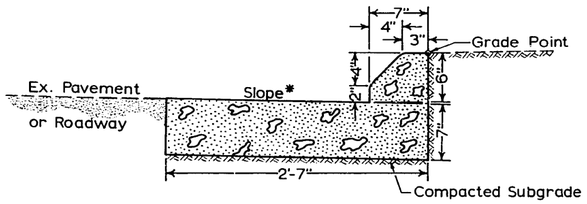

111 B-Curb and Gutter

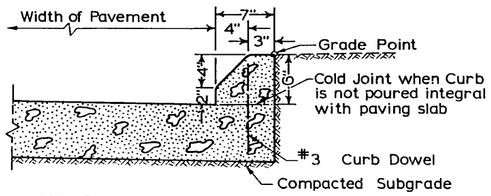

111 C-Integral

For spacing of Contraction Joints see Std. Specs. Sec. 40-3.01F

For Monolithic Curb placed along edge of existing pavement 3/16" Expansion Joints shall be placed for full depth of curb to match location of joints in existing pavement.

* Gutter shall be sloped the same as adjacent pav.

DO NOT SCALE

CITY OF SEATTLE
DEPARTMENT OF ENGINEERING

Type 111 Curbs

APPROVED BY THE BOARD OF PUBLIC WORKS
JANUARY 8, 1964 — CHAIRMAN
ATTEST: — SECRETARY

Standard Plan No.112

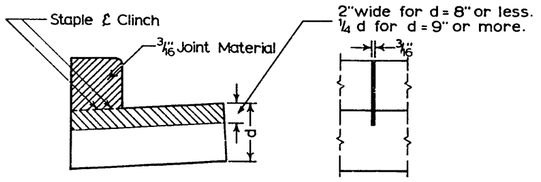

Contraction Joint For Type B
Integral Curb or Curb & Gutter
Other Types of Curbs Vary According to Required X-Section

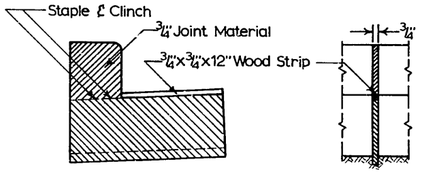

Expansion Joint For Type B
Integral Curb or Curb & Gutter
Other Types of Curbs Vary According to Required X-Section

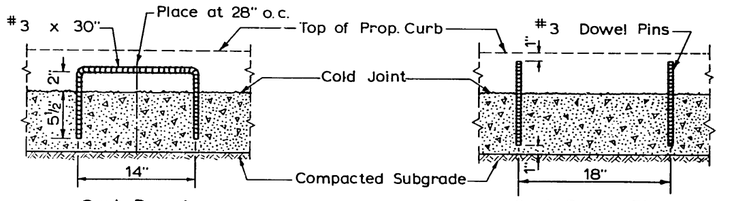

Curb Dowel
For Residential Pavement with a Curb Height of 6"

Curb Dowel Pins
For Arterial Pavement with a Curb Height of 9" or Greater

Dowels For Dowelled Curb Construction

Details as shown for Type 108 Curb. Cut Joint Material to match Type 109, 110 & 111 Curb.

DO NOT SCALE

CITY OF SEATTLE
DEPARTMENT OF ENGINEERING

Joints and Curb Dowels

APPROVED BY THE BOARD OF PUBLIC WORKS
JANUARY 8, 1964 — CHAIRMAN
ATTEST: — SECRETARY

Standard Plan No.113

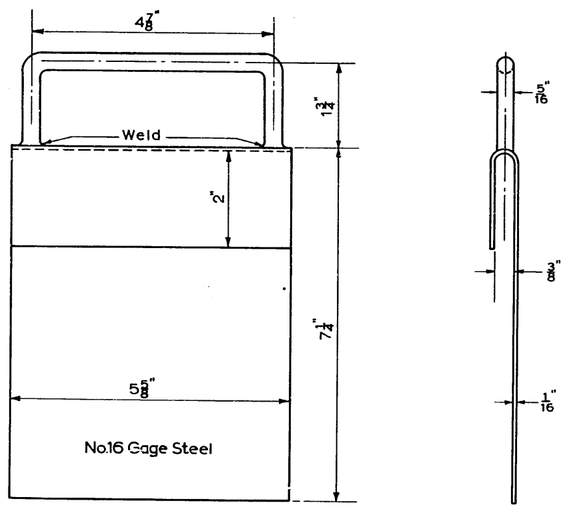

All Steel to be Galvanized after fabrication according to Std. Specs. Sec. 2-7.01.

DO NOT SCALE

CITY OF SEATTLE
DEPARTMENT OF ENGINEERING

Joint Holder

APPROVED BY THE BOARD OF PUBLIC WORKS
JANUARY 8, 1964 CHAIRMAN
ATTEST: SECRETARY

Standard Plan No.114

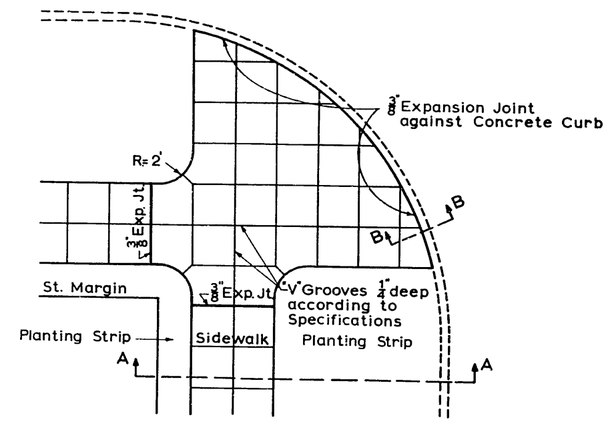

Corner Detail

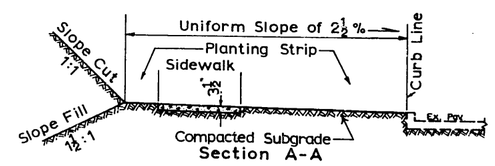

Section A-A

Sidewalk Grading Detail

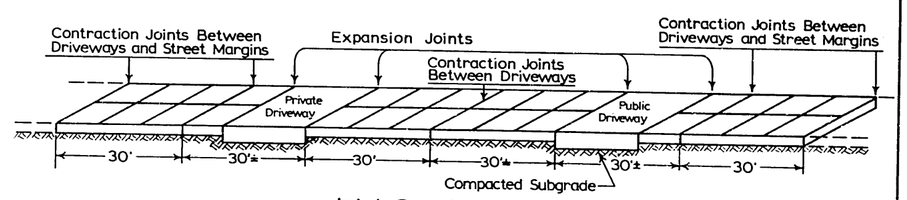

Joint Spacing
See Std. Specs. Sec. 4-11.03

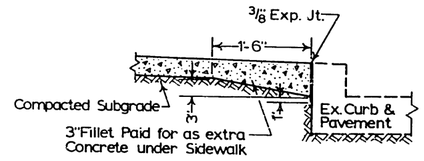

Section B-B

DO NOT SCALE

CITY OF SEATTLE
DEPARTMENT OF ENGINEERING

Sidewalk Details

APPROVED BY THE BOARD OF PUBLIC WORKS
JANUARY 8, 1964 CHAIRMAN
ATTEST: SECRETARY

Standard Plan No. 114

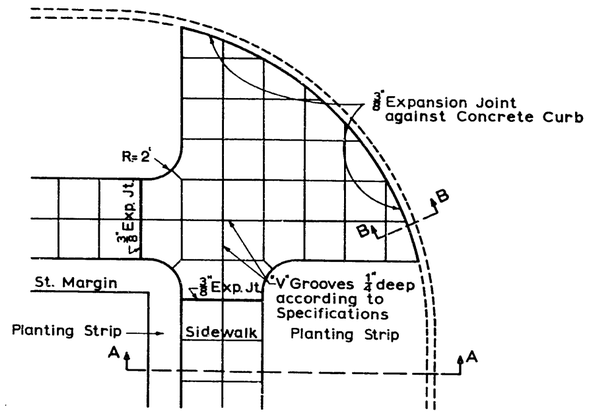

Corner Detail

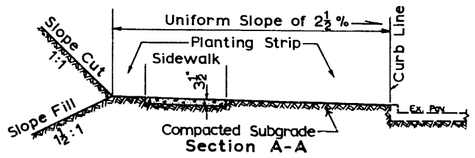

Sidewalk Grading Detail

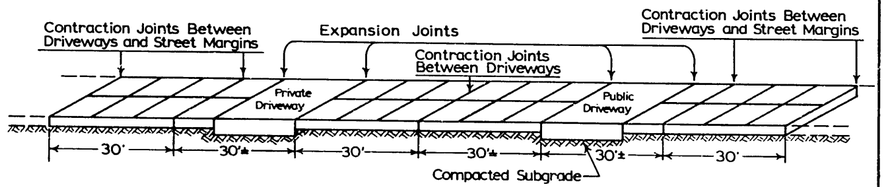

Joint Spacing

See Std. Specs. Sec. 42-3.06

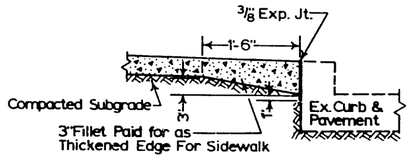

Section B-B

DO NOT SCALE

Revised 1-6-65	CITY OF SEATTLE DEPARTMENT OF ENGINEERING
	Sidewalk Details
	APPROVED BY THE BOARD OF PUBLIC WORKS JANUARY 8, 1964 CHAIRMAN ATTEST: SECRETARY

Standard Plan No. 114

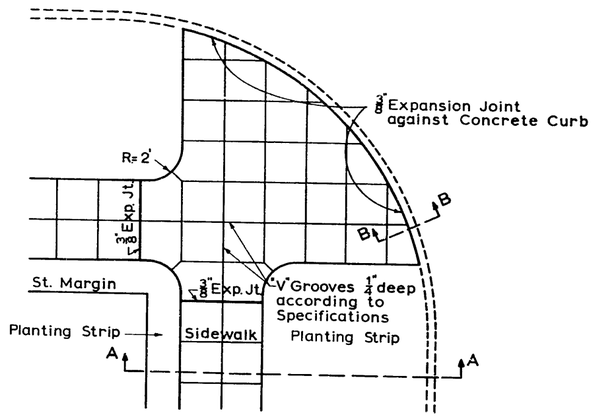

Corner Detail

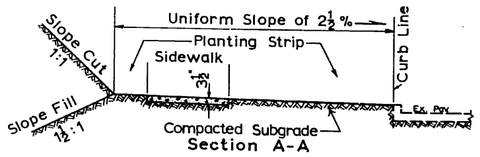

Sidewalk Grading Detail

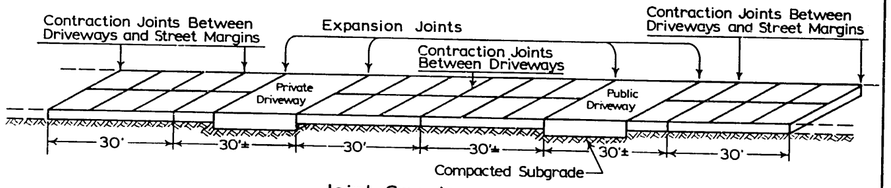

Joint Spacing

See Std. Specs. Sec. 4-11.03

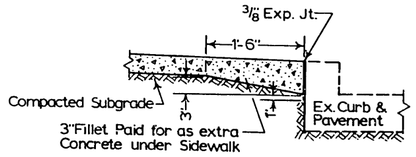

Section B-B

DO NOT SCALE

CITY OF SEATTLE DEPARTMENT OF ENGINEERING
Sidewalk Details
APPROVED BY THE BOARD OF PUBLIC WORKS JANUARY 8, 1964 CHAIRMAN ATTEST: SECRETARY

Standard Plan No. 114.1

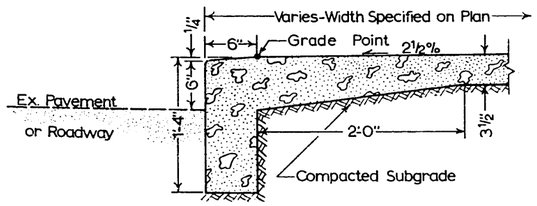

114.1 A-Type 108 Curb

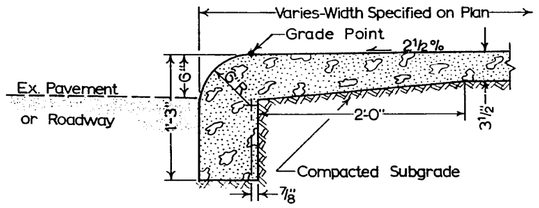

114.1 B-Type 109 Curb

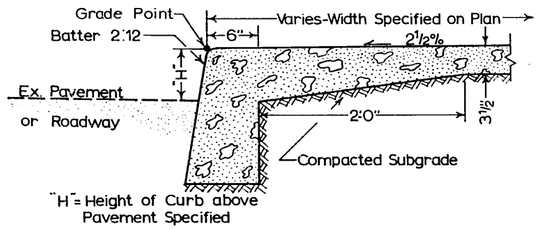

114.1 C-Type 110 Curb

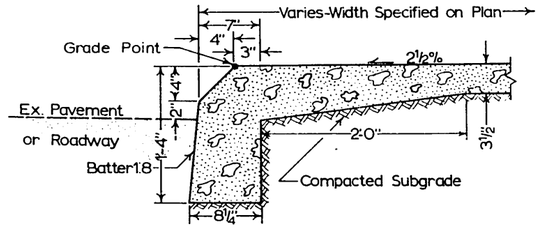

D-Type 111 Curb

DO NOT SCALE

Vertical Backface of Curb shall be formed against native earth where practical otherwise by Backform left in place.

Surface marking of C.W. begins from longitudinal Curb marking 6" from Face of Curb.

CITY OF SEATTLE
DEPARTMENT OF ENGINEERING

Monolithic Curb and Sidewalk

APPROVED BY THE BOARD OF PUBLIC WORKS
JANUARY 8, 1964 — CHAIRMAN
ATTEST: — SECRETARY

Standard Plan No. 115

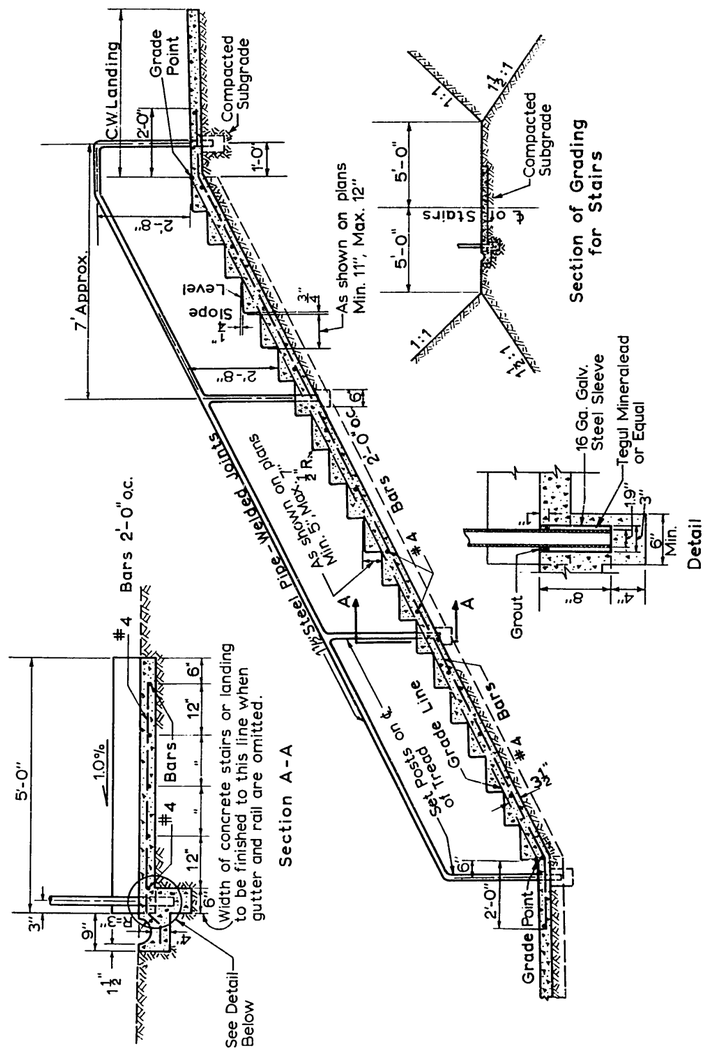

All Steel to be Galvanized after fabrication according to Std. Specs. Sec. 2-7.01.

DO NOT SCALE

CITY OF SEATTLE
DEPARTMENT OF ENGINEERING

Cement Concrete Stairway Construction Details

APPROVED BY THE BOARD OF PUBLIC WORKS
JANUARY 8, 1964 — CHAIRMAN
ATTEST: — SECRETARY

Standard Plan No.115

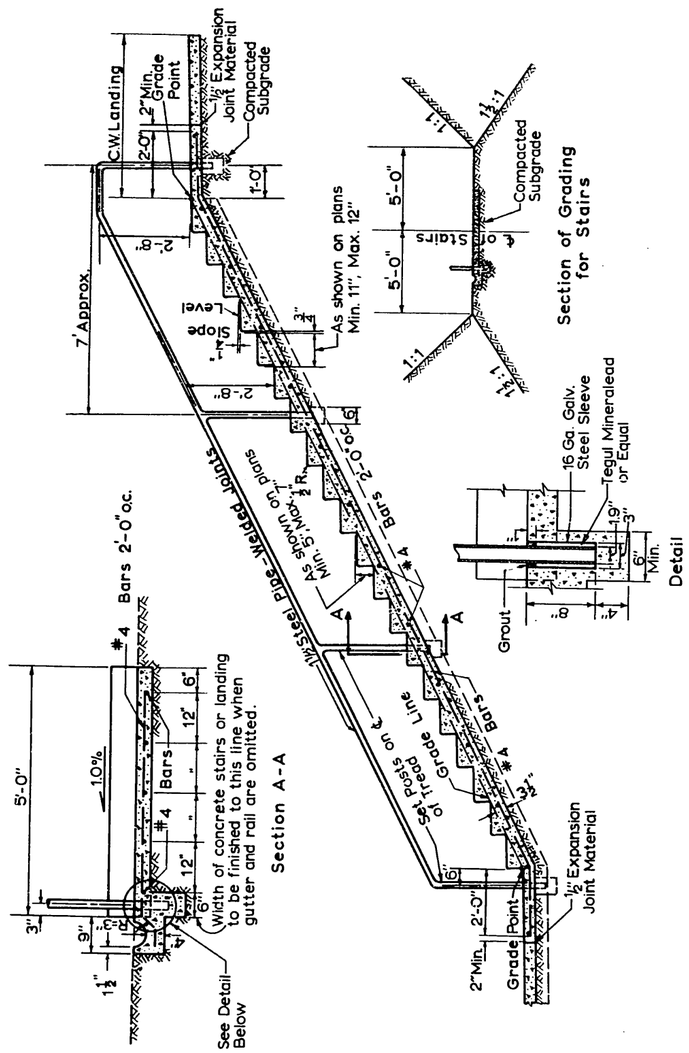

All Steel to be Galvanized after fabrication according to Std. Specs. Sec. 38-2.

DO NOT SCALE

Revised 1-6-65	CITY OF SEATTLE DEPARTMENT OF ENGINEERING
	Cement Concrete Stairway Construction Details
	APPROVED BY THE BOARD OF PUBLIC WORKS JANUARY 8, 1964 _____ CHAIRMAN ATTEST: _____ SECRETARY

Standard Plan No.115

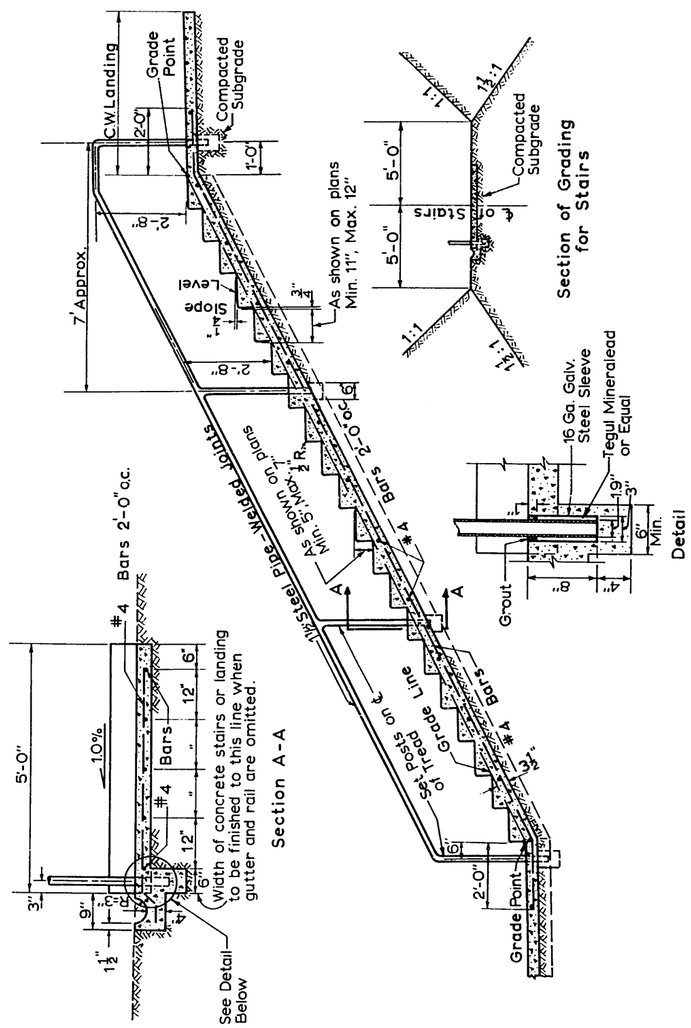

All Steel to be Galvanized after fabrication according to Std. Specs. Sec. 2-7.01.

DO NOT SCALE

CITY OF SEATTLE DEPARTMENT OF ENGINEERING
Cement Concrete Stairway Construction Details
APPROVED BY THE BOARD OF PUBLIC WORKS JANUARY 8, 1964 _____ CHAIRMAN ATTEST: _____ SECRETARY

Standard Plan No. 116

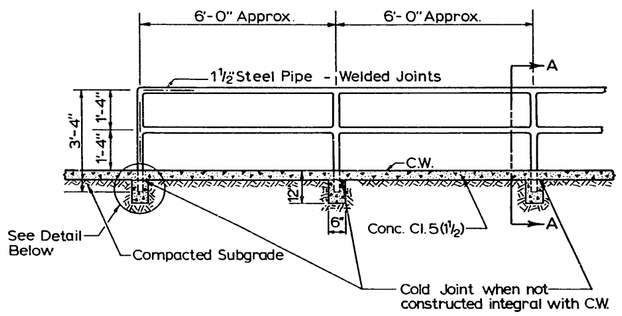

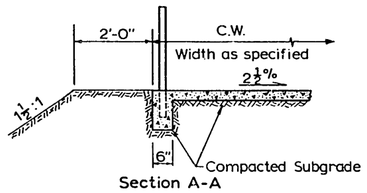

Section A-A

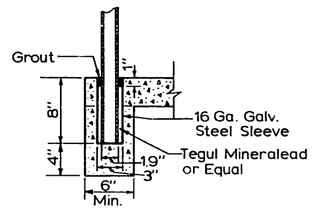

Detail

All Steel to be Galvanized after fabrication according to Std. Specs. Sec. 2.7.01.

DO NOT SCALE

CITY OF SEATTLE
DEPARTMENT OF ENGINEERING

Steel Pipe Handrail Construction Details

APPROVED BY THE BOARD OF PUBLIC WORKS
JANUARY 8, 1964 — CHAIRMAN
ATTEST: — SECRETARY

Standard Plan No. 117

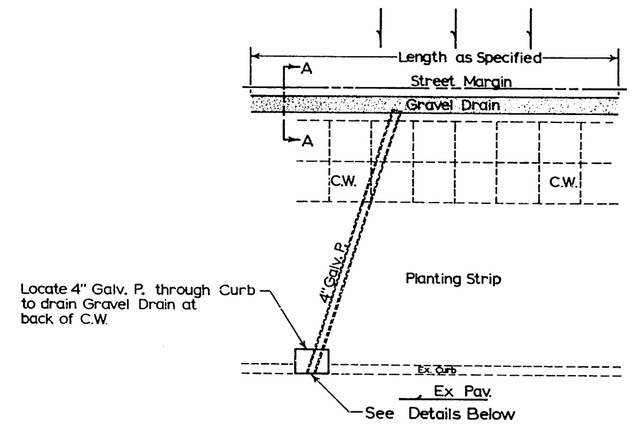

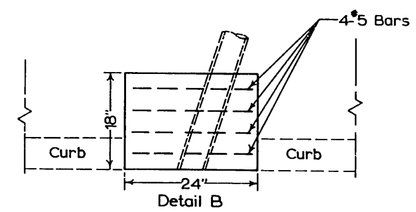

Detail B

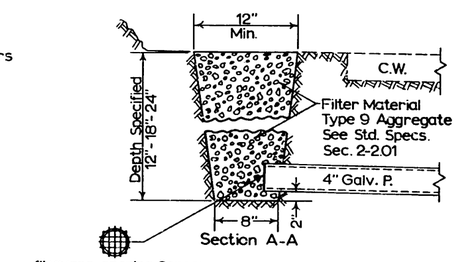

Section A-A

1" square opening Screen over end of 4" Galv. P.

Detail C

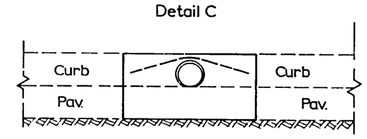

Detail D

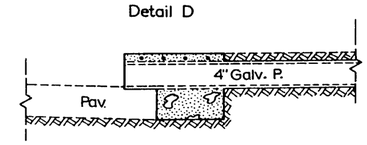

When Curb is existing remove and replace as shown.

DO NOT SCALE

CITY OF SEATTLE
DEPARTMENT OF ENGINEERING

Sidewalk Drain

APPROVED BY THE BOARD OF PUBLIC WORKS
JANUARY 8, 1964 — CHAIRMAN
ATTEST: — SECRETARY

Standard Plan No. 116

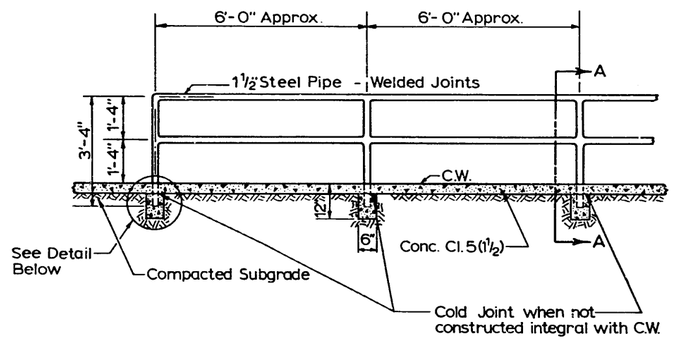

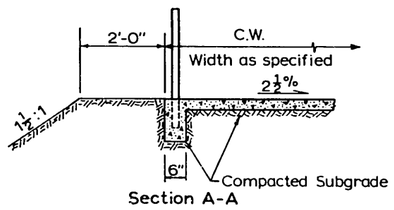

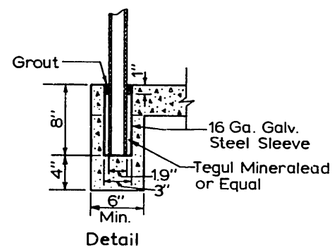

All Steel to be Galvanized after fabrication according to Std. Specs. Sec. 38-2.

DO NOT SCALE

Revised 1-6-65	CITY OF SEATTLE DEPARTMENT OF ENGINEERING
	Steel Pipe Handrail Construction Details
	APPROVED BY THE BOARD OF PUBLIC WORKS JANUARY 8, 1964 CHAIRMAN ATTEST: SECRETARY

Standard Plan No. 117

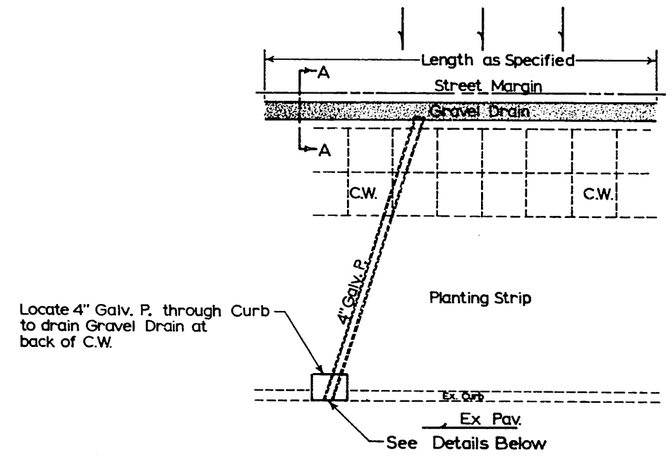

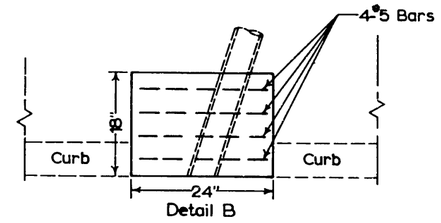

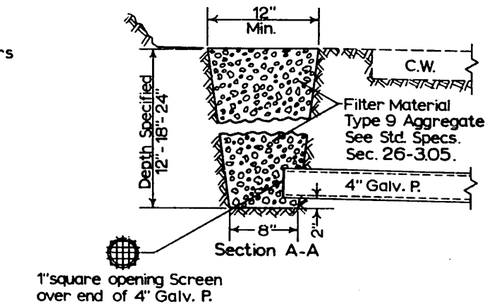

Detail C

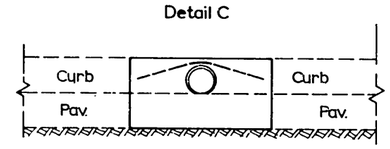

Detail D

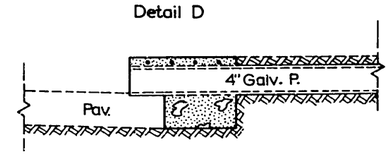

When Curb is existing remove and replace as shown.

DO NOT SCALE

Revised 1-6-65	CITY OF SEATTLE DEPARTMENT OF ENGINEERING
	Sidewalk Drain
	APPROVED BY THE BOARD OF PUBLIC WORKS JANUARY 8, 1964 CHAIRMAN ATTEST: SECRETARY

Standard Plan No.118

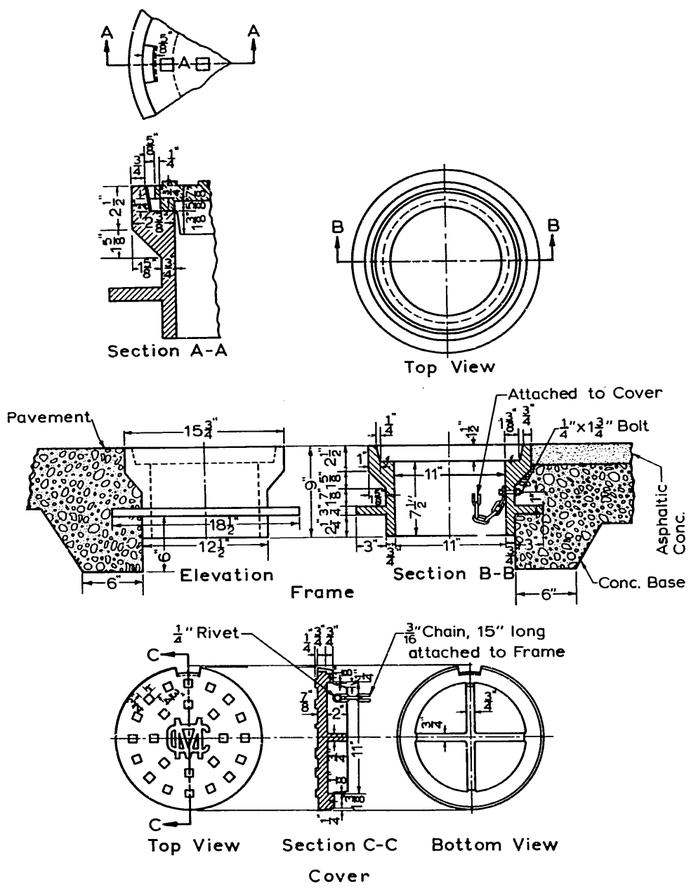

Frame and Cover shall be tested for accuracy of fit and shall be marked in sets for delivery. See Std. Specs. Sec. 113.

All Castings to have a bituminous coating according to Std. Specs. Sec. 63.208.

DO NOT SCALE

CITY OF SEATTLE
DEPARTMENT OF ENGINEERING

Monument Case

APPROVED BY THE BOARD OF PUBLIC WORKS
JANUARY 8, 1964 CHAIRMAN
ATTEST: SECRETARY

Standard Plan No.119

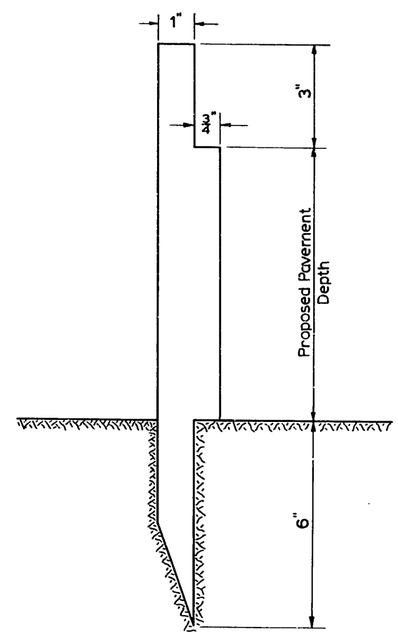

DO NOT SCALE

CITY OF SEATTLE
DEPARTMENT OF ENGINEERING

Intersection Grade Stake

APPROVED BY THE BOARD OF PUBLIC WORKS
JANUARY 8, 1964 CHAIRMAN
ATTEST: SECRETARY

Standard Plan No.118

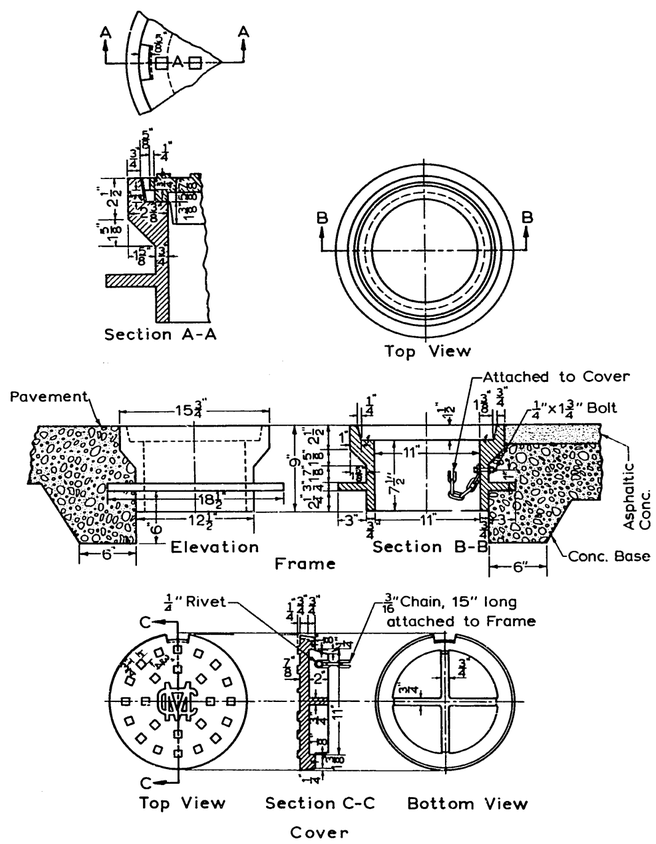

Frame and Cover shall be tested for accuracy of fit and shall be marked in sets for delivery. See Std. Specs. Sec. 113.

All Castings to have a bituminous coating according to Std. Specs. Sec. 63.208.

DO NOT SCALE

CITY OF SEATTLE
DEPARTMENT OF ENGINEERING

Monument Case

APPROVED BY THE BOARD OF PUBLIC WORKS
JANUARY 8, 1964 CHAIRMAN
ATTEST: SECRETARY

Standard Plan No.119

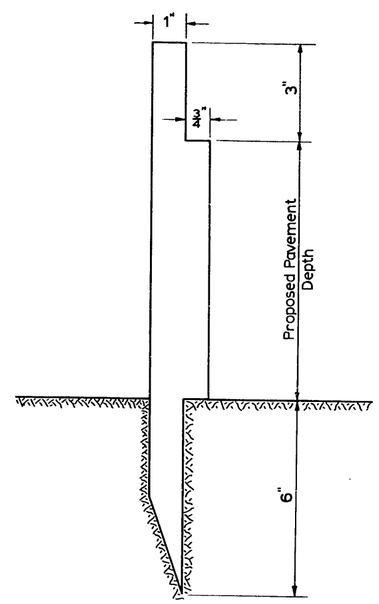

DO NOT SCALE

CITY OF SEATTLE
DEPARTMENT OF ENGINEERING

Intersection Grade Stake

APPROVED BY THE BOARD OF PUBLIC WORKS
JANUARY 8, 1964 CHAIRMAN
ATTEST: SECRETARY

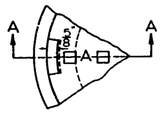

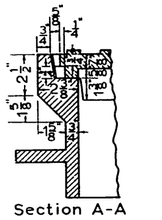

Section A-A

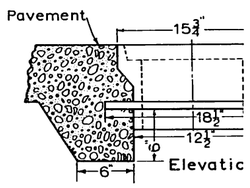

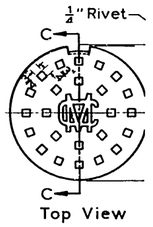

Top View

There is no
Standard Plan #120
in the book
at the time of filming.

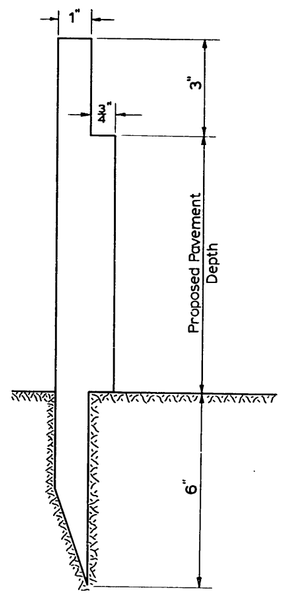

Frame and Cover shall be tested for accura
shall be marked in sets for delivery. See S
113.

All Castings to have a bituminous coating ac
Specs. Sec. 63.208.

DO NOT SCALE

CITY OF SEATTLE
DEPARTMENT OF ENGINEERING

Intersection Grade Stake

APPROVED BY THE BOARD OF PUBLIC WORKS
JANUARY 8, 1964 CHAIRMAN
ATTEST: SECRETARY

Standard Plan No. 121

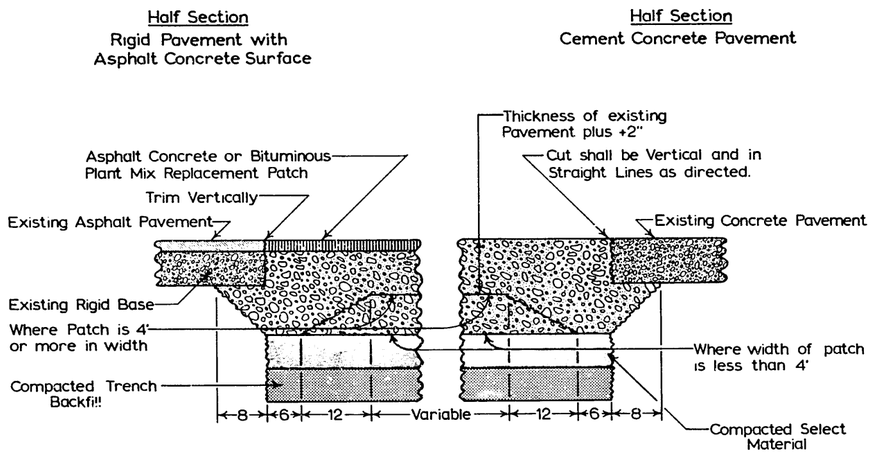

Typical Patch for Rigid Pavement

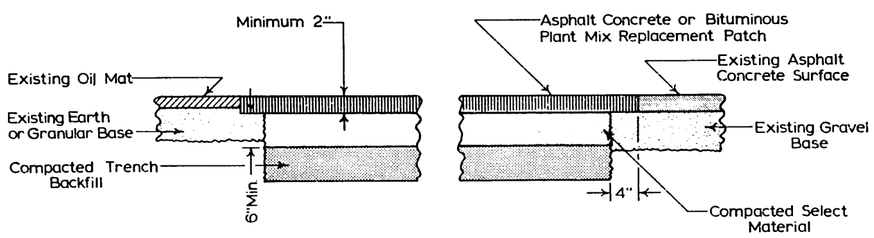

Typical Patch for Flexible Pavement

DO NOT SCALE

CITY OF SEATTLE
DEPARTMENT OF ENGINEERING

Pavement Patching

APPROVED BY THE BOARD OF PUBLIC WORKS
JANUARY 8, 1964 CHAIRMAN
ATTEST: SECRETARY

Standard Plan No. 122

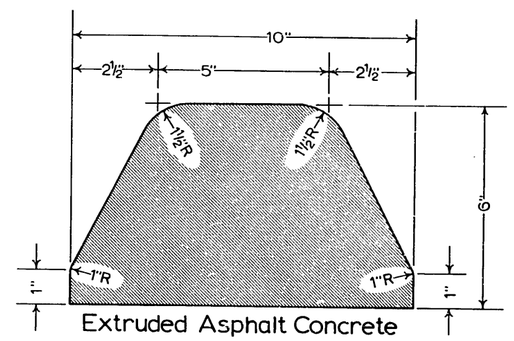

Extruded Asphalt Concrete

DO NOT SCALE

CITY OF SEATTLE
DEPARTMENT OF ENGINEERING

Type 122 Curb
Extruded Asphalt Concrete

APPROVED BY THE BOARD OF PUBLIC WORKS
JANUARY 8, 1964 CHAIRMAN
ATTEST: SECRETARY

Standard Plan No. 123

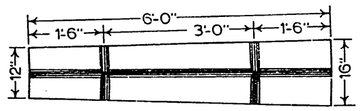

123 A-1 Connecting Divider

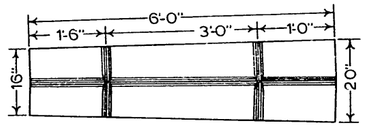

123 A-2 Connecting Divider

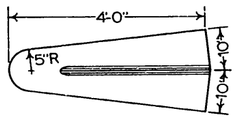

123 A Nosing

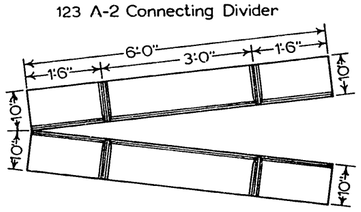

123 A Straight Section

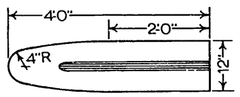

123 C Nosing

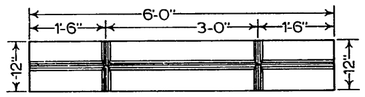

123 C Curb

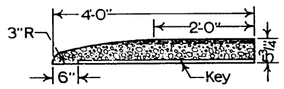

Section A & C Nosing

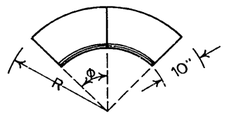

123 A Radial Curb
See Table Below Left

The main body of the curb and the longitudinal rib shall form a uniform transition from a type C section to a type A (back to back) section.

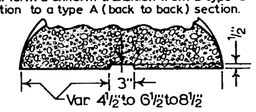

Section-A Connecting Dividers

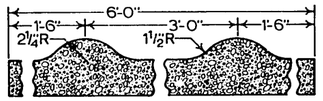

Longitudinal Section Thru Transverse Ribs

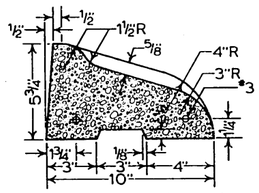

Section-A Straight Curb

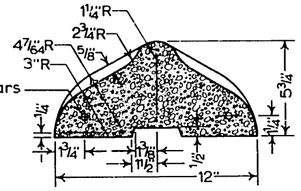

Section-C Curb

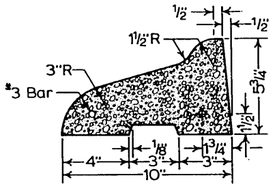

Section-A Radial Curb

DO NOT SCALE

123 A Radial Curb		
Unit	Radius	Curb Return Angle (φ) Multiple
R1	1'-3"	45°00'
R2	1'-10"	30°00'
R3	2'-6"	22°30'
R4	5'-0"	11°27.54'
R5	10'-0"	5°43.77'
For Radii greater than 10' use segments of straight curb.		

CITY OF SEATTLE
DEPARTMENT OF ENGINEERING

Type 123 Traffic Curbs
Precast Cement Concrete

APPROVED BY THE BOARD OF PUBLIC WORKS
JANUARY 8, 1964 — CHAIRMAN
ATTEST: — SECRETARY

Standard Plan No. 124

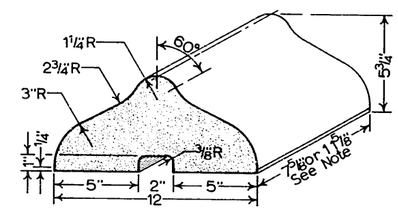

124 C-Block

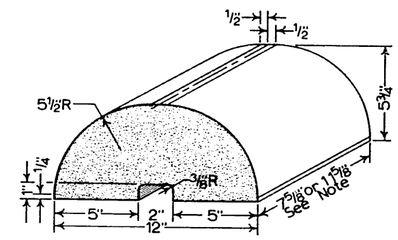

124 C-Reflector Block

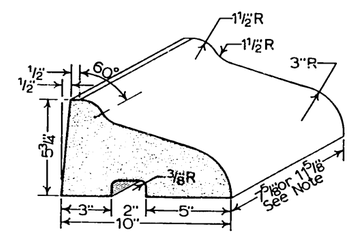

124 A-Block

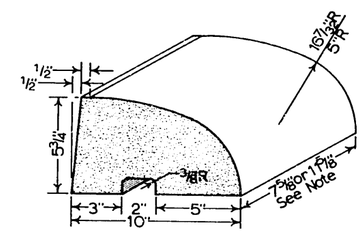

124 C-Reflector Block

With 7⅝" Blocks every sixth Block shall be a Reflector Block.

With 11⅝" Blocks every fourth Block shall be a Reflector Block

DO NOT SCALE

CITY OF SEATTLE
DEPARTMENT OF ENGINEERING

Type 124 Traffic Curbs
Block-Precast Cement Concrete

APPROVED BY THE BOARD OF PUBLIC WORKS
JANUARY 8, 1964 — CHAIRMAN
ATTEST: — SECRETARY

Standard Plan No. 125

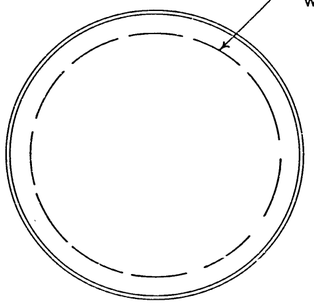

Plan
Type 125 A

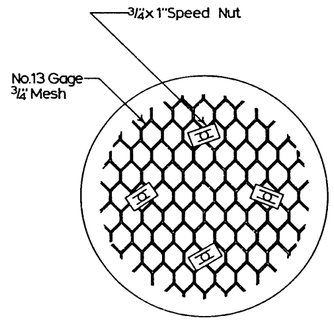

Bottom View
Type 125 B

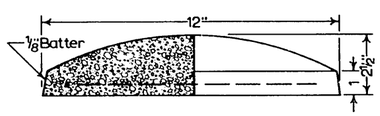

Half Section

Precast Cement Concrete

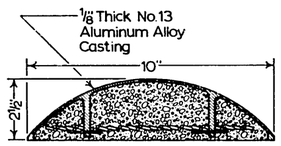

Section

Aluminum Covered

DO NOT SCALE

CITY OF SEATTLE
DEPARTMENT OF ENGINEERING

Type 125
Traffic Buttons

APPROVED BY THE BOARD OF PUBLIC WORKS
JANUARY 8, 1964 — CHAIRMAN
ATTEST: — SECRETARY

Standard Plan No.126

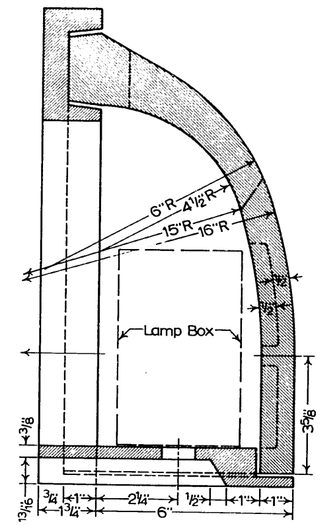

Section A-A

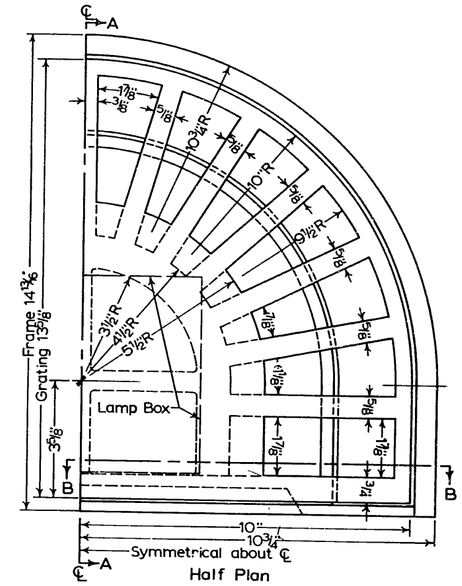

Half Plan

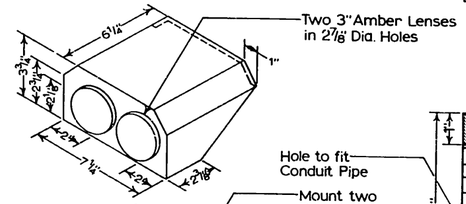

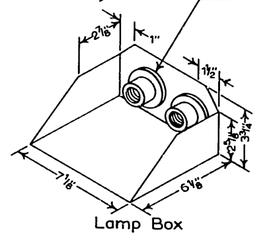

Lamp Box

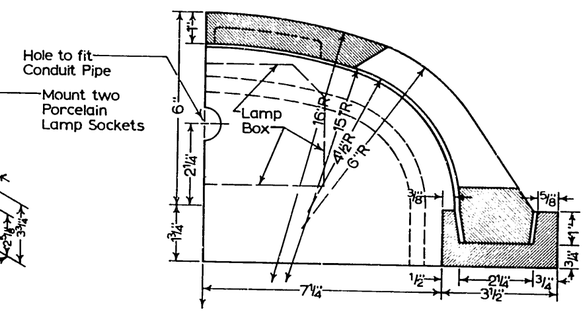

Section B-B

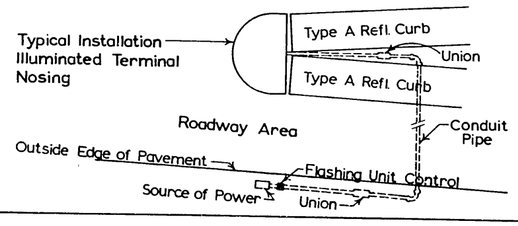

CITY OF SEATTLE
DEPARTMENT OF ENGINEERING

Type 126 Terminal Nosing
Illuminated

APPROVED BY THE BOARD OF PUBLIC WORKS
JANUARY 8, 1964 — CHAIRMAN
ATTEST: — SECRETARY

Standard Plan No.127

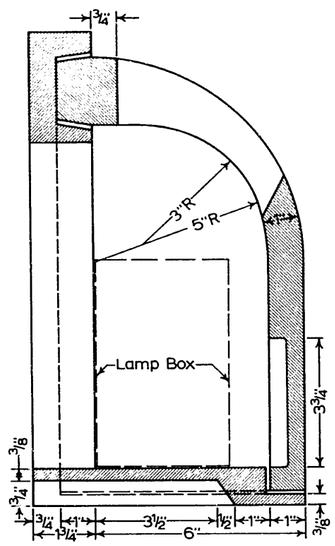

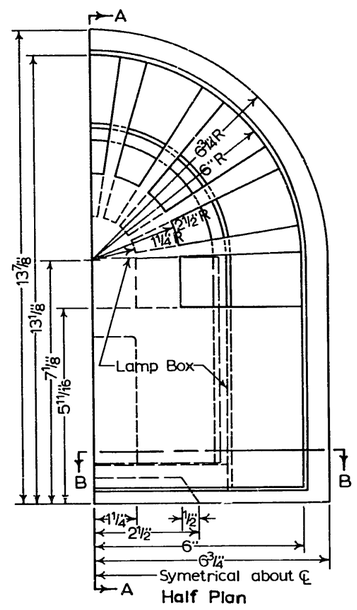

Half Plan

Section A-A

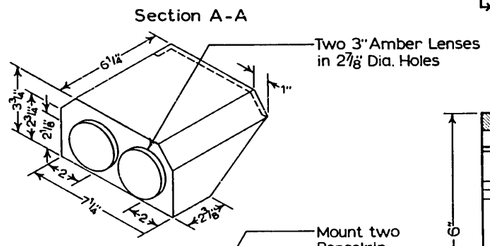

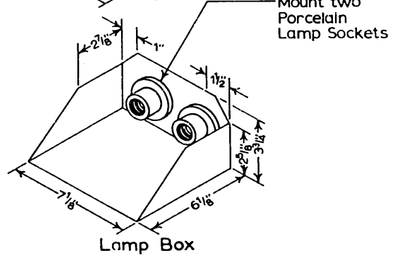

Lamp Box

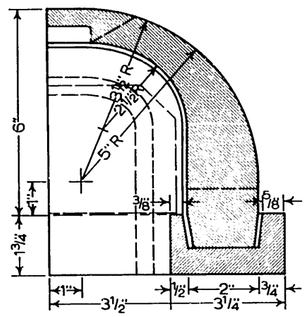

Section B-B

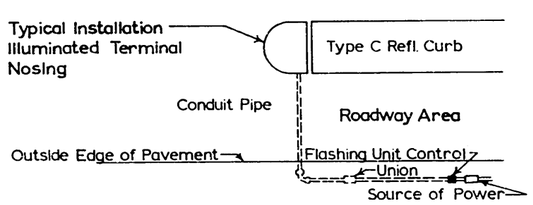

CITY OF SEATTLE
DEPARTMENT OF ENGINEERING

Type 127 Terminal Nosing
Illuminated

APPROVED BY THE BOARD OF PUBLIC WORKS
JANUARY 8, 1964 CHAIRMAN
ATTEST: SECRETARY

Standard Plan No. 128

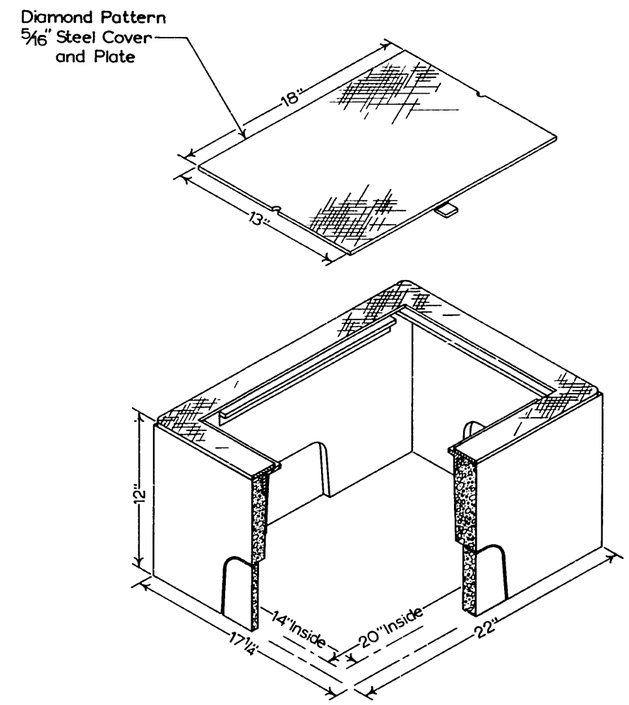

Based on Fog-Tite Meter Seal Co. Design

For Alternate see Standard Plan No. 128.1

DO NOT SCALE

CITY OF SEATTLE
DEPARTMENT OF ENGINEERING

Type 128 Pull Box
Precast

APPROVED BY THE BOARD OF PUBLIC WORKS
JANUARY 8, 1964 CHAIRMAN
ATTEST: SECRETARY

Standard Plan No.128.1

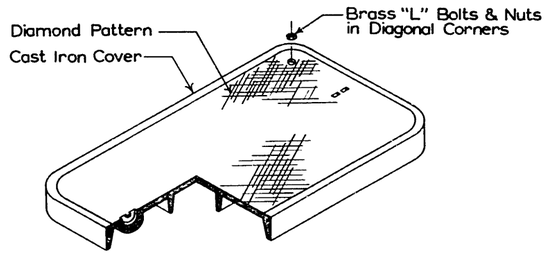

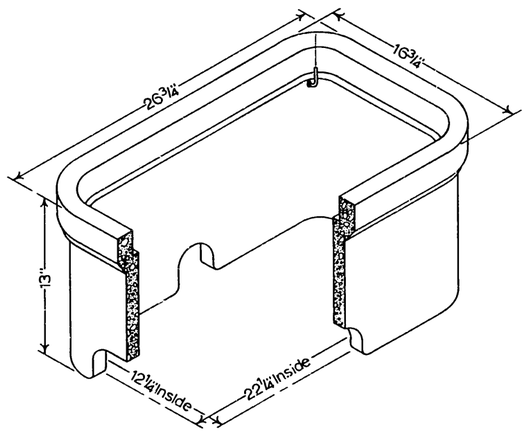

Based on Brooks Products, Inc. Design

For Alternate see Standard Plan No. 128

DO NOT SCALE

CITY OF SEATTLE
DEPARTMENT OF ENGINEERING

Type 128.1 Pull Box
Precast

APPROVED BY THE BOARD OF PUBLIC WORKS
JANUARY 8, 1964 CHAIRMAN
ATTEST: SECRETARY

Standard Plan No.129

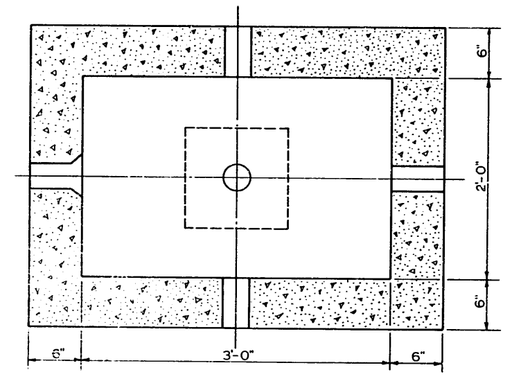

Section A-A

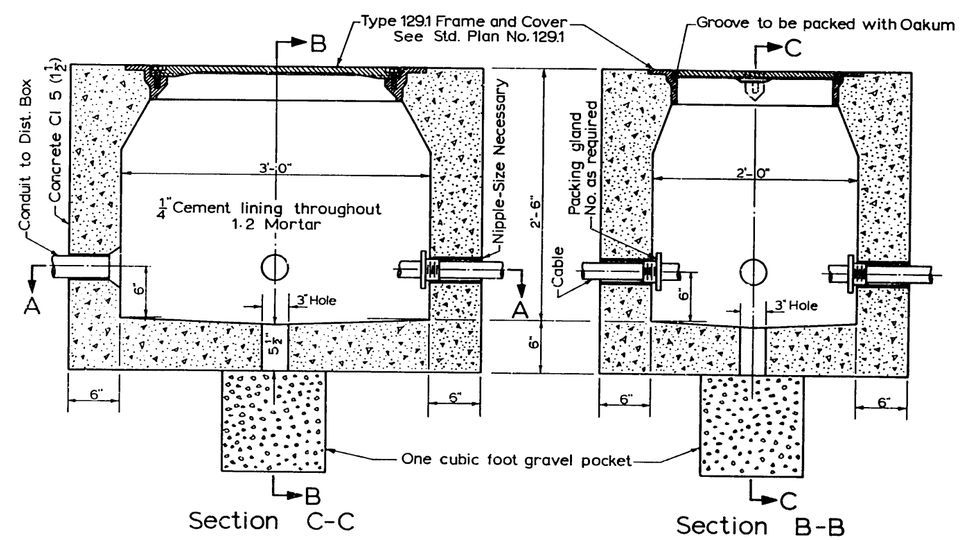

Section C-C

Section B-B

DO NOT SCALE

CITY OF SEATTLE
DEPARTMENT OF ENGINEERING

Type 129 Conc. Junction Box
Cast in Place

APPROVED BY THE BOARD OF PUBLIC WORKS
JANUARY 8, 1964 CHAIRMAN
ATTEST: SECRETARY

Standard Plan No. 129.1

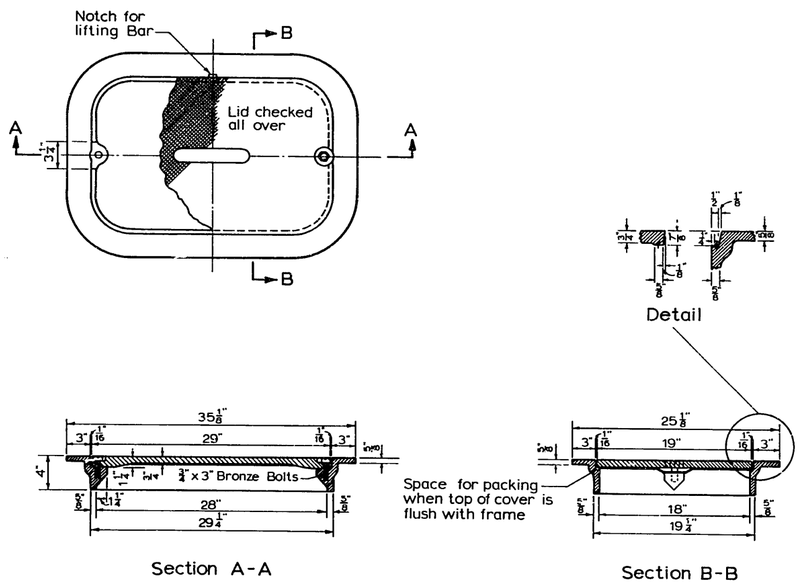

Section A-A

Section B-B

For use with Type 129 Junction Box.

Frame and Cover shall be tested for accuracy of fit and marked in sets for delivery. See Std. Specs. Sec. 63.208.

All Castings to have a bituminous coating according to Std. Specs. Sec. 63.208.

DO NOT SCALE

CITY OF SEATTLE
DEPARTMENT OF ENGINEERING

Type 129.1 Frame and Cover for Junction Box

APPROVED BY THE BOARD OF PUBLIC WORKS
JANUARY 8, 1964 CHAIRMAN
ATTEST: SECRETARY

Standard Plan No. 130

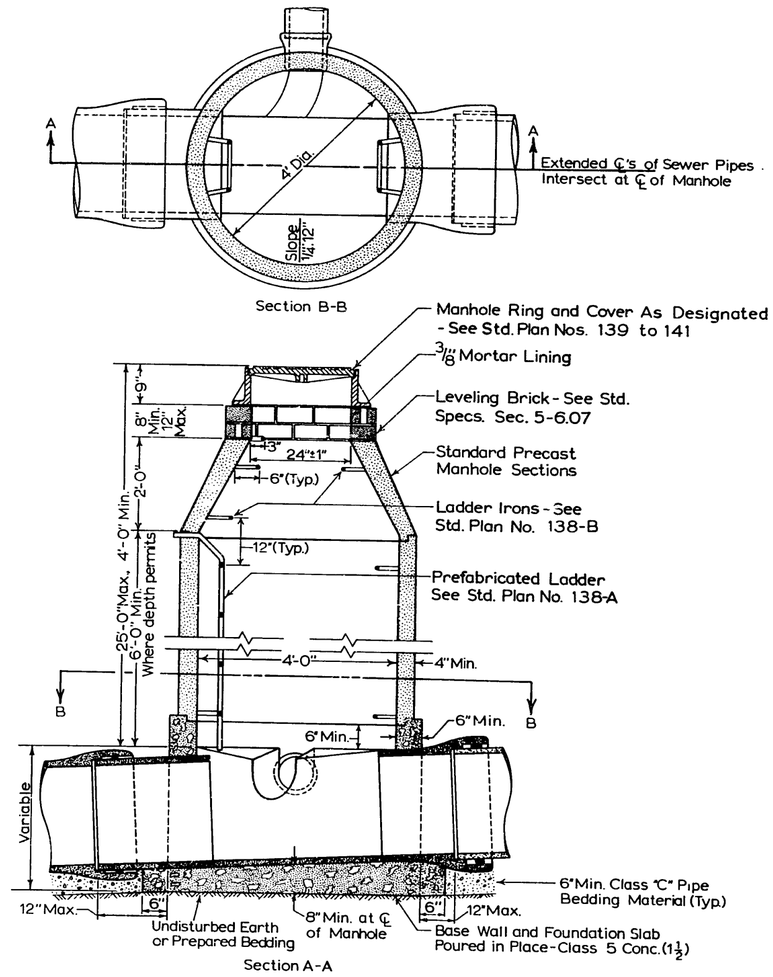

Max. Pipe Dia. 24"

Unit, as shown, is precast construction - optional construction may be brick, conc. block or cast-in-place at contractor's option, unless otherwise specified on plan.

Construct manholes in accordance with Section 63 of the Std. Specifications.

Base walls all cast-in-place for 12" and larger pipe.

Allow flexible joints of unreinforced pipe to deflect. No concrete on, around or under joint.

All lift holes and joints to be filled with mortar.

DO NOT SCALE

CITY OF SEATTLE
DEPARTMENT OF ENGINEERING

Type 130 Manhole

APPROVED BY THE BOARD OF PUBLIC WORKS
JANUARY 8, 1964 CHAIRMAN
ATTEST: SECRETARY

Standard Plan No. 130

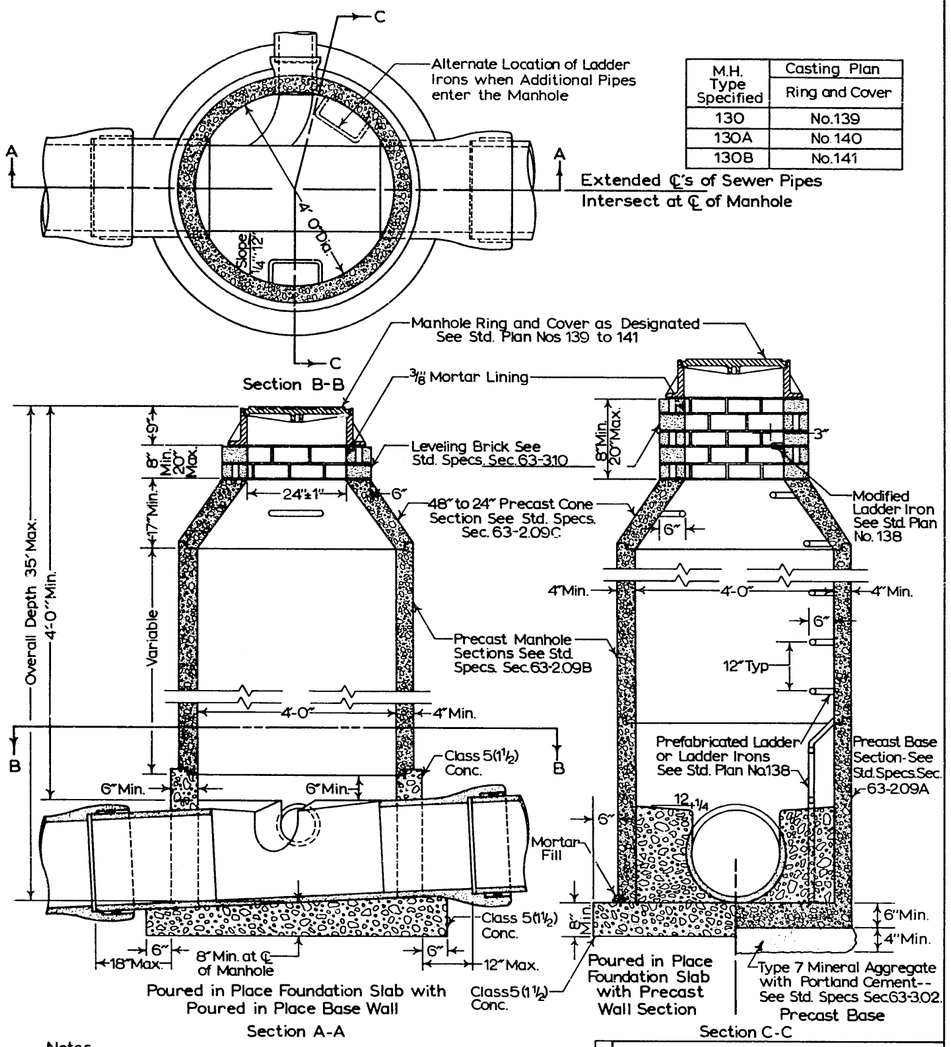

M.H. Type Specified	Casting Plan Ring and Cover
130	No. 139
130A	No. 140
130B	No. 141

Notes

1. Maximum Pipe Diameter=21"
2. See Std. Specs. Sec. 63 for further requirements.
3. When overall depth of Manhole is less than 7'-0" a Type 134 Manhole may be substituted for the Type 130 Manhole.
4. For Manholes constructed of alternate materials see Std. Plan No. 131.

1-6-65

Revised

CITY OF SEATTLE
DEPARTMENT OF ENGINEERING

Type 130 Manhole

APPROVED BY THE BOARD OF PUBLIC WORKS
JANUARY 8, 1964 — CHAIRMAN
ATTEST: — SECRETARY

Standard Plan No. 130

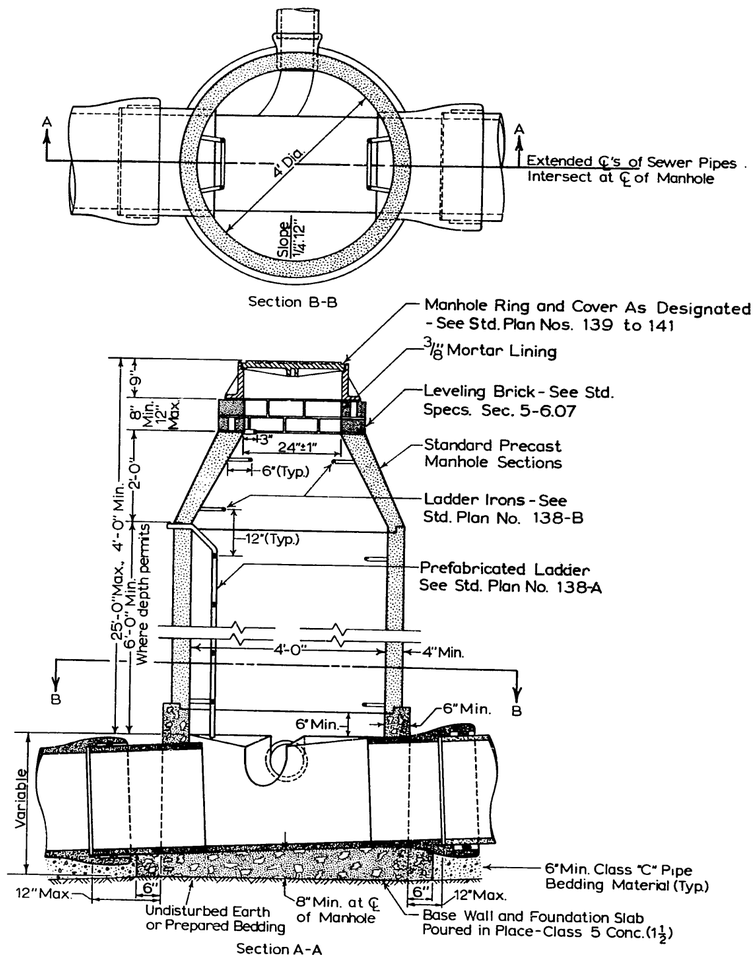

Unit, as shown, is precast construction - optional construction may be brick, conc. block or cast-in-place at contractor's option, unless otherwise specified on plan.

Construct manholes in accordance with Section 63 of the Std. Specifications.

Base walls all cast-in-place for 12" and larger pipe.

Allow flexible joints of unreinforced pipe to deflect. No concrete on, around or under joint.

All lift holes and joints to be filled with mortar.

Max. Pipe Dia. 24"

DO NOT SCALE

CITY OF SEATTLE
DEPARTMENT OF ENGINEERING

Type 130 Manhole

APPROVED BY THE BOARD OF PUBLIC WORKS
JANUARY 8, 1964 — CHAIRMAN
ATTEST: — SECRETARY

Standard Plan No. 131

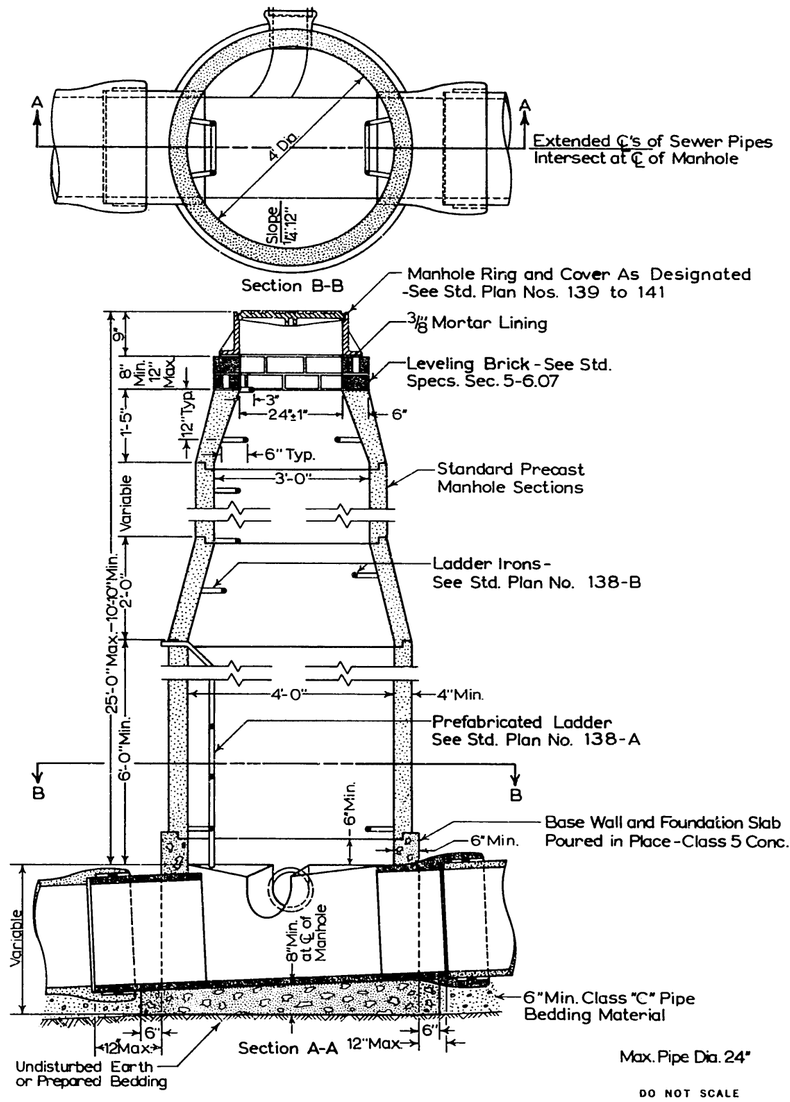

Max. Pipe Dia. 24"

DO NOT SCALE

Unit, as shown, is precast construction - optional construction may be brick, conc. block or cast-in-place at contractor's option, unless otherwise specified on plan.

Construct manholes in accordance with Section 63 of the Std. Specifications.

Base walls all cast-in-place for 12" and larger pipe.

Allow flexible joints of unreinforced pipe to deflect. No concrete on, around or under joint.

All lift holes and joints to be filled with mortar.

CITY OF SEATTLE
DEPARTMENT OF ENGINEERING

Type 131 Manhole

APPROVED BY THE BOARD OF PUBLIC WORKS
JANUARY 8, 1964 — CHAIRMAN
ATTEST: — SECRETARY

Standard Plan No. 132

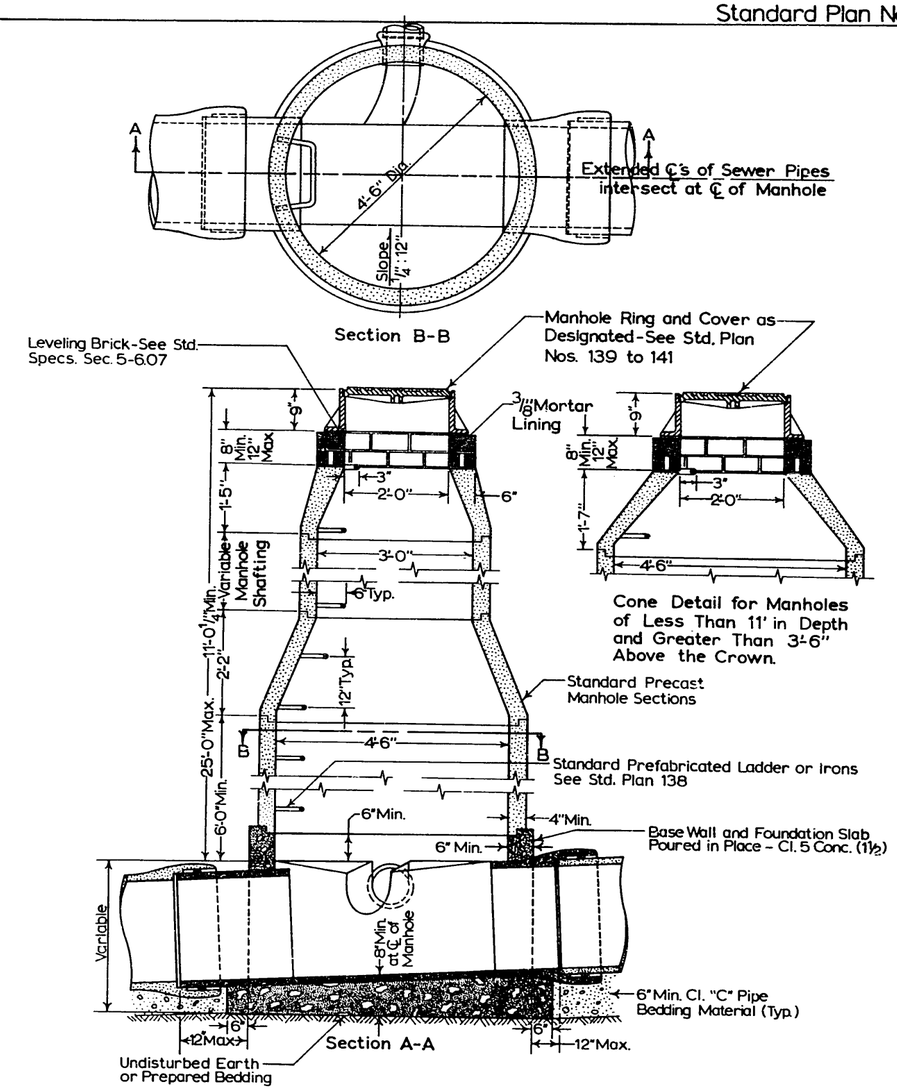

Max. Pipe Dia. 24"

DO NOT SCALE

Unit, as shown, is precast construction - optional construction may be brick, conc. block or cast-in place at contractor's option, unless otherwise specified on plan.

Construct manholes in accordance with Section 63 of the Std. Specifications.

Base walls all cast-in-place for 12" and larger pipe.

Allow flexible joints of unreinforced pipe to deflect. No concrete on, around or under joint.

All lift holes and joints to be filled with mortar.

CITY OF SEATTLE
DEPARTMENT OF ENGINEERING

Type 132 Manhole

APPROVED BY THE BOARD OF PUBLIC WORKS
JANUARY 8, 1964 — CHAIRMAN
ATTEST: — SECRETARY

Standard Plan No.131

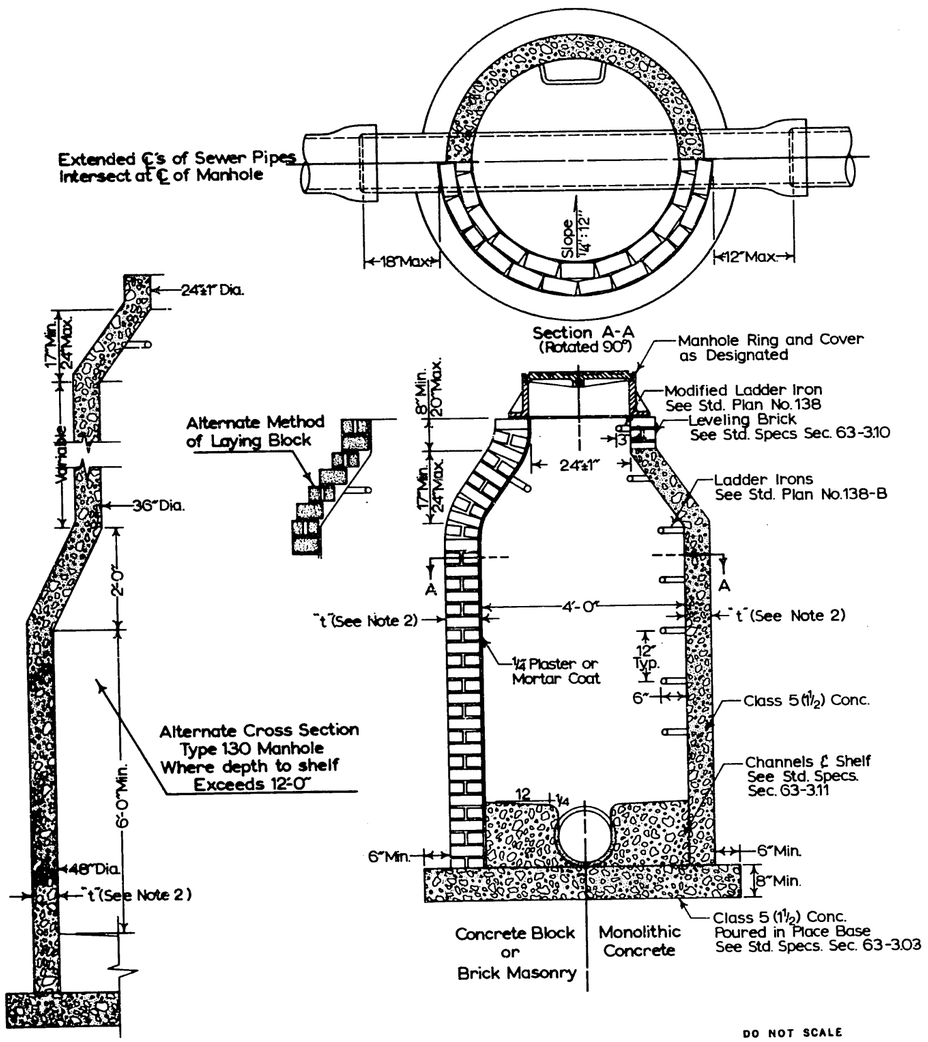

DO NOT SCALE

Notes

1. Inside dimensions of Manhole shall conform to dimensions of the Type Manhole designated.
2. Values of "t"
   Cement Concrete t=6"
   Concrete Blocks t=6"
   Brick t=8"
3. See Std. Specs. Sec. 63 for further requirements.

Revised 1-6-65	CITY OF SEATTLE DEPARTMENT OF ENGINEERING
	Concrete Block, Brick or Monolithic Concrete Manholes
	APPROVED BY THE BOARD OF PUBLIC WORKS JANUARY 8, 1964 CHAIRMAN ATTEST: SECRETARY

Standard Plan No. 132

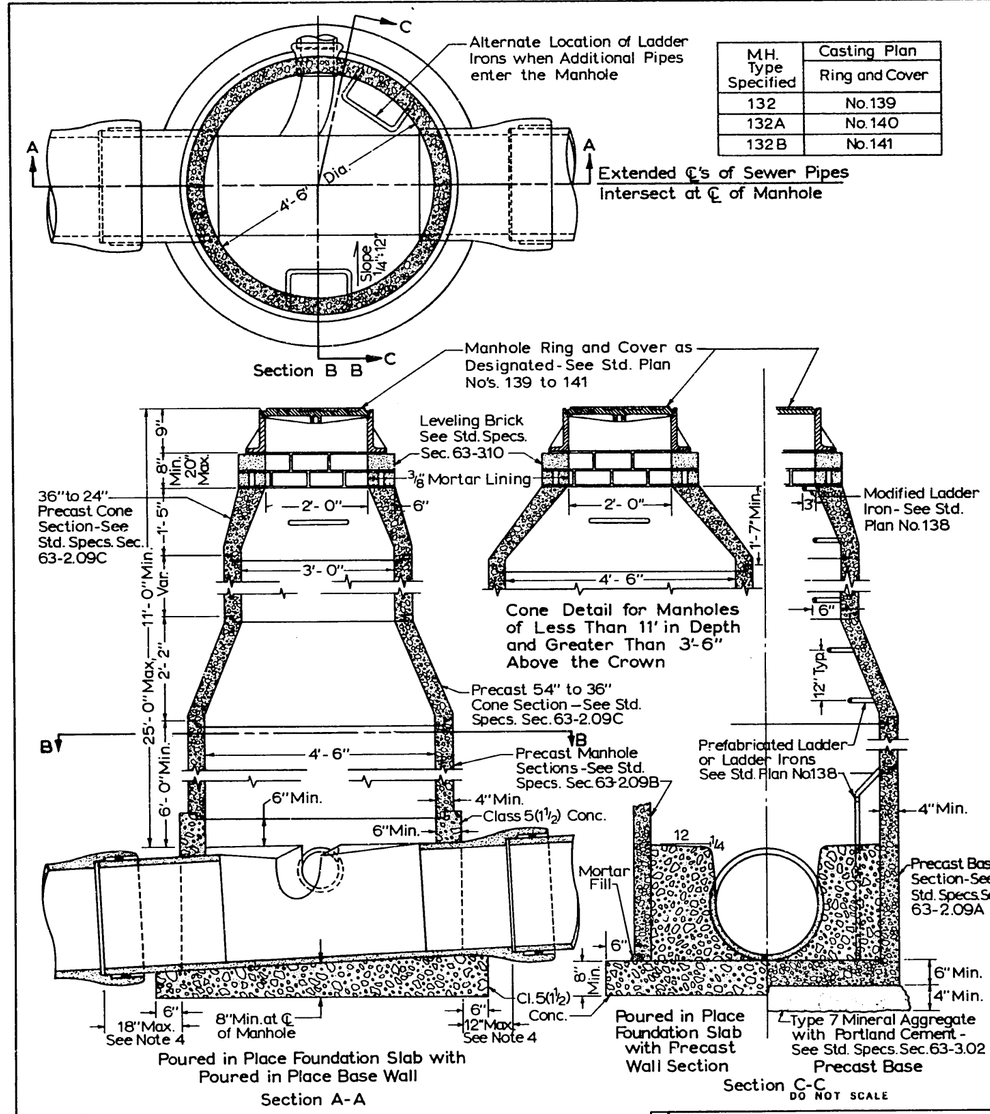

DO NOT SCALE

Notes

1. Maximum Pipe Diameter=36"
2. See Std. Specs. Sec. 63 for further requirements.
3. For Manholes constructed of alternate materials see Std. Plan No. 131.
4. The maximum dimension from Manhole to pipe joint applies only to pipe diameters 24" and less. See Std. Specs. Sec. 63-3.12

Revised 1-6-65	CITY OF SEATTLE DEPARTMENT OF ENGINEERING
	Type 132 Manhole
	APPROVED BY THE BOARD OF PUBLIC WORKS JANUARY 8, 1964 CHAIRMAN ATTEST: SECRETARY

M.H. Type Specified	Casting Plan Ring and Cover
132	No.139
132A	No.140
132B	No.141

Standard Plan No. 133

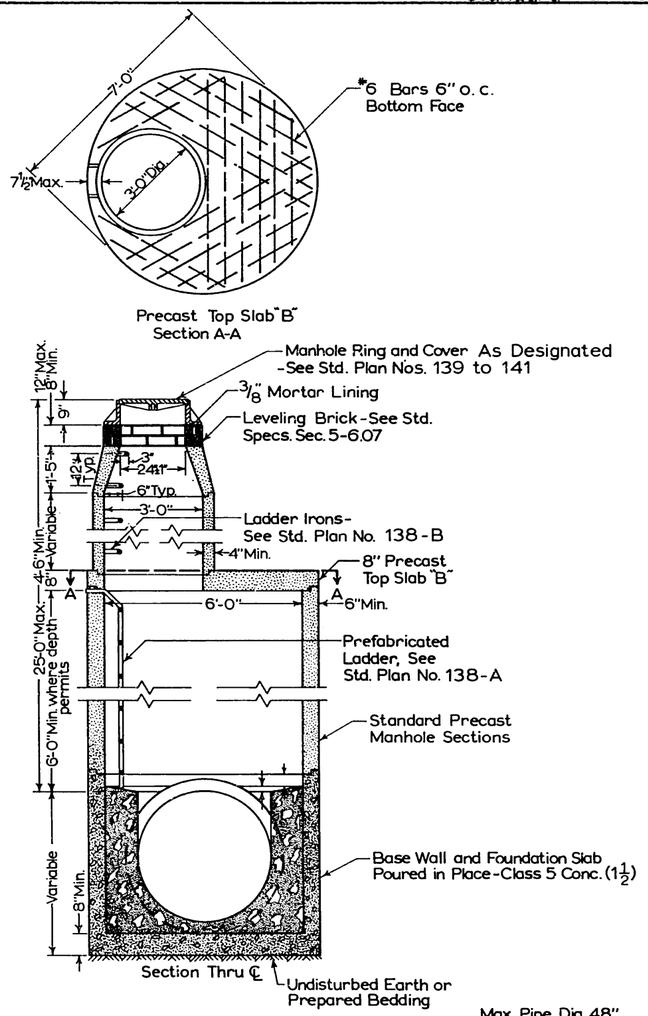

Max. Pipe Dia. 48"

Reinforcing steel shall be deformed bars conforming to ASTM A-15 and shall have a minimum cover of 2".

Unit, as shown, is precast construction - optional construction may be brick, conc. block or cast-in-place at contractor's option, unless otherwise specified on plan.

Construct manholes in accordance with Section 63 of the Std. Specifications.

Base walls all cast-in-place for 12" and larger pipe.

Allow flexible joints of unreinforced pipe to deflect. No concrete on, around or under joint.

All lift holes and joints to be filled with mortar.

DO NOT SCALE

CITY OF SEATTLE
DEPARTMENT OF ENGINEERING

Type 133 Manhole

APPROVED BY THE BOARD OF PUBLIC WORKS
JANUARY 8, 1964 CHAIRMAN
ATTEST: SECRETARY

Standard Plan No. 134

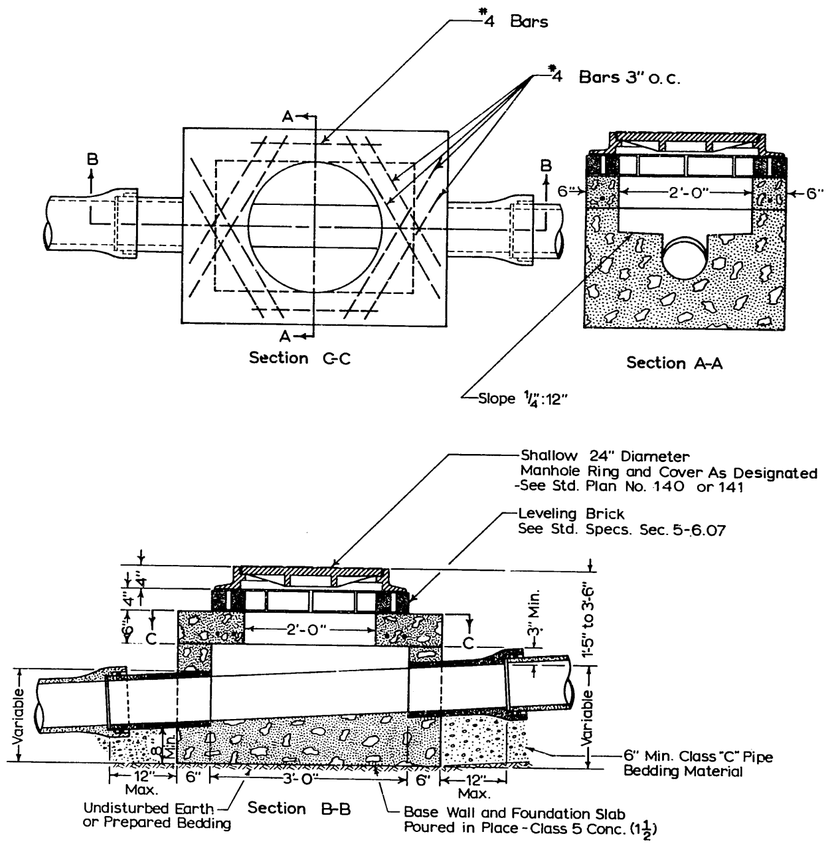

Reinforcing steel shall be deformed bars conforming to ASTM A-15 and shall have a min. cover of 2".

All lift holes and joints to be filled with mortar.

Construct manholes in accordance with Section 63 of the Standard Specifications.

Allow flexible joints of unreinforced pipe to deflect. No concrete on, around or under joint.

DO NOT SCALE

CITY OF SEATTLE
DEPARTMENT OF ENGINEERING

Type 134 Manhole

APPROVED BY THE BOARD OF PUBLIC WORKS
JANUARY 8, 1964 CHAIRMAN
ATTEST: SECRETARY

Standard Plan No. 133

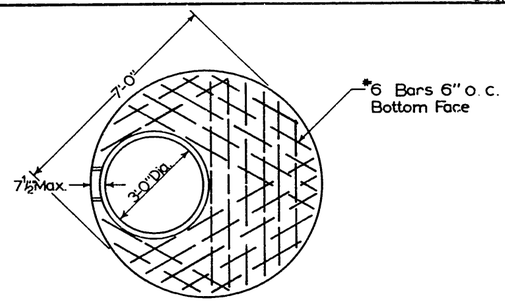

Precast Top Slab "B"
Section A-A

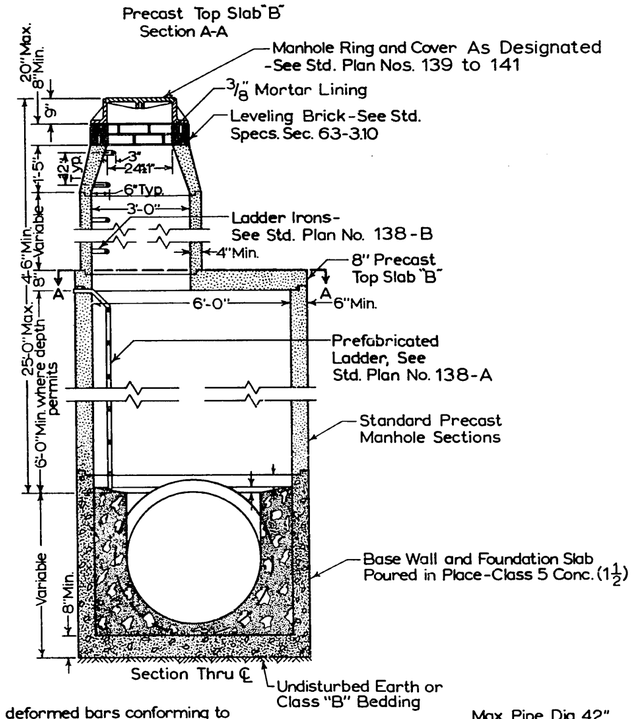

Max. Pipe Dia. 42"

Reinforcing steel shall be deformed bars conforming to ASTM A-15 and shall have a minimum cover of 2".

Unit, as shown, is a cast-in-place base section above which optional construction may be brick, conc. block or cast-in-place construction at Contractor's option, unless otherwise provided in the proposal.

Construct manholes in accordance with Section 63 of the Std. Specifications.

Base walls all cast-in-place for 12" and larger pipe.

Allow flexible joints of unreinforced pipe to deflect. No concrete on, around or under joint.

All lift holes and joints to be filled with mortar.

DO NOT SCALE

Revised 1-6-65

CITY OF SEATTLE
DEPARTMENT OF ENGINEERING

Type 133 Manhole

APPROVED BY THE BOARD OF PUBLIC WORKS
JANUARY 8, 1964 — CHAIRMAN
ATTEST: — SECRETARY

Standard Plan No. 134

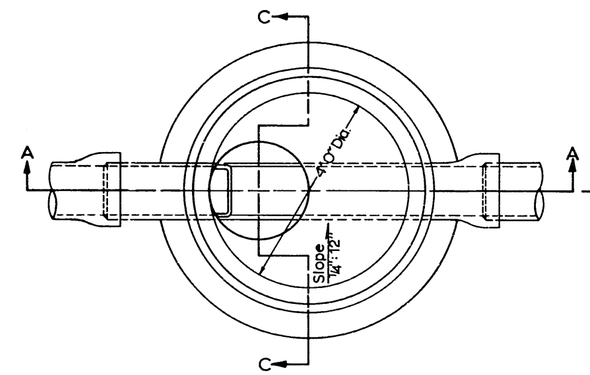

Section B-B

M.H. Type Specified	Casting Plan Ring and Cover
134	No. 139
134A	No. 140
134B	No. 141

Extended ℄'s of Sewer Pipes
Intersect at ℄ of Manhole

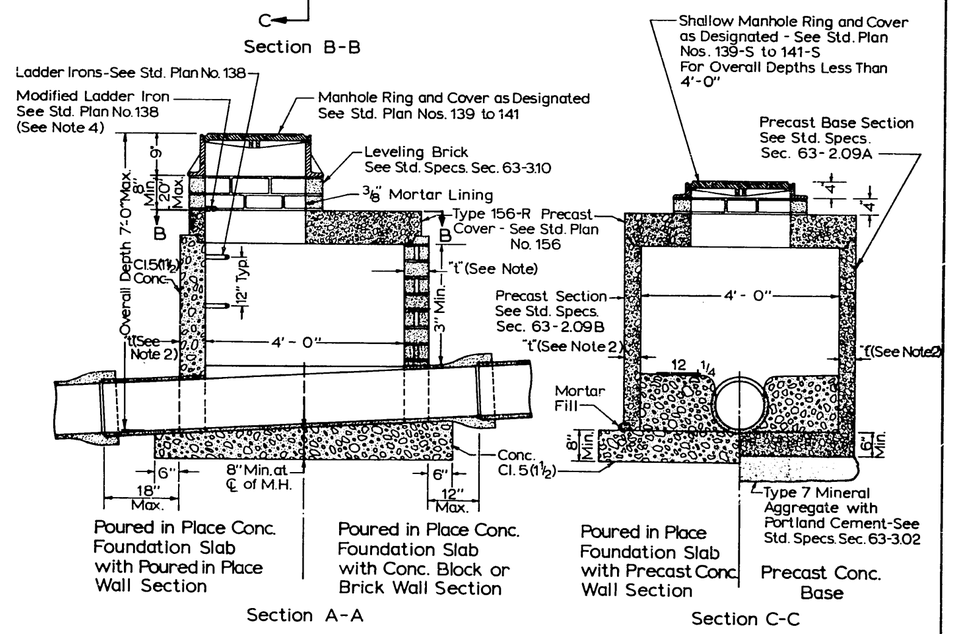

Notes

1. Maximum Pipe Diameter = 21"
2. Values of "t"
   - Precast Concrete "t" = 4" Min.
   - Cement Concrete "t" = 6"
   - Concrete Block "t" = 6"
   - Brick "t" = 8"
3. See Std. Specs. Sec. 63 for further requirements.
4. No Ladder Irons required when overall depth is less than 4'-0".

DO NOT SCALE

Revised 1-6-65

CITY OF SEATTLE
DEPARTMENT OF ENGINEERING

Type 134 Manhole

APPROVED BY THE BOARD OF PUBLIC WORKS
JANUARY 8, 1964 — CHAIRMAN
ATTEST: — SECRETARY

Standard Plan No. 135

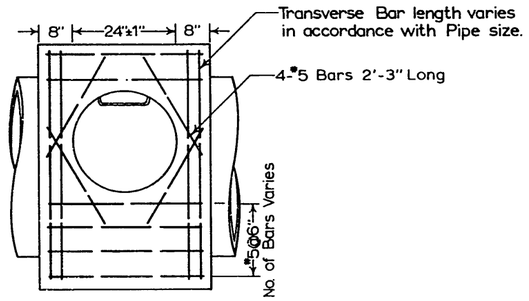

Section B-B

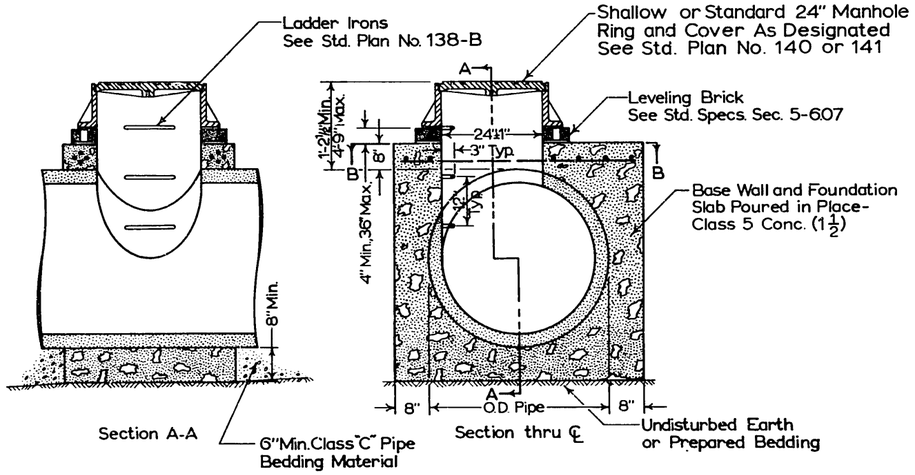

Section A-A

Section thru ℄

Pipe Dia. 24" Min. - 42" Max.

Reinforcing Steel shall be deformed bars conforming to ASTM A-15 and shall have a min. cover of 2".

Construct manholes in accordance with Section 63 of the Std. Specifications.

DO NOT SCALE

CITY OF SEATTLE
DEPARTMENT OF ENGINEERING

Type 135 Manhole

APPROVED BY THE BOARD OF PUBLIC WORKS
JANUARY 8, 1964 _____ CHAIRMAN
ATTEST: _____ SECRETARY

Standard Plan No. 136

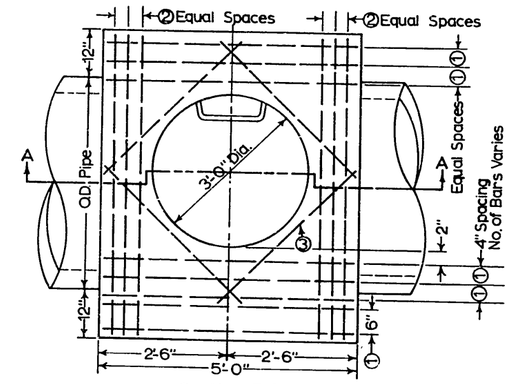

Section B-B

BAR LIST

Pipe Dia.	No.	Size	Length
① Longitudinal Bars			
42"	6	5	4'-8"
48"	7	"	"
54"	8	"	"
60"	10	"	"
66"	11	"	"
72"	12	"	"
78"	14	"	"
84"	16	"	"
② Transverse Bars			
42"	6	5	2'-8"+O.D.
48"	6	6	"
54"	6	6	"
60"	12	5	"
66"	12	5	"
72"	12	6	"
78"	12	6	"
84"	12	6	"
③ Diagonal Bars			
42"-84"	4	5	3'-8"

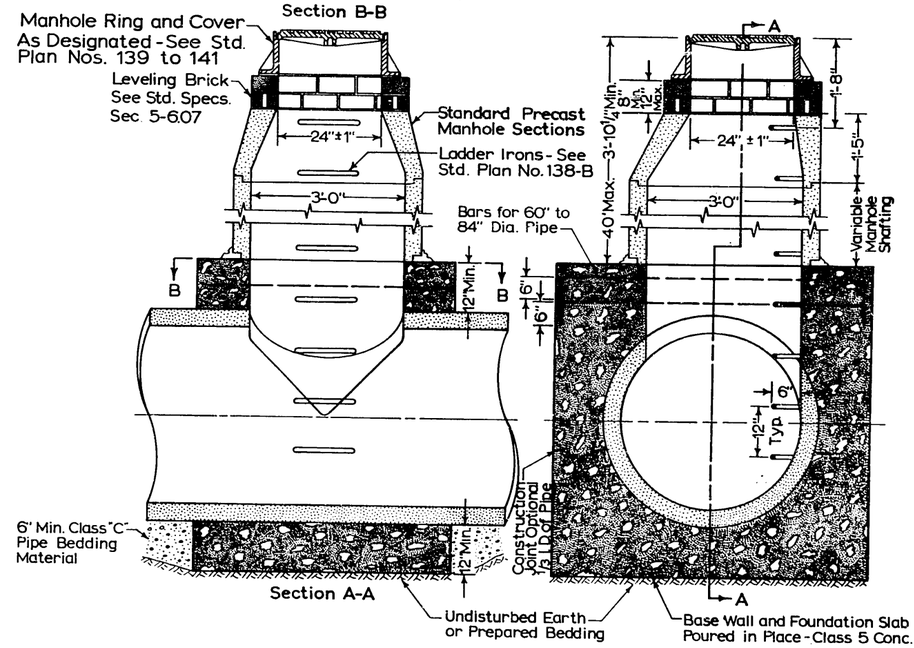

Section A-A

Unit, as shown, is precast construction - optional construction may be brick, conc. block or cast-in-place at contractor's option, unless otherwise specified on plan.

Construct manholes in accordance with Section 63 of the Std. Specifications.

Reinforcing steel shall have a min. cover of 2".

Eccentric Cones shall be used only where specified.

All lift holes and joints to be filled with mortar.

DO NOT SCALE

CITY OF SEATTLE
DEPARTMENT OF ENGINEERING

Type 136 Manhole

APPROVED BY THE BOARD OF PUBLIC WORKS
JANUARY 8, 1964 _____ CHAIRMAN
ATTEST: _____ SECRETARY

Standard Plan No. 135

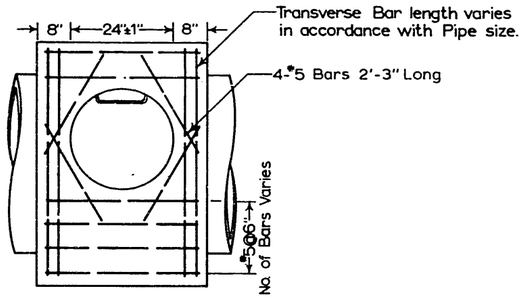

Section B-B

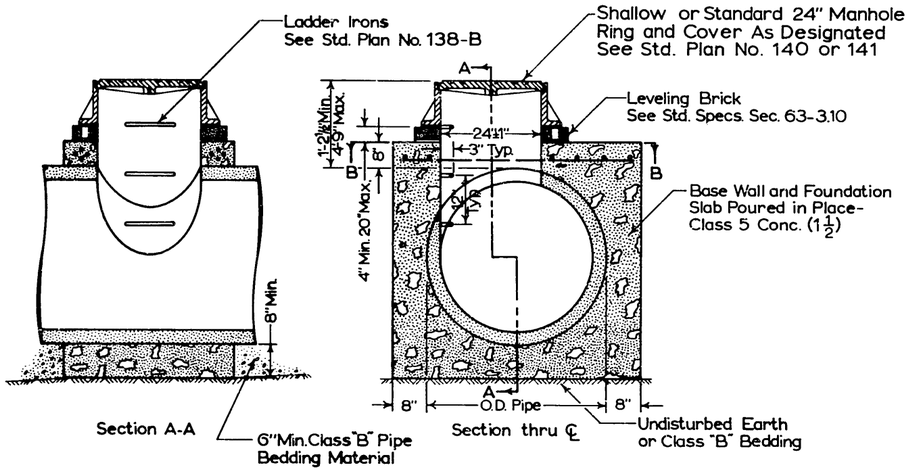

Section A-A

Section thru ℄

Pipe Dia. 24" Min. - 42" Max.

Reinforcing Steel shall be deformed bars conforming to ASTM A-15 and shall have a min. cover of 2".

Construct manholes in accordance with Section 63 of the Std. Specifications.

DO NOT SCALE

Revised 1-6-65	CITY OF SEATTLE DEPARTMENT OF ENGINEERING
	Type 135 Manhole
	APPROVED BY THE BOARD OF PUBLIC WORKS JANUARY 8, 1964 CHAIRMAN ATTEST: SECRETARY

Standard Plan No. 136

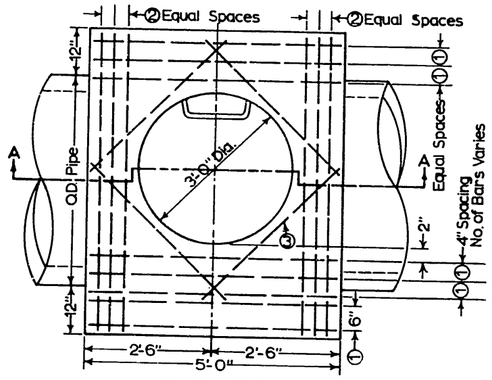

Section B-B

BAR LIST

Pipe Dia.	No.	Size	Length
① Longitudinal Bars			
42"	6	5	4'-8"
48"	7	"	"
54"	8	"	"
60"	10	"	"
66"	11	"	"
72"	12	"	"
78"	14	"	"
84"	16	"	"
② Transverse Bars			
42"	6	5	2'-8"+O.D.
48"	6	6	"
54"	6	6	"
60"	12	5	"
66"	12	5	"
72"	12	6	"
78"	12	6	"
84"	12	6	"
③ Diagonal Bars			
42"-84"	4	5	3'-8"

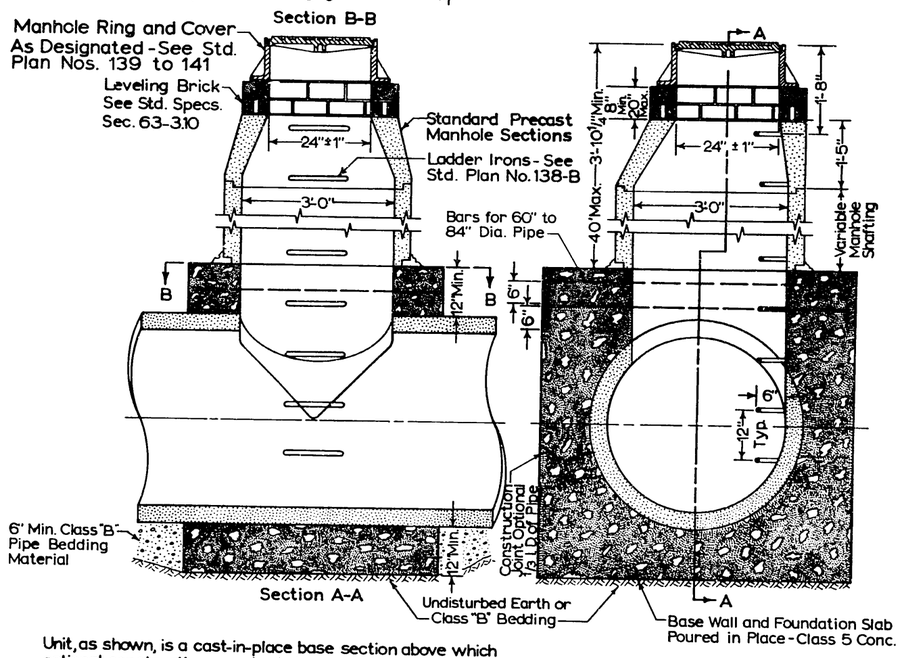

Section A-A

Unit, as shown, is a cast-in-place base section above which optional construction may be brick, conc. block or cast-in-place construction at Contractor's option, unless otherwise provided in the proposal.

Construct manholes in accordance with Section 63 of the Std. Specifications.

Reinforcing steel shall have a min. cover of 2".

Eccentric Cones shall be used only where specified.

All lift holes and joints to be filled with mortar.

DO NOT SCALE

Revised 1-6-65	CITY OF SEATTLE DEPARTMENT OF ENGINEERING
	Type 136 Manhole
	APPROVED BY THE BOARD OF PUBLIC WORKS JANUARY 8, 1964 CHAIRMAN ATTEST: SECRETARY

Standard Plan No. 137

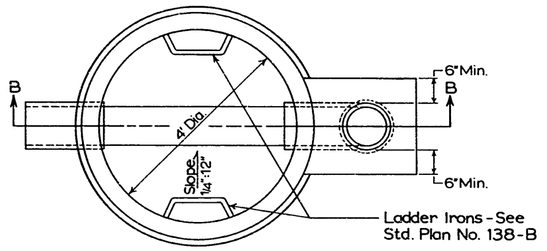

Section A-A

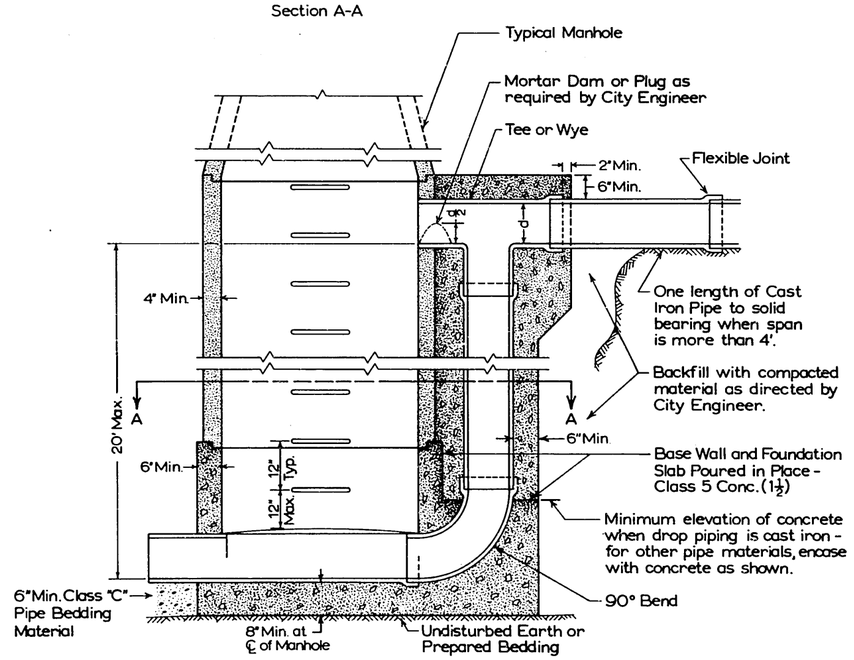

Section B-B

Concrete required only to bell of elbow when drop connection is cast iron pipe.

To be used where drop is not more than 20'.

DO NOT SCALE

CITY OF SEATTLE
DEPARTMENT OF ENGINEERING

Type 137 Manhole Drop Connection

APPROVED BY THE BOARD OF PUBLIC WORKS
JANUARY 8, 1964 CHAIRMAN
ATTEST: SECRETARY

Standard Plan No.138

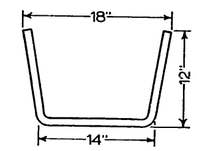

B - Ladder Iron

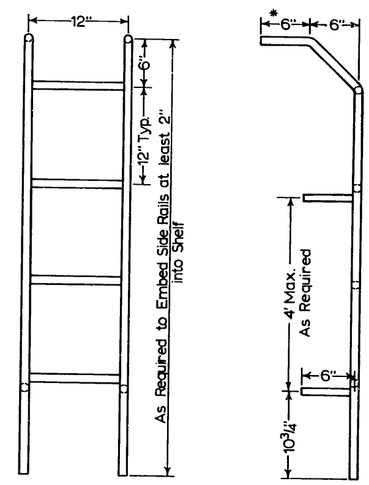

A - Prefabricated Ladder

* 9" when used with Precast Reducing Slab.

Rungs and Irons to be deformed or non-skid

Material shall be 1" Dia. Aluminum or Galvanized Steel.

All Steel to be Galvanized after fabrication according to Std. Specs. Sec. 2-7.01

DO NOT SCALE

CITY OF SEATTLE
DEPARTMENT OF ENGINEERING

Ladder and Ladder Irons

APPROVED BY THE BOARD OF PUBLIC WORKS
JANUARY 8, 1964 CHAIRMAN
ATTEST: SECRETARY

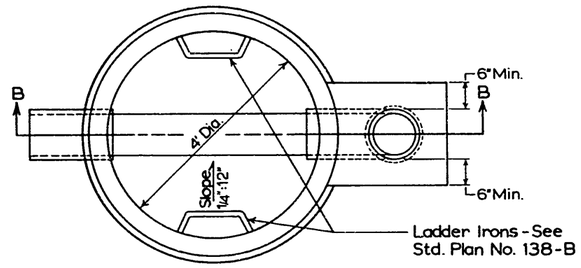

Section A-A

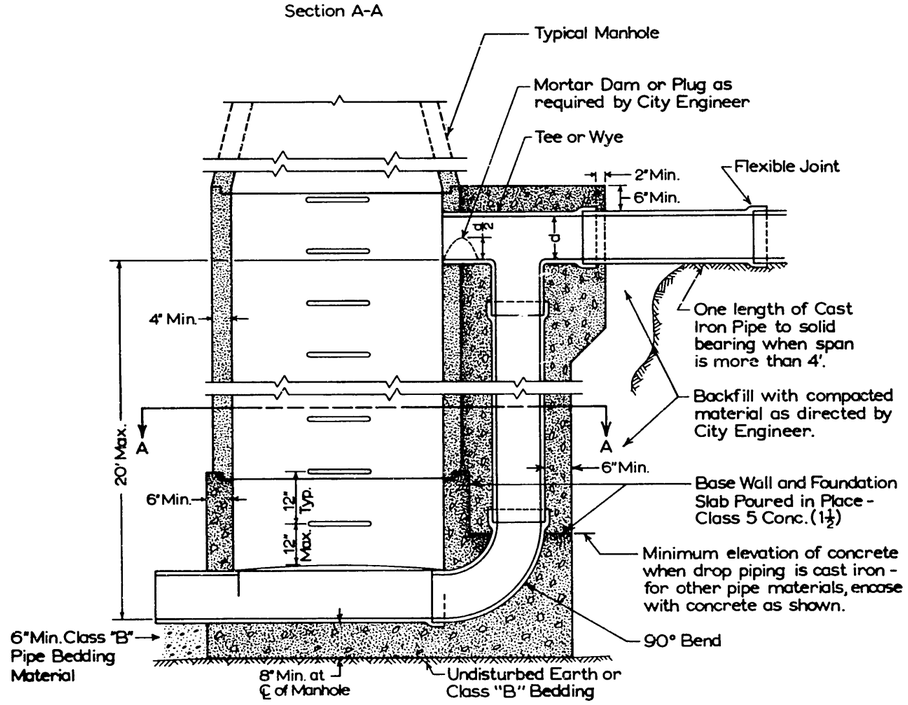

Section B-B

Concrete required only to bell of elbow when drop connection is cast iron pipe.

To be used where drop is not more than 20'.

DO NOT SCALE

Revised 1-6-65	CITY OF SEATTLE DEPARTMENT OF ENGINEERING
	Type 137 Manhole Drop Connection
	APPROVED BY THE BOARD OF PUBLIC WORKS JANUARY 6, 1964 H. W. Morse CHAIRMAN ATTEST: E. B. Hung SECRETARY

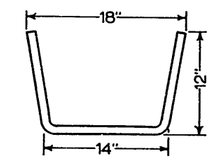

B - Ladder Iron

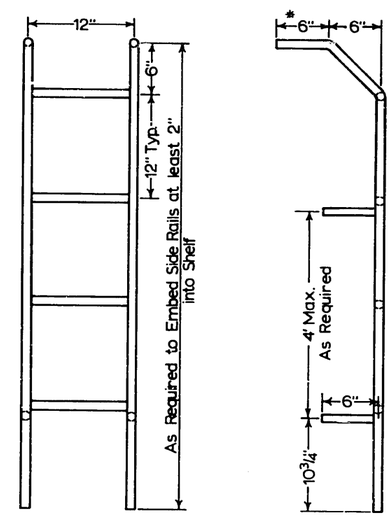

A - Prefabricated Ladder

* 9" when used with Precast Reducing Slab.

Rungs and Irons to be deformed or non-skid.

Materials for Aluminum Ladder Irons and Prefabricated Ladders, or Galvanized Deformed Bar Ladder Irons and Prefabricated Ladders, shall conform to the specifications therefor in Section 63-2.02A and Section 63-2.02B, respectively.

DO NOT SCALE

Revised 1-6-65	CITY OF SEATTLE DEPARTMENT OF ENGINEERING
	Ladder and Ladder Irons
	APPROVED BY THE BOARD OF PUBLIC WORKS JANUARY 6, 1964 H. W. Morse CHAIRMAN ATTEST: E. B. Hung SECRETARY

Standard Plan No. 139

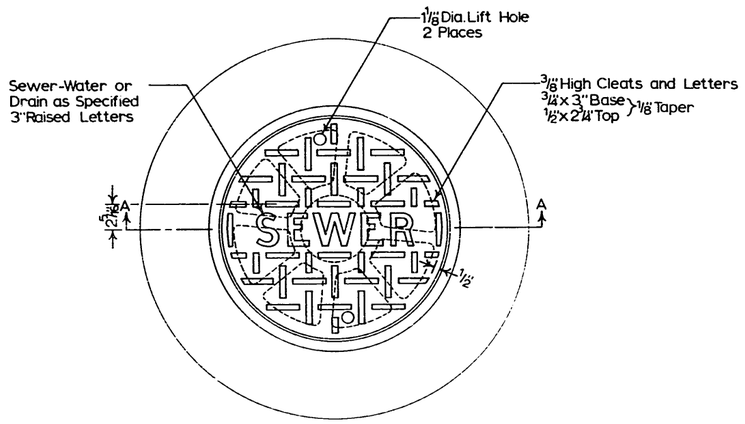

Ring and Cover shall be tested for accuracy of fit and shall be marked in sets for delivery. See Std. Specs. Sec. 113.

All Castings to have a bituminous coating according to Std. Specs. Sec. 63.208.

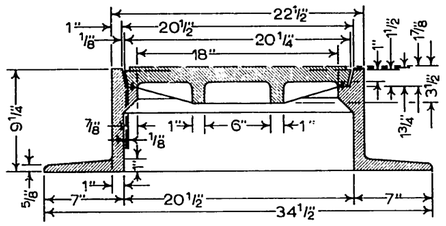

Section A-A

For Replacement Only-See Standard Plan No. 141

Designate Nodular Iron as Type 139-N
(Nodular Iron To Be Used For Cover Only)

Designate Locking Cover as Type 139-L
(For Locking Device See Standard Plan No. 144)

Designate Shallow Ring as Type 139-S
(For Shallow Ring 9 1/4" Dimension to be 4")

Combinations of Type Designations May Be Used
(Type 139-LNS – Type 139 Locking Cover, Nodular Iron, Shallow Ring)

DO NOT SCALE

CITY OF SEATTLE
DEPARTMENT OF ENGINEERING

Type 139-18 Inch Diameter Manhole Ring and Cover

APPROVED BY THE BOARD OF PUBLIC WORKS
JANUARY 8, 1964 — CHAIRMAN
ATTEST: — SECRETARY

Standard Plan No. 140

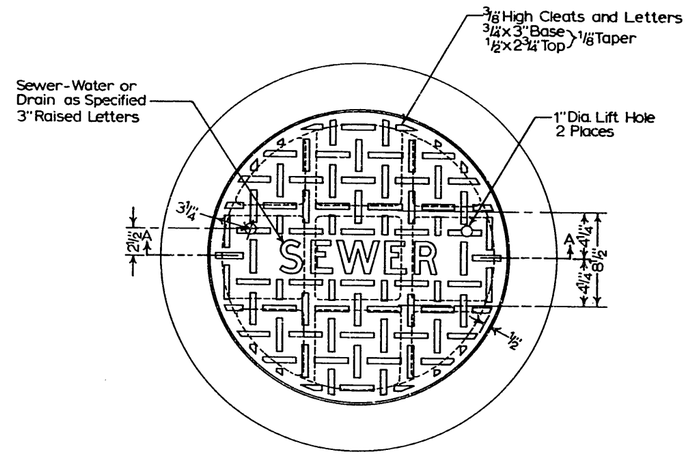

Ring and Cover shall be tested for accuracy of fit and shall be marked in sets for delivery. See Std. Specs. Sec. 113.

All Castings to have a bituminous coating according to Std. Specs. Sec. 63.208.

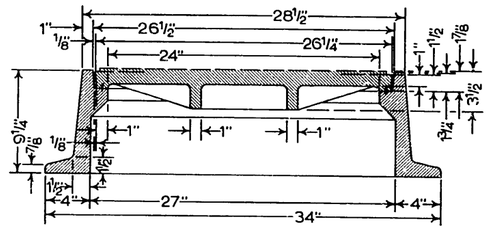

Section A-A

For Replacement Only-See Standard Plan No. 141

Designate Nodular Iron as Type 140-N
(Nodular Iron To Be Used For Cover Only)

Designate Locking Cover as Type 140-L
(For Locking Device See Standard Plan No. 144)

Designate Shallow Ring as Type 140-S
(For Shallow Ring 9 1/4" Dimension to be 4")

Combinations of Type Designations May Be Used
(Type 140-LNS – Type 140 Locking Cover, Nodular Iron, Shallow Ring)

DO NOT SCALE

CITY OF SEATTLE
DEPARTMENT OF ENGINEERING

Type 140-24 Inch Diameter Manhole Ring and Cover

APPROVED BY THE BOARD OF PUBLIC WORKS
JANUARY 8, 1964 — CHAIRMAN
ATTEST: — SECRETARY

Standard Plan No. 139

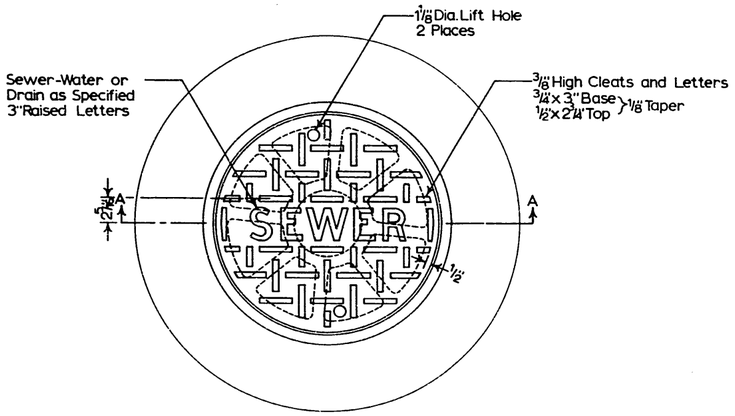

Ring and Cover shall be tested for accuracy of fit and shall be marked in sets for delivery. See Std. Specs. Sec. 113.

All Castings to have a bituminous coating according to Std. Specs. Sec. 63-2.08

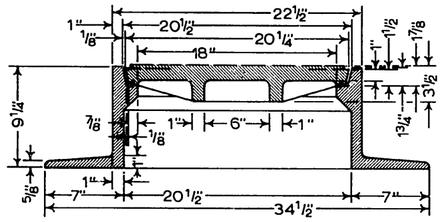

Section A-A

Designate Nodular Iron as Type 139-N
(Nodular Iron To Be Used For Cover Only)

Designate Locking Cover as Type 139-L
(For Locking Device See Standard Plan No. 144)

Designate Shallow Ring as Type 139-S
(For Shallow Ring 9 1/4" Dimension to be 4")

Combinations of Type Designations May Be Used
(Type 139-LNS – Type 139 Locking Cover, Nodular Iron, Shallow Ring)

DO NOT SCALE

Revised 1-6-65	CITY OF SEATTLE DEPARTMENT OF ENGINEERING
	Type 139-18 Inch Diameter Manhole Ring and Cover
	APPROVED BY THE BOARD OF PUBLIC WORKS JANUARY 8, 1964 CHAIRMAN ATTEST: SECRETARY

Standard Plan No. 140

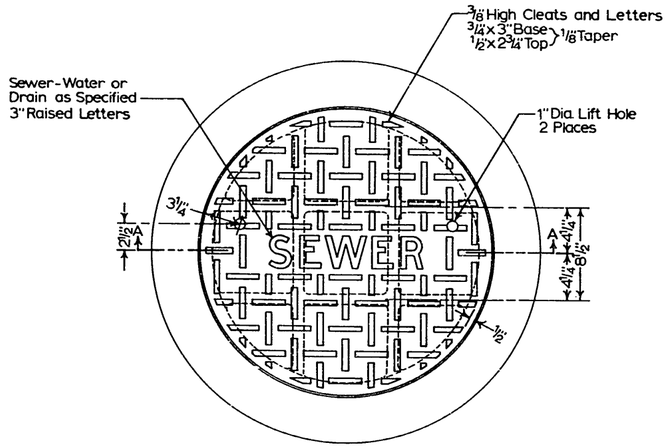

Ring and Cover shall be tested for accuracy of fit and shall be marked in sets for delivery. See Std. Specs. Sec. 113.

All Castings to have a bituminous coating according to Std. Specs. Sec. 63-2.08

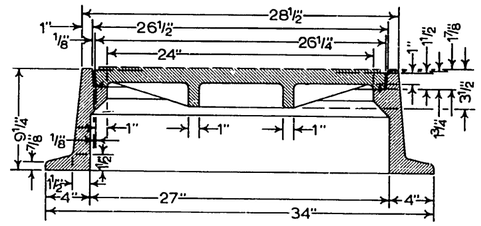

Section A-A

Designate Nodular Iron as Type 140-N
(Nodular Iron To Be Used For Cover Only)

Designate Locking Cover as Type 140-L
(For Locking Device See Standard Plan No. 144)

Designate Shallow Ring as Type 140-S
(For Shallow Ring 9 1/4" Dimension to be 4")

Combinations of Type Designations May Be Used
(Type 140-LNS – Type 140 Locking Cover, Nodular Iron, Shallow Ring)

DO NOT SCALE

Revised 1-6-65	CITY OF SEATTLE DEPARTMENT OF ENGINEERING
	Type 140-24 Inch Diameter Manhole Ring and Cover
	APPROVED BY THE BOARD OF PUBLIC WORKS JANUARY 8, 1964 CHAIRMAN ATTEST: SECRETARY

Standard Plan No. 141

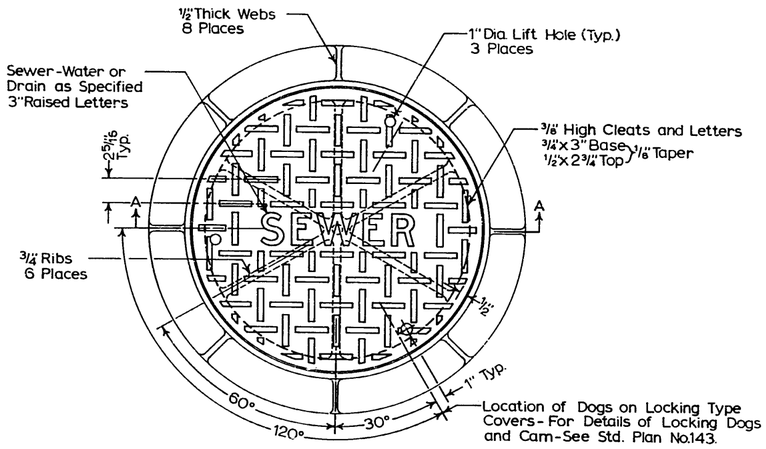

Ring and Cover shall be tested for accuracy of fit and shall be marked in sets for delivery. See Std. Specs. Sec. 113.

All Castings to have a bituminous coating according to Std. Specs. Sec. 63.208.

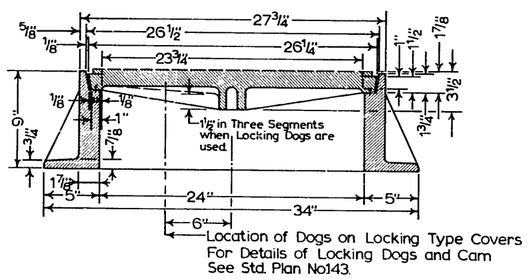

Section A-A

Designate Nodular Iron as Type 141-N
(Nodular Iron To Be Used For Cover Only)

Designate Locking Cover as Type 141-L
(For Locking Device See Standard Plan No. 143)

Designate Shallow Ring as Type 141-S
(For Shallow Ring 9" Dimension to be 4")

Combinations of Type Designations May Be Used
(Type 141-LNS - Type 141 Locking Cover, Nodular Iron, Shallow Ring)

DO NOT SCALE

CITY OF SEATTLE
DEPARTMENT OF ENGINEERING

Type 141-24 Inch Diameter
Manhole Ring and Cover

APPROVED BY THE BOARD OF PUBLIC WORKS
JANUARY 8, 1964 CHAIRMAN
ATTEST: SECRETARY

There is no
Standard Plan
#142
in the book
at the time of filming.

Standard Plan No. 141

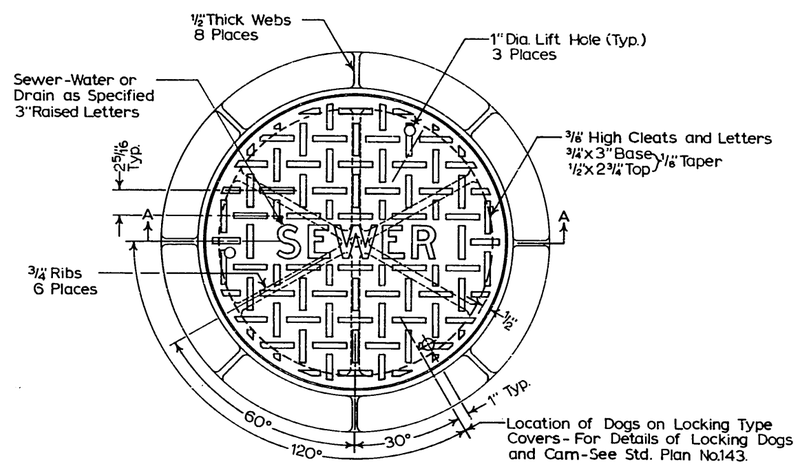

Ring and Cover shall be tested for accuracy of fit and shall be marked in sets for delivery. See Std. Specs. Sec. 113.

All Castings to have a bituminous coating according to Std. Specs. Sec. 63.208.

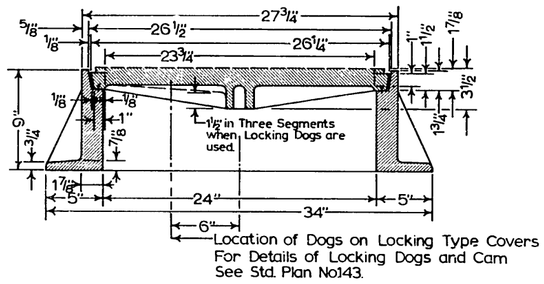

Section A-A

Designate Nodular Iron as Type 141-N
(Nodular Iron To Be Used For Cover Only)

Designate Locking Cover as Type 141-L
(For Locking Device See Standard Plan No. 143)

Designate Shallow Ring as Type 141-S
(For Shallow Ring 9" Dimension to be 4")

Combinations of Type Designations May Be Used
(Type 141-LNS - Type 141 Locking Cover, Nodular Iron, Shallow Ring)

DO NOT SCALE

CITY OF SEATTLE
DEPARTMENT OF ENGINEERING

Type 141-24 Inch Diameter
Manhole Ring and Cover

APPROVED BY THE BOARD OF PUBLIC WORKS
JANUARY 8, 1964 CHAIRMAN
ATTEST: SECRETARY

Standard Plan No.143

For Locking Device see U. S. Government
Patent Office Design Patent No. 2697389.
As Manufactured by
Atlas Foundry and Machine Co., Tacoma
and
Olympic Foundry Co., Seattle

For use on Type 141
Manhole Cover

CITY OF SEATTLE
DEPARTMENT OF ENGINEERING

Locking Device
For Manhole Covers

APPROVED BY THE BOARD OF PUBLIC WORKS
JANUARY 8, 1964 CHAIRMAN
ATTEST: SECRETARY

Standard Plan No.144

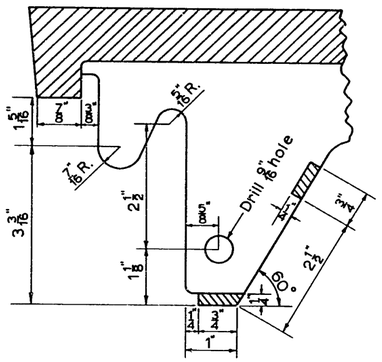

Locking Dog Bracket

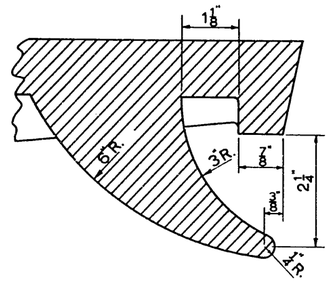

Sectional View - Fixed Dog

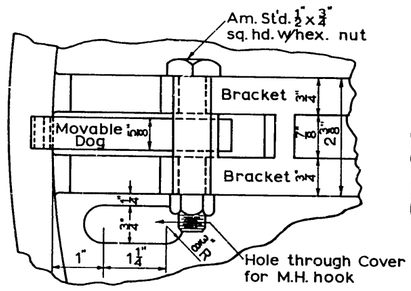

Bottom View-Locking Assembly

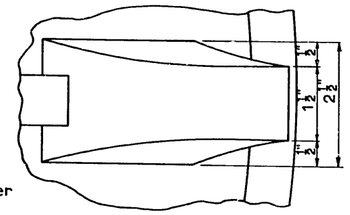

Bottom View - Fixed Dog

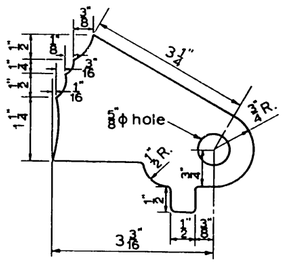

Locking Dog
(Malleable Iron)

For use on Type 139 and 140
Manhole Covers

DO NOT SCALE

CITY OF SEATTLE
DEPARTMENT OF ENGINEERING

Locking Device
For Manhole Covers

APPROVED BY THE BOARD OF PUBLIC WORKS
JANUARY 8, 1964 CHAIRMAN
ATTEST: SECRETARY

Standard Plan No. 145

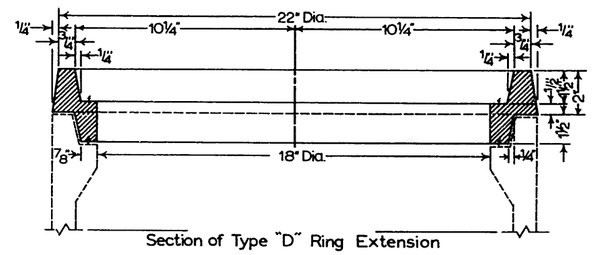

Section of Type "D" Ring Extension

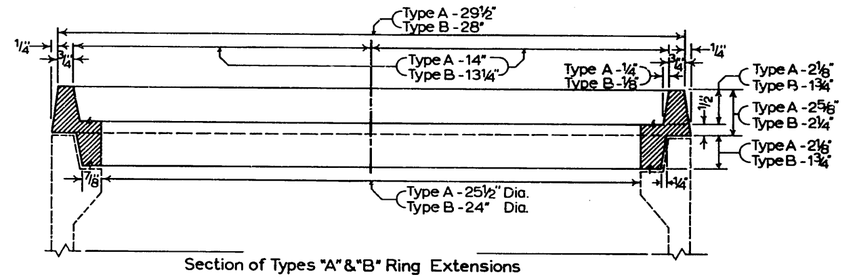

Section of Types "A" & "B" Ring Extensions

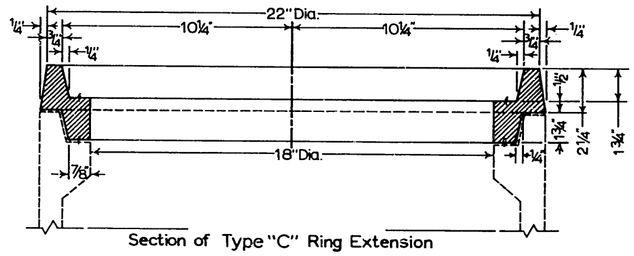

Section of Type "C" Ring Extension

Manhole ring extension shall be tested for accuracy of fit. See Std. Specs. Sec. 113.

All Castings to have a bituminous coating according to Std. Specs. Sec. 63.208.

Ring Ext. Type	To Be Used With	
	Std. Plan No.	Name
145A	187	25½" Valve Chamber Ring & Cover
145B	140	24" Diameter Manhole Ring & Cover
	141	24" Diameter Manhole Ring & Cover
145C	139	18" Diameter Manhole Ring & Cover
	186	18" Valve Chamber Ring & Cover
145D	157	18" Circular Inlet Ring & Grate

DO NOT SCALE

CITY OF SEATTLE
DEPARTMENT OF ENGINEERING

Manhole Ring Extensions

APPROVED BY THE BOARD OF PUBLIC WORKS
JANUARY 8, 1964 CHAIRMAN
ATTEST: SECRETARY

There are no Standard Plans #146, #147 & #148 in the book at the time of filming.

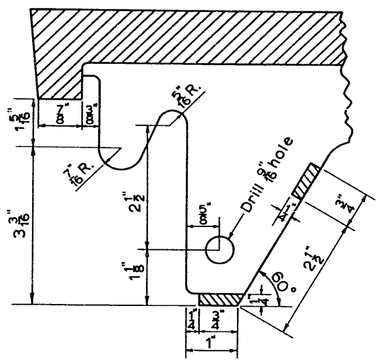

Locking Dog Bracket

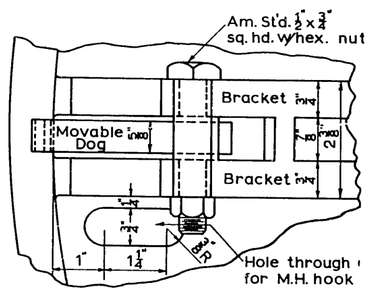

Bottom View-Locking Assembly

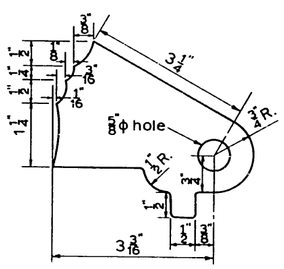

Locking Dog
(Malleable Iron)

Standard Plan No. 145

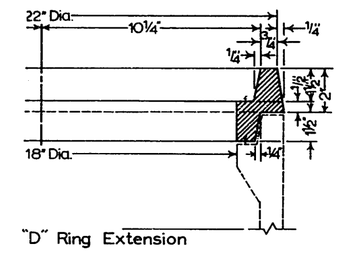

"D" Ring Extension

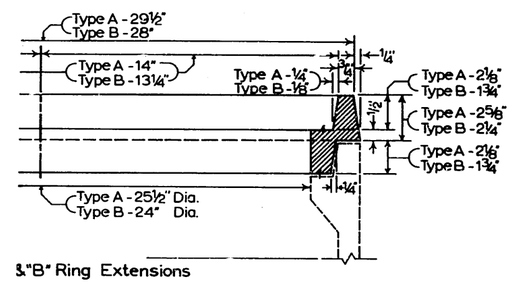

& "B" Ring Extensions

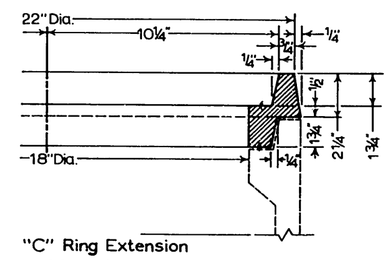

"C" Ring Extension

Manhole ring extension shall be tested for accuracy of fit. See Std. Specs. Sec. 113.

All Castings to have a bituminous coating according to Std. Specs. Sec. 63.208.

DO NOT SCALE

CITY OF SEATTLE
DEPARTMENT OF ENGINEERING

Manhole Ring Extensions

APPROVED BY THE BOARD OF PUBLIC WORKS
JANUARY 8, 1964 CHAIRMAN
ATTEST: SECRETARY

Standard Plan No.149

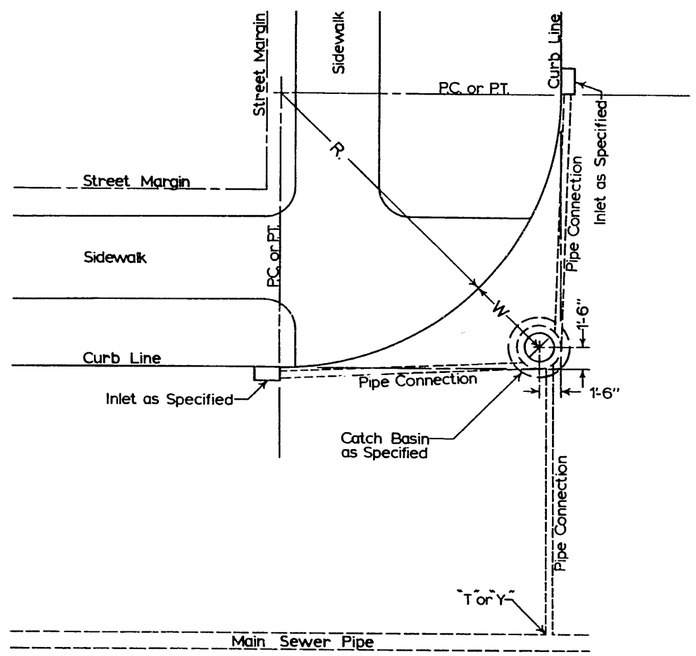

Distance "W" for Catch Basin location varies according to "R" as located by the City Engineer for making satisfactory pipe connections, and to clear other underground utilities.

DO NOT SCALE

CITY OF SEATTLE
DEPARTMENT OF ENGINEERING

Location of Catch Basin with Inlets

APPROVED BY THE BOARD OF PUBLIC WORKS
JANUARY 8, 1964 — CHAIRMAN
ATTEST: — SECRETARY

Standard Plan No.150

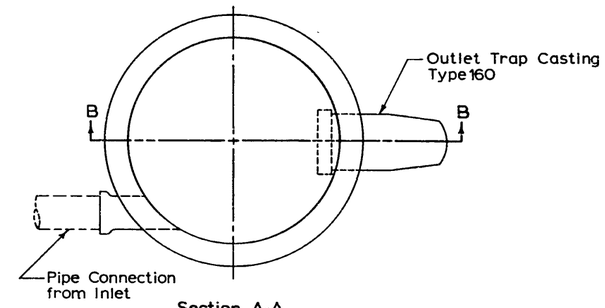

Section A-A

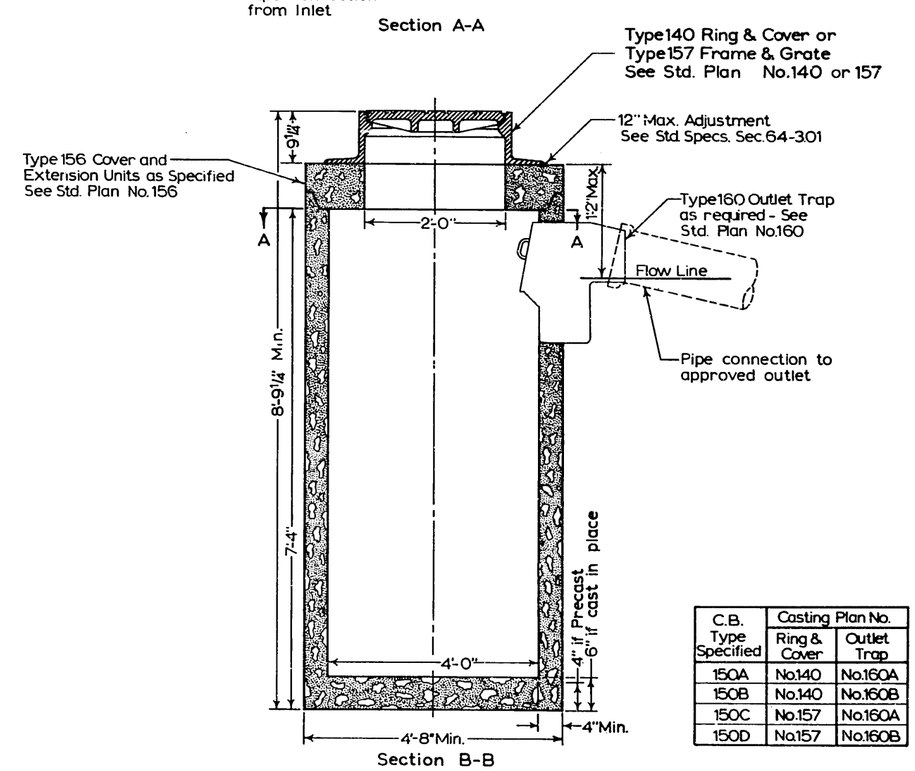

Section B-B

C.B. Type Specified	Casting Plan No.	
	Ring & Cover	Outlet Trap
150A	No.140	No.160A
150B	No.140	No.160B
150C	No.157	No.160A
150D	No.157	No.160B

All lift holes and joints to be filled with mortar.

DO NOT SCALE

CITY OF SEATTLE
DEPARTMENT OF ENGINEERING

Type 150 Catch Basin

APPROVED BY THE BOARD OF PUBLIC WORKS
JANUARY 8, 1964 — CHAIRMAN
ATTEST: — SECRETARY

Standard Plan No. 151

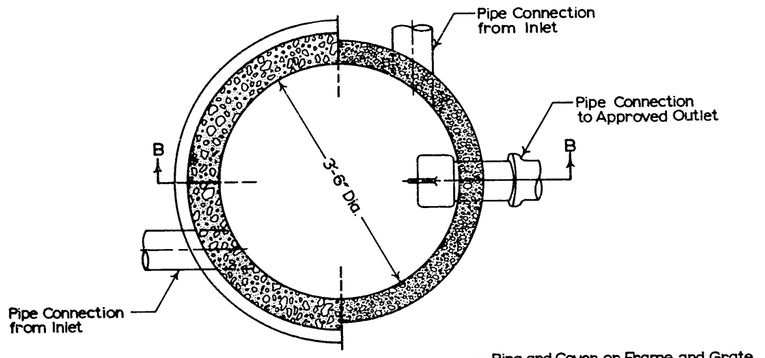

Section A-A

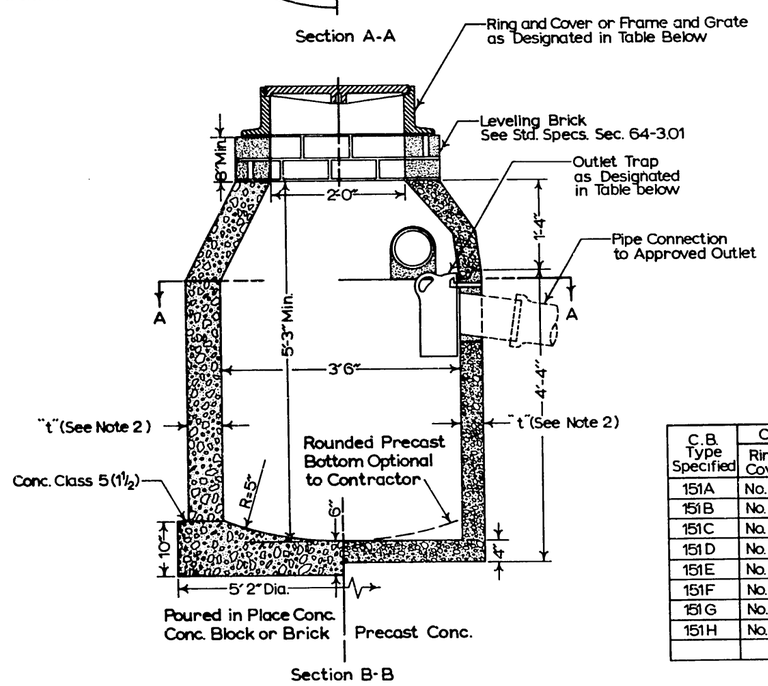

Section B-B

C.B. Type Specified	Casting Plan	
	Ring & Cover	Outlet Trap
151A	No. 141	No.160A
151B	No. 141	No.160B
151C	No. 141	No.162A
151D	No. 141	No.162B
151E	No. 157	No.160A
151F	No. 157	No.160B
151G	No. 157	No.162A
151H	No. 157	No.162B

DO NOT SCALE

Notes

1. Invert of Inlet Pipes must be above invert of Outlet Pipe.
2. Values of "t"
   - Cement Concrete t = 6"
   - Concrete Blocks t = 6"
   - Brick t = 8"
   - Precast Concrete t = 4" Min.
3. See Std. Specs. Sec. 64 for further requirements.

CITY OF SEATTLE
DEPARTMENT OF ENGINEERING

Type 151 Catch Basin

APPROVED BY THE BOARD OF PUBLIC WORKS
Jan 20 1925 F. W. Morse CHAIRMAN
ATTEST: E. Erkeung SECRETARY

Standard Plan No. 152

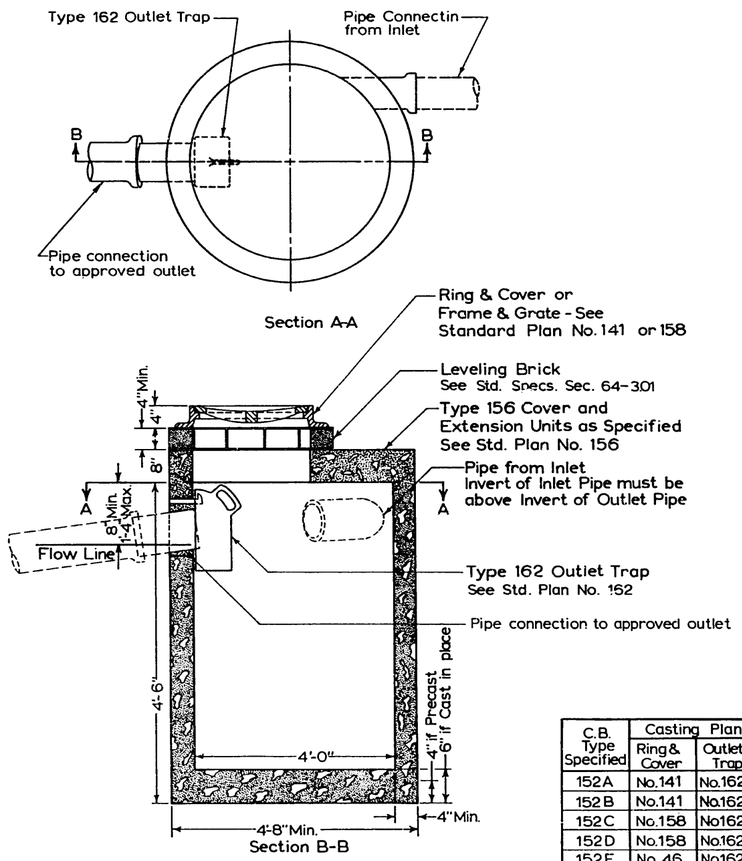

C.B. Type Specified	Casting Plan	
	Ring & Cover	Outlet Trap
152A	No.141	No.162A
152B	No.141	No.162B
152C	No.158	No162A
152D	No.158	No.162B
152E	No. 46	No162A
152F	No. 46	No162B

DO NOT SCALE

Inlet or Manhole Ring and Cover to be placed over trap.

Opening in inlet to be placed parallel to direction of flow.

All lift holes, joints, and opening for Outlet Pipe to be filled with mortar or brick chip and mortar.

CITY OF SEATTLE
DEPARTMENT OF ENGINEERING

Type 152 Catch Basin

APPROVED BY THE BOARD OF PUBLIC WORKS
JANUARY 8, 1964 — CHAIRMAN
ATTEST: — SECRETARY

Standard Plan No. 153

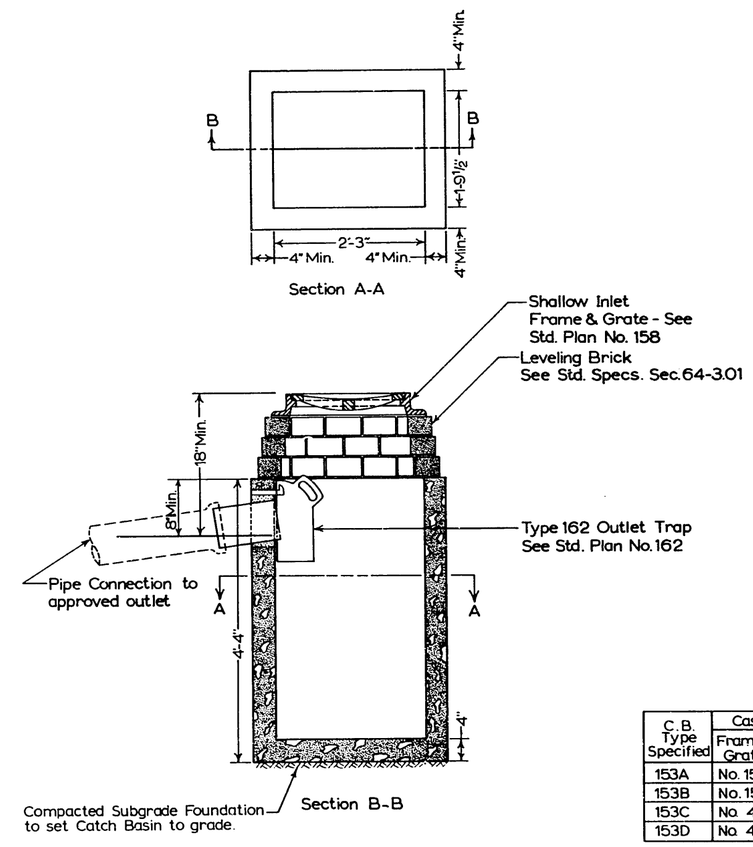

C.B. Type Specified	Casting Plan	
	Frame & Grate	Outlet Trap
153A	No. 158	No.162A
153B	No. 158	No.162B
153C	No. 46	No.162A
153D	No. 46	No.162B

DO NOT SCALE

All lift holes and joints to be filled with mortar.

For installation see Std. Plan No. 153.1

Compacted backfill shall be placed around Catch Basin before pipe connection is made.

CITY OF SEATTLE
DEPARTMENT OF ENGINEERING

Type 153 Catch Basin

APPROVED BY THE BOARD OF PUBLIC WORKS
JANUARY 8, 1964 — CHAIRMAN
ATTEST: — SECRETARY

Standard Plan No. 152

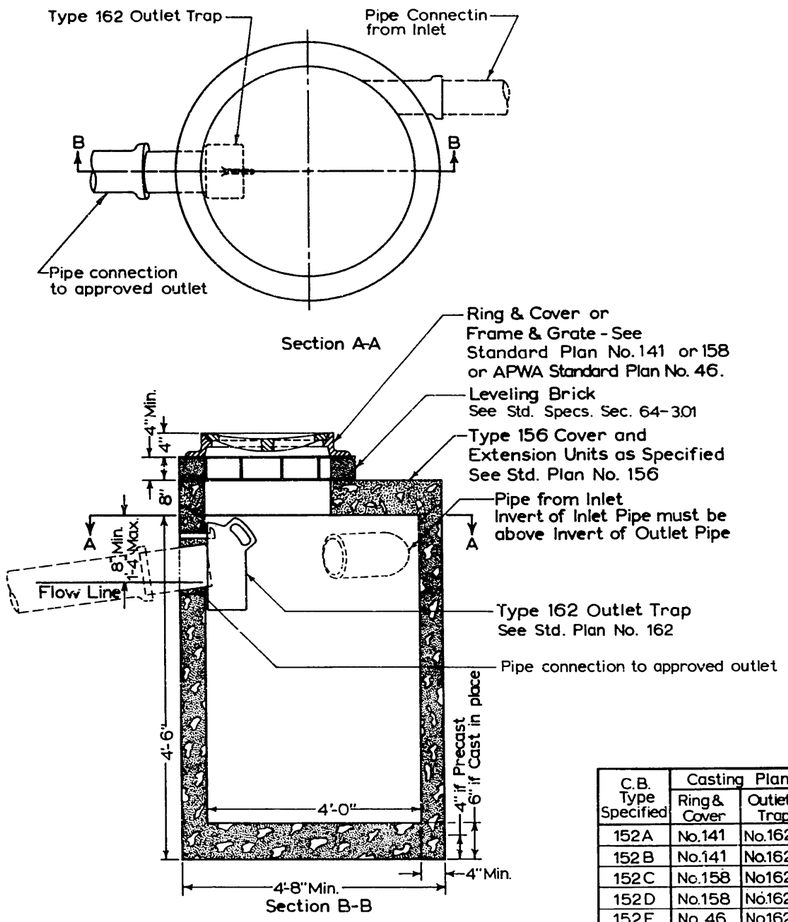

C.B. Type Specified	Casting Plan	
	Ring & Cover	Outlet Trap
152A	No.141	No.162A
152B	No.141	No.162B
152C	No.158	No162A
152D	No.158	No.162B
152E	No. 46	No162A
152F	No. 46	No162B

Inlet or Manhole Ring and Cover to be placed over trap.

Opening in inlet to be placed parallel to direction of flow.

All lift holes, joints, and opening for Outlet Pipe to be filled with mortar or brick chip and mortar.

DO NOT SCALE

Revised 1-6-65

CITY OF SEATTLE
DEPARTMENT OF ENGINEERING

Type 152 Catch Basin

APPROVED BY THE BOARD OF PUBLIC WORKS
JANUARY 8, 1964 CHAIRMAN
ATTEST: SECRETARY

Standard Plan No. 153

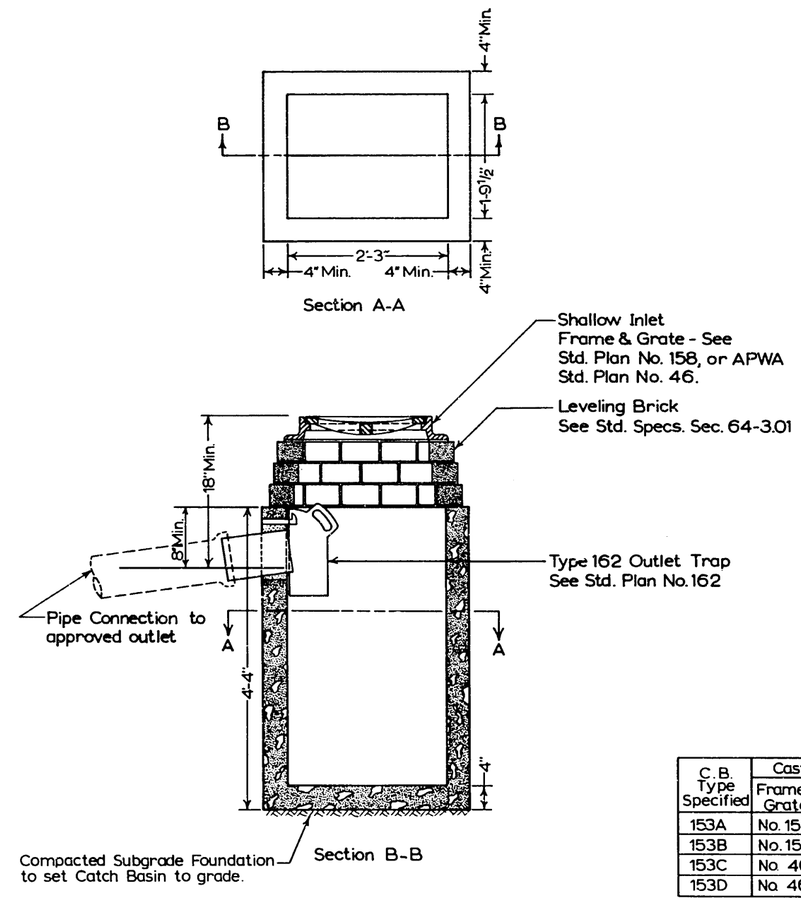

C.B. Type Specified	Casting Plan	
	Frame & Grate	Outlet Trap
153A	No. 158	No.162A
153B	No. 158	No.162B
153C	No. 46	No.162A
153D	No. 46	No.162B

All lift holes and joints to be filled with mortar.

For installation see Std. Plan No. 153.1

Compacted backfill shall be placed around Catch Basin before pipe connection is made.

DO NOT SCALE

Revised 1-6-65

CITY OF SEATTLE
DEPARTMENT OF ENGINEERING

Type 153 Catch Basin

APPROVED BY THE BOARD OF PUBLIC WORKS
JANUARY 8, 1964 CHAIRMAN
ATTEST: SECRETARY

Standard Plan No.153.1

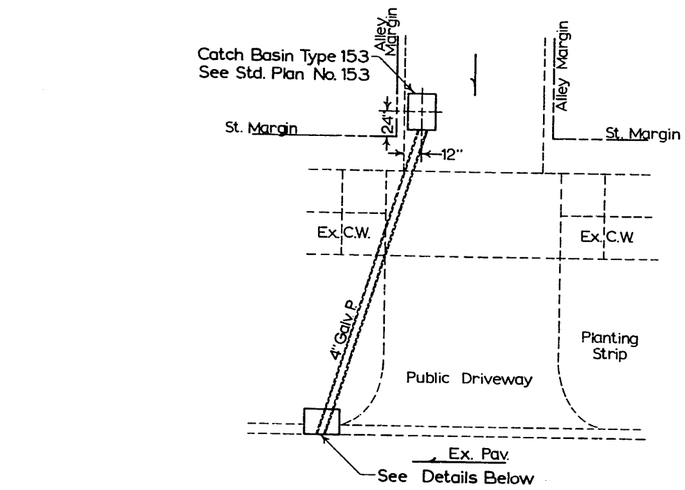

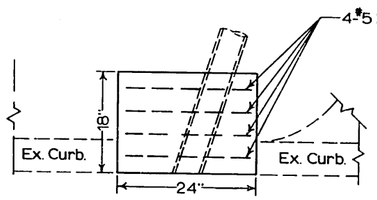

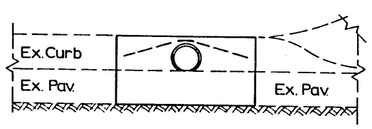

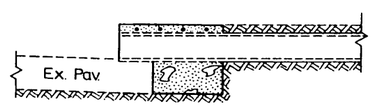

When Curb is existing remove and replace as shown.

DO NOT SCALE

CITY OF SEATTLE
DEPARTMENT OF ENGINEERING

Type 153 Catch Basin Installation

APPROVED BY THE BOARD OF PUBLIC WORKS
JANUARY 8, 1964 — CHAIRMAN
ATTEST: — SECRETARY

Standard Plan No.154

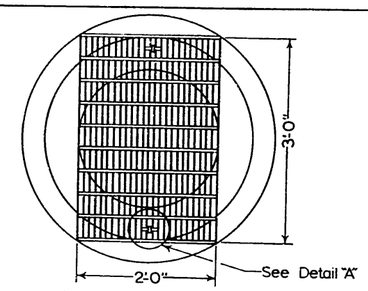

Type A Grate

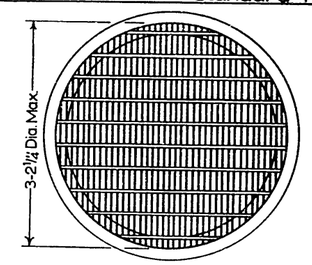

Type B Grate

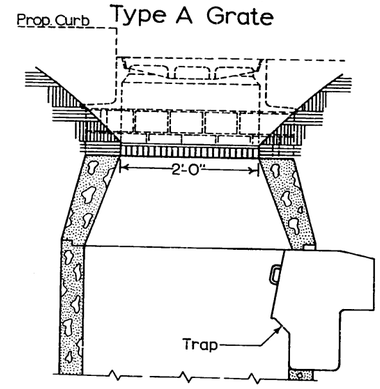

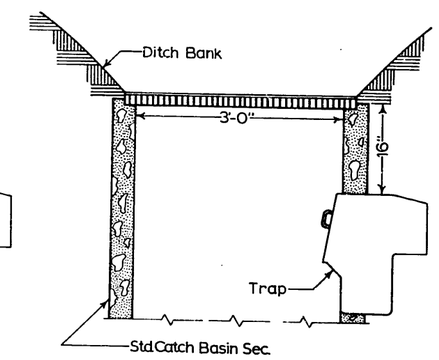

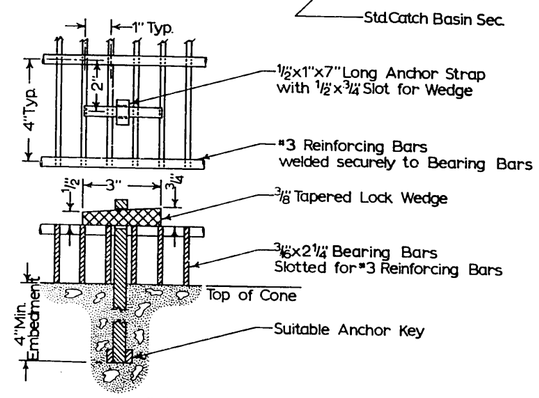

Detail "A"

To be used in Roadway Ditches and areas not graded to Std. Section.

Anchor Strap shall be set so that Locking Wedge when driven into slot, securely holds Grate in place and will not drop out.

All Steel to be Galvanized after Fabrication in accordance with ASTM 4-123, for a final coating of 0.003 inch or more as determined by a magnetic gauge.

DO NOT SCALE

CITY OF SEATTLE
DEPARTMENT OF ENGINEERING

Type 154 Temporary Catch Basins

APPROVED BY THE BOARD OF PUBLIC WORKS
JANUARY 8, 1964 — CHAIRMAN
ATTEST: — SECRETARY

Standard Plan No.155

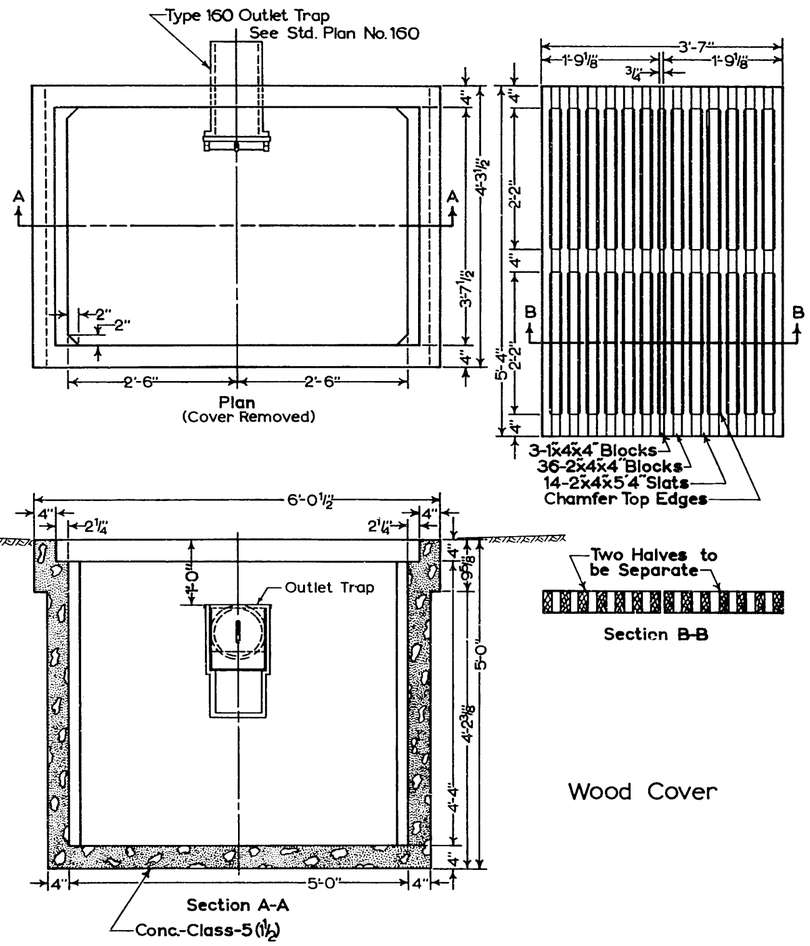

All Lumber to be Douglas Fir "Construction Stress Grade", S-4-S, Creosoted by Pressure Process. See Std. Specs. Sec. 90-3.02.

DO NOT SCALE

CITY OF SEATTLE
DEPARTMENT OF ENGINEERING

Type 155 Catch Basin

APPROVED BY THE BOARD OF PUBLIC WORKS
JANUARY 8, 1964 CHAIRMAN
ATTEST: SECRETARY

Standard Plan No.156

Bar List
All dimensions are out to out

Mark	Location	No.	Size	Length	Bending Diagram
4	Cover Slab 156 N Bottom-Long.	6	6	Var.	L=2ea.@ 4'-5"; 4'-1" & 3'-6"
5	Cover Slab 156 N Bottom-Transv.	4	6	Var.	L=2ea.@ 4'-2" & 3'-8"
6	Cover Slab 156 N Bottom-Diag.	4	6	3'-2"	Str.
7	Cover Slab 156 N Top	1	4	14'-11"	
4	Cover Slab 156 P Bottom-Long.	6	6	Var.	L=2 @ 4'-9"; 1ea.@ 4'-7"; 4'-3"; 3'-9"; & 3'-0"
5	Cover Slab 156 P Bottom-Transv.	5	6	Var.	L=2ea.@ 4'-2"; & 3'-8"; 1@ 2'-9"
6	Cover Slab 156 P Bottom-Diag.	4	6	Var.	Str. 2ea.@ 3'-9"; & 3'-2"
7	Cover Slab 156 P Top	1	4	14'-11"	
4	Cover Slab 156 R Bottom-Long.	5	6	Var.	L=1ea.@ 4'-9"; 4'-8"; 4'-6"; 4'-1" & 3'-7"
5	Cover Slab 156 R Bottom-Transv.	5	6	Var.	L=2ea.@ 4'-2"; 3'-8"; 1@ 2'-5"
6	Cover Slab 156 R Bottom-Diag.	4	6	Var.	Str. 2ea.@ 4'-4"; & 2'-5"
7	Cover Slab 156 R Top	1	4	14'-11"	
8	156 S	2	3	9'-10"	

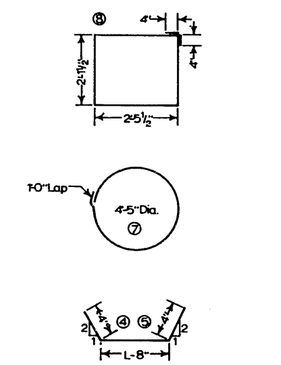

All Steel to be deformed bars conforming to ASTM-A15 and shall have a minimum cover of 2".

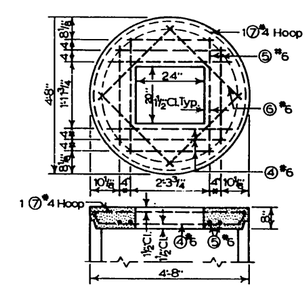

156 N

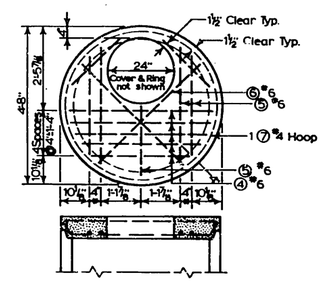

156 R

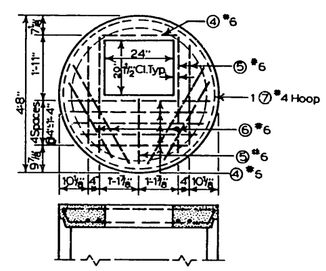

156 P

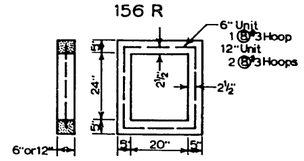

156 S

CITY OF SEATTLE
DEPARTMENT OF ENGINEERING

Catch Basin Inlet-Precast Cover and Extension Units

APPROVED BY THE BOARD OF PUBLIC WORKS
JANUARY 8, 1964 CHAIRMAN
ATTEST: SECRETARY

Standard Plan No.157

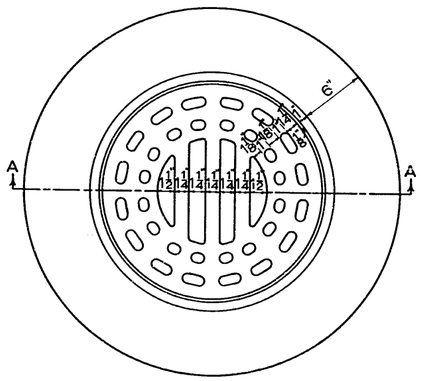

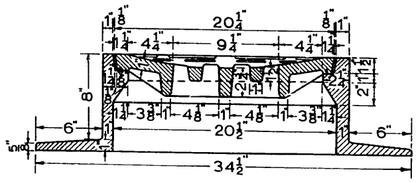

Section A-A

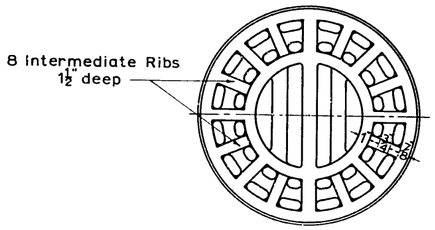

Bottom View of Grate

Ring and Grate shall be tested for accuracy of fit and shall be marked in sets for delivery. See Std. Specs. Sec. 113.

All Castings to have a bituminous coating according to Std. Specs. Sec. 63.208.

DO NOT SCALE

CITY OF SEATTLE
DEPARTMENT OF ENGINEERING

Type 157-18inch Circular Inlet Ring and Grate

APPROVED BY THE BOARD OF PUBLIC WORKS
JANUARY 8, 1964 CHAIRMAN
ATTEST: SECRETARY

Standard Plan No.158

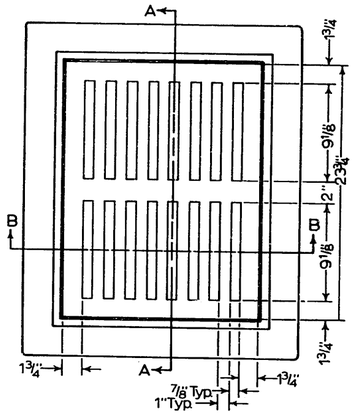

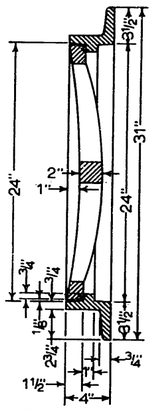

Section A-A

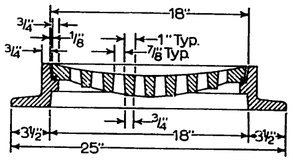

Section B-B

Frame and Cover shall be tested for accuracy of fit and shall be marked in sets for delivery. See Std. Specs. Sec. 113.

All Castings to have a bituminous coating according to Std. Specs. Sec. 63.208.

DO NOT SCALE

CITY OF SEATTLE
DEPARTMENT OF ENGINEERING

Type 158 Inlet Frame and Grate

APPROVED BY THE BOARD OF PUBLIC WORKS
JANUARY 8, 1964 CHAIRMAN
ATTEST: SECRETARY

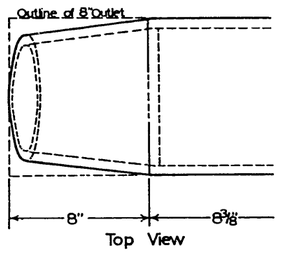

Top View

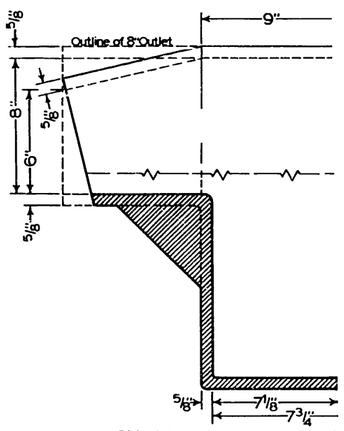

Side View and Partial Secti

Type 160A=6" Outlet

Type 160B=8" Outlet

All Castings to have a bituminous coating accord
Specs. Sec. 63.208.

There is no
Standard Plan
#159
in the book
at the time of filming.

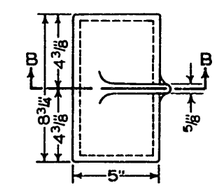

Top View Type B Trap

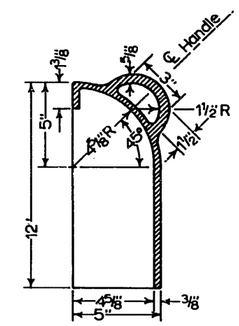

Section B-B
Type 162B Trap

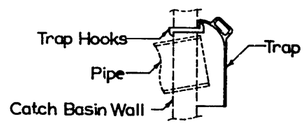

Trap Installation

.D. Outlet Pipe.

r 6" I.D. Outlet Pipe.

g according to Std.

DO NOT SCALE

CITY OF SEATTLE
DEPARTMENT OF ENGINEERING

Type 162 Outlet Trap

APPROVED BY THE BOARD OF PUBLIC WORKS
JANUARY 6, 1964 [signature] CHAIRMAN
ATTEST: [signature] SECRETARY

Standard Plan No.160

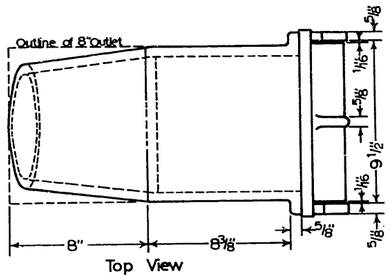

Top View

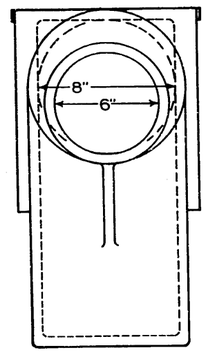

Back View

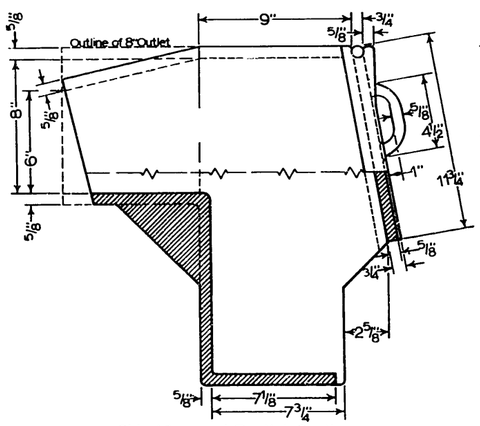

Side View and Partial Section

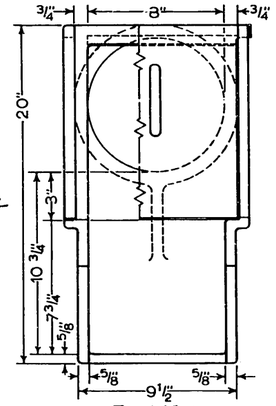

Front View

Type 160A=6"Outlet

Type 160B=8"Outlet

All Castings to have a bituminous coating according to Std. Specs. Sec. 63.208.

DO NOT SCALE

CITY OF SEATTLE
DEPARTMENT OF ENGINEERING

Type 160 Outlet Trap

APPROVED BY THE BOARD OF PUBLIC WORKS
JANUARY 8, 1964 CHAIRMAN
ATTEST: SECRETARY

Standard Plan No.162

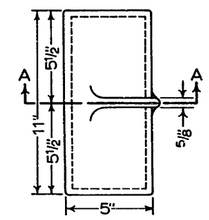

Top View Type A Trap

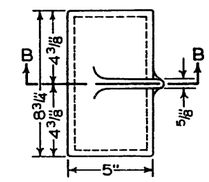

Top View Type B Trap

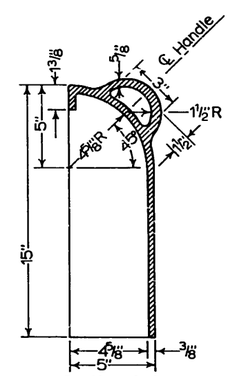

Section A-A
Type 162A Trap

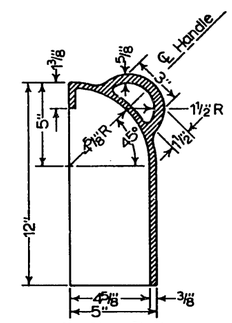

Section B-B
Type 162B Trap

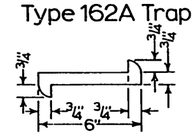

Trap Hook
Trap Hooks may be round or square in cross-section.

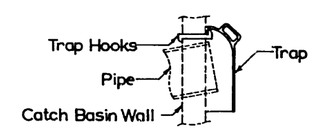

Trap Installation

Type 162A Trap to be used with 8" I.D. Outlet Pipe.

Type 162B Trap to be used with 4" or 6" I.D. Outlet Pipe.

Trap may be cast Iron or cast Steel.

All Castings to have a bituminous coating according to Std. Specs. Sec. 63.208.

DO NOT SCALE

CITY OF SEATTLE
DEPARTMENT OF ENGINEERING

Type 162 Outlet Trap

APPROVED BY THE BOARD OF PUBLIC WORKS
JANUARY 8, 1964 CHAIRMAN
ATTEST: SECRETARY

There is no
Standard Plan
#161
in the book
at the time of filming.

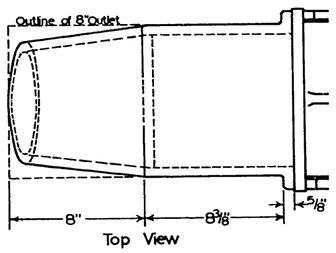

Top View

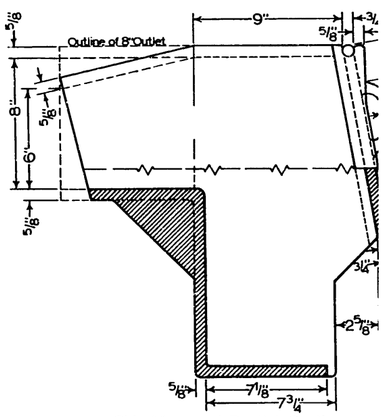

Side View and Partial Section

Type 160A=6" Outlet

Type 160B=8" Outlet

All Castings to have a bituminous coating according t
Specs. Sec. 63.208.

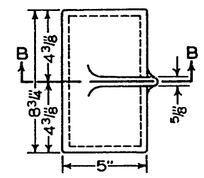

Top View Type B Trap

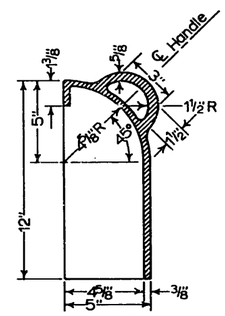

Section B-B
Type 162B Trap

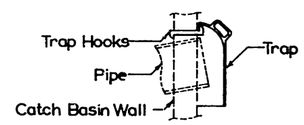

Trap Installation

tlet Pipe.

). Outlet Pipe.

ording to Std.

DO NOT SCALE

CITY OF SEATTLE
DEPARTMENT OF ENGINEERING

Type 162 Outlet Trap

APPROVED BY THE BOARD OF PUBLIC WORKS
JANUARY 6, 1964 CHAIRMAN
ATTEST: SECRETARY

There is no

Standard Plan

#163

in the book

at the time of filming.

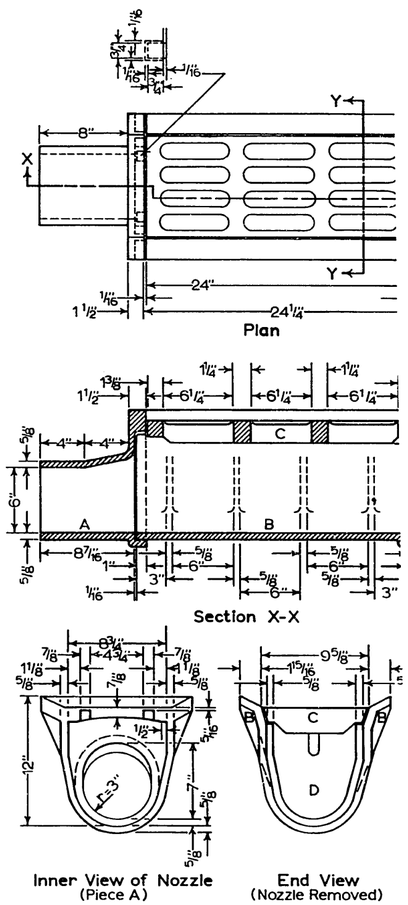

For Inlet Installation see Std. Plan No.164.1.

All Castings to have a bituminous coating according to Sta
Specs. Sec. 63.208.

Standard Plan No.164.1

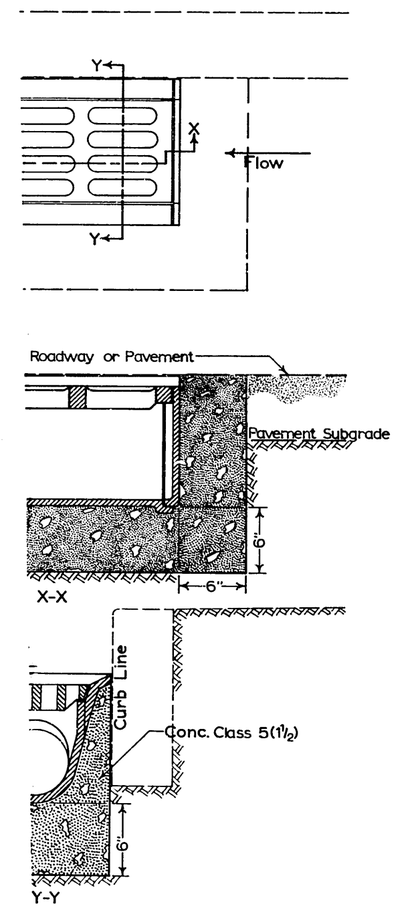

DO NOT SCALE

CITY OF SEATTLE
DEPARTMENT OF ENGINEERING

Type 164 Inlet Installation

APPROVED BY THE BOARD OF PUBLIC WORKS
JANUARY 8, 1964 CHAIRMAN
ATTEST: SECRETARY

Standard Plan No.164

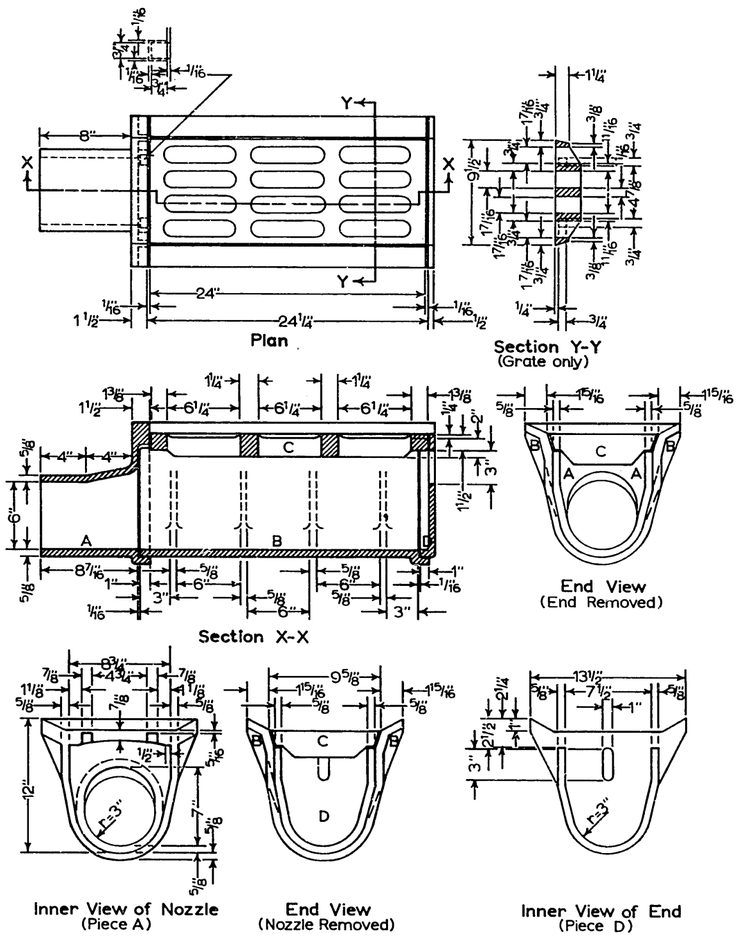

For Inlet Installation see Std. Plan No.164.1.

All Castings to have a bituminous coating according to Std. Specs. Sec. 63.208.

DO NOT SCALE

CITY OF SEATTLE
DEPARTMENT OF ENGINEERING

Type 164 Inlet
Castings and Assembly

APPROVED BY THE BOARD OF PUBLIC WORKS
JANUARY 8, 1964 CHAIRMAN
ATTEST: SECRETARY

Standard Plan No.164.1

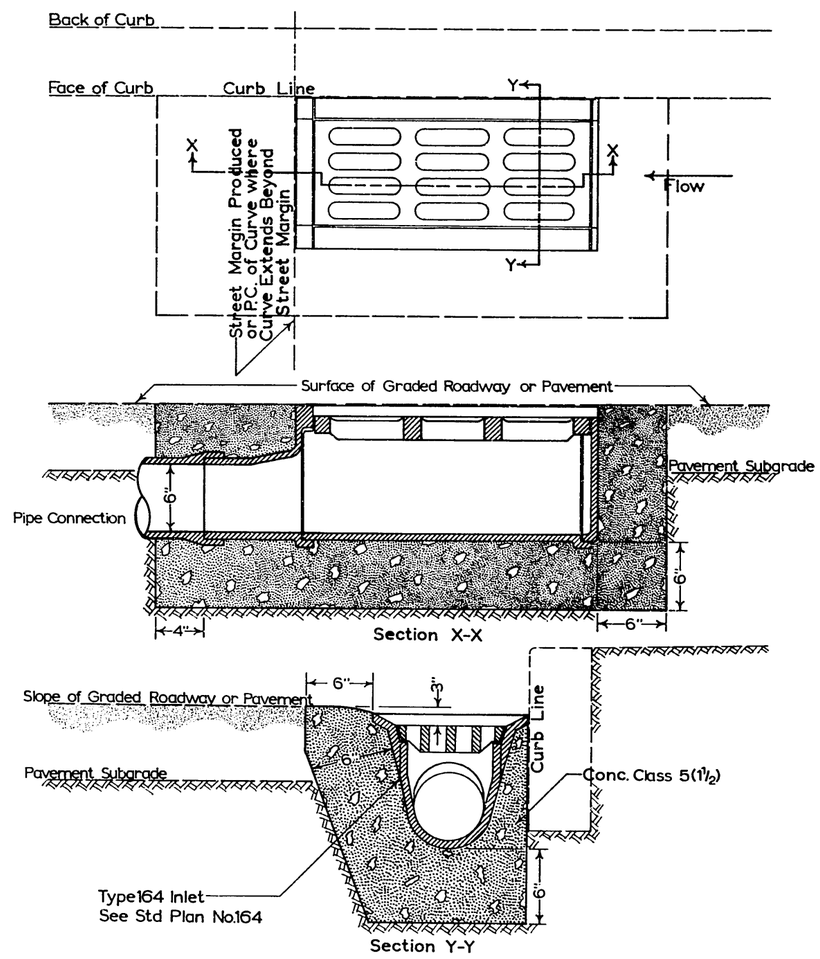

Frame and Grate are to be set so the Curb Face will not interfere with removal of Grate.

DO NOT SCALE

CITY OF SEATTLE
DEPARTMENT OF ENGINEERING

Type 164 Inlet Installation

APPROVED BY THE BOARD OF PUBLIC WORKS
JANUARY 8, 1964 CHAIRMAN
ATTEST: SECRETARY

Standard Plan No.165

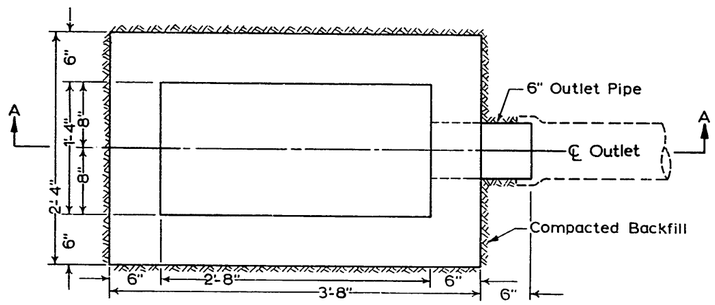

Section B-B

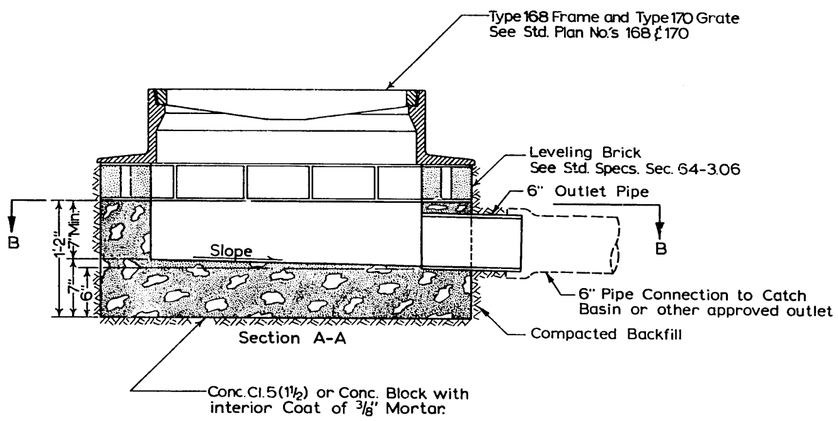

Section A-A

Cast Outlet Pipe of Inlet included in payment for Inlet.

Pipe Connection payment separate from payment for Inlet.
See Std. Specs Sec. 69-3.04

For Inlet Installation See Std Plan No.165.1

DO NOT SCALE

CITY OF SEATTLE
DEPARTMENT OF ENGINEERING

Type 165 Inlet

APPROVED BY THE BOARD OF PUBLIC WORKS
JANUARY 8, 1964 _____ CHAIRMAN
ATTEST: _____ SECRETARY

Standard Plan No.165.1

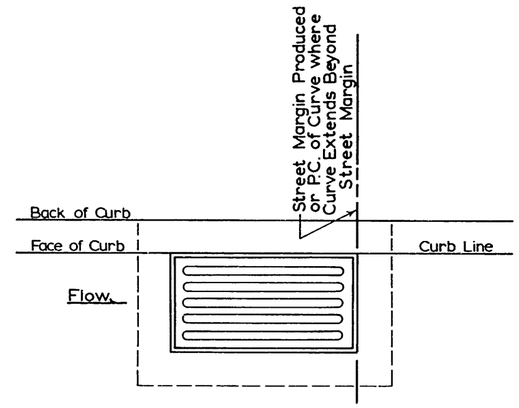

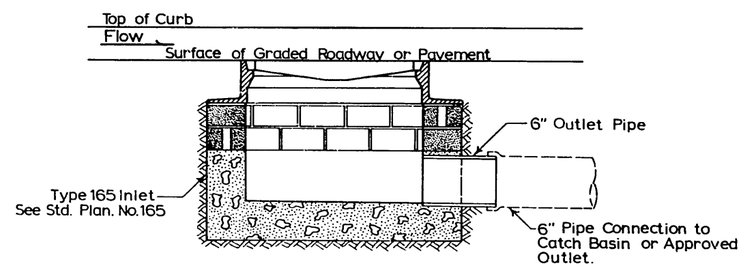

Frame and Grate are to be set so the Curb Face will not interfere with removal of Grate

DO NOT SCALE

CITY OF SEATTLE
DEPARTMENT OF ENGINEERING

Type 165 Inlet Installation

APPROVED BY THE BOARD OF PUBLIC WORKS
JANUARY 8, 1964 _____ CHAIRMAN
ATTEST: _____ SECRETARY

Standard Plan No.166

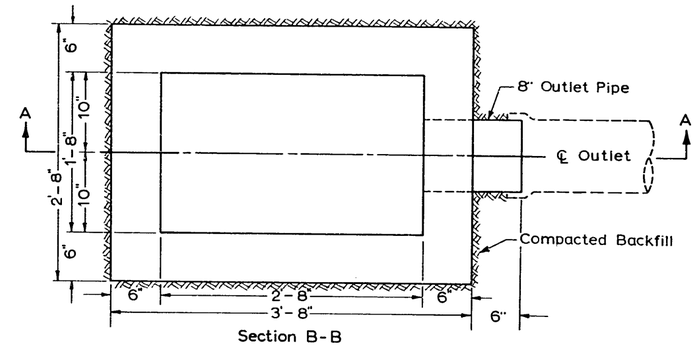

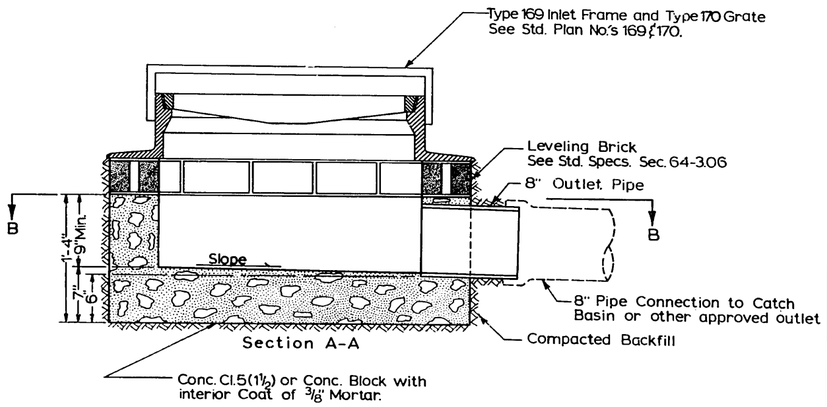

Cast Outlet Pipe of Inlet included in payment for Inlet

Pipe Connection payment separate from payment for Inlet.
See Std. Specs. Sec. 69-3.04

For Installation See Std. Plan No.166.1

DO NOT SCALE

CITY OF SEATTLE
DEPARTMENT OF ENGINEERING

Type166 Inlet

APPROVED BY THE BOARD OF PUBLIC WORKS
JANUARY 8, 1964 CHAIRMAN
ATTEST: SECRETARY

Standard Plan No.166.1

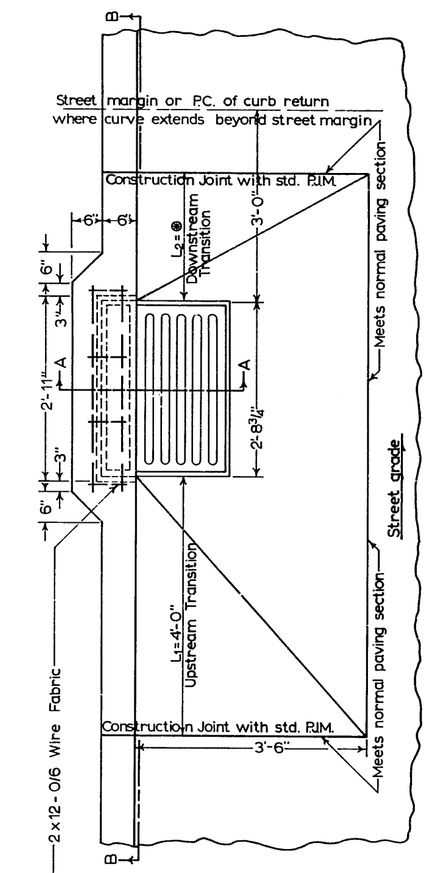

$L_2 = ⊗$
Where street grade is 8% or less ____ $L_2 = 3'-0"$
Where street grade exceeds 8% ____ $L_2 = 2'-0"$
Where installed at sump ____ L_1 & $L_2 = 4'-0"$

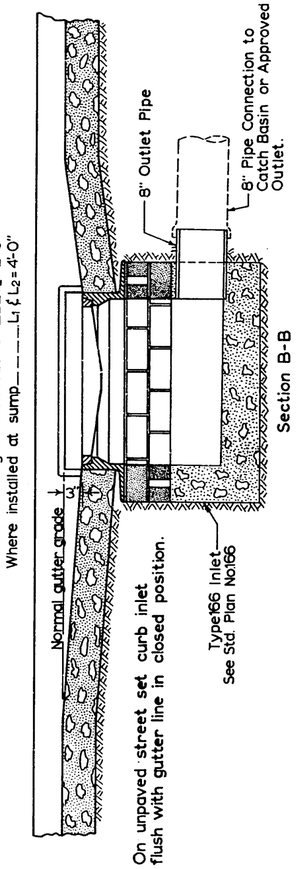

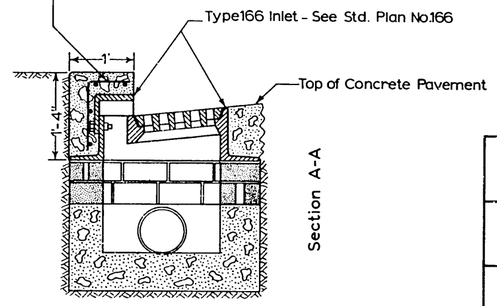

DO NOT SCALE

CITY OF SEATTLE
DEPARTMENT OF ENGINEERING

Type166 Inlet Installation

APPROVED BY THE BOARD OF PUBLIC WORKS
JANUARY 8, 1964 CHAIRMAN
ATTEST: SECRETARY

Standard Plan No.167

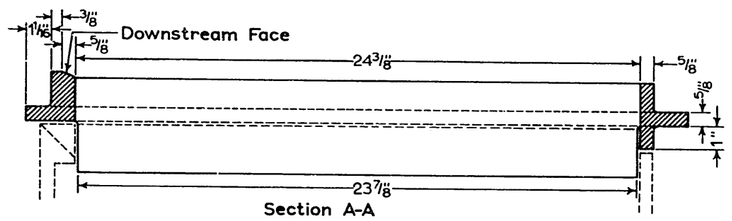

Section A-A

These Dimensions may be changed if necessary to fit Existing Castings.....

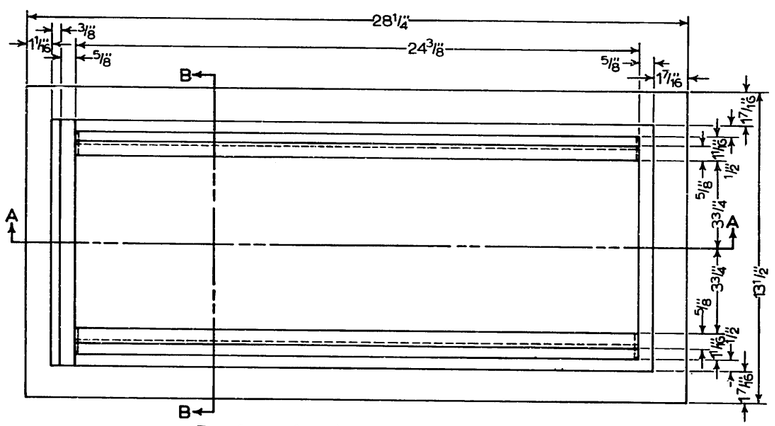

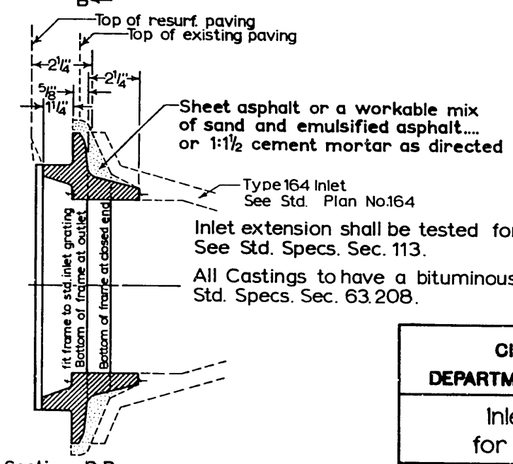

Inlet extension shall be tested for accuracy of fit. See Std. Specs. Sec. 113.

All Castings to have a bituminous coating according to Std. Specs. Sec. 63.208.

Section B-B

DO NOT SCALE

CITY OF SEATTLE
DEPARTMENT OF ENGINEERING

Inlet Extension for Type 164 Inlet

APPROVED BY THE BOARD OF PUBLIC WORKS
JANUARY 6, 1964 — CHAIRMAN
ATTEST: — SECRETARY

Standard Plan No.168

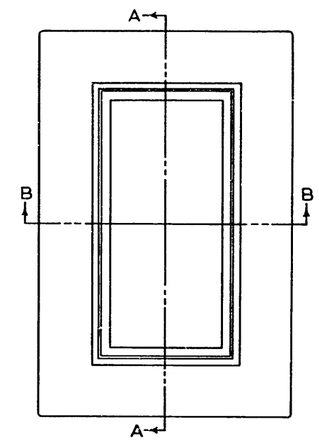

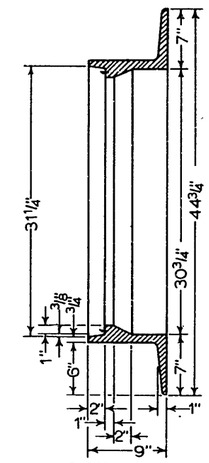

Section A-A

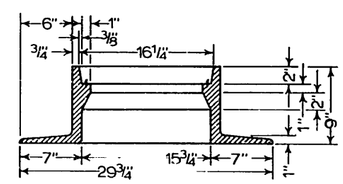

Section B-B

Use Type 170 Inlet Grate

Frame and Grate shall be tested for accuracy of fit and shall be marked in sets for delivery See Std. Specs Sec. 113.

All Castings to have a bituminous coating according to Std. Specs Sec 63.208.

DO NOT SCALE

CITY OF SEATTLE
DEPARTMENT OF ENGINEERING

Type 168 Inlet Frame

APPROVED BY THE BOARD OF PUBLIC WORKS
JANUARY 6, 1964 — CHAIRMAN
ATTEST: — SECRETARY

Standard Plan No.169

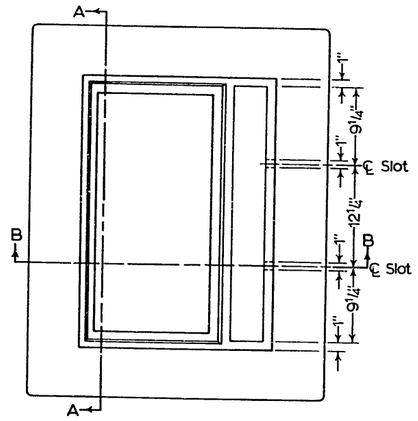

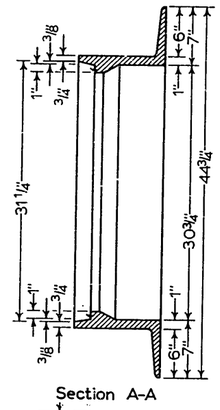

Section A-A

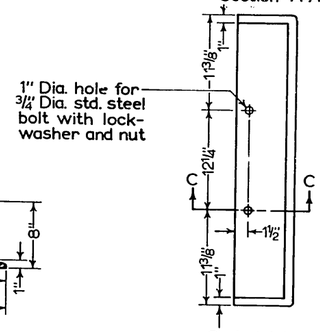

Curb Inlet

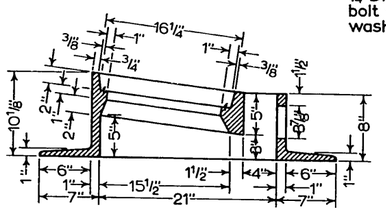

Section B-B

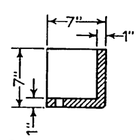

Section C-C

ISOMETRIC VIEW

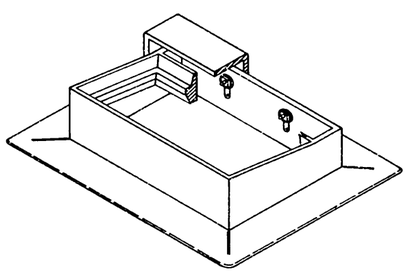

Use Type 170 Inlet Grate

Frame and Grate shall be tested for accuracy of fit and shall be marked in sets for delivery. See Std. Specs. Sec. 113.

All Castings to have a bituminous coating according to Std. Specs. Sec. 63.208.

DO NOT SCALE

CITY OF SEATTLE
DEPARTMENT OF ENGINEERING

Type 169 Inlet Frame

APPROVED BY THE BOARD OF PUBLIC WORKS
JANUARY 8, 1964 — CHAIRMAN
ATTEST: — SECRETARY

Standard Plan No.170

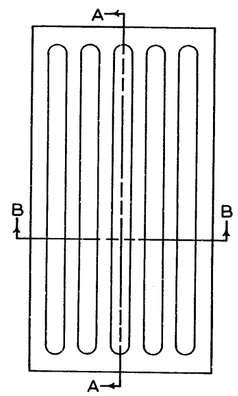

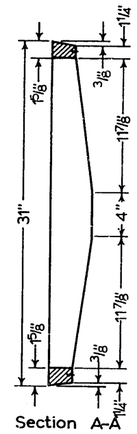

Section A-A

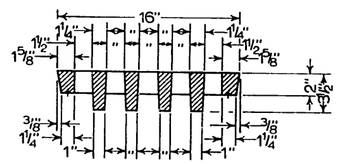

Section B-B

For use with Type 168 and 169 Inlet Frames.

Frame and Grate shall be tested for accuracy of fit and shall be marked in sets for delivery. See Std Specs. Sec. 113.

All Castings to have a bituminous coating according to Std. Specs. Sec. 63.208.

DO NOT SCALE

CITY OF SEATTLE
DEPARTMENT OF ENGINEERING

Type 170 Inlet Grate

APPROVED BY THE BOARD OF PUBLIC WORKS
JANUARY 8, 1964 — CHAIRMAN
ATTEST: — SECRETARY

Standard Plan No.170

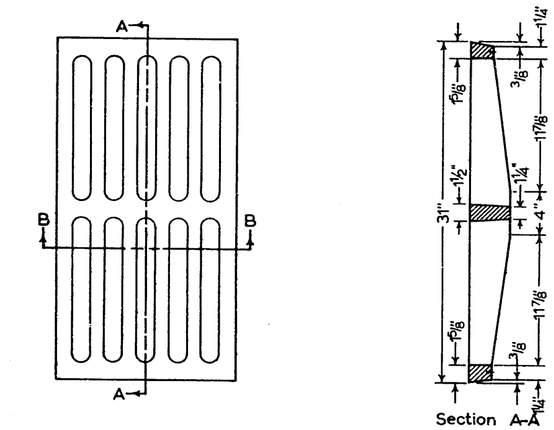

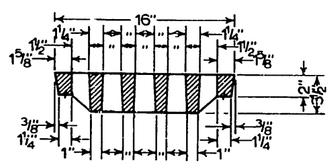

For use with Type 168
and 169 Inlet Frames.

Frame and Grate shall be tested for accuracy of fit and shall be marked in sets for delivery. See Std Specs. Sec. 113.

All Castings to have a bituminous coating according to Std. Specs. Sec. 63.208.

DO NOT SCALE

CITY OF SEATTLE
DEPARTMENT OF ENGINEERING

Type 170 Inlet Grate

Revised 1-8-65

APPROVED BY THE BOARD OF PUBLIC WORKS
JANUARY 8, 1964 CHAIRMAN
ATTEST: SECRETARY

Standard Plan No.170

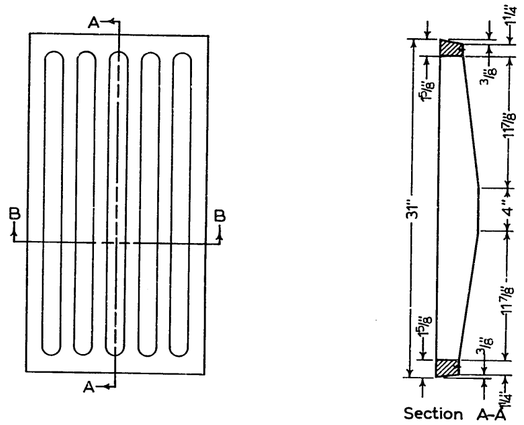

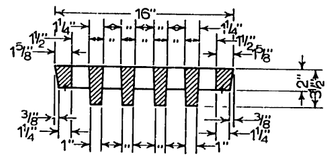

For use with Type 168
and 169 Inlet Frames.

Frame and Grate shall be tested for accuracy of fit and shall be marked in sets for delivery. See Std Specs. Sec. 113.

All Castings to have a bituminous coating according to Std. Specs. Sec. 63.208.

DO NOT SCALE

CITY OF SEATTLE
DEPARTMENT OF ENGINEERING

Type 170 Inlet Grate

APPROVED BY THE BOARD OF PUBLIC WORKS
JANUARY 8, 1964 CHAIRMAN
ATTEST: SECRETARY

Standard Plan No. 171

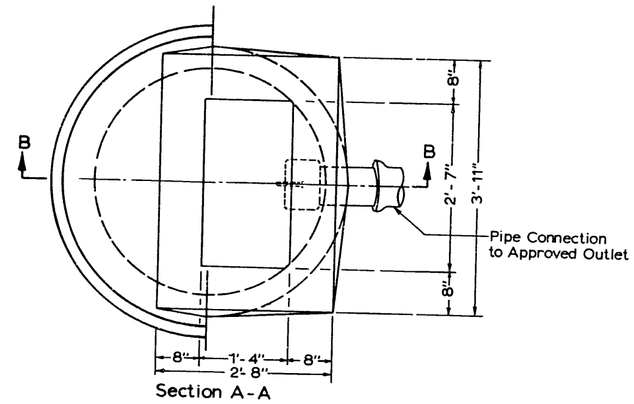

Section A-A

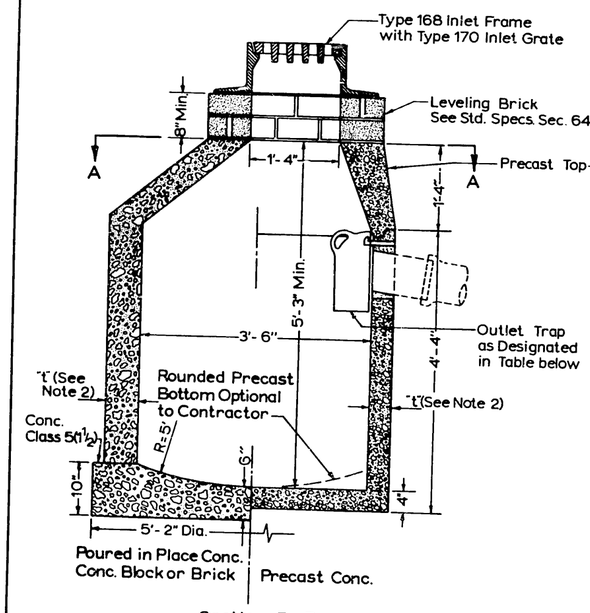

Section B-B

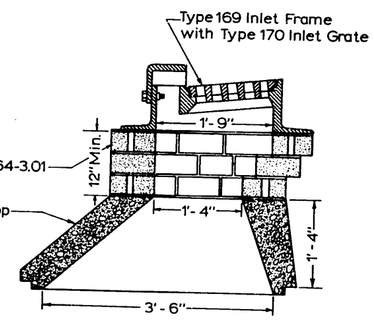

C.B. Type Specified	Casting Plan	
	Frame & Grate	Outlet Trap
171A	No. 168	No. 160A
171B	No. 168	No. 160B
171C	No. 168	No. 162A
171D	No. 168	No. 162B
171E	No. 169	No. 160B
171F	No. 169	No. 162A

DO NOT SCALE

Notes

1. See Std. Specs. Sec. 64 for further requirements.
2. Values of "t"
   Cement Concrete t = 6" Brick t = 8"
   Concrete Blocks t = 6" Precast Concrete t = 4" Min.
3. Type 168 Inlet Frame shall be set as shown on Std. Plan No. 165.1
4. Type 169 Inlet Frame shall be set as shown on Std. Plan No. 166.1

CITY OF SEATTLE
DEPARTMENT OF ENGINEERING

Type 171 Inlet Top
Catch Basin

APPROVED BY THE BOARD OF PUBLIC WORKS
Jan 26, 1965 — CHAIRMAN
ATTEST: — SECRETARY

There are no

Standard Plans

#172, #173 & #174

in the book

at the time of filming.

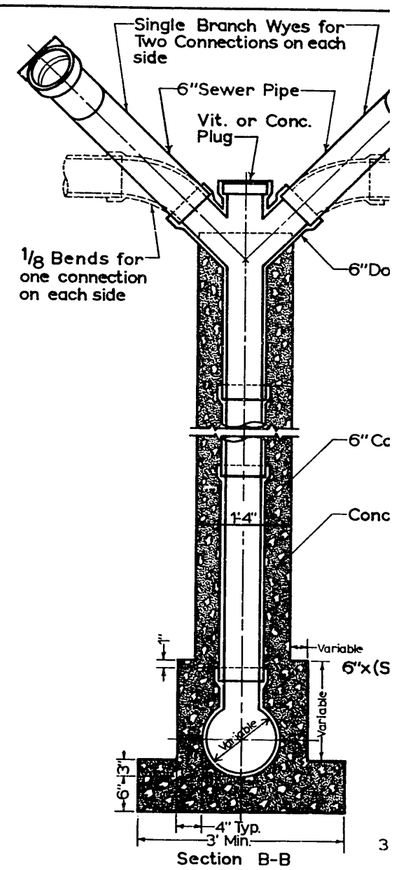

Conc. Encasement may be C
using fiber forms (Sonotube) lef
or formed as a Square Section

Standard Plan No.176

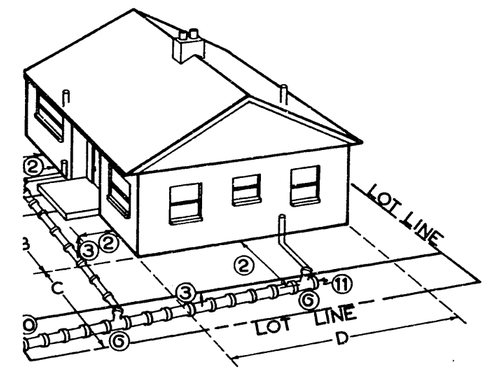

uction requires a permit
ent of fee.
sket pipe only.

operty and dimensions A, B, C, and D that
the house are mandatory for issuance

must be connected to the sewer.
drainage may be connected, except to

use.

erty line.
line.
etween bends. Make all changes in grade
e. 90° change with wye and 1/8 bend.
r.
street, and elsewhere as directed.
n property. 2% min. grade, 100% (45°) max.

st be done by a licensed sewer contractor.

grade.

DO NOT SCALE

CITY OF SEATTLE
DEPARTMENT OF ENGINEERING

Sanitary Side Sewer Installation

APPROVED BY THE BOARD OF PUBLIC WORKS
JANUARY 8, 1964 CHAIRMAN
ATTEST: SECRETARY

Standard Plan No.175

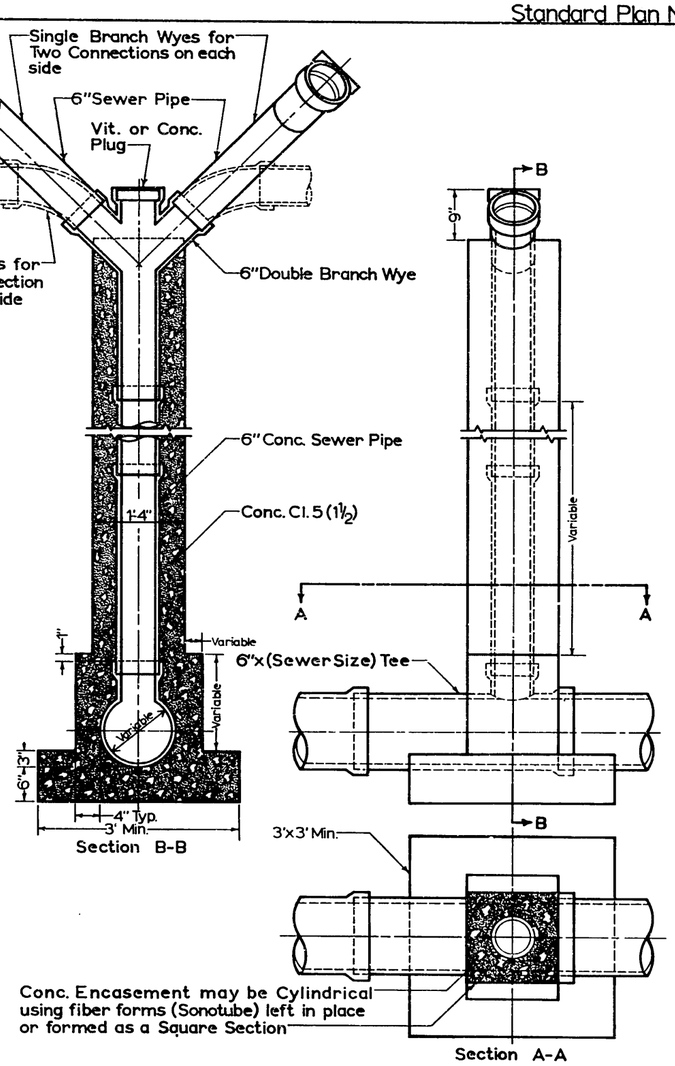

DO NOT SCALE

CITY OF SEATTLE
DEPARTMENT OF ENGINEERING

Vertical Connection

APPROVED BY THE BOARD OF PUBLIC WORKS
JANUARY 8, 1964 — CHAIRMAN
ATTEST: — SECRETARY

Standard Plan No.176

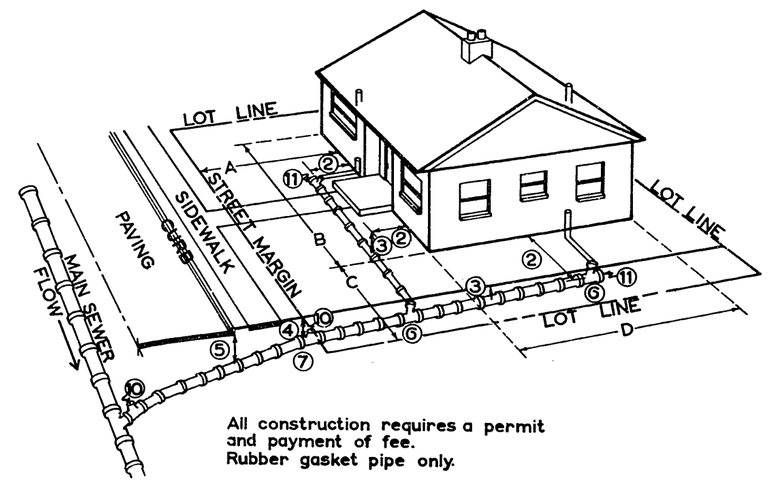

All construction requires a permit and payment of fee.
Rubber gasket pipe only.

Complete legal description of property and dimensions A, B, C, and D that show the size and location of the house are mandatory for issuance of permit.

1. All house plumbing outlets must be connected to the sewer. No downspouts or storm drainage may be connected, except to separate storm sewer.
2. **30" min. distance from house.**
3. **18" min. coverage of pipe.**
4. **30" min coverage at property line.**
5. **5' min coverage at curb line.**
6. Lay pipe in straight line between bends. Make all changes in grade or line with 1/8 bend or wye. 90° change with wye and 1/8 bend.
7. Standard 4" to 6" increaser.
8. 6" sewer pipe--min. size in street, and elsewhere as directed.
9. 4" sewer pipe--min. size on property. 2% min. grade, 100% (45°) max. grade.
10. Cleanout "T" with plug.
11. Conc. or Vit. plug.
12. **Construction in street must be done by a licensed sewer contractor.**

Method of obtaining 2% min. grade.

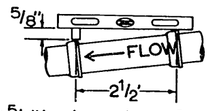

Attach 5/8" knob or piece of scrap material to level. Lay level on bells of pipe with knob pointing in direction of flow. Level bubble must read level. Attach straight board to short levels to reach both bells.

DO NOT SCALE

CITY OF SEATTLE
DEPARTMENT OF ENGINEERING

Sanitary Side Sewer Installation

APPROVED BY THE BOARD OF PUBLIC WORKS
JANUARY 8, 1964 — CHAIRMAN
ATTEST: — SECRETARY

Standard Plan No. 177

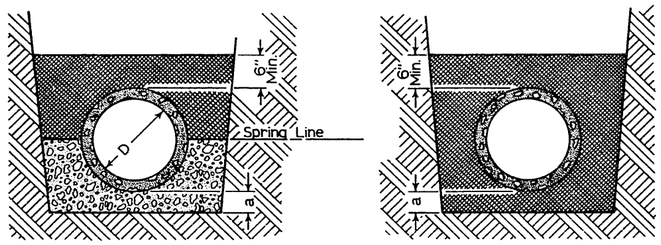

Class "A" Bedding
(Arch Encasement)

Class "B" Bedding

Type 7 aggregate
See Std. Specs. Sec. 26-3.05

Concrete Class 5 ($1\frac{1}{2}$)

a=4" When "D" is less than 30"

a=6" When "D" is 30" or more.

Reinforcement shall be specified on the Construction Drawing for Class "A" Bedding.

Concrete shall have a maximum water-cement ratio of 8:2 and a minimum cement factor of 4.

DO NOT SCALE

CITY OF SEATTLE
DEPARTMENT OF ENGINEERING

Pipe Bedding

APPROVED BY THE BOARD OF PUBLIC WORKS
JANUARY 8, 1964 — CHAIRMAN
ATTEST: — SECRETARY

Standard Plan No. 178

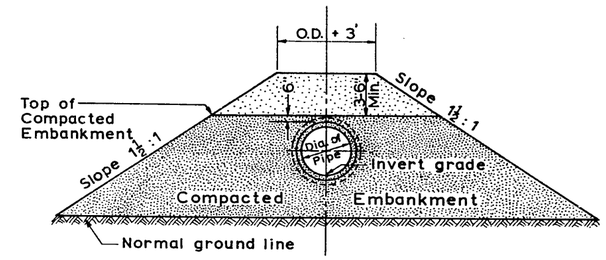

Note:
Normal ground line and depth of compacted embankment shall be determined by the City Engineer.

Sewers Constructed in Fill

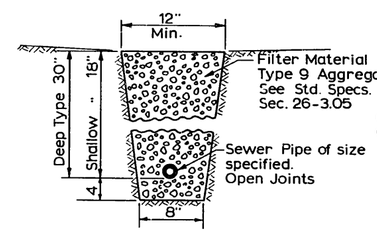

Sewer Pipe Drains

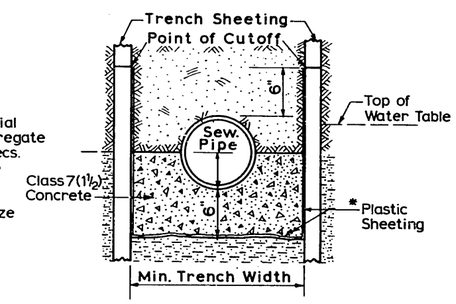

Sewer Support in Quicksand

* Where Well Points or other positive means for lowering of water table are used during the pipe laying operations until concrete has set hard, plastic sheeting will not be required.

DO NOT SCALE

CITY OF SEATTLE
DEPARTMENT OF ENGINEERING

Sewer Construction Details

APPROVED BY THE BOARD OF PUBLIC WORKS
JANUARY 8, 1964 — CHAIRMAN
ATTEST: — SECRETARY

Standard Plan No. 177

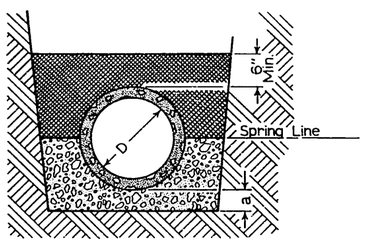

Class "A" Bedding
(Arch Encasement)

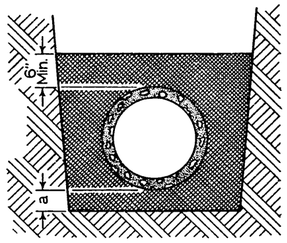

Class "B" Bedding

Type 7 aggregate
See Std. Specs. Sec. 26-3.05

Concrete Class 5 ($1\frac{1}{2}$)

a=4" When "D" is less than 30"

a=6" When "D" is 30" or more.

Reinforcement shall be specified on the Construction Drawing for Class "A" Bedding.

Concrete shall have a maximum water-cement ratio of 8:2 and a minimum cement factor of 4.

DO NOT SCALE

CITY OF SEATTLE
DEPARTMENT OF ENGINEERING

Pipe Bedding

APPROVED BY THE BOARD OF PUBLIC WORKS
JANUARY 8, 1964 _____ CHAIRMAN
ATTEST: _____ SECRETARY

Standard Plan No. 177

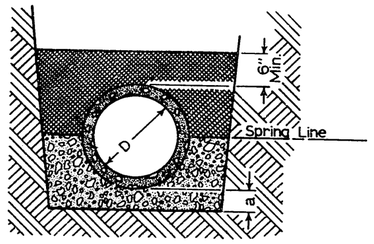

Class "A" Bedding
(Concrete Bedding)

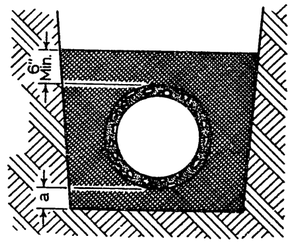

Class "B" Bedding

Type 7 aggregate
See Std. Specs. Sec. 26-3.05

Concrete Class 4 ($1\frac{1}{2}$)

a=4" When "D" is less than 30"

a=6" When "D" is 30" or more.

Reinforcement shall be specified on the Construction Drawing for Class "A" Bedding.

Concrete shall have a maximum water-cement ratio of 8:2 and a minimum cement factor of 4.

DO NOT SCALE

Revised 1-6-65

CITY OF SEATTLE
DEPARTMENT OF ENGINEERING

Pipe Bedding

APPROVED BY THE BOARD OF PUBLIC WORKS
JANUARY 8, 1964 _____ CHAIRMAN
ATTEST: _____ SECRETARY

Standard Plan No. 179

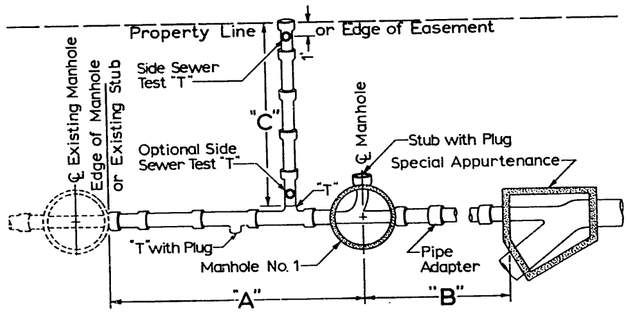

Payment Shall Be Made For

A. 1. Trench Excavation and Backfill per cubic yard for pipe size "A".
2. Pipe Diameter "A" per linear foot.

B. 1. Trench Excavation and Backfill per cubic yard for pipe size "B".
2. Pipe Diameter "B" per linear foot.

C. 1. Trench Excavation and Backfill per cubic yard for pipe size "C".
2. Pipe Diameter "C" per linear foot.

T's or Wyes of proper size, type and with plug---Unit price per each.
In addition to unit price per linear foot for "A" "B" or "C" specified.

Stub including water tight plug---Unit price per size specified per linear foot.

Manholes 12' high and under---Unit price per each and Trench Excavation and Backfill per cubic yard.

Manhole height over 12' as Shafting---per linear foot.

Pipe Adapter (size specified)---Unit price per each.

Special Appurtenance---Unit price per each.

All Pipe shall be measured on the slope along the ℄ of the Pipe.

DO NOT SCALE

CITY OF SEATTLE
DEPARTMENT OF ENGINEERING

Sewer Payment Diagram

APPROVED BY THE BOARD OF PUBLIC WORKS
JANUARY 8, 1964 CHAIRMAN
ATTEST: SECRETARY

Standard Plan No. 180

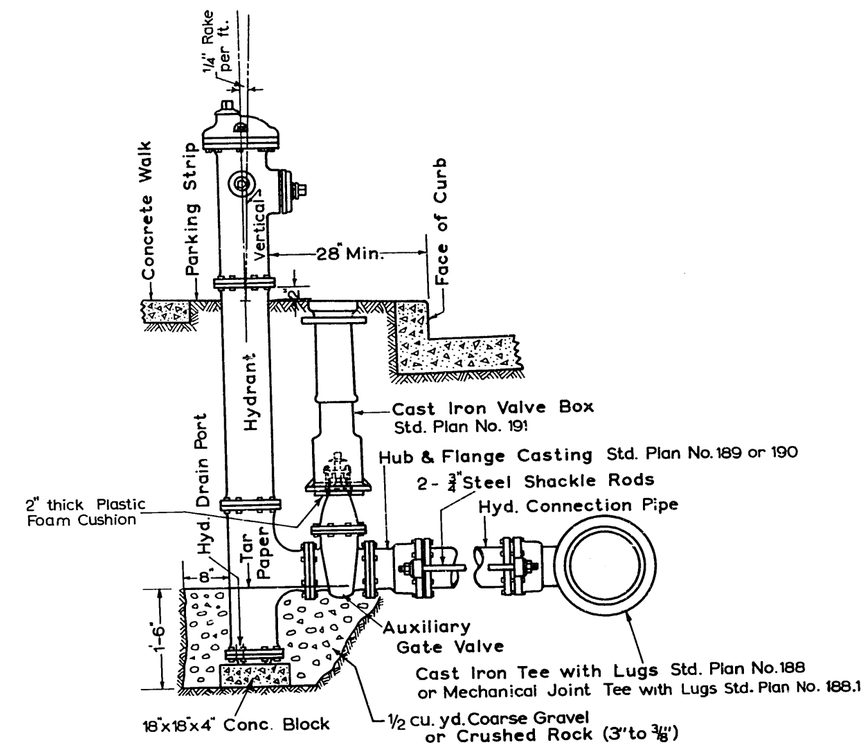

DO NOT SCALE

CITY OF SEATTLE
DEPARTMENT OF ENGINEERING

Type 180 Hydrant Setting - Residential

APPROVED BY THE BOARD OF PUBLIC WORKS
JANUARY 8, 1964 CHAIRMAN
ATTEST: SECRETARY

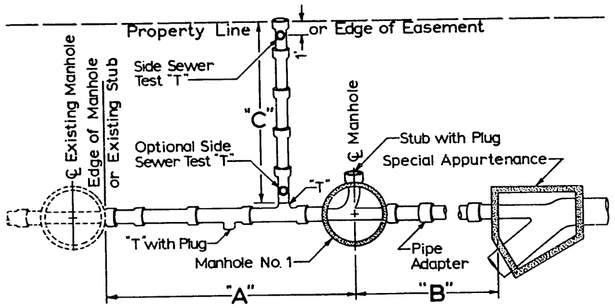

Payment Shall Be Made For:

1. Sewer Trench Excavation and Backfill - Per Lineal foot, or per cubic yard for pipe diameters "A", "B" and "C", respectively, when provided in the proposal.

2. Pipe Diameters "A", "B" and "C" - Per linear foot.

3. Tees or Wyes of proper size, type and with plug - Unit price, each in addition to unit price per foot for "A", "B" or "C" of (2) above specified.

4.1. Manholes, five (5) feet basic height and under - Unit price, each.
4.2. Manholes, height over five (5) feet, as shafting - Per linear foot.
4.3. Stub, including watertight plug - Unit price per size specified.

5. Pipe Adaptor - Unit price per size specified.

All Pipe shall be measured on the slope along the ℄ of the Pipe.

DO NOT SCALE

Revised 1-6-65	CITY OF SEATTLE DEPARTMENT OF ENGINEERING
	Sewer Payment Diagram
	APPROVED BY THE BOARD OF PUBLIC WORKS JANUARY 8, 1964 CHAIRMAN ATTEST: SECRETARY

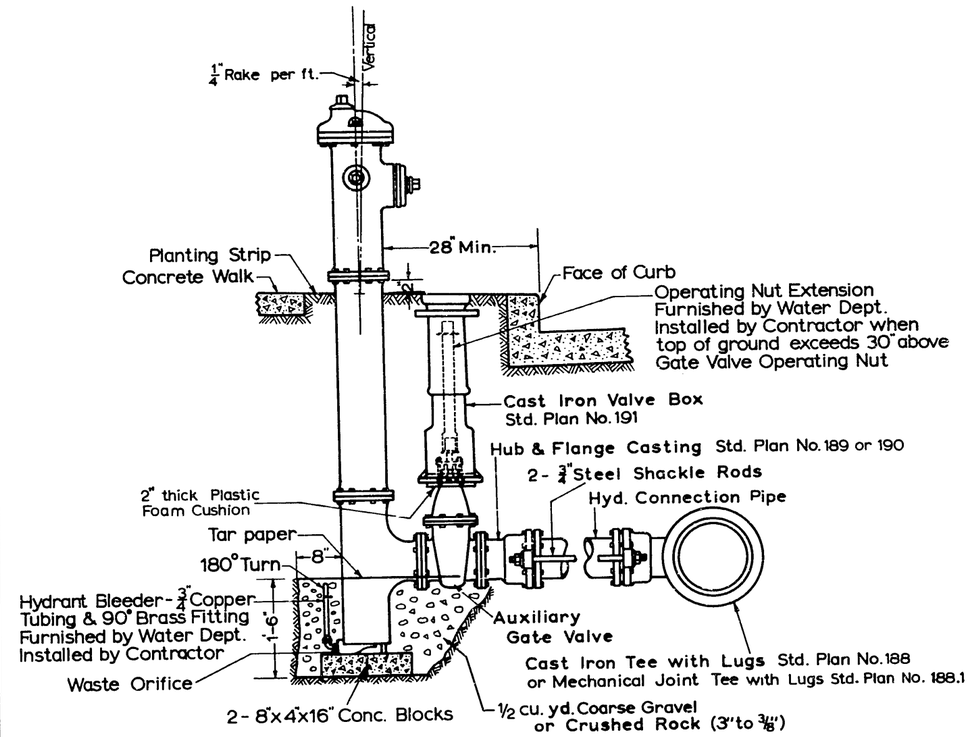

DO NOT SCALE

Revised 1-6-65	CITY OF SEATTLE DEPARTMENT OF ENGINEERING
	Type 180 Hydrant Setting - Residential
	APPROVED BY THE BOARD OF PUBLIC WORKS JANUARY 8, 1964 CHAIRMAN ATTEST: SECRETARY

Standard Plan No.181

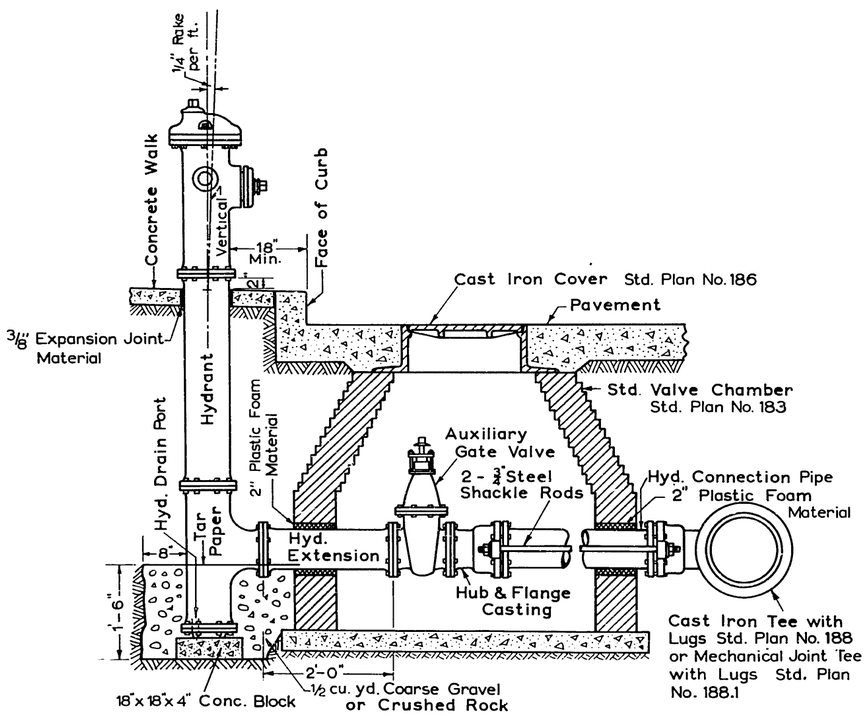

DO NOT SCALE

CITY OF SEATTLE
DEPARTMENT OF ENGINEERING

Type 181 Hydrant Setting - Business Dist.

APPROVED BY THE BOARD OF PUBLIC WORKS
JANUARY 8, 1964 CHAIRMAN
ATTEST: SECRETARY

Standard Plan No.182

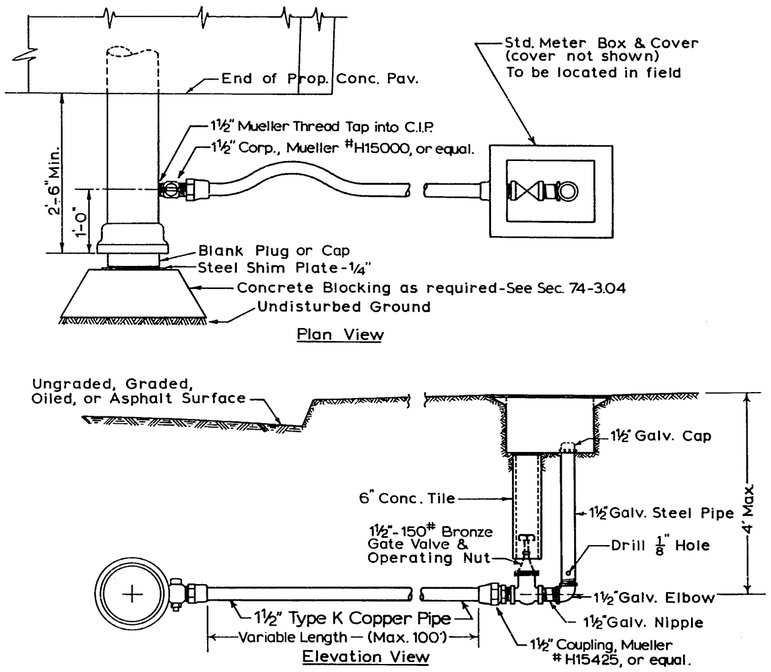

1 1/2" BLOW-OFF DETAIL FOR C.I. PIPE - 4 INCH AND LARGER

DO NOT SCALE

CITY OF SEATTLE
DEPARTMENT OF ENGINEERING

1 1/2 inch Blow-off Assembly

APPROVED BY THE BOARD OF PUBLIC WORKS
JANUARY 8, 1964 CHAIRMAN
ATTEST: SECRETARY

Standard Plan No.181

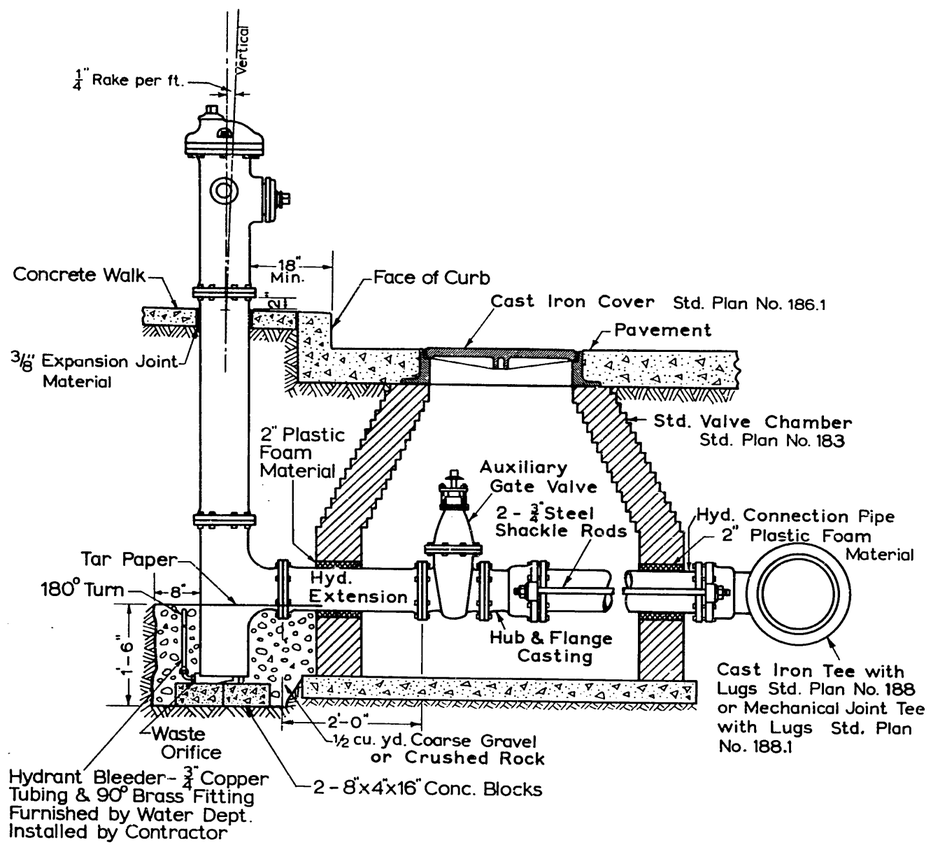

DO NOT SCALE

Revised 1-6-65	CITY OF SEATTLE DEPARTMENT OF ENGINEERING
	Type 181 Hydrant Setting - Business Dist.
	APPROVED BY THE BOARD OF PUBLIC WORKS JANUARY 8, 1964 CHAIRMAN ATTEST: SECRETARY

Standard Plan No.182

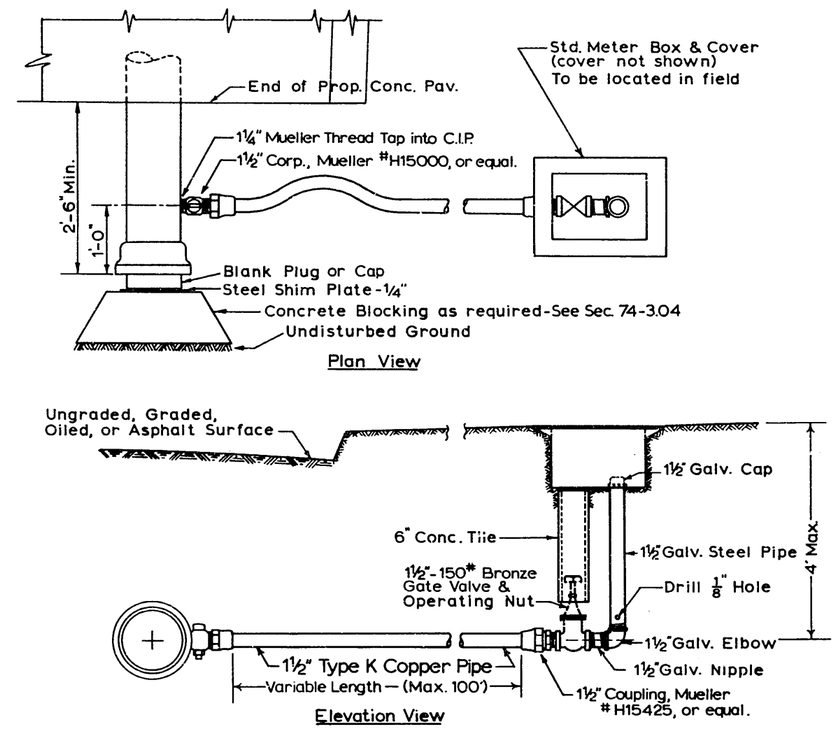

1 1/2 BLOW-OFF DETAIL FOR C.I.PIPE – 6 INCH AND LARGER

FOR 4" PIPE use 1"x1 1/4" Mueller Thread Corp. # H10003 & 1 1/4 I.P. to 1 1/2" Copper Adapter #15450.

DO NOT SCALE

Revised 1-6-65	CITY OF SEATTLE DEPARTMENT OF ENGINEERING
	1 1/2 inch Blow-off Assembly
	APPROVED BY THE BOARD OF PUBLIC WORKS JANUARY 8, 1964 CHAIRMAN ATTEST: SECRETARY

Standard Plan No. 183

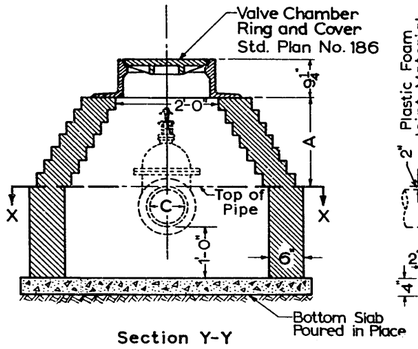

Section Y-Y

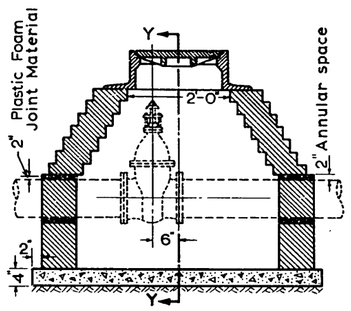

Section Z-Z

When C=8" A=21" not less
" C=12" A=29" " "

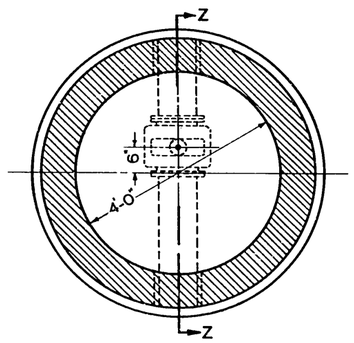

Section X-X

DO NOT SCALE

CITY OF SEATTLE
DEPARTMENT OF ENGINEERING

Type 183 Valve Chamber-
Masonry Construction

APPROVED BY THE BOARD OF PUBLIC WORKS
JANUARY 8, 1964 CHAIRMAN
ATTEST: SECRETARY

Standard Plan No. 184

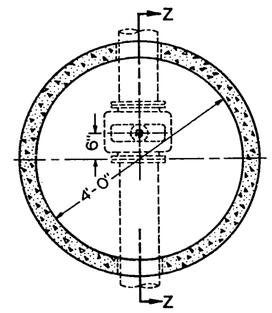

Section X-X

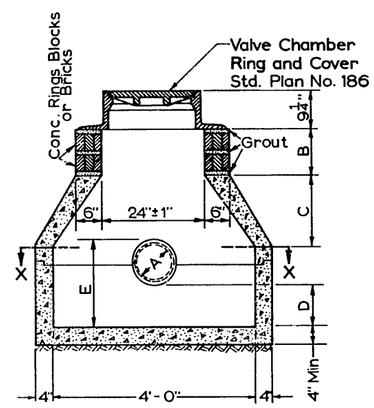

Section Y-Y

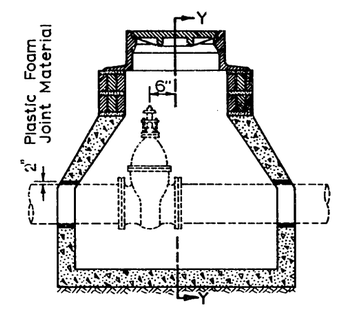

Section Z-Z

When "A"-Pipe Dia. is 4", 6", or 8"
"B"=3" Min.
"C"=1'-4" Max.
"D"=10" Min.
"E"=1'-9" Max.

When "A"-Pipe Dia. is 12"
"B"-11" Min.
"C"=2'-1" Max.
"D"=12" Min.
"E"=2'-3" Max.

DO NOT SCALE

CITY OF SEATTLE
DEPARTMENT OF ENGINEERING

Type 184 Valve Chamber-
Precast

APPROVED BY THE BOARD OF PUBLIC WORKS
JANUARY 8, 1964 CHAIRMAN
ATTEST: SECRETARY

Standard Plan No. 183

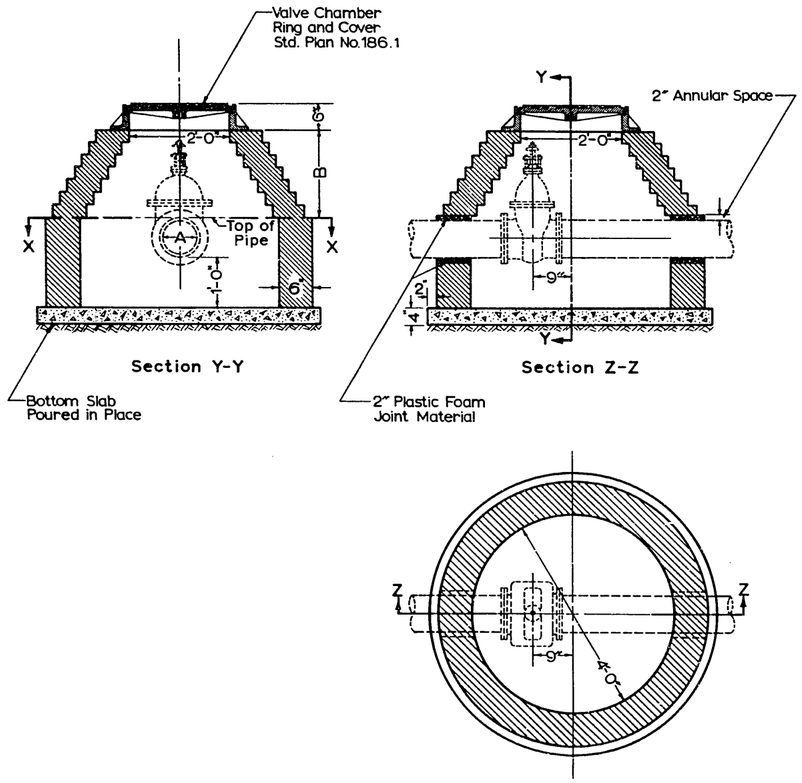

When "A" Pipe Dia. is 4", 6", or 8"
"B" = 2'-0" Min.

When "A"-Pipe Dia. is 12"
"B" = 2'-8" Min.

DO NOT SCALE

Revised 1-6-65	CITY OF SEATTLE DEPARTMENT OF ENGINEERING
	Type 183 Valve Chamber- Masonry Construction
	APPROVED BY THE BOARD OF PUBLIC WORKS JANUARY 8, 1964 CHAIRMAN ATTEST: SECRETARY

Standard Plan No. 184

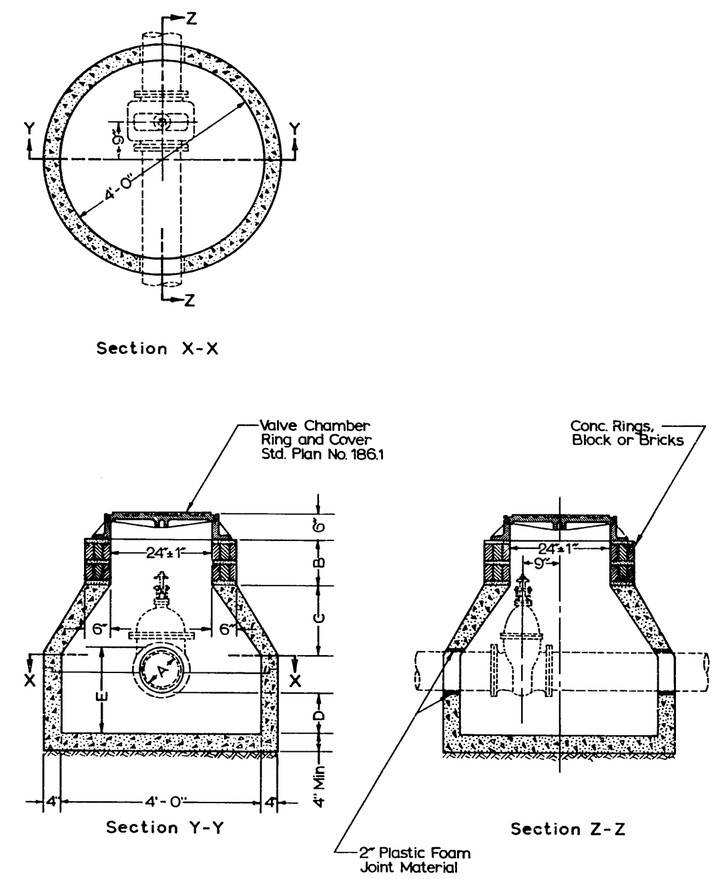

When "A"-Pipe Dia. is 4", 6", or 8"
"B" = 6" Min.
"C" = 1'-4" Max.
"D" = 10" Min.
"E" = 1'-9" Max.

When "A"-Pipe Dia. is 12"
"B" = 1'-2" Min.
"C" = 2'-1" Max.
"D" = 12" Min.
"E" = 2'-3" Max.

DO NOT SCALE

Revised 1-6-65	CITY OF SEATTLE DEPARTMENT OF ENGINEERING
	Type 184 Valve Chamber- Precast
	APPROVED BY THE BOARD OF PUBLIC WORKS JANUARY 8, 1964 CHAIRMAN ATTEST: SECRETARY

Standard Plan No. 185

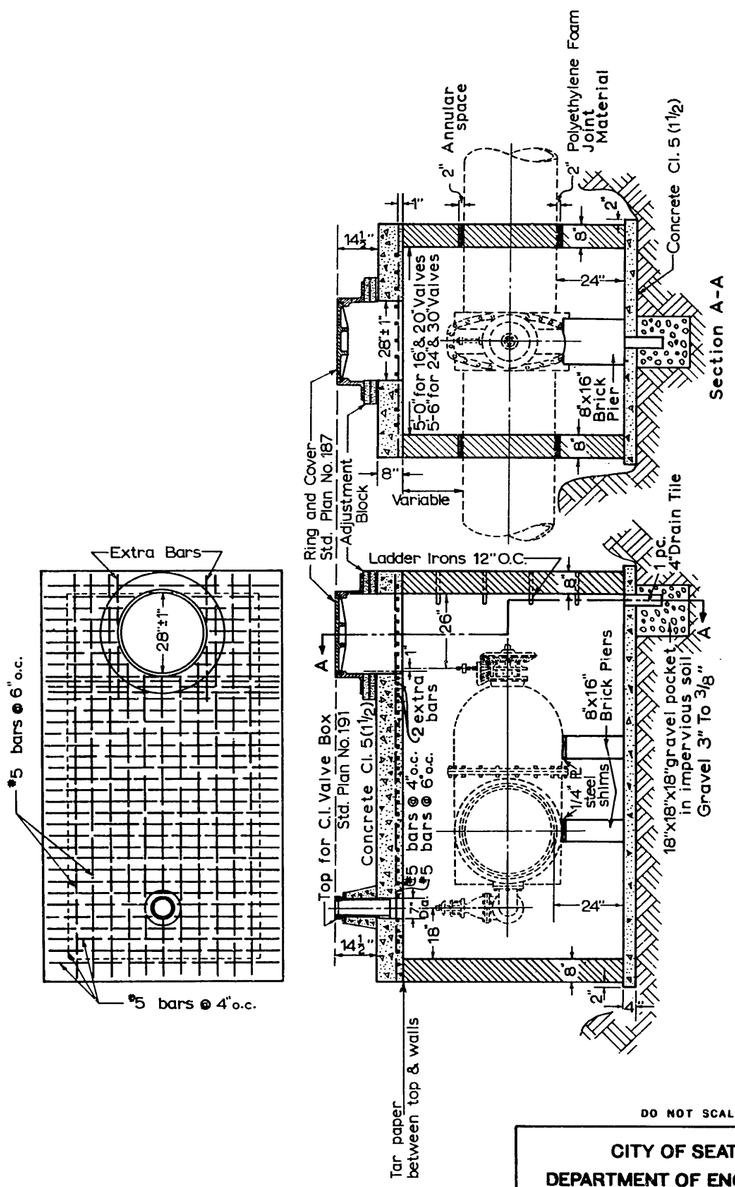

DO NOT SCALE

CITY OF SEATTLE
DEPARTMENT OF ENGINEERING

Type 185 Valve Chamber-Large

APPROVED BY THE BOARD OF PUBLIC WORKS
JANUARY 8, 1964 CHAIRMAN
ATTEST: SECRETARY

Standard Plan No. 186

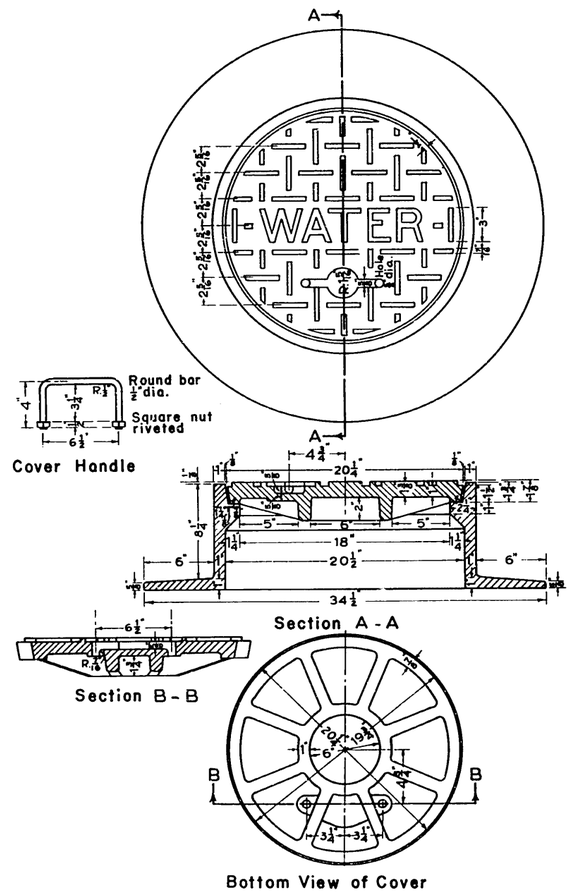

Ring and Cover shall be tested for accuracy of fit and shall be marked in sets for delivery. See Std. Specs. Sec. 113.

All Castings to have a bituminous coating according to Std. Specs. Sec. 63.208.

DO NOT SCALE

CITY OF SEATTLE
DEPARTMENT OF ENGINEERING

Type 186 - 18inch Valve Chamber Ring and Cover

APPROVED BY THE BOARD OF PUBLIC WORKS
JANUARY 8, 1964 CHAIRMAN
ATTEST: SECRETARY

Standard Plan No. 185

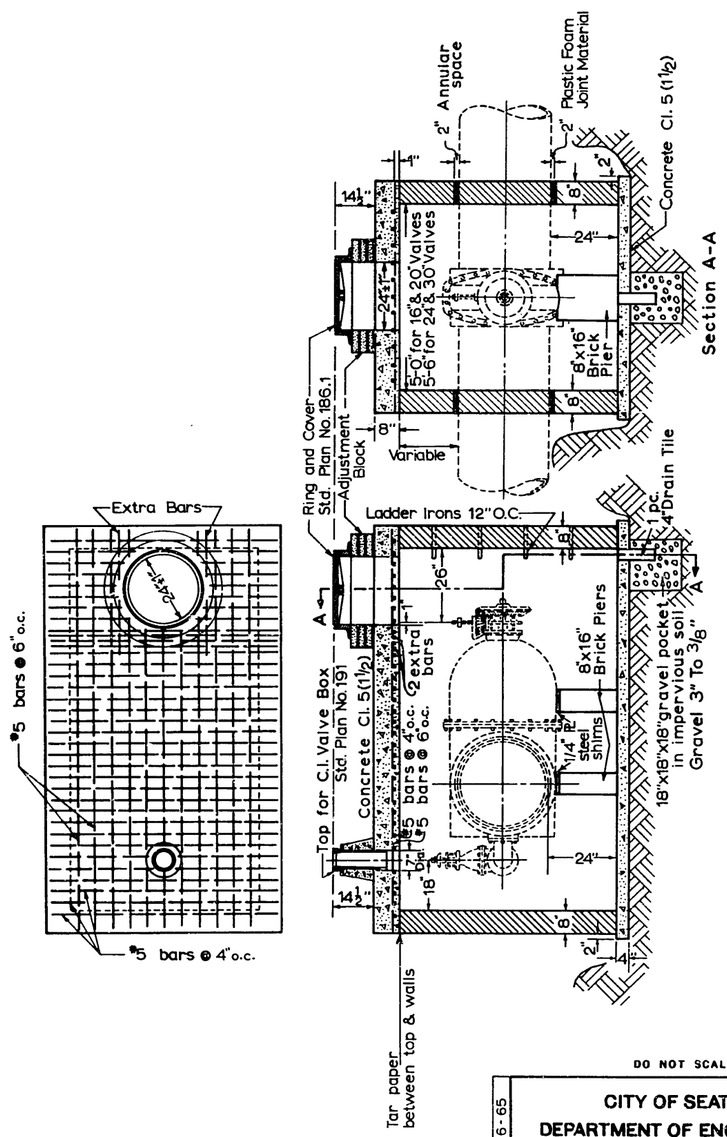

DO NOT SCALE

Revised 1-6-65	CITY OF SEATTLE DEPARTMENT OF ENGINEERING
	Type 185 Valve Chamber-Large
	APPROVED BY THE BOARD OF PUBLIC WORKS JANUARY 6, 1964 CHAIRMAN ATTEST: SECRETARY

Standard Plan No. 186

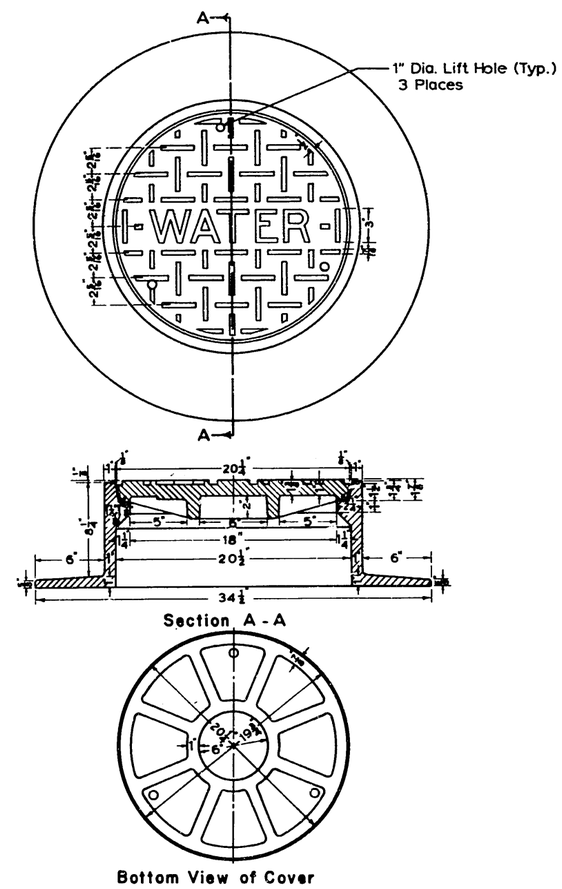

Ring and Cover shall be tested for accuracy of fit and shall be marked in sets for delivery. See Std. Specs. Sec. 113.

All Castings to have a bituminous coating according to Std. Specs. Sec. 63-2.08.

DO NOT SCALE

Revised 1-6-65	CITY OF SEATTLE DEPARTMENT OF ENGINEERING
	Type 186 - 18inch Valve Chamber Ring and Cover
	APPROVED BY THE BOARD OF PUBLIC WORKS JANUARY 6, 1964 CHAIRMAN ATTEST: SECRETARY

Standard Plan No. 186.1

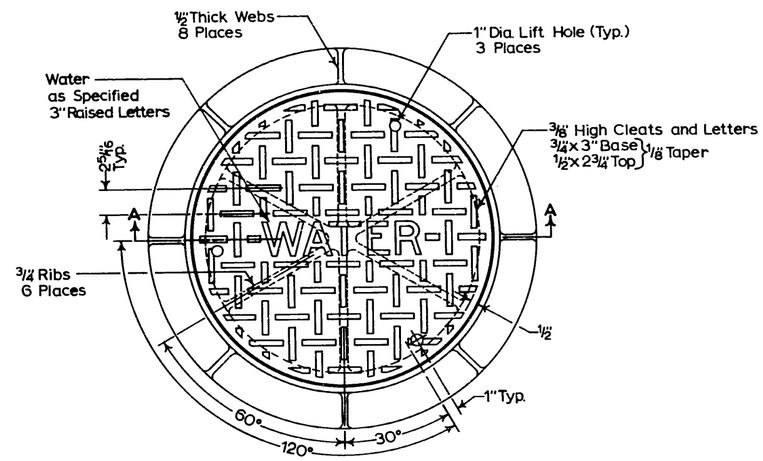

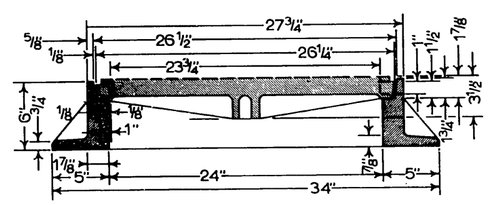

Section A-A

Ring and Cover shall be tested for accuracy of fit and shall be marked in sets for delivery. See Std. Specs. Sec. 113.

All Castings to have a bituminous coating according to Std. Specs. Sec. 63-2.08.

DO NOT SCALE

CITY OF SEATTLE
DEPARTMENT OF ENGINEERING

Type 186.1-24 Inch Valve Chamber Ring and Cover

APPROVED BY THE BOARD OF PUBLIC WORKS
Jan. 21, 1955 Gill Moran CHAIRMAN
ATTEST: E. Schlenz SECRETARY

Standard Plan No. 187

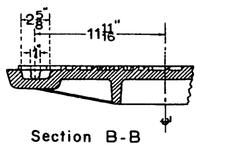

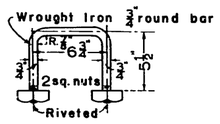

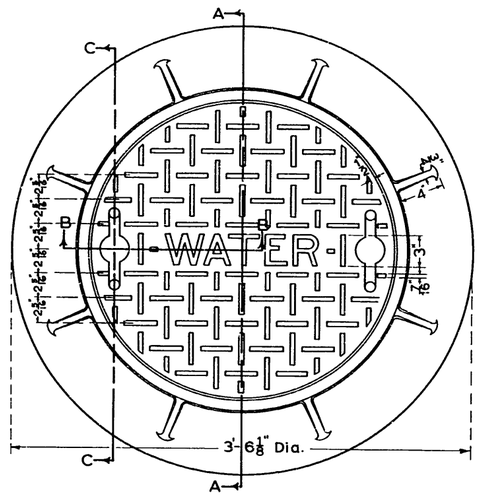

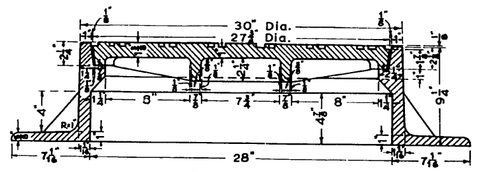

Section A - A

Bottom View

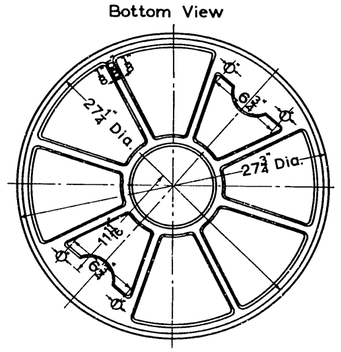

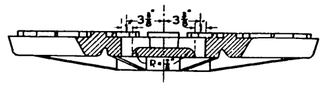

Section C - C

Ring and Cover shall be tested for accuracy of fit and shall be marked in sets for delivery. See Std. Specs. Sec. 113.

All Castings to have a bituminous coating according to Std. Specs. Sec. 63.208.

DO NOT SCALE

CITY OF SEATTLE
DEPARTMENT OF ENGINEERING

Type 187 – 25 1/2 inch Valve Chamber Ring and Cover

APPROVED BY THE BOARD OF PUBLIC WORKS
JANUARY 8, 1964 R.H. Morse CHAIRMAN
ATTEST: E. Benz SECRETARY

Standard Plan No. 187

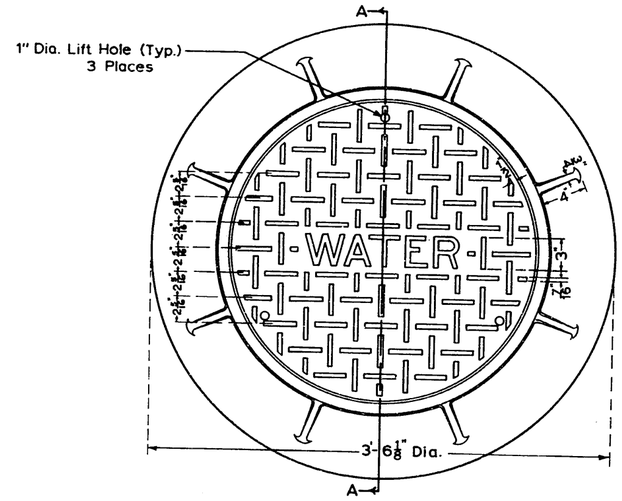

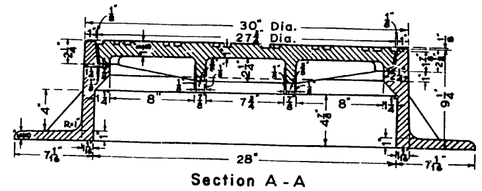

Section A - A

Bottom View

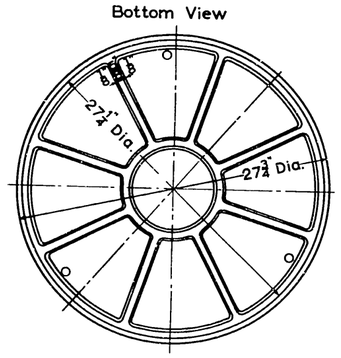

Ring and Cover shall be tested for accuracy of fit and shall be marked in sets for delivery. See Std. Specs. Sec. 113.

All Castings to have a bituminous coating according to Std. Specs. Sec. 63-2.08.

DO NOT SCALE

CITY OF SEATTLE
DEPARTMENT OF ENGINEERING

Type 187 – 25 1/2 inch Valve Chamber Ring and Cover

Revised 1-6-65

APPROVED BY THE BOARD OF PUBLIC WORKS
JANUARY 8, 1964 R.H. Morse CHAIRMAN
ATTEST: E. Benz SECRETARY

Standard Plan No. 187

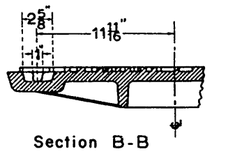

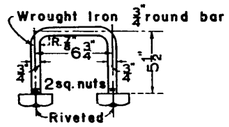

Handle

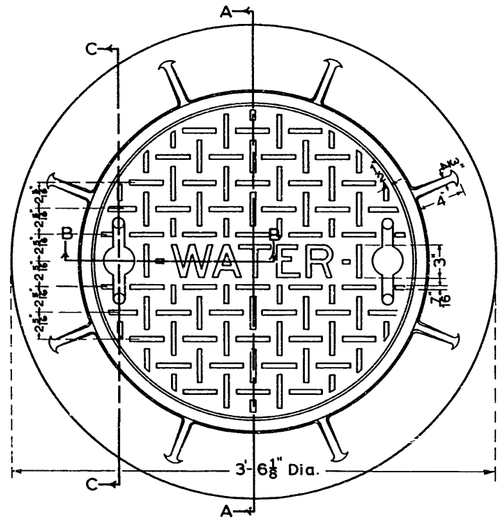

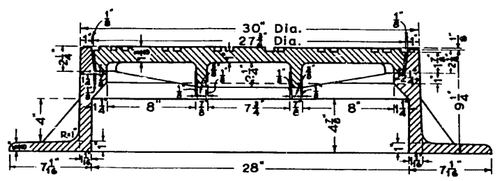

Section A - A

Bottom View

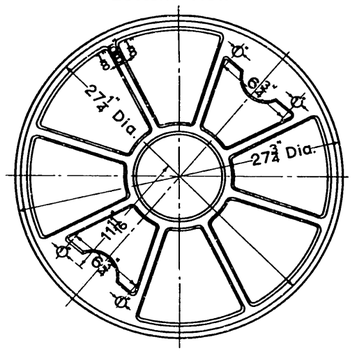

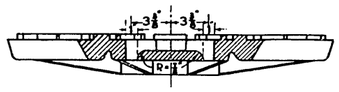

Section C - C

Ring and Cover shall be tested for accuracy of fit and shall be marked in sets for delivery. See Std. Specs. Sec. 113.

All Castings to have a bituminous coating according to Std. Specs. Sec. 63.208.

DO NOT SCALE

CITY OF SEATTLE
DEPARTMENT OF ENGINEERING

Type 187 – 25 1/2 inch Valve Chamber Ring and Cover

APPROVED BY THE BOARD OF PUBLIC WORKS
JANUARY 8, 1964 — CHAIRMAN
ATTEST: — SECRETARY

Standard Plan No. 188

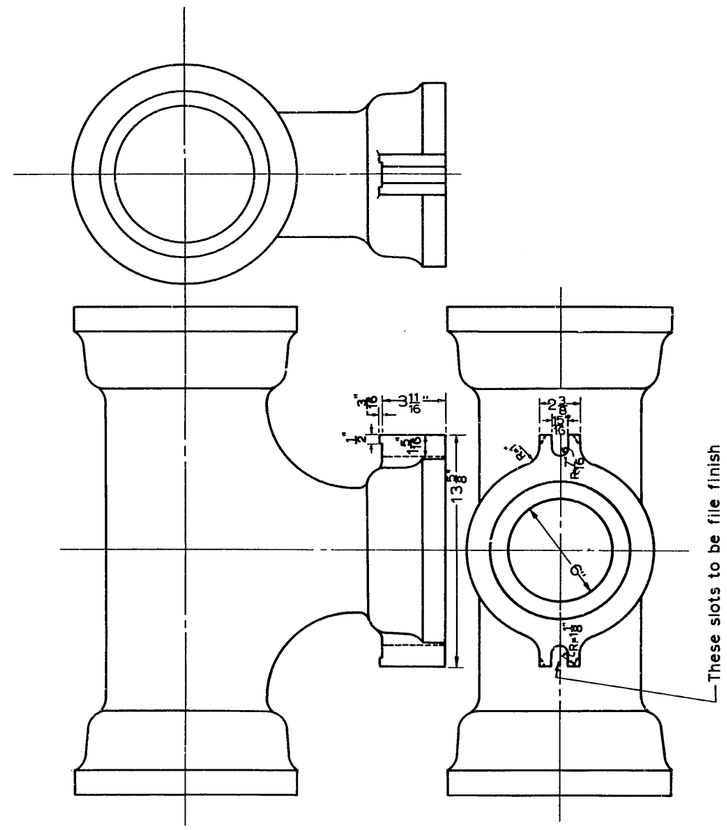

DO NOT SCALE

CITY OF SEATTLE
DEPARTMENT OF ENGINEERING

Hydrant Tee For Leaded Joints

APPROVED BY THE BOARD OF PUBLIC WORKS
JANUARY 8, 1964 — CHAIRMAN
ATTEST: — SECRETARY

Standard Plan No. 188.1

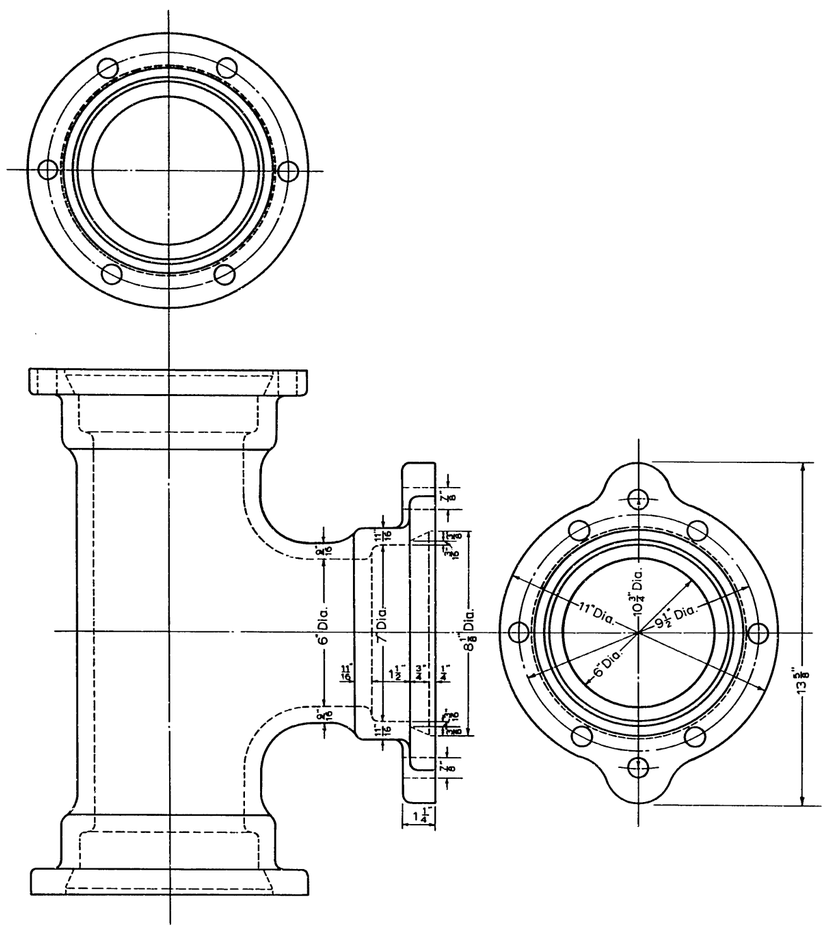

DO NOT SCALE

CITY OF SEATTLE
DEPARTMENT OF ENGINEERING

Mechanical Joint
Hydrant Tee

APPROVED BY THE BOARD OF PUBLIC WORKS
JANUARY 8, 1964 CHAIRMAN
ATTEST: SECRETARY

Standard Plan No. 189

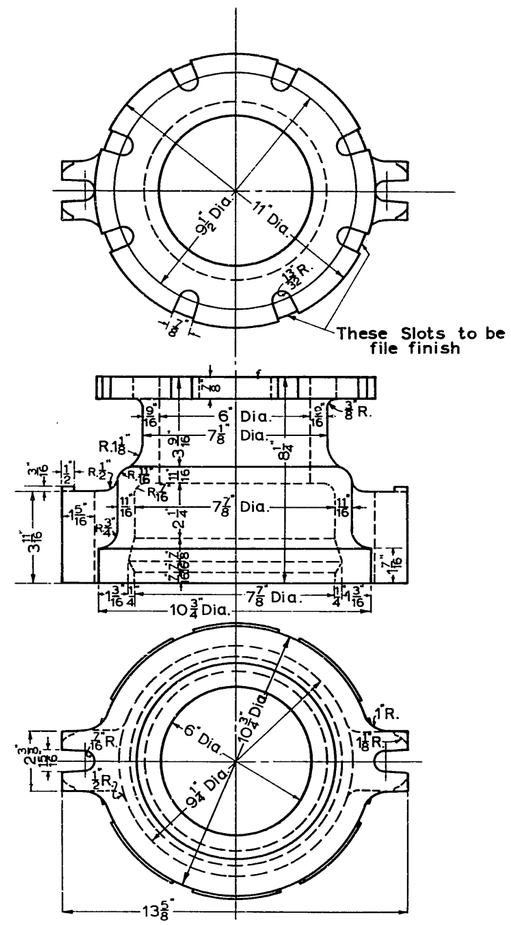

Approximate Weight 70 lbs.

DO NOT SCALE

CITY OF SEATTLE
DEPARTMENT OF ENGINEERING

6 Inch Hub and Flange
Shackled

APPROVED BY THE BOARD OF PUBLIC WORKS
JANUARY 8, 1964 CHAIRMAN
ATTEST: SECRETARY

Standard Plan No. 190

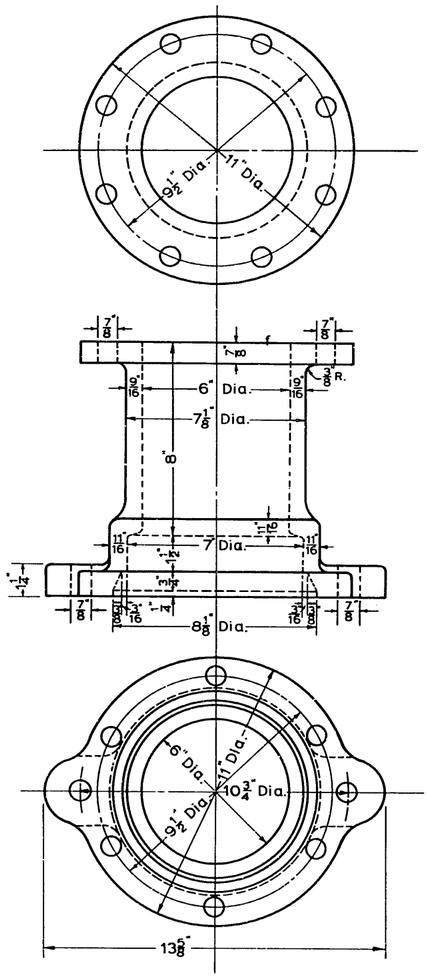

DO NOT SCALE

CITY OF SEATTLE
DEPARTMENT OF ENGINEERING

6 Inch Hub and Flange Mechanical Joint

APPROVED BY THE BOARD OF PUBLIC WORKS
JANUARY 8, 1964 — CHAIRMAN
ATTEST: — SECRETARY

Standard Plan No. 191

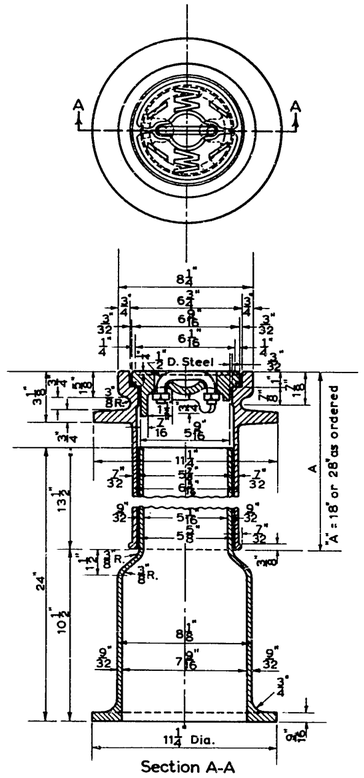

Section A-A

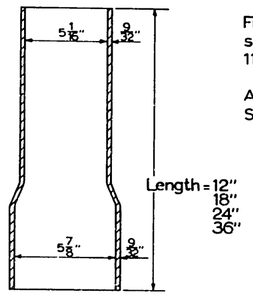

Extension Piece

Frame and Cover shall be tested for accuracy of fit and shall be marked in sets for delivery. See Std. Specs. Sec. 113.

All Castings to have a bituminous coating according to Std. Specs. Sec. 63.208.

DO NOT SCALE

CITY OF SEATTLE
DEPARTMENT OF ENGINEERING

Cast Iron Valve Box

APPROVED BY THE BOARD OF PUBLIC WORKS
JANUARY 8, 1964 — CHAIRMAN
ATTEST: — SECRETARY

Standard Plan No. 191

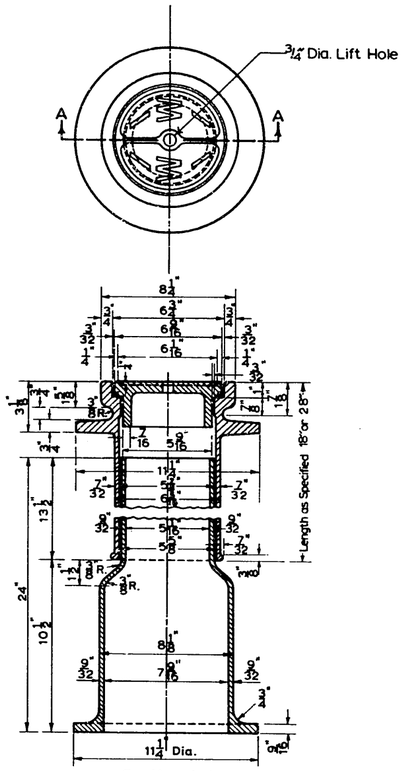

Section A-A

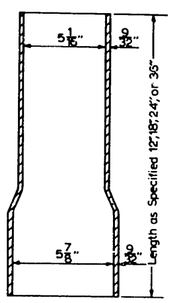

Extension Piece

Frame and Cover shall be tested for accuracy of fit and shall be marked in sets for delivery. See Std. Specs. Sec. 113.

All Castings to have a bituminous coating according to Std. Specs. Sec. 63.208.

DO NOT SCALE

Revised 1-6-65	CITY OF SEATTLE DEPARTMENT OF ENGINEERING
	Cast Iron Valve Box
	APPROVED BY THE BOARD OF PUBLIC WORKS JANUARY 8, 1964 CHAIRMAN ATTEST: SECRETARY

Standard Plan No. 191

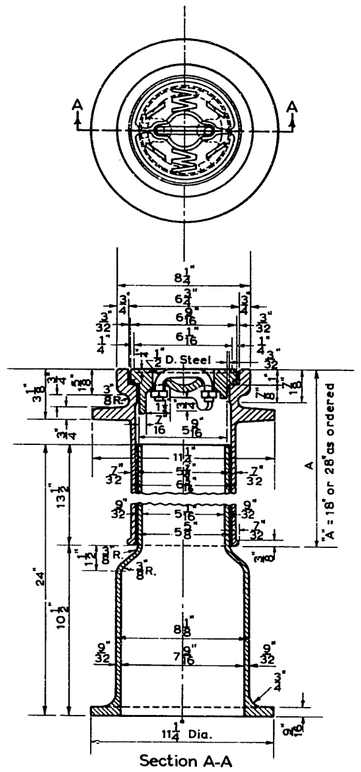

Section A-A

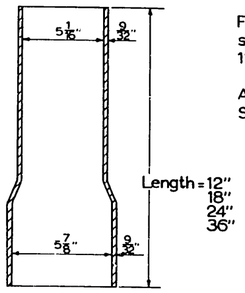

Extension Piece

Frame and Cover shall be tested for accuracy of fit and shall be marked in sets for delivery. See Std. Specs. Sec. 113.

All Castings to have a bituminous coating according to Std. Specs. Sec. 63.208.

DO NOT SCALE

CITY OF SEATTLE DEPARTMENT OF ENGINEERING
Cast Iron Valve Box
APPROVED BY THE BOARD OF PUBLIC WORKS JANUARY 8, 1964 CHAIRMAN ATTEST: SECRETARY

Standard Plan No. 192

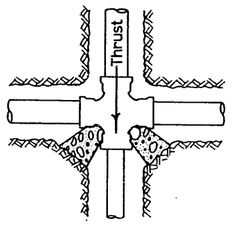

Unbalanced Cross

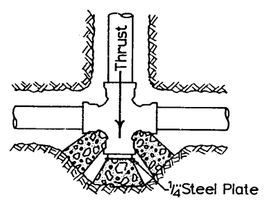

Cross with Shackled Plug

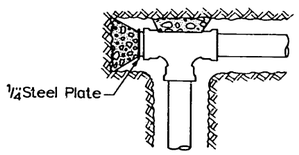

Plugged Tee

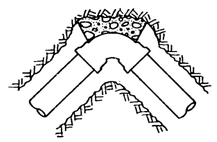

Horizontal Bend

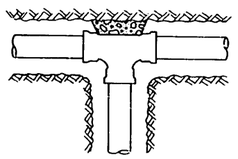

Tee

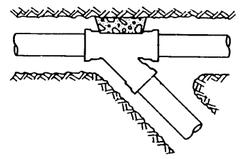

Y Branch

All Blocking to be Concrete Cl. 5 ($1\frac{1}{2}$)

Location and Size of Blocking as determined by the City Engineer.

All Blocking to bear against undisturbed native ground.

DO NOT SCALE

CITY OF SEATTLE
DEPARTMENT OF ENGINEERING

Concrete Blocking - General

APPROVED BY THE BOARD OF PUBLIC WORKS
JANUARY 8, 1964 CHAIRMAN
ATTEST: SECRETARY

Standard Plan No. 193

Type "A" Blocking
for 11¼°-22½°-30° Vertical Bends

Pipe Size Nom. Diameter-Inches	Test Pressure psi	V.B. Vertical Bend Degrees	No. of cu. ft. of Conc. Blocking	S Side of Cube feet	d Diameter of Shackle Rods (2) inches	L Depth of Rods in Concrete feet
4"	300	11¼	8	2	3/4"	1.5
		22½	11	2.2		2.0
		30	17	2.6		
6"	300	11¼	11	2.2	3/4"	2.0
		22½	25	2.9		
		30	41	3.5		
8"	300	11¼	16	2.5	3/4"	2.0
		22½	47	3.6		
		30	70	4.1	3/4"	2.5
12"	250	11¼	32	3.2	3/4"	2.0
		22½	88	4.5	7/8"	3.0
		30	132	5.1		
16"	225	11¼	70	4.1	7/8"	3.0
		22½	184	5.7	1 1/8"	4.0
		30	275	6.5	1¼"	
20"	200	11¼	91	4.5	7/8"	3.0
		22½	225	6.1	1¼"	4.0
		30	330	6.9	1 3/8"	4.5
24"	200	11¼	128	5.0	1"	3.5
		22½	320	6.8	1 3/8"	4.5
		30	480	7.9	1 7/8"	5.5

Type "B" Blocking
for 45° Vertical Bends

Pipe Size Nom. Diameter-Inches	Test Pressure psi	V.B. Vertical Bend Degrees	No. of cu. ft. of Conc. Blocking	S Side of Cube feet	d Diameter of Shackle Rods (4) inches	L Depth of Rods in Concrete feet
4"	300	45	30	3.1	3/4"	2.0
6"			68	4.1		
8"			123	5.0		
12"	250		232	6.1	3/4"	2.5
16"	225		478	7.8	1 1/8"	4.0
20"	200		560	8.2	1¼"	
24"			820	9.4	1 3/8"	4.5

Type A Blocking
for 11¼°-22½°-30° Vertical Bends

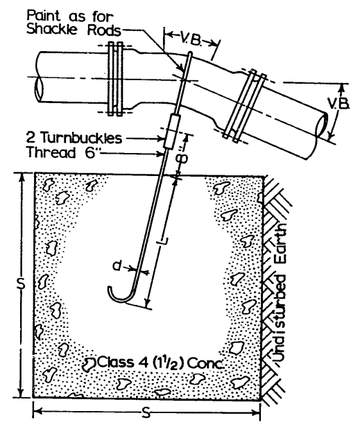

Type B Blocking
for 45° Vertical Bends

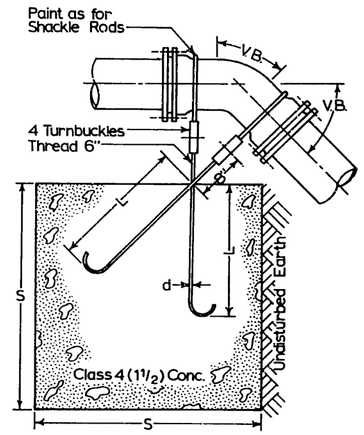

DO NOT SCALE

CITY OF SEATTLE
DEPARTMENT OF ENGINEERING

Blocking for Convex Vertical Bends

APPROVED BY THE BOARD OF PUBLIC WORKS
JANUARY 8, 1964 CHAIRMAN
ATTEST: SECRETARY

Standard Plan No. 194

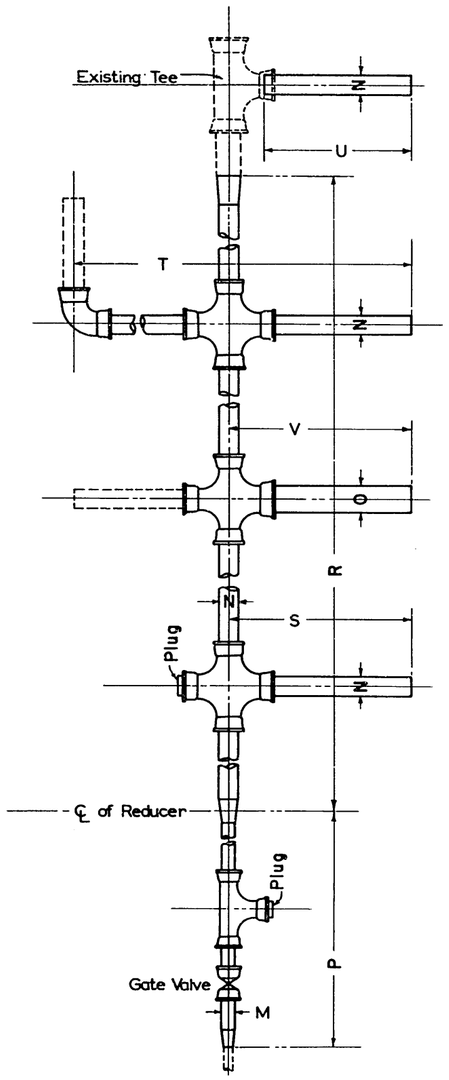

Payment will be made for
P- linear feet of pipe of diameter "M"
R,-S,-T, & U- linear feet of pipe of diameter "N"
V- linear feet of pipe of diameter "O"
See Specifications for Details and for Alternate Method.

DO NOT SCALE

CITY OF SEATTLE
DEPARTMENT OF ENGINEERING

Watermain Payment Diagram

APPROVED BY THE BOARD OF PUBLIC WORKS
JANUARY 8, 1964 CHAIRMAN
ATTEST: SECRETARY

Standard Plan No. 195

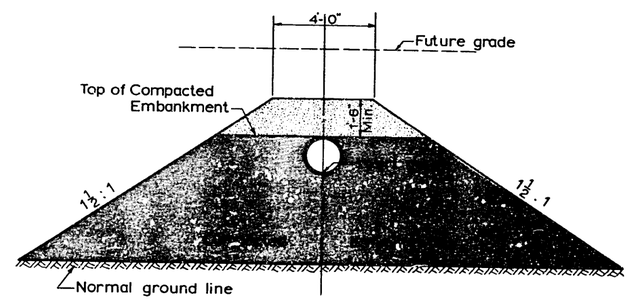

Note:
Normal ground line and depth of compacted embankment shall be determined by the City Engineer.

Watermains Constructed in Fill

DO NOT SCALE

CITY OF SEATTLE
DEPARTMENT OF ENGINEERING

Watermain Construction Detail

APPROVED BY THE BOARD OF PUBLIC WORKS
JANUARY 8, 1964 CHAIRMAN
ATTEST: SECRETARY

Standard Plan No. 195

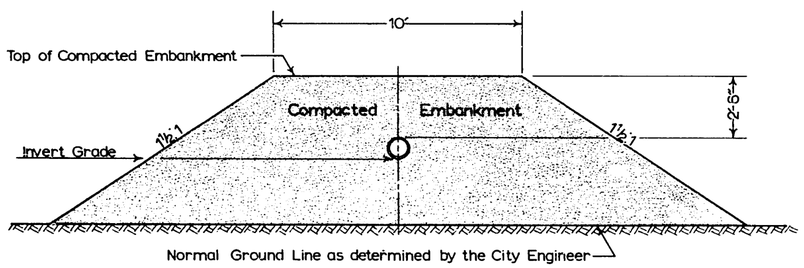

Watermains Constructed in Fill

DO NOT SCALE

Revised 1-6-65	CITY OF SEATTLE DEPARTMENT OF ENGINEERING
	Watermain Construction Detail
	APPROVED BY THE BOARD OF PUBLIC WORKS JANUARY 8, 1964 CHAIRMAN ATTEST: SECRETARY

Standard Plan No. 195

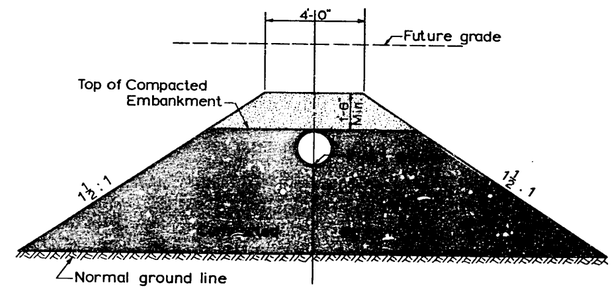

Note:
Normal ground line and depth of compacted embankment shall be determined by the City Engineer.

Watermains Constructed in Fill

DO NOT SCALE

CITY OF SEATTLE
DEPARTMENT OF ENGINEERING

Watermain
Construction Detail

APPROVED BY THE BOARD OF PUBLIC WORKS
JANUARY 8, 1964 CHAIRMAN
ATTEST: SECRETARY

Standard Plan No. 195

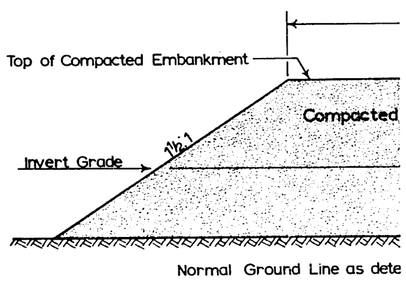

Watermains (

There are no
Standard Plans
#196, #197, #198
& #199
in the book
at the time of filming.

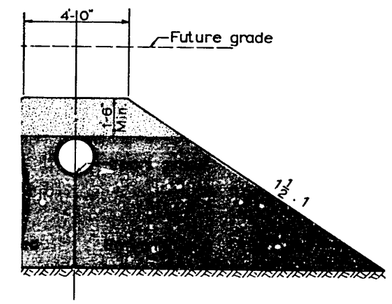

ound line and depth of
embankment shall be
l by the City Engineer.

, Constructed in Fill

DO NOT SCALE

CITY OF SEATTLE
DEPARTMENT OF ENGINEERING

Watermain
Construction Detail

APPROVED BY THE BOARD OF PUBLIC WORKS
JANUARY 8, 1964 CHAIRMAN
ATTEST: SECRETARY

Standard Plan No. 200

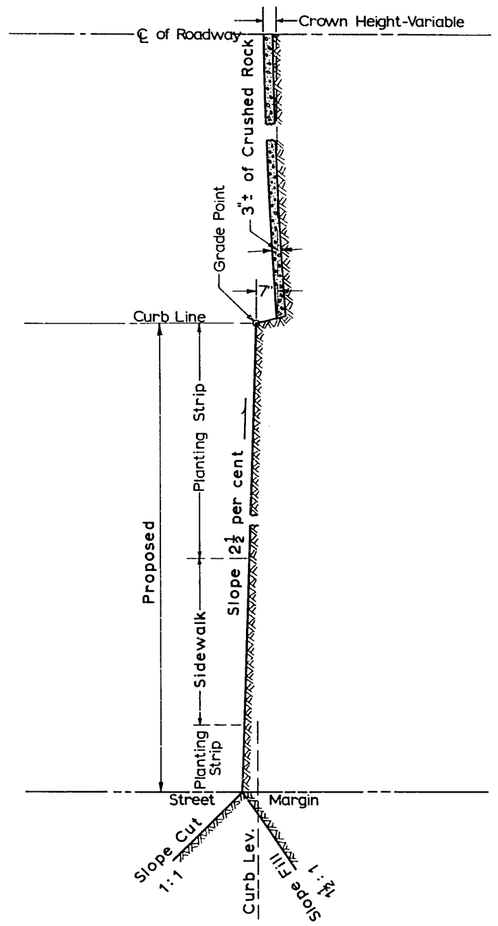

DO NOT SCALE

CITY OF SEATTLE
DEPARTMENT OF ENGINEERING

Half Section Grading

APPROVED BY THE BOARD OF PUBLIC WORKS
JANUARY 8, 1964 CHAIRMAN
ATTEST: SECRETARY

Standard Plan No. 201

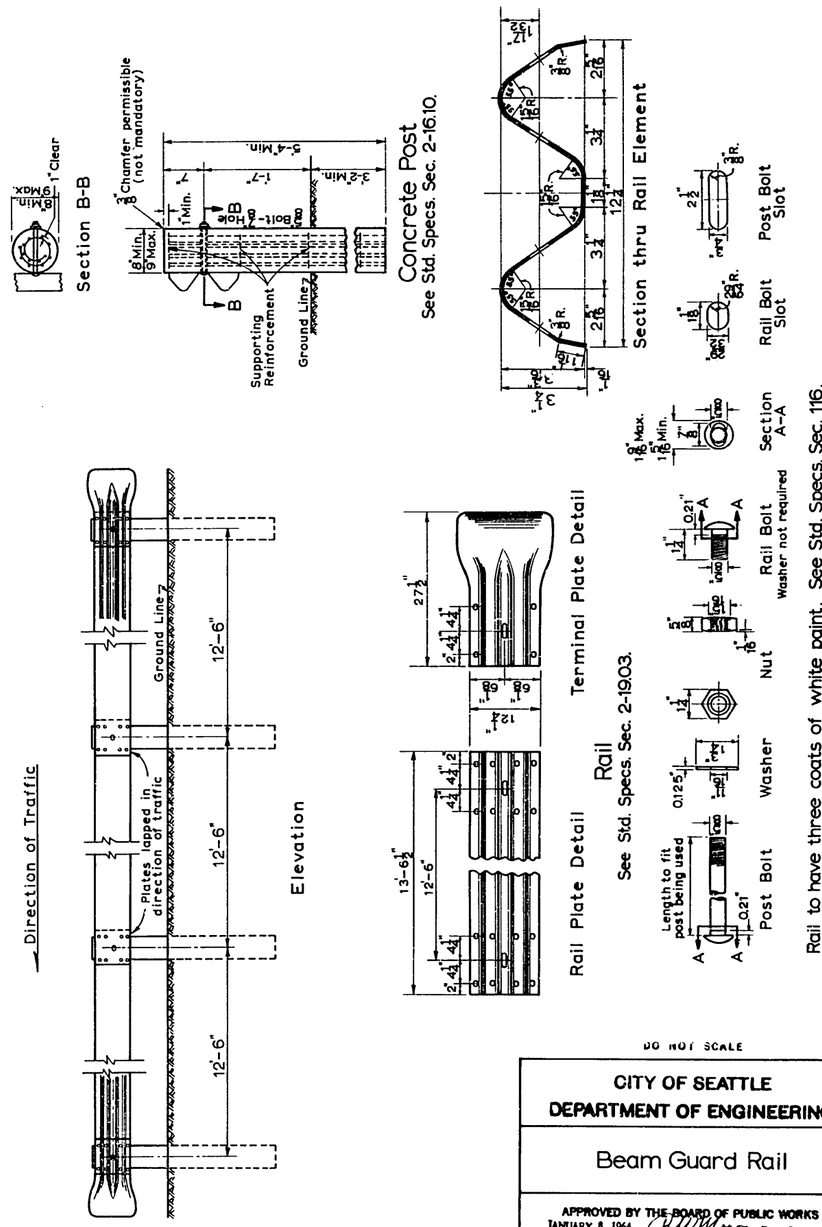

DO NOT SCALE

CITY OF SEATTLE
DEPARTMENT OF ENGINEERING

Beam Guard Rail

APPROVED BY THE BOARD OF PUBLIC WORKS
JANUARY 8, 1964 CHAIRMAN
ATTEST: SECRETARY

Standard Plan No. 202

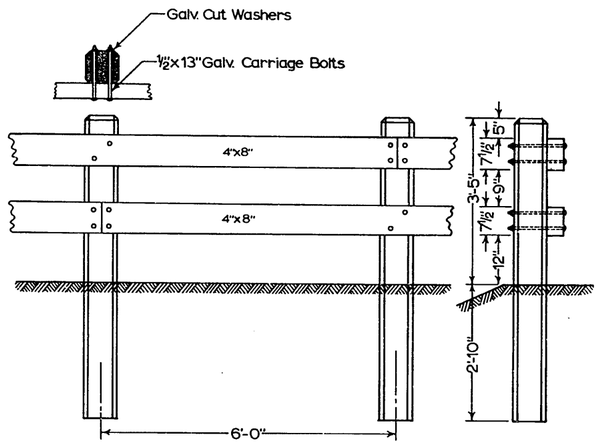

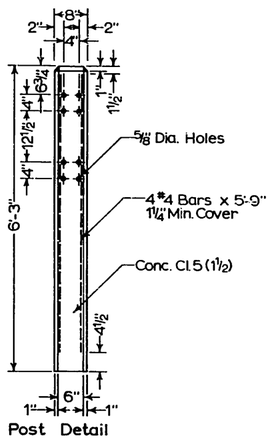

Post Detail

Lumber-Construction Grade-S4S, See Std. Specs. Sec. 114

Rails to have three coats of white paint. See Std. Specs. Sec. 116

DO NOT SCALE

CITY OF SEATTLE
DEPARTMENT OF ENGINEERING

Concrete Post Fence

APPROVED BY THE BOARD OF PUBLIC WORKS
JANUARY 8, 1964 CHAIRMAN
ATTEST: SECRETARY

Standard Plan No. 203

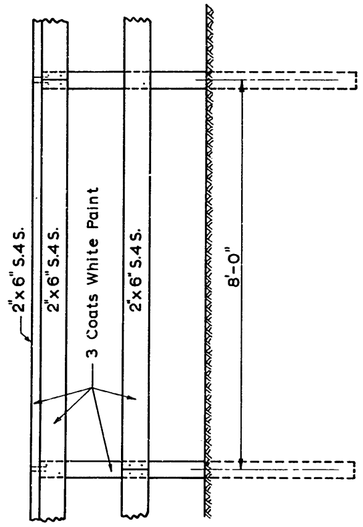

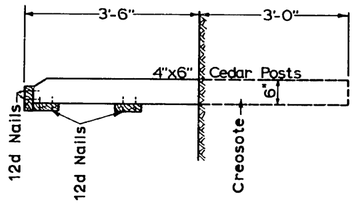

Lumber-Construction Grade - S4S. See Std. Specs. Sec. 114.

All surfaces to have three coats of white paint. See Std. Specs. Sec. 116.

Creosote embedded portion of posts. See Std. Specs. Sec. 115.

DO NOT SCALE

CITY OF SEATTLE
DEPARTMENT OF ENGINEERING

Temporary Wood Fence

APPROVED BY THE BOARD OF PUBLIC WORKS
JANUARY 8, 1964 CHAIRMAN
ATTEST: SECRETARY

Standard Plan No. 204

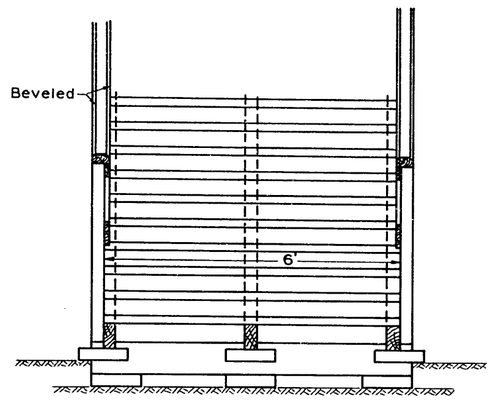

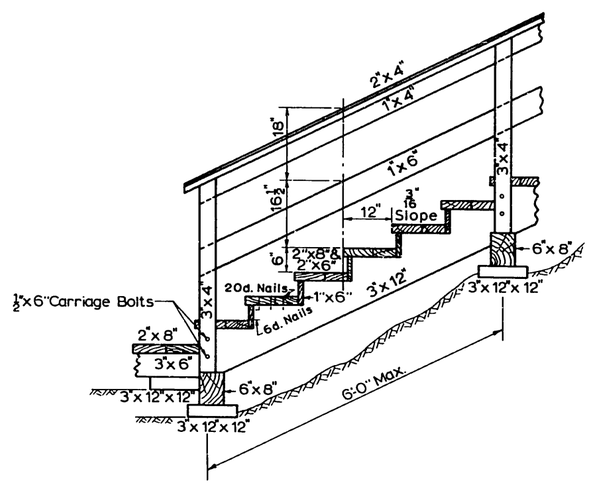

Lumber - Construction Grade - S4S. See Std. Specs. Sec. 114.

All surfaces to have three coats of white paint. See Std. Specs. Sec. 116.

DO NOT SCALE

CITY OF SEATTLE
DEPARTMENT OF ENGINEERING

Temporary Wood Stairway

APPROVED BY THE BOARD OF PUBLIC WORKS
JANUARY 8, 1964 CHAIRMAN
ATTEST: SECRETARY

There is no
Standard Plan
#205
in the book
at the time of filming.

Standard Plan No. 204

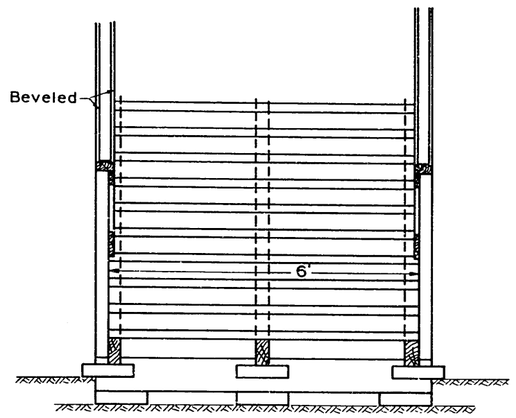

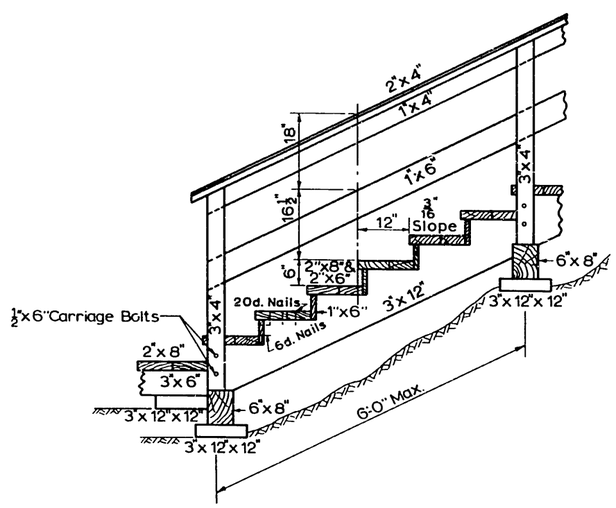

Lumber - Construction Grade - S4S. See Std. Specs. Sec. 114.

All surfaces to have three coats of white paint. See Std. Specs. Sec. 116.

DO NOT SCALE

CITY OF SEATTLE
DEPARTMENT OF ENGINEERING

Temporary Wood Stairway

APPROVED BY THE BOARD OF PUBLIC WORKS
JANUARY 8, 1964 CHAIRMAN
ATTEST: SECRETARY

Standard Plan No. 206

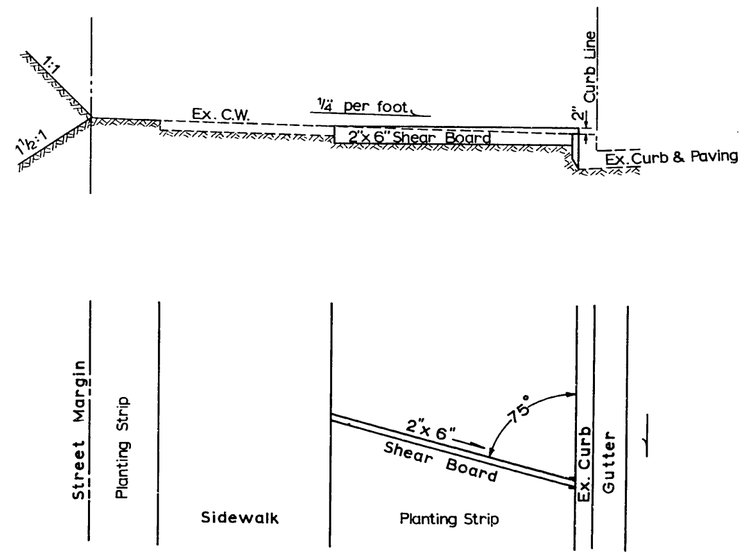

DO NOT SCALE

CITY OF SEATTLE
DEPARTMENT OF ENGINEERING

Shear Board Installation

APPROVED BY THE BOARD OF PUBLIC WORKS
JANUARY 8, 1964 CHAIRMAN
ATTEST: SECRETARY

Standard Plan No.207

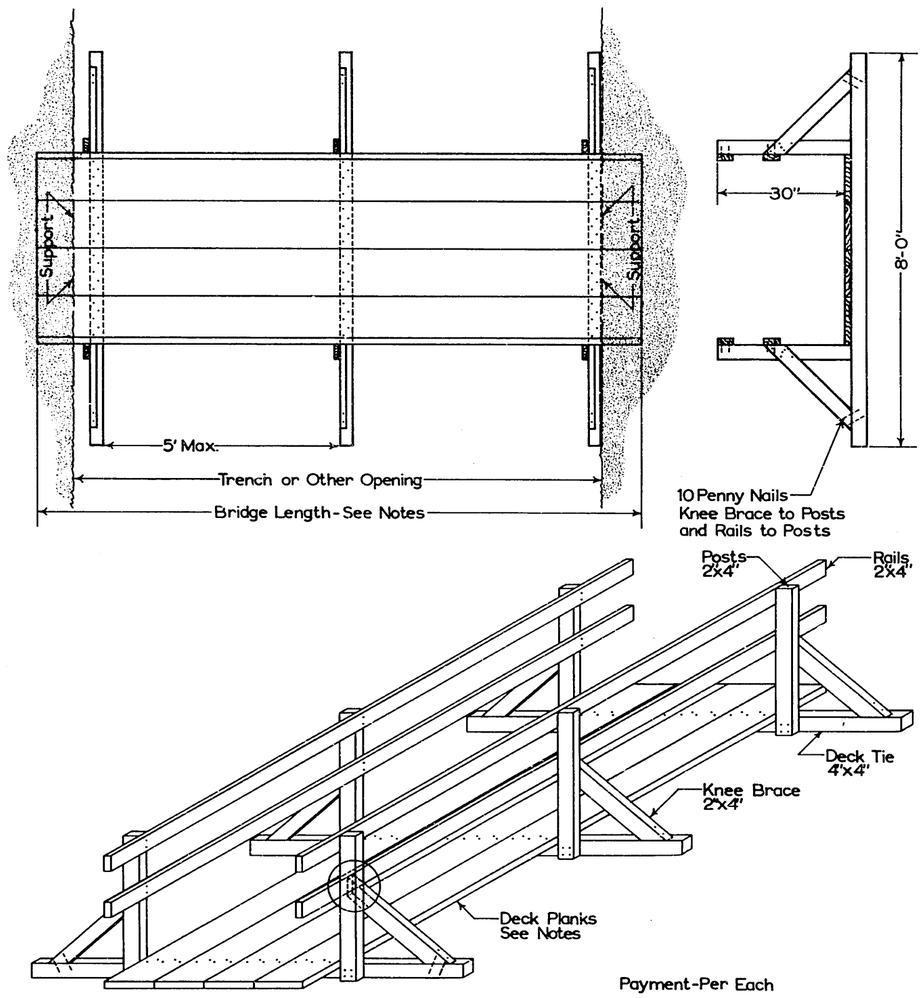

Payment-Per Each

Lumber - Construction Grade - S4S. See Std. Specs. Sec. 114.
Deck Tie, Knee Brace, Posts and Rails _____ S4S
Deck Planks _____ Rough

All surfaces to have three coats of white paint. See Std. Specs. Sec. 116.

Bridge Length	Plank Size	Nails to Deck Tie
8'-12'	2"x 12"	50d
13'-16'	3"x 12"	60d
17'-20'	4"x 12"	60d

DO NOT SCALE

CITY OF SEATTLE
DEPARTMENT OF ENGINEERING

Temporary Pedestrian Crossing

APPROVED BY THE BOARD OF PUBLIC WORKS
JANUARY 8, 1964 — CHAIRMAN
ATTEST: _____ SECRETARY

There is no Standard Plan #208 in the book at the time of filming.

Standard Plan No.209

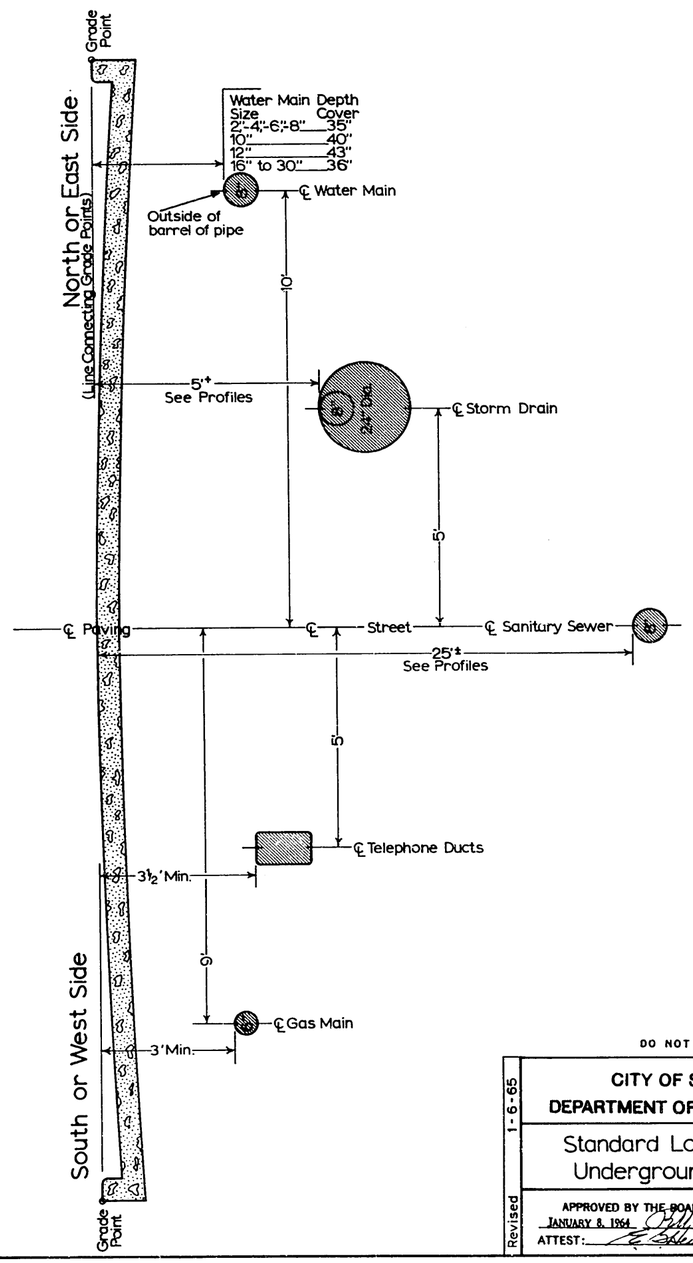

DO NOT SCALE

Revised 1-6-65	CITY OF SEATTLE DEPARTMENT OF ENGINEERING
	Standard Locations for Underground Utilities
	APPROVED BY THE BOARD OF PUBLIC WORKS JANUARY 8, 1964 CHAIRMAN ATTEST: SECRETARY

Standard Plan No.209

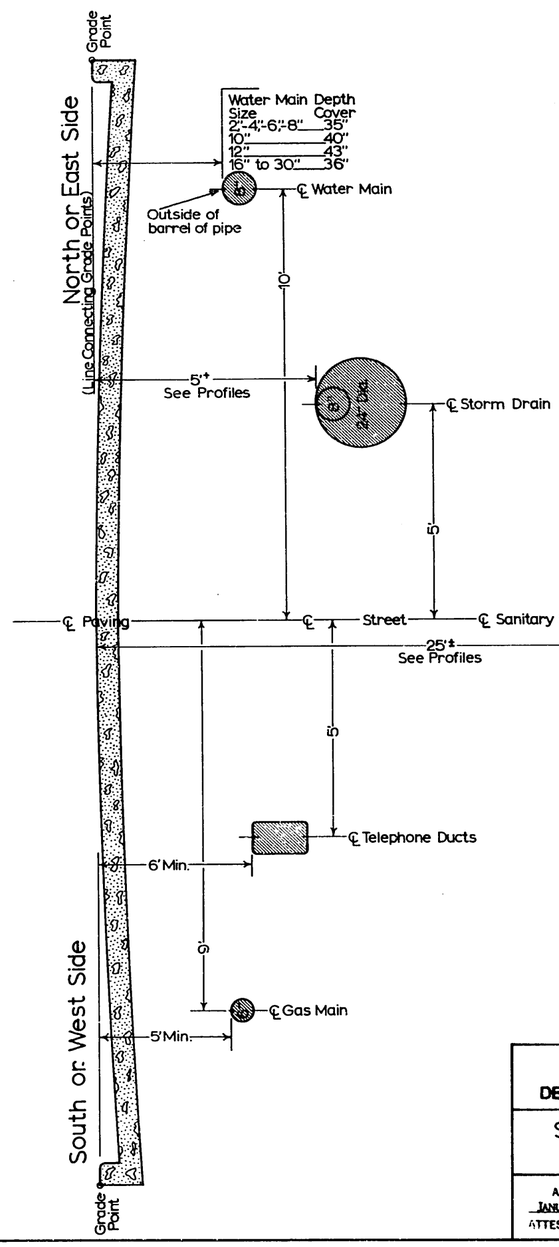

DO NOT SCALE

CITY OF SEATTLE
DEPARTMENT OF ENGINEERING

Standard Locations for Underground Utilities

APPROVED BY THE BOARD OF PUBLIC WORKS
JANUARY 8, 1964 CHAIRMAN
ATTEST: SECRETARY

Standard Plan No.210

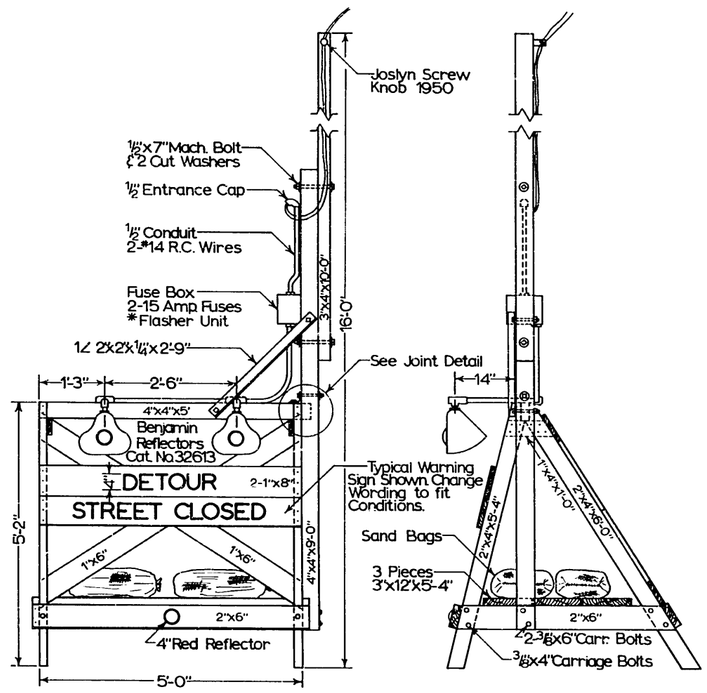

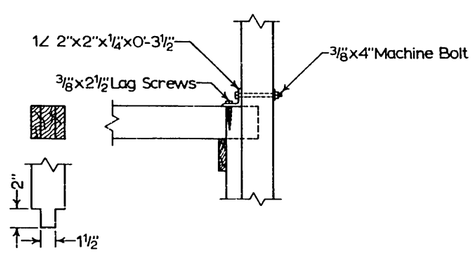

Joint Detail

*Flasher Unit-Twin Circuit or Alternating Type. Flashing Frequency 60 per-minute.

All surfaces to have three coats of white paint. See Std. Specs. Sec. 116.

Lumber-Construction Grade-S4S. See Std. Specs. Sec. 114.

DO NOT SCALE

CITY OF SEATTLE
DEPARTMENT OF ENGINEERING

Illuminated Barricade

APPROVED BY THE BOARD OF PUBLIC WORKS
JANUARY 8, 1964 CHAIRMAN
ATTEST: SECRETARY

Standard Plan No.211

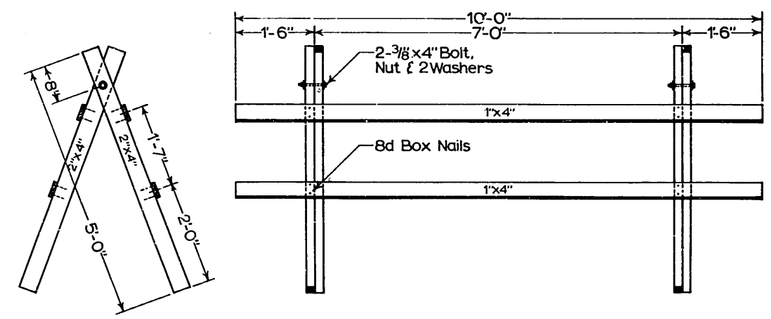

Lumber - Construction Grade - S4S. See Std. Specs. Sec. 114.

All surfaces to have three coats of yellow paint. See Std. Specs. Sec. 116.

Other barricades rented from commercial companies shall be regarded as standard when approved by the City Engineer.

DO NOT SCALE

CITY OF SEATTLE
DEPARTMENT OF ENGINEERING

Temporary Street Barricade

APPROVED BY THE BOARD OF PUBLIC WORKS
JANUARY 8, 1964 CHAIRMAN
ATTEST: SECRETARY

Standard Plan No.212

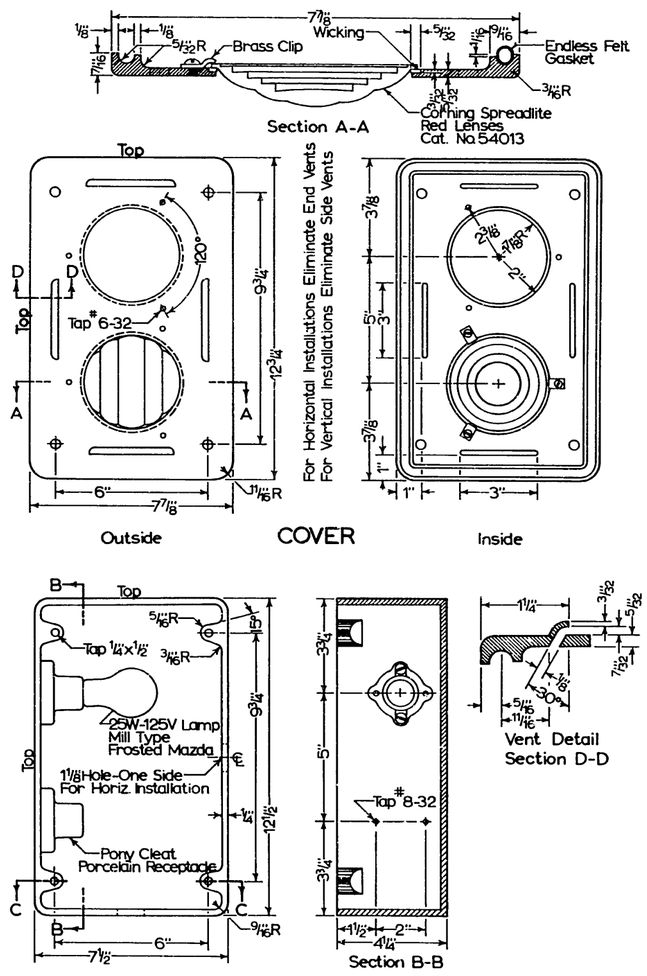

For Installation See Std. Plan No. 212.1.

DO NOT SCALE

CITY OF SEATTLE
DEPARTMENT OF ENGINEERING

Twin Danger Light

APPROVED BY THE BOARD OF PUBLIC WORKS
JANUARY 8, 1964 — CHAIRMAN
ATTEST: — SECRETARY

Standard Plan No.2121

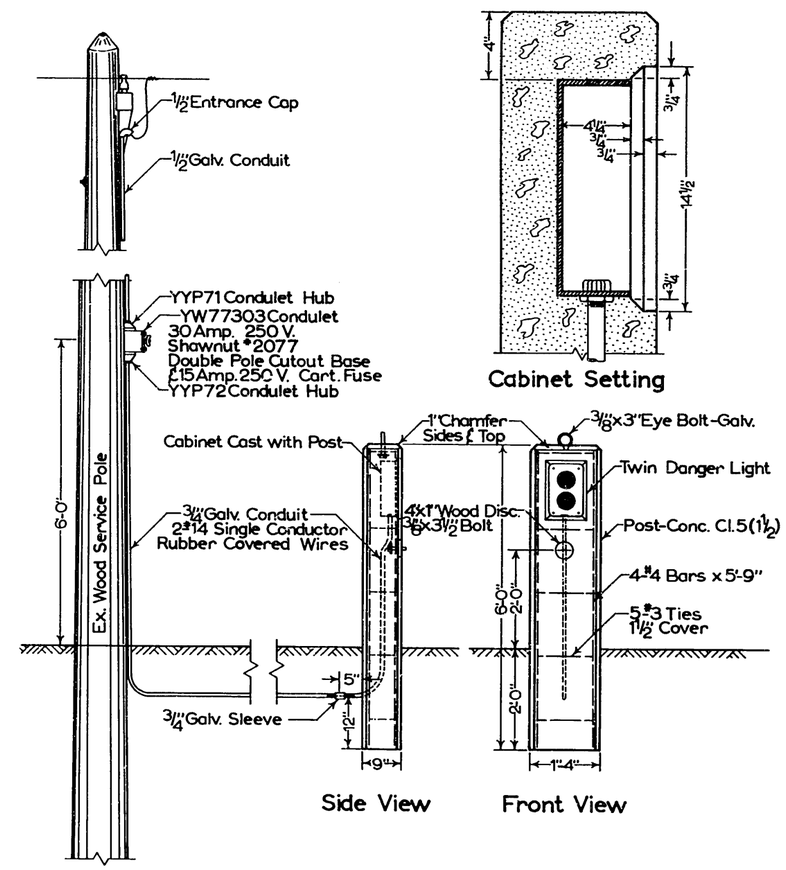

DO NOT SCALE

CITY OF SEATTLE
DEPARTMENT OF ENGINEERING

Twin Danger Light Installation

APPROVED BY THE BOARD OF PUBLIC WORKS
JANUARY 8, 1964 — CHAIRMAN
ATTEST: — SECRETARY

There is no

Standard Plan

#213

in the book

at the time of filming.

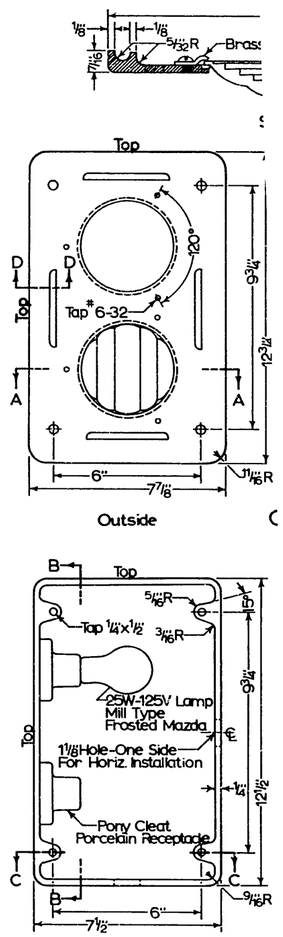

Material-Cast Iron

Standard Plan No.2121

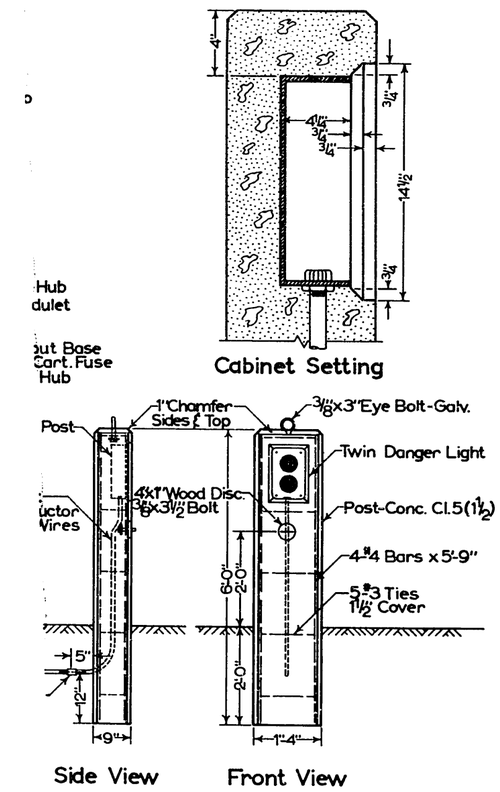

DO NOT SCALE

CITY OF SEATTLE
DEPARTMENT OF ENGINEERING

Twin Danger Light Installation

APPROVED BY THE BOARD OF PUBLIC WORKS
JANUARY 6, 1964 CHAIRMAN
ATTEST: SECRETARY

Standard Plan No.214

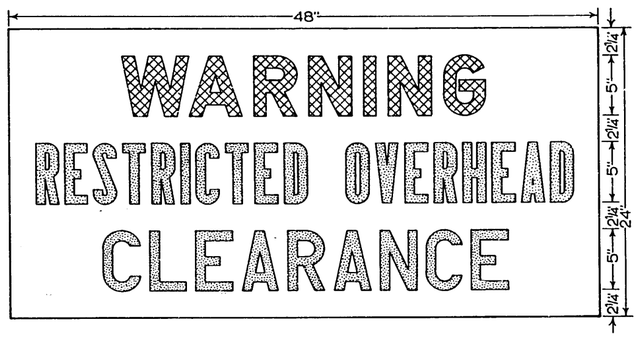

= Red

= White Background

= Black

Sign to be fully reflectorized.

DO NOT SCALE

CITY OF SEATTLE
DEPARTMENT OF ENGINEERING

Restricted Overhead Clearance Sign

APPROVED BY THE BOARD OF PUBLIC WORKS
JANUARY 8, 1964 CHAIRMAN
ATTEST: SECRETARY

Standard Plan No.215

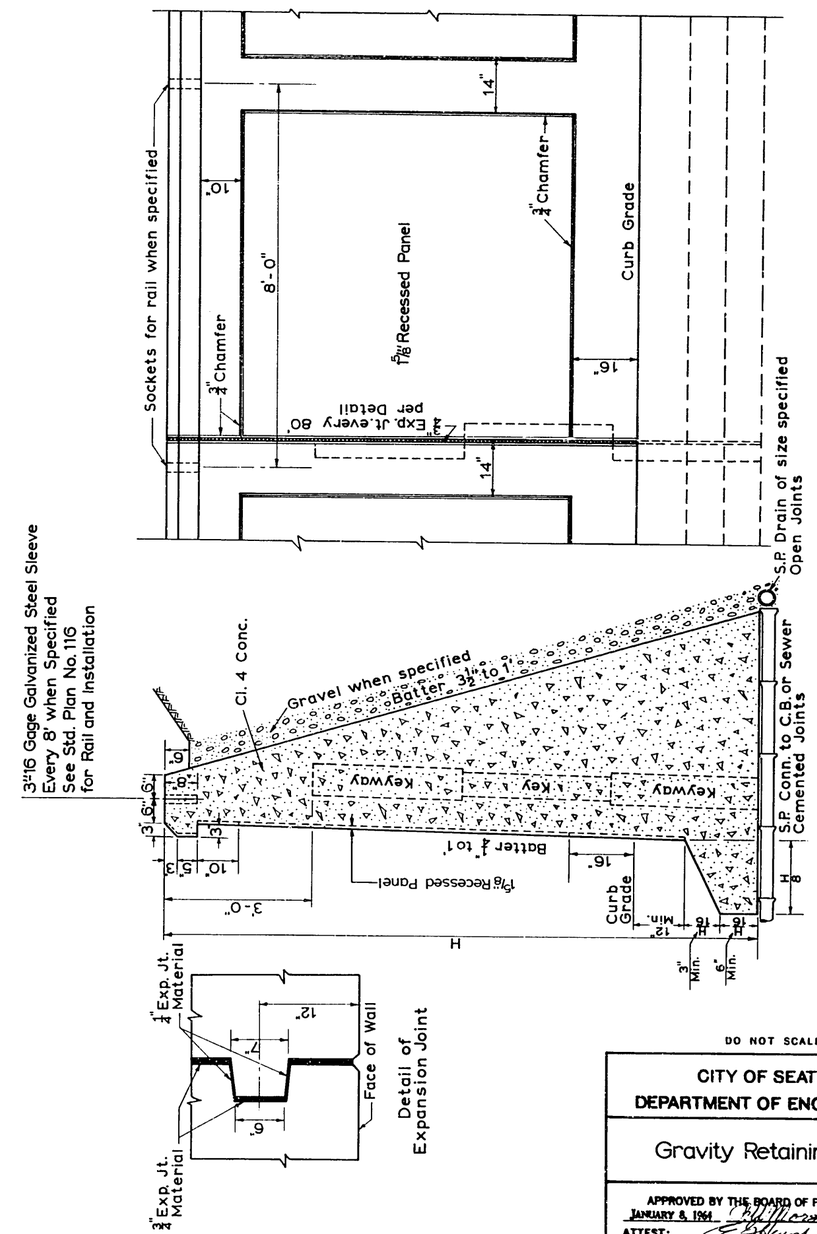

DO NOT SCALE

CITY OF SEATTLE
DEPARTMENT OF ENGINEERING

Gravity Retaining Wall

APPROVED BY THE BOARD OF PUBLIC WORKS
JANUARY 8, 1964 CHAIRMAN
ATTEST: SECRETARY

Standard Plan No.216

ITEM	TO BUILD	EXISTING
Concrete Pavement	6" Conc. Pav.	Ex. 6" Conc. Pav.
Concrete Sidewalk	C.W.	Ex. C.W.
Grading	To be Graded	Ex. Grading
Storm Drain	8" S.D.	Ex. 8" S.D.
Sanitary Sewer	8" San. S.	Ex. 8" San. S.
Side Sewer	6" S.S.	Ex. 6" S.S.
Manhole	M.H.	
Catch Basin	C.B.	
Sand Box	S.Bx.	
Inlet	Inl.	
Culvert	12" Culv.	Ex. 12" Culv.
Watermain	8" C.I.P. Cl.150	Ex. 8" C.I.P.
Hydrant	8"x8"x6" T & 6" Hyd.	
Gate Valve	8" G.V. & V.Ch.	
Bend	8" 11¼° Bend	
Cross	8"x8"x8"x8" Cr.	
Tee	8"x8"x8" T	
Reducer	8" to 4" Red.	
Air Valve	A.V.	
Gas Main		Gas
Telephone Duct		Tel.
Electrical Duct		Elect.
Utility Pole		P.P. or T.P.
Ornamental Light		
Stairway		
Guard Rail		
Fence		
Rockery		
Tree		
Grade		6.7%
Monument		
Tack		
Hub		
Monument or Slope Line		Mon. Line or Slope Line
Survey Line		Survey Line
Construction Center Line		℄
Ex. Grade		Ex. Grade
Proposed Grade		Prop. Grade
Profile Line-Right		R.
Profile Line-Left		L.
Block Lines or Street Margins		
Interior Lot Lines		
Unrecorded Plat Lines		
Property Seg. Lines		

DO NOT SCALE

CITY OF SEATTLE
DEPARTMENT OF ENGINEERING

Standard Symbols

APPROVED BY THE BOARD OF PUBLIC WORKS
JANUARY 8, 1964 — CHAIRMAN
ATTEST: — SECRETARY

Standard Plan No.217

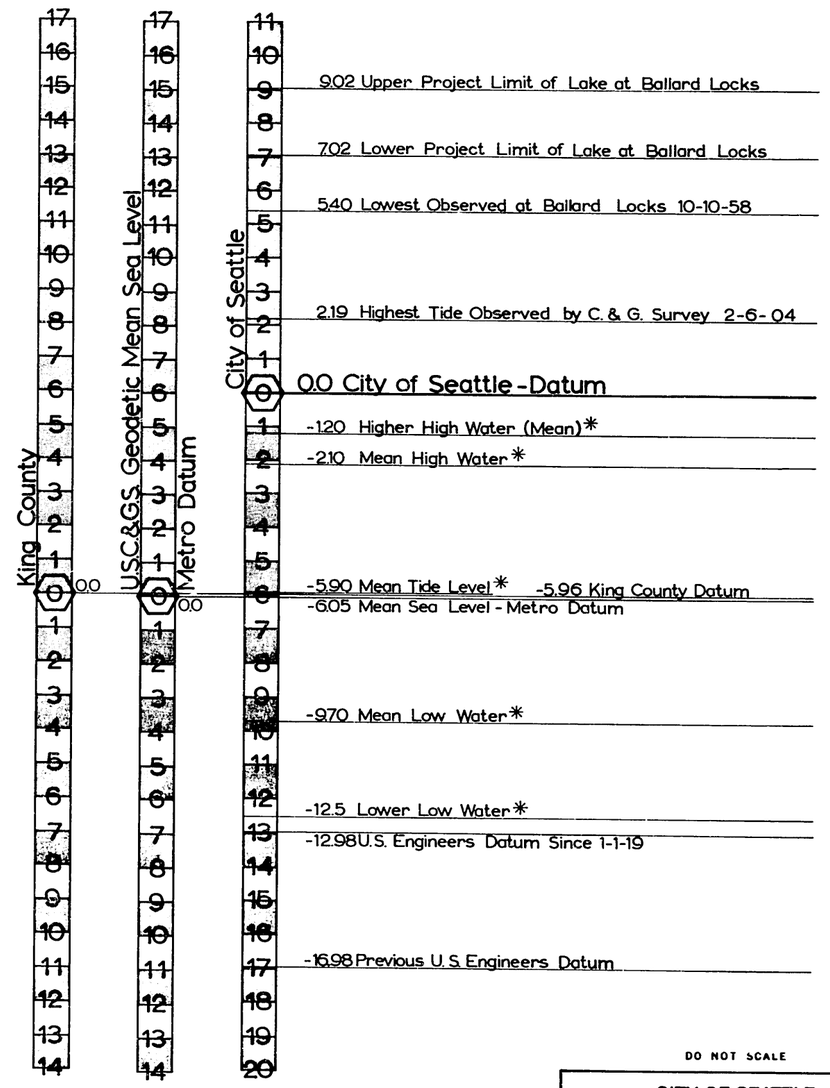

* These elevations vary according to tidal observation.
For the latest figures call the U.S.C.G.S. Office

DO NOT SCALE

CITY OF SEATTLE
DEPARTMENT OF ENGINEERING

Elevations and Datums
11-13-62

APPROVED BY THE BOARD OF PUBLIC WORKS
JANUARY 8, 1964 — CHAIRMAN
ATTEST: — SECRETARY

INDEX TO SPECIFICATIONS

NOTE:

If the reader is unable to find the particular item or subject he seeks in the index, he should refer to the related section in the Table of Contents of this seventh edition.

Page 1 of the Table of Contents contains a complete list of all sections by titles and consecutive numbers. Pages 3 through 12 of the Table of Contents contain complete breakdowns, in numerical sequence, of all sections into entitled subsections representing the related subject matters.

The heavier and bolder type interspersed throughout the index denotes the complete titles of the various sctions as they occur in their alphabetic order.

A

Page

A.A.S.H.O. American Association of State Highway Officials..... 5
Abandon contract 8
Abutting joints in structural steel..... 105
Accelerated subsidence by vertical drains..... 13
Acceptance of work, final..... 10
Access to work (inspection)..... 3
Acquisition of quarry and pit sites..... 18
Addresses—material and inspection organizations..... 5
Adjusting manholes, catch basins.....53, 63, 65
Adjusting pin nuts, anchor bolts, shoes..... 83
Adjusting sprinkler irrigation system. 50
Adjustment of New and Existing Utility Structures to Finish Grade (Sec. 53).... 52
asphalt concrete pavement..... 25
asphalt concrete paving 52
asphalt resurfacing 52
bituminous plant mix..... 22
cement concrete paving 52
furnishing castings 53
inlets 53
manholes 63
manholes, catch basins 52
monuments 50, 53
private and public utilities..... 52
storm and sanitary sewers..... 52
unpaved street grading 52
valve boxes 53
valve box castings..... 76
Aeration, and equipment for..... 14
Affidavit, wage scale paid..... 6
Ageing—concrete piling 91
Aggregates—asphalt concrete pavement..... 23
bituminous plant mix pavement..... 21
bituminous surface treatment..... 21
cement concrete pavement..... 30
cement concrete masonry.....30, 94
cement concrete pipe..... 56
cement concrete railings..... 120
use of substandard gradings..... 30
Agreement, supplemental 2, 3
Air-entrained concrete, for pavement..... 31
Air-entrained portland cement 30
Air—for riveting 84
for seasoning lumber for treatment..... 110
Alignment and grade, structures, railings..... 79
Alignment of steel structures..... 83
Alkali soil or water, concrete exposed to..... 98
Alley Pavement, cement concrete..... 36
extra concrete for approach ramps..... 36
finishing concrete 35
integral inverted alley pavement edge wall..... 36
subgrade 33
Allowance for—materials on hand..... 10
moving crushing plant and extra haul because of..... 18
Alley, bronze 107

Page

Alterations—in work, plans..... 2
rejection of proposals containing..... 2
Altered quantities, payment for 2, 8
Alternate mixes, high-early and portland cement for pavement.. 31
Aluminum covered traffic buttons..... 41
Aluminum paint 115
American Association of State Highway Officials (AASHO)..... 5
American Public Works Association (APWA).....
American Society for Testing Materials (ASTM)..... 5
American Water Works Association (AWWA)..... 5
American Welding Society..... 106
American Wood Preserving Association.....5, 112
Ammoniacal Copper Arsenite (Chemonite) 109, 112
Amount of contract..... 1
Anchor bolts, placed in concrete structure..... 82
in steel structure 83
Angles, end connections..... 105
Annealing, eyebars, steel castings.....105, 107
Annulment of contract (termination)..... 8
Anti-stripping additive 21
Approach, to movable bridge spans..... 80
side road, finishing.....12, 54
Approval .....
materials 80
source of materials 5
working drawings 82
Architectural features, structural, color, etc..... 80
Arterial Street—definition 1
Asbestos cement sewer pipe..... 56
Asphalt 21
basis of measurement..... 21
bituminous surface treatment..... 21
changes in grades, substitutions..... 21
curb, gutter 26
emulsified, paving, subsealing..... 21
materials test methods..... 21
notice of shipment, samples 21
slow, medium and rapid curing..... 21
tack and prime coat.....23, 26
temperature of application..... 21
unauthorized grades, use of..... 21
waterproofing 121
Asphalt Concrete Pavements (Sec. 34)..... 23
aggregates, filler, blending sand..... 24
asphalt, aggregates, proportions, stockpiling.....23, 24
compacting, preleveling, courses..... 25
connections with existing facilities 25
heating aggregates, asphalt..... 25
joints, smoothness, heater-planing.....25, 26
miscellaneous details, samples, finishing..... 26
preparation, heating aggregates 25
preparation of base, connections.....24, 25
preparation of surfaces, removing pavement.....24, 25
proportioning, mixing, hauling..... 25
proportions, asphalt per cent..... 24

Page

spreading, compacting, preleveling ... 25
stockpiling, filler, blending sand ... 24
surface smoothness ... 26
weather, traffic and detours, equipment ... 26

Asphalt Materials (Sec. 27) ... 21
alternate viscosity requirement ... 21
anti-stripping additive ... 21
emulsified ... 21
measure of weight by gallons ... 21
notice of shipment, samples ... 21
paving asphalts ... 21
proportions in asphalt concrete ... 24
slow, medium and rapid curing ... 21
sub-sealing, crack pouring ... 21
temperature of application ... 21
test methods, change in grades ... 21
unauthorized grades ... 21

Assembling and riveting, structural steel ... 83, 104

Assignment of contract ... 8

Associated General Contractors (AGC) ... 1

Authority of engineer and inspector ... 3

Auxiliary lane ... 15

Award and Execution of Contract (Sec.3) ... 2
award, execution, contract bond ... 2
insurances, noncollusion affidavit ... 2

B

Backfill—abutments, inverts, piers, walls, etc. ... 17
gravel backfill for drains ... 19
gravel for drain pipe ... 19
gravel for foundations ... 19

Backfilling—bridges and trestles ... 14, 17
concrete culverts and retaining walls ... 14, 17
cribbing ... 58
excavation for structures ... 17
manholes and catch basins ... 63, 64
mineral aggregates, type number, grading ... 19
pipe culvert ... 14, 17
sprinkler system ... 50
trench for sewer ... 58
unsuitable foundation ... 13, 17

Backfilling, around structures ... 14, 17
filter material for subsurface drain ... 66
manholes ... 63
mineral aggregates, grading, type number ... 19
sewer trench ... 58
side sewers ... 67
water main trench ... 71

Ballast ... 18

Bank Run Gravel, Mineral Aggregates for Streets (Sec. 26) ... 19
classes and grading ... 19
construction of courses ... 19

Bank run gravel, for sewer trench backfill ... 58

Bank run gravel, for water main trench ... 71

Barricades ... 7
barricades and warning lights ... 7
during construction ... 7
maintain 24 hours on concrete paving ... 36
temporary barricades ... 7
unlawful acts with barricades ... 7

Bars—tie ... 31
reinforcing ... 31, 34, 100

Base course—ballast ... 18
crushed surfacing ... 18

Beam Guard Rail (Sec.36) ... 27
erection of rail ... 28
galvanizing ... 28
inspection ... 27
painting ... 28
posts ... 27
treated timber ... 27
precast reinforced concrete ... 27
rail element ... 27
testing ... 28

Bearing surface, planing in structural steel ... 105

Page

Bearing value, timber and piles ... 90, 91, 92

Bedding, classes A, B, for trench ... 57

Bedding, for subsurface drains ... 66

Beginning of work ... 8

Bending, reinforcing steel ... 101

Bents, pile and frame ... 86, 90

Berm, borrow pit ... 14

Bid ... 2
consideration of ... 2
qualifications or reservations in ... 1

Bidder—definition ... 1
causes for disqualification ... 2
familiarity with laws, etc. ... 2
qualification of ... 1

Bidders to examine location of work ... 1

Bills of City departments ... 7

Bituminous materials ... 21

Bituminous coated metal pipe ... 56

Bituminous Plant Mix Pavement (Sec. 33) ... 21
aggregates ... 21
courses, joints, smoothness ... 22
heating aggregates and asphalt ... 22
preparation of surfaces ... 22
proportioning, mixing, hauling ... 22
samples, weather, traffic ... 22
spreading, compacting, preleveling ... 22

Bituminous Surface Treatment (Sec. 32) ... 21
first application of asphalt ... 21
second application of asphalt ... 21
cleanup ... 21
maintenance, equipment, organization ... 21
mineral aggregate, graduations ... 21
patching, defect, weather ... 21
preparation of roadway ... 21
traffic, detours ... 21

Blending sand—asphalt concrete pavement ... 24, 26

Block, concrete manhole ... 62

Block Precast Traffic Curb Type 124 (Sec. 45) ... 42

Blocking or bracing ... 72, 74

Blowoffs ... 74

Board of Public Works ... 1

Bolden salts ... 108

Bolts—anchor, for concrete, steel and timber structures ... 82, 83, 85
for beam guard rail ... 28
rivet—unfinished and turned for steel structures ... 102
washers, etc., for timber structures ... 84

Bond—contract, performance ... 2
proposal and contract bond forms ... 125

Boring eyebars ... 105

Borrow, and borrow pits ... 14

Box girder cell, drainage of ... 83

Bracing in timber structures ... 86

Bridge—definition ... 1

Bridge—approach slab ... 80
concrete structures ... 80
drains ... 79
embankment and backfill ... 14
steel structures ... 83
temporary pedestrian crossing ... 71
timber structures ... 84

Bridge Railings (Sec. 117) ... 120
concrete railings ... 120
metal railings ... 79, 121
timber railings ... 121

Bronze alloy ... 107

Buildings and obstructions, removal of ... 79

Bulk cement—storage of ... 96
weighing equipment for ... 17, 96

Buried objects, water main construction ... 71

Burlap—for concrete masonry ... 99

Buttons—precast concrete, aluminum covered ... 41

Buttons—precast concrete traffic ... 41

C

Page

Camber—diagram, structural steel ... 107
concrete slabs on timber trestle ... 98
falsework on concrete structures ... 81
steel structures ... 83
timber trusses ... 86

Capping for piles ... 92

Caps, timber bridge ... 86

Casting, cast iron—catch basin and inlets ... 64
furnishing new ... 53
manholes ... 62
monuments ... 50
traps ... 64
valve chambers and boxes ... 75

Castings, Steel Forgings and Miscellaneous Metals (Sec. 113) ... 107
steel, gray iron, malleable, steel forgings, bronze ... 107, 108

Catch Basins and Inlets (Sec. 64) ... 64
classification of ... 64
cover castings ... 64
grade adjustment of cover ... 52, 65
location of ... 65
materials for construction ... 64
mortar for jointing and plaster coating ... 62, 64
outlet traps, classification ... 64
pipe openings and connections ... 65

Cement—acceptance of portland cement ... 29
air-entrained for concrete masonry ... 30, 95
air-entrained for paving ... 30
bulk weighing, equipment for ... 17
cement concrete pavement, portland ... 29
high-early-strength for concrete paving ... 30
high-early-strength for concrete structure ... 95
low-alkali for concrete masonry ... 30, 94
low-alkali for concrete paving ... 30, 94
portland, for concrete masonry ... 29, 94
portland entrained, high-early, for concrete pavement ... 30, 31
sampling and acceptance ... 29
storage ... 96

Cement Concrete Combined Sidewalk, Curb and Gutter (Sec. 43) ... 41
excavation, forms, placing, curing ... 41

Cement Concrete Curb, Curb and Gutter (Sec. 40) ... 37
construction, finishing, curing joints ... 37, 38
curb classification, curb and gutter ... 37
materials for, forms, reinforcing steel ... 37

Cement Concrete Driveways (Sec. 41) ... 39
driveway types ... 39
excavation, subgrade, forms ... 39
placing concrete, curing finishing ... 39

Cement Concrete Pavement (Sec. 39) ... 29
aggregate, test methods, water ... 30
aggregates, water, reinforcing steel ... 30, 31
cement, sampling ... 29
cement, storage, kinds of cement ... 29, 30
compact concrete by hand, machine, vibration ... 34
concrete base pavement ... 36
consistency, ready-mixed, mixed at site ... 33
curing, cold weather work ... 35, 97
driveways, bridge approach slab ... 39, 80, 98
finishing ... 35
five classes (mixes) ... 31
forms, joint sealants ... 31
high-early, entrained, aggregates ... 31, 32
joint filler, expansion joints ... 31
joint filler, mats, curing compounds ... 31
joints, finishing concrete ... 34, 35
measuring materials, proportioning ... 32
membrane paper, forms, filler ... 31
mixes, consistency ... 31, 33
mixing, ready-mix, proportioning ... 32, 33
polyethylene sheeting ... 31
reinforcing bars, tie bars ... 31, 36
remove pavement, placing, compacting ... 51, 33, 34
retempering, remixing ... 33
single lane, construction ... 35
single lanes, barricades ... 36
subgrade and compaction, forms ... 33
subgrade for ... 15
subgrade, metal forms ... 33

Page

traffic crossings, barricades, open to traffic ... 36
transporting batch concrete ... 32

Cement Concrete Sidewalks (Sec. 42) ... 40

Cement Concrete Stairways and Landings (Sec. 38) ... 28
concrete placing, finishing and curing ... 29
excavation, subgrade, forms ... 28
railings ... 29
reinforcing steel ... 29

Cement Concrete Structures (Sec. 101) ... 80

Changed conditions—additional payment therefor ... 3
extra work ... 3

Changes and substitution in steel structures ... 103

Channel excavation ... 17

Channel, preservation of ... 17

Channels for manholes ... 63

Chemonite (ammoniacal copper arsenite) ... 109

Chipping asphalt surfaces ... 25, 26

Chlorine, disinfection of water mains ... 73

Chromated zinc arsenate (Boliden Salts) ... 108

Claims—filed against contractor ... 10

Classification of—concrete for masonry ... 94
excavation ... 12, 17

Clay pipe sewer ... 56

Cleanup ... 3, 54

Cleanup—final ... 3, 54
final for structures ... 80

Clearing ... 11
site for structures ... 79

Clearing and Grubbing (Sec. 12) ... 11
acreage basis, lump sum basis ... 11
for sewers, water mains, streets ... 11, 70
ornamental and danger trees ... 11
protection of existing utilities, etc. ... 12

Clearing and grubbing, water mains ... 70

Codes, electrical industry ... 42

Cofferdams, cribs, shoring ... 17

Cold weather work—unfavorable weather
asphalt concrete pavement ... 22, 26
bituminous road mix ... 21, 22
concrete masonry ... 35, 97
concrete pavement ... 35
concrete structures ... 35, 97
surfacing ... 18

Collusion, noncollusion certificate ... 2

Colorimetric test ... 30

Compacting—asphalt concrete ... 25
concrete for pavement ... 34
cut sections ... 14
earth, rock embankments ... 14
filler ... 19
gravel base ... 24
loosened subgrade ... 18
rock and earth embankments ... 14
sewer trench backfill ... 58
subgrade ... 24
subsurface drain ... 66
surfacing ... 25
top soil ... 54
water main trench ... 71

Compaction control test ... 14

Completion date of contract ... 8

Completion of work, time for ... 8

Composite piles ... 87

Concrete—air-entrained ... 30, 31
air-entrained, pavement ... 30, 31
anchor bolt placing ... 82
body girder cells drainage ... 83
bridge railing ... 120
cast-in-place piles ... 87
cement concrete pavement ... 29
cement concrete sidewalk ... 40
cement proportions for classes A through H, AX ... 95
classes A through H, AX ... 94

Page

compacting for pavement 34
consistency, concrete masonry 96
consistency, pavement 33
construction joint 99
curbs 37
curing concrete masonry 99
curing pavement 35
expansion shoes and plates 82
exposed to alkaline soils or sea water 98
finishing on pavement 35
finishing on structures 99, 100
forms 81
foundation seal 97
hand-mixed 96
hand railings 28, 120
holes 82
manhole, catch basins 61, 64
mixes for pavement 31
mixes for structures 94, 96
piling, cast-in-place 87
piling, precast 87
pipe, drain and sewer 56
placed in cold or freezing weather 35
placed under water 98
placing in pavement 33
placing and sequence 97
plastic water stop 94
proportioning aggregates, pavement 32
ready-mixed for pavement 33
ready-mixed for structures 96
retempering 33, 96
roadway and sidewalks of bridges 98
sidewalks 40
standard mixes for pavement 31
storage 96
strength, pavement 30
strength, structures 95
surface finish, classes 35, 99
vibration of 34, 98
water reducing additive 95

Conformity with plans, and deviations 4

Consent of surety 3, 8

Contract—definition 1
abandonment, annulment, termination 8
alterations or additions of work 2
amount of 1
approval of Engineer 2
award of 2
date of completion 8
execution in 10 days 2
extension of time 8
failure to complete on time, liquidated damages 8
failure to execute 2
form for 126
intent of 2
interpretation of documents 1
partial, final and retained percentage payments 10
retained percentage 10
time for completion 8
working days 8

Contract bond, performance bond 1, 6

Contract bond form 125

Contraction joints 31, 35, 40

Contractor—definition 1
accident prevention requirements 6
compliance with laws 6
control of work 4
cooperation by and with others 3
examination of site 1
failure to pay labor, materials 7
furnish construction schedule 7
furnish surety bond 2
liability for damages to utilities 4
liability for patents and processes 7
liability for royalties, patents 7
maintain postal service 7
maintain safeguards on 24-hour basis 7, 36
maintain traffic, signs, etc. 7
maintenance after acceptance 4

Page

method of serving notice to 5
notify all agencies of work start 3
organization, equipment 8
prevailing wage affidavit 6
protect all stakes 4
protests 3
qualification for award 2
responsibility for damages 4
responsibility to public and for work 4
scope of payment 8
unauthorized work or dishonesty 7

Control of Materials (Sec. 6) 5
publications, special tests, storage 5, 6
samples, testing 5

Control of Work (Sec. 5) 3
authority of Engineer 3
duty of inspector, cooperation between contractors 3
maintenance after acceptance 4
protection and moving utilities 4
removal of condemned work 4
verbal agreements 5

Cooperation between contractors 3

Coordination of contract, plans, specifications and special provisions 1, 3

Copper seal 107

Corrugated metal pipes, etc. 56, 65

Cotton mats—curing concrete masonry 35, 99

Countersinking 85

Creosote oil 108, 110

Creosoted piling 87

Cribbing and sheeting, for trench 58

Crushed Surfacing, Ballasting and Stockpiling (Sec. 23) 18
maintenance during work suspension 18
remove and replace surfacing, resurfacing 18
rolling, hauling, courses, equipment 18
surfacing, ballast, stockpiling 18

Cultivation and cleanup 47

Culvert—definition 1

Culvert pipe 59

Curb—asphalt 26
block precast traffic 42
cement concrete 37
classification 37
concrete for 37
curb and gutter 37, 38
curing 38, 41
doweled 37, 38
expansion and contraction joints 38
extruded concrete 41
finished work 38
integral cement concrete 38
precast concrete traffic 41, 42
removal of 50
separate type 38
transitional 38
weep holes 38

Curing—concrete bridge railing 120
concrete curb, gutter 38, 41
concrete manholes 62
concrete pavement 35
concrete piles, precast 90
concrete sidewalks 40
concrete structures 99
culvert, slabs, railings, walls, etc. 35, 99, 35, 120

Curing compounds for concrete pavement 35

D

Damage suit 8

Damages, liquidated 1, 8

Damages to property, contractor responsible for 4

Danger trees 11

Date panels, for concrete structures 81

Debris on private property 11

Page

Defective work, material 4, 6

Definitions and Terms (Sec. 1) 1

Detours 7, 21

Dewatering sewer trench 57

Ditches, roadway 12

Dowel bars 37

Downspouts 79

Drain pipes 56

Drains—bridge 79
curb 38
sidewalk 40

Drawings—contractor responsible for working drawings 3

Driveways—cement concrete 39
classification 39
curing 39
excavation, subgrading preparation and forms 39
placing concrete, consolidation and finishing 39
reinforcing steel 100

Drop hammers 88

Drop manhole 63

Dust palliative oil 18

E

Easements—definition 1
confining operation within 7
contractor notifying those affected of work start 3

Edge finishing of structural steel 105

Embankments—accelerated subsidence 13
aeration equipment 14
approach to bridge structure 14
bridge ends, borrow 14
compacting equipment 15, 17
compaction control test 14
earth and rock, compaction and construction 14
foundation treatment 13
from earth, rock 14
sewers constructed on 68
snow removal from 14
subsidence by vertical sand drains 13
trestle and bridge ends 14

Employment, selection of labor 6

Empty cell process 111

Emulsified asphalt, penetration type 21

End connection, angles 105

Engineer—definition 1
authority defined 3

Engineer, consulting—definition 1

Engineering, locations, line and grade 4

Equipment—bituminous surface treatment 21
for aeration 14
weighing aggregates, etc. 17

Erosion Control (Sec. 47) 43
construction details 44
materials 43
seeding and fertilizing 44

Estimates—interpretation of 1
partial, retained percentage, material on hand 10

Examination of proposed work by bidders 1

Excavation—below grade for streets 12
below grade, in subgrade 12
borrow, pits 14
classifications of 12
concrete sidewalk 40
disposal of surplus and waste material 12
ditch and channel 12
ditches 12
driveways 39
embankments from 13
illuminated terminal nosing 43
measurement, payment 14
overexcavation 13
pavement removal, disposal of excavation material 12

Page

protect improvements, utilities 12
roadway and drainage 12
rock cuts 14
selected material 13
side sewer 67
side street, alley, driveway 12
slides 13
stripping quarries, pits 14
subgrade 12
subsurface drain 65
trench for water mains 70
unsuitable foundation material 13
waste of material, replacement 12

Excavation for Structures (Sec. 17) 17
backfilling 17
classifications, preserve channel 17
cribbing 17
depth of footings 17
disposal of excavation material, approach embankment 17
footing, foundation, pumping, inspection 17
in open pit, foundations, shoring, cribs 17
in rock 14, 59
pumping, inspection 17
shoring, cribs, cofferdams 17
trench for sewer 57, 67

Excess earth 12

Exfiltration test, sanitary sewer 60

Expansion and contraction joints 35, 38

Expansion joint filler 31

Expansion shoe and plate, concrete structure 82

Exploratory holes, shallow depth 72

Explosives—regulations for use 7

Extension, hydrant 77, 78

Extension of time 8

Extra concrete for alley approach ramp 36

Extra concrete for thickened edge 36

Extra excavation for watermains 70

Extra thickness, concrete bridge slabs 82

Extra work and changed conditions 3

Extra work, methods of payment 8

Extruded Asphalt Concrete Curb (Sec. 35) 26
equipment, mixing, joints, curing 26

Extruded curb 26, 41

Eyebars 105

F

Fabric, waterproofing 122

Fabrication of steel, notice of 101, 102

Failure to—complete work on time 8
execute contract 2

Falsework—for concrete structures 81
plans for concrete structures 82
removal from concrete structures 82
steel bridges 83

Fertilizer—soil conditioners 43, 47

Field inspection—structural steel 103

Field tests—piling 89
sewers 60
sprinkler irrigation system 49
watermains 72

Filler (Sec. 24) 19
for asphalt concrete pavement 24
joint sealing 31
sand, crushed 19

Filter material of subsurface drain 66

Final acceptance of construction 10

Final cleanup—quarry and pit sites 18
structures 80
surfacing 18, 54

Final payment for contract 10

Finishing—asphalt concrete pavement 25
bituminous surface treatment 21

Page

bridge roadway and sidewalk slabs ... 40, 98
cement concrete pavement ... 35
concrete bridge railings ... 120
roadway ... 54
sewer manholes, basins, etc., to be cleaned out ... 68
surface finishes for concrete, classes ... 99

Finishing and Cleanup (Sec. 57) ... 54
general ... 3, 54
remove debris and asphalt spray, flush pavement, etc. ... 54

Finishing and Cleanup for Underground Conduits (Sec. 68) ... 68

Fire Hydrants (Sec. 77) ... 76
mounting, connections, dimensions ... 76, 77
nuts, lugs, factory test, painting ... 76
setting, moving existing, extensions ... 76, 77, 78

Flagmen—barricades, signs ... 7
partial reimbursement for ... 7

Floor, bridge—single plank and laminated ... 86
subfloor for concrete deck ... 86

Flushing ... 54, 73

Follower, use of in pile driving ... 89

Footings, depth for structures ... 17

Force account—payment provisions ... 8

Forfeiture of contract ... 8

Forgings, steel ... 107

Forms—concrete pavement ... 31, 33
metal ... 31
wood ... 31
concrete sidewalk ... 40
concrete structures ... 81
curb ... 37
driveways ... 39
piling ... 90
plans for concrete structures ... 82
removal from concrete structures ... 82
stairways and landings ... 28
traffic curb ... 41

Formulas for—pile bearing values ... 90
paints ... 113

Foundation—for structures ... 79
preparation for placing, structures ... 17

Foundation material, for trench ... 58

Frame and grate, for catch basin and inlet ... 64

Framing timber structures ... 85

G

Galvanized—bar steps for manholes ... 62
pipe for sprinkler system ... 48
pull boxes ... 43
railing for stairways ... 28
rails, beam guard ... 28
steel pipe for watermains ... 70
wrought iron pipe for watermains ... 70

Gate Valves for Water Mains (Sec. 75) ... 74
mounting, connections, 16-inch and up ... 75
seals, test at factory, installation ... 75

Girders, plate ... 105

Grading requirements, timber and lumber ... 108

Gravel—removal of bank run ... 19
roadbed surface of bank run ... 19
screened gravel surfacing ... 19
sewer, drain and culvert backfill ... 58
street bank run ... 19
water main trench backfill ... 71

Ground cover plants ... 46, 47

Grubbing ... 11

Guard rail ... 27

Guaranty, water mains one year ... 70

Gutter, curb and gutter ... 37

H

Page

Hammer, pile driving ... 88

Handling—piling ... 89, 91, 92
plants ... 46
steel members ... 83
timber ... 85

Haul (Sec. 14) ... 15
all haul paid for on basis of "units" ... 15
borrow, waste ... 15
haul quantities ... 15
maximum haul distance of waste excavation without pay ... 3
roadway and auxiliary lanes ... 15

Hauling—asphalt concrete mixture ... 25
bituminous plant mix ... 22
crushed surfacing ... 18
water for street ... 16

Health, compliance with state laws ... 7

Heater—planing, for asphalt concrete pavement ... 26
planing, on bituminous pavement ... 22

Highway, Street, Road, Arterial ... 1

Holes—hand, in steel ... 105
pin, structural steel ... 105
punched, reamed, rivet, sub-punched ... 103, 104
rods, bolts, boat spikes on timber bridges ... 85
weep, for curb drains ... 38

Hours of work ... 6

Hydrants, fire ... 76

I

Illuminated Terminal Nosing (Sec. 46) ... 42
casting, conduit, junction box ... 43

Improvement fund ... 5

Incompetent workmen ... 8

Increase or decrease of work ... 2

Industrial insurance ... 6

Infiltration test, sanitary sewer ... 60

Injunctions ... 8

Inlets—adjustment of ... 53
concrete, metal ... 64

Inspection—access for ... 3, 101, 102
beam guard rail ... 27
cast-in-place piles ... 91
field, for structural steel ... 103
foundations—for structures ... 17
lumber and timber ... 108
materials, by Engineer ... 4
mill and shop, structural steel ... 102
paints ... 116
plant material ... 46
reinforcing steel ... 101

Inspector—definition ... 1
authority, duties ... 3

Insurance—compensation, public liability ... 2
contractor to provide ... 2

Integral cement concrete curbs ... 38

Intent of contract ... 2

Interference with other contractors ... 3

Irrigation sprinkler system ... 48

J

Jets, water, for driving piles ... 89

Joint filler, concrete pavement ... 31

Jointing—asbestos-cement pipe water mains ... 72
concrete pipe water mains ... 72
dissimilar pipe ... 60
drains and culverts ... 56
mechanical joint pipe water mains ... 72
rubber gasket joint pipe (Tyton type) water mains ... 72
sanitary sewers, storm drains ... 60
side sewers ... 67
steel pipe ... 72
subsurface drains ... 66

Page

Joints—asphalt concrete pavement ... 25
bituminous plant mix ... 22
cement concrete curb, gutter ... 38
cement concrete masonry ... 99
cement concrete pavement ... 31
construction, concrete ... 34, 97
expansion for concrete masonry ... 99
expansion and contraction for concrete pavement ... 35
expansion and contraction for sidewalks ... 40
extruded asphalt concrete curb ... 26
extruded concrete traffic curb ... 42
for sewer, drain, culvert pipe ... 56, 60
pipe for water mains ... 71, 72
sealing expansion for concrete pavement ... 35, 94
side sewer ... 67
subsurface drain ... 66

Junction box, pull box for illuminating nosing ... 43

Jute matting ... 44, 45

K

Keystone—for ballast ... 18

L

Labor—affidavit, prevailing wage, requirements for selection ... 6

Laboratory, Materials Laboratory ... 21

Laminated bridge floor ... 86

Landings and cement concrete stairways ... 28

Lawn Removal and Replacement (Sec. 56) ... 54

Laws and ordinances, observances of ... 2, 6

Leads, pile driver ... 89

Legal Relations and Responsibility to the Public (Sec. 7) ... 6
contract bond, accident prevention ... 6
protection of workmen and property, labor ... 6
selection of labor, legal wages ... 6
signs, postal service, explosives ... 7
state sales tax, permits, traffic maintenance ... 7

Liability—for patents and processes ... 7
joint, contractor and surety ... 7, 8
of public officials, personal ... 7

Licenses and permits ... 7

Lights, on barricades ... 7

Liquidated damages—definition ... 1
overrun of time ... 8

Loading tests for bearing piles ... 89

Lumber—for concrete structures ... 81
grade requirements ... 108
hewn and round timbers ... 108
inspections ... 108
penetration ... 110
plant and equipment ... 110
preparation for treatment ... 110
preservatives and treatment ... 108
seasoning, surfacing ... 108
seasoning for treatment, incising ... 110
timber structures ... 84

M

Machine finishing concrete pavement ... 33

Mail ... 7

Maintenance—after acceptance ... 4
during suspension of work ... 8
of traffic ... 7

Maintenance rock ... 18

Major item ... 2

Malleable iron castings ... 107

Manholes for Storm and Sanitary Sewers (Sec. 63) ... 61
backfill, drop manhole ... 63
block, brick, precast ... 63
channels ... 63

Page

grade adjustment, connections ... 63
ladder, mortar, frame and cover ... 62
mix, curing, steps ... 62
monolithic concrete, foundation ... 62, 63
pipe connections ... 63
precast components, corrugated metal ... 62
sub-base, bedding ... 62
types and standard plan numbers ... 61

Markers for side sewers ... 67

Masonry—classes of cement concrete, A through H, AX ... 95

Match marking of structural steel ... 104

Materials—defective ... 6
on hand, payment for ... 10
proper storage ... 6
rejection of defective ... 6
samples and tests ... 5
source, quality ... 5
storage, general ... 6
tests ... 5, 6

Materials Laboratory ... 21

Mats, cotton ... 35, 99

Matting jute ... 44, 45

Measurement and Payment (Sec. 9) ... 8
acceptance of construction ... 10
extra work, force account ... 8
progress and final payments ... 10

Mechanical tamper ... 17

Medium curing liquid asphalt (table) ... 21

Mesh—wire, for reinforcing ... 100

Metal ties for forms for concrete structures ... 81

Meter—batch, on concrete paver (counter) ... 33

Mill and shop inspections—structural steel ... 102

Mineral aggregates—for backfill, ballast, bedding, grading ... 19
for bituminous surfaces and pavements ... 21, 22, 23

Mineral filler—asphalt concrete pavement ... 24

Mixing—asphalt concrete for pavement ... 25
bituminous plant mix ... 22
cement concrete for paving ... 33
cement concrete for structures ... 96

Monthly payments ... 10

Monuments (Sec. 50) ... 50
adjust to grade ... 50
case and cover ... 50
precast and poured ... 50

Mortar—catch basin and inlet ... 64
for manholes ... 62
for sack-rubbing of concrete railing ... 120
for waterproofing ... 122
joints for sewer pipe ... 60
strength, concrete aggregates ... 30, 94
strength for concrete pavement ... 30
strength test ... 6
valve chamber for water main ... 75

Mulch ... 43

N

Name plates, for structures ... 79

Navigable streams, account of structures ... 80

Nodular iron castings ... 107

Noncollusion certificate—affidavit ... 2

Normal temperature ... 80

Nosing, illuminated terminal ... 42

Notice—method of serving notice to contractor ... 5
of rolling steel ... 102
of shipment of bituminous material ... 21
to Water Department ... 5

No waiver of legal rights by City ... 7

O

Page

Officials, no personal liability ... 7
Oil mat streets ... 54
Opening—bid proposal ... 2
  bridges to traffic in concrete structure project ... 83
  pavements to traffic ... 36
Order of planting ... 46
Ordering—piling ... 88
  reinforcing bars ... 101
  steel ... 103
Orders to begin work ... 7
"Or equal"—definition ... 1
Ornamental tree ... 11
Ottawa sand, for tests ... 6
Overexcavation ... 13
Owner—definition ... 1

P

Paints and Painting (Sec. 116) ... 112
Paint—containers ... 117
  raw materials ... 112
  sand blasting ... 104, 118
  spray machines ... 118
Paint Formulas ... 113
  A general ... 113
  B red lead shop coat for steel, A-1-57 ... 113
  C shops coat for steel, A-2-57 ... 113
  D red lead sealing paste, A-3-57 ... 114
  E phenolic-red lead primer, A-4-59 ... 114
  F vinyl pretreatment, A-5-61 ... 114
  G zinc dust-zinc oxide primer, A-6-61 ... 114
  H first field coat for steel (red lead), B-1-57 ... 114
  I first field coat for steel (alkyd linseed vehicle), B-2-57 ... 114
  J phenolic first field coat for steel, B-4-59 ... 114
  K black second field coat for steel, C-1-57 ... 114
  L gray second field coat for steel (linseed vehicle), C-2-57 ... 114
  M gray second field coat for steel (alkyd vehicle), C-3-57 ... 114
  N green second field coat for steel (alkyd vehicle) C-4-57 ... 114
  O green second field coat for steel (linseed vehicle), C-5-57 ... 115
  P green phenolic finish coat for steel, C-6-59 ... 115
  Q black enamel, D-4-57 ... 115
  R white guard rail paint (alkyd vehicle), D-5-57 ... 115
  S white guard rail paint (linseed vehicle), D-6-57 ... 115
  T aluminum paint, D-1-57 ... 115
  U white for wood structures, E-1-57 ... 115
  V primer for wood, E-2-62 ... 116
  W orange equipment enamel, F-3-57 ... 116
  X primer for concrete, H-1-57 ... 116
  Y white masonry paint for precast curbs, H-2-62 ... 116
  Z enamels for signs, J-1-57, J-2-57, J-3-57 ... 116
  AA brilliant green sign enamel, J-4-57 ... 116
  AB green stain for wood posts and poles, J-5-57 ... 116
  AC traffic signal yellow enamel ... 116
Painting—application ... 118, 119
  beam guard rail ... 28, 119
  colors of coats ... 117
  erection marks ... 118
  field cleaning and painting ... 118
  galvanized surfaces ... 119
  machine finished surfaces ... 118
  metal guard rail ... 28, 119
  removal of improper paint, thinning ... 118
  repainting existing steel structures ... 118
  shop cleaning and shop painting ... 118
  spraying machines ... 118
  steel structures, new ... 117
  structural steel, new ... 104
  timber structures ... 85, 119
  weather conditions ... 118
Partial payment—pipe for water mains ... 74

Page

Patents, and processes ... 7
Pavement—definition ... 1
  adjacent lanes ... 35
  asphalt concrete ... 23
  bituminous plant mix ... 21
  bituminous surface treatment ... 21
  cement concrete ... 29
  curing cement concrete ... 35
  finishing cement concrete ... 33, 35
  removal of ... 12, 51
  single lane concrete ... 35
Pavement Patching (Sec. 54) ... 54
  on concrete, asphalt and oil mat streets ... 54
Payment—final ... 10
  for materials on hand ... 10
  for Water Department work ... 4
  money withheld to cover claims ... 10
  monthly and partial estimates ... 10
  retained percentages ... 10
  scope of ... 8
  state sales tax ... 7
Pedestrian crossing—water main construction ... 71
Pentachlorophenol—treatment ... 110, 112
Perforated drain pipe ... 65
Permits and licenses ... 7
Personal liability of public officials ... 7
Pile bents ... 90
Piling (Sec. 106) ... 87
  age before driving precast concrete ... 91
  bearing values ... 91, 92
  cast-in-place concrete ... 87, 88, 91
  composite of timber-concrete ... 87
  curing precast concrete ... 90
  destroyed in driving, handling ... 88
  driving steel shells ... 91
  equipment for driving ... 88, 89
  for trestles ... 92
  formulas for bearing values ... 90
  fresh cut heads ... 89
  hammers ... 88
  jets for driving ... 89
  loading test ... 89
  no additional compensation account increase or decrease ... 92
  ordered and not driven ... 88
  ordering piles ... 88
  penetration and driving ... 88, 90, 92
  precast reinforced concrete ... 87, 90
  splicing composites ... 90
  steel ... 87, 88, 92
  storage and handling ... 89, 91, 92
  test piles ... 89
  timber ... 87, 89
  treated and untreated ... 87, 89
Pin nuts, adjusting ... 83
Pins and rollers, structural steel ... 105
Pipe—asbestos, sewer ... 56
  asphalt, coated (bituminous) ... 56
  bedding and cover for sewer on embankment ... 68
  cleaning, testing sewer pipe ... 60, 61
  concrete, vitrified clay, abestos-cement, corrugated metal ... 56
  concrete culvert ... 56
  concrete sewer ... 56
  laying iron, asbestos-cement, steel, concrete, for water mains ... 71, 72
  metal, corrugated or plain ... 56
  perforated ... 65
  pipe and fittings, sprinklers ... 48
  sewer, drain, culvert ... 56
  side sewer ... 66
  subsurface drains ... 65
  tolerance in laying sewer, culvert ... 59
  vitrified clay sewer ... 56
  water mains ... 70
Pipe Connections (Sec. 69) ... 68
  catch basin ... 68
  excavation and backfill ... 68
  inlet ... 69
  standing ... 69

Page

Pipe Covering and Embankment for Sewer Construction (Sec. 67) ... 68
  pipe bed, cover, source of materials ... 68
Pipe culvert—asphalt covered ... 65
  concrete pipe ... 56
  fiber bonded ... 56
  metal pipe ... 65
Pipe for Water Mains (Sec. 72) ... 70
  couplings, fittings, wrought iron ... 70
  iron, asbestos-cement, concrete, steel ... 70
Pipe Installation for Water Mains (Sec. 74) ... 71
  connections, field tests ... 72
  dewatering, handling, lay on curve ... 71
  disinfection, concrete blocking ... 73, 74
  jointing mechanical joint pipe ... 72
  laying asbestos-cement, steel ... 72
  laying cast iron pipe ... 71
  laying concrete pipe ... 72
Pipe Laying, Bedding and Testing (Sec. 62) ... 59
  dewatering, bedding, jointing ... 59, 60
  laying sewer pipe, culvert pipe ... 59
  sewer and manhole connections ... 60, 63
  testing—exfiltration, infiltration ... 60
Pipe Materials and Testing for Sewers, Drains and Culverts (Sec. 60) ... 56
  kinds of pipe, joints, fittings ... 56
Pits—acquisition ... 18
  borrow ... 14
Pits, Quarries, see Section 22 ... 17
Plans—definition ... 1
  changes in ... 2
  discrepancies in, see Section 2.03 ... 1
  falsework and forms ... 82
  shop, structural steel ... 103
  specifications—examine on site ... 1
Planting and sidewalk areas ... 12
Planting, roadside ... 45
  cultivation and cleanup ... 47
  fertilizers and soil conditioners ... 47
  handling and shipping ... 46
  inspection plant material ... 46
  pruning, staking and guying ... 47
  replacement ... 47
  sawdust mulch ... 47
  substitutes ... 46
  tagging plant material ... 46
  temporary storage ... 46
Plastic water stop ... 94
Plate girders ... 105
Platform scales ... 17
Portland cement ... 29, 94, 122
Portland Cement Concrete for Structures (Sec. 107) ... 94
Postal service—not to be interrupted ... 7
  to be maintained ... 78
Posts—steel beam guard rail ... 27
  treated timber and concrete for beam guard rail ... 27
Power—telephone and utility lines, removal of ... 4, 79
  use of ... 4
Precast concrete piles ... 87
Precast Traffic Curb, Type 123, Traffic Buttons and Extruded Traffic Curb (Sec. 44) ... 41
  installation of curbs and buttons ... 42
  mixing, forms, curing, finishing ... 41
Preference in employment of labor ... 6
Preservative Treatment for Timber, Lumber and Piles (Sec. 115) ... 108
Pressure treatment for timber ... 110
Prevailing rates of wages ... 6
Private driveways ... 39
Production from Quarry and Pit Sites (Sec. 22) ... 17
  acquisition, preparation, production ... 18
  pay for moving plant, water tolerance ... 18
  scalping, stockpiling ... 18
Progress schedule to be furnished by contractor ... 7
Property, protection and restoration of ... 4

Page

Property owners, consent of ... 4
Proposal—definition ... 1
  alterations prohibited ... 2
  causes for rejection, City right to reject ... 2
  delivery and time of ... 2
  opening of bids ... 2
  preparation of ... 1
  supplemental ... 2
  withdrawal or revision ... 2
Proposal form, contents of ... 1
Proposal guaranty, bid bond—definition ... 1
  check, cash, bond ... 2
  return of deposits ... 2
Proposal Requirements and Conditions (Sec. 2) ... 1
  alterations, rejection, guaranty ... 1, 2
  examination of site, bidder qualification ... 1
  preparation, delivery, withdrawal of proposal ... 1, 2
Prosecution and Progress (Sec. 8) ... 7
  schedule, notice to proceed ... 7, 8
  suspension of work time for completion ... 8
  unavoidable delays, liquidated damages ... 8
Protests ... 3
Pruning ... 47
Public—convenience and safety ... 7
  officials, personal liability ... 7
  opening of bids ... 2
Publications—ASTM, AASHO, AWWA ... 5
  relating to materials specifications ... 5
Pumping—for sewer construction ... 56
  for structure excavation ... 17

Q

Qualification of workmen ... 6
Quality of material and source of supplies ... 5
Quantities—approximate only ... 1
  increase or decrease of timber piling ... 1, 88, 93
  right to increase, decrease ... 1, 8
Quarries, Pits—acquisition of sites ... 18
  compensation for moving plant ... 18
  final cleanup ... 18
  preparation of site ... 18
  production from ... 18
  scalping, stockpiling ... 18
Quick coupler valves ... 48

R

Rail, beam guard ... 27
Railings—bridge, concrete, metal and timber ... 120, 121
  concrete stairways ... 29
  metal for structures ... 79
  timber structures and wheel guard ... 86
Railroad crossings ... 7
Rapid curing liquid asphalt (table) ... 21
Rated capacity—concrete mixers ... 33
Ready-mixed concrete ... 33, 96
Reaming holes in structural steel ... 104
Reconnecting existing hydrants ... 77
References for specifications and methods of test ... 5
Reinforcing Steel (Sec. 111) ... 100
  bending, butt welding, inspection, ordering ... 101
  placing and fastening, splicing ... 101
  weight of bars (table) ... 102
  wire mesh ... 100
Reinforcing steel—for concrete curbs ... 37
  for concrete pavement ... 31, 34
  for concrete stairways ... 29
  for traffic buttons ... 41
Reinforcing steel bars ... 31, 100, 101

Page

Rejection of bids—proposal 2
concrete pipe 60
materials, steel structures 83
reinforcing steel 101
structural steel 103
Removal of Existing Street Improvement (Sec. 52) 50
catch basin, manhole, inlet sump 51
cement concrete sidewalk 51
curb and gutter, asphalt pavement 51
curbs, pavement, sidewalk 22, 50, 51
Removal of—defective and unauthorized work 4
existing pavement 51, 78
forms and falsework 82
improper paint 118
overburden from quarries and pits 19
utilities, power and telephone lines 4
water mains 78
Repainting existing steel structures 118
Resloping 13
Responsibility for damages 4
Restoration and Cleanup of Water Main Construction (Sec. 78) 78
Resurfacing 18
Retained percentage 10
Retaining walls 80
Retempering, concrete 33
Ribbons, forms for concrete paving 31, 33
Right of way 7
easement definition 1
Rivets, for structural steel 104
Rivets and Riveting—bridge steel 83, 104
holes in structural steel 103
shop structural steel 104
Roadside Planting (Sec. 48) 45
Roadway—definition 1
Rock—crushers, moving of 18
cuts 12
drains, sidewalk 40, 50
embankments 14
Rollers—asphalt concrete 25
bituminous road mix, surface treatment 22
compactors, tampers 15
subgrade for cement concrete pavement 15, 33
Royalties and patents 7
Rubber gasketed pipe 56
Rubber sealed expansion joints 94

S

Safeguards 7
Safety nets and staging 80
Sales tax, state 7
Salvage of materials 3
Samples and sampling—asphalt materials 21
portland cement 29
Samples and tests, general 5
Sand drains, vertical, and drainage blanket 13
Sand equivalent test 6
Sand filler 19
Sandblasting, structural steel 104
Sanitary provisions 7
Sanitary sewers and storm drains 56, 59
backfilling trenches 58
bedding, backfill, classification of 57
clean up 3, 54, 68
clearing and grubbing 11
compacting trench backfill 58
cribbing and sheeting 58
culvert pipe 59
excavation 57
excavation around existing appurtenances 12
finishing and cleanup 54
fittings 56
jointing, pipes 56, 60

Page

lawn removal and replacement 58
laying pipe 59
pipe 56
rock excavation for 14, 59
testing 60
Sawdust mulch 47
Scales, weighing 17
Schedule of work—contractor to finish 7
Scope of Work (Sec. 4) 2
contract intent, increase or decrease 2
extra work, changed conditions 3
Screened Gravel Surfacing—One Course (Sec. 25) 19
Screw threads 107
Seal, foundations 97, 98
Seals—copper 107
plastic 94
Seed, erosion control 43
Selected material, in excavation 13
Selection of labor 6
Septic tank and cesspools 67
Sheeting, left in water main trench 71
Shoes, bridge, setting and grouting 83
Shop details for timber bridges 85
Shoring—cribs, cofferdams for structure excavation 17
Shoulders, for surfacing 18
Side Sewers (Sec. 66) 66
excavation, laying, jointing, testing 67
pipe end marker wire 67
pipe, joints, fittings 66
Sidewalks, cement concrete 40
curing, drains, forms, joints 40
removal of existing 51
Sieves for testing 6
Signs, traffic—furnishing for temporary traffic control 7
maintenance during bituminous paving 22
removing, storing and resetting 7
Single-lane concrete pavement construction 35
Site, examination of, by bidders 1
Slab forms on steel spans 82
Slides 13
Slow curing liquid asphalt (table) 21
Sluicing recommended for quarry sites 18
Slump test 33, 96
Snow removal, prior to grading 14
Source and quality of materials 5
Spandrel—arches 97
Spans, approach to movable 80
Special fittings 74
Special provisions—definition 1
Specifications—definition 1
coordination with contract, plans, special provisions 1, 3
Specifications, supplemental—definition 1
Splicing—composite piles, timber, steel 90, 92
reinforcing steel 101
stringers, wood 86
Sprinkler Irrigation System (Sec. 49) 48
automatic controls, tubing and valves 48
excavation for adjacent to trees 49
flushing and testing 49
hose bibs 48
vacuum breakers 49
Stairways, cement concrete—landings, railings for 28, 29
Stakes, construction 4
Standard forms—proposal, contract, bond, etc. 123
State Department of Labor and Industries 6
State sales tax 7
Steel bars, for reinforcing 100, 101
Steel Structure (Sec. 102) 84
Steps and ladders, for sewer manholes 62, 64

Page

Stockpiling—aggregates for asphalt concrete pavement 24
ballast, crushed surfacing 18
bituminous road mix 22
bituminous surface treatment 18
for asphalt concrete 24
Storage—aggregates for portland cement concrete 96
explosives 7
lumber for timber structures 85
materials, general 6
piling 89, 91, 92
portland cement 29, 96
properties of paint 117
structural steel 103
waterproofing fabric 122
Straighten bent material, steel 83, 103
Street and Drainage Excavation (Sec. 13) 12
classification of excavation 12
embankments 13
excavation below grade 12
overexcavation 13
slides 13
Street, road, alley—definition 1
Streets, temporary barricades 7
Strength of—concrete 30, 95
mortar 30
pipe, concrete 56
Stringers, timber bridge 86
Stripping—forms and falsework from structures 82
quarries, pits 14
Structures—concrete 80
Structures—General (Sec. 100) 79
steel 83
timber 84
Subcontractor—definition 1
Subgrade (Sec. 15) 15
compacting equipment, rollers, etc. 15
definition 1
for base materials 15
for cement concrete driveways 39
for cement concrete pavement 15, 33
for cement concrete sidewalk 40
for cement concrete stairways and landings 28
protection for paving 16
Subletting contract work 2
Subsurface Drains (Sec. 65) 65
excavation, pipe, jointing, laying, backfilling 65, 66
Suits, damage 8
Superstructure, of bridge 84
Supplemental agreement 2
Surety—definition 1
consent for extra work covered by supplemental agreement 3
consent for time extension 3, 8
Surfacing—definition 1
additional pay for haul account of changed site 18
base, top, ballast, stockpiling 18
construction of courses 18
crushed, base, top 18
daylight hours for work 18
equipment minimum required 18
final cleanup 18
maintenance during work suspension 18
maintenance rock 18
per cent of water payable 18
resurfacing, maintenance 18
screened gravel 19
surplus screenings property of City 18
Surplus material, disposal of 3, 12, 21
Suspension of work for extended period 8

T

Tagging planting material 46
Tamper, mechanical 15, 17, 58
Tanalith (Wolman Salts) 109

Page

Tax, state sales tax 7
Taxes, force account work 8
Temporary bridge for pavement 36
Temporary storage of plants 46
Temporary wood bridge for pedestrians 71
Terminal nose casting for traffic dividers 43
Terms, meaning of 1
Test piles—basis for ordering piles 88
Testing—sanitary sewer 56
side sewer 67
storm drain 56
water mains 72
Tests—aggregates for cement concrete 30
asphalt materials 21
beam guard rail 28
compaction control for embankments 14
field test, disinfection for water main 72, 73
fire hydrants at factory 76
gate valves at factory 75
hydrostatic for acceptance, sewers, storm drains 60
loading for piles 89
materials, general 6
mineral aggregates 19
paints 117
piles 89
sewers 56
special methods for: asphalt concrete mixtures, breakage, immersion-compression, resistance value, waterproofing, etc. 6
Threads—screw, structural steel 107
Tie bars, pavement 31
Timber and Lumber (Sec. 114) 108
Timber piling 87, 89
Timber Structures (Sec. 103) 84
framing, caps, bracing, stringers, trusses, railing, floors 85, 86
lumber, bolts, washers and other metal 84
Time for completion 8
Top Soil (Sec. 55) 54
source, placement, removal and replacement 54
Traffic—definition 1
Traffic button, precast concrete, aluminum covered 41
Traffic curb, extruded concrete 41, 42
Traffic curb, precast block, Type 124 42
Traffic curb, precast concrete, Type 123 41
Trap, for catch basin 64, 65
Traveled way—definition 1
Treated—piling 87, 89
timber, lumber, piles 108
Trees—protection of 4
removal 11
Tremie 98
Trench Excavation and Backfill for Water Mains (Sec. 73) 70
backfilling, compacting trench 71
bank run gravel, sheeting, pedestrian crossings 71
buried objects, unsuitable material 71
underground utilities, excavation 70
Trench Excavation, Backfill, Foundation and Bedding for Sewers, Drains and Culverts (Sec. 61) 56
bedding classes, foundation material 57
compaction of backfill, cribbing and sheeting 58
control of material piled alongside trench 57
excavation and backfill, requirements of 57, 58
imported backfill material 58
top soil and lawn removal, replacement 58
width of trenches 57
Trestle ends—embankments at 14
Trestle piles 92
Trusses, timber structure 86

U

Unauthorized work, removal of 4
Unavoidable delays 8

Page

Underdrains, perforated pipes 65
Underweights, no pay adjustment 17
Unforeseen conditions 3
"Unit"—measure of haul 15
Unsuitable foundation material 13
  displacement of 13
Untreated timber piles 87
Usable materials, salvage of 3
Utilities, adjusting existing structures 52
  contractor to protect 4
  damage to 4
  general for structures site 79
  private in street 12
  removal ahead of work 4
  subsurface drain construction 66
  water main construction 70

V

Vacuum breakers 49
Valve box, cast iron 76
Valve Chambers and Boxes for Water Mains (Sec. 76) 75
  cast iron valve box 76
  precast concrete chambers, cast-in-place, blocks 75
  setting cover, chamber drain 75
Valves, sprinkler system, water mains 48, 74
Verbal agreement—not binding on City 5
Vertical sand drain, sand blanket 13
Vertical sand drains 13
Vibration—concrete masonry 98
  concrete pavement 36
Vibratory compactors 15, 58
Vitrified clay—pipe, sewer and drain 56, 65

W

Wages—compliance with scale and affidavit 6
Waiver of legal rights, no 7
Walls, retaining 80
Warning lights and barricades 7
Washing pavement 36
Waste sites—three kinds 3
Wasting excavated material, debris 12, 51
Water (Sec. 16) 16
  asphalt concrete pavement 26
  bituminous road mix 23
  bituminous surface treatment 21
  cement concrete masonry 95, 96
  cement concrete pavement 31, 32
  for streets, trenches, catch basins 16
  gravel base, surfacing 18
  measurement and payment for application 17
  reducing additive 95
  source, hydrant requirements 16

Page

  stop material, plastic 94
  subgrade use 15
  tank sprinkling, jetting, sluicing 16, 17
Water and power, arrangement for 4
Water Department—assuming cost 5
  notice to 5
Water Department service connections 72
Water mains—construction 70, 78
Waterproofing (Sec. 118) 121
  application, asphalt, fabric, protection course 121, 122
Weather, unfavorable for—asphalt concrete 26
  bituminous road mix 22
  bituminous surface treatment 21
  cement concrete masonry 97
  cement concrete paving 35
  crushed surfacing 18
Web plates, splices, stiffeners, fillers 105
Weep holes for curb drains 38
Weighing Equipment (Sec. 21) 17
  for aggregates, bulk cement 17
  underweights 17
Weight of—asphalt 21
  reinforcing steel 102
  structural steel 103
Welds, reinforcing steel, structural steel 101, 106
West Coast Lumber Inspection Bureau 108
Western Pine Association 108
Wheel guard and railing 86
Wire, cold drawn for reinforcing 101
Wolman Salts, preservative 109, 112
Wood walk crossing, temporary, for pedestrians 71
Work—definition 1
  acceptance of 10
  alterations in or additions to 3
  changed conditions and extra 3
  defective and unauthorized 4, 6
  delays, unavoidable 8
  failure to complete on time 8
  final acceptance 10
    by blocks or by all 10
  force account 8
  increase or decrease in 2
  inspection of samples 4
  payment by bid items—definition 1
  prosecution and suspension of 8
  suspension for extended period 8
  time for completion 8
  unauthorized or dishonest 7
Working days, definition and procedure 8
Written notice to contractor, method of serving 5

X, Y (None)

Z

Zinc coating 28