CHAPTER 1

SCOPE AND ADMINISTRATION

Note: Chapter 1 is entirely Seattle amendments to the *International Building Code* and is not underlined.

PART 1—SCOPE AND APPLICATION

SECTION 101
TITLE, PURPOSE AND SCOPE

101.1 Title. This subtitle shall be known as the "Seattle Building Code," may be so cited, and is referred to herein as "this code."

101.2 Scope. This code applies to the construction and occupancy of any building or structure within the City. Repair, alteration, *change of occupancy*, addition to, relocation and maintenance of buildings and structures shall comply with this code as required by the International Existing Building Code. This code applies to *unsafe* buildings, structures, equipment and premises. See Chapter 32 for regulation of structures located on, over or under public property or a public right of way.

Exceptions:

1. Detached one- and two-family *dwellings* and multiple single-family *dwellings* (townhouses) not more than three *stories above grade plane* in height with a separate means of egress, and their accessory structures not more than three *stories above grade plane* in height, shall comply with the *International Residential Code*.
2. This code does not apply to public utility towers and poles, mechanical equipment not specifically regulated in this code, construction equipment and structural components thereof, and hydraulic flood control structures.

101.2.1 Existing buildings. The International Existing Building Code applies to the repair, alteration, *change of occupancy*, addition to, relocation and maintenance of *existing buildings*.

101.3 Applicability of city laws. A building permit application shall be considered under applicable city law in effect on the date a valid and fully complete building permit application is submitted or on a date as otherwise required by law.

Exception: For any project for which an associated, unexpired master use permit has been issued, a building permit application shall be considered under the versions of Seattle Municipal Code Title 23, Seattle *Land Use Code*; Seattle Municipal Code Chapter 25.09, Environmentally Critical Areas regulations; and Seattle Municipal Code Chapter 25.09, Tree Protection regulations in effect on the date established by Seattle Municipal Code Section 23.76.026 or 23.76.032.C.1 for consideration of the master use permit, unless that date is later than the date of the complete building permit application. This exception does not apply to a subdivision or short subdivision component of a master use permit.

Note: Applicable city law includes but is not limited to the Seattle Municipal Code Title 23, Seattle *Land Use Code*; Seattle Municipal Code Chapter 25.09, Environmentally Critical Areas regulations; Seattle Municipal Code Chapter 25.09, Tree Protection regulations; and the Seattle Building, Mechanical, Fuel Gas, Energy, Stormwater, Grading and Side Sewer codes.

101.3.1 Complete building permit applications. A building permit application is complete if the *building official* determines it meets the requirements of Sections 106.5.1 through 106.5.7, and the application includes, without limitation, the *construction documents* for the architectural and structural components of the building.

Exception: If the *building official* allows a building permit application to be submitted in phases for portions of a building, each phased portion submittal shall meet the requirements of Sections 106.5.1 through 106.5.7 applicable to the scope of the allowed phased portion, and the building permit application shall be considered complete for the purposes of Section 101.3 on the date the phased portion submittal that includes the structural frame for the entire building is submitted.

101.3.2 Initial tenant improvements. Complete permit applications for the initial tenant alterations submitted no later than 18 months after the date of the *approved* final inspection for the building shall be considered under the codes applicable to the permit application for the building in accordance with Section 101.3.

Complete permit applications for initial tenant alterations submitted more than 18 months after the date of the *approved* final inspection for the building shall comply with the codes in effect at the time of application.

101.4 Purpose. The purpose of this code is to provide minimum standards to safeguard life or limb, health, property and public welfare by regulating and controlling the design, construction, quality of materials, occupancy, location and maintenance of buildings and structures within the City and certain equipment specifically regulated herein. The purpose of this code is to pro-

DRAFT

vide for and promote the health, safety and welfare of the general public, and not to create or otherwise establish or designate any particular class or group of *persons* who will or should be especially protected or benefited by the terms of this code.

101.5 Internal consistency. Where in any specific case, different sections of this code specify different materials, methods of construction or other requirements, the most restrictive governs. Where there is a conflict between a general requirement and a specific requirement, the specific requirement governs.

101.6 Referenced codes and standards. The codes and standards referenced in this code are considered part of this code to the extent prescribed by each such reference. If differences occur between provisions of this code and referenced codes and standards, the provisions of this code apply, except that nothing in this code limits the effect of any provision of the Grading Code, Stormwater Code, or Regulations for Environmentally Critical Areas.

101.7 Appendices. Provisions in the appendices of the *International Building Code* do not apply unless specifically adopted.

101.8 Metric units. Wherever in this code there is a conflict between metric units of measurement and U.S. customary units, the U.S. customary units govern.

SECTION 102
UNSAFE BUILDINGS, STRUCTURES OR PREMISES

102.1 Emergency order. Whenever the *building official* finds that any building or structure or premises, or portion thereof is in such a dangerous and *unsafe* condition as to constitute an imminent hazard to life or limb, the *building official* may issue an emergency order. The emergency order may (1) direct that the building, structure or premises, or portion thereof be restored to a safe condition by a date certain; (2) require that the building, structure or premises, or portion thereof, be vacated within a reasonable time to be specified in the order, or in the case of extreme danger, may specify immediate vacation of the building, structure or premises, or portion thereof; or (3) authorize immediate disconnection of the utilities or energy source.

102.1.1 Service of emergency order. The order shall be posted on the premises or personally served on the owner of the building or premises or any *person* responsible for the condition. The order shall specify the time for compliance.

102.1.2 Effect of emergency order. No *person* may occupy a building, structure or premises, or portion thereof, after the date on which the building is required to be vacated until the building, structure or premises, or portion thereof, is restored to a safe condition as required by the order and this code. It is a violation for any *person* to fail to comply with an emergency order issued by the *building official*.

102.2 Hazard correction order. Whenever the *building official* finds that an *unsafe* building, structure or premises exists, the *building official* may issue a hazard correction order specifying the conditions causing the building, structure or premises to be *unsafe* and directing the owner or other *person* responsible for the *unsafe* building, structure or premises to correct the condition by a date certain. In lieu of correction, the owner may submit a report or analysis to the *building official* analyzing said conditions and establishing that the building, structure or premises is, in fact, safe. The *building official* may require that the report or analysis be prepared by a licensed engineer and may require compliance with the International Existing Building Code.

102.2.1 Service of hazard correction order. The order shall be served upon the owner, agent or other responsible *person* by personal service or regular first class mail addressed to the last known address of such *person* or if no address is available after reasonable inquiry, the order may be posted in a conspicuous place on the premises. The order may also be posted if served by personal service or first class mail.

102.2.2 Effect of hazard correction order. It is a violation for any *person* to fail to comply with a hazard correction order as specified in this subsection.

SECTION 103
ENFORCEMENT, VIOLATIONS AND PENALTIES

103.1 Violations. It is a violation of this code for any *person* to:

1. Erect, construct, enlarge, repair, move, improve, remove, convert, demolish, equip, occupy, inspect or maintain any building or structure, or cause or permit the same to be done, in the City, contrary to or in violation of any of the provisions of this code;
2. Knowingly aid, abet, counsel, encourage, hire, induce or otherwise procure another to violate or fail to comply with this code;
3. *Use* any material or to install any device, appliance or equipment that does not comply with applicable standards of this code or that has not been approved by the *building official*;
4. Violate or fail to comply with any order issued by the *building official* pursuant to the provisions of this code or with any requirements of this code;

DRAFT

5. Remove, mutilate, destroy or conceal any notice or order issued or posted by the *building official* pursuant to the provisions of this code, or any notice or order issued or posted by the *building official* in response to a natural disaster or other emergency;
6. Conduct work under a permit without requesting an inspection as required by Section 108.

103.2 Notice of violation. If, after investigation, the *building official* determines that standards or requirements of this code have been violated or that orders or requirements have not been complied with, the *building official* may issue a notice of violation upon the owner, agent, or other *person* responsible for the action or condition. The notice of violation shall state the standards or requirements violated, shall state what corrective action, if any, is necessary to comply with the standards or requirements, and shall set a reasonable time for compliance.

103.2.1 Service of notice of violation. The notice shall be served upon the owner, agent or other responsible *person* by personal service or regular first class mail addressed to the last known address of such *person* or if no address is available after reasonable inquiry, the notice may be posted in a conspicuous place on the premises. The notice may also be posted if served by personal service or first class mail. Nothing in this section limits or precludes any action or proceeding to enforce this code, and nothing obligates or requires the *building official* to issue a notice of violation prior to the imposition of civil or criminal penalties.

103.2.2 Review of notice of violation by the building official. Any *person* affected by a notice of violation issued pursuant to Section 103.2 may obtain a review of the notice by making a request in writing to the *building official* within ten days after service of the notice. When the last day of the period computed is a Saturday, Sunday, or city holiday, the period runs until 5 p.m. of the next business day.

103.2.2.1 Review procedure. The review shall occur not less than ten nor more than 20 days after the request is received by the *building official* unless otherwise agreed to by the *person* requesting the review. Any *person* affected by the notice of violation may submit additional information to the *building official*. The review shall be made by a representative of the *building official* who will review any additional information that is submitted and the basis for issuance of the notice of violation. The reviewer may request clarification of the information received and a site visit.

103.2.2.2 Decision. After the review, the *building official* shall:

1. Sustain the notice;
2. Withdraw the notice;
3. Amend the notice; or
4. Continue the review to a date certain.

103.2.2.3 Order. The *building official* shall issue an order containing the decision within 15 days of the date that the review is completed and shall cause the order to be mailed by regular first class mail to the *persons* requesting the review and the *persons* named on the notice of violation, addressed to their last known addresses.

103.3 Stop work orders. The *building official* may issue a stop work order whenever any work is being done contrary to the provisions of this code or contrary to a permit issued by the *building official*, or in the event of dangerous or *unsafe* conditions related to construction or demolition. The stop work order shall identify the violation and may prohibit work or other activity on the site.

103.3.1 Service of stop work order. The *building official* shall serve the stop work order by posting it in a conspicuous place at the site. If posting is not physically possible, the stop work order may be served by personal service or by regular first class mail to the last known address of: the property owner, the *person* doing or causing the work to be done, or the holder of a permit if work is being stopped on a permit. For purposes of this section, service is complete at the time of posting or of personal service, or if mailed, three days after the date of mailing. When the last day of the period so computed is a Saturday, Sunday or city holiday, the period runs until 5 p.m. on the next business day.

103.3.2 Effective date of stop work order. Stop work orders are effective when posted, or if posting is not physically possible, when one of the *persons* identified in Section 103.3.1 is served.

103.3.3 Review of stop work orders by the building official. Any *person* aggrieved by a stop work order may obtain a review of the order by delivering to the *building official* a request in writing within two business days of the date of service of the stop work order.

103.3.3.1 Review procedure. The review shall occur within two business days after receipt by the *building official* of the request for review unless otherwise agreed by the *person* making the request. Any *person* affected by the stop work order may submit additional information to the *building official* for consideration as part of the review at any time prior to the review. The review will be made by a representative of the *building official* who will review all additional information received and may also request a site visit.

103.3.3.2 Decision. After the review, the *building official* may:

1. Sustain the stop work order;

DRAFT

2. Withdraw the stop work order;
3. Modify the stop work order; or
4. Continue the review to a date certain.

103.3.3.3 Order. The *building official* shall issue an order containing the decision within two business days after the review is completed and shall cause the order to be sent by regular first class mail to the *person* or *persons* requesting the review, any *person* on whom the stop work order was served, and any other *person* who requested a copy before issuance of the order, addressed to their last known address.

103.4 Occupancy violations. Whenever any building or structure is being occupied contrary to the provisions of this code, the *building official* may order such occupancy discontinued and the building or structure, or portion thereof, vacated by notice.

103.4.1 Service of notice of occupancy violation. The notice of occupancy violation shall be served upon the owner, agent or other responsible *person* by personal service or regular first class mail addressed to the last known address of such *person* or if no address is available after reasonable inquiry, the notice may be posted in a conspicuous place on the premises. The notice may also be posted if served by personal service or first class mail.

103.4.2 Compliance with notice of occupancy violation. Any *person* occupying the building or structure shall discontinue the occupancy by the date specified in the notice of the *building official*, or shall make the building or structure, or portion thereof, comply with the requirements of this code; provided, however, that in the event of an *unsafe* building, Section 102 may apply.

103.5 Civil penalties. Any *person* violating or failing to comply with the provisions of this code shall be subject to a cumulative civil penalty in an amount not to exceed $500 per day for each violation from the date the violation occurs or begins until compliance is achieved, except that the penalty for violations of Section 3107.4.1 shall be $1500 per day. In cases where the *building official* has issued a notice of violation, the violation will be deemed to begin, for purposes of determining the number of days of violation, on the date compliance is required by the notice of violation.

103.6 Enforcement in Municipal Court. Civil actions to enforce Title 22 of the Seattle Municipal Code (SMC) shall be brought exclusively in Seattle Municipal Court, except as otherwise required by law or court rule. In any civil action for a penalty, the City has the burden of proving by a preponderance of the evidence that a violation exists or existed; the issuance of a notice of violation or of an order following a review by the *building official* is not itself evidence that a violation exists.

103.7 Judicial review. Because civil actions to enforce Title 22 SMC must be brought exclusively in Seattle Municipal Court pursuant to Section 103.6, orders of the *building official* including Notices of Violation issued under this chapter are not subject to judicial review pursuant to Chapter 36.70C RCW.

103.8 Alternative criminal penalty. Anyone who violates or fails to comply with any notice of violation or order issued by the *building official* pursuant to this code or who removes, mutilates, destroys or conceals a notice issued or posted by the *building official* shall, upon conviction thereof, be punished by a fine of not more than $5000 or by imprisonment for not more than 365 days, or by both such fine and imprisonment for each separate violation. Each day's violation shall constitute a separate offense.

103.9 Additional relief. The *building official* may seek legal or equitable relief to enjoin any acts or practices and abate any condition when necessary to achieve compliance.

103.10 Administrative review by the building official. Prior to issuance of the building permit, applicants may request administrative review by the *building official* of decisions or actions pertaining to the administration and enforcement of this code. Requests shall be addressed to the *building official*.

103.11 Administrative review by the Construction Codes Advisory Board. After administrative review by the *building official*, and prior to issuance of the building permit, applicants may request review of decisions or actions pertaining to the application and interpretation of this code by the Construction Codes Advisory Board, except for stop work orders, notices of violations, revocations of permits, and enforcement of Section 3107. The review will be performed by three or more members of the Construction Codes Advisory Board, chosen by the Board Chair. The Chair shall consider the subject of the review and members' expertise when selecting members to conduct a review. The decision of the review panel is advisory only; the final decision is made by the *building official*.

103.12 Recording of notices. The *building official* may record a copy of any order or notice with the Department of Records and Elections of King County.

103.13 Appeal to Superior Court. Final decisions of the Seattle Municipal Court on enforcement actions authorized by Title 22 and this code may be appealed pursuant to the Rules for Appeal of Decisions of Courts of Limited Jurisdiction.

DRAFT

SECTION 104
ORGANIZATION AND DUTIES

104.1 Jurisdiction of Department of Construction and Inspections. The Department of Construction and Inspections is authorized to administer and enforce this code. The Department of Construction and Inspections is under the administrative and operational control of the Director, who is the *building official*.

104.2 Designees. The *building official* may appoint such officers, inspectors, assistants and employees as are authorized from time to time. The *building official* may authorize such employees and other agents as may be necessary to carry out the functions of the *building official*.

104.3 Right of entry. With the consent of the owner or occupier of a building or premises, or pursuant to a lawfully issued warrant, the *building official* may enter a building or premises at any reasonable time to perform the duties imposed by this code.

104.4 Modifications. The *building official* may modify the requirements of this code for individual cases provided the *building official* finds: (1) there are practical difficulties involved in carrying out the provisions of this code; (2) the modification is in conformity with the intent and purpose of this code; and (3) the modification will provide a reasonable level of strength, effectiveness, fire resistance, durability, safety and sanitation when considered together with other safety features of the building or other relevant circumstances. The *building official* may, but is not required to, record the approval of modifications and any relevant information in the files of the *building official* or on the *approved construction documents*.

104.5 Alternate materials, methods of construction and design. This code does not prevent the *use* of any material, design or method of construction not specifically allowed or prohibited by this code, provided the alternate has been approved and its use authorized by the *building official*. The *building official* may approve an alternate, provided the *building official* finds that the proposed alternate complies with the provisions of this code and that the alternate, when considered together with other safety features of the building or other relevant circumstances, will provide at least an equivalent level of strength, effectiveness, fire resistance, durability, safety and sanitation. Certain code alternates have been pre-approved by the *building official* and are identified in this code as numbered code alternates. The *building official* may require that sufficient evidence or proof be submitted to reasonably substantiate any claims regarding the use or suitability of the alternate. The *building official* may, but is not required to, record the approval of code alternates and any relevant information in the files of the *building official* or on the *approved construction documents*.

104.6.1 Flood hazard areas. The *building official* shall not grant modifications to any provision required in flood hazard areas as established by Section 1612.3 unless a determination has been made that:

1. A showing of good and sufficient cause that the unique characteristics of the size, configuration or topography of the site render the elevation standards of Section 1612 inappropriate.
2. A determination that failure to grant the variance would result in exceptional hardship by rendering the lot undevelopable.
3. A determination that the granting of a variance will not result in increased flood heights, additional threats to public safety, extraordinary public expense, cause fraud on or victimization of the public, or conflict with existing laws or ordinances.
4. A determination that the variance is the minimum necessary to afford relief, considering the flood hazard.
5. Submission to the applicant of written notice specifying the difference between the design flood elevation and the elevation to which the building is to be built, stating that the cost of flood insurance will be commensurate with the increased risk resulting from the reduced floor elevation, and stating that construction below the design flood elevation increases risks to life and property.

104.7 Tests. Whenever there is insufficient evidence of compliance with any of the provisions of this code or evidence that any material or construction does not conform to the requirements of this code, the *building official* may require tests as proof of compliance to be made at no expense to the City. Test methods shall be specified by this code or by other recognized test standards. If there are no recognized and accepted test methods for the proposed alternate, the *building official* shall determine the test procedures. All tests shall be made by an *approved agency*. Reports of such tests shall be retained by the *building official* for the period required for retention of public records.

104.8 Rules of the building official. The *building official* has authority to issue interpretations of this code and to adopt and enforce rules and regulations supplemental to this code as may be deemed necessary in order to clarify the application of the provisions of this code. Such interpretations, rules and regulations shall be in conformity with the intent and purpose of this code.

104.8.1 Procedure. The *building official* shall promulgate, adopt and issue rules according to the procedures specified in the Administrative Code, Chapter 3.02 of the Seattle Municipal Code.

104.9 Liability. Nothing in this code is intended to be nor shall be construed to create or form the basis for any liability on the part of the City, or its officers, employees or agents, for any injury or damage resulting from the failure of a building to conform to the provisions of this code, or by reason or as a consequence of any inspection, notice, order, certificate, permission or approval authorized or issued or done in connection with the implementation or enforcement of this code, or by reason of any

DRAFT

action or inaction on the part of the City related in any manner to the enforcement of this code by its officers, employees or agents.

This code shall not be construed to relieve or lessen the responsibility of any *person* owning, operating or controlling any building or structure for any damages to *persons* or property caused by defects, nor shall the Department of Construction and Inspections or the City of Seattle be held to have assumed any such liability by reason of the inspections authorized by this code or any permits or certificates issued under this code.

104.10 Responsibilities of parties.

104.10.1 Responsibility for compliance. Compliance with the requirements of this code is the obligation of the owner of the building, structure, or premises, the duly authorized agent of the owner, and other *persons* responsible for the condition or work, and not of the City or any of its officers, employees or agents.

104.10.2 Responsibilities of registered design professional in responsible charge. It is the responsibility of the *registered design professional in responsible charge* to ensure that the information in the *construction documents* is complete, accurate, and, to the best of the design professional's knowledge, conforms to the requirements of this code.

104.10.3 Responsibilities of structural engineer in responsible charge. It is the responsibility of the *structural engineer in responsible charge* to:

1. Design the primary structure;

   Exception: A licensed engineer other than the *structural engineer in responsible charge* may design the primary structure of single-*story* metal buildings.
2. Specify design loads, configurations, controlling dimensions, deflection limits and/or other criteria necessary for the design of secondary structural components and sub-systems and the selection of *structurally qualified products*;
3. Determine the adequacy and conformance of the application of the *structurally qualified products* with the design intent of the City-approved *construction documents*;
4. Review for compatibility with the City-approved *construction documents* previously approved by the *building official*, the *deferred submittals* for the primary structural frame and the design and *deferred submittals* for *secondary members* for the following structural elements:

Wood trusses	Glu-lam beams
Steel joists	Structural steel
Steel decking	Prefabricated stair systems
Precast concrete piles	Post-tensioned floor systems
Curtain wall systems	Precast prestressed planks
Major skylight frames	Precast concrete/masonry wall panels

The *building official* may approve additions to, or deletions from this list for specific projects. If there is no *structural engineer in responsible charge* on the project, the architect in responsible charge shall assume these responsibilities.

Note: "Primary structural frame" and "*secondary member*" are defined in Chapter 2.

104.10.4 Responsibilities of contractor. It is the responsibility of the contractor to perform all the work in conformance with the City-approved *construction documents*.

104.10.5 Responsibilities of plans examiner. It is the responsibility of the plans examiner to verify that the description of the work in the *construction documents* is substantially complete, and to require corrections where, to the best of the plans examiner's knowledge, the *construction documents* do not conform to this code or other pertinent laws and ordinances.

104.10.6 Responsibilities of field inspector. It is the responsibility of the field inspector to conduct inspections to verify that the work in progress conforms with the *approved construction documents* and to require corrections where, to the best of the field inspector's knowledge, the work either does not conform to the *construction documents* or where the work is in violation of this code or other pertinent laws and ordinances.

SECTION 105
CONSTRUCTION CODES ADVISORY BOARD

105.1 Establishment. There is a "Construction Codes Advisory Board" ("Board") consisting of 13 voting members, appointed by the Mayor and subject to confirmation by the City Council. The Board membership consists of one representative of each of

DRAFT

the following professions or organizations. The representative of a profession need not be a member of the profession but may be a representative of an organization of such professionals.

1 architect;

1 structural engineer;

1 electrical engineer;

1 heating, refrigeration and air-conditioning engineer;

1 general contractor;

1 electrical contractor;

1 commercial building owner or operator;

1 apartment building owner or operator;

1 developer and/or contractor of residential projects;

1 member of organized labor; and

3 members of the general public.

A representative of each of the following departments shall be ex officio, non-voting members of the Board:

Seattle Fire Department;

Seattle City Light; and

Seattle-King County Department of Public Health.

105.2 Duties of Board. The Board shall act in an advisory capacity for all of its duties. The Board shall meet on call either by the *building official* or the Board Chair, subject to timely notice.

105.2.1 Code adoption and amendment. The Board may examine proposed new editions and amendments to the following codes and regulations listed in this section. The Board may make recommendations to the *building official* and to the City Council for adoption and amendment of these codes.

Seattle Building Code – Chapter 22.100 SMC*

Seattle Residential Code – Chapter 22.150 SMC

Seattle Mechanical Code – Chapter 22.400 SMC

Seattle Fuel Gas Code – Chapter 22.420 SMC

Seattle Boiler Code – Chapter 22.450 SMC

Seattle Energy Code – Chapter 22.700 SMC

Seattle Electrical Code – Chapter 22.300 SMC

Seattle Plumbing Code – SMC Title 22 Subtitle V

* SMC is the Seattle Municipal Code.

105.2.2 Review of director's rules. The Board may examine proposed administrative rules relating to the codes and regulations listed above and make recommendations to the *building official*.

105.3 Organization. The Board shall organize, and elect a chair and any other officers as may be established by the Board. The Board may adopt rules of procedure. There shall be a committee of the Board for each code assigned to its review. Committees shall consist of Board members and may include additional members such as other representatives of the general public and professions not specifically represented on the Board. Any non-Board members of committees shall be appointed by the Chair. The Chair may, from time to time, appoint special topic subcommittees.

105.4 Terms of service. Terms of Board members are three years, dating from the day of expiration of the preceding term; provided, a member whose term has expired shall continue to serve until a successor is appointed and confirmed. Terms on the Board shall be staggered so that the terms of not more than five positions expire concurrently. Vacancies shall be filled for any unexpired term in the same manner as the original appointment.

105.5 Removal of Board member. A member may be removed by the Mayor, subject to a majority vote of members of the City Council.

105.6 Compensation of Board members. No member shall receive any compensation for service on the Board.

DRAFT

SECTION 106
BUILDING PERMITS

106.1 Permits required. Except as otherwise specifically provided in this code, a building permit shall be obtained from the *building official* for each building or structure prior to erecting, constructing, enlarging, altering, repairing, moving, improving, removing, changing the occupancy of, or demolishing such building or structure, or allowing the same to be done. All work shall comply with this code, even where no permit is required.

106.2 Work exempt from permit. A building permit is not required for the work listed below. Exemption from the permit requirements of this code does not authorize any work to be done in any manner in violation of this code or any other laws or ordinances of the City.

1. Minor repairs or alterations if the value of construction, as determined by the *building official*, is $6,000 or less in any six month period. Such repairs and alterations shall not include the removal, reduction, alteration, or relocation of any load-bearing support. Egress, light, ventilation, and fire-resistance shall not be reduced without a permit.
2. Minor work including the following, provided no changes are made to the building envelope: patio and concrete slabs on grade, painting or cleaning a building, repointing a chimney, installing kitchen cabinets, paneling or other surface finishes over existing wall and ceiling systems applied in accordance with Chapter 8, insulating *existing buildings*, abatement of hazardous materials, demolition of nonstructural interior tenant improvements in retail and office uses, and in-kind or similar replacement of or repair of deteriorated members of a structure.
3. One-*story* detached accessory buildings used for greenhouse, tool or storage shed, playhouse, or similar uses, if:
   - 3.1 The projected roof area does not exceed 120 square feet; and
   - 3.2 The building is not placed on a concrete foundation other than a slab on grade.
4. Fences not over 8 feet high that do not have masonry or concrete elements above 6 feet.
5. Arbors and other open-framed landscape structures not exceeding 120 square feet in projected area.
6. Display cases, cabinets, counters and partitions not over 5 feet 9 inches high.
7. Retaining walls and rockeries which are not over 4 feet in height measured from the bottom of the footing to the top of the wall, if:
   - 7.1 There is no surcharge or impoundment of Class I, II or III-A liquids.
   - 7.2 The wall or rockery is not located in an Environmentally Critical Area (ECA) or ECA buffer pursuant to chapter 25.09 of the Seattle Municipal Code;
   - 7.3 Construction does not support soils in a steep slope area, potential landslide area or known slide area as identified in the Seattle Environmentally Critical Areas Ordinance Section 25.09.020 of the Seattle Municipal Code.
   - 7.4 Possible failure would likely cause no damage to adjoining property or structures.
8. Platforms, walks and driveways not more than 18 inches above grade and not over any basement or *story* below.
9. Temporary motion picture, television and theater stage sets and scenery.
10. Window *awnings* supported by an exterior wall of Group R-3, and Group U occupancies when projecting not more than 54 inches.
11. Prefabricated swimming pools, spas and similar equipment accessory to a Group R-3 occupancy in which the pool walls are entirely above the adjacent grade and if the capacity does not exceed 5,000 gallons.
12. Replacement of siding. This shall not include structural changes, replacement of sheathing or alterations to doors and windows. See Energy Code Sections ((~~R101.4.3, and C101.4.3~~)) R503.1.1, Exceptions 2 and 3 and C503.1, Exceptions 3 and 4, for requirements for *existing buildings*.
13. Roof recover.
14. Roof replacement under either of the following conditions:
    - 14.1 In one- and two-family *dwellings* and townhouses if no changes are made to the building envelope other than adding or replacing insulation, and the insulation value is equivalent to or better than the *existing structure*; or
    - 14.2 Where less than 500 square feet of roof sheathing or insulation is exposed within any 6 month period. Permits are required for structural changes and replacement of sheathing of any size. See Energy Code Sections ((~~R101.4.3, and C101.4.3~~)) R503.1.1, C503.1 and C503.3 for insulation requirements for *existing buildings*.
15. School, park or private playground equipment including tree houses.
16. Removal and/or replacement of underground storage tanks that are subject to regulation by a state or federal agency.

Note: A Fire Department permit is required for removal, replacement and decommissioning of underground storage tanks.

DRAFT

17. Installation of dish and panel antennas 6.56 feet (2 m) or less in diameter or diagonal measurement.
18. Water tanks not located in Environmentally Critical Areas that are supported directly on grade if the capacity is not greater than 5,000 gallons (18 925 L) and the ratio of height to diameter or width is not greater than 2:1.

106.3 Other permits required. Unless otherwise exempted by this or other pertinent codes, separate master use, plumbing, electrical, mechanical and other permits may be required for the above exempted items.

106.4 Flood hazard areas. In addition to the permit required by this section, all work to be performed in areas of special flood hazard, as defined in Seattle Municipal Code Chapter 25.06, are subject to additional standards and requirements, including floodplain development approval or a Floodplain Development License, as set forth in Chapter 25.06, the Seattle Floodplain Development Ordinance.

106.4.1 Determination of substantially improved or substantially damaged existing buildings and structures in flood hazard areas. For applications for reconstruction, rehabilitation, *repair*, *alteration*, *addition* or other improvement of *existing buildings* or structures located in *flood hazard areas*, the *building official* shall determine if the proposed work constitutes *substantial improvement* or *repair* of *substantial damage*. Where the *building official* determines that the proposed work constitutes *substantial improvement* or *repair* of *substantial damage*, and where required by this code, the *building official* shall require the building to meet the requirements of Section 1612.

106.5 Application for permit. To obtain a permit, the applicant shall first file an application a format determined by the *building official*. Every such application shall:

1. Identify and describe the work to be covered by the permit for which application is made.
2. Describe the land on which the proposed work is to be done by legal description, property address or similar description that will readily identify and definitely locate the proposed building or work.
3. Provide contractor's business name, address, phone number and current contractor registration number (required if contractor has been selected).
4. Be accompanied by *construction documents*, including plans and other data as required in Section 106.5.2 through 106.5.7.
5. State the valuation of any new building or structure or any addition, remodeling or alteration to an *existing building* including cost breakdown between additions and alterations.
6. Be signed by the owner of the property or building, or the owner's authorized agent, who may be required to submit evidence to indicate such authority.
7. Give such other data and information as may be required by the *building official*, including, but not limited to, master use and shoreline permits and building identification plans.
8. State the name of the owner and contractor and the name, address and phone number, of a contact *person*.
9. Substantially conform with applicable city law in effect on the date described in Section 101.3, as modified by any exception.
10. Applications that include a grading component shall include all information prescribed by the Grading Code and rules adopted thereunder, and all additional information required by the *building official* pursuant to the Grading Code and rules adopted thereunder.

106.5.1 Construction documents. *Construction documents* shall be submitted in two or more sets with each application for a permit, or shall be submitted in electronic format determined by the *building official*. Computations, stress diagrams, shop and fabrication drawings and other data sufficient to show the adequacy of the plans shall be submitted when required by the *building official*.

Exception: The *building official* may waive the submission of *construction documents*, if the *building official* finds that the nature of the work applied for is such that reviewing of *construction documents* is not necessary to obtain compliance with this code.

106.5.2 Preparation by registered design professionals. *Construction documents* for all work shall be prepared and designed by or under the direct supervision of an architect or structural engineer licensed to practice under the laws of the State of Washington. Each sheet of *construction documents* shall bear the seal and the signature of the registered design professional before the permit is issued.

Exceptions:

1. *Construction documents* for work not involving structural design are permitted to be prepared by a registered professional engineer or registered architect qualified in the proposed work.
2. When authorized by the *building official*, *construction documents* for assembly line products or designed specialty structural products may be designed by a registered professional engineer.

DRAFT

3. When authorized by the *building official*, *construction documents* need not be prepared by an engineer or architect licensed by the State of Washington for the following:
   3.1. Detached one- and two-family *dwellings*.
   3.2 New buildings or structures, and additions, alterations or repairs made to them of conventional light frame construction, if the value of construction, as determined by the *building official*, is less than $75,000.
   3.3. Nonstructural alterations and repairs if the value of construction, as determined by the *building official*, is less than $75,000, excluding the value of electrical and mechanical systems, fixtures, equipment, interior finish and millwork.
   3.4. Other work as specified in rules promulgated by the *building official*.

106.5.3 Design professional in responsible charge. The *building official* is authorized to require the owner to engage and designate on the building permit application a registered design professional who shall act as the registered design professional in responsible charge. If the circumstances require, the owner shall designate a substitute registered design professional in responsible charge who shall perform the duties required of the original registered design professional in responsible charge. The *building official* shall be notified in writing by the owner if the registered design professional in responsible charge is changed or is unable to continue to perform the duties. The registered design professional in responsible charge is responsible for reviewing and coordinating submittal documents prepared by others, including phased and *deferred submittal* items, for compatibility with the design of the building.

106.5.4 Information required on construction documents. *Construction documents* shall include the following, as applicable:

1. A plot plan showing the width of streets, alleys, yards and courts.
2. The location (and/or location within a building), floor area, *story*, height, type of construction and occupancy classification as defined by the Building Code and use as defined by the *Land Use Code* of the proposed building and of every *existing building* on the property.
3. Where there are more than two buildings located on a property, a building identification plan identifying the location of each building on the property and identifying each building by a numbering system unrelated to address. Such plan is not required where a plan for the site is already on file and no new buildings are being added to the site.
4. Types of heating and air conditioning systems.
5. Architectural plans, including floor plans, elevations and door and finish schedules showing location of all doors, windows, mechanical equipment, shafts, pipes, vents and ducts. *Fire walls*, fire barriers, fire partitions, smoke barriers and smoke partitions or any other wall or horizontal assembly required to have protected openings or penetrations shall be identified on the architectural plans.
6. Structural plans, including foundation plan and framing plans.
7. Cross-sections and construction details for both architectural and structural plans including wall sections, foundation, floor and roof details, connections of structural members and types of construction material.
8. Topographic plans, including original and final contours, location of all buildings and structures on the site and, when required by the *building official*, adjacent to the site, and cubic yards of cut and fill.
9. If the *building official* has reason to believe that there may be an intrusion into required open areas or over the property line, a survey of the property prepared by a land surveyor licensed by the State of Washington is required for new construction, and for additions or accessory buildings.
10. If any building or structure is to be erected or constructed on property abutting an unimproved or partially improved street or alley, the plans shall also include a profile showing the established or proposed grade of the street or alley, based upon information obtained from the Director of Transportation relating to the proposed finished elevations of the property and improvements thereon.
11. Where design flood elevations are not specified, they shall be established in accordance with Section 1612.3.1.

106.5.5 Information on first sheet. The first or general note sheet of each set of plans shall specify the following, as applicable:

1. The building and street address of the work.
2. The name and address of the owner and *person* who prepared the plans.
3. Legal description of the property.
4. Type of occupancy of all parts of the building(s) as defined in this code, including notation of fixed fire protection devices or systems.

DRAFT

5. Zoning classification of the property and existing and proposed uses of the structure(s) as defined in the *Land Use Code*.
6. Indication of location within the *fire district* as defined in this code, if applicable.
7. Type of construction as defined in this code.
8. Number of *stories* and basements as defined in this code.
9. Variances, conditional uses, special exceptions, including project numbers, approval and approval extension dates.
10. Where applicable, a description of the design selected and approved at a Section 403 high-rise building pre-design conference, a Section 404 atrium pre-design conference, a Section 414.1.4 hazardous occupancy pre-design conference, a Section 1613.1.1 seismic design pre-design conference or a similar conference on a building subject to Fire Code Chapter 93.

106.5.6 Structural notes. Plans shall include applicable information including, but not limited to, the following:

1. Design loads: Snow load, live loads and lateral loads. If required by the *building official*, the structural notes for plans engineered to ASCE 7 shall include the factors of the base shear formula used in the design;
2. Foundations: Foundation investigations, allowable bearing pressure for spread footings, allowable load capacity of piles, lateral earth pressure;
3. Masonry: Type and strength of units, strength or proportions of mortar and grout, type and strength of reinforcement, method of testing, design strength;
4. Wood: Species or species groups, and grades of sawn lumber, glued-laminated lumber, plywood and assemblies, type of fasteners;
5. Concrete: Design strengths, mix designs, type and strength of reinforcing steel, welding of reinforcing steel, restrictions, if any;
6. Steel and aluminum: Specification types, grades and strengths, welding electrode types and strengths.

In lieu of detailed structural notes the *building official* may approve minor references on the plans to a specific section or part of this code or other ordinances or laws.

106.5.7 Fire-resistive notes. The *building official* may require that plans for buildings more than two *stories* in height of other than Groups R-3 and U occupancies indicate how required structural and fire-resistive integrity will be maintained where a penetration will be made for electrical, mechanical, plumbing and communication conduits, pipes and similar systems.

The *building official* may require that, when required for fire-resistive construction, the method of installation of wall and ceiling coverings and the protection of structural parts be specified on the plans unless the listing that documents the rating specifies a method no more restrictive than the minimum standards of Chapter 7.

106.5.8 Deferred submittals. Deferral of any submittal items shall have the prior approval of the *building official*. The registered design professional in responsible charge shall list *deferred submittals* on the plans for review by the *building official*.

Documents for *deferred submittal* items shall be submitted to the registered design professional in responsible charge who shall review them and forward them to the *building official* with a notation indicating that the *deferred submittal* documents have been reviewed and been found to be in general conformance to the design of the building. The *deferred submittal* items shall not be installed until the *deferred submittal* documents have been approved by the *building official*.

106.5.9 Construction and demolition waste. The information in Sections 106.5.9.1 and 106.5.9.2 shall be submitted for projects generating construction or demolition material for salvage, recycling or disposal.

Exception: Projects for which an emergency order or hazard correction order has been issued pursuant to Section 102.

106.5.9.1 Application submittal requirements. The following information shall be provided at the time of application for *building alterations* and the demolition of *existing buildings* having a work area greater than 750 square feet or a project value greater than $75,000, whichever is more restrictive:

1. A salvage assessment completed by an *approved agency* identifying building components having potential to be salvaged prior to building removal. The building owner is permitted to complete the assessment for building alterations that include some demolition.
2. A statement of compliance with the regulations of the Puget Sound Clean Air Agency regarding asbestos identification, notification and abatement.

106.5.9.2 Waste Diversion Report. A Waste Diversion Report shall be submitted within 60 days of final inspection approval. The Waste Diversion Report shall identify the weight or volume of project-generated construction waste and demolition material, the hauler of the material, and the receiving facility or location for each commodity. A signed affida-

DRAFT

vit from the receiving party and photo documentation shall be included for salvaged materials for which a tip receipt cannot be obtained.

106.5.10 Clarity of plans. Plans shall be drawn to a clearly indicated and commonly accepted scale in a format determined by the *building official*.

106.6 Application review and permit issuance. The *construction documents* shall be reviewed by the *building official*. Such *construction documents* may be reviewed by other departments of the City to check compliance with the laws and ordinances under their jurisdiction.

106.6.1 Determination of completeness. Within 28 days after an application is filed, the *building official* shall notify the applicant in writing either that the application is complete or that it is not complete, and if not complete, what additional information is required to make it complete. Within 14 days after receiving the additional information, the *building official* shall notify the applicant in writing whether the application is now complete or what additional information is necessary. An application shall be deemed to be complete if the *building official* does not notify the applicant in writing by the deadlines in this section that the application is incomplete.

106.6.2 Decision on application. Except as provided in Section 106.6.8, the *building official* shall approve, condition or deny the application within 120 days after the *building official* notifies the applicant that the application is complete.

To determine the number of days that have elapsed after the notification that the application is complete, the following periods shall be excluded:

1. All periods of time during which the applicant has been requested by the Director to correct plans, perform required studies, or provide additional required information, until the determination that the request has been satisfied. The period shall be calculated from the date the *building official* notifies the applicant of the need for additional information until the earlier of the date the *building official* determines whether the additional information satisfies the request for information or 14 days after the date the information has been provided to the *building official*.
2. If the *building official* determines that the information submitted by the applicant under item 1 of this subsection is insufficient, the *building official* shall notify the applicant of the deficiencies, and the procedures under item 1 of this subsection shall apply as if a new request for information had been made;
3. All extensions of time mutually agreed upon by the applicant and the *building official*.

If a project permit application is substantially revised by the applicant, the time period shall start from the date at which the revised project application is determined to be complete under Section 101.3.1.

106.6.3 Issuance of permit.

106.6.3.1. Subject to Section 106.6.3.2, the *building official* shall issue a permit to the applicant if the *building official* finds the following:

1. The work described in the *construction documents* conforms to the requirements of this code and other pertinent laws, ordinances, and regulations and with all conditions imposed under any of them,
2. The fees specified in the *Fee Subtitle* have been paid, and
3. The applicant has complied with all requirements to be performed prior to issuance of a permit for the work under other pertinent laws, ordinances or regulations or included in a master use permit, or otherwise imposed by the *building official*.

When the permit is issued, the applicant or the applicant's authorized agent becomes the permit holder.

106.6.3.2 The *building official* shall not issue a permit if the *building official* has determined that the property owner violated subsection 22.210.136.A of the Seattle Municipal Code and the owner has not obtained any required tenant relocation license.

106.6.4 Phased permits.

1. The *building official* may authorize construction of a portion or portions of a building or structure before complete *construction documents* for the whole building or structure have been submitted or *approved*, or before the applicant has complied with all conditions of a building permit for the entire building or structure under the *Land Use Code* or master use permit. The entire proposed project shall comply with applicable city law in effect on the date set forth in Section 101.3.

   The applicant shall proceed at the applicant's risk without assurance that a permit for the entire building or structure will be granted.
2. After approval of a Master Use Permit as required by the *Land Use Code*, if the applicant has satisfied all applicable requirements for issuance of a grading permit under the Grading Code and rules adopted thereunder, a permit for excavation, shoring and other *land-disturbing activity* may be issued.

DRAFT

106.6.5 Grading permits. The grading component of the building permit is the portion of the building permit that authorizes work that is subject to the requirements of the Grading Code. That component constitutes a grading permit.

106.6.6 Permit conditions and denial. The *building official* may impose on a permit any conditions authorized by this code or other pertinent ordinances or regulations, including but not limited to the Grading Code, the Stormwater Code, Regulations for Environmentally Critical Areas, and rules adopted pursuant to those codes. In addition, the *building official* may condition a permit in order to reduce the risks associated with development, construction, ownership and occupancy including, but not limited to risks in potential slide areas. The *building official* may deny a permit if the *building official* determines that the risks cannot be reduced to an acceptable level, that the proposed project or *construction documents* do not conform to the requirements of this code or other pertinent laws, ordinances or regulations, or to requirements included in the Master Use Permit or requirements otherwise imposed by the *building official* or other City departments, or that the applicant has failed to comply with any requirement or condition imposed pursuant to the authority described above.

106.6.7 Compliance with approved construction documents. When the *building official* issues a permit, the *building official* shall endorse the permit in writing or in electronic format, and stamp the plans APPROVED. Such *approved* plans and permit shall not be changed, modified or altered without authorization from the *building official*, and all work shall be done in accordance with the *approved construction documents* and permit except as authorized by the *building official* during a field inspection to correct errors or omissions or as authorized by Section 106.6.8.

106.6.8 Revisions to the permit. When changes to the *approved* work are made during construction, approval of the *building official* shall be obtained prior to execution. The building inspector may approve minor changes to the *construction documents* for work not reducing the structural strength or fire and life safety of the structure. The building inspector shall determine if it is necessary to revise the *approved construction documents*. No changes that are subject to special inspection required by Section 1704 shall be made during construction unless approved by the *building official*. If revised plans are required, changes shall be submitted to and approved by the *building official*, accompanied by fees specified in the *Fee Subtitle* prior to occupancy. All changes shall conform to the requirements of this code and other pertinent laws and ordinances and other issued permits.

106.6.9 Cancellation of permit applications. Applications may be cancelled if no permit is issued by the earlier of the following: (1) twelve months following the date of application; or (2) sixty days from the date of written notice that the permit is ready to issue. After cancellation, *construction documents* submitted for review may be returned to the applicant or destroyed by the *building official*.

The *building official* will notify the applicant in writing at least thirty days before the application is cancelled. The notice shall specify a date by which a request for extension must be submitted in order to avoid cancellation. The date shall be at least two weeks prior to the date on which the application will be cancelled.

106.6.10 Extensions prior to permit issuance. At the discretion of the *building official*, applications for projects that require more than 12 months to review and approve may be extended for a period that provides reasonable time to complete the review and approval, but in no case longer than 24 months from the date of the original application. No application may be extended more than once. After cancellation, the applicant shall submit a new application and pay a new fee to restart the permit process.

Notwithstanding other provisions of this code, applications may be extended where issuance of the permit is delayed by litigation, preparation of environmental impact statements, appeals, strikes or other causes related to the application that are beyond the applicant's control, or while the applicant is making progress toward issuance of a master use permit.

106.7 Retention of plans. One set of *approved* plans, which may be on microfilm or in electronic format, shall be retained by the *building official*. One set of *approved* plans shall be returned to the applicant and shall be kept at the site of the building or work for use by inspection personnel at all times during which the work authorized is in progress.

106.8 Validity of permit. The issuance or granting of a permit or approval of *construction documents* shall:

1. Not be construed to be a permit for, or an approval of, any violation of any of the provisions of this code or other pertinent laws and ordinances;
2. Not prevent the *building official* from requiring the correction of errors in the *construction documents* or from preventing building operations being carried on thereunder when in violation of this code or of other pertinent laws and ordinances of the City;
3. Not prevent the *building official* from requiring correction of conditions found to be in violation of this code or other pertinent laws and ordinances of the City; or
4. Not be construed to extend the period of time for which any such permit is issued or otherwise affect any period of time for compliance specified in any notice or order issued by the *building official* or other administrative authority requiring the correction of any such conditions.

DRAFT

106.9 Expiration of permits. Authority to do the work authorized by a permit expires 18 months from the date of issuance. An *approved* renewal extends the life of a permit for an additional 18 months from the prior expiration date. An *approved* reestablishment extends the life of the permit for 18 months from the date the permit expired.

Exceptions:

1. Initial permits for major construction projects that require more than 18 months to complete may be issued for a period that provides reasonable time to complete the work, according to an *approved* construction schedule. The *building official* may authorize a permit expiration date not to exceed three years from the date of issuance, except when there is an associated Shoreline Substantial Development permit in which case the *building official* may authorize an expiration date not to exceed the life of the Shoreline permit.
2. The *building official* may issue permits which expire in less than eighteen months if the *building official* determines a shorter period is appropriate to complete the work.

This section is subject to the limitations in Seattle Municipal Code Section 22.800.100, Stormwater Code.

106.10 Renewal of permits. Permits may be renewed and renewed permits may be further renewed by the *building official* if the following conditions are met:

1. Application for renewal is made within the 30 day period immediately preceding the date of expiration of the permit; and
2. If the project has had an associated discretionary Land Use review, the land use approval has not expired; and
3. If an application for renewal is made more than 18 months after the date of mandatory compliance with a new or revised edition of the Seattle Building Code, the permit shall not be renewed unless:

   3.1 The *building official* determines that the permit complies, or is modified to comply, with the Seattle Building, Mechanical, Fuel Gas, Energy, Stormwater, Side Sewer and Grading codes in effect on the date of application for renewal; or

   3.2 The work authorized by the permit is substantially underway and progressing at a rate approved by the *building official*. "Substantially underway" means that normally required building inspections have been *approved* for work such as foundations, framing, mechanical, insulation and finish work that is being completed on a continuing basis; or

   3.3. Commencement or completion of the work authorized by the permit is delayed by litigation, appeals, strikes or other extraordinary circumstances related to the work authorized by the permit, beyond the permit holder's control, subject to approval by the *building official*; and
4. If an application for renewal is made on or after January 1, 2017, the permit shall not be renewed unless: (a) the *building official* determines that the permit complies, or is modified to comply, with the Seattle Stormwater Code in effect on the date of application for renewal; or (b) construction has started. For purposes of this provision, "started construction" means the site work associated with and directly related to the *approved* project has begun. For example, grading the project site to final grade or utility installation constitutes the start of construction; simply clearing the project site does not.

106.11 Reestablishment of expired permits. A new permit is required to complete work if a permit has expired and was not renewed.

Exception: A permit that expired less than one year prior to the date of a request for reestablishment may be reestablished upon approval of the *building official* if it complies with Section 106.10, Items 2, 3, and 4 above. Once re-established the permit will not be considered to have expired. The new expiration date of a reestablished permit shall be determined in accordance with Section 106.9.

106.12 Revocation of building permits. Whenever the *building official* determines there are grounds for revoking a permit, the *building official* may issue a notice of revocation. The notice of revocation shall identify the reason for the proposed revocation, including but not limited to, the violations, the conditions violated, and any alleged false or misleading information provided.

106.12.1 Standards for revocation. The *building official* may revoke a permit if:

1. The code or the building permit has been or is being violated and issuance of a notice of violation or stop work order has been or would be ineffective to secure compliance because of circumstances related to the violation; or
2. The permit was obtained with false or misleading information.

106.12.2 Service of notice of revocation. The notice of revocation shall be served upon the owner, agent or other responsible *person* by personal service or regular first class mail addressed to the last known address of such *person* or if no address is available after reasonable inquiry, the notice may be posted in a conspicuous place on the premises. The notice may also be posted if served by personal service or first class mail.

106.12.3 Effective date of revocation. The *building official* shall identify in the notice of revocation a date certain on which the revocation will take effect. This date may be stayed pending complete review by the *building official* pursuant to Section 106.12.4.

DRAFT

106.12.4 Review by the building official for notice of revocation. Any *person* aggrieved by a notice of revocation may obtain a review by making a request in writing to the *building official* within three business days of the date of service of the notice of revocation. The review shall occur within five business days after receipt by the *building official* of the request for review. Any *person* affected by the notice of revocation may submit additional information to the *building official* for consideration as part of the review at any time prior to the review.

106.12.4.1 Review procedure. The review will be made by a representative of the *building official* who will review all additional information received and may also request a site visit. After the review, the *building official* may:

1. Sustain the notice of revocation and affirm or modify the date the revocation will take effect;
2. Withdraw the notice of revocation;
3. Modify the notice of revocation and affirm or modify the date the revocation will take effect; or
4. Continue the review to a date certain.

106.12.4.2 Order of revocation of permit. The *building official* shall issue an order containing the decision within ten days after the review is completed and shall cause the same to be sent by regular first class mail to the *person* or *persons* requesting the review, any other *person* on whom the notice of revocation was served and any other *person* who requested a copy before issuance of the order. The order of the *building official* is the final order of the City, and the City and all parties shall be bound by the order.

106.13 Permits for temporary structures.

106.13.1 Tents and similar facilities used for 18 months or less. The *building official* may issue a permit to erect and maintain a tent or other similar temporary structure to be used for religious services, conventions, circuses, carnivals, fairs, special sales or similar uses for a period not to exceed eighteen months.

Exceptions:

1. Authority to issue permits is vested with the Fire Department for temporary tents and *canopies* meeting all of the following conditions:
   - 1.1. The permit is for less than four weeks;
   - 1.2. The temporary structure will be located 200 feet or more from shorelines;
   - 1.3. No stage, platform, bleacher or similar structure greater than 4 feet in height will be installed inside any temporary structure;
   - 1.4. No temporary structure will be attached to a building or other permanent structure for support;
   - 1.5. The temporary structure is not proposed to be used during severe weather, and
   - 1.6 The temporary structure is not of unusual shape, unusual location or large area or height.

Note: The Land Use and Fire codes may impose additional restrictions or conditions on tents and temporary structures.

106.13.1.1 Renewal. Permits issued pursuant to Section 106.13.1 are not renewable.

106.13.1.2 Subsequent permits. If the occupant load of the structure is 100 or more and is issued for less than 4 weeks, no more than one permit per tent vendor for each event shall be issued in any three-month period.

106.13.1.3 Removal. Such structures shall be removed before the expiration of the permit.

106.13.1.4 Requirements for tents and similar structures. The structure shall be subject to such reasonable safeguards for *persons* and property as the *building official* prescribes. The nature and extent of fire-extinguishing equipment and decorations shall be subject to the requirements of the fire chief, and the sanitary facilities shall meet the requirements of the Director of Public Health.

106.13.1.5 Cash deposit or bond. The *building official* may require that removal of the structure be guaranteed by a cash deposit with the *building official* or by a surety bond, the amount of which, in either case, shall be fixed by the *building official*. The cash deposit or bond shall also be conditioned so that, if the occupant or owner fails to conform to any of the requirements of the City related to the erection, maintenance or removal of the tent or other structure, the *building official* may enter the premises and take steps necessary to make the structure conform to the requirements. The City shall be permitted to recover the cost thereof from the cash deposit or bond.

106.13.2 Temporary structures. Temporary structures such as reviewing stands and other structures conforming to the requirements of this code, and sheds, *canopies*, or fences used for the protection of the public around and in conjunction with construction work may be erected by special permit from the *building official* for a limited period of time. The building or structure shall be subject to the bonding, removal and safety provisions of Section 106.13.1.5.

DRAFT

106.13.3 Temporary structures in the right-of-way. Temporary buildings or structures in the right-of-way are regulated by the Director of Transportation.

106.13.4 Temporary commercial coaches and modular homes. The *building official* may issue permits for eighteen months for the installation of commercial coaches and modular homes as temporary offices or other uses as may be determined by the *building official*, subject to the following:

1. Commercial coach shall be identified by a State of Washington black sticker located by the door. The structure may be placed on a temporary foundation and shall be anchored to resist wind and seismic lateral forces.
2. Modular homes shall be identified by a State of Washington gold sticker located by the door. Modular homes shall be permitted only if no heavy storage is anticipated for the temporary office use. The structure may be placed on a temporary foundation and shall be anchored to resist wind and seismic lateral forces.
3. A plot plan shall be submitted to verify compliance with the *Land Use Code* and to check exposure to other buildings.
4. The proposed use must be permitted outright under the *Land Use Code* and comply with all other pertinent laws and ordinances.
5. Construction offices, dry shacks and similar temporary buildings are regulated by Section 106.13.5.

106.13.4.1 Renewal of temporary commercial coach and modular home permits. A subsequent permit for another 18 months may be issued at the end of each 18 month period if the *building official* determines that the commercial coach or modular home complies with this section.

106.13.5 Construction buildings. The *building official* may issue a permit to erect and maintain construction offices, dry shacks and similar temporary buildings, including material and equipment storage, for the purpose of constructing an improvement.

Exception: A temporary permit is not required for construction offices and similar temporary buildings located on the same premises for which a construction permit has been issued.

106.13.5.1 Removal of construction buildings. Such structures shall be removed within 14 days after the end of the temporary permit's term. Removal shall be guaranteed by a cash deposit with the *building official* or by a surety bond, the amount of which, in either case, shall be fixed by the *building official*.

106.13.5.2 Requirements for construction buildings. The construction of the structure shall be subject to reasonable safeguards for *persons* and property as the *building official* shall prescribe; the nature and extent of fire-extinguishing equipment shall be subject to the requirements of the fire chief, and the sanitary facilities shall meet the requirements of the Director of Public Health.

106.13.5.3 Cash deposit or bond. The *building official* may require that removal of the structure be guaranteed by a cash deposit with the *building official* or by a surety bond, the amount of which, in either case, shall be fixed by the *building official*. The cash deposit or bond shall be conditioned so that, if the occupant or owner fails to conform to any of the requirements of the City related to the erection, maintenance or removal of the tent or other structure, the *building official* may enter the premises and take steps necessary to make the structure conform to the requirements. The City shall be permitted to recover the cost thereof from the cash deposit or bond.

DRAFT

SECTION 107
FLOOR AND ROOF DESIGN LOADS

107.1 Live loads posted. Where the live loads for which each floor or portion thereof of a commercial or industrial building is or has been designed to exceed 125 pounds per square foot and for all warehouse and storage areas, such design live loads shall be conspicuously posted by the owner or the owner's authorized agent in that part of each *story* in which they apply, using durable signs. It shall be unlawful to remove or deface such notices.

107.2 Issuance of certificate of occupancy. A certificate of occupancy required by Section 109 shall not be issued until the floor load signs, required by Section 107.1, have been installed.

107.3 Restrictions on loading. It shall be unlawful to place, or cause or permit to be placed, on any floor or roof of a building, structure or portion thereof, a load greater than is permitted by this code.

SECTION 108
INSPECTIONS

108.1 General. All construction or work for which a permit is required is subject to inspection by the *building official*, and certain types of construction shall have special inspections by registered special inspectors as specified in Chapter 17.

108.2 Surveys. A survey of the lot may be required by the *building official* to verify compliance of the structure with *approved construction documents*.

108.3 Preconstruction conferences. When required by the *building official*, the owner or the owner's agent shall arrange a conference with the project contractor, the design team, the special inspection agency if special inspection is required, and the *building official* prior to commencing work on any portion of construction. The intent of the conference is to identify and clarify unusual inspection requirements of the project. See Section 1703.7 for preconstruction conferences for projects requiring special inspection.

108.4 Inspection requests. The owner of the property or the owner's authorized agent, or the *person* designated by the owner or agent to do the work authorized by a permit shall notify the *building official* that work requiring inspection as specified in this section and Chapter 17 is ready for inspection.

108.5 Access for inspection. The permit holder and the *person* requesting any inspections required by this code shall provide access to and means for proper inspection of such work, including safety equipment required by Washington Industrial Safety and Health Agency. The work shall remain accessible and exposed for inspection purposes until approved by the *building official*. Neither the *building official* nor the City shall be liable for expense entailed in the required removal or replacement of any material to allow inspection.

108.6 Inspection record. Work requiring a permit shall not be commenced until the permit holder or the permit holder's agent has posted an inspection record in a conspicuous place on the premises and in a position that allows the *building official* to conveniently make the required entries regarding inspection of the work. This record shall be maintained in such a position by the permit holder or the permit holder's agent until final approval has been granted by the *building official*.

108.7 Approvals required. No work shall be done on any part of the building or structure beyond the point indicated in each successive inspection without first obtaining the written approval of the *building official*. Written approval shall be given only after an inspection has been made of each successive step in the construction as indicated by each of the inspections required in Section 108.9. There shall be a final inspection and approval of all buildings when completed and ready for occupancy.

108.7.1 Effect of approval. Approval as a result of an inspection is not an approval of any violation of the provisions of this code or of other pertinent laws and ordinances of the City. Inspections presuming to give authority to violate or cancel the provisions of this code or of other pertinent laws and ordinances of the City are not valid.

108.8 Concealment of work. No required reinforcing steel or structural framework of any part of any building or structure shall be covered or concealed in any manner whatsoever without first obtaining the approval of the *building official*. Protection of joints and penetrations in fire-resistance-rated assemblies, smoke barriers and smoke partitions shall not be concealed from view until inspected and *approved*.

Exception: Modular homes and commercial coaches identified by State of Washington stickers as specified in Section 106.13.4 and placed upon a permanent foundation approved and inspected by the *building official*.

108.9 Required inspections. The *building official*, upon notification by the permit holder or the permit holder's agent, of the property address and permit number, shall make the following inspections and shall either approve that portion of the construction as completed or shall notify the permit holder or the permit holder's agent if the construction fails to comply with the law.

108.9.1 First ground disturbance inspection. To be made prior to beginning *land-disturbing activity*, and following installation of erosion control measures and any required fencing that may restrict land disturbance in steep slope or other buffers as defined in Seattle Municipal Code Chapter 25.09.

Note: The purpose of the site inspection is to verify the erosion control method, location and proper installation. *Approved* drainage plan requirements and site plan conditions will also be verified, including buffer delineations.

108.9.2 Foundation inspection. To be made after trenches are excavated and forms erected and when all materials for the foundation are delivered on the job. Where concrete from a central mixing plant (commonly termed "ready mix") is to be used, materials need not be on the job.

108.9.3 Concrete slab or under-floor inspection. To be made after all in-slab or under-floor building service equipment, conduit, piping accessories and other ancillary equipment items are in place but before any concrete is poured or floor sheathing installed, including the subfloor.

108.9.4 Lowest floor elevation. In flood hazard areas, upon placement of the lowest floor, including the basement, and prior to further vertical construction, the elevation certification required in Section 1612.5 shall be submitted to the *building official*.

108.9.5 Frame inspection. To be made after the roof, all framing, fire-blocking and bracing are in place and all pipes, chimneys and vents are complete and the rough electrical, plumbing, and heating wires, pipes and ducts are *approved*.

108.9.6 Insulation inspection. To be made after all insulation and vapor barriers are in place but before any gypsum board or plaster is applied.

DRAFT

108.9.7 Lath and/or gypsum board inspection. For shear walls, to be made after lathing and/or gypsum board, interior and exterior, is in place, but before any plastering is applied or before gypsum board joints and fasteners are taped and finished.

108.9.8 Final site inspection. To be made after all grading is complete, and all permanent erosion controls, stormwater facilities and stormwater best management practices have been installed.

Exception: A final site inspection is not required for projects with less than 750 square feet of *land disturbing activity*.

108.9.9 Final inspection. To be made after finish grading and the building is completed and before occupancy.

108.9.9.1 Flood hazard documentation. If located in a flood hazard area, documentation of the elevation of the lowest floor as required in Section 1612.5 shall be submitted to the *building official* prior to the final inspection.

108.10 Special inspections. For special inspections, see Chapter 17.

108.11 Other inspections. In addition to the called inspections specified above, the *building official* may make or require any other inspections of any construction work or site work to ascertain compliance with the provisions of this code and other pertinent laws and ordinances that are enforced by the *building official*.

108.12 Special investigation. If work that requires a permit or approval is commenced or performed prior to making formal application and receiving the *building official*'s permission to proceed, the *building official* may make a special investigation inspection before a permit is issued for the work. Where a special investigation is made, a special investigation fee may be assessed in accordance with the *Fee Subtitle*.

108.13 Reinspections. The *building official* may require a reinspection if work for which inspection is called is not complete, required corrections are not made, the inspection record is not properly posted on the work site, the *approved* plans are not readily available to the inspector, access is not provided on the date for which inspection is requested, or if deviations from *construction documents* that require the approval of the *building official* have been made without proper approval, or as otherwise required by the *building official*.

108.13.1 Compliance with International Existing Building Code Section 101.5. For the purpose of determining compliance with International Existing Building Code Section 101.5, Maintenance, the *building official* or the fire chief may cause any structure to be reinspected.

108.13.2 Reinspection fee. The *building official* may assess a reinspection fee as set forth in the *Fee Subtitle* for any action for which reinspection is required. In instances where reinspection fees have been assessed, no additional inspection of the work will be performed until the required fees have been paid.

DRAFT

SECTION 109
CERTIFICATE OF OCCUPANCY

109.1 Occupancy. No new building or structure shall be used or occupied until the *building official* has issued a Certificate of Occupancy. For *existing buildings*, a Certificate of Occupancy is required for:

1. Any *change of occupancy*,
2. Change in type of construction,
3. Addition, removal or change in type of a fire sprinkler system,
4. Changes in occupant load of an assembly occupancy,
5. Change in the number of *dwelling* units.

Exception: Certificates of occupancy are not required for:

1. Detached Group R-3 occupancies and Group U occupancies accessory to them, provided they shall not be used or occupied until *approved* for occupancy after final inspection.
2. Work exempt from permits under Section 106.2.
3. Work for which a temporary permit was issued under Section 106.13.

109.1.1 Effect of Certificate of Occupancy. Issuance of a Certificate of Occupancy is not approval of any violation of the provisions of this code or other pertinent laws and ordinances of the City. Certificates presuming to give authority to violate or cancel the provisions of this code or of other pertinent laws and ordinances of the City are not valid.

109.2 Change in occupancy. Changes in the occupancy of a building shall not be made except as specified in the International Existing Building Code.

109.3 Certificate issued. After satisfactory completion of inspections, if the *building official* finds that the building or structure requiring a Certificate of Occupancy complies with the provisions of this code, the Fire Code, other pertinent laws, ordinances and regulations of the City, and with all conditions imposed under any of them, and that the applicant has complied with all requirements to be performed prior to issuance of a Certificate of Occupancy in other pertinent laws, ordinances or regulations

or in a Master Use Permit, or otherwise imposed by the *building official* or by another City department under any pertinent laws, ordinances or regulations, then the *building official* shall issue a Certificate of Occupancy which shall contain the following information:

1. The building permit number;
2. The address of the building;
3. A description of that portion of the building for which the certificate is issued;
4. A statement that the described portion of the building has been inspected for compliance with the requirements of this; and
5. The name of the *building official*.

109.4 Temporary certificate. A Temporary Certificate of Occupancy may be issued by the *building official* for the use of a portion or portions of a building or structure prior to the completion of the entire building or structure if all devices and safeguards for fire protection and life safety, as required by this code, the Fire Code, and other pertinent laws and ordinances of the City, are maintained in a safe and usable condition.

109.5 Posting. A Certificate of Occupancy shall be posted in a conspicuous place on the premises and shall not be removed except by the *building official*.

109.6 Suspension or revocation of Certificates of Occupancy.

109.6.1 Notice of suspension or revocation. Whenever the *building official* determines there are grounds for suspending or revoking a Certificate of Occupancy, the *building official* may issue a notice of revocation. The notice shall state the reason for suspension or revocation, and shall set the date that the suspension or revocation will take effect if compliance is not achieved by the date set in the notice, which shall be a reasonable time for compliance.

109.6.2 Standards for suspension or revocation of Certificates of Occupancy. The *building official* may suspend or revoke a Certificate of Occupancy if:

1. The certificate is issued in error or on the basis of incorrect information supplied; or
2. It is determined that the building or structure or portion thereof is in violation of any pertinent laws or ordinances of the City or any of the provisions of this code; or
3. When the building, site, applicant, or owner is in violation of any requirement or condition imposed by or pursuant to any other pertinent laws or ordinances of the City that provide for suspension or revocation of a Certificate of Occupancy.

109.6.3 Service of notice of suspension or revocation. The notice of suspension or revocation shall be served upon the owner, agent or other responsible *person* by personal service or regular first class mail addressed to the last known address of such *person* or if no address is available after reasonable inquiry, the notice may be posted in a conspicuous place on the premises. The notice may also be posted if served by personal service or first class mail.

109.6.4 Effect of notice of suspension or revocation. The notice shall be considered an order of the *building official* if no request for review before the *building official* is made pursuant to Section 109.6.5. Nothing in this subsection shall be deemed to limit or preclude any action or proceeding pursuant to Sections 102 or 103 of this code.

109.6.5 Review of suspension or revocation of Certificate of Occupancy by the building official. Any *person* affected by a notice of revocation issued pursuant to Section 109.6 may obtain a review of the notice by making a request in writing within ten days after service of the notice. When the last day of the period computed is a Saturday, Sunday, or city holiday, the period shall run until 5 p.m. of the next business day.

109.6.5.1 Review procedure. The review shall occur not less than ten nor more than 20 days after the request is received by the *building official* unless otherwise agreed by the *person* requesting the review. Any *person* affected by the notice of revocation may submit additional information to the *building official*. The review shall be made by a representative of the *building official* who will review any additional information that is submitted and the basis for issuance of the notice of suspension or revocation. The reviewer may request clarification of the information received and a site visit.

109.6.5.2 Decision. After the review, the *building official* shall:

1. Sustain the notice;
2. Withdraw the notice;
3. Amend the notice; or
4. Continue the review to a date certain

109.6.5.3 Order. The *building official* shall issue an order containing the decision within 15 days of the date that the review is completed and shall cause the order to be mailed by regular first class mail to the *persons* requesting the review and the *persons* named on the notice of violation addressed to their last known address.

DRAFT

SECTION 110
FEES

110.1 Fees. A fee for each building permit and for other activities related to the enforcement of this code shall be paid as set forth in the *Fee Subtitle*.

DRAFT

CHAPTER 2

DEFINITIONS

User notes:

About this chapter: *Codes, by their very nature, are technical documents. Every word, term and punctuation mark can add to or change the meaning of a technical requirement. It is necessary to maintain a consensus on the specific meaning of each term contained in the code. Chapter 2 performs this function by stating clearly what specific terms mean for the purpose of the code.*

Code development reminder: *Code change proposals to sections preceded by the designation [A] or [BS] will be considered by one of the code development committees meeting during the 2019 (Group B) Code Development Cycle. See explanation on page iv.*

SECTION 201
GENERAL

201.1 Scope. Unless otherwise expressly stated, the following words and terms shall, for the purposes of this code, have the meanings shown in this chapter.

201.2 Interchangeability. Words used in the present tense include the future; words stated in the masculine gender include the feminine and neuter; the singular number includes the plural and the plural, the singular.

201.3 Terms defined in other codes. Where terms are not defined in this code and are defined in the *International Energy Conservation Code*, *International Fuel Gas Code*, *International Fire Code*, *International Mechanical Code* or ((~~*International*~~)) *Uniform Plumbing Code*, such terms shall have the meanings ascribed to them as in those codes.

201.4 Terms not defined. Where terms are not defined through the methods authorized by this section, such terms shall have ordinarily accepted meanings such as the context implies.

201.5 References to other codes. Whenever an International, National or Uniform Code is referenced in this code, it shall mean the Seattle edition of that code, including any local amendments. References to the "Building Code," "Fire Code," "Mechanical Code" and "Plumbing Code" mean the Seattle editions of those codes.

DRAFT

SECTION 202
DEFINITIONS

[BG] 24-HOUR BASIS. The actual time that a person is an occupant within a facility for the purpose of receiving care. It shall not include a facility that is open for 24 hours and is capable of providing care to someone visiting the facility during any segment of the 24 hours.

[BS] AAC MASONRY. *Masonry* made of autoclaved aerated concrete (AAC) units, manufactured without internal reinforcement and bonded together using thin- or thick-bed *mortar*.

[BE] ACCESSIBLE. A *site*, *building*, *facility* or portion thereof that complies with Chapter 11.

[BE] ACCESSIBLE MEANS OF EGRESS. A continuous and unobstructed way of egress travel from any *accessible* point in a *building* or *facility* to a *public way*.

[BE] ACCESSIBLE ROUTE. A continuous, unobstructed path that complies with Chapter 11.

[BE] ACCESSIBLE UNIT. A *dwelling unit* or *sleeping unit* that complies with this code and the provisions for Accessible units in ICC A117.1.

[BS] ACCREDITATION BODY. An *approved*, third-party organization that is independent of the grading and inspection agencies, and the lumber mills, and that initially accredits and subsequently monitors, on a continuing basis, the competency and performance of a grading or inspection agency related to carrying out specific tasks.

[A] ADDITION. An extension or increase in floor area, number of stories or height of a building or structure.

[BS] ADHERED MASONRY VENEER. *Veneer* secured and supported through the adhesion of an *approved* bonding material applied to an *approved backing*.

[BS] ADOBE CONSTRUCTION. Construction in which the exterior *load-bearing* and *nonload-bearing walls* and partitions are of unfired clay *masonry units*, and floors, roofs and interior framing are wholly or partly of wood or other *approved* materials.

Adobe, stabilized. Unfired clay *masonry units* to which admixtures, such as emulsified asphalt, are added during the manufacturing process to limit the units' water absorption so as to increase their durability.

Adobe, unstabilized. Unfired clay *masonry units* that do not meet the definition of "Adobe, stabilized."

[W] ADULT FAMILY HOME. A *dwelling* licensed by the state of Washington in which a person or persons provide personal care, special care, room and board to more than one but not more than six adults who are not related by blood or marriage to the person or persons providing the services.

[F] AEROSOL CONTAINER. A metal can or plastic container up to a maximum size of 33.8 fluid ounces (1000 ml), or a glass bottle up to a maximum size of 4 fluid ounces (118 ml), designed and intended to dispense an aerosol.

[F] AEROSOL PRODUCT. A combination of a container, a propellant and a material that is dispensed. Aerosol products shall be classified by means of the calculation of their chemical heats of combustion and shall be designated Level 1, Level 2 or Level 3.

Level 1 aerosol products. Those with a total chemical heat of combustion that is less than or equal to 8,600 British thermal units per pound (Btu/lb) (20 kJ/g).

Level 2 aerosol products. Those with a total chemical heat of combustion that is greater than 8,600 Btu/lb (20 kJ/g), but less than or equal to 13,000 Btu/lb (30 kJ/g).

Level 3 aerosol products. Those with a total chemical heat of combustion that is greater than 13,000 Btu/lb (30 kJ/g).

[BS] AGGREGATE. In roofing, crushed stone, crushed slag or water-worn gravel used for surfacing for *roof coverings.*

[BG] AGRICULTURAL BUILDING. A structure designed and constructed to house farm implements, hay, grain, poultry, livestock or other horticultural products. This structure shall not be a place of human habitation or a place of employment where agricultural products are processed, treated or packaged, nor shall it be a place used by the public.

[BF] AIR-IMPERMEABLE INSULATION. An insulation having an air permeance equal to or less than 0.02 l/s × m^2 at 75 pa pressure differential tested in accordance with ASTM E2178 or ASTM E283.

[BG] AIR-INFLATED STRUCTURE. A structure that uses air-pressurized membrane beams, arches or other elements to enclose space. Occupants of such a structure do not occupy the pressurized area used to support the structure.

[BG] AIR-SUPPORTED STRUCTURE. A structure wherein the shape of the structure is attained by air pressure and occupants of the structure are within the elevated pressure area. Air-supported structures are of two basic types:

Double skin. Similar to a single skin, but with an attached liner that is separated from the outer skin and provides an airspace which serves for insulation, acoustic, aesthetic or similar purposes.

Single skin. Where there is only the single outer skin and the air pressure is directly against that skin.

[BE] AISLE. An unenclosed *exit access* component that defines and provides a path of egress travel.

[BE] AISLE ACCESSWAY. That portion of an *exit access* that leads to an *aisle*.

[F] ALARM NOTIFICATION APPLIANCE. A *fire alarm system* component such as a bell, horn, speaker, light or text display that provides audible, tactile or visible outputs, or any combination thereof.

[F] ALARM SIGNAL. A signal indicating an emergency requiring immediate action, such as a signal indicative of fire.

[F] ALARM VERIFICATION FEATURE. A feature of *automatic* fire detection and alarm systems to reduce unwanted alarms wherein *smoke detectors* report alarm conditions for a minimum period of time, or confirm alarm conditions within a given time period, after being *automatically* reset, in order to be accepted as a valid alarm-initiation signal.

[BS] ALLOWABLE STRESS DESIGN. A method of proportioning structural members, such that elastically computed stresses produced in the members by *nominal loads* do not exceed *specified* allowable stresses (also called "working stress design").

[A] ALTERATION. Any construction or renovation to an *existing structure* other than *repair* or *addition*.

[BE] ALTERNATING TREAD DEVICE. A device that has a series of steps between 50 and 70 degrees (0.87 and 1.22 rad) from horizontal, usually attached to a center support rail in an alternating manner so that the user does not have both feet on the same level at the same time.

[BG] AMBULATORY CARE FACILITY. Buildings or portions thereof used to provide medical, surgical, psychiatric, nursing or similar care on a less than 24-hour basis to persons who are rendered *incapable of self-preservation* by the services provided or staff has accepted responsibility for care recipients already incapable.

[BG] ANCHOR BUILDING. An exterior perimeter building of a group other than H having direct access to a *covered or open mall building* but having required *means of egress* independent of the mall.

[BS] ANCHORED MASONRY VENEER. *Veneer* secured with *approved* mechanical fasteners to an *approved backing.*

[BF] ANNULAR SPACE. The opening around the penetrating item.

DRAFT

[F] ANNUNCIATOR. A unit containing one or more indicator lamps, alphanumeric displays or other equivalent means in which each indication provides status information about a circuit, condition or location.

[A] APPROVED. Acceptable to the *building official*.

[A] APPROVED AGENCY. An established and recognized agency that is regularly engaged in conducting tests, furnishing inspection services or furnishing product certification where such agency has been *approved* by the *building official*.

[BS] APPROVED FABRICATOR. An established and qualified person, firm or corporation *approved* by the *building official* pursuant to Chapter 17 of this code.

[A] APPROVED SOURCE. An independent person, firm or corporation, *approved* by the *building official*, who is competent and experienced in the application of engineering principles to materials, methods or systems analyses.

[BS] AREA (for masonry).

Gross cross-sectional. The *area* delineated by the out-to-out *specified* dimensions of *masonry* in the plane under consideration.

Net cross-sectional. The *area* of *masonry units*, grout and *mortar* crossed by the plane under consideration based on out-to-out *specified* dimensions.

[BG] AREA, BUILDING. The area included within surrounding *exterior walls*, or *exterior walls* and *fire walls*, exclusive of vent *shafts* and *courts*. Areas of the building not provided with surrounding walls shall be included in the building area if such areas are included within the horizontal projection of the roof or floor above.

[BE] AREA OF REFUGE. An area where persons unable to use *stairways* can remain temporarily to await instructions or assistance during emergency evacuation.

[BE] AREA OF SPORT ACTIVITY. That portion of an indoor or outdoor space where the play or practice of a sport occurs.

[BG] AREAWAY. A subsurface space adjacent to a building open at the top or protected at the top by a grating or *guard*.

ASSEMBLY SEATING, MULTILEVEL. See "Multilevel assembly seating."

[W] ASSISTED LIVING FACILITY. A home or other institution, licensed by the state of Washington, providing housing, basic services and assuming general responsibility for the safety and well-being of residents under chapters 18.20 RCW and 388-78A WAC. These facilities may provide care to residents with symptoms consistent with dementia requiring additional security measures.

[BG] ATRIUM. An opening connecting two or more *stories* other than enclosed *stairways*, elevators, hoistways, escalators, plumbing, electrical, air-conditioning or other equipment, which is closed at the top and not defined as a mall. *Stories*, as used in this definition, do not include balconies within assembly groups or *mezzanines* that comply with Section 505.

[BG] ATTIC. The space between the ceiling framing of the top story and the underside of the roof.

[F] AUDIBLE ALARM NOTIFICATION APPLIANCE. A notification appliance that alerts by the sense of hearing.

[F] AUTOMATIC. As applied to fire protection devices, a device or system providing an emergency function without the necessity for human intervention and activated as a result of a predetermined temperature rise, rate of temperature rise or combustion products.

[F] AUTOMATIC FIRE-EXTINGUISHING SYSTEM. An *approved* system of devices and equipment which *automatically* detects a fire and discharges an *approved* fire-extinguishing agent onto or in the area of a fire.

[F] AUTOMATIC SMOKE DETECTION SYSTEM. A *fire alarm system* that has initiation devices that utilize *smoke detectors* for protection of an area such as a room or space with detectors to provide early warning of fire.

[F] AUTOMATIC SPRINKLER SYSTEM. An *automatic sprinkler system*, for fire protection purposes, is an integrated system of underground and overhead piping designed in accordance with fire protection engineering standards. The system includes a suitable water supply. The portion of the system above the ground is a network of specially sized or hydraulically designed piping installed in a structure or area, generally overhead, and to which *automatic* sprinklers are connected in a systematic pattern. The system is usually activated by heat from a fire and discharges water over the fire area.

[F] AUTOMATIC WATER MIST SYSTEM. A system consisting of a water supply, a pressure source and a distribution piping system with attached nozzles, which, at or above a minimum operating pressure defined by its listing, discharges water in fine droplets meeting the requirements of NFPA 750 for the purpose of the control, suppression or extinguishment of a fire. Such systems include wet-pipe, dry-pipe and preaction types. The systems are designed as engineered, preengineered, local-application or total-flooding systems.

[F] AVERAGE AMBIENT SOUND LEVEL. The root mean square, A-weighted sound pressure level measured over a 24-hour period, or the time any person is present, whichever time period is less.

DRAFT

[BG] AWNING. ((~~An architectural projection that provides weather protection, identity or decoration and is partially or wholly supported by the building to which it is attached. An awning is comprised of a lightweight *frame structure* over which a covering is attached.~~)) A protective covering with a nonrigid surface projecting from a building.

AWNING SIGN. A sign applied to the surface of an *awning* or *canopy*.

[BF] BACKING. The wall or surface to which the *veneer* is secured.

[BE] BALANCED DOOR. A door equipped with double-pivoted hardware so designed as to cause a semicounterbalanced swing action when opening.

[F] BALED COTTON. A natural seed fiber wrapped in and secured with industry accepted materials, usually consisting of burlap, woven polypropylene, polyethylene or cotton or sheet polyethylene, and secured with steel, synthetic or wire bands or wire; also includes linters (lint removed from the cottonseed) and motes (residual materials from the ginning process).

[F] BALED COTTON, DENSELY PACKED. Cotton made into banded bales with a packing density of not less than 22 pounds per cubic foot (360 kg/m^3), and dimensions complying with the following: a length of 55 inches (1397 mm), a width of 21 inches (533.4 mm) and a height of 27.6 to 35.4 inches (701 to 899 mm).

[BS] BALLAST. In roofing, ballast comes in the form of large stones or paver systems or light-weight interlocking paver systems and is used to provide uplift resistance for roofing systems that are not adhered or mechanically attached to the *roof deck*.

[F] BARRICADE. A structure that consists of a combination of walls, floor and roof, which is designed to withstand the rapid release of energy in an *explosion* and which is fully confined, partially vented or fully vented; or other effective method of shielding from explosive materials by a natural or artificial barrier.

Artificial barricade. An artificial mound or revetment a minimum thickness of 3 feet (914 mm).

Natural barricade. Natural features of the ground, such as hills, or timber of sufficient density that the surrounding exposures that require protection cannot be seen from the magazine or building containing explosives when the trees are bare of leaves.

[BS] BASE FLOOD. The *flood* having a 1-percent chance of being equaled or exceeded in any given year.

[BS] BASE FLOOD ELEVATION. The elevation of the *base flood*, including wave height, relative to the National Geodetic Vertical Datum (NGVD), North American Vertical Datum (NAVD) or other datum specified on the *Flood Insurance Rate Map* (FIRM).

[BS] BASEMENT (for flood loads). The portion of a building having its floor subgrade (below ground level) on all sides. This definition of "Basement" is limited in application to the provisions of Section 1612.

[BG] BASEMENT. A *story* that is not a *story above grade plane* (see "*Story above grade plane*"). This definition of "Basement" does not apply to the provisions of Section 1612 for flood *loads*.

[BS] BEARING WALL STRUCTURE. A building or other structure in which vertical *loads* from floors and roofs are primarily supported by walls.

[BS] BED JOINT. The horizontal layer of *mortar* on which a *masonry unit* is laid.

[BE] BLEACHERS. Tiered seating supported on a dedicated structural system and two or more rows high and is not a building element (see "*Grandstand*").

[BG] BOARDING HOUSE. A building arranged or used for lodging for compensation, with or without meals, and not occupied as a single-family unit.

[F] BOILING POINT. The temperature at which the vapor pressure of a *liquid* equals the atmospheric pressure of 14.7 pounds per square inch (psia) (101 kPa) or 760 mm of mercury. Where an accurate boiling point is unavailable for the material in question, or for mixtures which do not have a constant boiling point, for the purposes of this classification, the 20-percent evaporated point of a distillation performed in accordance with ASTM D86 shall be used as the boiling point of the *liquid*.

[W] BOTTLE FILLING STATION. A plumbing fixture connected to the potable water distribution system and sanitary drainage system that is designed and intended for filling personal use drinking water bottles or containers not less than 10 inches (254 mm) in height. Such fixtures can be separate from or integral to a drinking fountain and can incorporate a water filter and a cooling system for chilling the drinking water.

[BS] BRACED WALL LINE. A straight line through the building plan that represents the location of the lateral resistance provided by the wall bracing.

[BS] BRACED WALL PANEL. A full-height section of wall constructed to resist in-plane shear loads through interaction of framing members, sheathing material and anchors. The panel's length meets the requirements of its particular bracing method and contributes toward the total amount of bracing required along its *braced wall line*.

[BE] BREAKOUT. For revolving doors, a process whereby wings or door panels can be pushed open manually for *means of egress* travel.

DRAFT

[BS] BRICK.

Calcium silicate (sand lime brick). A pressed and subsequently autoclaved unit that consists of sand and lime, with or without the inclusion of other materials.

Clay or shale. A solid or hollow *masonry unit* of clay or shale, usually formed into a rectangular *prism*, then burned or fired in a kiln; brick is a ceramic product.

Concrete. A concrete *masonry unit* made from Portland cement, water, and suitable aggregates, with or without the inclusion of other materials.

[A] BUILDING. Any structure utilized or intended for supporting or sheltering any occupancy.

BUILDING AREA. See "Area, building."

[BG] BUILDING ELEMENT. A fundamental component of building construction, listed in Table 601, which may or may not be of fire-resistance-rated construction and is constructed of materials based on the building type of construction.

BUILDING HEIGHT. See "Height, building."

[BS] BUILDING-INTEGRATED PHOTOVOLTAIC (BIPV) PRODUCT. A building product that incorporates photovoltaic modules and functions as a component of the building envelope.

[BS] BUILDING-INTEGRATED PHOTOVOLTAIC ROOF PANEL (BIPV ROOF PANEL). A photovoltaic panel that functions as a component of the building envelope.

[BG] BUILDING LINE. The line established by law, beyond which a building shall not extend, except as specifically provided by law.

[A] BUILDING OFFICIAL. The ((~~officer or other designated authority charged with the administration and enforcement of this code~~)) Director of the Seattle Department of Construction and Inspections, or a duly authorized representative.

[BS] BUILT-UP ROOF COVERING. Two or more layers of felt cemented together and surfaced with a cap sheet, mineral *aggregate*, smooth coating or similar surfacing material.

[BG] CABLE-RESTRAINED, AIR-SUPPORTED STRUCTURE. A structure in which the uplift is resisted by cables or webbings which are anchored to either foundations or dead men. Reinforcing cable or webbing is attached by various methods to the membrane or is an integral part of the membrane. This is not a cable-supported structure.

[BG] CANOPY. ((~~A permanent structure or architectural projection of rigid construction over which a covering is attached that provides weather protection, identity or decoration. A canopy is permitted to be structurally independent or supported by attachment to a building on one or more sides.~~)) A protective covering with a rigid surface projecting from a building. *Marquees* are a type of *canopy*.

CANOPY SIGN. A sign applied to the surface of a *canopy*.

[F] CAPACITOR ENERGY STORAGE SYSTEM. A stationary, rechargeable energy storage system consisting of capacitors, chargers, controls and associated electrical equipment designed to provide electrical power to a building or facility. The system is typically used to provide standby or emergency power, an uninterruptable power supply, load shedding, load sharing or similar capabilities.

Preengineered capacitor energy storage system. A capacitor energy storage system consisting of capacitors, an energy management system, components and modules that are produced in a factory, designed to constitute the system when assembled and shipped to the job site for assembly.

Prepackaged capacitor energy storage system. A capacitor energy storage system consisting of capacitors, an energy management system, components and modules that is factory assembled and then shipped as a complete unit for installation at the job site.

[F] CARBON DIOXIDE EXTINGUISHING SYSTEMS. A system supplying carbon dioxide (CO_2) from a pressurized vessel through fixed pipes and nozzles. The system includes a manual- or *automatic*-actuating mechanism.

[F] CARBON MONOXIDE ALARM. A single- or multiple-station alarm intended to detect carbon monoxide gas and alert occupants by a distinct audible signal. It incorporates a sensor, control components and an alarm notification appliance in a single unit.

[F] CARBON MONOXIDE DETECTOR. A device with an integral sensor to detect carbon monoxide gas and transmit an alarm signal to a connected alarm control unit.

[BG] CARE SUITE. In Group I-2 occupancies, a group of treatment rooms, care recipient sleeping rooms and the support rooms or spaces and circulation space within the suite where staff are in attendance for supervision of all care recipients within the suite, and the suite is in compliance with the requirements of Section 407.4.4.

[BS] CAST STONE. A building stone manufactured from Portland cement concrete precast and used as a *trim*, *veneer* or facing on or in buildings or structures.

[F] CEILING LIMIT. The maximum concentration of an airborne contaminant to which one may be exposed. The ceiling limits utilized are those published in DOL 29 CFR Part 1910.1000. The ceiling Recommended Exposure Limit (REL-C) concentra-

DRAFT

tions published by the U.S. National Institute for Occupational Safety and Health (NIOSH), Threshold Limit Value—Ceiling (TLV-C) concentrations published by the American Conference of Governmental Industrial Hygienists (ACGIH), Ceiling Workplace Environmental Exposure Level (WEEL-Ceiling) Guides published by the American Industrial Hygiene Association (AIHA), and other *approved*, consistent measures are allowed as surrogates for hazardous substances not listed in DOL 29 CFR Part 1910.1000.

[BF] CEILING RADIATION DAMPER. A *listed* device installed in a ceiling membrane of a fire-resistance-rated floor/ceiling or roof/ceiling assembly to limit *automatically* the radiative heat transfer through an air inlet/outlet opening. Ceiling radiation dampers include air terminal units, ceiling dampers and ceiling air diffusers.

[BG] CELL (Group I-3 occupancy). A room within a housing unit in a detention or correctional facility used to confine inmates or prisoners.

[BS] CELL (masonry). A void space having a gross cross-sectional *area* greater than 1-1/2 square inches (967 mm^2).

[BG] CELL TIER. Levels of *cells* vertically stacked above one another within a *housing unit*.

[BS] CEMENT PLASTER. A mixture of Portland or blended cement, Portland cement or blended cement and hydrated lime, masonry cement or plastic cement and aggregate and other *approved* materials as specified in this code.

[BF] CERAMIC FIBER BLANKET. A high-temperature *mineral wool* insulation material made of alumina-silica ceramic or calcium magnesium silicate soluble fibers and weighing 4 to 10 pounds per cubic foot (pcf) (64 to 160 kg/m^3).

[BS] CERTIFICATE OF COMPLIANCE. A certificate stating that materials and products meet specified standards or that work was done in compliance with *approved construction documents*.

[A] CHANGE OF OCCUPANCY. A change in the use of a building or a portion a building which results in one of the following:

1. A change of occupancy classification.
2. A change from one group to another group within an occupancy classification.
3. Any change in use within a group for ((~~which there is a change in application of the requirements of this code~~)) a specific occupancy classification.

[W] CHILD CARE. The care of children during any period of a 24-hour day.

[W] CHILD CARE, FAMILY HOME. A *child care* facility, licensed by the state of Washington, located in the *dwelling* of the person or persons under whose direct care and supervision the child is placed, for the care of 12 or fewer children, including children who reside at the home.

[BG] CHILDREN'S PLAY STRUCTURE. A structure composed of one or more components, where the user enters a play environment.

[M] CHIMNEY. A primarily vertical structure containing one or more flues, for the purpose of carrying gaseous products of combustion and air from a fuel-burning appliance to the outdoor atmosphere.

Factory-built chimney. A *listed* and *labeled chimney* composed of factory-made components, assembled in the field in accordance with manufacturer's instructions and the conditions of the listing.

Masonry chimney. A field-constructed *chimney* composed of solid masonry units, bricks, stones, or concrete.

Metal chimney. A field-constructed *chimney* of metal.

[M] CHIMNEY TYPES.

High-heat appliance type. An *approved* chimney for removing the products of combustion from fuel-burning, high-heat appliances producing combustion gases in excess of 2000°F (1093°C) measured at the appliance flue outlet (see Section 2113.11.3).

Low-heat appliance type. An *approved* chimney for removing the products of combustion from fuel-burning, low-heat appliances producing combustion gases not in excess of 1000°F (538°C) under normal operating conditions, but capable of producing combustion gases of 1400°F (760°C) during intermittent forces firing for periods up to 1 hour. Temperatures shall be measured at the appliance flue outlet.

Masonry type. A field-constructed chimney of solid *masonry units* or stones.

Medium-heat appliance type. An *approved* chimney for removing the products of combustion from fuel-burning, medium-heat appliances producing combustion gases not exceeding 2000°F (1093°C) measured at the appliance flue outlet (see Section 2113.11.2).

[BE] CIRCULATION PATH. An exterior or interior way of passage from one place to another for pedestrians.

[F] CLEAN AGENT. Electrically nonconducting, volatile or gaseous fire extinguishant that does not leave a residue upon vaporation.

DRAFT

[BF] CLIMATE ZONE. A geographical region that has been assigned climatic criteria as specified in Chapters 3CE and 3RE of the *International Energy Conservation Code*.

[BG] CLINIC, OUTPATIENT. Buildings or portions thereof used to provide *medical care* on less than a 24-hour basis to persons who are not rendered *incapable of self-preservation* by the services provided.

[W] CLOSED CIRCUIT TELEPHONE. A telephone with a dedicated line such as a house phone, courtesy phone or phone that must be used to gain entrance to a facility.

[F] CLOSED SYSTEM. The *use* of a *solid* or *liquid hazardous material* involving a closed vessel or system that remains closed during normal operations where vapors emitted by the product are not liberated outside of the vessel or system and the product is not exposed to the atmosphere during normal operations; and all *uses* of *compressed gases*. Examples of closed systems for *solids* and *liquids* include product conveyed through a piping system into a closed vessel, system or piece of equipment.

[BS] COASTAL A ZONE. Area within a *special flood hazard area*, landward of a V zone or landward of an open coast without mapped *coastal high-hazard areas*. In a coastal A zone, the principal source of flooding must be astronomical tides, storm surges, seiches or tsunamis, not riverine flooding. During the base flood conditions, the potential for breaking wave height shall be greater than or equal to 1-1/2 feet (457 mm). The inland limit of the coastal A zone is (a) the Limit of Moderate Wave Action if delineated on a FIRM, or (b) designated by the authority having jurisdiction.

[BS] COASTAL HIGH-HAZARD AREA. Area within the *special flood hazard area* extending from offshore to the inland limit of a primary dune along an open coast and any other area that is subject to high-velocity wave action from storms or seismic sources, and shown on a Flood Insurance Rate Map (FIRM) or other flood hazard map as velocity Zone V, VO, VE or V1-30.

[BS] COLLAR JOINT. Vertical longitudinal space between *wythes* of *masonry* or between *masonry wythe* and backup construction that is permitted to be filled with *mortar* or grout.

[BS] COLLECTOR. A horizontal *diaphragm* element parallel and in line with the applied force that collects and transfers *diaphragm* shear forces to the vertical elements of the lateral force-resisting system or distributes forces within the *diaphragm*, or both.

[BF] COMBINATION FIRE/SMOKE DAMPER. A *listed* device installed in ducts and air transfer openings designed to close *automatically* upon the detection of heat and resist the passage of flame and smoke. The device is installed to operate *automatically*, controlled by a smoke detection system, and where required, is capable of being positioned from a *fire command center*.

[BS] COMBINED PILE RAFT. A geotechnical composite construction that combines the bearing effect of both foundation elements, raft and piles, by taking into account interactions between the foundation elements and the subsoil.

[F] COMBUSTIBLE DUST. Finely divided *solid* material that is 420 microns or less in diameter and which, when dispersed in air in the proper proportions, could be ignited by a flame, spark or other source of ignition. Combustible dust will pass through a U.S. No. 40 standard sieve.

[F] COMBUSTIBLE FIBERS. Readily ignitable and free-burning materials in a fibrous or shredded form, such as cocoa fiber, cloth, cotton, excelsior, hay, hemp, henequen, istle, jute, kapok, oakum, rags, sisal, Spanish moss, straw, tow, wastepaper, certain synthetic fibers or other like materials. This definition does not include densely packed baled cotton.

[F] COMBUSTIBLE LIQUID. A *liquid* having a closed cup *flash point* at or above 100°F (38°C). Combustible liquids shall be subdivided as follows:

Class II. *Liquids* having a closed cup *flash point* at or above 100°F (38°C) and below 140°F (60°C).

Class IIIA. *Liquids* having a closed cup *flash point* at or above 140°F (60°C) and below 200°F (93°C).

Class IIIB. *Liquids* having a closed cup *flash point* at or above 200°F (93°C).

The category of combustible liquids does not include *compressed gases* or *cryogenic fluids*.

[F] COMMERCIAL MOTOR VEHICLE. A motor vehicle used to transport passengers or property where the motor vehicle meets one of the following:

1. Has a gross vehicle weight rating of 10,000 pounds (4540 kg) or more.
2. Is designed to transport 16 or more passengers, including the driver.

[BE] COMMON PATH OF EGRESS TRAVEL. That portion of *exit access* travel distance measured from the most remote point of each room, area or space to that point where the occupants have separate and distinct access to two *exits* or *exit access* doorways.

[BE] COMMON USE. Interior or exterior *circulation paths*, rooms, spaces or elements that are not for public use and are made available for the shared use of two or more people.

[F] COMPRESSED GAS. A material or mixture of materials that meets both of the following:

1. Is a gas at 68°F (20°C) or less at 14.7 pounds per square inch atmosphere (psia) (101 kPa) of pressure.
2. Has a *boiling point* of 68°F (20°C) or less at 14.7 psia (101 kPa) which is either liquefied, nonliquefied or in solution, except those gases which have no other health- or physical-hazard properties are not considered to be compressed until the pressure in the packaging exceeds 41 psia (282 kPa) at 68°F (20°C).

DRAFT

The states of a compressed gas are categorized as follows:

1. Nonliquefied compressed gases are gases, other than those in solution, which are in a packaging under the charged pressure and are entirely gaseous at a temperature of 68°F (20°C).
2. Liquefied compressed gases are gases that, in a packaging under the charged pressure, are partially *liquid* at a temperature of 68°F (20°C).
3. Compressed gases in solution are nonliquefied gases that are dissolved in a solvent.
4. Compressed gas mixtures consist of a mixture of two or more compressed gases contained in a packaging, the hazard properties of which are represented by the properties of the mixture as a whole.

[BS] CONCRETE.

Carbonate aggregate. Concrete made with aggregates consisting mainly of calcium or magnesium carbonate, such as limestone or dolomite, and containing 40 percent or less quartz, chert or flint.

Cellular. A lightweight insulating concrete made by mixing a preformed foam with Portland cement slurry and having a dry unit weight of approximately 30 pcf (480 kg/m^3).

Lightweight aggregate. Concrete made with aggregates of expanded clay, shale, slag or slate or sintered fly ash or any natural lightweight aggregate meeting ASTM C330 and possessing equivalent fire-resistance properties and weighing 85 to 115 pcf (1360 to 1840 kg/m^3).

Perlite. A lightweight insulating concrete having a dry unit weight of approximately 30 pcf (480 kg/m^3) made with perlite concrete aggregate. Perlite aggregate is produced from a volcanic rock which, when heated, expands to form a glass-like material of cellular structure.

Sand-lightweight. Concrete made with a combination of expanded clay, shale, slag, slate, sintered fly ash, or any natural lightweight aggregate meeting ASTM C330 and possessing equivalent fire-resistance properties and natural sand. Its unit weight is generally between 105 and 120 pcf (1680 and 1920 kg/m^3).

Siliceous aggregate. Concrete made with normal-weight aggregates consisting mainly of silica or compounds other than calcium or magnesium carbonate, which contains more than 40-percent quartz, chert or flint.

Vermiculite. A light weight insulating concrete made with vermiculite concrete aggregate which is laminated micaceous material produced by expanding the ore at high temperatures. When added to a Portland cement slurry the resulting concrete has a dry unit weight of approximately 30 pcf (480 kg/m^3).

[BG] CONGREGATE LIVING FACILITIES. A building or part thereof that contains *sleeping units* where residents share bathroom or kitchen facilities, or both.

[F] CONSTANTLY ATTENDED LOCATION. A designated location at a facility staffed by trained personnel on a continuous basis where alarm or supervisory signals are monitored and facilities are provided for notification of the fire department or other emergency services.

[A] CONSTRUCTION DOCUMENTS. Written, graphic and pictorial documents, in electronic or paper format, prepared or assembled for describing the design, location and physical characteristics of the elements of a project necessary for obtaining a building *permit* and final approval of construction.

[BG] CONSTRUCTION TYPES. See Section 602.

Type I. See Section 602.2.

Type II. See Section 602.2.

Type III. See Section 602.3.

Type IV. See Section 602.4.

Type V. See Section 602.5.

[BF] CONTINUOUS INSULATION (ci). Insulating material that is continuous across all structural members without thermal bridges other than fasteners and service openings. It is installed on the interior or exterior, or is integral to any opaque surface of the building envelope.

[F] CONTROL AREA. Spaces within a building where quantities of *hazardous materials* not exceeding the maximum allowable quantities per control area are stored, dispensed, *used* or handled. See the definition of "Outdoor control area" in the *International Fire Code*.

[BS] CONTROLLED LOW-STRENGTH MATERIAL. A self-compacted, cementitious material used primarily as a backfill in place of compacted fill.

[BS] CONVENTIONAL LIGHT-FRAME CONSTRUCTION. Construction whose primary structural elements are formed by a system of repetitive wood-framing members. See Section 2308 for conventional light-frame construction provisions.

[BG] CORNICE. A projecting horizontal molded element located at or near the top of an architectural feature.

[BE] CORRIDOR. An enclosed *exit access* component that defines and provides a path of egress travel.

DRAFT

CORRIDOR, OPEN-ENDED. See "Open-ended corridor."

[BF] CORRIDOR DAMPER. A *listed* device intended for use where air ducts penetrate or terminate at horizontal openings in the ceilings of fire-resistance-rated corridors, where the corridor ceiling is permitted to be constructed as required for the corridor walls.

[BS] CORROSION RESISTANCE. The ability of a material to withstand deterioration of its surface or its properties when exposed to its environment.

[F] CORROSIVE. A chemical that causes visible destruction of, or irreversible alterations in, living tissue by chemical action at the point of contact. A chemical shall be considered corrosive if, when tested on the intact skin of albino rabbits by the method described in DOTn 49 CFR, Part 173.137, such chemical destroys or changes irreversibly the structure of the tissue at the point of contact following an exposure period of 4 hours. This term does not refer to action on inanimate surfaces.

[BG] COURT. An open, uncovered space, unobstructed to the sky, bounded on three or more sides by exterior building walls or other enclosing devices.

COVERED BOAT MOORAGE. A *pier* or system of floating or fixed accessways to which vessels on water may be secured, and any portion of which is covered by a roof.

[BG] COVERED MALL BUILDING. A single building enclosing a number of tenants and occupants, such as retail stores, drinking and dining establishments, entertainment and amusement facilities, passenger transportation terminals, offices and other similar uses wherein two or more tenants have a main entrance into one or more malls. *Anchor buildings* shall not be considered as a part of the covered mall building. The term "covered mall building" shall include *open mall buildings* as defined below.

Mall. A roofed or covered common pedestrian area within a *covered mall building* that serves as access for two or more tenants and not to exceed three levels that are open to each other. The term "mall" shall include open malls as defined below.

Open mall. An unroofed common pedestrian way serving a number of tenants not exceeding three levels. Circulation at levels above grade shall be permitted to include open exterior balconies leading to *exits* discharging at grade.

Open mall building. Several structures housing a number of tenants, such as retail stores, drinking and dining establishments, entertainment and amusement facilities, offices, and other similar uses, wherein two or more tenants have a main entrance into one or more open malls. *Anchor buildings* are not considered as a part of the open mall building.

[BS] CRIPPLE WALL. A framed stud wall extending from the top of the foundation to the underside of floor framing for the lowest occupied floor level.

[F] CRITICAL CIRCUIT. A circuit that requires continuous operation to ensure safety of the structure and occupants.

[BS] CROSS-LAMINATED TIMBER. A prefabricated engineered wood product consisting of not less than three layers of solid-sawn lumber or *structural composite lumber* where the adjacent layers are cross oriented and bonded with structural adhesive to form a solid wood element.

[F] CRYOGENIC FLUID. A *liquid* having a *boiling point* lower than -150°F (-101°C) at 14.7 pounds per square inch atmosphere (psia) (an absolute pressure of 101 kPa).

[BG] CUSTODIAL CARE. Assistance with day-to-day living tasks; such as assistance with cooking, taking medication, bathing, using toilet facilities and other tasks of daily living. Custodial care includes persons receiving care who have the ability to respond to emergency situations and evacuate at a slower rate and/or who have mental and psychiatric complications.

[BS] DALLE GLASS. A decorative composite glazing material made of individual pieces of glass that are embedded in a cast matrix of concrete or epoxy.

DAMPER. See "*Ceiling radiation damper*," "*Combination fire/smoke damper*," "*Corridor damper*," "*Fire damper*" and "*Smoke damper*."

((~~[BS] DANGEROUS.~~ ~~Any building, structure or portion thereof that meets any of the conditions described below shall be deemed dangerous:~~

1. ~~The building or structure has collapsed, has partially collapsed, has moved off its foundation or lacks the necessary support of the ground.~~
2. ~~There exists a significant risk of collapse, detachment or dislodgment of any portion, member, appurtenance or ornamentation of the building or structure under service loads.~~))

[F] DAY BOX. A portable magazine designed to hold explosive materials constructed in accordance with the requirements for a Type 3 magazine as defined and classified in Chapter 56 of the *International Fire Code*.

[BS] DEAD LOAD. The weight of materials of construction incorporated into the building, including but not limited to walls, floors, roofs, ceilings, *stairways*, built-in partitions, finishes, cladding and other similarly incorporated architectural and structural items, and the weight of fixed service equipment, such as cranes, plumbing stacks and risers, electrical feeders, heating, ventilating and air-conditioning systems and *automatic sprinkler systems*.

DRAFT

[BS] DECORATIVE GLASS. A carved, leaded or *Dalle glass* or glazing material whose purpose is decorative or artistic, not functional; whose coloring, texture or other design qualities or components cannot be removed without destroying the glazing material and whose surface, or assembly into which it is incorporated, is divided into segments.

[F] DECORATIVE MATERIALS. All materials applied over the building *interior finish* for decorative, acoustical or other effect including, but not limited to, curtains, draperies, fabrics and streamers; and all other materials utilized for decorative effect including, but not limited to, bulletin boards, artwork, posters, photographs, batting, cloth, cotton, hay, stalks, straw, vines, leaves, trees, moss and similar items, foam plastics and materials containing foam plastics. Decorative materials do not include wall coverings, ceiling coverings, floor coverings, ordinary window shades, *interior finish* and materials 0.025 inch (0.64 mm) or less in thickness applied directly to and adhering tightly to a substrate.

[BS] DEEP FOUNDATION. A deep foundation is a foundation element that does not satisfy the definition of a *shallow foundation.*

[BE] DEFEND-IN-PLACE. A method of emergency response that engages building components and trained staff to provide occupant safety during an emergency. Emergency response involves remaining in place, relocating within the building, or both, without evacuating the building.

[A] DEFERRED SUBMITTAL. Those portions of the design that are not submitted at the time of the application and that are to be submitted to the *building official* within a specified period. *Deferred submittals* include but are not limited to shop drawings for truss systems and sprinkler systems.

[F] DEFLAGRATION. An exothermic reaction, such as the extremely rapid oxidation of a flammable dust or vapor in air, in which the reaction progresses through the unburned material at a rate less than the velocity of sound. A deflagration can have an explosive effect.

[BF] DELAYED-ACTION CLOSER. A self-closing device that incorporates a delay prior to the initiation of closing. Delayed-action closers are mechanical devices with an adjustable delay.

[F] DELUGE SYSTEM. A sprinkler system employing open sprinklers attached to a piping system connected to a water supply through a valve that is opened by the operation of a detection system installed in the same areas as the sprinklers. When this valve opens, water flows into the piping system and discharges from all sprinklers attached thereto.

[BS] DESIGN DISPLACEMENT. See Section 1905.1.1.

[BS] DESIGN EARTHQUAKE GROUND MOTION. The earthquake ground motion that buildings and structures are specifically proportioned to resist in Section 1613.

[BS] DESIGN FLOOD. The *flood* associated with the greater of the following two areas:

1. Area with a flood plain subject to a 1-percent or greater chance of *flooding* in any year.
2. Area designated as a *flood hazard area* on a community's flood hazard map, or otherwise legally designated.

[BS] DESIGN FLOOD ELEVATION. The elevation of the "*design flood*," including wave height, relative to the datum specified on the community's legally designated flood hazard map. In areas designated as Zone AO, the *design flood elevation* shall be the elevation of the highest existing grade of the building's perimeter plus the depth number (in feet) specified on the flood hazard map. In areas designated as Zone AO where a depth number is not specified on the map, the depth number shall be taken as being equal to 2 feet (610 mm).

DESIGN PROFESSIONAL, REGISTERED. See "Registered design professional."

DESIGN PROFESSIONAL IN RESPONSIBLE CHARGE, REGISTERED. See "Registered design professional in responsible charge."

[BS] DESIGN STRENGTH. The product of the nominal strength and a *resistance factor* (or strength reduction factor).

[BS] DESIGNATED SEISMIC SYSTEM. Those nonstructural components that require design in accordance with Chapter 13 of ASCE 7 and for which the component importance factor, I_p, is greater than 1 in accordance with Section 13.1.3 of ASCE 7.

[F] DETACHED BUILDING. A separate single-*story* building, without a basement or crawl space, used for the storage or *use* of *hazardous materials* and located an *approved* distance from all structures.

[BS] DETAILED PLAIN CONCRETE STRUCTURAL WALL. See Section 1905.1.1.

[BE] DETECTABLE WARNING. A standardized surface feature built in or applied to walking surfaces or other elements to warn visually impaired persons of hazards on a *circulation path.*

[F] DETECTOR, HEAT. A fire detector that senses heat— either abnormally high temperature or rate of rise, or both.

[F] DETONATION. An exothermic reaction characterized by the presence of a shock wave in the material which establishes and maintains the reaction. The reaction zone progresses through the material at a rate greater than the velocity of sound. The principal heating mechanism is one of shock compression. Detonations have an explosive effect.

DRAFT

[BG] DETOXIFICATION FACILITIES. Facilities that provide treatment for substance abuse, serving care recipients who are *incapable of self-preservation* or who are harmful to themselves or others.

[BS] DIAPHRAGM. A horizontal or sloped system acting to transmit lateral forces to vertical elements of the lateral force-resisting system. When the term "diaphragm" is used, it shall include horizontal bracing systems.

Diaphragm, blocked. In *light-frame construction*, a diaphragm in which all sheathing edges not occurring on a framing member are supported on and fastened to blocking.

Diaphragm boundary. In *light-frame construction*, a location where shear is transferred into or out of the diaphragm sheathing. Transfer is either to a boundary element or to another force-resisting element.

Diaphragm chord. A diaphragm boundary element perpendicular to the applied load that is assumed to take axial stresses due to the diaphragm moment.

Diaphragm, unblocked. A diaphragm that has edge nailing at supporting members only. Blocking between supporting structural members at panel edges is not included. Diaphragm panels are field nailed to supporting members.

[BS] DIMENSIONS (for Chapter 21).

Nominal. The *specified dimension* plus an allowance for the *joints* with which the units are to be laid. Nominal dimensions are usually stated in whole numbers. Thickness is given first, followed by height and then length.

Specified. Dimensions specified for the manufacture or construction of a unit, *joint* or element.

[BE] DIRECT ACCESS. A path of travel from a space to an immediately adjacent space through an opening in the common wall between the two spaces.

[F] DISPENSING. The pouring or transferring of any material from a container, tank or similar vessel, whereby vapors, dusts, fumes, mists or gases are liberated to the atmosphere.

DISPLAY SURFACE. The area of a *sign structure* used to display the message.

DOOR, BALANCED. See "Balanced door."

DOOR, LOW-ENERGY POWER-OPERATED. See "Low-energy power-operated door."

DOOR, POWER-ASSISTED. See "Power-assisted door."

DOOR, POWER-OPERATED. See "Power-operated door."

DOORWAY, EXIT ACCESS. See "Exit access doorway."

[BG] DORMITORY. A space in a building where group sleeping accommodations are provided in one room, or in a series of closely associated rooms, for persons not members of the same family group, under joint occupancy and single management, as in college dormitories or fraternity houses.

[BF] DRAFTSTOP. A material, device or construction installed to restrict the movement of air within open spaces of concealed areas of building components such as crawl spaces, floor/ceiling assemblies, roof/ceiling assemblies and *attics*.

DRAG STRUT. See "Collector."

[BS] DRILLED SHAFT. A cast-in-place deep foundation element, also referred to as a caisson, drilled pier or bored pile, constructed by drilling a hole (with or without permanent casing or drilling fluid) into soil or rock and filling it with fluid concrete after the drilling equipment is removed.

Socketed drilled shaft. A drilled shaft with a permanent pipe or tube casing that extends down to bedrock and an uncased socket drilled into the bedrock.

[F] DRY-CHEMICAL EXTINGUISHING AGENT. A powder composed of small particles, usually of sodium bicarbonate, potassium bicarbonate, urea-potassium-based bicarbonate, potassium chloride or monoammonium phosphate, with added particulate material supplemented by special treatment to provide resistance to packing, resistance to moisture absorption (caking) and the proper flow capabilities.

[BS] DRY FLOODPROOFING. A combination of design modifications that results in a building or structure, including the attendant utilities and equipment and sanitary facilities, being watertight with walls substantially impermeable to the passage of water and with structural components having the capacity to resist *loads* as identified in ASCE 7.

[A] DWELLING. A building that contains one or two *dwelling units* used, intended or designed to be used, rented, leased, let or hired out to be occupied for living purposes.

[A] DWELLING UNIT. A single unit providing complete, independent living facilities for one or more persons, including permanent provisions for living, sleeping, eating, cooking and sanitation.

DWELLING UNIT OR SLEEPING UNIT, MULTISTORY. See "Multistory unit."

DRAFT

[W] EFFICIENCY DWELLING UNIT. A dwelling unit where all permanent provisions for living, sleeping, eating and cooking are contained in a single room.

[BE] EGRESS COURT. A *court* or *yard* which provides access to a *public way* for one or more *exits*.

ELECTRIC SIGN. Any sign containing electrical wiring, but not including signs illuminated by an exterior light source.

[BF] ELECTRICAL CIRCUIT PROTECTIVE SYSTEM. A specific construction of devices, materials, or coatings installed as a fire-resistive barrier system applied to electrical system components, such as cable trays, conduits and other raceways, open run cables and conductors, cables, and conductors.

[F] ELEVATOR GROUP. A grouping of elevators in a building located adjacent or directly across from one another that responds to common hall call buttons.

[F] EMERGENCY ALARM SYSTEM. A system to provide indication and warning of emergency situations involving *hazardous materials*.

[F] EMERGENCY CONTROL STATION. An *approved* location on the premises where signals from emergency equipment are received and which is staffed by trained personnel.

[BE] EMERGENCY ESCAPE AND RESCUE OPENING. An operable window, door or other similar device that provides for a means of escape and access for rescue in the event of an emergency.

((~~[F] EMERGENCY POWER SYSTEM.~~ ~~A source of automatic electric power of a required capacity and duration to operate required life-safety, fire alarm, detection and ventilation systems in the event of a failure of the primary power. Emergency power systems are required for electrical loads where interruption of the primary power could result in loss of human life or serious injuries.~~))

EMERGENCY POWER SYSTEM. An electrical system that complies with Seattle Electrical Code Article 700.

[F] EMERGENCY VOICE/ALARM COMMUNICATIONS. Dedicated manual or *automatic* facilities for originating and distributing voice instructions, as well as alert and evacuation signals pertaining to a fire emergency, to the occupants of a building.

[BE] EMPLOYEE WORK AREA. All or any portion of a space used only by employees and only for work. *Corridors*, toilet rooms, kitchenettes and break rooms are not employee work areas.

[BS] ENGINEERED WOOD RIM BOARD. A full-depth structural composite lumber, wood structural panel, structural glued laminated timber or prefabricated wood I-joist member designed to transfer horizontal (shear) and vertical (compression) loads, provide attachment for diaphragm sheathing, siding and exterior deck ledgers, and provide lateral support at the ends of floor or roof joists or rafters.

ENTRANCE, PUBLIC. See "Public entrance."

ENTRANCE, RESTRICTED. See "Restricted entrance."

ENTRANCE, SERVICE. See "Service entrance."

[BG] EQUIPMENT PLATFORM. An unoccupied, elevated platform used exclusively for mechanical systems or industrial process equipment, including the associated elevated walkways, stairways, alternating tread devices and ladders necessary to access the platform (see Section 505.3).

[BS] ESSENTIAL FACILITIES. Buildings and other structures that are intended to remain operational in the event of extreme environmental loading from *flood*, wind, snow or earthquakes.

[F] EXHAUSTED ENCLOSURE. An appliance or piece of equipment that consists of a top, a back and two sides providing a means of local exhaust for capturing gases, fumes, vapors and mists. Such enclosures include laboratory hoods, exhaust fume hoods and similar appliances and equipment used to locally retain and exhaust the gases, fumes, vapors and mists that could be released. Rooms or areas provided with general *ventilation*, in themselves, are not exhausted enclosures.

[A] EXISTING BUILDING (Except for Section 1612.2). A building erected prior to the date of adoption of the appropriate code, or one for which a ((~~legal building *permit*~~)) valid Certificate of Occupancy has been issued.

[BS] EXISTING STRUCTURE (Except for Section 1612.2). A structure erected prior to the date of adoption of the appropriate code, or one for which a ((~~legal building *permit*~~)) valid Certificate of Occupancy has been issued.

[BE] EXIT. That portion of a *means of egress* system between the *exit access* and the *exit discharge* or *public way*. Exit components include exterior exit doors at the *level of exit discharge*, *interior exit stairways* and *ramps*, *exit passageways*, *exterior exit stairways* and *ramps* and *horizontal exits*.

[BE] EXIT ACCESS. That portion of a *means of egress* system that leads from any occupied portion of a building or structure to an *exit*.

[BE] EXIT ACCESS DOORWAY. A door or access point along the path of egress travel from an occupied room, area or space where the path of egress enters an intervening room, *corridor*, *exit access stairway* or *ramp*.

DRAFT

[BE] EXIT ACCESS RAMP. A *ramp* within the exit access portion of the means of egress system.

[BE] EXIT ACCESS STAIRWAY. A *stairway* within the exit access portion of the means of egress system.

[BE] EXIT DISCHARGE. That portion of a *means of egress* system between the termination of an *exit* and a *public way*.

[BE] EXIT DISCHARGE, LEVEL OF. The *story* at the point at which an *exit* terminates and an *exit discharge* begins.

EXIT, HORIZONTAL. See "Horizontal exit."

[BE] EXIT PASSAGEWAY. An *exit* component that ((~~is separated from other interior spaces of a building or structure by fire-resistance-rated construction and opening protectives, and~~)) provides for a protected path of egress travel in a horizontal direction to an *exit* or to the *exit discharge*.

[BF] EXPANDED VINYL WALL COVERING. Wall covering consisting of a woven textile backing, an expanded vinyl base coat layer and a nonexpanded vinyl skin coat. The expanded base coat layer is a homogeneous vinyl layer that contains a blowing agent. During processing, the blowing agent decomposes, causing this layer to expand by forming closed cells. The total thickness of the wall covering is approximately 0.055 inch to 0.070 inch (1.4 mm to 1.78 mm).

[F] EXPLOSION. An effect produced by the sudden violent expansion of gases, which may be accompanied by a shock wave or disruption, or both, of enclosing materials or structures. An explosion could result from any of the following:

1. Chemical changes such as rapid oxidation, *deflagration* or *detonation*, decomposition of molecules and runaway polymerization (usually *detonation*s).
2. Physical changes such as pressure tank ruptures.
3. Atomic changes (nuclear fission or fusion).

[F] EXPLOSIVE. A chemical compound, mixture or device, the primary or common purpose of which is to function by explosion. The term includes, but is not limited to: dynamite, black powder, pellet powder, initiating explosives, detonators, safety fuses, squibs, detonating cord, igniter cord, and igniters.

The term "explosive" includes any material determined to be within the scope of USC Title 18: Chapter 40 and also includes any material classified as an explosive other than consumer fireworks, 1.4G by the *hazardous materials* regulations of DOTn 49 CFR Parts 100-185.

High explosive. Explosive material, such as dynamite, which can be caused to detonate by means of a No. 8 test blasting cap when unconfined.

Low explosive. Explosive material that will burn or deflagrate when ignited. It is characterized by a rate of reaction that is less than the speed of sound. Examples of low explosives include, but are not limited to: black powder; safety fuse; igniters; igniter cord; fuse lighters; fireworks; and propellants, 1.3C.

Mass-detonating explosives. Division 1.1, 1.2 and 1.5 explosives alone or in combination, or loaded into various types of ammunition or containers, most of which can be expected to explode virtually instantaneously when a small portion is subjected to fire, severe concussion, impact, the impulse of an initiating agent or the effect of a considerable discharge of energy from without. Materials that react in this manner represent a mass explosion hazard. Such an explosive will normally cause severe structural damage to adjacent objects. Explosive propagation could occur immediately to other items of ammunition and explosives stored sufficiently close to and not adequately protected from the initially exploding pile with a time interval short enough so that two or more quantities must be considered as one for quantity-distance purposes.

UN/DOTn Class 1 explosives. The former classification system used by DOTn included the terms "high" and "low" explosives as defined herein. The following terms further define explosives under the current system applied by DOTn for all explosive materials defined as hazard Class 1 materials. Compatibility group letters are used in concert with the division to specify further limitations on each division noted (i.e., the letter G identifies the material as a pyrotechnic substance or article containing a pyrotechnic substance and similar materials).

Division 1.1. Explosives that have a mass explosion hazard. A mass explosion is one which affects almost the entire load instantaneously.

Division 1.2. Explosives that have a projection hazard but not a mass explosion hazard.

Division 1.3. Explosives that have a fire hazard and either a minor blast hazard or a minor projection hazard or both, but not a mass explosion hazard.

Division 1.4. Explosives that pose a minor explosion hazard. The explosive effects are largely confined to the package and no projection of fragments of appreciable size or range is to be expected. An external fire must not cause virtually instantaneous explosion of almost the entire contents of the package.

Division 1.5. Very insensitive explosives. This division is comprised of substances that have a mass explosion hazard, but that are so insensitive there is very little probability of initiation or of transition from burning to *detonation* under normal conditions of transport.

DRAFT

Division 1.6. Extremely insensitive articles which do not have a mass explosion hazard. This division is comprised of articles that contain only extremely insensitive detonating substances and which demonstrate a negligible probability of accidental initiation or propagation.

[BE] EXTERIOR EXIT RAMP. An *exit* component that serves to meet one or more *means of egress* design requirements, such as required number of *exits* or *exit access* travel distance, and is open to *yards*, *courts* or *public ways*.

[BE] EXTERIOR EXIT STAIRWAY. An *exit* component that serves to meet one or more *means of egress* design requirements, such as required number of *exits* or *exit access* travel distance, and is open to *yards*, *courts* or *public ways*.

[BF] EXTERIOR INSULATION AND FINISH SYSTEMS (EIFS). EIFS are nonstructural, nonload-bearing, *exterior wall* cladding systems that consist of an insulation board attached either adhesively or mechanically, or both, to the substrate; an integrally reinforced base coat and a textured protective finish coat.

[BF] EXTERIOR INSULATION AND FINISH SYSTEMS (EIFS) WITH DRAINAGE. An EIFS that incorporates a means of drainage applied over a *water-resistive barrier*.

[BF] EXTERIOR SURFACES. Weather-exposed surfaces.

[BF] EXTERIOR WALL. A wall, bearing or nonbearing, that is used as an enclosing wall for a building, other than a *fire wall*, and that has a slope of 60 degrees (1.05 rad) or greater with the horizontal plane.

[BF] EXTERIOR WALL COVERING. A material or assembly of materials applied on the exterior side of *exterior walls* for the purpose of providing a weather-resisting barrier, insulation or for aesthetics, including but not limited to, *veneers*, siding, *exterior insulation and finish systems*, architectural *trim* and embellishments such as *cornices*, soffits, facias, gutters and leaders.

[BF] EXTERIOR WALL ENVELOPE. A system or assembly of *exterior wall* components, including *exterior wall* finish materials, that provides protection of the building structural members, including framing and sheathing materials, and conditioned interior space, from the detrimental effects of the exterior environment.

[BF] F RATING. The time period that the *through-penetration firestop system* limits the spread of fire through the penetration when tested in accordance with ASTM E814 or UL 1479.

[BF] FABRIC PARTITION. A partition consisting of a finished surface made of fabric, without a continuous rigid backing, that is directly attached to a framing system in which the vertical framing members are spaced greater than 4 feet (1219 mm) on center.

[BS] FABRICATED ITEM. Structural, load-bearing or lateral load-resisting members or assemblies consisting of materials assembled prior to installation in a building or structure, or subjected to operations such as heat treatment, thermal cutting, cold working or reforming after manufacture and prior to installation in a building or structure. Materials produced in accordance with standards referenced by this code, such as rolled structural steel shapes, steel reinforcing bars, *masonry units* and *wood structural panels*, or in accordance with a referenced standard that provides requirements for quality control done under the supervision of a third-party quality control agency, are not "fabricated items."

[F] FABRICATION AREA. An area within a semiconductor fabrication facility and related research and development areas in which there are processes using hazardous production materials. Such areas are allowed to include ancillary rooms or areas such as dressing rooms and offices that are directly related to the fabrication area processes.

[A] FACILITY. All or any portion of buildings, structures, *site* improvements, elements and pedestrian or vehicular routes located on a *site*.

[BS] FACTORED LOAD. The product of a *nominal load* and a *load factor*.

FEE SUBTITLE. Seattle Municipal Code Title 22, Subtitle IX.

[BS] FENESTRATION. Products classified as either vertical fenestration or skylights and sloped glazing, installed in such a manner as to preserve the weather-resistant barrier of the wall or roof in which they are installed. Fenestration includes products with glass or other transparent or translucent materials.

[BS] FENESTRATION, VERTICAL. Windows that are fixed or movable, opaque doors, glazed doors, glazed block and combination opaque and glazed doors installed in a wall at less than 15 degrees from the vertical.

[BS] FIBER-CEMENT (BACKER BOARD, SIDING, SOFFIT, TRIM AND UNDERLAYMENT) PRODUCTS. Manufactured thin section composites of hydraulic cementitious matrices and discrete nonasbestos fibers.

[BF] FIBER-REINFORCED POLYMER. A polymeric composite material consisting of reinforcement fibers, such as glass, impregnated with a fiber-binding polymer which is then molded and hardened. Fiber-reinforced polymers are permitted to contain cores laminated between fiber-reinforced polymer facings.

[BS] FIBERBOARD. A fibrous, homogeneous panel made from lignocellulosic fibers (usually wood or cane) and having a density of less than 31 pounds per cubic foot (pcf) (497 kg/m^3) but more than 10 pcf (160 kg/m^3).

FIELD NAILING. See "Nailing, field."

DRAFT

FIRE ALARM BOX, MANUAL. See "Manual fire alarm box."

[F] FIRE ALARM CONTROL UNIT. A system component that receives inputs from *automatic* and manual *fire alarm* devices and may be capable of supplying power to detection devices and transponders or off-premises transmitters. The control unit may be capable of providing a transfer of power to the notification appliances and transfer of condition to relays or devices.

[F] FIRE ALARM SIGNAL. A signal initiated by a *fire alarm-initiating device* such as a *manual fire alarm box, automatic fire detector*, waterflow switch or other device whose activation is indicative of the presence of a fire or fire signature.

[F] FIRE ALARM SYSTEM. A system or portion of a combination system consisting of components and circuits arranged to monitor and annunciate the status of *fire alarm* or *supervisory signal-initiating device*s and to initiate the appropriate response to those signals.

[BF] FIRE AREA. The aggregate floor area enclosed and bounded by *fire walls*, *fire barriers*, *exterior walls* or *horizontal assemblies* of a building. Areas of the building not provided with surrounding walls shall be included in the fire area if such areas are included within the horizontal projection of the roof or floor next above.

[BF] FIRE BARRIER. A fire-resistance-rated wall assembly of materials designed to restrict the spread of fire in which continuity is maintained.

FIRE CODE OFFICIAL. The chief of the Seattle Fire Department or a duly authorized representative.

[F] FIRE COMMAND CENTER. The principal attended or unattended location where the status of detection, alarm communications and control systems is displayed, and from which the systems can be manually controlled.

[BF] FIRE DAMPER. A *listed* device installed in ducts and air transfer openings designed to close *automatically* upon detection of heat and resist the passage of flame. Fire dampers are classified for use in either static systems that will *automatically* shut down in the event of a fire, or in dynamic systems that continue to operate during a fire. A dynamic fire damper is tested and rated for closure under elevated temperature airflow.

FIRE DETECTION SYSTEM. A system of smoke or heat detectors monitored at an *approved* central station, with no requirement for notification appliances in the building.

[F] FIRE DETECTOR, AUTOMATIC. A device designed to detect the presence of a fire signature and to initiate action.

FIRE DISTRICT. That part of the city within the boundary described as follows:

Beginning at the intersection of the center line of Alaskan Way and Clay Street; thence northeasterly along the center line of Clay Street to an intersection with the center line of Denny Way; thence easterly along the center line of Denny Way to an intersection with the center line of Yale Avenue; thence southeasterly along the center line of Yale Avenue to an intersection with the center line of Interstate Highway 5; thence southerly and southeasterly along the centerline of Interstate Highway 5 to an intersection with the center line of 7th Avenue South; thence southerly along the center line of 7th Avenue South to an intersection with the center line of Dearborn Street; thence westerly along the center line of Dearborn Street to an intersection with the center line of Airport Way; thence northwesterly along the center line of Airport Way to an intersection with the center line of 4th Avenue South; thence southerly along the center line of 4th Avenue South to an intersection with the center line of South Royal Brougham Way; thence westerly along the center line of South Royal Brougham Way to an intersection with the center line of South Alaskan Way; thence southerly along the center line of South Alaskan Way to an intersection with the center line of South Massachusetts Street, thence westerly along the center line of South Massachusetts Street to the Outer Harbor Line in Elliott Bay, thence northerly and northwesterly along the Outer Harbor Line to an intersection with the center line of West Harrison Street, thence easterly along the center line of West Harrison Street to an intersection with the center line of Alaskan Way, then southeasterly along the center line of Alaskan Way to the point of beginning.

Buildings and structures located partially within and partially outside the *Fire District* are considered to be located in the *Fire District*. See Figure 202F.

DRAFT

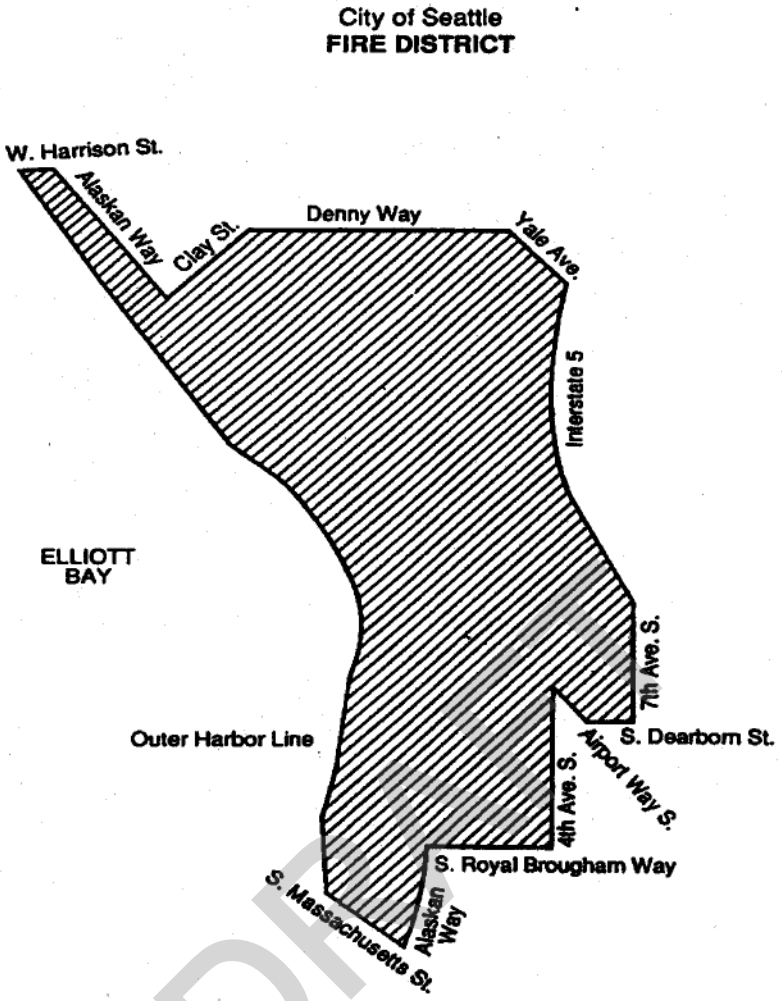

FIGURE 202F

[BF] FIRE DOOR. The door component of a *fire door assembly*.

[BF] FIRE DOOR ASSEMBLY. Any combination of a *fire door*, frame, hardware and other accessories that together provide a specific degree of fire protection to the opening.

FIRE DOOR ASSEMBLY, FLOOR. See "Floor fire door assembly."

[BF] FIRE EXIT HARDWARE. *Panic hardware* that is *listed* for use on *fire door assemblies*.

[F] FIRE LANE. A road or other passageway developed to allow the passage of fire apparatus. A fire lane is not necessarily intended for vehicular traffic other than fire apparatus.

[BF] FIRE PARTITION. A vertical assembly of materials designed to restrict the spread of fire in which openings are protected.

[BF] FIRE PROTECTION RATING. The period of time that an opening protective will maintain the ability to confine a fire as determined by tests specified in Section 716. Ratings are stated in hours or minutes.

[F] FIRE PROTECTION SYSTEM. *Approved* devices, equipment and systems or combinations of systems used to detect a fire, activate an alarm, extinguish or control a fire, control or manage smoke and products of a fire or any combination thereof.

[BF] FIRE-RATED GLAZING. Glazing with either a *fire protection rating* or a *fire-resistance rating*.

[BF] FIRE RESISTANCE. That property of materials or their assemblies that prevents or retards the passage of excessive heat, hot gases or flames under conditions of use.

[BF] FIRE-RESISTANCE RATING. The period of time a building element, component or assembly maintains the ability to confine a fire, continues to perform a given structural function, or both, as determined by the tests, or the methods based on tests, prescribed in Section 703.

[BF] FIRE-RESISTANT JOINT SYSTEM. An assemblage of specific materials or products that are designed, tested and fire-resistance rated in accordance with either ASTM E1966 or UL 2079 to resist for a prescribed period of time the passage of fire through *joints* made in or between fire-resistance-rated assemblies.

FIRE-RETARDANT COVERING. Material with a flame spread rating of less than 15 when tested in accordance with ASTM E84.

[F] FIRE SAFETY FUNCTIONS. Building and fire control functions that are intended to increase the level of life safety for occupants or to control the spread of harmful effects of fire.

[BF] FIRE SEPARATION DISTANCE. The distance measured from the building face to one of the following:

1. The closest interior *lot line*.
2. To the ((~~centerline~~)) opposite side of a street, an alley or *public way*.
3. To an imaginary line between two buildings on the lot.

The distance shall be measured at right angles from the face of the wall.

[BF] FIRE WALL. A fire-resistance-rated wall having protected openings, which restricts the spread of fire and extends continuously from the foundation to or through the roof. ((~~, with sufficient structural stability under fire conditions to allow collapse of construction on either side without collapse of the wall.~~))

[BF] FIRE WINDOW ASSEMBLY. A window constructed and glazed to give protection against the passage of fire.

[BF] FIREBLOCKING. Building materials, or materials *approved* for use as fireblocking, installed to resist the free passage of flame to other areas of the building through concealed spaces.

[M] FIREPLACE. A hearth and fire chamber or similar prepared place in which a fire may be made and which is built in conjunction with a chimney.

[BS] FIREPLACE THROAT. The opening between the top of the firebox and the smoke chamber.

FIRESTOP, MEMBRANE-PENETRATION. See "Membrane-penetration firestop."

FIRESTOP, PENETRATION. See "Penetration firestop."

FIRESTOP SYSTEM, THROUGH-PENETRATION. See "Through-penetration firestop system."

[F] FIREWORKS. Any composition or device for the purpose of producing a visible or audible effect for entertainment purposes by combustion, *deflagration* or *detonation* that meets the definition of 1.4G fireworks or 1.3G fireworks.

Fireworks, 1.3G. Large fireworks devices, which are explosive materials, intended for use in fireworks displays and designed to produce audible or visible effects by combustion, *deflagration* or *detonation*. Such 1.3G fireworks include, but are not limited to, firecrackers containing more than 130 milligrams (2 grains) of explosive composition, aerial shells containing more than 40 grams of pyrotechnic composition, and other display pieces which exceed the limits for classification as 1.4G fireworks. Such 1.3G fireworks are also described as fireworks, UN0335 by the DOTn.

Fireworks, 1.4G. Small fireworks devices containing restricted amounts of pyrotechnic composition designed primarily to produce visible or audible effects by combustion or deflagration that complies with the construction, chemical composition and labeling regulations of the DOTn for fireworks, UN0336, and the U.S. Consumer Product Safety Commission (CPSC) as set forth in CPSC 16 CFR: Parts 1500 and 1507.

[BG] FIXED BASE OPERATOR (FBO). A commercial business granted the right by the airport sponsor to operate on an airport and provide aeronautical services, such as fueling, hangaring, tie-down and parking, aircraft rental, aircraft maintenance and flight instruction.

[BE] FIXED SEATING. Furniture or fixture designed and installed for the use of sitting and secured in place including bench-type seats and seats with or without backs or armrests.

[BF] FLAME SPREAD. The propagation of flame over a surface.

[BF] FLAME SPREAD INDEX. A comparative measure, expressed as a dimensionless number, derived from visual measurements of the spread of flame versus time for a material tested in accordance with ASTM E84 or UL 723.

[F] FLAMMABLE GAS. A material that is a gas at 68°F (20°C) or less at 14.7 pounds per square inch atmosphere (psia) (101 kPa) of pressure [a material that has a *boiling point* of 68°F (20°C) or less at 14.7 psia (101 kPa)], which also meets one of the following:

1. Is ignitable at 14.7 psia (101 kPa) when in a mixture of 13 percent or less by volume with air.
2. Has a flammable range at 14.7 psia (101 kPa) with air of at least 12 percent, regardless of the lower limit.

The limits specified shall be determined at 14.7 psi (101 kPa) of pressure and a temperature of 68°F (20°C) in accordance with ASTM E681.

DRAFT

[BE] GRADE FLOOR OPENING. A window or other opening located such that the sill height of the opening is not more than 44 inches (1118 mm) above or below the finished ground level adjacent to the opening.

[BG] GRADE PLANE. A reference plane representing the average of finished ground level adjoining the building at *exterior walls*. Where the finished ground level slopes away from the *exterior walls*, the reference plane shall be established by the lowest points within the area between the building and the *lot line* or, where the *lot line* is more than 6 feet (1829 mm) from the building, between the building and a point 6 feet (1829 mm) from the building. For grade of structures built over water, see Section 425.3.

GRADE PLANE, STORY ABOVE. See "Story above grade plane."

[BE] GRANDSTAND. Tiered seating supported on a dedicated structural system and two or more rows high and is not a building element (see "*Bleachers*").

[BG] GREENHOUSE. A structure or thermally isolated area of a building that maintains a specialized sunlit environment used for and essential to the cultivation, protection or maintenance of plants.

[BG] GROSS LEASABLE AREA. The total floor area designed for tenant occupancy and exclusive use. The area of tenant occupancy is measured from the centerlines of joint partitions to the outside of the tenant walls. All tenant areas, including areas used for storage, shall be included in calculating gross leasable area.

[BG] GROUP HOME. A facility for social rehabilitation, substance abuse or mental health problems that contains a group housing arrangement that provides *custodial care* but does not provide medical care.

[BE] GUARD. A building component or a system of building components located at or near the open sides of elevated walking surfaces that minimizes the possibility of a fall from the walking surface to a lower level.

[BG] GUESTROOM. A room used or intended to be used by one or more guests for living or sleeping purposes.

[BS] GYPSUM BOARD. The generic name for a family of sheet products consisting of a noncombustible core primarily of gypsum with paper surfacing. Gypsum wallboard, gypsum sheathing, gypsum base for gypsum veneer plaster, exterior gypsum soffit board, predecorated gypsum board and water-resistant gypsum backing board complying with the standards listed in Tables 2506.2, 2507.2 and Chapter 35 are types of gypsum board.

[BS] GYPSUM PANEL PRODUCT. The general name for a family of sheet products consisting essentially of gypsum.

[BS] GYPSUM PLASTER. A mixture of calcined gypsum or calcined gypsum and lime and aggregate and other *approved* materials as specified in this code.

[BS] GYPSUM VENEER PLASTER. *Gypsum plaster* applied to an *approved* base in one or more coats normally not exceeding 1/4 inch (6.4 mm) in total thickness.

[BG] HABITABLE SPACE. A space in a building for living, sleeping, eating or cooking. Bathrooms, toilet rooms, closets, halls, storage or utility spaces and similar areas are not considered habitable spaces.

[F] HALOGENATED EXTINGUISHING SYSTEM. A fire-extinguishing system using one or more atoms of an element from the halogen chemical series: fluorine, chlorine, bromine and iodine.

[F] HANDLING. The deliberate transport by any means to a point of storage or *use*.

[BE] HANDRAIL. A horizontal or sloping rail intended for grasping by the hand for guidance or support.

[BS] HARDBOARD. A fibrous-felted, homogeneous panel made from lignocellulosic fibers consolidated under heat and pressure in a hot press to a density not less than 31 pcf (497 kg/m^3).

HARDWARE. See "Fire exit hardware" and "Panic hardware."

[F] HAZARDOUS MATERIALS. Those chemicals or substances that are *physical hazards* or *health hazards* as classified in Section 307 and the *International Fire Code*, whether the materials are in usable or waste condition.

[F] HAZARDOUS PRODUCTION MATERIAL (HPM). A *solid*, *liquid* or gas associated with semiconductor manufacturing that has a degree-of-hazard rating in health, flammability or instability of Class 3 or 4 as ranked by NFPA 704 and which is *used* directly in research, laboratory or production processes which have as their end product materials that are not hazardous.

[BS] HEAD JOINT. Vertical *mortar joint* placed between *masonry units* within the *wythe* at the time the *masonry units* are laid.

[F] HEALTH HAZARD. A classification of a chemical for which there is statistically significant evidence that acute or chronic health effects are capable of occurring in exposed persons. The term "health hazard" includes chemicals that are *toxic* or *highly toxic*, and *corrosive*.

HEAT DETECTOR. See "Detector, heat."

[BG] HEIGHT, BUILDING. The vertical distance from *grade plane* to the average height of the highest roof surface other than rooftop structures complying with Section 1510.

DRAFT

[BS] HELICAL PILE. Manufactured steel deep foundation element consisting of a central shaft and one or more helical bearing plates. A helical pile is installed by rotating it into the ground. Each helical bearing plate is formed into a screw thread with a uniform defined pitch.

[F] HELIPAD. A structural surface that is used for the landing, taking off, taxiing and parking of helicopters.

[F] HELIPORT. An area of land or water or a structural surface that is used, or intended for use, for the landing and taking off of helicopters, and any appurtenant areas that are used, or intended for use, for heliport buildings or other heliport facilities.

[F] HELISTOP. The same as "heliport," except that no fueling, defueling, maintenance, repairs or storage of helicopters is permitted.

[F] HIGHER EDUCATION LABORATORY. Laboratories in Group B occupancies used for educational purposes above the 12th grade. Storage, use and handling of chemicals in such laboratories shall be limited to purposes related to testing, analysis, teaching, research or developmental activities on a nonproduction basis.

[F] HIGHLY TOXIC. A material which produces a lethal dose or lethal concentration that falls within any of the following categories:

1. A chemical that has a median lethal dose (LD_{50}) of 50 milligrams or less per kilogram of body weight when administered orally to albino rats weighing between 200 and 300 grams each.
2. A chemical that has a median lethal dose (LD_{50}) of 200 milligrams or less per kilogram of body weight when administered by continuous contact for 24 hours (or less if death occurs within 24 hours) with the bare skin of albino rabbits weighing between 2 and 3 kilograms each.
3. A chemical that has a median lethal concentration (LC_{50}) in air of 200 parts per million by volume or less of gas or vapor, or 2 milligrams per liter or less of mist, fume or dust, when administered by continuous inhalation for 1 hour (or less if death occurs within 1 hour) to albino rats weighing between 200 and 300 grams each.

Mixtures of these materials with ordinary materials, such as water, might not warrant classification as *highly toxic.* While this system is basically simple in application, any hazard evaluation that is required for the precise categorization of this type of material shall be performed by experienced, technically competent persons.

[BF] HIGH-PRESSURE DECORATIVE EXTERIOR-GRADE COMPACT LAMINATE (HPL). Panels consisting of layers of cellulose fibrous material impregnated with thermosetting resins and bonded together by a high-pressure process to form a homogeneous nonporous core suitable for exterior use.

[BF] HIGH-PRESSURE DECORATIVE EXTERIOR-GRADE COMPACT LAMINATE (HPL) SYSTEM. An *exterior wall covering* fabricated using HPL in a specific assembly including *joints*, seams, attachments, substrate, framing and other details as appropriate to a particular design.

[BG] HIGH-RISE BUILDING. A building with an occupied floor located more than 75 feet (22 860 mm) above the lowest level of fire department vehicle access.

[A] HISTORIC BUILDINGS. ((~~Any building or structure that is one or more of the following:~~)) See "LANDMARK".

((~~1. Listed or certified as eligible for listing by the State Historic Preservation Officer or the Keeper of the National Register of Historic Places, in the National Register of Historic Places.~~

~~2. Designated as historic under an applicable state or local law.~~

~~3. Certified as a contributing resource within a National Register, state designated or locally designated historic district.~~))

[BF] HORIZONTAL ASSEMBLY. A fire-resistance-rated floor or *roof assembly* of materials designed to restrict the spread of fire in which continuity is maintained.

[BE] HORIZONTAL EXIT. An *exit* component consisting of fire-resistance-rated construction and opening protectives intended to compartmentalize portions of a building thereby creating refuge areas that afford safety from the fire and smoke from the area of fire origin.

[W] HOSPICE CARE CENTER. A building or portion thereof used on a 24-hour basis for the provision of hospice services to terminally ill inpatients.

[BG] HOSPITALS AND PSYCHIATRIC HOSPITALS. Facilities that provide care or treatment for the medical, psychiatric, obstetrical, or surgical treatment of care recipients who are *incapable of self-preservation.*

[BG] HOUSING UNIT. A *dormitory* or a group of *cells* with a common dayroom in Group I-3.

HPM. See "Hazardous Production Material."

[F] HPM ROOM. A room used in conjunction with or serving a Group H-5 occupancy, where *HPM* is stored or *used* and which is classified as a Group H-2, H-3 or H-4 occupancy.

[BS] HURRICANE-PRONE REGIONS. Areas vulnerable to hurricanes defined as:

DRAFT

1. The U. S. Atlantic Ocean and Gulf of Mexico coasts where the basic design wind speed, *V* for Risk Category II buildings is greater than 115 mph (51.4 m/s);
2. Hawaii, Puerto Rico, Guam, Virgin Islands and American Samoa.

[F] HYDROGEN FUEL GAS ROOM. A room or space that is intended exclusively to house a *gaseous hydrogen system*.

[BS] ICE-SENSITIVE STRUCTURE. A structure for which the effect of an atmospheric ice *load* governs the design of a structure or portion thereof. This includes, but is not limited to, lattice structures, guyed masts, overhead lines, light suspension and cable-stayed bridges, aerial cable systems (e.g., for ski lifts or logging operations), amusement rides, open catwalks and platforms, flagpoles and signs.

[F] IMMEDIATELY DANGEROUS TO LIFE AND HEALTH (IDLH). The concentration of airborne contaminants which poses a threat of death, immediate or delayed permanent adverse health effects, or effects that could prevent escape from such an environment. This contaminant concentration level is established by the National Institute of Occupational Safety and Health (NIOSH) based on both toxicity and flammability. It generally is expressed in parts per million by volume (ppmv/v) or milligrams per cubic meter (mg/m^3). If adequate data do not exist for precise establishment of IDLH concentrations, an independent certified industrial hygienist, industrial toxicologist, appropriate regulatory agency or other source *approved* by the *building official* shall make such determination.

[BS] IMPACT LOAD. The *load* resulting from moving machinery, elevators, craneways, vehicles and other similar forces and kinetic *loads*, pressure and possible surcharge from fixed or moving *loads.*

[BG] INCAPABLE OF SELF-PRESERVATION. Persons who, because of age, physical limitations, mental limitations, chemical dependency or medical treatment, cannot respond as an individual to an emergency situation.

[F] INCOMPATIBLE MATERIALS. Materials that, when mixed, have the potential to react in a manner that generates heat, fumes, gases or byproducts which are hazardous to life or property.

[F] INERT GAS. A gas that is capable of reacting with other materials only under abnormal conditions such as high temperatures, pressures and similar extrinsic physical forces. Within the context of the code, inert gases do not exhibit either physical or health hazard properties as defined (other than acting as a simple asphyxiant) or hazard properties other than those of a *compressed gas.* Some of the more common inert gases include argon, helium, krypton, neon, nitrogen and xenon.

[F] INITIATING DEVICE. A system component that originates transmission of a change-of-state condition, such as in a *smoke detector*, *manual fire alarm box* or supervisory switch.

[BE] INTENDED TO BE OCCUPIED AS A RESIDENCE. This refers to a *dwelling unit* or *sleeping unit* that can or will be used all or part of the time as the occupant's place of abode.

[BE] INTERIOR EXIT RAMP. An *exit* component that serves to meet one or more *means of egress* design requirements, such as required number of *exits* or *exit access* travel distance, and provides for a protected path of egress travel to the *exit discharge* or *public way*.

[BE] INTERIOR EXIT STAIRWAY. An *exit* component that serves to meet one or more *means of egress* design requirements, such as required number of *exits* or *exit access* travel distance, and provides for a protected path of egress travel to the *exit discharge* or *public way.*

[BF] INTERIOR FINISH. Interior finish includes *interior wall and ceiling finish* and *interior floor finish*.

[BF] INTERIOR FLOOR FINISH. The exposed floor surfaces of buildings including coverings applied over a finished floor or *stair*, including risers.

[BF] INTERIOR FLOOR-WALL BASE. *Interior floor finish trim* used to provide a functional or decorative border at the intersection of walls and floors.

[BF] INTERIOR SURFACES. Surfaces other than weather exposed surfaces.

[BF] INTERIOR WALL AND CEILING FINISH. The exposed *interior surfaces* of buildings, including but not limited to: fixed or movable walls and partitions; toilet room privacy partitions; columns; ceilings; and interior wainscoting, paneling or other finish applied structurally or for decoration, acoustical correction, surface insulation, structural fire resistance or similar purposes, but not including *trim*.

[BS] INTERLAYMENT. A layer of felt or nonbituminous saturated felt not less than 18 inches (457 mm) wide, shingled between each course of a wood-shake *roof covering*.

[BF] INTUMESCENT FIRE-RESISTANT COATINGS. Thin film liquid mixture applied to substrates by brush, roller, spray or trowel which expands into a protective foamed layer to provide fire-resistant protection of the substrates when exposed to flame or intense heat.

[BS] JOINT. The opening in or between adjacent assemblies that is created due to building tolerances, or is designed to allow independent movement of the building in any plane caused by thermal, seismic, wind or any other loading.

((~~[A] JURISDICTION.~~ ~~The governmental unit that has adopted this code.~~))

DRAFT

[BF] L RATING. The air leakage rating of a *through penetration firestop system* or a fire-resistant *joint* system when tested in accordance with UL 1479 or UL 2079, respectively.

[A] LABEL. An identification applied on a product by the manufacturer that contains the name of the manufacturer, the function and performance characteristics of the product or material and the name and identification of an *approved agency*, and that indicates that the representative sample of the product or material has been tested and evaluated by an *approved agency* (see Section 1703.5, "Manufacturer's designation" and "Mark").

[A] LABELED. Equipment, materials or products to which has been affixed a *label*, seal, symbol or other identifying *mark* of a nationally recognized testing laboratory, *approved* agency or other organization concerned with product evaluation that maintains periodic inspection of the production of the above-labeled items and whose labeling indicates either that the equipment, material or product meets identified standards or has been tested and found suitable for a specified purpose.

[F] LABORATORY SUITE. A fire-rated, enclosed laboratory area providing one or more laboratory spaces within a Group B educational occupancy that includes ancillary uses such as offices, bathrooms and corridors that are contiguous with the laboratory area, and are constructed in accordance with Section 428.

LAND USE CODE. *Seattle Land Use Code*, Title 23 of the Seattle Municipal Code, as amended.

LAND-DISTURBING ACTIVITY. Any activity that results in a movement of earth, or a change in the existing soil cover (both vegetative and nonvegetative) or the existing topography. Land-disturbing activities include, but are not limited to, clearing, grading, filling, excavation or addition or replacement of impervious surface.

LANDMARK. A building or structure that is subject to a requirement to obtain a certificate of approval from the City Landmarks Preservation Board before altering or making significant changes to specific features or characteristics, that has been nominated for designation and the City Landmarks Preservation Board has not issued a determination regarding designation, that has been designated for preservation by the City Landmarks Preservation Board, that has been designated for preservation by the State of Washington, that has been listed or determined eligible to be listed in the National Register of Historic Places, or that is located in a *landmark* or special review district subject to a requirement to obtain a certificate of approval before making a change to the external appearance of a structure.

LEVEL OF EXIT DISCHARGE. See "Exit discharge, level of."

[BF] LIGHT-DIFFUSING SYSTEM. Construction consisting in whole or in part of lenses, panels, grids or baffles made with light-transmitting plastics positioned below independently mounted electrical light sources, skylights or light-transmitting plastic roof panels. Lenses, panels, grids and baffles that are part of an electrical fixture shall not be considered as a light-diffusing system.

[BS] LIGHT-FRAME CONSTRUCTION. Construction whose vertical and horizontal structural elements are primarily formed by a system of repetitive wood or cold-formed steel framing members.

[BF] LIGHT-TRANSMITTING PLASTIC ROOF PANELS. Structural plastic panels other than skylights that are fastened to structural members, or panels or sheathing and that are used as light-transmitting media in the plane of the roof.

[BF] LIGHT-TRANSMITTING PLASTIC WALL PANELS. Plastic materials that are fastened to structural members, or to structural panels or sheathing, and that are used as light-transmitting media in *exterior walls*.

[BS] LIMIT OF MODERATE WAVE ACTION. Line shown on FIRMs to indicate the inland limit of the 1-1/2-foot (457 mm) breaking wave height during the base flood.

[BS] LIMIT STATE. A condition beyond which a structure or member becomes unfit for service and is judged to be no longer useful for its intended function (serviceability limit state) or to be unsafe (strength limit state).

[F] LIQUID. A material that has a melting point that is equal to or less than 68°F (20°C) and a *boiling point* that is greater than 68°F (20°C) at 14.7 pounds per square inch absolute (psia) (101 kPa). When not otherwise identified, the term "liquid" includes both *flammable* and *combustible liquids.*

[F] LIQUID STORAGE ROOM. A room classified as a Group H-3 occupancy used for the storage of *flammable* or *combustible liquids* in a closed condition.

[F] LIQUID USE, DISPENSING AND MIXING ROOM. A room in which Class I, II and IIIA *flammable* or *combustible liquids* are *used*, dispensed or mixed in open containers.

[A] LISTED. Equipment, materials, products or services included in a list published by an organization acceptable to the *building* official and concerned with evaluation of products or services that maintains periodic inspection of production of listed equipment or materials or periodic evaluation of services and whose listing states either that the equipment, material, product or service meets identified standards or has been tested and found suitable for a specified purpose.

[BG] LIVE/WORK UNIT. A *dwelling unit* or *sleeping unit* in which a significant portion of the space includes a nonresidential use that is operated by the tenant.

DRAFT

[BS] LIVE LOAD. A *load* produced by the use and occupancy of the building or other structure that does not include construction or environmental *loads* such as wind load, snow load, rain load, earthquake load, flood load or *dead load*.

[BS] LIVE LOAD, ROOF. A *load* on a roof produced:

1. During maintenance by workers, equipment and materials;
2. During the life of the structure by movable objects such as planters or other similar small decorative appurtenances that are not occupancy related; or
3. By the use and occupancy of the roof such as for roof gardens or assembly areas.

[BS] LOAD AND RESISTANCE FACTOR DESIGN (LRFD). A method of proportioning structural members and their connections using load and *resistance factors* such that no applicable *limit state* is reached when the structure is subjected to appropriate *load* combinations. The term "LRFD" is used in the design of steel and wood structures.

[BS] LOAD EFFECTS. Forces and deformations produced in structural members by the applied *loads*.

[BS] LOAD FACTOR. A factor that accounts for deviations of the actual *load* from the *nominal load*, for uncertainties in the analysis that transforms the *load* into a *load effect*, and for the probability that more than one extreme *load* will occur simultaneously.

[BS] LOADS. Forces or other actions that result from the weight of building materials, occupants and their possessions, environmental effects, differential movement and restrained dimensional changes. Permanent loads are those loads in which variations over time are rare or of small magnitude, such as *dead loads*. All other loads are variable loads (see "*Nominal loads*").

[BG] LODGING HOUSE. A one-family dwelling where one or more occupants are primarily permanent in nature and rent is paid for guest rooms.

[A] LOT. A portion or parcel of land considered as a unit.

[A] LOT LINE. A line dividing one lot from another, or from a street or any public place.

[BE] LOW-ENERGY POWER-OPERATED DOOR. A swinging, sliding or folding door that opens automatically upon an action by a pedestrian such as pressing a push plate or waving a hand in front of a sensor. The door closes automatically, and operates with decreased forces and decreased speeds (see "Power-assisted door" and "Power-operated door").

[F] LOWER FLAMMABLE LIMIT (LFL). The minimum concentration of vapor in air at which propagation of flame will occur in the presence of an ignition source. The LFL is sometimes referred to as "LEL" or "lower explosive limit."

[BS] LOWEST FLOOR. The lowest floor of the lowest enclosed area, including *basement*, but excluding any unfinished or flood-resistant enclosure, usable solely for vehicle parking, building access or limited storage provided that such enclosure is not built so as to render the structure in violation of Section 1612.

[W] MAILBOXES. Receptacles for the receipt of documents, packages or other deliverable matter. *Mailboxes* include, but are not limited to, post office boxes and receptacles provided by commercial mail-receiving agencies, apartment houses and schools.

[BS] MAIN WINDFORCE-RESISTING SYSTEM. An assemblage of structural elements assigned to provide support and stability for the overall structure. The system generally receives wind loading from more than one surface

MALL BUILDING, COVERED and MALL BUILDING, OPEN. See "Covered mall building."

[F] MANUAL FIRE ALARM BOX. A manually operated device used to initiate an *alarm signal*.

[A] MANUFACTURER'S DESIGNATION. An identification applied on a product by the manufacturer indicating that a product or material complies with a specified standard or set of rules (see "*Label*" and "*Mark*").

MARINA. A facility, generally on the waterfront, that stores and services boats in berths, on moorings, and in dry storage or dry stack storage.

[A] MARK. An identification applied on a product by the manufacturer indicating the name of the manufacturer and the function of a product or material (see "*Label*" and "Manufacturer's designation").

[BG] MARQUEE. ((~~A *canopy* that has a top surface which is sloped less than 25 degrees from the horizontal and is located less than 10 feet (3048 mm) from operable openings above or adjacent to the level of the marquee.~~)) *Marquees* are a type of *canopy*. See "canopy".

[BS] MASONRY. A built-up construction or combination of building units or materials of clay, shale, concrete, glass, gypsum, stone or other *approved* units bonded together with or without *mortar* or grout or other accepted methods of joining.

Glass unit masonry. Masonry composed of glass units bonded by *mortar*.

Plain masonry. Masonry in which the tensile resistance of the masonry is taken into consideration and the effects of stresses in reinforcement are neglected.

Reinforced masonry. Masonry construction in which reinforcement acting in conjunction with the masonry is used to resist forces.

DRAFT

Solid masonry. Masonry consisting of solid masonry units laid contiguously with the *joints* between the units filled with *mortar*.

Unreinforced (plain) masonry. Masonry in which the tensile resistance of masonry is taken into consideration and the resistance of the reinforcing steel, if present, is neglected.

[BS] MASONRY UNIT. *Brick*, tile, stone, glass block or concrete block conforming to the requirements specified in Section 2103.

Hollow. A masonry unit whose net cross-sectional *area* in any plane parallel to the load-bearing surface is less than 75 percent of its gross cross-sectional *area* measured in the same plane.

Solid. A masonry unit whose net cross-sectional *area* in every plane parallel to the load-bearing surface is 75 percent or more of its gross cross-sectional *area* measured in the same plane.

[W] MASS TIMBER. Structural elements of Type IV construction primarily of solid, built-up, panelized or engineered wood products that meet minimum cross section dimensions of Type IV construction.

[BF] MASTIC FIRE-RESISTANT COATINGS. Liquid mixture applied to a substrate by brush, roller, spray or trowel that provides fire-resistant protection of a substrate when exposed to flame or intense heat.

[BE] MEANS OF EGRESS. A continuous and unobstructed path of vertical and horizontal egress travel from any occupied portion of a building or structure to a *public way*. A means of egress consists of three separate and distinct parts: the *exit access*, the *exit* and the *exit discharge*.

[BG] MECHANICAL-ACCESS OPEN PARKING GARAGES. *Open parking garages* employing parking machines, lifts, elevators or other mechanical devices for vehicles moving from and to street level and in which public occupancy is prohibited above the street level.

[BF] MECHANICAL EQUIPMENT SCREEN. A rooftop structure, not covered by a roof, used to aesthetically conceal plumbing, electrical or mechanical equipment from view.

[BG] MEDICAL CARE. Care involving medical or surgical procedures, nursing or for psychiatric purposes.

[BG] MEMBRANE-COVERED CABLE STRUCTURE. A nonpressurized structure in which a mast and cable system provides support and tension to the membrane weather barrier and the membrane imparts stability to the structure.

[BG] MEMBRANE-COVERED FRAME STRUCTURE. A nonpressurized building wherein the structure is composed of a rigid framework to support a tensioned membrane which provides the weather barrier.

[BF] MEMBRANE PENETRATION. A breach in one side of a floor-ceiling, roof-ceiling or wall assembly to accommodate an item installed into or passing through the breach.

[BF] MEMBRANE-PENETRATION FIRESTOP. A material, device or construction installed to resist for a prescribed time period the passage of flame and heat through openings in a protective membrane in order to accommodate cables, cable trays, conduit, tubing, pipes or similar items.

[BF] MEMBRANE-PENETRATION FIRESTOP SYSTEM. An assemblage consisting of a fire-resistance-rated floor-ceiling, roof-ceiling or wall assembly, one or more penetrating items installed into or passing through the breach in one side of the assembly and the materials or devices, or both, installed to resist the spread of fire into the assembly for a prescribed period of time.

[BE] MERCHANDISE PAD. A merchandise pad is an area for display of merchandise surrounded by *aisles*, permanent fixtures or walls. Merchandise pads contain elements such as nonfixed and moveable fixtures, cases, racks, counters and partitions as indicated in Section 105.2 from which customers browse or shop.

[BF] METAL COMPOSITE MATERIAL (MCM). A factory-manufactured panel consisting of metal skins bonded to both faces of a solid plastic core.

[BF] METAL COMPOSITE MATERIAL (MCM) SYSTEM. An *exterior wall covering* fabricated using MCM in a specific assembly including *joints*, seams, attachments, substrate, framing and other details as appropriate to a particular design.

[BS] METAL ROOF PANEL. An interlocking metal sheet having a minimum installed weather exposure of 3 square feet (0.279 m^2) per sheet.

[BS] METAL ROOF SHINGLE. An interlocking metal sheet having an installed weather exposure less than 3 square feet (0.279 m^2) per sheet.

[BG] MEZZANINE. An intermediate level or levels between the floor and ceiling of any *story* and in accordance with Section 505.

[BS] MICROPILE. A micropile is a bored, grouted-in-place *deep foundation* element that develops its load-carrying capacity by means of a bond zone in soil, bedrock or a combination of soil and bedrock.

DRAFT

[BF] MINERAL BOARD. A rigid felted thermal insulation board consisting of either felted *mineral fiber* or cellular beads of expanded aggregate formed into flat rectangular units.

[BF] MINERAL FIBER. Insulation composed principally of fibers manufactured from rock, slag or glass, with or without binders.

[BF] MINERAL WOOL. Synthetic vitreous fiber insulation made by melting predominately igneous rock or furnace slag, and other inorganic materials, and then physically forming the melt into fibers.

[BS] MODIFIED BITUMEN ROOF COVERING. One or more layers of polymer-modified asphalt sheets. The sheet materials shall be fully adhered or mechanically attached to the substrate or held in place with an *approved* ballast layer.

[BS] MORTAR. A mixture consisting of cementitious materials, fine aggregates, water, with or without admixtures, that is used to construct unit masonry assemblies.

[BS] MORTAR, SURFACE-BONDING. A mixture to bond concrete *masonry units* that contains hydraulic cement, glass fiber reinforcement with or without inorganic fillers or organic modifiers and water.

[BE] MULTILEVEL ASSEMBLY SEATING. Seating that is arranged in distinct levels where each level is comprised of either multiple rows, or a single row of box seats accessed from a separate level.

[F] MULTIPLE-STATION ALARM DEVICE. Two or more single-station alarm devices that can be interconnected such that actuation of one causes all integral or separate audible alarms to operate. A multiple-station alarm device can consist of one single-station alarm device having connections to other detectors or to a *manual fire alarm box*.

[F] MULTIPLE-STATION SMOKE ALARM. Two or more single-station alarm devices that are capable of interconnection such that actuation of one causes the appropriate *alarm signal* to operate in all interconnected alarms.

[BE] MULTISTORY UNIT. A *dwelling unit* or *sleeping unit* with *habitable space* located on more than one *story*.

[BS] NAILING, BOUNDARY. A special nailing pattern required by design at the boundaries of *diaphragms*.

[BS] NAILING, EDGE. A special nailing pattern required by design at the edges of each panel within the assembly of a *diaphragm* or *shear wall*.

[BS] NAILING, FIELD. Nailing required between the sheathing panels and framing members at locations other than *boundary nailing* and *edge nailing*.

[BS] NATURALLY DURABLE WOOD. The heartwood of the following species except for the occasional piece with corner sapwood, provided 90 percent or more of the width of each side on which it occurs is heartwood.

Decay resistant. Redwood, cedar, black locust and black walnut.

Termite resistant. Redwood, Alaska yellow cedar, Eastern red cedar and Western red cedar.

[BS] NOMINAL LOADS. The magnitudes of the *loads* specified in Chapter 16 (dead, live, soil, wind, snow, rain, *flood* and earthquake).

[BS] NOMINAL SIZE (LUMBER). The commercial size designation of width and depth, in standard sawn lumber and glued-laminated lumber *grades*; somewhat larger than the standard net size of dressed lumber, in accordance with DOCPS 20 for sawn lumber and with the ANSI/AWC NDS for glued-laminated lumber.

[BG] NONCOMBUSTIBLE MEMBRANE STRUCTURE. A membrane structure in which the membrane and all component parts of the structure are noncombustible.

[W] NONCOMBUSTIBLE PROTECTION FOR MASS TIMBER. Noncombustible material, in accordance with Section 703.5, designed to increase the fire-resistance rating and delay the combustion of mass timber.

NON-PRODUCTION LABORATORY FACILITY. A facility where the containers used for reactions, transfers, and other handling of chemicals are designed to be easily and safely manipulated by one person. It is a workplace where chemicals are used or synthesized on a nonproduction basis.

[BS] NONSTRUCTURAL CONCRETE. Any element made of plain or reinforced concrete that is not part of a structural system required to transfer either gravity or lateral loads to the ground.

NONSTRUCTURAL TRIM. The moldings, battens, caps, nailing strips, latticing or cutouts which are attached to the *sign structure*.

[F] NORMAL TEMPERATURE AND PRESSURE (NTP). A temperature of 70°F (21°C) and a pressure of 1 atmosphere [14.7 psia (101 kPa)].

[BE] NOSING. The leading edge of treads of *stairs* and of landings at the top of *stairway flights*.

NOTIFICATION ZONE. See "Zone, notification."

[F] NUISANCE ALARM. An alarm caused by mechanical failure, malfunction, improper installation or lack of proper maintenance, or an alarm activated by a cause that cannot be determined.

DRAFT

Class 2. An oxidizer that will cause a moderate increase in the burning rate of combustible materials with which it comes in contact.

Class 1. An oxidizer that does not moderately increase the burning rate of combustible materials.

[F] OXIDIZING GAS. A gas that can support and accelerate combustion of other materials more than air does.

[BS] PANEL (PART OF A STRUCTURE). The section of a floor, wall or roof comprised between the supporting frame of two adjacent rows of columns and girders or column bands of floor or roof construction.

[BE] PANIC HARDWARE. A door-latching assembly incorporating a device that releases the latch upon the application of a force in the direction of egress travel. See "Fire exit hardware."

[BS] PARTICLEBOARD. A generic term for a panel primarily composed of cellulosic materials (usually wood), generally in the form of discrete pieces or particles, as distinguished from fibers. The cellulosic material is combined with synthetic resin or other suitable bonding system by a process in which the interparticle bond is created by the bonding system under heat and pressure.

[BF] PENETRATION FIRESTOP. A through-penetration firestop or a *membrane-penetration firestop*.

[BG] PENTHOUSE. An enclosed, unoccupied rooftop structure used for sheltering mechanical and electrical equipment, tanks, elevators and related machinery, and vertical *shaft* openings.

[BS] PERFORMANCE CATEGORY. A designation of wood structural panels as related to the panel performance used in Chapter 23.

[A] PERMIT. An official document or certificate issued by the *building official* that authorizes performance of a specified activity.

[A] PERSON. An individual, ((~~heirs, executors, administrators or assigns, and also includes a~~)) receiver, administrator, executor, assignee, trustee in bankruptcy, trust estate, firm, partnership, ((~~or~~)) joint venture, club, company, joint stock company, business trust, municipal corporation, political subdivision of the State of Washington, the State of Washington and any instrumentality thereof, corporation, ((~~its or their successors or assigns, or the agent of any of the aforesaid~~)) limited liability company, association, society or any group of individuals acting as a unit, whether mutual, cooperative, fraternal, nonprofit or otherwise, and the United States or any instrumentality thereof.

[BG] PERSONAL CARE SERVICE. The care of persons who do not require *medical care*. Personal care involves responsibility for the safety of the persons while inside the building

[BE] PHOTOLUMINESCENT. Having the property of emitting light that continues for a length of time after excitation by visible or invisible light has been removed.

[BS] PHOTOVOLTAIC MODULE. A complete, environmentally protected unit consisting of solar cells, optics and other components, exclusive of tracker, designed to generate DC power when exposed to sunlight.

[BS] PHOTOVOLTAIC PANEL. A collection of modules mechanically fastened together, wired and designed to provide a field-installable unit.

[BS] PHOTOVOLTAIC PANEL SYSTEM. A system that incorporates discrete photovoltaic panels, that converts solar radiation into electricity, including rack support systems.

[BS] PHOTOVOLTAIC SHINGLES. A *roof covering* resembling shingles that incorporates photovoltaic modules.

[F] PHYSICAL HAZARD. A chemical for which there is evidence that it is a *combustible liquid*, *cryogenic fluid*, *explosive*, flammable (*solid*, *liquid* or gas), *organic peroxide* (*solid* or *liquid*), *oxidizer* (*solid* or *liquid*), *oxidizing gas*, *pyrophoric* (*solid*, *liquid* or gas), *unstable (reactive) material* (*solid*, *liquid* or gas) or *water-reactive material* (*solid* or *liquid*).

[F] PHYSIOLOGICAL WARNING THRESHOLD LEVEL. A concentration of airborne contaminants, normally expressed in parts per million (ppm) or milligrams per cubic meter (mg/m^3), that represents the concentration at which persons can sense the presence of the contaminant due to odor, irritation or other quick-acting physiological response. When used in conjunction with the permissible exposure limit (PEL) the physiological warning threshold levels are those consistent with the classification system used to establish the PEL. See the definition of "Permissible exposure limit (PEL)" in the *International Fire Code*.

PIER. A structure, usually of greater length than width, of timber, stone, concrete or other material, having a deck and projecting from the shore into waters so that boats may be moored alongside for loading, unloading, storage, repairs or commercial uses.

PLACE OF RELIGIOUS WORSHIP. See "Religious worship, place of."

[BF] PLASTIC, APPROVED. Any thermoplastic, thermosetting or reinforced thermosetting plastic material that conforms to combustibility classifications specified in the section applicable to the application and plastic type.

[BF] PLASTIC COMPOSITE. A generic designation that refers to wood/plastic composites, plastic lumber and similar materials.

DRAFT

[BF] PLASTIC GLAZING. Plastic materials that are glazed or set in a frame or sash.

[BF] PLASTIC LUMBER. A manufactured product made primarily of plastic materials (filled or unfilled) which is generally rectangular in cross section.

[BG] PLATFORM. A raised area within a building used for worship, the presentation of music, plays or other entertainment; the head table for special guests; the raised area for lecturers and speakers; boxing and wrestling rings; theater-in-the-round *stages*; and similar purposes wherein, other than horizontal sliding curtains, there are no overhead hanging curtains, drops, scenery or stage effects other than lighting and sound. A temporary platform is one installed for not more than 30 days.

[BF] POLYPROPYLENE SIDING. A shaped material, made principally from polypropylene homopolymer, or copolymer, which in some cases contains fillers or reinforcements, that is used to clad *exterior walls* of buildings.

[BS] PORCELAIN TILE. Tile that conforms to the requirements of ANSI A137.1.3, Section 3.0 for ceramic tile having an absorption of 0.5 percent or less in accordance with ANSI A137.1, Section 4.1 and Section 6.1 Table 10.

[W] PORTABLE SCHOOL CLASSROOM. A prefabricated structure consisting of one or more rooms with direct exterior egress from the classroom(s). The structure is transportable in one or more sections and is designed to be used as an educational space with or without a permanent foundation. The structure shall be capable of being demounted and relocated to other locations as needs arise.

[BS] POSITIVE ROOF DRAINAGE. The drainage condition in which consideration has been made for all loading deflections of the *roof deck*, and additional slope has been provided to ensure drainage of the roof within 48 hours of precipitation.

[BE] POWER-ASSISTED DOOR. Swinging door which opens by reduced pushing or pulling force on the door-operating hardware. The door closes automatically after the pushing or pulling force is released and functions with decreased forces. See "Low-energy power-operated door" and "Power-operated door."

[BE] POWER-OPERATED DOOR. Swinging, sliding, or folding door which opens automatically when approached by a pedestrian or opens automatically upon an action by a pedestrian. The door closes automatically and includes provisions such as presence sensors to prevent entrapment. See "Low energy power-operated door" and "Power-assisted door."

[BS] PREFABRICATED WOOD I-JOIST. Structural member manufactured using sawn or structural composite lumber flanges and wood structural panel webs bonded together with exterior exposure adhesives, which forms an "I" cross-sectional shape.

[BS] PRESTRESSED MASONRY. *Masonry* in which internal stresses have been introduced to counteract potential tensile stresses in *masonry* resulting from applied *loads*.

[BG] PRIMARY STRUCTURAL FRAME. The primary structural frame shall include all of the following structural members:

1. The columns.
2. Structural members having direct connections to the columns, including girders, beams, trusses and spandrels.
3. Members of the floor construction and roof construction having direct connections to the columns.
4. Bracing members that are essential to the vertical stability of the primary structural frame under gravity loading shall be considered part of the primary structural frame whether or not the bracing member carries gravity *loads*.

[BG] PRIVATE GARAGE. A building or portion of a building in which motor vehicles used by the owner or tenants of the building or buildings on the premises are stored or kept, without provisions for repairing or servicing such vehicles for profit.

PRIVATE TRANSFORMER VAULT. A vault that contains transformer equipment that is not owned by Seattle City Light or other electric power utility.

PROJECTING SIGN. A sign other than a wall sign, which projects from and is supported by a wall of a building or structure.

[BG] PROSCENIUM WALL. The wall that separates the *stage* from the auditorium or assembly seating area.

PSYCHIATRIC HOSPITALS. See "Hospitals."

[BE] PUBLIC ENTRANCE. An entrance that is not a *service entrance* or a *restricted entrance*.

[A] PUBLIC WAY. A street, alley or other parcel of land open to the outside air leading to a street, that has been deeded, dedicated or otherwise permanently appropriated to the public for public use and which has a clear width and height of not less than 10 feet (3048 mm).

[BE] PUBLIC-USE AREAS. Interior or exterior rooms or spaces that are made available to the general public.

[F] PYROPHORIC. A chemical with an auto-ignition temperature in air, at or below a temperature of 130°F (54.4°C).

[F] PYROTECHNIC COMPOSITION. A chemical mixture that produces visible light displays or sounds through a self-propagating, heat-releasing chemical reaction which is initiated by ignition.

[BF] RADIANT BARRIER. A material having a low-emittance surface of 0.1 or less installed in building assemblies.

DRAFT

[BE] RAMP. A walking surface that has a running slope steeper than one unit vertical in 20 units horizontal (5-percent slope).

RAMP, EXIT ACCESS. See "Exit access ramp."

RAMP, EXTERIOR EXIT. See "Exterior exit ramp."

RAMP, INTERIOR EXIT. See "Interior exit ramp."

[BG] RAMP-ACCESS OPEN PARKING GARAGES. *Open parking garages* employing a series of continuously rising floors or a series of interconnecting ramps between floors permitting the movement of vehicles under their own power from and to the street level.

[A] RECORD DRAWINGS. Drawings ("as builts") that document the location of all devices, appliances, wiring sequences, wiring methods and connections of the components of a *fire alarm system* as installed.

[BF] REFLECTIVE PLASTIC CORE INSULATION. An insulation material packaged in rolls, that is less than 1/2 inch (12.7 mm) thick, with not less than one exterior low-emittance surface (0.1 or less) and a core material containing voids or cells.

[A] REGISTERED DESIGN PROFESSIONAL. An individual who is registered or licensed to practice their respective design profession as defined by the statutory requirements of the professional registration laws of the state or *jurisdiction* in which the project is to be constructed.

[A] REGISTERED DESIGN PROFESSIONAL IN RESPONSIBLE CHARGE. A *registered design professional* engaged by the owner or the owner's authorized agent to review and coordinate certain aspects of the project, as determined by the *building official*, for compatibility with the design of the building or structure, including submittal documents prepared by others, deferred submittal documents and phased submittal documents.

[BG] RELIGIOUS WORSHIP, PLACE OF. A building or portion thereof intended for the performance of religious services.

[A] RELOCATABLE BUILDING. A partially or completely assembled building constructed and designed to be reused multiple times and transported to different building sites.

[A] REPAIR. The reconstruction, replacement or renewal of any part of an existing building for the purpose of its maintenance or to correct damage.

[BG] REPAIR GARAGE. ((~~A building, structure or portion thereof used for servicing or repairing motor vehicles.~~))

Major repair garage. A building or portions of a building where major repairs, such as engine overhauls, painting, body and fender work, and repairs that require draining of the motor vehicle fuel tank are performed on motor vehicles, including associated floor space used for offices, parking, or showrooms.

Minor repair garage. A building or portions of a building used for lubrication, inspection, and minor automotive maintenance work, such as engine tune-ups, replacement of parts, fluid changes (e.g., oil, antifreeze, transmission fluid, brake fluid, air conditioning refrigerants, etc.), brake system repairs, tire rotation, and similar routine maintenance work, including associated floor space used for offices, parking, or showrooms.

[BS] REROOFING. The process of recovering or replacing an existing *roof covering*. See "Roof recover" and "Roof replacement."

[BG] RESIDENTIAL AIRCRAFT HANGAR. An accessory building less than 2,000 square feet (186 m^2) and 20 feet (6096 mm) in *building height* constructed on a one- or two-family property where aircraft are stored. Such use will be considered as a residential accessory use incidental to the dwelling.

[W[RESIDENTIAL SLEEPING SUITES. A unit that provides multiple rooms or spaces for up to five residents, includes provisions for sleeping and can include provisions for living, eating, sanitation, and kitchen facilities.

[BS] RESISTANCE FACTOR. A factor that accounts for deviations of the actual strength from the *nominal strength* and the manner and consequences of failure (also called "strength reduction factor").

[BE] RESTRICTED ENTRANCE. An entrance that is made available for *common use* on a controlled basis, but not public use, and that is not a *service entrance*.

((~~**[BG] RETRACTABLE AWNING.** A retractable *awning* is a cover with a frame that retracts against a building or other structure to which it is entirely supported.~~))

[BS] RISK CATEGORY. A categorization of buildings and other structures for determination of *flood*, wind, snow, ice and earthquake *loads* based on the risk associated with unacceptable performance.

[BS] RISK-TARGETED MAXIMUM CONSIDERED EARTHQUAKE (MCE_R) GROUND MOTION RESPONSE ACCELERATIONS. The most severe earthquake effects considered by this code, determined for the orientation that results in the largest maximum response to horizontal ground motions and with adjustment for targeted risk.

[BS] ROOF ASSEMBLY (For application to Chapter 15 only). A system designed to provide weather protection and resistance to design *loads*. The system consists of a *roof covering* and *roof deck* or a single component serving as both the roof covering and the *roof deck*. A roof assembly can include an underlayment, a thermal barrier, insulation or a *vapor retarder*.

DRAFT

[BS] ROOF COATING. A fluid-applied, adhered coating used for roof maintenance or *roof repair*, or as a component of a *roof covering system* or *roof assembly*.

[BS] ROOF COVERING. The covering applied to the *roof deck* for weather resistance, fire classification or appearance.

ROOF COVERING SYSTEM. See "Roof assembly."

[BS] ROOF DECK. The flat or sloped surface constructed on top of the *exterior walls* of a building or other supports for the purpose of enclosing the *story* below, or sheltering an area, to protect it from the elements, not including its supporting members or vertical supports.

ROOF DRAINAGE, POSITIVE. See "Positive roof drainage."

[BS] ROOF RECOVER. The process of installing an additional *roof covering* over a prepared existing *roof covering* without removing the existing *roof covering*.

[BS] ROOF REPAIR. Reconstruction or renewal of any part of an existing roof for the purposes of correcting damage or restoring pre-damage condition.

[BS] ROOF REPLACEMENT. The process of removing the existing *roof covering*, repairing any damaged substrate and installing a new *roof covering*.

ROOF SIGN. A sign erected upon or above a roof or parapet of a building or structure.

[BG] ROOF VENTILATION. The natural or mechanical process of supplying conditioned or unconditioned air to, or removing such air from, *attics*, cathedral ceilings or other enclosed spaces over which a *roof assembly* is installed.

[BG] ROOFTOP STRUCTURE. A structure erected on top of the *roof deck* or on top of any part of a building.

[BS] RUNNING BOND. The placement of *masonry units* such that *head joints* in successive courses are horizontally offset at least one-quarter the unit length.

[BG] SALLYPORT. A security vestibule with two or more doors or gates where the intended purpose is to prevent continuous and unobstructed passage by allowing the release of only one door or gate at a time.

[BE] SCISSOR STAIRWAY. Two interlocking *stairways* providing two separate paths of egress located within one *exit* enclosure.

[BS] SCUPPER. An opening in a wall or parapet that allows water to drain from a roof.

[BG] SECONDARY MEMBERS. The following structural members shall be considered secondary members and not part of the *primary structural frame*:

1. Structural members not having direct connections to the columns.
2. Members of the floor construction and roof construction not having direct connections to the columns.
3. Bracing members other than those that are part of the *primary structural frame*.

Interpretation I202S: A *secondary member* (component or subsystem) is a structurally significant portion of the building that is supported by the *primary structural frame*, but which does not contribute to the strength or stability of the primary structure. *Secondary members* have internal structural integrity to perform their function and have their interactions with and attachments to, the *primary structural frame* analyzed and designed to assure proper integration within the total structure.

[BS] SEISMIC DESIGN CATEGORY. A classification assigned to a structure based on its *risk category* and the severity of the *design earthquake ground motion* at the site.

[BS] SEISMIC FORCE-RESISTING SYSTEM. That part of the structural system that has been considered in the design to provide the required resistance to the prescribed seismic forces.

[BF] SELF-CLOSING. As applied to a *fire door* or other opening protective, means equipped with an device that will ensure closing after having been opened.

[BE] SELF-LUMINOUS. Illuminated by a self-contained power source, other than batteries, and operated independently of external power sources.

SELF-PRESERVATION, INCAPABLE OF. See "Incapable of self-preservation."

[BG] SELF-SERVICE STORAGE FACILITY. Real property designed and used for the purpose of renting or leasing individual storage spaces to customers for the purpose of storing and removing personal property on a self-service basis.

[F] SERVICE CORRIDOR. A fully enclosed passage used for transporting *HPM* and purposes other than required *means of egress*.

[BE] SERVICE ENTRANCE. An entrance intended primarily for delivery of goods or services.

[BF] SHAFT. An enclosed space extending through one or more *stories* of a building, connecting vertical openings in successive floors, or floors and roof.

DRAFT

[BF] SHAFT ENCLOSURE. The walls or construction forming the boundaries of a *shaft*.

[BS] SHALLOW FOUNDATION. A shallow foundation is an individual or strip footing, a mat foundation, a slab-on-grade foundation or a similar foundation element.

[BS] SHEAR WALL (for Chapter 23). A wall designed to resist lateral forces parallel to the plane of a wall.

Shear wall, perforated. A wood structural panel sheathed wall with openings, that has not been specifically designed and detailed for force transfer around openings.

Shear wall segment, perforated. A section of shear wall with full-height sheathing that meets the height-to-width ratio limits of Section 4.3.4 of AWC SDPWS.

[BS] SHINGLE FASHION. A method of installing roof or wall coverings, water-resistive barriers, flashing or other building components such that upper layers of material are placed overlapping lower layers of material to provide for drainage via gravity and moisture control.

SIGN STRUCTURE. Any structure which supports or is designed to support any *display surface*.

[BS] SINGLE-PLY MEMBRANE. A roofing membrane that is field applied using one layer of membrane material (either homogeneous or composite) rather than multiple layers.

[F] SINGLE-STATION SMOKE ALARM. An assembly incorporating the detector, the control equipment and the alarm-sounding device in one unit, operated from a power supply either in the unit or obtained at the point of installation.

[BG] SITE. A parcel of land bounded by a *lot line* or a designated portion of a public right-of-way.

[BS] SITE CLASS. A classification assigned to a site based on the types of soils present and their engineering properties as defined in Section 1613.2.2.

[BS] SITE COEFFICIENTS. The values of F_a and F_v indicated in Tables 1613.2.3(1) and 1613.2.3(2), respectively.

[BG] SITE-FABRICATED STRETCH SYSTEM. A system, fabricated on site and intended for acoustical, tackable or aesthetic purposes, that is composed of three elements:

1. A frame (constructed of plastic, wood, metal or other material) used to hold fabric in place.
2. A core material (infill, with the correct properties for the application).
3. An outside layer, composed of a textile, fabric or vinyl, that is stretched taut and held in place by tension or mechanical fasteners via the frame.

[BS] SKYLIGHT, UNIT. A factory-assembled, glazed fenestration unit, containing one panel of glazing material that allows for natural lighting through an opening in the *roof assembly* while preserving the weather-resistant barrier of the roof.

[BS] SKYLIGHTS AND SLOPED GLAZING. Glass or other transparent or translucent glazing material installed at a slope of 15 degrees (0.26 rad) or more from vertical. Unit skylights, *tubular daylighting devices*, glazing materials, solariums, sunrooms, roofs and sloped walls are included in this definition.

[A] SLEEPING UNIT. A single unit that provides rooms or spaces for one or more persons, includes permanent provisions for sleeping and can include provisions for living, eating and either sanitation or kitchen facilities but not both. Such rooms and spaces that are also part of a dwelling unit are not sleeping units.

SLIP. A berthing space between or adjacent to *piers*, wharves, or docks; the water areas associated with boat moorage.

[W] SMALL BUSINESS. Any business entity (including a sole proprietorship, corporation, partnership or other legal entity) which is owned and operated independently from all other businesses, which has the purpose of making a profit, and which has 50 or fewer employees.

[F] SMOKE ALARM. A single- or multiple-station alarm responsive to smoke. See "Multiple-station smoke alarm" and "Single-station smoke alarm."

[BF] SMOKE BARRIER. A continuous membrane, either vertical or horizontal, such as a wall, floor or ceiling assembly, that is designed and constructed to restrict the movement of smoke.

[BG] SMOKE COMPARTMENT. A space within a building enclosed by *smoke barriers* on all sides, including the top and bottom.

[BF] SMOKE DAMPER. A *listed* device installed in ducts and air transfer openings designed to resist the passage of smoke. The device is installed to operate *automatically*, controlled by a smoke detection system, and where required, is capable of being positioned from a *fire command center*.

[F] SMOKE DETECTOR. A *listed* device that senses visible or invisible particles of combustion.

[BF] SMOKE PARTITION. A wall assembly that extends from the top of the foundation or floor below to the underside of the floor or roof sheathing, deck or slab above or to the underside of the ceiling above where the ceiling membrane is constructed to limit the transfer of smoke.

DRAFT

[BF] SMOKE-DEVELOPED INDEX. A comparative measure, expressed as a dimensionless number, derived from measurements of smoke obscuration versus time for a material tested in accordance with ASTM E84.

((~~**[BF] SMOKEPROOF ENCLOSURE.** An *exit stairway* or *ramp* designed and constructed so that the movement of the products of combustion produced by a fire occurring in any part of the building into the enclosure is limited.~~))

[BE] SMOKE-PROTECTED ASSEMBLY SEATING. Seating served by *means of egress* that is not subject to smoke accumulation within or under a structure for a specified design time by means of passive design or by mechanical ventilation.

[BG] SOFT CONTAINED PLAY EQUIPMENT STRUCTURE. A children's play structure containing one or more components where the user enters a play environment that utilizes pliable materials.

[F] SOLID. A material that has a melting point, decomposes or sublimes at a temperature greater than 68°F (20°C).

[BG] SPECIAL AMUSEMENT BUILDING. A special amusement building is any temporary or permanent building or portion thereof that is occupied for amusement, entertainment or educational purposes and that contains a device or system that conveys passengers or provides a walkway along, around or over a course in any direction so arranged that the *means of egress* path is not readily apparent due to visual or audio distractions or is intentionally confounded or is not readily available because of the nature of the attraction or mode of conveyance through the building or structure.

[BS] SPECIAL FLOOD HAZARD AREA. The land area subject to flood hazards and shown on a *Flood Insurance Rate Map* or other flood hazard map as Zone A, AE, A1-30, A99, AR, AO, AH, V, VO, VE or V1-30.

[BS] SPECIAL INSPECTION. Inspection of construction requiring the expertise of an *approved special inspector* in order to ensure compliance with this code and the *approved construction documents*.

Continuous special inspection. Special inspection by the *special inspector* who is present continuously when and where the work to be inspected is being performed.

Periodic special inspection. Special inspection by the *special inspector* who is intermittently present where the work to be inspected has been or is being performed.

[BS] SPECIAL INSPECTOR. A qualified person employed or retained by an *approved* agency and *approved* by the *building official* as having the competence necessary to inspect a particular type of construction requiring *special inspection.*

[BS] SPECIAL STRUCTURAL WALL. See Section 1905.1.1.

[BS] SPECIFIED COMPRESSIVE STRENGTH OF MASONRY, f'_m. Minimum compressive strength, expressed as force per unit of net cross-sectional area, required of the *masonry* used in construction by the *approved construction documents*, and upon which the project design is based. Whenever the quantity f'_m is under the radical sign, the square root of numerical value only is intended and the result has units of pounds per square inch (psi) (MPa).

[BF] SPLICE. The result of a factory and/or field method of joining or connecting two or more lengths of a *fire-resistant joint system* into a continuous entity.

SPORT ACTIVITY, AREA OF. See "Area of sport activity."

[F] SPRAY ROOM. A room designed to accommodate spraying operations.

[BF] SPRAYED FIRE-RESISTANT MATERIALS. Cementitious or fibrous materials that are sprayed to provide fire-resistant protection of the substrates.

[BG] STAGE. A space within a building utilized for entertainment or presentations, which includes overhead hanging curtains, drops, scenery or stage effects other than lighting and sound.

[W] STAGED EVACUATION. A method of emergency response that engages building components and trained staff to provide occupant safety during an emergency. Emergency response involves moving or holding certain occupants at temporary locations for a brief period of time before evacuating the building. This response is used by ambulatory surgery facility and *assisted living facilities* to protect the health and safety of fragile occupants and residents.

[BE] STAIR. A change in elevation, consisting of one or more risers.

[BE] STAIRWAY. One or more *flights* of *stairs*, either exterior or interior, with the necessary landings and platforms connecting them, to form a continuous and uninterrupted passage from one level to another.

STAIRWAY, EXIT ACCESS. See "Exit access stairway."

STAIRWAY, EXTERIOR EXIT. See "Exterior exit stairway."

STAIRWAY, INTERIOR EXIT. See "Interior exit stairway."

STAIRWAY, SCISSOR. See "Scissor stairway."

[BE] STAIRWAY, SPIRAL. A *stairway* having a closed circular form in its plan view with uniform section-shaped treads attached to and radiating from a minimum-diameter supporting column.

DRAFT

((~~**[F] STANDBY POWER SYSTEM.** A source of automatic electric power of a required capacity and duration to operate required building, hazardous materials or ventilation systems in the event of a failure of the primary power. Standby power systems are required for electrical loads where interruption of the primary power could create hazards or hamper rescue or fire-fighting operations.~~))

STANDBY POWER SYSTEM, LEGALLY REQUIRED. An electrical power system that complies with *Seattle Electrical Code* Article 701, Legally Required Standby Systems, and Chapter 27.

[F] STANDPIPE, TYPES OF. Standpipe types are as follows:

Automatic dry. A dry standpipe system, normally filled with pressurized air, that is arranged through the use of a device, such as dry pipe valve, to admit water into the system piping *automatically* upon the opening of a hose valve. The water supply for an *automatic* dry standpipe system shall be capable of supplying the system demand.

Automatic wet. A wet standpipe system that has a water supply that is capable of supplying the system demand *automatically*.

Manual dry. A dry standpipe system that does not have a permanent water supply attached to the system. Manual dry standpipe systems require water from a fire department pumper to be pumped into the system through the fire department connection in order to meet the system demand.

Manual wet. A wet standpipe system connected to a water supply for the purpose of maintaining water within the system but does not have a water supply capable of delivering the system demand attached to the system. Manual-wet standpipe systems require water from a fire department pumper (or the like) to be pumped into the system in order to meet the system demand.

Semiautomatic dry. A dry standpipe system that is arranged through the use of a device, such as a deluge valve, to admit water into the system piping upon activation of a remote control device located at a hose connection. A remote control activation device shall be provided at each hose connection. The water supply for a semiautomatic dry standpipe system shall be capable of supplying the system demand.

[F] STANDPIPE SYSTEM, CLASSES OF. Standpipe classes are as follows:

Class I system. A system providing 2-1/2-inch (64 mm) hose connections to supply water for use by fire departments and those trained in handling heavy fire streams.

Class II system. A system providing 1-1/2-inch (38 mm) hose stations to supply water for use primarily by the building occupants or by the fire department during initial response.

Class III system. A system providing 1-1/2-inch (38 mm) hose stations to supply water for use by building occupants and 2-1/2-inch (64 mm) hose connections to supply a larger volume of water for use by fire departments and those trained in handling heavy fire streams.

[BS] STEEL CONSTRUCTION, COLD-FORMED. That type of construction made up entirely or in part of *steel structural members* cold formed to shape from sheet or strip steel such as *roof deck*, floor and wall panels, studs, floor joists, roof joists and other structural elements.

[BS] STEEL ELEMENT, STRUCTURAL. Any *steel structural member* of a building or structure consisting of rolled shapes, pipe, hollow structural sections, plates, bars, sheets, rods or steel castings other than cold-formed steel or steel joist members.

[BS] STEEL JOIST. Any *steel structural member* of a building or structure made of hot-rolled or cold-formed solid or open-web sections, or riveted or welded bars, strip or sheet steel members, or slotted and expanded, or otherwise deformed rolled sections.

[BF] STEEP SLOPE. A roof slope greater than two units vertical in 12 units horizontal (17-percent slope).

[BS] STONE MASONRY. *Masonry* composed of field, quarried or *cast stone* units bonded by *mortar*.

[F] STORAGE, HAZARDOUS MATERIALS. The keeping, retention or leaving of hazardous materials in closed containers, tanks, cylinders, or similar vessels; or vessels supplying operations through closed connections to the vessel.

[BS] STORAGE RACKS. Cold-formed or hot-rolled steel structural members which are formed into steel storage racks, including pallet storage racks, movable-shelf racks, rack-supported systems, automated storage and retrieval systems (stacker racks), push-back racks, pallet-flow racks, case-flow racks, pick modules and rack-supported platforms. Other types of racks, such as drive-in or drive-through racks, cantilever racks, portable racks or racks made of materials other than steel, are not considered storage racks for the purpose of this code.

[BG] STORM SHELTER. A building, structure or portions thereof, constructed in accordance with ICC 500 and designated for use during a severe wind storm event, such as a hurricane or tornado.

Community storm shelter. A storm shelter not defined as a "Residential storm shelter."

Residential storm shelter. A storm shelter serving occupants of *dwelling units* and having an *occupant load* not exceeding 16 persons.

DRAFT

[BG] STORY. That portion of a building, ((~~included~~)) including basements, located between the upper surface of a floor and the upper surface of the next floor or roof ((~~next~~)) above (see "*Basement*," "*Building height*," "*Grade plane*" *and* "*Mezzanine*"). A story is measured as the vertical distance from top to top of two successive tiers of beams or finished floor surfaces and, for the topmost story, from the top of the floor finish to the top of the ceiling joists or, where there is not a ceiling, to the top of the roof rafters.

[BG] STORY ABOVE GRADE PLANE. Any *story* having its finished floor surface entirely above *grade plane*, or in which the finished surface of the next floor ((~~next~~)) above is:

1. More than 6 feet (1829 mm) above *grade plane*; or
2. More than 12 feet (3658 mm) above the finished ground level ((~~at any point~~)) for more than 25 feet (7620 mm) of the perimeter. Required driveways up to 22 feet (6706 mm) wide shall not be considered in calculating the 25 foot distance if there is at least 10 feet (3048 mm) between the driveway and all portions of the 25 foot area. See Figure 202S.

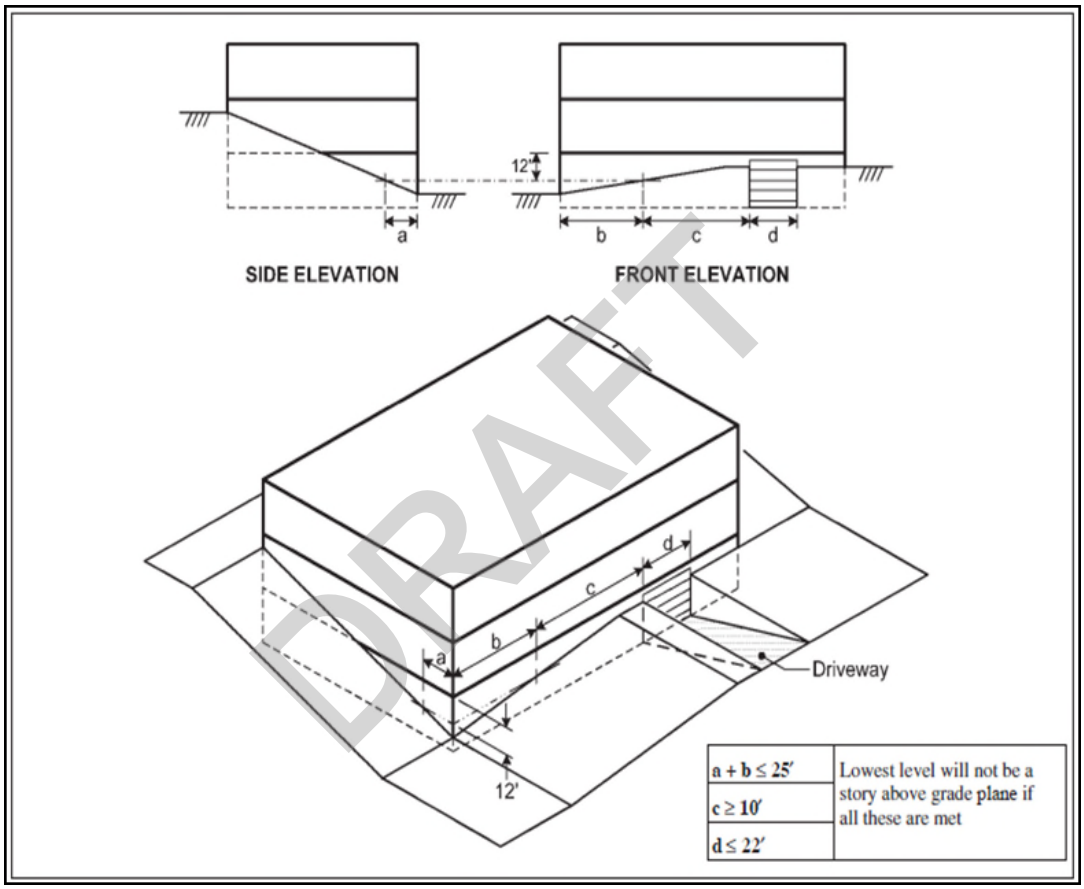

FIGURE 202S
STORY ABOVE GRADE PLANE

[BS] STRENGTH (For Chapter 21).

Design strength. Nominal strength multiplied by a strength reduction factor.

Nominal strength. Strength of a member or cross section calculated in accordance with these provisions before application of any strength-reduction factors.

Required strength. Strength of a member or cross section required to resist *factored loads*.

[BS] STRENGTH (for Chapter 16).

Nominal strength. The capacity of a structure or member to resist the effects of *loads*, as determined by computations using *specified* material strengths and dimensions and equations derived from accepted principles of structural mechanics or by field tests or laboratory tests of scaled models, allowing for modeling effects and differences between laboratory and field conditions.

Required strength. Strength of a member, cross section or connection required to resist *factored loads* or related internal moments and forces in such combinations as stipulated by these provisions.

Strength design. A method of proportioning structural members such that the computed forces produced in the members by *factored loads* do not exceed the member design strength [also called "*load and resistance factor design*" (LRFD)]. The term "strength design" is used in the design of concrete and *masonry* structural elements.

[BS] STRUCTURAL COMPOSITE LUMBER. Structural member manufactured using wood elements bonded together with exterior adhesives. Examples of structural composite lumber are:

Laminated strand lumber (LSL). A composite of wood strand elements with wood fibers primarily oriented along the length of the member, where the least dimension of the wood strand elements is 0.10 inch (2.54 mm) or less and their average lengths not less than 150 times the least dimension of the wood strand elements.

Laminated veneer lumber (LVL). A composite of wood *veneer* sheet elements with wood fibers primarily oriented along the length of the member, where the *veneer* element thicknesses are 0.25 inches (6.4 mm) or less.

Oriented strand lumber (OSL). A composite of wood strand elements with wood fibers primarily oriented along the length of the member, where the least dimension of the wood strand elements is 0.10 inches (2.54 mm) or less and their average lengths not less than 75 times and less than 150 times the least dimension of the strand elements.

Parallel strand lumber (PSL). A composite of wood strand elements with wood fibers primarily oriented along the length of the member where the least dimension of the wood strand elements is 0.25 inches (6.4 mm) or less and their average lengths not less than 300 times the least dimension of the wood strand elements.

STRUCTURAL ENGINEER IN RESPONSIBLE CHARGE. A structural engineer licensed to practice under the laws of the State of Washington who is engaged by the owner to review and coordinate structural design aspects of the project, as determined by the *building official*, for compatibility with the design of the building or structure, including submittal documents prepared by others, *deferred submittal* documents and phased submittal documents.

[BS] STRUCTURAL GLUED-LAMINATED TIMBER. An engineered, stress-rated product of a timber laminating plant, comprised of assemblies of specially selected and prepared wood laminations in which the grain of all laminations is approximately parallel longitudinally and the laminations are bonded with adhesives.

[BS] STRUCTURAL OBSERVATION. The visual observation of the structural system by a *registered design professional* for general conformance to the *approved construction documents*.

STRUCTURALLY QUALIFIED PRODUCTS. Products that have been prequalified based on current acceptance and certification by an accepted authority such as International Code Council (ICC), American Society for Testing and Materials (ASTM), American Concrete Institute (ACI), American Institute of Steel Construction (AISC), or others widely accepted in the engineering field.

[A] STRUCTURE. That which is built or constructed.

[BS] SUBSTANTIAL DAMAGE. Damage of any origin sustained by a structure whereby the cost of restoring the structure to its before-damaged condition would equal or exceed 50 percent of the market value of the structure before the damage occurred.

[BS] SUBSTANTIAL IMPROVEMENT. Any *repair*, reconstruction, rehabilitation, *alteration*, *addition* or other improvement of a building or structure, the cost of which, in any five-year period, equals or exceeds 50 percent of the market value of the structure before the improvement or repair is started. If the structure has sustained *substantial damage*, any *repairs* are considered substantial improvement regardless of the actual *repair* work performed. The term does not, however, include either:

1. Any project for improvement of a building required to correct existing health, sanitary or safety code violations identified by the *building official* and that are the minimum necessary to assure safe living conditions.
2. Any *alteration* of a historic structure provided that the *alteration* will not preclude the structure's continued designation as a historic structure.

➡ **SUBSTRUCTURE.** The portion of the construction below and including the deck immediately above the water.

[BG] SUNROOM. A one-*story* structure attached to a building with a glazing area in excess of 40 percent of the gross area of the structure's *exterior walls* and roof.

SUPERSTRUCTURE. The portion of construction above the deck.

Exception: *Covered boat moorage.*

[F] SUPERVISING STATION. A facility that receives signals and at which personnel are in attendance at all times to respond to these signals.

[F] SUPERVISORY SERVICE. The service required to monitor performance of guard tours and the operative condition of fixed suppression systems or other systems for the protection of life and property.

[F] SUPERVISORY SIGNAL. A signal indicating the need of action in connection with the supervision of guard tours, the fire suppression systems or equipment or the maintenance features of related systems.

DRAFT

mist, fume or dust, when administered by continuous inhalation for 1 hour (or less if death occurs within 1 hour) to albino rats weighing between 200 and 300 grams each.

[BG] TRANSIENT. Occupancy of a *dwelling unit* or *sleeping unit* for not more than 30 days.

[BG] TRANSIENT AIRCRAFT. Aircraft based at another location and that is at the transient location for not more than 90 days.

[W] TRANSIENT LODGING. A building, facility or portion thereof, excluding inpatient medical care facilities and long-term care facilities, that contains one or more *dwelling units* or sleeping units. Examples of *transient lodging* include, but are not limited to, resorts, group homes, hotels, motels, dormitories, homeless shelters, halfway houses and social service lodging.

[BS] TREATED WOOD. Wood products that are conditioned to enhance fire-retardant or preservative properties.

Fire-retardant-treated wood. Wood products that, when impregnated with chemicals by a pressure process or other means during manufacture, exhibit reduced surface-burning characteristics and resist propagation of fire.

Preservative-treated wood. Wood products that, conditioned with chemicals by a pressure process or other means, exhibit reduced susceptibility to damage by fungi, insects or marine borers.

[BF] TRIM. Picture molds, chair rails, baseboards, *handrails*, door and window frames and similar decorative or protective materials used in fixed applications.

[F] TROUBLE SIGNAL. A signal initiated by the *fire alarm system* or device indicative of a fault in a monitored circuit or component.

[BS] TSUNAMI DESIGN GEODATABASE. The ASCE database (version 2016-1.0) of Tsunami Design Zone maps and associated design data for the states of Alaska, California, Hawaii, Oregon and Washington.

[BS] TSUNAMI DESIGN ZONE. An area identified on the Tsunami Design Zone map between the shoreline and the inundation limit, within which certain structures designated in Chapter 16 are designed for or protected from inundation.

[BS] TUBULAR DAYLIGHTING DEVICE (TDD). A non-operable *fenestration* unit primarily designed to transmit daylight from a roof surface to an interior ceiling via a tubular conduit. The basic unit consists of an exterior glazed weathering surface, a light-transmitting tube with a reflective interior surface, and an interior-sealing device such as a translucent ceiling panel. The unit can be factory assembled, or field-assembled from a manufactured kit.

24-HOUR BASIS. See "24-hour basis" located preceding "AAC masonry."

[BE] TYPE A UNIT. A *dwelling unit* or *sleeping unit* designed and constructed for accessibility in accordance with this code and the provisions for *Type A units* in ICC A117.1.

[BE] TYPE B UNIT. A *dwelling unit* or *sleeping unit* designed and constructed for accessibility in accordance with this code and the provisions for *Type B units* in ICC A117.1, consistent with the design and construction requirements of the federal Fair Housing Act.

[F] UMBRELLA STRUCTURE. A structure, enclosure or shelter with or without sidewalls or drops, constructed of fabric or pliable material supported by a central pole or poles (see "Tent").

[BS] UNDERLAYMENT. One or more layers of a material that is applied to a steep-slope *roof covering* deck under the roof covering and resists liquid water that penetrates the roof covering.

UNIT SKYLIGHT. See "Skylight, unit."

UNSAFE. Structurally unsound, provided with inadequate egress, constituting a fire hazard, or otherwise dangerous to human life, or constituting a hazard to safety, health or public welfare.

[F] UNSTABLE (REACTIVE) MATERIAL. A material, other than an explosive, which in the pure state or as commercially produced, will vigorously polymerize, decompose, condense or become self-reactive and undergo other violent chemical changes, including *explosion*, when exposed to heat, friction or shock, or in the absence of an inhibitor, or in the presence of contaminants, or in contact with *incompatible materials*. Unstable (reactive) materials are subdivided as follows:

Class 4. Materials that in themselves are readily capable of *detonation* or explosive decomposition or explosive reaction at *normal temperatures and pressures*. This class includes materials that are sensitive to mechanical or localized thermal shock at *normal temperatures and pressures.*

Class 3. Materials that in themselves are capable of *detonation* or of explosive decomposition or explosive reaction but which require a strong initiating source or which must be heated under confinement before initiation. This class includes materials that are sensitive to thermal or mechanical shock at elevated temperatures and pressures.

Class 2. Materials that in themselves are normally unstable and readily undergo violent chemical change but do not detonate. This class includes materials that can undergo chemical change with rapid release of energy at *normal temperatures and pressures*, and that can undergo violent chemical change at elevated temperatures and pressures.

Class 1. Materials that in themselves are normally stable but which can become unstable at elevated temperatures and pressure.

DRAFT

[F] USE (MATERIAL). Placing a material into action, including *solids*, *liquids* and gases.

Interpretation I202U: Use, where otherwise mentioned in this code, is equivalent to character of occupancy and not intended to be construed as the definition of "use" in the *Land Use Code*.

UTILITY TRANSFORMER VAULT. A vault containing transformer equipment owned by Seattle City Light or other electric power utility.

[BF] VAPOR PERMEABLE. The property of having a moisture vapor permeance rating of 5 perms (2.9×10^{-10} kg/Pa × s × m^2) or greater, when tested in accordance with the desiccant method using Procedure A of ASTM E96. A vapor permeable material permits the passage of moisture vapor.

[BF] VAPOR RETARDER CLASS. A measure of a material or assembly's ability to limit the amount of moisture that passes through that material or assembly. Vapor retarder class shall be defined using the desiccant method with Procedure A of ASTM E96 as follows:

Class I: 0.1 perm or less.

Class II: 0.1 < perm ≤ 1.0 perm.

Class III: 1.0 < perm ≤ 10 perm.

[BS] VEGETATIVE ROOF. An assembly of interacting components designed to waterproof a building's top surface that includes, by design, vegetation and related landscape elements.

[BS] VEHICLE BARRIER. A component or a system of components, near open sides or walls of garage floors or ramps that act as a restraint for vehicles.

[BG] VEHICULAR GATE. A gate that is intended for use at a vehicular entrance or exit to a facility, building or portion thereof, and that is not intended for use by pedestrian traffic.

[BF] VENEER. A facing attached to a wall for the purpose of providing ornamentation, protection or insulation, but not counted as adding strength to the wall.

[M] VENTILATION. The natural or mechanical process of supplying conditioned or unconditioned air to, or removing such air from, any space.

[BF] VINYL SIDING. A shaped material, made principally from rigid polyvinyl chloride (PVC), that is used as an *exterior wall covering*.

[F] VISIBLE ALARM NOTIFICATION APPLIANCE. A notification appliance that alerts by the sense of sight.

[BG] WALKWAY, PEDESTRIAN. A walkway used exclusively as a pedestrian trafficway.

[BS] WALL (for Chapter 21). A vertical element with a horizontal length-to-thickness ratio greater than three, used to enclose space.

Cavity wall. A wall built of *masonry units* or of concrete, or a combination of these materials, arranged to provide an airspace within the wall, and in which the inner and outer parts of the wall are tied together with metal ties.

Dry-stacked, surface-bonded wall. A wall built of concrete *masonry units* where the units are stacked dry, without *mortar* on the bed or *head joints*, and where both sides of the wall are coated with a surface-bonding *mortar*.

Parapet wall. The part of any wall entirely above the roof line.

[W][BS] WALL, LOAD-BEARING. Any wall meeting either of the following classifications:

1. Any metal or wood stud wall that supports more than 100 pounds per linear foot (1459 N/m) of vertical load in addition to its own weight.
2. Any *masonry* or concrete wall, or mass timber wall that supports more than 200 pounds per linear foot (2919 N/m) of vertical load in addition to its own weight.

[BS] WALL, NONLOAD-BEARING. Any wall that is not a *load-bearing wall*.

[F] WATER-REACTIVE MATERIAL. A material that explodes; violently reacts; produces *flammable*, *toxic* or other hazardous gases; or evolves enough heat to cause autoignition or ignition of combustibles upon exposure to water or moisture. Water-reactive materials are subdivided as follows:

Class 3. Materials that react explosively with water without requiring heat or confinement.

Class 2. Materials that react violently with water or have the ability to boil water. Materials that produce *flammable*, *toxic* or other hazardous gases or evolve enough heat to cause autoignition or ignition of combustibles upon exposure to water or moisture.

Class 1. Materials that react with water with some release of energy, but not violently.

DRAFT

[BF] WATER-RESISTIVE BARRIER. A material behind an *exterior wall covering* that is intended to resist liquid water that has penetrated behind the exterior covering from further intruding into the *exterior wall* assembly.

[BF] WEATHER-EXPOSED SURFACES. Surfaces of walls, ceilings, floors, roofs, soffits and similar surfaces exposed to the weather except the following:

1. Ceilings and roof soffits enclosed by walls, fascia, bulkheads or beams that extend not less than 12 inches (305 mm) below such ceiling or roof soffits.
2. Walls or portions of walls beneath an unenclosed roof area, where located a horizontal distance from an open exterior opening equal to not less than twice the height of the opening.
3. Ceiling and roof soffits located a minimum horizontal distance of 10 feet (3048 mm) from the outer edges of the ceiling or roof soffits.

[F] WET-CHEMICAL EXTINGUISHING SYSTEM. A solution of water and potassium-carbonate-based chemical, potassium-acetate-based chemical or a combination thereof, forming an extinguishing agent.

WHARF. A structure or bulkhead constructed of wood, stone, concrete or similar material built at the shore of a harbor, lake or river for vessels to lie alongside of, and to anchor *piers* or floats.

[BE] WHEELCHAIR SPACE. A space for a single wheelchair and its occupant.

[BS] WINDBORNE DEBRIS REGION. Areas within hurricane-prone regions located:

1. Within 1 mile (1.61 km) of the coastal mean high-water line where the basic design wind speed, *V*, is 130 mph (58 m/s) or greater; or
2. In areas where the basic design wind speed is 140 mph (63.6 m/s) or greater.

For *Risk Category* II buildings and structures and *Risk Category* III buildings and structures, except health care facilities, the windborne debris region shall be based on Figure 1609.3.(1). For *Risk Category* IV buildings and structures and *Risk Category* III health care facilities, the windborne debris region shall be based on Figure 1609.3(2).

WINDFORCE-RESISTING SYSTEM, MAIN. See "Main windforce-resisting system."

[BS] WIND SPEED, *V*. Basic design wind speeds.

[BS] WIND SPEED, V_{asd}. Allowable stress design wind speeds.

[BE] WINDER. A tread with nonparallel edges.

[BS] WIRE BACKING. Horizontal strands of tautened wire attached to surfaces of vertical supports which, when covered with the building paper, provide a *backing* for cement plaster.

[F] WIRELESS PROTECTION SYSTEM. A system or a part of a system that can transmit and receive signals without the aid of wire.

[BS] WOOD/PLASTIC COMPOSITE. A composite material made primarily from wood or cellulose-based materials and plastic.

[BS] WOOD SHEAR PANEL. A wood floor, roof or wall component sheathed to act as a *shear wall* or *diaphragm*.

[BS] WOOD STRUCTURAL PANEL. A panel manufactured from *veneers*, wood strands or wafers or a combination of *veneer* and wood strands or wafers bonded together with waterproof synthetic resins or other suitable bonding systems. Examples of wood structural panels are:

Composite panels. A wood structural panel that is comprised of wood *veneer* and reconstituted wood-based material and bonded together with waterproof adhesive.

Oriented strand board (OSB). A mat-formed wood structural panel comprised of thin rectangular wood strands arranged in cross-aligned layers with surface layers normally arranged in the long panel direction and bonded with waterproof adhesive.

Plywood. A wood structural panel comprised of plies of wood *veneer* arranged in cross-aligned layers. The plies are bonded with waterproof adhesive that cures on application of heat and pressure.

[F] WORKSTATION. A defined space or an independent principal piece of equipment using *HPM* within a *fabrication area* where a specific function, laboratory procedure or research activity occurs. *Approved* or *listed hazardous materials storage cabinets*, *flammable liquid* storage cabinets or *gas cabinets* serving a workstation are included as part of the workstation. A workstation is allowed to contain *ventilation* equipment, fire protection devices, detection devices, electrical devices and other processing and scientific equipment.

[BS] WYTHE. Each continuous, vertical section of a wall, one *masonry unit* in thickness.

[BG] YARD. An open space, other than a *court*, unobstructed from the ground to the sky, except where specifically provided by this code, on the lot on which a building is situated.

DRAFT

303.1.2 Small assembly spaces. The following rooms and spaces shall not be classified as Assembly occupancies:

1. A room or space used for assembly purposes with an *occupant load* of less than 50 persons and accessory to another occupancy shall be classified as a Group B occupancy or as part of that occupancy.
2. A room or space used for assembly purposes that is less than 750 square feet (70 m^2) in area and accessory to another occupancy shall be classified as a Group B occupancy or as part of that occupancy.

303.1.3 Associated with Group E occupancies. A room or space used for assembly purposes that is associated with a Group E occupancy is not considered a separate occupancy.

303.1.4 Accessory to places of religious worship. Accessory religious educational rooms and religious auditoriums with *occupant loads* of less than 100 per room or space are not considered separate occupancies.

303.2 Assembly Group A-1. Group A-1 occupancy includes assembly uses, usually with fixed seating, intended for the production and viewing of the performing arts or motion pictures including, but not limited to:

Motion picture theaters
Symphony and concert halls
Television and radio studios admitting an audience
Theaters

303.3 Assembly Group A-2. Group A-2 occupancy includes assembly uses intended for food and/or drink consumption including, but not limited to:

Banquet halls
Casinos (gaming areas)
Nightclubs
Restaurants, cafeterias and similar dining facilities
(including associated commercial kitchens)
Taverns and bars

[W] 303.4 Assembly Group A-3. Group A-3 occupancy includes assembly uses intended for worship, recreation or amusement and other assembly uses not classified elsewhere in Group A including, but not limited to:

Amusement arcades
Art galleries <u>more than 3,000 gross square feet</u>
Bowling alleys
Community halls
Courtrooms
Dance halls (not including food or drink consumption)
Exhibition halls
Funeral parlors
Greenhouses for the conservation and exhibition of plants that provide public access.
Gymnasiums (without spectator seating)
Indoor *swimming pools* (without spectator seating)
Indoor tennis courts (without spectator seating)
Lecture halls
Libraries
Museums
Places of religious worship
Pool and billiard parlors
Waiting areas in transportation terminals

303.5 Assembly Group A-4. Group A-4 occupancy includes assembly uses intended for viewing of indoor sporting events and activities with spectator seating including, but not limited to:

Arenas
Skating rinks
Swimming pools
Tennis courts

303.6 Assembly Group A-5. Group A-5 occupancy includes assembly uses intended for participation in or viewing outdoor activities including, but not limited to:

Amusement park structures
Bleachers
Grandstands
Stadiums

DRAFT

SECTION 304
BUSINESS GROUP B

[W] 304.1 Business Group B. Business Group B occupancy includes, among others, the use of a building or structure, or a portion thereof, for office, professional or service-type transactions, including storage of records and accounts. Business occupancies shall include, but not be limited to, the following:

Airport traffic control towers
Ambulatory care facilities
Animal hospitals, kennels and pounds
Banks
Barber and beauty shops
Car wash
Civic administration
Clinic, outpatient
Dry cleaning and laundries: pick-up and delivery stations and self-service
Educational occupancies for students above the 12th grade
Electronic data processing
Food processing establishments and commercial kitchens not associated with restaurants, cafeterias and similar dining facilities, and not more than 2,500 square feet (232 m^2) in area.
Laboratories: testing and research
Motor vehicle showrooms
Post offices
Print shops
Professional services (architects, attorneys, dentists, physicians, engineers, etc.)
Radio and television stations
Telephone exchanges
Training and skill development not in a school or academic program (this shall include, but not be limited to, tutoring centers, martial arts studios, gymnastics and similar uses regardless of the ages served, and where not classified as a Group A occupancy).

DRAFT

SECTION 305
EDUCATIONAL GROUP E

305.1 Educational Group E. Educational Group E occupancy includes, among others, the use of a building or structure, or a portion thereof, by six or more persons at any one time for educational purposes through the 12th grade.

305.1.1 Accessory to places of religious worship. Religious educational rooms and religious auditoriums, which are accessory to *places of religious worship* in accordance with Section 303.1.4 and have *occupant loads* of less than 100 per room or space, shall be classified as Group A-3 occupancies.

305.2 Group E, day care facilities. This group includes buildings and structures or portions thereof occupied by more than five children older than 2 1/2 years of age who receive educational, supervision or *personal care services* for fewer than 24 hours per day.

305.2.1 Within places of religious worship. Rooms and spaces within *places of religious worship* providing such day care during religious functions shall be classified as part of the primary occupancy.

305.2.2 Five or fewer children. A facility having five or fewer children receiving such day care shall be classified as part of the primary occupancy.

305.2.3 Five or fewer children in a dwelling unit. A facility such as the above within a *dwelling unit* and having five or fewer children receiving such day care shall be classified as a Group R-3 occupancy or shall comply with the *International Residential Code*.

[W] 305.2.4 Family home child care. *Family home child care* licensed by Washington State for the care of twelve or fewer children shall be classified as Group R-3 or shall comply with the *International Residential Code.*

SECTION 306
FACTORY GROUP F

306.1 Factory Industrial Group F. Factory Industrial Group F occupancy includes, among others, the use of a building or structure, or a portion thereof, for assembling, disassembling, fabricating, finishing, manufacturing, packaging, repair or processing operations that are not classified as a Group H hazardous or Group S storage occupancy.

[W] 306.2 Moderate-hazard factory industrial, Group F-1. Factory industrial uses that are not classified as Factory Industrial F-2 Low Hazard shall be classified as F-1 Moderate Hazard and shall include, but not be limited to, the following:

Aircraft (manufacturing, not to include repair)
Appliances
Athletic equipment
Automobiles and other motor vehicles
Bakeries
Beverages: over 16-percent alcohol content
Bicycles
Boats
Brooms or brushes
Business machines
Cameras and photo equipment
Canvas or similar fabric
Carpets and rugs (includes cleaning)
Clothing
Construction and agricultural machinery
Disinfectants
Dry cleaning and dyeing
Electric generation plants
Electronics
Engines (including rebuilding)
Food processing establishments and commercial kitchens not associated with restaurants, cafeterias and similar dining facilities, and more than 2,500 square feet (232 m^2) in area.
Furniture
Hemp products
Jute products
Laundries
Leather products
Machinery
Marijuana processing
Metals
Millwork (sash and door)
Motion pictures and television filming (without spectators)
Musical instruments
Optical goods
Paper mills or products
Photographic film
Plastic products
Printing or publishing
Recreational vehicles
Refuse incineration
Shoes
Soaps and detergents
Textiles
Tobacco
Trailers
Upholstering
Wood; distillation
Woodworking (cabinet)

306.3 Low-hazard factory industrial, Group F-2. Factory industrial uses that involve the fabrication or manufacturing of non-combustible materials that during finishing, packing or processing do not involve a significant fire hazard shall be classified as F-2 occupancies and shall include, but not be limited to, the following:

Beverages: up to and including 16-percent alcohol content
Brick and masonry
Ceramic products
Foundries
Glass products
Gypsum

DRAFT

Unstable (reactive) materials, Class 2
Water-reactive materials, Class 2

[F] 307.6 High-hazard Group H-4. Buildings and structures containing materials that are health hazards shall be classified as Group H-4. Such materials shall include, but not be limited to, the following:

Corrosives
Highly toxic materials
Toxic materials

[F] 307.7 High-hazard Group H-5. Semiconductor fabrication facilities and comparable research and development areas in which hazardous production materials (HPM) are used and the aggregate quantity of materials is in excess of those listed in Tables 307.1(1) and 307.1(2) shall be classified as Group H-5. Such facilities and areas shall be designed and constructed in accordance with Section 415.11.

[F] 307.8 Multiple hazards. Buildings and structures containing a material or materials representing hazards that are classified in one or more of Groups H-1, H-2, H-3 and H-4 shall conform to the code requirements for each of the occupancies so classified.

SECTION 308
INSTITUTIONAL GROUP I

308.1 Institutional Group I. Institutional Group I occupancy includes, among others, the use of a building or structure, or a portion thereof, in which care or supervision is provided to persons who are or are not capable of self-preservation without physical assistance or in which persons are detained for penal or correctional purposes or in which the liberty of the occupants is restricted. Institutional occupancies shall be classified as Group I-1, I-2, I-3 or I-4.

[W] 308.2 Institutional Group I-1. Institutional Group I-1 occupancy shall include buildings, structures or portions thereof for more than 16 persons, excluding staff, who reside on a 24-hour basis in a supervised environment and receive custodial care. Buildings of Group I-1 shall be classified as one of the occupancy conditions specified in Section 308.2.1 or 308.2.2. This group shall include, but not be limited to, the following:

Alcohol and drug centers
Assisted living facilities as licensed by Washington state under chapter 388-78A WAC
Congregate care facilities
Group homes
Halfway houses
Residential board and care facilities
Residential treatment facilities as licensed by Washington state under chapter 246-337 WAC
Social rehabilitation facilities

308.2.1 Condition 1. This occupancy condition shall include buildings in which all persons receiving custodial care who, without any assistance, are capable of responding to an emergency situation to complete building evacuation.

308.2.2 Condition 2. This occupancy condition shall include buildings in which there are any persons receiving custodial care who require limited verbal or physical assistance while responding to an emergency situation to complete building evacuation.

[S] ((~~308.2.3 Six to 16 persons receiving custodial care.~~ ~~A facility housing not fewer than six and not more than 16 persons receiving custodial care shall be classified as Group R-4.~~))

((~~308.2.4~~)) 308.2.3 Five or fewer persons receiving custodial care. A facility with five or fewer persons receiving custodial care shall be classified as Group R-3 or shall comply with the *International Residential Code* provided an *automatic sprinkler system* is installed in accordance with Section 903.3.1.3 or Section P2904 of the *International Residential Code*.

[W] 308.2.4 Adult family homes. *Adult family homes* licensed by Washington state shall be classified as Group R-3 or shall comply with the International Residential Code.

[W] 308.2.5 Licensed care facilities. Assisted living facilities as licensed by Washington State under chapter 388-78A WAC shall be classified as Group I-1, Condition 2.

Residential treatment facilities licensed by Washington State under chapter 246-337 WAC shall be classified as one or more occupancy types in accordance with chapter 246-337 WAC.

[W] 308.3 Institutional Group I-2. Institutional Group I-2 occupancy shall include buildings and structures used for *medical care* on a 24-hour basis for more than five persons who are *incapable of self-preservation*. This group shall include, but not be limited to, the following:

Foster care facilities
Detoxification facilities

DRAFT

Hospice care centers
Hospitals
Nursing homes
Psychiatric hospitals

308.3.1 Occupancy conditions. Buildings of Group I-2 shall be classified as one of the occupancy conditions specified in Section 308.3.1.1 or 308.3.1.2.

308.3.1.1 Condition 1. This occupancy condition shall include facilities that provide nursing and medical care but do not provide emergency care, surgery, obstetrics or in-patient stabilization units for psychiatric or detoxification, including but not limited to nursing homes and foster care facilities.

308.3.1.2 Condition 2. This occupancy condition shall include facilities that provide nursing and medical care and could provide emergency care, surgery, obstetrics or in-patient stabilization units for psychiatric or detoxification, including but not limited to hospitals.

308.3.2 Five or fewer persons receiving medical care. A facility with five or fewer persons receiving medical care shall be classified as Group R-3 or shall comply with the *International Residential Code* provided an *automatic sprinkler system* is installed in accordance with Section 903.3.1.3 or Section P2904 of the *International Residential Code*.

308.4 Institutional Group I-3. Institutional Group I-3 occupancy shall include buildings and structures that are inhabited by more than five persons who are under restraint or security. A Group I-3 facility is occupied by persons who are generally *incapable of self-preservation* due to security measures not under the occupants' control. This group shall include, but not be limited to, the following:

Correctional centers
Detention centers
Jails
Prerelease centers
Prisons
Reformatories

Buildings of Group I-3 shall be classified as one of the occupancy conditions specified in Sections 308.4.1 through 308.4.5 (see Section 408.1).

308.4.1 Condition 1. This occupancy condition shall include buildings in which free movement is allowed from sleeping areas, and other spaces where access or occupancy is permitted, to the exterior via *means of egress* without restraint. A Condition 1 facility is permitted to be constructed as Group R.

308.4.2 Condition 2. This occupancy condition shall include buildings in which free movement is allowed from sleeping areas and any other occupied *smoke compartment* to one or more other *smoke compartments*. Egress to the exterior is impeded by locked *exits*.

308.4.3 Condition 3. This occupancy condition shall include buildings in which free movement is allowed within individual *smoke compartments*, such as within a residential unit comprised of individual *sleeping units* and group activity spaces, where egress is impeded by remote-controlled release of *means of egress* from such a *smoke compartment* to another *smoke compartment*.

308.4.4 Condition 4. This occupancy condition shall include buildings in which free movement is restricted from an occupied space. Remote-controlled release is provided to permit movement from *sleeping units*, activity spaces and other occupied areas within the *smoke compartment* to other *smoke compartments*.

308.4.5 Condition 5. This occupancy condition shall include buildings in which free movement is restricted from an occupied space. Staff-controlled manual release is provided to permit movement from *sleeping units*, activity spaces and other occupied areas within the *smoke compartment* to other *smoke compartments*.

308.5 Institutional Group I-4, day care facilities. Institutional Group I-4 occupancy shall include buildings and structures occupied by more than five persons of any age who receive *custodial care* for fewer than 24 hours per day by persons other than parents or guardians, relatives by blood, marriage or adoption, and in a place other than the home of the person cared for. This group shall include, but not be limited to, the following:

Adult day care
Child day care

308.5.1 Classification as Group E. A child day care facility that provides care for more than five but not more than 100 children 2 1/2 years or less of age, where the rooms in which the children are cared for are located on a *level of exit discharge* serving such rooms and each of these child care rooms has an *exit* door directly to the exterior, shall be classified as Group E.

308.5.2 Within a place of religious worship. Rooms and spaces within *places of religious worship* providing such care during religious functions shall be classified as part of the primary occupancy.

308.5.3 Five or fewer persons receiving care. A facility having five or fewer persons receiving *custodial care* shall be classified as part of the primary occupancy.

DRAFT

308.5.4 Five or fewer persons receiving care in a dwelling unit. A facility such as the above within a *dwelling unit* and having five or fewer persons receiving *custodial care* shall be classified as a Group R-3 occupancy or shall comply with the *International Residential Code.*

[W] 308.5.5 Family home child care. *Family home child care* licensed by Washington state for the care of 12 or fewer children shall be classified as Group R-3 or shall comply with the *International Residential Code*.

SECTION 309
MERCANTILE GROUP M

[W] 309.1 Mercantile Group M. Mercantile Group M occupancy includes, among others, the use of a building or structure or a portion thereof for the display and sale of merchandise, and involves stocks of goods, wares or merchandise incidental to such purposes and accessible to the public. Mercantile occupancies shall include, but not be limited to, the following:

Art galleries, 3,000 gross square feet or less
Department stores
Drug stores
Markets
Greenhouses for display and sale of plants that provide public access.
Motor fuel-dispensing facilities
Retail or wholesale stores
Sales rooms

309.2 Quantity of hazardous materials. The aggregate quantity of nonflammable solid and nonflammable or noncombustible liquid hazardous materials stored or displayed in a single *control area* of a Group M occupancy shall not exceed the quantities in Table 414.2.5(1).

SECTION 310
RESIDENTIAL GROUP R

310.1 Residential Group R. Residential Group R includes, among others, the use of a building or structure, or a portion thereof, for sleeping purposes when not classified as an Institutional Group I or when not regulated by the *International Residential Code*.

310.2 Residential Group R-1. Residential Group R-1 occupancies containing *sleeping units* where the occupants are primarily *transient* in nature, including:

Boarding houses (*transient*) with more than 10 occupants
Congregate living facilities (*transient)* with more than 10 occupants
Hotels (*transient*)
Motels (*transient*)

[W] 310.3 Residential Group R-2. Residential Group R-2 occupancies containing *sleeping units* or more than two *dwelling units* where the occupants are primarily permanent in nature, including:

Apartment houses
Assisted living facilities licensed by Washington state under Chapter 388-78A WAC
Congregate living facilities (nontransient) with more than 16 occupants
- *Boarding houses (nontransient)*
- Convents
- *Dormitories*
- Fraternities and sororities
- Monasteries

Hotels (nontransient)
((~~*Live/work*~~)) Buildings that contain three or more *live/work units*
Motels (nontransient)
Residential treatment facilities licensed by Washington State under Chapter 246-337 WAC
Vacation timeshare properties

[S] 310.4 Residential Group R-3. Residential Group R-3 occupancies where the occupants are primarily permanent in nature and not classified as Group R-1, R-2, R-4 or I, including:

Buildings that do not contain more than two *dwelling units*
Buildings that do not contain more than two live/work units
Care facilities that provide accommodations for five or fewer persons receiving care
Congregate living facilities (nontransient) with 16 or fewer occupants

DRAFT

Boarding houses (nontransient)
Convents
Dormitories
Fraternities and sororities
Monasteries

Congregate living facilities (*transient*) with 10 or fewer occupants

Boarding houses (transient)

Lodging houses (*transient*) with five or fewer *guest rooms* and 10 or fewer occupants

310.4.1 Care facilities within a dwelling. Care facilities for five or fewer persons receiving care that are within a single-family dwelling are permitted to comply with the *International Residential Code* provided an *automatic sprinkler system* is installed in accordance with Section 903.3.1.3 or Section P2904 of the *International Residential Code*.

310.4.2 Lodging houses. Owner-occupied *lodging houses* with five or fewer *guest rooms* and 10 or fewer total occupants shall be permitted to be constructed in accordance with the *International Residential Code*.

[W] 310.4.3 Adult family homes, family home child care. *Adult family homes* and *family home child care* facilities that are within a single-family home are permitted to comply with the *International Residential Code*.

[W] 310.4.4 Foster family care homes. Foster family care homes licensed by Washington state are permitted to comply with the International Residential Code, as an accessory use to a *dwelling*, for six or fewer children including those of the resident family.

[S] ((~~310.5 Residential Group R-4.~~ ~~Residential Group R-4 occupancy shall include buildings, structures or portions thereof for more than five but not more than 16 persons, excluding staff, who reside on a 24-hour basis in a supervised residential environment and receive *custodial care*. Buildings of Group R-4 shall be classified as one of the occupancy conditions specified in Section 310.5.1 or 310.5.2. This group shall include, but not be limited to, the following:~~

~~Alcohol and drug centers~~
~~Assisted living facilities~~
~~Congregate care facilities~~
~~*Group homes*~~
~~Halfway houses~~
~~Residential board and care facilities~~
~~Social rehabilitation facilities~~

~~Group R-4 occupancies shall meet the requirements for construction as defined for Group R-3, except as otherwise provided for in this code.~~

~~**310.5.1 Condition 1.** This occupancy condition shall include buildings in which all persons receiving custodial care, without any assistance, are capable of responding to an emergency situation to complete building evacuation.~~

~~**310.5.2 Condition 2.** This occupancy condition shall include buildings in which there are any persons receiving custodial care who require limited verbal or physical assistance while responding to an emergency situation to complete building evacuation.~~))

DRAFT

SECTION 311
STORAGE GROUP S

311.1 Storage Group S. Storage Group S occupancy includes, among others, the use of a building or structure, or a portion thereof, for storage that is not classified as a hazardous occupancy.

311.1.1 Accessory storage spaces. A room or space used for storage purposes that is accessory to another occupancy shall be classified as part of that occupancy.

[S] 311.2 Moderate-hazard storage, Group S-1. Storage Group S-1 occupancies are buildings occupied for storage uses that are not classified as Group S-2, including, but not limited to, storage of the following:

Aerosol products, Levels 2 and 3
Aircraft hangar (storage and repair)
Bags: cloth, burlap and paper
Bamboos and rattan
Baskets
Belting: canvas and leather
Books and paper in rolls or packs
Boots and shoes
Buttons, including cloth covered, pearl or bone
Cardboard and cardboard boxes
Clothing, woolen wearing apparel

Cordage
Dry boat storage (indoor)
Furniture
Furs
Glues, mucilage, pastes and size
Grains
Horns and combs, other than celluloid
Leather
Linoleum
Lumber
Motor vehicle and marine repair garages complying with the maximum allowable quantities of hazardous materials listed in Table 307.1(1) (see Section 406.8)
Photo engravings
Resilient flooring
Self-service storage facility (mini-storage)
Silks
Soaps
Sugar
Tires, bulk storage of
Tobacco, cigars, cigarettes and snuff
Upholstery and mattresses
Wax candles

[S] 311.3 Low-hazard storage, Group S-2. Storage Group S-2 occupancies include, among others, buildings used for the storage of noncombustible materials such as products on wood pallets or in paper cartons with or without single thickness divisions; or in paper wrappings. Such products are permitted to have a negligible amount of plastic *trim*, such as knobs, handles or film wrapping. Group S-2 storage uses shall include, but not be limited to, storage of the following:

Asbestos
Beverages up to and including 16-percent alcohol in metal, glass or ceramic containers
Cement in bags
Chalk and crayons
Covered boat moorage not classified as Group U
Dairy products in nonwaxed coated paper containers
Dry cell batteries
Electrical coils
Electrical motors
Empty cans
Food products
Foods in noncombustible containers
Fresh fruits and vegetables in nonplastic trays or containers
Frozen foods
Glass
Glass bottles, empty or filled with noncombustible liquids
Gypsum board
Inert pigments
Ivory
Meats
Metal cabinets
Metal desks with plastic tops and *trim*
Metal parts
Metals
Mirrors
Oil-filled and other types of distribution transformers
Parking garages, open or enclosed
Porcelain and pottery
Stoves
Talc and soapstones
Washers and dryers

DRAFT

SECTION 312
UTILITY AND MISCELLANEOUS GROUP U

[S] 312.1 General. Buildings and structures of an accessory character and miscellaneous structures not classified in any specific occupancy shall be constructed, equipped and maintained to conform to the requirements of this code commensurate with the fire and life hazard incidental to their occupancy. Group U shall include, but not be limited to, the following:

Agricultural buildings
Aircraft hangars, accessory to a one- or two-family residence (see Section 412.4)
Barns
Carports
Communication equipment structures with a *gross floor area* of less than 1,500 square feet (139 m^2)
Covered boat moorage accessory to Group R-3 *dwelling unit*
Fences more than 6 feet (1829 mm) in height
Grain silos, accessory to a residential occupancy
Livestock shelters
Private garages that comply with Section 406.3
Retaining walls
Sheds
Stables
Tanks
Towers

312.1.1 Greenhouses. Greenhouses not classified as another occupancy shall be classified as Use Group U.

DRAFT

CHAPTER 4

SPECIAL DETAILED REQUIREMENTS BASED ON OCCUPANCY AND USE

User note:

About this chapter: *Chapter 4 provides detailed criteria for special uses and occupancies. The unique characteristics of a live/work unit as opposed to a 30-story high-rise building call for specific standards for each. Twenty-seven sections address covered and open mall buildings, atriums, hospitals, stages, buildings where hazardous materials are used and stored, jails and prisons, ambulatory care facilities and storm shelters, among other special occupancy issues.*

SECTION 401
SCOPE

401.1 Detailed occupancy and use requirements. In addition to the occupancy and construction requirements in this code, the provisions of this chapter apply to the occupancies and use described herein.

SECTION 402
COVERED MALL AND OPEN MALL BUILDINGS

402.1 Applicability. The provisions of this section shall apply to buildings or structures defined herein as *covered or open mall buildings* not exceeding three floor levels at any point nor more than three *stories above grade plane*. Except as specifically required by this section, *covered and open mall buildings* shall meet applicable provisions of this code.

Exceptions:

1. Foyers and lobbies of Groups B, R-1 and R-2 are not required to comply with this section.
2. Buildings need not comply with the provisions of this section where they totally comply with other applicable provisions of this code.

402.1.1 Open mall building perimeter line. For the purpose of this code, a perimeter line shall be established. The perimeter line shall encircle all buildings and structures that comprise the *open mall building* and shall encompass any open-air interior walkways, open-air courtyards or similar open-air spaces. The perimeter line shall define the extent of the *open mall building*. *Anchor buildings* and parking structures shall be outside of the perimeter line and are not considered as part of the *open mall building*.

402.2 Open space. A *covered mall building* and attached *anchor buildings* and parking garages shall be surrounded on all sides by a permanent open space or not less than 60 feet (18 288 mm). An *open mall building* and *anchor buildings* and parking garages adjoining the perimeter line shall be surrounded on all sides by a permanent open space of not less than 60 feet (18 288 mm).

Exception: The permanent open space of 60 feet (18 288 mm) shall be permitted to be reduced to not less than 40 feet (12 192 mm), provided that the following requirements are met:

1. The reduced open space shall not be allowed for more than 75 percent of the perimeter of the *covered or open mall building* and *anchor buildings*.
2. The *exterior wall* facing the reduced open space shall have a *fire-resistance rating* of not less than 3 hours.
3. Openings in the *exterior wall* facing the reduced open space shall have opening protectives with a *fire protection rating* of not less than 3 hours.
4. Group E, H, I or R occupancies are not located within the *covered or open mall building* or *anchor buildings*.

[S] ((~~402.3 Lease plan.~~ ~~Each *owner* of a *covered mall building* or of an *open mall building* shall provide both the building and fire departments with a lease plan showing the location of each occupancy and its *exits* after the certificate of occupancy has been issued. Modifications or changes in occupancy or use from that shown on the lease plan shall not be made without prior approval of the *building official*.~~))

402.4 Construction. The construction of *covered and open mall buildings*, *anchor buildings* and parking garages associated with a *mall* building shall comply with Sections 402.4.1 through 402.4.3.

402.4.1 Area and types of construction. The *building area* and type of construction of *covered mall* or *open mall buildings*, *anchor buildings* and parking garages shall comply with this section.

DRAFT

[S][F] 402.7.3 Emergency power system. *Covered mall buildings* greater than 50,000 square feet (4645 m^2) in area and *open mall buildings* greater than 50,000 square feet (4645 m^2) within the established perimeter line shall be provided with emergency power *systems* that is capable of operating the *emergency voice/alarm communication system* in accordance with Section 2702.

[F] 402.7.4 Emergency voice/alarm communication system. Where the total floor area is greater than 50,000 square feet (4645 m^2) within either a *covered mall building* or within the perimeter line of an *open mall building*, an *emergency voice/alarm communication system* shall be provided.

The fire department shall have access to any *emergency voice/alarm communication systems* serving a *mall*, required or otherwise. The systems shall be provided in accordance with Section 907.5.2.2.

[F] 402.7.5 Fire department access to equipment. Rooms or areas containing controls for air-conditioning systems, *automatic fire-extinguishing systems*, *automatic sprinkler systems* or other detection, suppression or control elements shall be identified for use by the fire department.

402.8 Means of egress. *Covered mall buildings*, *open mall buildings* and each tenant space within a mall building shall be provided with *means of egress* as required by this section and this code. Where there is a conflict between the requirements of this code and the requirements of Sections 402.8.1 through 402.8.8, the requirements of Sections 402.8.1 through 402.8.8 shall apply.

402.8.1 Mall width. For the purpose of providing required egress, *malls* are permitted to be considered as *corridors* but need not comply with the requirements of Section 1005.1 of this code where the width of the *mall* is as specified in this section.

402.8.1.1 Minimum width. The aggregate clear egress width of the *mall* in either a *covered or open mall building* shall be not less than 20 feet (6096 mm). The *mall* width shall be sufficient to accommodate the *occupant load* served. Any portion of the minimum required aggregate egress width shall be not less than 10 feet (3048 mm) measured to a height of 8 feet (2438 mm) between any projection of a tenant space bordering the *mall* and the nearest kiosk, vending machine, bench, display opening, *food court* or other obstruction to *means of egress* travel.

402.8.2 Determination of occupant load. The *occupant load* permitted in any individual tenant space in a *covered or open mall building* shall be determined as required by this code. *Means of egress* requirements for individual tenant spaces shall be based on the *occupant load* thus determined.

402.8.2.1 Occupant formula. In determining required *means of egress* of the *mall*, the number of occupants for whom *means of egress* are to be provided shall be based on *gross leasable area* of the *covered or open mall building* (excluding *anchor buildings*) and the *occupant load* factor as determined by Equation 4-1.

$OLF = (0.00007)(GLA) + 25$ **(Equation 4-1)**

where:

OLF= The *occupant load* factor (square feet per person).

GLA= The *gross leasable area* (square feet).

Exception: Tenant spaces attached to a *covered or open mall building* but with a *means of egress* system that is totally independent of the *open mall* of an *open mall building* or of a *covered mall building* shall not be considered as *gross leasable area* for determining the required *means of egress* for the *mall building*.

402.8.2.2 OLF range. The *occupant load* factor (*OLF*) is not required to be less than 30 and shall not exceed 50.

402.8.2.3 Anchor buildings. The *occupant load* of *anchor buildings* opening into the *mall* shall not be included in computing the total number of occupants for the *mall*.

402.8.2.4 Food courts. The *occupant load* of a *food court* shall be determined in accordance with Section 1004. For the purposes of determining the *means of egress* requirements for the *mall*, the *food court occupant load* shall be added to the *occupant load* of the *covered or open mall building* as calculated in Section 402.8.2.1.

402.8.3 Number of means of egress. Wherever the distance of travel to the *mall* from any location within a tenant space used by persons other than employees is greater than 75 feet (22 860 mm) or the tenant space has an *occupant load* of 50 or more, not fewer than two *means of egress* shall be provided.

402.8.4 Arrangements of means of egress. Assembly occupancies with an *occupant load* of 500 or more located within a *covered mall building* shall be so located such that their entrance will be immediately adjacent to a principal entrance to the *mall* and shall have not less than one-half of their required *means of egress* opening directly to the exterior of the *covered mall building*. Assembly occupancies located within the perimeter line of an *open mall building* shall be permitted to have their main *exit* open to the *open mall*.

402.8.4.1 Anchor building means of egress. Required *means of egress* for *anchor buildings* shall be provided independently from the *mall means of egress* system. The *occupant load* of *anchor buildings* opening into the *mall* shall not be included in determining *means of egress* requirements for the *mall*. The path of egress travel of *malls* shall not exit

DRAFT

through *anchor buildings*. *Malls* terminating at an *anchor building* where other *means of egress* has not been provided shall be considered as a dead-end *mall*.

402.8.5 Distance to exits. Within each individual tenant space in a *covered or open mall building*, the distance of travel from any point to an *exit* or entrance to the *mall* shall be not greater than 200 feet (60 960 mm).

The distance of travel from any point within a *mall* of a *covered mall building* to an *exit* shall be not greater than 200 feet (60 960 mm). The maximum distance of travel from any point within an *open mall* to the perimeter line of the *open mall building* shall be not greater than 200 feet (60 960 mm).

402.8.6 Access to exits. Where more than one *exit* is required, they shall be so arranged that it is possible to travel in either direction from any point in a *mall* of a *covered mall building* to separate *exits* or from any point in an *open mall* of an *open mall building* to two separate locations on the perimeter line, provided that neither location is an exterior wall of an *anchor building* or parking garage. The width of an *exit passageway* or *corridor* from a *mall* shall be not less than 66 inches (1676 mm).

Exception: Access to exits is permitted by way of a dead-end *mall* that does not exceed a length equal to twice the width of the *mall* measured at the narrowest location within the dead-end portion of the *mall*.

402.8.6.1 Exit passageways. Where *exit passageways* provide a secondary *means of egress* from a tenant space, the *exit passageways* shall be constructed in accordance with Section 1024.

402.8.7 Service areas fronting on exit passageways. Mechanical rooms, electrical rooms, building service areas and service elevators are permitted to open directly into *exit passageways*, provided that the *exit passageway* is separated from such rooms with not less than 1-hour *fire barriers* constructed in accordance with Section 707 or *horizontal assemblies* constructed in accordance with Section 711, or both. The *fire protection rating* of openings in the *fire barriers* shall be not less than 1 hour.

402.8.8 Security grilles and doors. Horizontal sliding or vertical security grilles or doors that are a part of a required *means of egress* shall conform to the following:

1. Doors and grilles shall remain in the full open position during the period of occupancy by the general public.
2. Doors or grilles shall not be brought to the closed position when there are 10 or more persons occupying spaces served by a single *exit* or 50 or more persons occupying spaces served by more than one *exit*.
3. The doors or grilles shall be openable from within without the use of any special knowledge or effort where the space is occupied.
4. Where two or more *exits* are required, not more than one-half of the *exits* shall be permitted to include either a horizontal sliding or vertical rolling grille or door.

DRAFT

SECTION 403
HIGH-RISE BUILDINGS

[S] 403.1 Applicability. *High-rise buildings* shall comply with Sections 403.2 through ((~~403.6~~)) 403.8.

Exception: The provisions of Sections 403.2 through 403.6 shall not apply to the following buildings and structures:

1. Airport traffic control towers in accordance with Section 412.2.
2. *Open parking garages* in accordance with Section 406.5.
3. The portion of a building containing a Group A-5 occupancy in accordance with Section 303.6.
4. Special industrial occupancies in accordance with Section 503.1.1.

((~~5. Buildings containing any one of the following:~~

~~5.1. A Group H-1 occupancy.~~

~~5.2. A Group H-2 occupancy in accordance with Section 415.8, 415.9.2, 415.9.3 or 426.1.~~

~~5.3. A Group H-3 occupancy in accordance with Section 415.8.~~))

Interpretation I403.1a: Item 2 only includes buildings in which parking is the principal use.

Interpretation I403.1b: For the purpose of this section, occupied roof decks are considered floors used for human occupancy if the occupant load of the deck is ten or more on the roof of a building not equipped with an *automatic sprinkler system* or where the occupant load is 50 or more on the roof of a building that is equipped with an *automatic sprinkler system*.

403.1.1 Presubmittal conference. At least 60 days prior to application, the applicant shall arrange a presubmittal conference with the design team, the *building official* and the *fire code official*. The purpose of the meeting is to obtain conceptual

approval from the *building official* and the *fire code official*. The documentation of the presubmittal meeting shall be reflected on the plans for the building and become a permanent part of the Department of Construction and Inspection's records.

Note: High rise projects using an alternative lateral force resisting system are subject to peer review which requires lengthy lead time. Applicants should contact the *building official* prior to start of structural design. See Section 1613.

403.1.2 Testing. All mechanical and electrical equipment installed according to *approved* plans and specifications pursuant to this section shall be tested and proven to be in proper working condition to the satisfaction of the *fire code official* before issuance of the Certificate of Occupancy. Such systems shall be maintained in accordance with the *International Fire Code*.

[S] 403.2 Construction. The construction of *high-rise buildings* shall comply with the provisions of Sections 403.2.1 through 403.2.4.

403.2.1 Reduction in fire-resistance rating. The *fire-resistance rating* reductions listed in Sections 403.2.1.1 and 403.2.1.2 shall be allowed in buildings that have sprinkler control valves equipped with supervisory initiating devices and water-flow initiating devices for each floor.

403.2.1.1 Type of construction. The following reductions in the minimum *fire-resistance rating* of the building elements in Table 601 shall be permitted as follows:

1. For buildings not greater than 420 feet (128 m) in *building height*, the *fire-resistance rating* of the building elements in Type IA construction shall be permitted to be reduced to the minimum *fire-resistance ratings* for the building elements in Type IB.

   Exception: The required *fire-resistance rating* of ((~~columns supporting floors~~)) structural frame and bearing walls shall not be reduced.

2. In other than Group F-1, H-2, H-3, H-5, M and S-1 occupancies, the *fire-resistance rating* of the building elements in Type IB construction shall be permitted to be reduced to the *fire-resistance ratings* in Type IIA.
3. The *building height* and *building area* limitations of a building containing building elements with reduced *fire-resistance ratings* shall be permitted to be the same as the building without such reductions.

403.2.1.2 Shaft enclosures. For buildings not greater than 420 feet (128 m) in *building height*, the required *fire-resistance rating* of the *fire barriers* enclosing vertical *shafts*, other than *interior exit stairway* and elevator hoistway enclosures, is permitted to be reduced to 1 hour where automatic sprinklers are installed within the *shafts* at the top and at alternate floor levels.

403.2.2 Seismic considerations. For seismic considerations, see Chapter 16.

[BS] 403.2.3 Structural integrity of interior exit stairways and elevator hoistway enclosures. For *high-rise buildings* of *Risk Category* III or IV in accordance with Section 1604.5, for fire service access elevators, and for all buildings that are more than 420 feet (128 m) in *building height*, enclosures for *interior exit stairways* and elevator hoistway enclosures shall comply with Sections 403.2.3.1 through 403.2.3.4.

[BS] 403.2.3.1 Wall assembly. The wall assemblies making up the enclosures for *interior exit stairways* and elevator hoistway enclosures shall meet or exceed Soft Body Impact Classification Level 2 as measured by the test method described in ASTM C1629/C1629M.

[BS] 403.2.3.2 Wall assembly materials. The face of the wall assemblies making up the enclosures for *interior exit stairways* and elevator hoistway enclosures that are not exposed to the interior of the enclosures for *interior exit stairways* or elevator hoistway enclosure shall be constructed in accordance with one of the following methods:

1. The wall assembly shall incorporate not fewer than two layers of impact-resistant construction board each of which meets or exceeds Hard Body Impact Classification Level 2 as measured by the test method described in ASTM C1629/C1629M.
2. The wall assembly shall incorporate not fewer than one layer of impact-resistant construction material that meets or exceeds Hard Body Impact Classification Level 3 as measured by the test method described in ASTM C1629/C1629M.
3. The wall assembly incorporates multiple layers of any material, tested in tandem, that meets or exceeds Hard Body Impact Classification Level 3 as measured by the test method described in ASTM C1629/C1629M.

[BS] 403.2.3.3 Concrete and masonry walls. Concrete or masonry walls shall be deemed to satisfy the requirements of Sections 403.2.3.1 and 403.2.3.2.

[BS] 403.2.3.4 Other wall assemblies. Any other wall assembly that provides impact resistance equivalent to that required by Sections 403.2.3.1 and 403.2.3.2 for Hard Body Impact Classification Level 3, as measured by the test method described in ASTM C1629/C1629M, shall be permitted.

DRAFT

403.2.4 Sprayed fire-resistant materials (SFRM). The bond strength of the SFRM installed throughout the building shall be in accordance with Table 403.2.4.

TABLE 403.2.4
MINIMUM BOND STRENGTH

HEIGHT OF BUILDING[a]	SFRM MINIMUM BOND STRENGTH
Up to 420 feet	430 psf
Greater than 420 feet	1,000 psf

For SI: 1 foot = 304.8 mm, 1 pound per square foot (psf) = 0.0479 kN/m^2.
a. Above the lowest level of fire department vehicle access.

[S][F] 403.3 Automatic sprinkler system. Buildings and structures shall be equipped throughout with an *automatic sprinkler system* in accordance with Section 903.3.1.1 and a secondary water supply where required by Section 403.3.3. See Section 903.3.1.1.3 for additional requirements for sprinkler systems in high-rise buildings.

Exception: An *automatic sprinkler system* shall not be required in spaces or areas of ((~~:~~

~~1. *Open parking garages* in accordance with Section 406.5.~~

~~2. Telecommunications~~)) telecommunications equipment buildings used exclusively for telecommunications equipment, associated electrical power distribution equipment, batteries and standby engines, provided that those spaces or areas are equipped throughout with an automatic fire detection system in accordance with Section 907.2 and are separated from the remainder of the building by not less than 1-hour *fire barriers* constructed in accordance with Section 707 or not less than 2-hour *horizontal assemblies* constructed in accordance with Section 711, or both.

[F] 403.3.1 Number of sprinkler risers and system design. Each sprinkler system zone in buildings that are more than 420 feet (128 m) in *building height* shall be supplied by not fewer than two risers. Each riser shall supply sprinklers on alternate floors. If more than two risers are provided for a zone, sprinklers on adjacent floors shall not be supplied from the same riser.

[F] 403.3.1.1 Riser location. Sprinkler risers shall be placed in *interior exit stairways* and ramps that are remotely located in accordance with Section 1007.1.

[W][F] 403.3.2 Water supply to required fire pumps. In buildings that are more than 420 feet (128 m) in *building height*, and buildings of Type IV-A and IV-B that are more than 120 feet in *building height*, required fire pumps shall be supplied by connections to not fewer than two water mains located in different streets. Separate supply piping shall be provided between each connection to the water main and the pumps. Each connection and the supply piping between the connection and the pumps shall be sized to supply the flow and pressure required for the pumps to operate.

Exception: Two connections to the same main shall be permitted provided that the main is valved such that an interruption can be isolated so that the water supply will continue without interruption through not fewer than one of the connections.

[F] 403.3.3 Secondary water supply. An automatic secondary on-site water supply having a capacity not less than the hydraulically calculated sprinkler demand, including the hose stream requirement, shall be provided for *high-rise buildings* assigned to Seismic Design Category C, D, E or F as determined by Section 1613. An additional fire pump shall not be required for the secondary water supply unless needed to provide the minimum design intake pressure at the suction side of the fire pump supplying the *automatic sprinkler system*. The secondary water supply shall have a duration of not less than 30 minutes.

[F] 403.3.4 Fire pump room. Fire pumps shall be located in rooms protected in accordance with Section 913.2.1.

[F] 403.4 Emergency systems. The detection, alarm and emergency systems of *high-rise buildings* shall comply with Sections 403.4.1 through 403.4.8.

[F] 403.4.1 Smoke detection. Smoke detection shall be provided in accordance with Section 907.2.12.1.

[F] 403.4.2 Fire alarm system. A *fire alarm* system shall be provided in accordance with Section 907.2.12.

[F] 403.4.3 Standpipe system. A *high-rise building* shall be equipped with a standpipe system as required by Section 905.3.

[F] 403.4.4 Emergency voice/alarm communication system. An *emergency voice/alarm communication system* shall be provided in accordance with Section 907.5.2.2.

[F] 403.4.5 Emergency responder radio coverage. Emergency responder radio coverage shall be provided in accordance with Section 510 of the *International Fire Code*.

[F] 403.4.6 Fire command. A *fire command center* complying with Section 911 shall be provided in a location *approved* by the fire code official.

[F] 403.4.7 ((~~Smoke removal.~~)) No requirements. ((~~To facilitate smoke removal in post-fire salvage and overhaul operations, buildings and structures shall be equipped with natural or mechanical *ventilation* for removal of products of combustion in accordance with one of the following:~~

DRAFT

~~1. Easily identifiable, manually operable windows or panels shall be distributed around the perimeter of each floor at not more than 50-foot (15 240 mm) intervals. The area of operable windows or panels shall be not less than 40 square feet (3.7 m²) per 50 linear feet (15 240 mm) of perimeter.~~

~~**Exceptions:**~~

~~1. In Group R-1 occupancies, each *sleeping unit* or suite having an *exterior wall* shall be permitted to be provided with 2 square feet (0.19 m²) of venting area in lieu of the area specified in Item 1.~~

~~2. Windows shall be permitted to be fixed provided that glazing can be cleared by fire fighters.~~

~~2. Mechanical air-handling equipment providing one exhaust air change every 15 minutes for the area involved. Return and exhaust air shall be moved directly to the outside without recirculation to other portions of the building.~~

~~3. Any other *approved* design that will produce equivalent results.~~))

[F] 403.4.8 ((~~Standby and emergency~~)) Emergency power. ((~~A standby power system complying with Section 2702 and Section 3003 shall be provided for the standby power loads specified in Section 403.4.8.3.~~)) An emergency power system complying with Section 2702 shall be provided for the emergency power loads specified in Section 403.4.8.4.

[F] 403.4.8.1 Equipment room. If the ((~~standby or~~)) emergency power system includes a generator set inside a building, the system shall be located in a separate room enclosed with 2-hour *fire barriers* constructed in accordance with Section 707 or *horizontal assemblies* constructed in accordance with Section 711, or both. System supervision with manual start and transfer features shall be provided at the *fire command center*.

Exceptions:

1. In Group I-2, Condition 2, manual start and transfer features for the critical branch of the emergency power are not required to be provided at the *fire command center*.
2. Where located within a sprinklered parking garage of Type I or II construction, emergency power and *legally required standby power systems* with fixed fuel quantities meeting the limits of Section 603.3 of the *International Fire Code*, and their transfer switches, are not required to be in a separate room. Other occupancies located in the *story* where the system is located shall be separated from the system by fire barriers with a minimum 1 hour fire-resistance rating.
3. Combustion and radiator intake air are permitted to be transferred from the adjacent garage. Radiator discharge air is permitted to be transferred to the adjacent garage. Radiator ventilation intake and discharge air locations shall be separated to maintain the radiator ventilation intake air temperature below the maximum temperature allowed to meet the emergency and *legally required standby power system* loads.

[F] 403.4.8.2 Fuel line piping protection. Fuel lines supplying a generator set inside a building shall be separated from areas of the building other than the room the generator is located in by an approved method or assembly that has a fire-resistance rating of not less than ((~~2 hours. Where the building is protected throughout with an automatic sprinkler system installed in accordance with Section 903.3.1.1 or 903.3.1.2, the required fire-resistance rating shall be reduced to~~)) 1 hour.

((~~**[F] 403.4.8.3 Standby power loads.** The following are classified as standby power loads:~~

~~1. *Ventilation* and automatic fire detection equipment for *smokeproof* enclosures.~~

~~2. Elevators.~~

~~3. Where elevators are provided in a *high-rise building* for *accessible means of egress*, fire service access or occupant self-evacuation, the standby power system shall also comply with Sections 1009.4, 3007 or 3008, as applicable.~~))

[F] 403.4.8.4 Emergency power loads. The following are classified as emergency power loads:

1. Exit signs and *means of egress* illumination required by Chapter 10.
2. Elevator car lighting.
3. *Emergency voice/alarm communications systems*.
4. Automatic fire detection systems.
5. *Fire alarm* systems.
6. Electrically powered fire pumps.
7. Power and lighting for mechanical equipment rooms and the fire command center required by Section 403.4.6.
8. Lighting for elevator cars, machine rooms, machine spaces and control rooms.
9. Ventilation and cooling equipment for elevator machine rooms, machine spaces and control rooms.
10. Ventilation and automatic fire detection equipment for pressurized stairways and elevator hoistways.
11. Smoke control system.

DRAFT

12. A selected elevator in each elevator group, in accordance with Section 3016.6. All elevators shall be transferable to an *emergency power system*.

Note: No more than four cars are permitted within a hoistway. See Section 3016.7.

13. For fire service access and occupant evacuation elevators:
    - 13.1 Operation of all fire service access elevator cars.
    - 13.2 Operation of all occupant evacuation elevators until they are recalled.
    - 13.3. Elevator controller cooling equipment.
    - 13.4. For fire service access elevators only, elevator hoistway lighting.
14. Emergency responder radio coverage.

[S] 403.5 Means of egress and evacuation. The *means of egress* in *high-rise buildings* shall comply with Sections 403.5.1 through 403.5.6.

403.5.1 Remoteness of interior exit stairways. Required *interior exit stairways* shall be separated by a distance not less than 30 feet (9144 mm) or not less than one-fourth of the length of the maximum overall diagonal dimension of the building or area to be served, whichever is less. The distance shall be measured in a straight line between the nearest points of the enclosure surrounding the *interior exit stairways*. In buildings with three or more *interior exit stairways*, not fewer than two of the *interior exit stairways* shall comply with this section. Interlocking or *scissor stairways* shall be counted as one *interior exit stairway*.

Exception: In buildings containing primarily Group R occupancies, required interior exit stairways are permitted to be separated by a distance not less than 15 feet (4572 mm).

403.5.2 Additional interior exit stairway. For buildings other than Group R-2 and their ancillary spaces that are more than 420 feet (128 m) in *building height*, one additional *interior exit stairway* meeting the requirements of Sections 1011 and 1023 shall be provided in addition to the minimum number of *exits* required by Section 1006.3. The stairway need only serve floors above the lowest level of exit discharge. The total capacity of any combination of remaining *interior exit stairways* with one *interior exit stairway* removed shall be not less than the total capacity required by Section 1005.1. *Scissor stairways* shall not be considered the additional *interior exit stairway* required by this section.

Interpretation I403.5.2 An additional interior exit stairway is not required when the building above the 420 foot level contains only Group R-2 occupancy. If the building above the 420 foot level contains a Group R-2 and another occupancy, or if the building does not contain a Group R-2 above the 420 foot level, then an additional interior exit stairway is required.

Exceptions:

1. ((~~An~~)) Subject to the approval of the *building official*, an additional *interior exit stairway* shall not be required to be installed in buildings having elevators used for occupant self-evacuation in accordance with Section ((~~3008~~)) 403.6.2.
2. An additional *interior exit stairway* shall not be required for other portions of the building where the highest occupiable floor level in those areas is less than 420 feet (128 m) in *building height*.

403.5.3 Stairway door operation. *Stairway* doors other than the *exit discharge* doors shall be permitted to be locked from the *stairway* side. *Stairway* doors that are locked from the *stairway* side shall be capable of being unlocked simultaneously without unlatching upon a signal from the *fire command center* and shall be capable of being unlocked simultaneously and automatically upon a signal from a fire alarm originating anywhere in the building. When stairway doors are installed that are not locked from the stairway side, wiring shall be installed to facilitate future installations of locking hardware.

403.5.3.1 Stairway communication system. A telephone or other two-way communications system connected to an *approved constantly attended station* shall be provided at not less than every fifth floor in each *stairway*. ((~~where the doors to the *stairway* are locked.~~))

403.5.4 ((~~Smokeproof enclosures~~)) Smoke control in exit stairways. Every required *interior exit stairway* serving floors more than 75 feet (22 860 mm) above the lowest level of fire department vehicle access shall ((~~be a *smokeproof enclosure* in accordance~~)) comply with Sections 909.20 and 1023.11.

Exception: Unless required by other sections of this code, portions of such stairways which serve floors below the level of exit discharge are not required to comply with Sections 909.20 and 1023.11 if the portion of the stairway below the level of exit discharge is separated from the pressurized stairway with not less than 1 hour fire barriers or horizontal assemblies or both.

403.5.5 Luminous egress path markings. Luminous egress path markings shall be provided in accordance with Section 1025.

DRAFT

403.5.6 Emergency escape and rescue. Emergency escape and rescue openings specified in Section 1030 are not required.

403.5.7 Access to roofs. Access to all roof levels with a slope less than 4:12 shall be provided by stairways.

Exception: Access to unoccupied roofs is permitted to be provided by ship's ladders or alternating tread devices.

403.5.8 Termination of required stairways. All required interior exit stairways shall terminate at the roof level with an exterior door complying with Sections 1010.1.1 and 1010.1.2.

[S] 403.6 Elevators. Elevator installation and operation in *high-rise buildings* shall comply with Chapter 30 and ((~~Sections 403.6.1 and 403.6.2~~)) this section.

403.6.1 Fire service access elevator. In buildings with an occupied floor more than 120 feet (36 576 mm) above the lowest level of fire department vehicle access, every floor of the building shall be served by not fewer than two fire service access elevators ((~~, or all elevators, whichever is less, shall be provided~~)) in accordance with ((~~Section 3007~~)) this section. Each fire service access elevator shall have a capacity of not less than 3,500 pounds (1588 kg) and shall comply with Section ((~~3002.4~~)) 3016.12.

Exceptions:

1. Buildings with one elevator shall be provided with one fire service access elevator.
2. Floors below the lowest street-level building entrance are not required to be served by fire service access elevators.
3. Elevators serving only floors less than 75 feet above the lowest street-level building entrance are not required to be fire service access elevators.

403.6.1.1 Machine rooms. Each fire service access elevator shall be served by a different machine or control room.

403.6.1.2 Water protection. An *approved* method to prevent water from infiltrating into the hoistway enclosure from the operation of the *automatic sprinkler system* outside the fire service access elevator lobby shall be provided.

403.6.1.3 Hoistway enclosures. The fire service access elevator hoistway shall be located in a shaft enclosure complying with Section 713.

403.6.1.4 Hoistway lighting. When fire-fighters' emergency operation is active, the entire height of the hoistway shall be illuminated at not less than 1 footcandle (11 lux) as measured from the top of the car of each fire service access elevator.

403.6.1.5 Fire service access elevator lobby. The fire service access elevator shall open into a fire service access elevator lobby in accordance with Sections 403.6.1.5 through 403.6.1.5.5. Egress is permitted through the elevator lobby in accordance with Item 1 of Section 1016.2.

Exception: Where a fire service access elevator has two entrances onto a floor, the second entrance shall be permitted to open into an elevator lobby in accordance with Section 713.14.1.

403.6.1.5.1 Access to interior exit stairway or ramp. The fire service access elevator lobby shall have *direct access* from the enclosed elevator lobby to an enclosure for an interior exit stairway or ramp.

Exception: Access to an *interior exit stairway* or *ramp* shall be permitted to be through a protected path of travel that has a level of fire protection not less than the elevator lobby enclosure. The protected path shall be separated from the enclosed elevator lobby through an opening protected by a smoke and draft control assembly in accordance with Section 716.5.3.

403.6.1.5.2 Lobby enclosure. The fire service access elevator lobby shall be enclosed with a smoke barrier having a fire-resistance rating of not less than 1 hour, except that lobby doorways shall comply with Section 403.6.1.5.3.

Exceptions:

1. Enclosed fire service access elevator lobbies are not required at the *levels of exit discharge*.
2. Enclosed fire service access elevator lobbies are not required for elevators with pressurized hoistways.

403.6.1.5.3 Lobby doorways. Other than doors to the hoistway or elevator control room, each doorway to a fire service access elevator lobby shall be provided with a 3/4-hour *fire door assembly* complying with Section 716.5. The *fire door assembly* shall also comply with the smoke and draft control door assembly requirements of Section 716.5.3.1 with the UL 1784 test conducted without the artificial bottom seal.

403.6.1.5.4 Lobby size. Regardless of the number of fire service access elevators served by the same elevator lobby, the enclosed fire service access elevator lobby shall be not less than 150 square feet (14 m^2) in area with a minimum dimension of 8 feet (2440 mm).

403.6.1.5.5 Fire service access elevator symbol. A pictorial symbol of a standardized design designating which elevators are fire service access elevators shall be installed on each side of the hoistway door frame on the portion of the frame at right angles to the fire service access elevator lobby. The fire service access elevator symbol shall be designed as shown in Figure 403.6.1.5.5 and shall comply with the following:

DRAFT

1. The fire service access elevator symbol shall be not less than 3 inches (76 mm) in height.
2. The helmet shall contrast with the background, with either a light helmet on a dark background or a dark helmet on a light background.
3. The vertical center line of the fire service access elevator symbol shall be centered on the hoistway door frame. Each symbol shall be not less than 78 inches (1981 mm), and not more than 84 (2134 mm) inches above the finished floor at the threshold.

FIGURE 403.6.1.5.5
FIRE SERVICE ACCESS ELEVATOR SYMBOL

403.6.1.6 Elevator system monitoring. The fire service access elevator shall be continuously monitored at the fire command center by a standard emergency service interface system meeting the requirements of NFPA 72.

403.6.1.7 Protection of wiring or cables. Wires or cables that are located outside of the elevator hoistway and machine room and that provide normal or emergency power, control signals, communication with the car, lighting, heating, air conditioning, *ventilation* and fire-detecting systems to fire service access elevators shall be protected by construction having a *fire-resistance rating* of not less than 2 hours, shall be a circuit integrity cable having a *fire-resistance rating* of not less than 2 hours or shall be protected by a listed electrical protective system having a *fire-resistance rating* of not less than 2 hours.

Exception: Wiring and cables to control signals are not required to be protected provided that wiring and cables do not serve Phase II emergency in-car operations.

403.6.1.8 Standpipe hose connection. A Class I standpipe hose connection in accordance with Section 905 shall be provided in the interior exit stairway and ramp having direct access from the fire service access elevator lobby.

403.6.1.8.1 Access. The exit enclosure containing the standpipe shall have access to the floor without passing through the fire service access elevator lobby.

403.6.2 Occupant evacuation elevators. ((~~Where~~)) Elevators installed for compliance with Section 403.5.2, ((~~in accordance with Section 3008, passenger elevators for general public use~~)) shall ((~~be permitted to be used for occupant self-evacuation~~)) comply with Sections 403.6.2.1 through 403.6.2.10.1. Where other elevators are used for occupant self-evacuation, they shall also comply with these sections.

403.6.2.1 Number of occupant evacuation elevators. The number of elevators available for occupant evacuation shall be determined based on an egress analysis that addresses both of the following scenarios:

1. Full building evacuation where the analysis demonstrates that the number of elevators provided for evacuation results in an evacuation time less than one hour.
2. Evacuation of the 4 consecutive floors with the highest cumulative occupant load where the analysis demonstrates that the number of elevators provided for evacuation results in an evacuation time less than 15 minutes. Floors that are not atmospherically separated are considered one floor.

A minimum of one elevator in each elevator group shall be designated for occupant evacuation. Not less than two shall be provided in each occupant evacuation elevator lobby where more than one elevator opens into the lobby. Signage shall be provided to denote which elevators are available for occupant evacuation.

403.6.2.2 Fire safety and evacuation plan. The building shall have an *approved* fire safety and evacuation plan in accordance with the applicable requirements of Section 404 of the International Fire Code. The fire safety and evacuation plan shall incorporate specific procedures for the occupants using evacuation elevators.

403.6.2.3 Operation. The occupant evacuation elevators shall be used for occupant self-evacuation in accordance with the occupant evacuation operation requirements in ASME A17.1/CAS B44 and the building's fire safety and evacuation plan.

403.6.2.4 Water protection. An *approved* method to prevent water from infiltrating into the hoistway enclosure from the operation of the *automatic sprinkler system* outside the enclosed occupant evacuation elevator lobby shall be provided.

403.6.2.5 Hoistway enclosure protection. Occupant evacuation elevator hoistways shall be located in shaft enclosures complying with Section 713.

DRAFT

403.6.2.6 Occupant evacuation elevator lobby. The occupant evacuation elevators shall open into an elevator lobby in accordance with Sections 403.6.2.6 through 403.6.2.6.6. Egress is permitted through the elevator lobby in accordance with Item 1 of Section 1016.2.

403.6.2.6.1 Access to interior exit stairway or ramp. The occupant evacuation elevator lobby shall have *direct access* from the enclosed elevator lobby to an *interior exit stairway* or *ramp*.

Exceptions:

1. Access to an *interior exit stairway* or *ramp* shall be permitted to be through a protected path of travel that has a level of fire protection not less than the elevator lobby enclosure. The protected path shall be separated from the enclosed elevator lobby through an opening protected by a smoke and draft control assembly in accordance with Section 716.5.3.
2. Elevators that only service an open parking garage and the lobby of the building shall not be required to provide direct access in accordance with this section.

403.6.2.6.2 Lobby enclosure. The occupant evacuation elevator lobby shall be enclosed with a smoke barrier having a fire-resistance rating of not less than 1 hour, except that lobby doorways shall comply with Section 403.6.2.6.3.

Exception: Enclosed occupant evacuation elevator lobbies are not required at the levels of exit discharge.

403.6.2.6.3 Lobby doorways. Other than the doors to the hoistway, elevator machine rooms, machinery spaces and control rooms within the lobby enclosure smoke barrier, each doorway to an occupant evacuation elevator lobby shall be provided with a 3/4-hour *fire door assembly* complying with Section 716.5. The *fire door assembly* shall comply with the smoke and draft control assembly requirements of Section 716.5.3.1 with the UL 1784 test conducted without the artificial bottom seal.

403.6.2.6.3.1 Vision panel. A vision panel shall be installed in each *fire door assembly* protecting the lobby doorway. The vision panel shall consist of fire-protection-rated glazing and shall be located to furnish clear vision of the occupant evacuation elevator lobby.

403.6.2.6.3.2 Door closing. Each *fire door assembly* protecting the lobby doorway shall be automatic-closing upon receipt of any fire alarm signal from the *emergency voice/alarm communication system* serving the building.

403.6.2.6.4 Lobby size. Each occupant evacuation elevator lobby shall have minimum floor area as follows:

1. The occupant evacuation elevator lobby floor area shall accommodate, at 3 square feet (0.28 m^2) per person, not less than 25 percent of the occupant load of the floor area served by the lobby.
2. The occupant evacuation elevator lobby floor area also shall accommodate one wheelchair space of 30 inches by 48 inches (760 mm by 1220 mm) for each 50 persons, or portion thereof, of the occupant load of the floor area served by the lobby.

   Exception: The size of lobbies serving multiple banks of elevators shall have the minimum floor area *approved* on an individual basis and shall be consistent with the building's fire safety and evacuation plan.

403.6.2.6.5 Signage. An *approved* sign indicating elevators are suitable for occupant self-evacuation shall be posted on all floors adjacent to each elevator call station serving occupant evacuation elevators.

403.6.2.6.6 Two-way communication system. A two-way communication system shall be provided in each occupant evacuation elevator lobby for the purpose of initiating communication with the fire command center or an alternate location *approved* by the fire department. The two-way communication system shall be designed and installed in accordance with Sections 1009.8.1 and 1009.8.2.

403.6.2.7 Elevator system monitoring. The occupant evacuation elevators shall be continuously monitored at the fire command center or a central control point *approved* by the fire department and arranged to display all of the following information:

1. Floor location of each elevator car.
2. Direction of travel of each elevator car.
3. Status of each elevator car with respect to whether it is occupied.
4. Status of normal power to the elevator equipment, elevator machinery and electrical apparatus cooling equipment where provided, elevator machine room and control room ventilation and cooling equipment.
5. Status of the *emergency power system* that provides backup power to the elevator equipment, elevator machinery and electrical cooling equipment where provided, elevator machine room and control room *ventilation* and cooling equipment.
6. Activation of any fire alarm initiating device in any elevator lobby, elevator machine room, machine space containing a motor controller or electric driving machine, control room or elevator hoistway.

DRAFT

403.6.2.8 Elevator recall. The fire command center or an alternate location *approved* by the fire department shall be provided with the means to manually initiate a Phase I Emergency Recall of the occupant evacuation elevators in accordance with ASME A17.1/CSA B44.

403.6.2.9 Protection of wiring or cables. Wires or cables that are located outside of the elevator hoistway, and machine room and control room and that provide normal or emergency power, control signals, communication with the car, lighting, heating, air conditioning, *ventilation* and fire-detecting systems to occupant evacuation elevators shall be protected by construction having a *fire-resistance rating* of not less than 2 hours, shall be circuit integrity cable having a fire-resistance rating of not less than 2 hours or shall be protected by a listed electrical circuit protective system having a fire-resistance rating of not less than 2 hours.

Exception: Wiring and cables to control signals that do not serve Phase II emergency in-car operations are not required to be protected.

403.6.2.10 Emergency voice/alarm communication system. The building shall be provided with an emergency voice/alarm communication system. The emergency voice/alarm communication system shall be accessible to the fire department. The system shall be provided in accordance with Section 907.5.2.2.

403.6.2.10.1 Notification appliances. No fewer than one audible and one visible notification appliance shall be installed within each occupant evacuation elevator lobby.

[S] 403.7 Emergency operational plan. Prior to the issuance of a Certificate of Occupancy, the owner-occupant of the building shall assign a responsible person as the building's Fire Safety Director to work with the *fire code official* in establishing an operational plan for the building. The operational plan shall contain the guidelines and procedures to be followed and responsibilities of the fire department, building employees, and tenants under emergency conditions, including special provisions for persons with disabilities. The plan shall also include procedures for operation, maintenance and testing of the life safety systems and the allowable use and occupancy of each portion of the building. One copy of the operational plan shall be filed with the *fire code official*, and one shall be posted in the central control station prior to issuance of the Certificate of Occupancy.

[S] 403.8 Signs. Signs complying with Sections 403.8.1 through 403.8.4 shall be provided in *high-rise buildings*.

403.8.1 Elevator lobbies. A sign shall be posted in every elevator lobby above each hall call fixture noting that the elevators will be recalled to the building lobby on fire alarm.

Exception: If *approved* by the *building official*, signs need not be posted in lobbies at the main egress level if the means of egress are obviously identifiable.

403.8.2 Recall floor lobbies. A sign indicating the number of each elevator shall be posted and maintained in the elevator lobby at each designated recall floor and at alternate floors of recall, if provided.

403.8.3 Stair re-entry signs. A sign shall be posted on each floor landing within a stairway indicating where re-entry is provided into the building or indicating the location of telephones or other means of two-way communication.

403.8.4 Other signs. Other signs required by this code, including but not limited to stairway identification signs required by Section 1023.9 and exit signs required by Section 1013, shall be provided.

DRAFT

SECTION 404
ATRIUMS

404.1 General. In other than Group H occupancies, and where permitted by Section 712.1.7, the provisions of Sections 404.1 through 404.10 shall apply to buildings or structures containing vertical openings defined as "Atriums."

[S] 404.1.1 Presubmittal conference. At least 60 days prior to application, the applicant shall arrange a presubmittal conference with the design team, the *building official* and the *fire code official*. The purpose of the meeting is to obtain conceptual approval from the *building official* and the *fire code official*. The documentation of the presubmittal meeting shall be reflected on the plans for the building and become a permanent part of the Department of Construction and Inspection's records.

404.2 Use. The floor of the *atrium* shall not be used for other than low fire hazard uses and only *approved* materials and decorations in accordance with the *International Fire Code* shall be used in the *atrium* space.

Exception: The *atrium* floor area is permitted to be used for any *approved* use where the individual space is provided with an *automatic sprinkler system* in accordance with Section 903.3.1.1.

[S][F] 404.3 Automatic sprinkler protection. An *approved automatic sprinkler system* shall be installed throughout the entire building.

Exceptions:

1. That area of a building adjacent to or above the *atrium* need not be sprinklered provided that portion of the building is separated from the *atrium* portion by not less than 2-hour *fire barriers* constructed in accordance with Section 707 or *horizontal assemblies* constructed in accordance with Section 711, or both.

2. Where the ceiling of the *atrium* is more than 55 feet (16 764 mm) above ((~~the floor~~)) any floor area open to the *atrium*, sprinkler protection at the ceiling of the *atrium* is not required.

[F] 404.4 Fire alarm system. A *fire alarm* system shall be provided in accordance with Section 907.2.13.

404.5 Smoke control. A smoke control system shall be installed in accordance with Section 909.

Exception: In other than Group I-2, and Group I-1, Condition 2, smoke control is not required for *atriums* that connect only two *stories*.

[S] 404.6 Enclosure of atriums. *Atrium* spaces shall be separated from adjacent spaces by a 1-hour *fire barrier* constructed in accordance with Section 707 or a *horizontal assembly* constructed in accordance with Section 711, or both.

Exceptions:

1. A *fire barrier* is not required where a glass wall forming a smoke partition is provided. The glass wall shall comply with all of the following:
   1.1. Automatic sprinklers are provided along both sides of the separation wall and doors, or on the room side only if there is not a walkway on the *atrium* side. The sprinklers shall be located between 4 inches and 12 inches (102 mm and 305 mm) away from the glass and at intervals along the glass not greater than 6 feet (1829 mm). The sprinkler system shall be designed so that the entire surface of the glass is wet upon activation of the sprinkler system without obstruction;
   1.2. The glass wall shall be installed in a gasketed frame in a manner that the framing system deflects without breaking (loading) the glass before the sprinkler system operates; and
   1.3. Where glass doors are provided in the glass wall, they shall be either *self-closing* or automatic-closing.
2. A *fire barrier* is not required where a glass-block wall assembly complying with Section 2110 and having a 3/4-hour *fire protection rating* is provided.
3. A *fire barrier* is not required between the *atrium* and the adjoining spaces of up to three floors of the *atrium* provided that such spaces are accounted for in the design of the smoke control system.
4. A fire barrier is not required between the atrium and the adjoining spaces where the atrium is not required to be provided with a smoke control system.

[S] 5. A fire barrier is not required between the atrium and the adjoining spaces for *atriums* that connect only two *stories.*

Code Alternate CA404.6: The separation between the *atrium* and tenant spaces that are not guest rooms or *dwelling units* is permitted to be omitted on four floors when:

1. The building is of Type IA or IB construction;
2. The perimeter of the opening is protected by draft curtains and a row of automatic sprinklers not more than 6 feet (1829 mm) on center as required for escalator protection;
3. All spaces of the building separated from the atrium by less than 1-hour fire-resistive construction are equipped with an automatic smoke detection system;
4. Tenant spaces open to the *atrium* have access to two *interior exit stairways* separated by one-half the building diagonal with one *exit* located so that occupants can exit in a direction away from the *atrium*. For the purpose of this requirement "away from the *atrium*" means not being forced to *exit* parallel and adjacent to the *atrium* opening. "Areas open to the *atrium*" are those areas that are not separated from the *atrium* with at least a 1-hour fire barrier.

[S][F] 404.7 ((~~Standby~~)) Emergency power system. Equipment required to provide smoke control shall be provided with ((~~standby~~)) an *emergency* power *system* in accordance with Section 909.11.

Code Alternate CA404.7: An *emergency power system* is not required for smoke control systems in buildings that have at least two *exits* and *atriums* with a total volume of less than 40,000 cubic feet (1133 m^3).

404.8 Interior finish. The *interior finish* of walls and ceilings of the *atrium* shall be not less than Class B. Sprinkler protection shall not result in a reduction in class.

404.9 Exit access travel distance. *Exit access* travel distance for areas open to an *atrium* shall comply with the requirements of this section.

404.9.1 Egress not through the atrium. Where required access to the *exits* is not through the *atrium*, *exit access* travel distance shall comply with Section 1017.

404.9.2 Exit access travel distance at the level of exit discharge. Where the path of egress travel is through an *atrium* space, *exit access* travel distance at the *level of exit discharge* shall be determined in accordance with Section 1017.

DRAFT

404.9.3 Exit access travel distance at other than the level of exit discharge. Where the path of egress travel is not at the *level of exit discharge* from the *atrium*, that portion of the total permitted *exit access* travel distance that occurs within the *atrium* shall be not greater than 200 feet (60 960 mm).

404.10 Interior exit stairways. Not greater than 50 percent of *interior exit stairways* are permitted to egress through an *atrium* on the *level of exit discharge* in accordance with Section 1028.

SECTION 405
UNDERGROUND BUILDINGS

[S] 405.1 General. The provisions of Sections 405.2 through 405.9 apply to building spaces having a floor level used for human occupancy more than 30 feet (9144 mm) below the finished floor of the lowest *level of exit discharge*.

Exceptions: The provisions of Section 405 are not applicable to the following buildings or portions of buildings:

1. One- and two-family *dwellings*, sprinklered in accordance with Section 903.3.1.3.
2. Parking garages provided with *automatic sprinkler systems* in compliance with Section 405.3.
3. Fixed guideway transit systems that comply with NFPA 130 as amended.
4. *Grandstands*, *bleachers*, stadiums, arenas and similar facilities.
5. Where the lowest *story* is the only *story* that would qualify the building as an underground building and has an area not greater than 1,500 square feet (139 m^2) and has an *occupant load* less than 10.
6. Pumping stations and other similar mechanical spaces intended only for limited periodic use by service or maintenance personnel.

405.2 Construction requirements. The underground portion of the building shall be of Type I construction.

[F] 405.3 Automatic sprinkler system. The highest *level of exit discharge* serving the underground portions of the building and all levels below shall be equipped with an *automatic sprinkler system* installed in accordance with Section 903.3.1.1. Water-flow switches and control valves shall be supervised in accordance with Section 903.4.

405.4 Compartmentation. Compartmentation shall be in accordance with Sections 405.4.1 through 405.4.3.

405.4.1 Number of compartments. A building having a floor level more than 60 feet (18 288 mm) below the finished floor of the lowest *level of exit discharge* shall be divided into not fewer than two compartments of approximately equal size. Such compartmentation shall extend through the highest *level of exit discharge* serving the underground portions of the building and all levels below.

Exception: The lowest *story* need not be compartmented where the area is not greater than 1,500 square feet (139 m^2) and has an *occupant load* of less than 10.

405.4.2 Smoke barrier penetration. The compartments shall be separated from each other by a *smoke barrier* in accordance with Section 709. Penetrations between the two compartments shall be limited to plumbing and electrical piping and conduit that are firestopped in accordance with Section 714. Doorways shall be protected by *fire door assemblies* that comply with Section 716, automatic-closing by smoke detection in accordance with Section 716.2.6.6 and installed in accordance with NFPA 105 and Section 716.2.2.1. Where provided, each compartment shall have an air supply and an exhaust system independent of the other compartments.

405.4.3 Elevators. Where elevators are provided, each compartment shall have direct access to an elevator. Where an elevator serves more than one compartment, an enclosed elevator lobby shall be provided and shall be separated from each compartment by a s*moke barrier* in accordance with Section 709. Doorways in the smoke barrier shall be protected by fire door assemblies that comply with Section 716, shall comply with the smoke and draft control assembly requirements of Section 716.2.2.1 with the UL 1784 test conducted without an artificial bottom seal, and shall be automatic-closing by smoke detection in accordance with Section 716.2.6.6.

405.5 Smoke control system. A smoke control system shall be provided in accordance with Sections 405.5.1 and 405.5.2.

405.5.1 Control system. A smoke control system is required to control the migration of products of combustion in accordance with Section 909 and the provisions of this section. Smoke control shall restrict movement of smoke to the general area of fire origin and maintain *means of egress* in a usable condition.

405.5.2 Compartment smoke control system. Where compartmentation is required, each compartment shall have an independent smoke control system. The system shall be automatically activated and capable of manual operation in accordance with Sections 907.2.17 and 907.2.18.

[S][F] 405.6 Fire alarm systems. A *fire alarm* system shall be provided where required by Sections 907.2.17 and 907.2.18.

405.7 Means of egress. *Means of egress* shall be in accordance with Sections 405.7.1 and 405.7.2.

405.7.1 Number of exits. Each floor level shall be provided with not fewer than two *exits*. Where compartmentation is required by Section 405.4, each compartment shall have not fewer than one *exit* and not fewer than one *exit access* doorway into the adjoining compartment.

DRAFT

405.7.2 ((~~Smokeproof enclosure~~)) Smoke control in exit stairways. Every required *stairway* serving floor levels more than 30 feet (9144 mm) below the finished floor of its *level of exit discharge* shall comply with ((~~the requirements for a *smoke-proof enclosure* as provided in~~)) Section 1023.11.

[S][F] 405.8 ((~~Standby and emergency~~)) Emergency power system. ((~~A standby power system complying with Section 2702 shall be provided for the standby power loads specified in Section 405.8.1.~~)) An emergency power system complying with Section 2702 shall be provided for the emergency power loads specified in Section 405.8.2.

((~~**[F] 405.8.1 Standby power loads.** The following are classified as standby power loads:~~

~~1. Smoke control system.~~

~~2. *Ventilation* and automatic fire detection equipment for *smokeproof* enclosures.~~

~~3. Elevators, as required in Section 3003.~~))

[F] ((~~405.8.2~~)) 405.8.1 Emergency power loads. The following are classified as emergency power loads:

1. *Emergency voice/alarm communications systems*.
2. *Fire alarm* systems.
3. Automatic fire detection systems.
4. Elevator car lighting.
5. Means of egress and exit sign illumination as required by Chapter 10.
6. Smoke control systems.
7. Ventilation and automatic fire detection equipment for pressurized interior exit stairways.

((~~6~~)) 8. Fire pumps.

9. Lighting for elevator cars, machine rooms, machine spaces and control rooms.
10. Ventilation and automatic fire detection equipment for pressurized stairways and elevator hoistways.
11. A selected elevator in each bank in accordance with Section 3016.6. A bank of elevators is a group of elevators or a single elevator controlled by a common operating system. All elevators that respond to a single call button constitute a bank of elevators. All elevators shall be transferable to an *emergency power system*.

Note: There is no limit on the number of cars that are permitted to be in a bank, but no more than four cars are permitted within a common hoistway. See Section 3016.7.

[F] 405.9 Standpipe system. The underground building shall be equipped throughout with a standpipe system in accordance with Section 905.

DRAFT

SECTION 406
MOTOR-VEHICLE-RELATED OCCUPANCIES

406.1 General. All motor-vehicle-related occupancies shall comply with Section 406.2. Private garages and carports shall also comply with Section 406.3. Open public parking garages shall also comply with Sections 406.4 and 406.5. Enclosed public parking garages shall also comply with Sections 406.4 and 406.6. Motor fuel-dispensing facilities shall also comply with Section 406.7. Repair garages shall also comply with Section 406.8.

Note: The Seattle Electrical Code requires that all occupancies provide one of the following to facilitate future installation of electric vehicle charging outlets:

1. Reserved space in the electrical service equipment for installation of an overcurrent protective device for electric vehicle charging system branch circuits, or
2. A designated location and working clearances for a future electric vehicle charging system panelboard.

See Seattle Electrical Code 220.57 and 625.27 for details.

[S] 406.2 Design. Private garages and carports, open and enclosed public parking garages, motor fuel-dispensing facilities and repair garages shall comply with Sections 406.2.1 through 406.2.9.

406.2.1 Automatic garage door openers and vehicular gates. Automatic garage door openers shall be listed and labeled in accordance with UL 325. Where provided, automatic vehicular gates shall comply with Section 3110.

406.2.2 Clear height. The clear height of each floor level in vehicle and pedestrian traffic areas shall be not less than ((~~7 feet (2134 mm)~~)) 6 feet 6 inches (1981 mm). Canopies under which fuels are dispensed shall have a clear height in accordance with Section 406.7.2.

Exception: A lower clear height is permitted for a parking tier in mechanical-access open parking garages where approved by the building official.

406.2.3 Accessible parking spaces. Where parking is provided, accessible parking spaces, access aisles and vehicular routes serving accessible parking shall be provided in accordance with Section 1106.

406.2.4 Floor surfaces. Floor surfaces shall be of concrete or similar approved noncombustible and nonabsorbent materials. ((~~The area of floor used for the parking of automobiles or other vehicles shall be sloped to facilitate the movement of liquids to a drain or toward the main vehicle entry doorway.~~)) The surface of vehicle fueling pads in motor fuel-dispensing facilities shall be in accordance with Section 406.7.1.

Exceptions:

1. Asphalt parking surfaces shall be permitted at ground level for public parking garages and private carports.

((~~2. Floors of Group S-2 parking garages shall not be required to have a sloped surface.~~

~~3~~)) 2. Slip-resistant, nonabsorbent, interior floor finishes having a critical radiant flux not more than 0.45 W/cm^2, as determined by ASTM E648 or NFPA 253, shall be permitted in repair garages.

406.2.5 Sleeping rooms. Openings between a motor vehicle-related occupancy and a room used for sleeping purposes shall not be permitted.

406.2.6 Fuel dispensing. The dispensing of fuel shall only be permitted in motor fuel-dispensing facilities in accordance with Section 406.7.

406.2.7 Electric vehicle charging stations. Where provided, electric vehicle charging stations shall be installed in accordance with NFPA 70. Electric vehicle charging system equipment shall be listed and labeled in accordance with UL 2202. Electric vehicle supply equipment shall be listed and labeled in accordance with UL 2594. Accessibility to electric vehicle charging stations shall be provided in accordance with Chapter 11.

406.2.8 Mixed occupancies and uses. Mixed uses shall be allowed in the same building as public parking garages and repair garages in accordance with Section 508.1. Mixed uses in the same building as an open parking garage are subject to Sections 402.4.2.3, 406.5.11, 508.1, 510.3, 510.4 and 510.7.

406.2.9 Equipment and appliances. Equipment and appliances shall be installed in accordance with Sections 406.2.9.1 through 406.2.9.3 and the *International Mechanical Code, International Fuel Gas Code* and NFPA 70.

406.2.9.1 Elevation of ignition sources. Equipment and appliances having an ignition source and located in hazardous locations and public garages, private garages, repair garages, automotive motor fuel-dispensing facilities and parking garages shall be elevated such that the source of ignition is not less than 18 inches (457 mm) above the floor surface on which the equipment or appliance rests. For the purpose of this section, rooms or spaces that are not part of the living space of a dwelling unit and that communicate directly with a private garage through openings shall be considered to be part of the private garage.

Exception: Elevation of the ignition source is not required for appliances that are listed as flammable vapor ignition resistant.

406.2.9.1.1 Parking garages. Connection of a parking garage with any room in which there is a fuel-fired appliance shall be by means of a vestibule providing a two-doorway separation, except that a single door is permitted where the sources of ignition in the appliance are elevated in accordance with Section 406.2.9.

Exception: This section shall not apply to appliance installations complying with Section 406.2.9.2 or 406.2.9.3.

406.2.9.2 Public garages. Appliances located in public garages, motor fuel-dispensing facilities, repair garages or other areas frequented by motor vehicles shall be installed not less than 8 feet (2438 mm) above the floor. Where motor vehicles are capable of passing under an appliance, the appliance shall be installed at the clearances required by the appliance manufacturer and not less than 1 foot (305 mm) higher than the tallest vehicle garage door opening.

Exception: The requirements of this section shall not apply where the appliances are protected from motor vehicle impact and installed in accordance with Section 406.2.9.1 and NFPA 30A.

406.2.9.3 Private garages. Appliances located in private garages and carports shall be installed with a minimum clearance of 6 feet (1829 mm) above the floor.

Exception: The requirements of this section shall not apply where the appliances are protected from motor vehicle impact and are installed in accordance with Section 406.2.9.1.

406.3 Private garages and carports. Private garages and carports shall comply with Sections 406.2 and 406.3, or they shall comply with Sections 406.2 and 406.4.

406.3.1 Classification. Private garages and carports shall be classified as Group U occupancies. Each private garage shall be not greater than 1,000 square feet (93 m^2) in area. Multiple private garages are permitted in a building where each private garage is separated from the other private garages by 1-hour *fire barriers* in accordance with Section 707, or 1-hour *horizontal assemblies* in accordance with Section 711, or both.

DRAFT

7. Domestic cooking hoods installed and constructed in accordance with Section 505 of the *International Mechanical Code* shall be provided over cooktops and ranges.
8. Cooktops and ranges shall be protected in accordance with Section 904.13.
9. A shut-off for the fuel and electrical power supply to the cooking equipment shall be provided in a location that is accessible only to staff.
10. A timer shall be provided that automatically deactivates the cooking appliances within a period of not more than 120 minutes.
11. A portable fire extinguisher shall be provided. Installation shall be in accordance with Section 906, and the extinguisher shall be located within a 30-foot (9144 mm) distance of travel from each domestic cooking appliance.

407.3 Corridor wall construction. *Corridor* walls shall be constructed as smoke partitions in accordance with Section 710.

407.3.1 Corridor doors. *Corridor* doors, other than those in a wall required to be rated by Section 509.4 or for the enclosure of a vertical opening or an *exit*, shall not have a required *fire protection rating* and shall not be required to be equipped with *self-closing* or automatic-closing devices, but shall provide an effective barrier to limit the transfer of smoke and shall be equipped with positive latching. Roller latches are not permitted. Other doors shall conform to Section 716.

407.4 Means of egress. Group I-2 occupancies shall be provided with means of egress complying with Chapter 10 and Sections 407.4.1 through 407.4.4. The fire safety and evacuation plans provided in accordance with Section 1002.2 shall identify the building components necessary to support a *defend-in-place* emergency response in accordance with Sections 403 and 404 of the *International Fire Code.*

407.4.1 Direct access to a corridor. Habitable rooms in Group I-2 occupancies shall have an *exit access* door leading directly to a *corridor*.

Exceptions:

1. Rooms with *exit* doors opening directly to the outside at ground level.
2. Rooms arranged as *care suites* complying with Section 407.4.4.

407.4.1.1 Locking devices. Locking devices that restrict access to a care recipient's room from the *corridor* and that are operable only by staff from the *corridor* side shall not restrict the *means of egress* from the care recipient's room.

Exceptions:

1. This section shall not apply to rooms in psychiatric treatment and similar care areas.
2. Locking arrangements in accordance with Section 1010.1.9.7.

407.4.2 Distance of travel. The distance of travel between any point in a Group I-2 occupancy sleeping room, not located in a *care suite*, and an *exit access* door in that room shall be not greater than 50 feet (15 240 mm).

407.4.3 Projections in nursing home corridors. In Group I-2, Condition 1 occupancies, where the corridor width is not less than 96 inches (2440 mm), projections shall be permitted for furniture where all of the following criteria are met:

1. The furniture is attached to the floor or to the wall.
2. The furniture does not reduce the clear width of the corridor to less than 72 inches (1830 mm) except where other encroachments are permitted in accordance with Section 1005.7.
3. The furniture is positioned on only one side of the *corridor*.
4. Each arrangement of furniture is 50 square feet (4.6 m^2) maximum in area.
5. Furniture arrangements are separated by 10 feet (3048 mm) minimum.
6. Placement of furniture is considered as part of the fire and safety plans in accordance with Section 1002.2.

407.4.4 Group I-2 care suites. *Care suites* in Group I-2 shall comply with Sections 407.4.4.1 through 407.4.4.4 and either Section 407.4.4.5 or 407.4.4.6.

407.4.4.1 Exit access through care suites. *Exit* access from all other portions of a building not classified as a *care suite* shall not pass through a *care suite*. In a *care suite* required to have more than one *exit*, one *exit access* is permitted to pass through an adjacent *care suite* provided that all of the other requirements of Sections 407.4 and 1016.2 are satisfied.

[W] 407.4.4.2 Separation. *Care suites* shall be separated from other portions of the building, including other care suites, by a smoke partition complying with Section 710. <u>Partitions within suites are not required to be smoke resistant or fire resistance rated unless required by another section of this code.</u>

[W] 407.4.4.3 Access to corridor. Movement from habitable rooms shall not require passage through more than three doors and 100 feet (30 480 mm) distance of travel within the suite.

DRAFT

((~~**Exception:** The distance of travel shall be permitted to be increased to 125 feet (38 100 mm) where an automatic smoke detection system is provided throughout the *care suite* and installed in accordance with NFPA 72.~~))

407.4.4.4 Doors within care suites. Doors in care suites serving habitable rooms shall be permitted to comply with one of the following:

1. Manually operated horizontal sliding doors permitted in accordance with Exception 9 to Section 1010.1.2.
2. Power-operated doors permitted in accordance with Exception 7 to Section 1010.1.2.
3. Means of egress doors complying with Section 1010.

407.4.4.5 Care suites containing sleeping room areas. Sleeping rooms shall be permitted to be grouped into care suites where one of the following criteria is met:

1. The *care suite* is not used as an *exit access* for more than eight care recipient beds.
2. The arrangement of the *care suite* allows for direct and constant visual supervision into the sleeping rooms by care providers.
3. An automatic smoke detection system is provided in the sleeping rooms and installed in accordance with NFPA 72.

407.4.4.5.1 Area. *Care suites* containing sleeping rooms shall be not greater than 7,500 square feet (696 m^2) in area.

Exception: *Care suites* containing sleeping rooms shall be permitted to be not greater than 10,000 square feet (929 m^2) in area where an automatic smoke detection system is provided throughout the *care suite* and installed in accordance with NFPA 72.

407.4.4.5.2 Exit access. Any sleeping room, or any *care suite* that contains sleeping rooms, of more than 1,000 square feet (93 m^2) shall have not fewer than two *exit access* doors from the *care suite* located in accordance with Section 1007.

407.4.4.6 Care suites not containing sleeping rooms. Areas not containing sleeping rooms, but only treatment areas and the associated rooms, spaces or circulation space, shall be permitted to be grouped into *care suites* and shall conform to the limitations in Sections 407.4.4.6.1 and 407.4.4.6.2.

407.4.4.6.1 Area. *Care suites* of rooms, other than sleeping rooms, shall have an area not greater than 12,500 square feet (1161 m^2).

Exception: *Care suites* not containing sleeping rooms shall be permitted to be not greater than 15,000 square feet (1394 m^2) in area where an automatic smoke detection system is provided throughout the *care suite* in accordance with Section 907.

407.4.4.6.2 Exit access. *Care suites*, other than sleeping rooms, with an area of more than 2,500 square feet (232 m^2) shall have not fewer than two *exit access* doors from the *care suite* located in accordance with Section 1007.

[S] 407.5 Smoke barriers. *Smoke barriers* shall be provided to subdivide every *story* used by persons receiving care, treatment or sleeping into not fewer than two smoke compartments. Smoke barriers shall be provided to subdivide other *stories* with an *occupant load* of 50 or more persons, into not fewer than two *smoke compartments*. The *smoke barrier* shall be in accordance with Section 709.

407.5.1 Smoke compartment size. Stories shall be divided into smoke compartments with an area of not more than 22,500 square feet (2092 m^2) in Group I-2 occupancies.

Exceptions:

1. A smoke compartment in Group I-2, Condition 2 is permitted to have an area of not more than 40,000 square feet (3716 m^2) provided that all patient sleeping rooms within that smoke compartment are configured for single patient occupancy and any suite within the smoke compartment complies with Section 407.4.4.
2. A smoke compartment in Group I-2, Condition 2 without patient sleeping rooms is permitted to have an area of not more than 40,000 square feet (3716 m^2).

407.5.2 Exit access travel distance. The distance of travel from any point in a smoke compartment to a smoke barrier door shall be not greater than 200 feet (60 960 mm).

407.5.3 Refuge area. Refuge areas shall be provided within each *smoke compartment*. The size of the refuge area shall accommodate the occupants and care recipients from the adjoining *smoke compartment*. Where a *smoke compartment* is adjoined by two or more *smoke compartments*, the minimum area of the refuge area shall accommodate the largest *occupant load* of the adjoining compartments. The size of the refuge area shall provide the following:

1. Not less than 30 net square feet (2.8 m^2) for each care recipient confined to bed or stretcher.
2. Not less than 6 square feet (0.56 m^2) for each ambulatory care recipient not confined to bed or stretcher and for other occupants.

DRAFT

Areas or spaces permitted to be included in the calculation of refuge area are *corridors*, sleeping areas, treatment rooms, lounge or dining areas and other low-hazard areas.

407.5.4 Independent egress. A *means of egress* shall be provided from each *smoke compartment* created by *smoke barriers* without having to return through the smoke compartment from which *means of egress* originated. Smoke compartments that do not contain an exit shall be provided with direct access to not less than two adjacent smoke compartments.

407.5.5 Horizontal assemblies. *Horizontal assemblies* supporting *smoke barriers* required by this section shall be designed to resist the movement of smoke. Elevator lobbies shall be in accordance with Section ((~~3006.2~~)) 713.14.

407.6 Automatic-closing doors. Automatic-closing doors with hold-open devices shall comply with Sections 709.5 and 716.2.

[F] 407.7 Automatic sprinkler system. *Smoke compartments* containing sleeping rooms shall be equipped throughout with an *automatic sprinkler* system in accordance with Sections 903.3.1.1 and 903.3.2.

[F] 407.8 Fire alarm system. A *fire alarm* system shall be provided in accordance with Section 907.2.6.

[F] 407.9 Automatic fire detection. *Corridors* in Group I-2, Condition 1 occupancies and spaces permitted to be open to the *corridors* by Section 407.2 shall be equipped with an automatic fire detection system.

Group I-2, Condition 2 occupancies shall be equipped with smoke detection as required in Section 407.2.

Exceptions:

1. *Corridor* smoke detection is not required where sleeping rooms are provided with *smoke detectors* that comply with UL 268. Such detectors shall provide a visual display on the *corridor* side of each sleeping room and an audible and visual alarm at the care provider's station attending each unit.
2. *Corridor* smoke detection is not required where sleeping room doors are equipped with automatic door-closing devices with integral *smoke detectors* on the unit sides installed in accordance with their listing, provided that the integral detectors perform the required alerting function.

407.10 Secured yards. Grounds are permitted to be fenced and gates therein are permitted to be equipped with locks, provided that safe dispersal areas having 30 net square feet (2.8 m^2) for bed and stretcher care recipients and 6 net square feet (0.56 m^2) for ambulatory care recipients and other occupants are located between the building and the fence. Such provided safe dispersal areas shall be located not less than 50 feet (15 240 mm) from the building they serve.

[F] 407.11 Electrical systems. In Group I-2 occupancies, the essential electrical system for electrical components, equipment and systems shall be designed and constructed in accordance with the provisions of Chapter 27 and NFPA 99.

DRAFT

SECTION 408
GROUP I-3

408.1 General. Occupancies in Group I-3 shall comply with the provisions of Sections 408.1 through 408.11 and other applicable provisions of this code (see Section 308.5).

408.2 Other occupancies. Buildings or portions of buildings in Group I-3 occupancies where security operations necessitate the locking of required *means of egress* shall be permitted to be classified as a different occupancy. Occupancies classified as other than Group I-3 shall meet the applicable requirements of this code for that occupancy where provisions are made for the release of occupants at all times.

Means of egress from detention and correctional occupancies that traverse other use areas shall, as a minimum, conform to requirements for detention and correctional occupancies.

Exception: It is permissible to exit through a *horizontal exit* into other contiguous occupancies that do not conform to detention and correctional occupancy egress provisions but that do comply with requirements set forth in the appropriate occupancy, as long as the occupancy is not a Group H use.

408.3 Means of egress. Except as modified or as provided for in this section, the *means of egress* provisions of Chapter 10 shall apply.

408.3.1 Door width. Doors to resident *sleeping units* shall have a clear width of not less than 28 inches (711 mm).

408.3.2 Sliding doors. Where doors in a *means of egress* are of the horizontal-sliding type, the force to slide the door to its fully open position shall be not greater than 50 pounds (220 N) with a perpendicular force against the door of 50 pounds (220 N).

408.3.3 Guard tower doors. A hatch or trap door not less than 16 square feet (610 m^2) in area through the floor and having dimensions of not less than 2 feet (610 mm) in any direction shall be permitted to be used as a portion of the *means of egress* from guard towers.

408.3.4 Spiral stairways. *Spiral stairways* that conform to the requirements of Section 1011.10 are permitted for access to and between staff locations.

[F] 411.5 Emergency voice/alarm communications system. An *emergency voice/alarm communications system* shall be provided in accordance with Sections 907.2.11 and 907.5.2.2, is permitted to serve as a public address system and shall be audible throughout the entire *special amusement building*.

411.6 Exit marking. Exit signs shall be installed at the required *exit* or *exit access doorways* of amusement buildings in accordance with this section and Section 1013. *Approved* directional exit markings shall be provided. Where mirrors, mazes or other designs are utilized that disguise the path of egress travel such that they are not apparent, *approved* and *listed* low-level exit signs that comply with Section 1013.5, and directional path markings *listed* in accordance with UL 1994, shall be provided and located not more than 8 inches (203 mm) above the walking surface and on or near the path of egress travel. Such markings shall become visible in an emergency. The directional exit marking shall be activated by the automatic fire detection system and the *automatic sprinkler system* in accordance with Section 907.2.11.

411.6.1 Photoluminescent exit signs. Where *photoluminescent exit* signs are installed, activating light source and viewing distance shall be in accordance with the listing and markings of the signs.

411.7 Interior finish. The *interior finish* shall be Class A in accordance with Section 803.1.

SECTION 412
AIRCRAFT-RELATED OCCUPANCIES

412.1 General. Aircraft-related occupancies shall comply with Sections 412.1 through 412.7 and the *International Fire Code*.

412.2 Airport traffic control towers. The provisions of Sections 412.2.1 through 412.2.6 shall apply to airport traffic control towers occupied only for the following uses:

1. Airport traffic control cab.
2. Electrical and mechanical equipment rooms.
3. Airport terminal radar and electronics rooms.
4. Office spaces incidental to the tower operation.
5. Lounges for employees, including sanitary facilities.

412.2.1 Construction. The construction of airport traffic control towers shall comply with the provisions of Sections 412.2.1.1 through 412.2.1.3.

412.2.1.1 Type of construction. Airport traffic control towers shall be constructed to comply with the height limitations of Table 412.2.1.1.

TABLE 412.2.1.1
HEIGHT LIMITATIONS FOR AIRPORT TRAFFIC CONTROL TOWERS

TYPE OF CONSTRUCTION	HEIGHT[a] (feet)
IA	Unlimited
IB	240
IIA	100
IIB	85
IIIA	65

For SI: 1 foot = 304.8 mm, 1 square foot = 0.0929 m^2.
a. Height to be measured from grade plane to cab floor.

[BS] 412.2.1.2 Structural integrity of interior exit stairways and elevator hoistway enclosures. Enclosures for interior exit stairways and elevator hoistway enclosures shall comply with Section 403.2.3 in airport traffic control towers where the control cab is located more than 75 feet (22 860 mm) above the lowest level of fire department vehicle access.

412.2.1.3 Sprayed fire-resistant materials (SFRM). The bond strength of the SFRM installed in airport traffic control towers shall be in accordance with Section 403.2.4 where the control cab is located more than 75 feet (22 860 mm) above the lowest level of fire department vehicle access.

412.2.2 Means of egress and evacuation. The means of egress in airport traffic control towers shall comply with Sections 412.2.2.1 through 412.2.2.3.

412.2.2.1 Stairways. Stairways in airport traffic control towers shall be in accordance with Section 1011. Exit stairways shall be ((~~smokeproof enclosures complying with one of the alternatives provided in Section 909.20~~)) pressurized in accordance with Section 909.20 or 909.21.

Exception: Stairways in airport traffic control towers are not required to comply with Section 1011.12.

DRAFT

412.2.2.2 Exit access. From observation levels, airport traffic control towers shall be permitted to have a single means of exit access for a distance of travel not greater than 100 feet (30 480 mm). Exit access stairways from the observation level need not be enclosed.

412.2.2.3 Number of exits. Not less than one *exit stairway* shall be permitted for airport traffic control towers of any height provided that the *occupant load* per floor is not greater than 15 and the area per floor does not exceed 1,500 square feet (140 m^2).

412.2.2.3.1 Interior finish. Where an airport traffic control tower is provided with only one exit stairway, interior wall and ceiling finishes shall be either Class A or Class B.

412.2.2.3.2 Exit separation. Where an airport traffic control tower is equipped throughout with an automatic sprinkler system in accordance with Section 903.3.1.1 and two exits are required, the exit separation distance required by Section 1007 shall be not less than one-fourth of the length of the maximum overall dimension of the area served.

[F] 412.2.3 Emergency systems. The detection, alarm and emergency systems of airport traffic control towers shall comply with Sections 412.2.3.1 through 412.2.3.3.

[F] 412.2.3.1 Automatic smoke detection systems. Airport traffic control towers shall be provided with an automatic smoke detection system installed in accordance with Section 907.2.21.

[F] 412.2.3.2 Fire command center. A fire command center shall be provided in airport traffic control towers where the control cab is located more than 75 feet (22 860 mm) above the lowest level of fire department vehicle access. The fire command center shall comply with Section 911.

Exceptions:

1. The fire command center shall be located in the airport control tower or an adjacent contiguous building where building functions are interdependent.
2. The room shall be not less than 150 square feet (14 m^2) in area with a minimum dimension of 10 feet (3048 mm).
3. The following features shall not be required in an airport traffic control tower fire command center.
   - 3.1. Emergency voice/alarm control unit.
   - 3.2. Public address system.
   - 3.3. Status indicators and controls for the air distributions centers.
   - 3.4. Generator supervision devices, manual start and transfer features.
   - 3.5. Elevator emergency or standby power switches where emergency or standby power is provided.

[F] 412.2.3.3 Smoke removal. Smoke removal in airport traffic control towers shall be provided in accordance with Section 403.4.7.

[F] 412.2.4 Automatic sprinkler system. Where an occupied floor is located more than 35 feet (10 668 mm) above the lowest level of fire department vehicle access, airport traffic control towers shall be equipped with an *automatic sprinkler system* in accordance with Section 903.3.1.1.

[F] 412.2.4.1 Fire pump room. Fire pumps shall be located in rooms that are separated from all other areas of the building by 2-hour fire barriers constructed in accordance with Section 707 or 2-hour horizontal assemblies constructed in accordance with Section 711, or both.

Exception: Separation is not required for fire pumps physically separated in accordance with NFPA 20.

[F] 412.2.5 Protection of elevator wiring and cables. Wiring and cables serving elevators in airport traffic control towers shall be protected in accordance with Section 3007.8.1.

[S] 412.2.5.1 Elevators for occupant evacuation. Where provided in addition to an exit stairway, occupant evacuation elevators shall be in accordance with Section ((~~3008~~)) 403.6.2.

412.2.6 Accessibility. Airport traffic control towers shall be *accessible* except as specified in Section 1104.4.

412.3 Aircraft hangars. Aircraft hangars shall be in accordance with Sections 412.3.1 through 412.3.6.

412.3.1 Exterior walls. *Exterior walls* located less than 30 feet (9144 mm) from *lot lines* or a *public way* shall have a *fire-resistance rating* not less than 2 hours.

412.3.2 Basements. Where hangars have *basements*, floors over *basements* shall be of Type IA construction and shall be made tight against seepage of water, oil or vapors. There shall not be openings or communication between *basements* and the hangar. Access to *basements* shall be from outside only.

412.3.3 Floor surface. Floors shall be graded and drained to prevent water or fuel from remaining on the floor. Floor drains shall discharge through an oil separator to the sewer or to an outside vented sump.

DRAFT

[F] 412.3.6.2 Separation of maximum single fire areas. Maximum single *fire areas* established in accordance with hangar classification and construction type in Table 412.3.6 shall be separated by 2-hour *fire walls* constructed in accordance with Section 706. In determining the maximum single *fire area* as set forth in Table 412.3.6, ancillary uses that are separated from aircraft servicing areas by a *fire barrier* of not less than 1 hour, constructed in accordance with Section 707, shall not be included in the area.

[S] 412.3.6.3 Restrictions in the Fire District. Aircraft hangars shall not be located in the *Fire District* unless work is limited to exchange of parts and maintenance requiring no open flame or welding.

412.4 Residential aircraft hangars. *Residential aircraft hangars* shall comply with Sections 412.4.1 through 412.4.5.

412.4.1 Fire separation. A hangar shall not be attached to a *dwelling* unless separated by a *fire barrier* having a *fire-resistance rating* of not less than 1 hour. Such separation shall be continuous from the foundation to the underside of the roof and unpierced except for doors leading to the *dwelling unit*. Doors into the *dwelling unit* shall be equipped with *self-closing* devices and conform to the requirements of Section 716 with a noncombustible raised sill not less than 4 inches (102 mm) in height. Openings from a hangar directly into a room used for sleeping purposes shall not be permitted.

412.4.2 Egress. A hangar shall provide two *means of egress*. One of the doors into the dwelling shall be considered as meeting only one of the two *means of egress*.

[**F] 412.4.3 Smoke alarms.** *Smoke alarms* shall be provided within the hangar in accordance with Section 907.2.21.

412.4.4 Independent systems. Electrical, mechanical and plumbing drain, waste and vent (DWV) systems installed within the hangar shall be independent of the systems installed within the dwelling. Building sewer lines shall be permitted to be connected outside the structures.

Exception: *Smoke detector* wiring and feed for electrical subpanels in the hangar.

412.4.5 Height and area limits. *Residential aircraft hangars* shall be not greater than 2,000 square feet (186 m^2) in area and 20 feet (6096 mm) in *building height*.

[F] 412.5 Aircraft paint hangars. Aircraft painting operations shall be conducted in an aircraft paint hangar that complies with the provisions of Sections 412.5.1 through 412.5.8. Buildings and structures, or parts thereof, used for the application of flammable finishes shall comply with the applicable provisions of Section 416.

[F] 412.5.1 Occupancy classification. Aircraft paint hangars shall be classified in accordance with the provisions of Section 307.1. Aircraft paint hangars shall comply with the applicable requirements of this code and the *International Fire Code* for such occupancy.

412.5.2 Construction. Aircraft paint hangars shall be of Type I or II construction.

[F] 412.5.3 Spray equipment cleaning operations. Spray equipment cleaning operations shall be conducted in a liquid use, dispensing and mixing room.

[F] 412.5.4 Operations. Only those flammable liquids necessary for painting operations shall be permitted in quantities less than the maximum allowable quantities per *control area* in Table 307.1(1). Spray equipment cleaning operations exceeding the maximum allowable quantities per control area in Table 307.1(1) shall be conducted in a liquid use, dispensing and mixing room.

[F] 412.5.5 Storage. Storage of flammable or combustible liquids exceeding the maximum allowable quantities per control area in Table 307.1(1) shall be in a liquid storage room.

[F] 412.5.6 Fire suppression. Aircraft paint hangars shall be provided with fire suppression as required by NFPA 409.

[F] 412.5.7 Ventilation. Aircraft paint hangars shall be provided with *ventilation* as required in the *International Mechanical Code.*

[F] 412.5.8 Electrical. Electrical equipment and devices within the aircraft paint hangar shall comply with NFPA 70.

[F] 412.5.8.1 Class I, Division I hazardous locations. The area within 10 feet (3048 mm) horizontally from aircraft surfaces and from the floor to 10 feet (3048 mm) above the aircraft surface shall be classified as a Class I, Division I location.

[F] 412.5.8.2 Class I, Division 2 hazardous locations. The area horizontally from aircraft surfaces between 10 feet (3048 mm) and 30 feet (9144 mm) and from the floor to 30 feet (9144 mm) above the aircraft surface shall be classified as a Class I, Division 2 location.

412.6 Aircraft manufacturing facilities. In buildings used for the manufacturing of aircraft, exit access travel distances indicated in Section 1017.1 shall be increased in accordance with the following:

1. The building shall be of Type I or II construction.
2. Exit access travel distance shall not exceed the distances given in Table 412.6.

DRAFT

TABLE 412.6
AIRCRAFT MANUFACTURING EXIT ACCESS TRAVEL DISTANCE

HEIGHT (feet)[b]	MANUFACTURING AREA (sq. ft.)[a]					
	≥ 150,000	≥ 200,000	≥ 250,000	≥ 500,000	≥ 750,000	≥ 1,000,000
≥ 25	400	450	500	500	500	500
≥ 50	400	500	600	700	700	700
≥ 75	400	500	700	850	1,000	1,000
≥ 100	400	500	750	1,000	1,250	1,500

For SI: 1 foot = 304.8 mm.
a. Contiguous floor area of the aircraft manufacturing facility having the indicated height.
b. Minimum height from finished floor to bottom of ceiling or roof slab or deck.

412.6.1 Ancillary areas. Rooms, areas and spaces ancillary to the primary manufacturing area shall be permitted to egress through such area having a minimum height as indicated in Table 412.6. Exit access travel distance within the ancillary room, area or space shall not exceed that indicated in Table 1017.2 based on the occupancy classification of that ancillary area. Total exit access travel distance shall not exceed that indicated in Table 412.6.

[F] 412.7 Heliports and helistops. *Heliports* and *helistops* shall be permitted to be erected on buildings or other locations where they are constructed in accordance with Sections 412.7.1 through 412.7.5.

[F] 412.7.1 Size. The landing area for helicopters less than 3,500 pounds (1588 kg) shall be not less than 20 feet (6096 mm) in length and width. The landing area shall be surrounded on all sides by a clear area having an average width at roof level of 15 feet (4572 mm), and all widths shall be not less than 5 feet (1524 mm).

[F] 412.7.2 Design. Helicopter landing areas and the supports thereof on the roof of a building shall be noncombustible construction. Landing areas shall be designed to confine any flammable liquid spillage to the landing area itself and provisions shall be made to drain such spillage away from any *exit* or *stairway* serving the helicopter landing area or from a structure housing such *exit* or *stairway*. For structural design requirements, see Section 1607.6.

[W] 412.7.3 Means of egress. The *means of egress* from *heliports*, *helipads*, and *helistops* shall comply with the provisions of Chapter 10. Landing areas located on buildings or structures shall have two or more *means of egress.* For landing areas less than 60 feet (18 288 mm) in length or less than 2,000 square feet (186 m^2) in area, the second *means of egress* is permitted to be a fire escape, *alternating tread device* or ladder leading to the floor below. On Group I-2 roofs with heliports or helipads and helistops, rooftop structures enclosing exit stair enclosures or elevator shafts shall be enclosed with fire barriers and opening protectives that match the rating of their respective shaft enclosures below.

[F] 412.7.4 Rooftop heliports and helistops. Rooftop *heliports* and *helistops* shall comply with NFPA 418.

[F] 412.7.5 Standpipe system. In buildings equipped with a standpipe system, the standpipe shall extend to the roof level in accordance with Section 905.3.6.

[S] 412.7.6 Restrictions in the Fire District. Heliports shall not be located in the *Fire District*.

DRAFT

SECTION 413
COMBUSTIBLE STORAGE

413.1 General. High-piled stock or rack storage in any occupancy group shall comply with the *International Fire Code*.

413.2 Attic, under-floor and concealed spaces. *Attic*, under-floor and concealed spaces used for storage of combustible materials shall be protected on the storage side as required for 1-hour fire-resistance-rated construction. Openings shall be protected by assemblies that are *self-closing* and are of noncombustible construction or solid wood core not less than 1-3/4 inch (45 mm) in thickness.

Exception: Neither fire-resistance-rated construction nor opening protectives are required in any of the following locations:

1. Areas protected by *approved automatic sprinkler systems*.
2. Group R-3 and U occupancies.

[S] 413.3 Mini-storage warehouses. In mini-storage warehouse buildings, individual storage lockers shall be separated from each other with fire partitions.

Exception: The separation between individual storage lockers is permitted to be non-rated in rooms 500 square feet (46 m^2) or less in area and in sprinklered rooms of any size.

[S] 413.4 Basement storage and sale of combustible materials. Storage and sale of combustible material in basements shall be in accordance with Sections 413.4.1 through 413.4.5.

Exception: Areas protected with an *approved automatic sprinkler system* that are separated from other areas in the basement by fire barriers with at least a one-hour fire resistance rating are not required to comply with this section.

413.4.1 Storage room size. Combustible material being stored or available for sales shall be placed in rooms no larger than 500 square feet (46.5 m^2).

413.4.2 Storage room construction. Each storage room shall be separated from other areas by fire barriers with at least a one hour fire-resistance rating.

413.4.3 Number of storage rooms. There shall be a maximum of three storage rooms within any one basement.

413.4.4 Storage room access. Each storage room shall be provided with access directly from the building exterior, or through a one-hour fire resistance rated corridor between each room and an exterior door or *exit* enclosure.

413.4.5 Storage room restrictions. Storage rooms shall not contain any material classified as a flammable liquid, hazardous material, or highly combustible material.

SECTION 414
HAZARDOUS MATERIALS

[S][F] 414.1 General. The provisions of Sections 414.1 through 414.6 shall apply to buildings and structures occupied for the manufacturing, processing, dispensing, use or storage of hazardous materials.

[F] 414.1.1 Other provisions. Buildings and structures with an occupancy in Group H shall comply with this section and the applicable provisions of Section 415 and the *International Fire Code*.

[F] 414.1.2 Materials. The safe design of hazardous material occupancies is material dependent. Individual material requirements are found in Sections 307 and 415, the *International Mechanical Code* and the *International Fire Code*.

[F] 414.1.2.1 Aerosol products. Level 2 and 3 aerosol products shall be stored and displayed in accordance with the *International Fire Code*. See Section 311.2 and the *International Fire Code* for occupancy group requirements.

[F] 414.1.3 Information required. A report shall be submitted to the *building official* identifying the maximum expected quantities of hazardous materials to be stored, used in a *closed system* and used in an *open system*, and subdivided to separately address hazardous material classification categories based on Tables 307.1(1) and 307.1(2). The methods of protection from such hazards, including but not limited to *control areas*, fire protection systems and Group H occupancies shall be indicated in the report and on the *construction documents*. The opinion and report shall be prepared by a qualified person, firm or corporation *approved* by the *building official* and provided without charge to the enforcing agency.

For buildings and structures with an occupancy in Group H, separate floor plans shall be submitted identifying the locations of anticipated contents and processes so as to reflect the nature of each occupied portion of every building and structure.

414.1.4 Presubmittal conference. Prior to application for a permit for a Group H-5 Occupancy, the applicant shall arrange a presubmittal conference with the design team, the *building official* and *fire code official* to review the proposed emergency life safety systems for the building and the appropriate protection of the life safety systems. For Group H-4 occupancies, a presubmittal conference is recommended. The purpose of the meeting is to obtain conceptual approval from the *building official* and the *fire code official* of the proposed systems.

Applicants shall bring to the conference preliminary building plans and a draft of the Hazardous Materials Management Plan. The building permit shall not be issued until the *building official* and *fire code official* have *approved*, in writing, the emergency life safety systems for the building and the protection of the life safety systems. The documentation of the presubmittal meeting shall be reflected on the plans for the building and become a permanent part of the Department of Construction and Inspection's records.

414.1.5 Hazardous material areas in buildings over 420 feet in building height. In buildings in which an occupant evacuation elevator is used to comply with Section 403.6.2, no building areas shall contain hazardous materials exceeding the maximum allowable quantities per *control area* as addressed in Section 414.2.

[S][F] 414.2 Control areas. *Control areas* shall comply with Sections 414.2.1 through 414.2.5 and the *International Fire Code*.

Exception: Higher education laboratories in accordance with Section 428 and Chapter 38 of the *International Fire Code*.

[F] 414.2.1 Construction requirements. *Control areas* shall be separated from each other by *fire barriers* constructed in accordance with Section 707 or *horizontal assemblies* constructed in accordance with Section 711, or both.

[F] 414.2.2 Percentage of maximum allowable quantities. The percentage of maximum allowable quantities of hazardous materials per *control area* permitted at each floor level within a building shall be in accordance with Table 414.2.2.

Exception: *Non-production laboratory facilities* are permitted to be in accordance with Section 414.7.

DRAFT

[F] TABLE 414.2.2
DESIGN AND NUMBER OF CONTROL AREAS

STORY		PERCENTAGE OF THE MAXIMUM ALLOWABLE QUANTITY PER CONTROL AREA[a]	NUMBER OF CONTROL AREAS PER STORY	FIRE-RESISTANCE RATING FOR FIRE BARRIERS IN HOURS[b]
Above grade plane	Higher than 9	5	1	2
	7–9	5	2	2
	6	12.5	2	2
	5	12.5	2	2
	4	12.5	2	2
	3	50	2	1
	2	75	3	1
	1	100	4	1
Below grade plane	1	75	3	1
	2	50	2	1
	Lower than 2	Not Allowed	Not Allowed	Not Allowed

a. Percentages shall be of the maximum allowable quantity per control area shown in Tables 307.1(1) and 307.1(2), with all increases allowed in the notes to those tables.

b. Separation shall include fire barriers and horizontal assemblies as necessary to provide separation from other portions of the building.

[F] 414.2.3 Number. The maximum number of *control areas* within a building shall be in accordance with Table 414.2.2.

Exception: *Non-production laboratory facilities* are permitted to be in accordance with Section 414.7.

[F] 414.2.4 Fire-resistance rating requirements. The required *fire-resistance rating* for *fire barriers* shall be in accordance with Table 414.2.2 or Table 414.7 for *non-production laboratory facilities*. The floor assembly of the *control area* and the construction supporting the floor of the *control area* shall have a *fire-resistance rating* of not less than 2 hours.

Exception: The floor assembly of the *control area* and the construction supporting the floor of the *control area* are allowed to be 1-hour fire-resistance-rated in buildings of Types IIA, IIIA, IV and VA construction, provided that both of the following conditions exist:

1. The building is equipped throughout with an *automatic sprinkler system* in accordance with Section 903.3.1.1.
2. The building is three or fewer *stories above grade plane*.

[F] 414.2.5 Hazardous material in Group M display and storage areas and in Group S storage areas. Hazardous materials located in Group M and Group S occupancies shall be in accordance with Sections 414.2.5.1 through 414.2.5.3.

[F] 414.2.5.1 Nonflammable solids and nonflammable and noncombustible liquids. The aggregate quantity of nonflammable solid and nonflammable or noncombustible liquid hazardous materials permitted within a single *control* area of a Group M display and storage area, a Group S storage area or an outdoor *control* area is permitted to exceed the maximum allowable quantities per *control area* specified in Tables 307.1(1) and 307.1(2) without classifying the building or use as a Group H occupancy, provided that the materials are displayed and stored in accordance with the *International Fire Code* and quantities do not exceed the maximum allowable specified in Table 414.2.5(1).

DRAFT

[F] TABLE 414.2.5(2)
MAXIMUM ALLOWABLE QUANTITY OF FLAMMABLE AND COMBUSTIBLE LIQUIDS IN WHOLESALE AND RETAIL SALES OCCUPANCIES PER CONTROL AREA[a]

TYPE OF LIQUID	MAXIMUM ALLOWABLE QUANTITY PER CONTROL AREA (gallons)		
	Sprinklered in accordance with note b densities and arrangements	Sprinklered in accordance with Tables 5704.3.6.3(4) through 5704.3.6.3(8) and 5704.3.7.5.1 of the *International Fire Code*	Nonsprinklered
Class IA	60	60	30
Class IB, IC, II and IIIA	7,500[c]	15,000[c]	1,600
Class IIIB	Unlimited	Unlimited	13,200

For SI: 1 foot = 304.8 mm, 1 square foot = 0.0929 m^2, 1 gallon = 3.785 L, 1 gallon per minute per square foot = 40.75 L/min/m^2.

a. Control areas shall be separated from each other by not less than a 1-hour fire barrier wall.

b. To be considered as sprinklered, a building shall be equipped throughout with an approved automatic sprinkler system with a design providing minimum densities as follows:

1. For uncartoned commodities on shelves 6 feet or less in height where the ceiling height does not exceed 18 feet, quantities are those permitted with a minimum sprinkler design density of Ordinary Hazard Group 2.
2. For cartoned, palletized or racked commodities where storage is 4 feet 6 inches or less in height and where the ceiling height does not exceed 18 feet, quantities are those permitted with a minimum sprinkler design density of 0.21 gallon per minute per square foot over the most remote 1,500-square-foot area.

c. Where wholesale and retail sales or storage areas exceed 50,000 square feet in area, the maximum allowable quantities are allowed to be increased by 2 percent for each 1,000 square feet of area in excess of 50,000 square feet, up to not more than 100 percent of the table amounts. A control area separation is not required. The cumulative amounts, including amounts attained by having an additional control area, shall not exceed 30,000 gallons.

[F] 414.2.5.3 Aerosol products. The maximum quantity of aerosol products in Group M occupancy retail display areas, storage areas adjacent to retail display areas and retail storage areas shall be in accordance with the *International Fire Code*.

[F] 414.3 Ventilation. Rooms, areas or spaces in which explosive, corrosive, combustible, flammable or highly toxic dusts, mists, fumes, vapors or gases are or have the potential to be emitted due to the processing, use, handling or storage of materials shall be mechanically ventilated where required by this code, the *International Fire Code* or the *International Mechanical Code*.

Emissions generated at workstations shall be confined to the area in which they are generated as specified in the *International Fire Code* and the *International Mechanical Code*.

[F] 414.4 Hazardous material systems. Systems involving hazardous materials shall be suitable for the intended application. Controls shall be designed to prevent materials from entering or leaving process or reaction systems at other than the intended time, rate or path. Automatic controls, where provided, shall be designed to be fail safe.

[S][F] 414.5 Inside storage, dispensing and use. The inside storage, dispensing and use of hazardous materials shall be in accordance with Sections 414.5.1 through 414.5.3 of this code and the *International Fire Code.*

[F] 414.5.1 Explosion control. Explosion control shall be provided in accordance with the *International Fire Code* as required by Table 414.5.1 where quantities of hazardous materials specified in that table exceed the maximum allowable quantities in Table 307.1(1) or where a structure, room or space is occupied for purposes involving explosion hazards as required by Section 415 or the *International Fire Code.*

[F] 414.5.2 Emergency or standby power. Where required by the *International Fire Code* or this code, mechanical ventilation, treatment systems, temperature control, alarm, detection or other electrically operated systems shall be provided with emergency or legally required standby power in accordance with Section 2702 and the *International Fire Code*. For storage and use areas for highly toxic or toxic materials, see Sections 6004.2.2.8 and 6004.3.4.2 of the *International Fire Code*.

[F] 414.5.2.1 Exempt applications. Emergency or standby power is not required for the mechanical ventilation systems provided for any of the following:

1. Storage of Class IB and IC flammable and combustible liquids in closed containers not exceeding 6.5 gallons (25 L) capacity.
2. Storage of Class 1 and 2 oxidizers.
3. Storage of Class II, III, IV and V organic peroxides.
4. Storage of asphyxiant, irritant and radioactive gases.

[F] 414.5.2.2 Fail-safe engineered systems. Standby power for mechanical ventilation, treatment systems and temperature control systems shall not be required where an approved fail-safe engineered system is installed.

[F] 414.5.3 Spill control, drainage and containment. Rooms, buildings or areas occupied for the storage of solid and liquid hazardous materials shall be provided with a means to control spillage and to contain or drain off spillage and fire protection water discharged in the storage area where required in the *International Fire Code*. The methods of spill control shall be in accordance with the *International Fire Code.*

DRAFT

[F] 414.6 Outdoor storage, dispensing and use. The outdoor storage, dispensing and use of hazardous materials shall be in accordance with the *International Fire Code*.

[F] 414.6.1 Weather protection. Where weather protection is provided for sheltering outdoor hazardous material storage or use areas, such areas shall be considered outdoor storage or use where the weather protection structure complies with Sections 414.6.1.1 through 414.6.1.3.

[F] 414.6.1.1 Walls. Walls shall not obstruct more than one side of the structure.

Exception: Walls shall be permitted to obstruct portions of multiple sides of the structure, provided that the obstructed area is not greater than 25 percent of the structure's perimeter.

[F] 414.6.1.2 Separation distance. The distance from the structure to buildings, *lot lines*, *public ways* or *means of egress* to a *public way* shall be not less than the distance required for an outside hazardous material storage or use area without weather protection.

[F] 414.6.1.3 Noncombustible construction. The overhead structure shall be of *approved* noncombustible construction with a maximum area of 1,500 square feet (140 m^2).

Exception: The maximum area is permitted to be increased as provided by Section 506.

[S] 414.7 Non-production laboratory facilities. *Non-production laboratory facilities* are permitted to comply with Sections 414.7.1 through 414.7.4.

414.7.1 Maximum allowable quantity per control area. The aggregate amount of hazardous materials in a *control area* shall not exceed the percentage specified in Table 414.7.

414.7.2 Fire-resistance-rating requirements. The required fire-resistance rating for fire barriers shall be in accordance with Table 414.7 for *non-production laboratory facilities*.

414.7.3 Storage. Storage in control areas shall be in accordance with this code and Sections 414.7.3.1 through 414.7.3.2.

414.7.3.1 Density. Storage of Class I flammable liquids shall not exceed 4 gallons per 100 square feet (0.13 L/m^2) of floor area above floor level 6.

414.7.3.2 Container size. Individual containers in storage shall not exceed 1 gallon (3.8 L) for Class I flammable liquids.

414.7.4 Automatic sprinkler system. An *approved automatic sprinkler system* shall be installed throughout a building containing a *non-production laboratory facility*. The sprinkler system shall be designed to protect an ordinary hazard group 2 occupancy.

DRAFT

[S] TABLE 414.7
DESIGN AND NUMBER OF CONTROL AREAS IN NON-PRODUCTION LABORATORY FACILITIES[A]

FLOOR LEVEL		PERCENTAGE OF THE MAXIMUM ALLOWABLE QUANTITY PER CONTROL AREA[B]	NUMBER OF CONTROL AREAS PER FLOOR	FIRE-RESISTANCE RATING FOR FIRE BARRIERS IN HOURS[C, D]
Above Grade Plane	Higher than 20	Not Allowed	Not Allowed	Not Allowed
	6-20	15	2	2
	5	25	2	2
	4	25	2	2
	3	50	2	2
	2	75	2	1
	1	100	2	1
Below Grade Plane	1	75	2	1
	2	50	2	1
	Lower than 2	Not Allowed	Not Allowed	Not Allowed

a. Table 414.7 applies to *non-production laboratory facilities* meeting the criteria of Section 414.7.
b. Percentages shall be of the maximum allowable quantity per control area shown in Tables 307.1(1) and 307.1 (2) with all increases allowed in the footnotes to those tables.
c. Fire barriers shall include walls and floors as necessary to provide separation from other portions of the building.
d. Vertical fire barriers separating control areas from other spaces on the same floor may be one-hour rated.

SECTION 415
GROUPS H-1, H-2, H-3, H-4 AND H-5

[F] 415.1 General. The provisions of Sections 415.1 through 415.11 shall apply to the storage and use of hazardous materials in excess of the maximum allowable quantities per *control area* listed in Section 307.1.

[F] 415.2 Compliance. Buildings and structures with an occupancy in Group H shall comply with the applicable provisions of Section 414 and the *International Fire Code.*

[F] 415.3 Automatic fire detection systems. Group H occupancies shall be provided with an automatic fire detection system in accordance with Section 907.2.

[F] 415.4 Automatic sprinkler system. Group H occupancies shall be equipped throughout with an *automatic sprinkler system* in accordance with Section 903.2.5.

[F] 415.5 Emergency alarms. Emergency alarms for the detection and notification of an emergency condition in Group H occupancies shall be provided as set forth herein.

[F] 415.5.1 Storage. An approved manual emergency alarm system shall be provided in buildings, rooms or areas used for storage of hazardous materials. Emergency alarm-initiating devices shall be installed outside of each interior exit or exit access door of storage buildings, rooms or areas. Activation of an emergency alarm-initiating device shall sound a local alarm to alert occupants of an emergency situation involving hazardous materials.

[F] 415.5.2 Dispensing, use and handling. Where hazardous materials having a hazard ranking of 3 or 4 in accordance with NFPA 704 are transported through corridors, interior exit stairways or ramps, or exit passageways, there shall be an emergency telephone system, a local manual alarm station or an approved alarm-initiating device at not more than 150-foot (45 720 mm) intervals and at each exit and exit access doorway throughout the transport route. The signal shall be relayed to an approved central, proprietary or remote station service or constantly attended on-site location and shall initiate a local audible alarm.

[F] 415.5.3 Supervision. Emergency alarm systems required by Section 415.5.1 or 415.5.2 shall be electrically supervised and monitored by an approved central, proprietary or remote station service or shall initiate an audible and visual signal at a constantly attended on-site location.

[F] 415.5.4 Emergency alarm systems. *Emergency alarm systems* required by Section 415.5.1 or 415.5.2 shall be provided with emergency or standby power in accordance with Section 2702.2.

[S][F] 415.6 Fire separation distance. Group H occupancies shall be located on property in accordance with the other provisions of this chapter. In Groups H-2 and H-3, not less than 25 percent of the perimeter wall of the occupancy shall be an *exterior wall*.

Exceptions:

1. *Liquid use, dispensing and mixing rooms* having a floor area of not more than 500 square feet (46.5 m^2) need not be located on the outer perimeter of the building where they are in accordance with the *International Fire Code* and NFPA 30.
2. *Liquid storage rooms* having a floor area of not more than 1,000 square feet (93 m^2) need not be located on the outer perimeter where they are in accordance with the *International Fire Code* and NFPA 30.
3. Spray paint booths that comply with the *International Fire Code* need not be located on the outer perimeter.

[F] 415.6.1 Group H occupancy minimum fire separation distance. Regardless of any other provisions, buildings containing Group H occupancies shall be set back to the minimum *fire separation distance* as set forth in Sections 415.6.1.1 through 415.6.1.4. Distances shall be measured from the walls enclosing the occupancy to *lot lines*, including those on a public way. Distances to assumed *lot lines* established for the purpose of determining exterior wall and opening protection are not to be used to establish the minimum *fire separation distance* for buildings on sites where explosives are manufactured or used where separation is provided in accordance with the quantity distance tables specified for explosive materials in the *International Fire Code*.

[F] 415.6.1.1 Group H-1. Group H-1 occupancies shall be set back not less than 75 feet (22 860 mm) and not less than required by the *International Fire Code*.

((~~Exception:~~ ~~Fireworks manufacturing buildings separated in accordance with NFPA 1124.~~))

415.6.1.1.1 Restrictions in the Fire District. Group H-1 occupancies shall not be located in the *Fire District*.

[F] 415.6.1.2 Group H-2. Group H-2 occupancies shall be set back not less than 30 feet (9144 mm) where the area of the occupancy is greater than 1,000 square feet (93 m^2) and it is not required to be located in a *detached building*.

415.6.1.2.1 Restrictions in the Fire District. Group H-2 occupancies having a floor area in excess of 500 square feet (46 m^2) are not permitted in the *Fire District*. Group H-3 Occupancies having a floor area in excess of 1,500 square feet (139 m^2) are not permitted in the *Fire District*.

[F] 415.6.1.3 Groups H-2 and H-3. Group H-2 and H-3 occupancies shall be set back not less than 50 feet (15 240 mm) where a *detached building* is required (see Table 415.6.2).

DRAFT

[F] 415.8.3 Water reactives. Group H-2 and H-3 occupancies containing water-reactive materials shall be resistant to water penetration. Piping for conveying liquids shall not be over or through areas containing water reactives, unless isolated by *approved* liquid-tight construction.

Exception: Fire protection piping shall be permitted over or through areas containing water reactives without isolating it with liquid-tight construction.

[F] 415.8.4 Floors in storage rooms. Floors in storage areas for organic peroxides, oxidizers, pyrophoric materials, unstable (reactive) materials and water-reactive solids and liquids shall be of liquid-tight, noncombustible construction.

[F] 415.8.5 Waterproof room. Rooms or areas used for the storage of water-reactive solids and liquids shall be constructed in a manner that resists the penetration of water through the use of waterproof materials. Piping carrying water for other than *approved automatic sprinkler systems* shall not be within such rooms or areas.

[S][F] 415.9 Group H-2. Occupancies in Group H-2 shall be constructed in accordance with Sections 415.9.1 through 415.9.3 and the *International Fire Code*.

[F] 415.9.1 Flammable and combustible liquids. The storage, handling, processing and transporting of flammable and combustible liquids in Group H-2 and H-3 occupancies shall be in accordance with Sections 415.9.1.1 through 415.9.1.9, the *International Mechanical Code* and the *International Fire Code*.

[F] 415.9.1.1 Mixed occupancies. Where the storage tank area is located in a building of two or more occupancies and the quantity of liquid exceeds the maximum allowable quantity for one *control area*, the use shall be completely separated from adjacent occupancies in accordance with the requirements of Section 508.4.

[F] 415.9.1.1.1 Height exception. Where storage tanks are located within a building not more than one story above grade plane, the height limitation of Section 504 shall not apply for Group H.

[F] 415.9.1.2 Tank protection. Storage tanks shall be noncombustible and protected from physical damage. *Fire barriers* or *horizontal assemblies* or both around the storage tanks shall be permitted as the method of protection from physical damage.

[F] 415.9.1.3 Tanks. Storage tanks shall be *approved* tanks conforming to the requirements of the *International Fire Code*.

[F] 415.9.1.4 Leakage containment. A liquid-tight containment area compatible with the stored liquid shall be provided. The method of spill control, drainage control and secondary containment shall be in accordance with the *International Fire Code*.

Exception: Rooms where only double-wall storage tanks conforming to Section 415.9.1.3 are used to store Class I, II and IIIA flammable and combustible liquids shall not be required to have a leakage containment area.

[F] 415.9.1.5 Leakage alarm. An *approved* automatic alarm shall be provided to indicate a leak in a storage tank and room. The alarm shall sound an audible signal, 15 dBa above the ambient sound level, at every point of entry into the room in which the leaking storage tank is located. An *approved* sign shall be posted on every entry door to the tank storage room indicating the potential hazard of the interior room environment, or the sign shall state: WARNING, WHEN ALARM SOUNDS, THE ENVIRONMENT WITHIN THE ROOM MAY BE HAZARDOUS. The leakage alarm shall be supervised in accordance with Chapter 9 to transmit a trouble signal.

[F] 415.9.1.6 Tank vent. Storage tank vents for Class I, II or IIIA liquids shall terminate to the outdoor air in accordance with the *International Fire Code*.

[F] 415.9.1.7 Room ventilation. Storage tank areas storing Class I, II or IIIA liquids shall be provided with mechanical *ventilation*. The mechanical *ventilation* system shall be in accordance with the *International Mechanical Code* and the *International Fire Code*.

[F] 415.9.1.8 Explosion venting. Where Class I liquids are being stored, explosion venting shall be provided in accordance with the *International Fire Code*.

[F] 415.9.1.9 Tank openings other than vents. Tank openings other than vents from tanks inside buildings shall be designed to ensure that liquids or vapor concentrations are not released inside the building.

[F] 415.9.2 Liquefied petroleum gas facilities. The construction and installation of liquefied petroleum gas facilities shall be in accordance with the requirements of this code, the *International Fire Code*, the *International Mechanical Code*, the *International Fuel Gas Code* and NFPA 58.

[F] 415.9.3 Dry cleaning plants. The construction and installation of dry cleaning plants shall be in accordance with the requirements of this code, the *International Mechanical Code*, the ((~~*International*~~)) *Uniform Plumbing Code* and NFPA 32. Dry cleaning solvents and systems shall be classified in accordance with the *International Fire Code*.

[F] 415.10 Groups H-3 and H-4. Groups H-3 and H-4 shall be constructed in accordance with the applicable provisions of this code and the *International Fire Code*.

DRAFT

Two or more operations at a workstation shall not be connected to the same exhaust system where either one or the combination of the substances removed could constitute a fire, explosion or hazardous chemical reaction within the exhaust duct system.

Exhaust ducts penetrating *fire barriers* constructed in accordance with Section 707 or *horizontal assemblies* constructed in accordance with Section 711 shall be contained in a *shaft* of equivalent fire-resistance- rated construction. Exhaust ducts shall not penetrate *fire walls*.

Fire dampers shall not be installed in exhaust ducts.

[F] 415.11.1.7 Transporting hazardous production materials to fabrication areas. HPM shall be transported to *fabrication areas* through enclosed piping or tubing systems that comply with Section 415.11.6, through *service corridors* complying with Section 415.11.3, or in *corridors* as permitted in the exception to Section 415.11.2. The handling or transporting of HPM within *service corridors* shall comply with the *International Fire Code*.

[F] 415.11.1.8 Electrical. Electrical equipment and devices within the *fabrication area* shall comply with ((~~NFPA 70~~)) the *Seattle Electrical Code*. The requirements for hazardous locations need not be applied where the average air change is not less than four times that set forth in Section 415.11.1.6 and where the number of air changes at any location is not less than three times that required by Section 415.11.1.6. The use of recirculated air shall be permitted.

[F] 415.11.1.8.1 Workstations. Workstations shall not be energized without adequate exhaust *ventilation*. See Section 415.11.1.6 for workstation exhaust *ventilation* requirements.

[F] 415.11.2 Corridors. *Corridors* shall comply with Chapter 10 and shall be separated from *fabrication are*as as specified in Section 415.11.1.2. *Corridors* shall not contain HPM and shall not be used for transporting such materials except through closed piping systems as provided in Section 415.11.6.4.

Exception: Where existing *fabrication areas* are altered or modified, HPM is allowed to be transported in existing *corridors*, subject to the following conditions:

1. Nonproduction HPM is allowed to be transported in *corridors* if utilized for maintenance, lab work and testing.
2. Where existing *fabrication areas* are altered or modified, HPM is allowed to be transported in existing *corridors*, subject to the following conditions:
   - 2.1. Corridors. *Corridors* adjacent to the *fabrication area* where the alteration work is to be done shall comply with Section 1020 for a length determined as follows:
     - 2.1.1. The length of the common wall of the *corridor* and the *fabrication area*; and
     - 2.1.2. For the distance along the *corridor* to the point of entry of HPM into the *corridor* serving that *fabrication area*.
   - 2.2. *Emergency alarm system*. There shall be an emergency telephone system, a local manual alarm station or other *approved* alarm-initiating device within *corridors* at not more than 150-foot (45 720 mm) intervals and at each *exit* and doorway. The signal shall be relayed to an *approved* central, proprietary or remote station service or the emergency control station and shall initiate a local audible alarm.
   - 2.3. Pass-throughs. *Self-closing* doors having a *fire protection rating* of not less than 1 hour shall separate pass-throughs from existing *corridors*. Pass-throughs shall be constructed as required for the *corridors* and protected by an *approved automatic sprinkler system*.

[F] 415.11.3 Service corridors. *Service corridors* within a Group H-5 occupancy shall comply with Sections 415.11.3.1 through 415.11.3.4.

[F] 415.11.3.1 Use conditions. *Service corridors* shall be separated from *corridors* as required by Section 415.11.1.2. *Service corridors* shall not be used as a required *corridor*.

[F] 415.11.3.2 Mechanical ventilation. Service corridors shall be mechanically ventilated as required by Section 415.11.1.6 or at not less than six air changes per hour.

[F] 415.11.3.3 Means of egress. The distance of travel from any point in a *service corridor* to an *exit*, *exit access corridor* or door into a *fabrication area* shall be not greater than 75 feet (22 860 mm). Dead ends shall be not greater than 4 feet (1219 mm) in length. There shall be not less than two *exits*, and not more than one-half of the required *means of egress* shall require travel into a *fabrication area*. Doors from *service corridors* shall swing in the direction of egress travel and shall be *self-closing*.

[F] 415.11.3.4 Minimum width. The clear width of a *service corridor* shall be not less than 5 feet (1524 mm), or 33 inches (838 mm) wider than the widest cart or truck used in the *service corridor*, whichever is greater.

[F] 415.11.3.5 Emergency alarm system. *Emergency alarm systems* shall be provided in accordance with this section and Sections 415.5.1 and 415.5.2. The maximum allowable quantity per *control area* provisions shall not apply to *emergency alarm systems* required for HPM.

DRAFT

8. Exhaust *ventilation* flow alarm devices for pyrophoric liquids and Class 3 water-reactive liquids cabinet exhaust *ventilation* systems required in Section 2705.2.3.4 of the *International Fire Code*.

[F] 415.11.10 Emergency power system. An emergency power system shall be provided in Group H-5 occupancies in accordance with Section 2702. The emergency power system shall supply power automatically to the electrical systems specified in Section 415.11.10.1 when the normal electrical supply system is interrupted.

[F] 415.11.10.1 Required electrical systems. ((~~Emergency~~)) An *emergency* power *system* shall be provided for electrically operated equipment and connected control circuits for the following systems:

1. HPM exhaust *ventilation* systems.
2. HPM gas cabinet *ventilation* systems.
3. HPM exhausted enclosure *ventilation* systems.
4. HPM gas room *ventilation* systems.
5. HPM gas detection systems.
6. *Emergency alarm systems.*
7. Manual and automatic *fire alarm* systems.
8. *Automatic sprinkler system* monitoring and alarm systems.
9. Automatic alarm and detection systems for pyrophoric liquids and Class 3 water-reactive liquids required in Section 2705.2.3.4 of the *International Fire Code*.
10. Flow alarm switches for pyrophoric liquids and Class 3 water-reactive liquids cabinet exhaust *ventilation* systems required in Section 2705.2.3.4 of the *International Fire Code*.
11. Electrically operated systems required elsewhere in this code or in the *International Fire Code* applicable to the use, storage or handling of HPM.

[F] 415.11.10.2 Exhaust ventilation systems. Exhaust *ventilation* systems are allowed to be designed to operate at not less than one-half the normal fan speed on the emergency power system where it is demonstrated that the level of exhaust will maintain a safe atmosphere.

[F] 415.11.11 Automatic sprinkler system protection in exhaust ducts for HPM. An *approved automatic sprinkler system* shall be provided in exhaust ducts conveying gases, vapors, fumes, mists or dusts generated from HPM in accordance with Sections 415.11.11.1 through 415.11.11.3 and the *International Mechanical Code*.

[F] 415.11.11.1 Metallic and noncombustible nonmetallic exhaust ducts. An *approved automatic sprinkler system* shall be provided in metallic and noncombustible nonmetallic exhaust ducts where all of the following conditions apply:

1. Where the largest cross-sectional diameter is equal to or greater than 10 inches (254 mm).
2. The ducts are within the building.
3. The ducts are conveying flammable gases, vapors or fumes.

[F] 415.11.11.2 Combustible nonmetallic exhaust ducts. *Automatic sprinkler system* protection shall be provided in combustible nonmetallic exhaust ducts where the largest cross-sectional diameter of the duct is equal to or greater than 10 inches (254 mm).

Exception: Ducts need not be provided with automatic sprinkler protection as follows:

1. Ducts *listed* or *approved* for applications without *automatic sprinkler system* protection.
2. Ducts not more than 12 feet (3658 mm) in length installed below ceiling level.

[F] 415.11.11.3 Automatic sprinkler locations. Sprinkler systems shall be installed at 12-foot (3658 mm) intervals in horizontal ducts and at changes in direction. In vertical ducts, sprinklers shall be installed at the top and at alternate floor levels.

SECTION 416
SPRAY APPLICATION OF FLAMMABLE FINISHES

[F] 416.1 General. The provisions of this section shall apply to the construction, installation and use of buildings and structures, or parts thereof, for the spray application of flammable finishes. Operations and equipment shall comply with the *International Fire Code*.

[F] 416.2 Spray rooms. Spray rooms shall be enclosed with not less than 1-hour *fire barriers* constructed in accordance with Section 707 or *horizontal assemblies* constructed in accordance with Section 711, or both. Floors shall be waterproofed and drained in an *approved* manner.

DRAFT

SECTION 419
LIVE/WORK UNITS

[S] 419.1 General. A *live/work unit* shall comply with Sections 419.1 through 419.9.

Exception: Dwelling or sleeping units that include an office that is less than 10 percent of the area of the *dwelling unit* are permitted to be classified as *dwelling units* with accessory occupancies in accordance with Section 508.2.

419.1.1 Limitations. All of the following shall apply to live/work areas:

1. The *live/work unit* is permitted to be not greater than 3,000 square feet (279 m^2) in area.
2. The nonresidential area is permitted to be not more than 50 percent of the area of each *live/work unit*.

((~~3. The nonresidential area function shall be limited to the first or main floor only of the *live/work unit*.~~

~~4. Not more than five nonresidential workers or employees are allowed to occupy the nonresidential area at any one time.~~))

[S] 419.2 Occupancies. *Live/work units* shall be classified as a Group R-2 or Group R-3 occupancy. Separation requirements found in ((~~Sections 420 and~~)) Section 508 shall not apply within the *live/work unit* where the *live/work unit* is in compliance with Sections 419 and 420. Nonresidential uses that would otherwise be classified as either a Group H or S occupancy shall not be permitted in a *live/work unit*.

Exception: Storage shall be permitted in the *live/work unit* provided that the aggregate area of storage in the nonresidential portion of the *live/work unit* shall be limited to 10 percent of the space dedicated to nonresidential activities.

419.3 Means of egress. Except as modified by this section, the *means of egress* components for a *live/work unit* shall be designed in accordance with Chapter 10 for the function served.

419.3.1 Egress capacity. The egress capacity for each element of the *live/work unit* shall be based on the occupant load for the function served in accordance with Table 1004.5.

419.3.2 Spiral stairways. *Spiral stairways* that conform to the requirements of Section 1011.10 shall be permitted.

419.4 Vertical openings. Floor openings between floor levels of a *live/work unit* are permitted without enclosure.

[S][F] 419.5 Fire protection. The *live/work unit* shall be provided with a monitored *fire alarm* system where required by Section 907.2.9. ((~~and an~~)) An *automatic sprinkler system* shall be provided in accordance with:

1. Section ((903.2.8)) 903.3.1.2 or 903.3.1.3 for Group R occupancies in buildings with four or fewer *dwelling units* that do not exceed two *stories* in height that are less than 5,000 square feet in area; or
2. Section 903.3.1.1 for all other buildings.

[S] 419.6 Structural. Floors within a *live/work unit* shall be designed for the live loads in Table 1607.1, based on the function within the space. The nonresidential portion of the unit shall be designed for a live load of not less than 50 psf.

419.7 Accessibility. Accessibility shall be designed in accordance with Chapter 11 for the function served.

Interpretation I419.7: Accessibility provisions for Group M occupancies shall be applied unless the applicant specifies another occupancy.

419.8 Ventilation. The applicable *ventilation* requirements of the *International Mechanical Code* shall apply to each area within the *live/work unit* for the function within that space.

419.9 Plumbing facilities. The nonresidential area of the *live/work unit* shall be provided with minimum plumbing facilities as specified by Chapter 29, based on the function of the nonresidential area. Where the nonresidential area of the *live/work unit* is required to be *accessible* by Section 1107.6.2.1, the plumbing fixtures specified by Chapter 29 shall be *accessible*.

SECTION 420
GROUPS I-1, R-1, R-2, R-3 AND R-4

[S] 420.1 General. Occupancies in Groups I-1, R-1, R-2, R-3 and R-4 shall comply with the provisions of Sections 420.1 through ((~~420.10~~)) 420.14 and other applicable provisions of this code.

[W] 420.2 Separation walls. Walls separating *dwelling units* in the same building, walls separating *sleeping units* in the same building and walls separating *dwelling* or *sleeping units* from other occupancies contiguous to them in the same building shall be constructed as *fire partitions* in accordance with Section 708. Buildings containing multiple sleeping units with common use or central kitchens shall not be classified as a single dwelling.

DRAFT

Exceptions:

1. Where sleeping units include private bathrooms, walls between bedrooms and the associated private bathrooms are not required to be constructed as fire partitions.
2. Where sleeping units are constructed as suites, walls between bedrooms within the sleeping unit and the walls between the bedrooms and associated living spaces are not required to be constructed as fire partitions.
3. In Group R-3 facilities, walls within the dwelling units or sleeping units are not required to be constructed as fire partitions.
4. Groups R-2 and I-1 arranged into residential sleeping suites containing a maximum of five sleeping residents. Separation between bedrooms, living areas and toilet rooms within these residential sleeping suites shall not be required.
5. Group I-1 sleeping areas arranged so that a dedicated staff member has direct observation over a multiple resident sleeping room, without intervening full height walls, shall not be required to provide fire partitions within the resident sleeping area.

Interpretation I420: Separation provisions of Section 508 apply in addition to the separation requirements of Section 420.

420.3 Horizontal separation. Floor assemblies separating *dwelling units* in the same buildings, floor assemblies separating *sleeping units* in the same building and floor assemblies separating *dwelling* or *sleeping units* from other occupancies contiguous to them in the same building shall be constructed as *horizontal assemblies* in accordance with Section 711.

[F] 420.4 Automatic sprinkler system. Group R occupancies shall be equipped throughout with an *automatic sprinkler system* in accordance with Section 903.2.8. Group I-1 occupancies shall be equipped throughout with an *automatic sprinkler system* in accordance with Section 903.2.6. Quick-response or residential automatic sprinklers shall be installed in accordance with Section 903.3.2.

[F] 420.5 Fire alarm systems and smoke alarms. Fire alarm systems and smoke alarms shall be provided in Group I-1, R-1 and R-2 occupancies in accordance with Sections 907.2.6, 907.2.8 and 907.2.9, respectively. Single- or multiple-station smoke alarms shall be provided in Groups I-1, R-2, R-3 and R-4 in accordance with Section 907.2.10.

420.6 Smoke barriers in Group I-1, Condition 2. Smoke barriers shall be provided in Group I-1, Condition 2 to subdivide every story used by persons receiving care, treatment or sleeping and to provide other stories with an occupant load of 50 or more persons, into not fewer than two smoke compartments. Such stories shall be divided into smoke compartments with an area of not more than 22,500 square feet (2092 m^2) and the distance of travel from any point in a smoke compartment to a smoke barrier door shall not exceed 200 feet (60 960 mm). The smoke barrier shall be in accordance with Section 709.

420.6.1 Refuge area. Refuge areas shall be provided within each smoke compartment. The size of the refuge area shall accommodate the occupants and care recipients from the adjoining smoke compartment. Where a smoke compartment is adjoined by two or more smoke compartments, the minimum area of the refuge area shall accommodate the largest occupant load of the adjoining compartments. The size of the refuge area shall provide the following:

1. Not less than 15 net square feet (1.4 m^2) for each care recipient.
2. Not less than 6 net square feet (0.56 m^2) for other occupants.

Areas or spaces permitted to be included in the calculation of the refuge area are corridors, lounge or dining areas and other low-hazard areas.

420.7 Group I-1 assisted living housing units. In Group I-1 occupancies, where a fire-resistance corridor is provided in areas where assisted living residents are housed, shared living spaces, group meeting or multipurpose therapeutic spaces open to the corridor shall be in accordance with all of the following criteria:

1. The walls and ceilings of the space are constructed as required for corridors.
2. The spaces are not occupied as resident sleeping rooms, treatment rooms, incidental uses in accordance with Section 509, or hazardous uses.
3. The open space is protected by an automatic fire detection system installed in accordance with Section 907.
4. In Group I-1, Condition 1, the corridors onto which the spaces open are protected by an automatic fire detection system installed in accordance with Section 907, or the spaces are equipped throughout with quick-response sprinklers in accordance with Section 903.3.2.
5. In Group I-1, Condition 2, the corridors onto which the spaces open, in the same smoke compartment, are protected by an automatic fire detection system installed in accordance with Section 907, or the smoke compartment in which the spaces are located is equipped throughout with quick-response sprinklers in accordance with Section 903.3.2.
6. The space is arranged so as not to obstruct access to the required exits.

DRAFT

420.11.3 Smoke and carbon monoxide alarm requirements. Alarms shall be installed in such a manner so that the detection device warning is audible from all areas of the dwelling upon activation of a single alarm.

420.11.4 Escape windows and doors. Every sleeping room shall be provided with emergency escape and rescue windows as required by Section 1030. No alternatives to the sill height such as steps, raised platforms or other devices placed by the openings will be approved as meeting this requirement.

420.11.5 Grab bar general requirements. Where facilities are designated for use by adult family home clients, grab bars for water closets, bathtubs and shower stalls shall be installed according to ICC A117.1.

420.11.6 Shower stalls. Where provided to meet the requirements for bathing facilities, the minimum size of shower stalls for an adult family home shall be 30 inches deep by 48 inches long.

[S] 420.12 Licensed care cooking facilities. In Group I-1, Condition 2 assisted living facilities licensed under chapter 388-78A WAC and residential treatment facilities licensed under chapter 246-337 WAC, rooms or spaces that contain a cooking facility with domestic cooking appliances shall be permitted to be open to the corridor where all of the following criteria are met:

1. The number of care recipients housed in the smoke compartment is not greater than 30.
2. The number of care recipients served by the cooking facility is not greater than 30.
3. Only one cooking facility area is permitted in a smoke compartment.
4. The types of domestic cooking appliances permitted are limited to ovens, cooktops, ranges, warmers and microwaves.
5. The corridor is a clearly identified space delineated by construction or floor pattern, material or color.
6. The space containing the domestic cooking facility shall be arranged so as not to obstruct access to the required exit.
7. A domestic cooking hood installed and constructed in accordance with Section 505 of the International Mechanical Code is provided over the cooktop or range.
8. The domestic cooking hood provided over the cooktop or range shall be equipped with an automatic fire-extinguishing system of a type recognized for protection of domestic cooking equipment. Pre-engineered automatic extinguishing systems shall be tested in accordance with UL 300A and listed and labeled for the intended application. The system shall be installed in accordance with this code, its listing and the manufacturer's instructions.
9. A manual actuation device for the hood suppression system shall be installed in accordance with Sections 904.12.1 and 904.12.2.
10. An interlock device shall be provided such that upon activation of the hood suppression system, the power or fuel supply to the cooktop or range will be turned off.
11. A shut-off for the fuel and electrical power supply to the cooking equipment shall be provided in a location that is accessible only to staff.
12. A timer shall be provided that automatically deactivates the cooking appliances within a period of not more than 120 minutes.
13. A portable fire extinguisher shall be installed in accordance with Section 906 of the International Fire Code.

420.13 Roof-ceiling soffits. Roof-ceiling soffits in *dwelling units* and sleeping units shall be provided with a minimum of 1/2-inch (13 mm) gypsum wallboard in buildings of Types IIB, IIIB and VB construction.

[S] 420.14 Security from criminal activity in Group R.

420.14.1 Group R occupancies other than one- and two-family dwellings. All housing units except one- and two-family *dwellings* shall comply with Section 420.14.1.

420.14.1.1 Definition. For the purposes of this section, "housing unit" is any *dwelling unit* or guest room.

420.14.1.2 Building entrance doors and locks. Building entrance doors shall be without openings and shall be as capable of resisting forcible entry as a flush solid core wood door 1-3/8 inches (35 mm) thick.

Exceptions:

1. Building entrance doors are permitted to have visitor-observation ports that do not impair the fire resistance of the door.
2. Main entrance doors are permitted to be framed or unframed non-shattering glass, framed 1/4-inch (6 mm) plate glass or other security glazing.
3. Building entrance doors other than main entrance doors are permitted to have glazed openings. Glazed openings shall have wire, grilles or security glazing to prevent operation of the door latch from outside by hand or instrument.

Building entrance doors shall be self-closing, self-locking and equipped with a dead-locking latch bolt with at least a 1/2-inch (13 mm) throw that shall penetrate the striker at least 1/4 inch (6 mm).

DRAFT

Exceptions:

1. Building entrance doors that open directly into a housing unit shall comply with Section 420.14.1.4.
2. Garage-to-building doors need not be self-locking when the garage-to-exterior door is equipped with an electrically-operated remote control device for opening and automatically closing.
3. When either the garage-to-exterior doors or garage-to-building doors are equipped for self-closing and self-locking, the other need not be so equipped.

420.14.1.3 Locks. All *exit* doors, including those from individual housing units, shall be openable from the interior without use of keys or special knowledge or effort.

420.14.1.4 Housing unit doors and locks. Doors from interior *corridors* to individual housing units shall not have glass openings and shall be as capable of resisting forcible entry as a flush solid core wood door 1-3/8 (35 mm) inches thick.

Every entrance door to a housing unit shall have a dead bolt or dead-locking latch bolt with at least a 1/2-inch (13 mm) throw that penetrates the striker not less than 1/4 inch (6 mm). In hotels and other multi-unit buildings that provide housing for rent on a daily or weekly basis, every entrance door to a housing unit shall also be provided with a chain door guard or barrel bolt on the inside.

420.14.1.5 Observation ports. Every entrance door to a housing unit, other than transparent doors, shall have a visitor-observation port. The port shall not impair the fire resistance of the door. Observation ports shall be installed not less than 54 inches (1372 mm) and not more than 66 inches (1676 mm) above the floor.

420.14.1.6 Non-exit doors. Doors to storage, maintenance and building service rooms shall be self-closing and self-locking.

420.14.1.7 Sliding doors. Dead bolts or other *approved* locking devices shall be provided on all sliding doors. These locks shall be installed so that the mounting screws for the lock cases are inaccessible from the outside.

420.14.1.8 Windows. Openable windows shall have operable inside latching devices.

Exception: Windows with sills located 10 feet (3048 mm) or more above grade, or 10 feet (3048 mm) or more above a deck, balcony or porch that is not readily accessible from grade except through a housing unit need not have operable inside latching devices.

420.14.2 One- and two-family dwellings. One- and two-family *dwellings* shall comply with Section 420.14.2.

420.14.2.1 Building entrance locks. Building entrance doors, including garage doors, shall be capable of locking. They shall be equipped with a dead-locking latch bolt with at least a 1/2-inch (13 mm) throw that penetrates the striker not less than 1/4 inch (6 mm). Building entrance doors shall be openable from the inside without use of a key or special knowledge or effort.

Exception: Garage-to-exterior doors are permitted to be equipped with an electronically-operated remote control device for opening and closing in lieu of a dead-locking latch bolt. When garage-to-exterior doors are equipped with remote control devices, garage-to-building doors need not be capable of locking.

420.14.2.2 Observation ports. Every building entrance door, other than garage doors, shall have a visitor observation port or glass side light. Observation ports shall be installed at a height of not less than 54 inches (1372 mm) and not more than 66 inches (1676 mm) from the floor.

420.14.2.3 Windows and sliding doors. Dead bolts or other *approved* locking devices shall be provided on all sliding doors and openable windows. The lock shall be installed so that the mounting screws for the lock case are inaccessible from the outside.

Exception: Windows with sills located 10 feet (3048 mm) or more above grade, or 10 feet (3048 mm) or more above a deck, balcony or porch that is not readily accessible from grade except through a housing unit need not have operable inside latching devices.

420.14.3 Alternate security devices. Subject to the approval of the *building official*, alternate security devices are permitted to be substituted for those required by this Section 420.14. Alternate devices shall have equal capability to resist illegal entry. The installation of the device shall not conflict with other requirements of this code and other ordinances regulating the safety of exiting.

DRAFT

SECTION 421
HYDROGEN FUEL GAS ROOMS

[F] 421.1 General. Where required by the *International Fire Code*, hydrogen fuel gas rooms shall be designed and constructed in accordance with Sections 421.1 through 421.7.

➡ **[F] 421.2 Location.** Hydrogen fuel gas rooms shall not be located below grade.

[F] 421.3 Design and construction. Hydrogen fuel gas rooms not classified as Group H shall be separated from other areas of the building in accordance with Section 509.1.

[F] 421.3.1 Pressure control. Hydrogen fuel gas rooms shall be provided with a ventilation system designed to maintain the room at a negative pressure in relation to surrounding rooms and spaces.

[F] 421.3.2 Windows. Operable windows in interior walls shall not be permitted. Fixed windows shall be permitted where in accordance with Section 716.

[F] 421.4 Exhaust ventilation. Hydrogen fuel gas rooms shall be provided with mechanical exhaust ventilation in accordance with the applicable provisions of Section 502.16.1 of the *International Mechanical Code*.

[F] 421.5 Gas detection system. Hydrogen fuel gas rooms shall be provided with a *gas detection system* that complies with Sections 421.5.1, 421.5.2, and 916.

[F] 421.5.1 System activation. Activation of a gas detection alarm shall result in both of the following:

1. Initiation of distinct audible and visible alarm signals both inside and outside of the hydrogen fuel gas room.
2. Automatic activation of the mechanical exhaust ventilation system.

[F] 421.5.2 Failure of the gas detection system. Failure of the *gas detection system* shall automatically activate the mechanical exhaust ventilation system, stop hydrogen generation, and cause a trouble signal to sound at an approved location.

[F] 421.6 Explosion control. Explosion control shall be provided where required by Section 414.5.1.

[S][F] 421.7 ((~~Standby~~)) <u>Legally required standby</u> power. Mechanical *ventilation* and gas detection systems shall be provided with a standby power system in accordance with Section 2702.

SECTION 422
AMBULATORY CARE FACIILITIES

422.1 General. Occupancies classified as *ambulatory care facilities* shall comply with the provisions of Sections 422.1 through 422.6 and other applicable provisions of this code.

422.2 Separation. *Ambulatory care facilities* where the potential for four or more care recipients are to be *incapable of self-preservation* at any time shall be separated from adjacent spaces, *corridors* or tenants with a *fire partition* installed in accordance with Section 708.

[S] 422.3 Smoke compartments. Where the aggregate area of one or more *ambulatory care facilities* is greater than 10,000 square feet (929 m^2) on one *story*, the *story* shall be provided with a *smoke barrier* to subdivide the *story* into not fewer than two *smoke compartments*. The area of any one such *smoke compartment* shall be not greater than 22,500 square feet (2090 m^2). The distance of travel from any point in a *smoke compartment* to a *smoke barrier* door shall be not greater than 200 feet (60 960 mm). The *smoke barrier* shall be installed in accordance with Section 709 with the exception that *smoke barriers* shall be continuous from outside wall to an outside wall, a floor to a floor, or from a *smoke barrier* to a *smoke barrier* or a combination thereof.

422.3.1 Means of egress. Where ambulatory care facilities require smoke compartmentation in accordance with Section 422.3, the fire safety evacuation plans provided in accordance with Section 1002.2 shall identify the building components necessary to support ((~~a *defend-in-place* emergency response in accordance with~~)) Sections 403 and 404 of the *International Fire Code*.

422.3.2 Refuge area. Not less than 30 net square feet (2.8 m^2) for each nonambulatory care recipient shall be provided within the aggregate area of *corridors*, care recipient rooms, treatment rooms, lounge or dining areas and other low-hazard areas within each *smoke compartment*. Each occupant of an *ambulatory care facility* shall be provided with access to a refuge area without passing through or utilizing adjacent tenant spaces.

422.3.3 Independent egress. A *means of egress* shall be provided from each *smoke compartment* created by smoke barriers without having to return through the *smoke compartment* from which *means of egress* originated.

[F] 422.4 Automatic sprinkler systems. *Automatic sprinkler systems* shall be provided for *ambulatory care facilities* in accordance with Section 903.2.2.

[F] 422.5 Fire alarm systems. A *fire alarm* system shall be provided for *ambulatory care facilities* in accordance with Section 907.2.2.

[F] 422.6 Electrical systems. In ambulatory care facilities, the essential electrical system for electrical components, equipment and systems shall be designed and constructed in accordance with the provisions of Chapter 27 and NFPA 99.

DRAFT

1. Buffing operations are equipped with an *approved* continuous automatic water-spray system directed at the point of cutting action.
2. Buffing machines are connected to particle-collecting systems providing a minimum air movement of 1,500 cubic feet per minute (cfm) (0.71 m^3/s) in volume and 4,500 feet per minute (fpm) (23 m/s) in-line velocity.
3. The collecting system shall discharge the rubber particles to an *approved* outdoor noncombustible or fire-resistant container, which is emptied at frequent intervals to prevent overflow.

SECTION 427
MEDICAL GAS SYSTEMS

[S][F] 427.1 General. Medical gases at health care-related facilities intended for patient ((~~or veterinary~~)) care, inhalation or sedation, including but not limited to, analgesia systems for dentistry, podiatry, veterinary and similar uses shall comply with Sections 427.2 through 427.2.3 in addition to other requirements of this code and Chapter 53 of the *International Fire Code*.

[S][F] 427.2 Interior supply location. Medical gases shall be ((~~located~~)) stored in areas dedicated to the storage of such gases without other storage or uses. Where containers of medical gases in quantities greater than the permitted amount are located inside the buildings, they shall be located in a 1-hour exterior room, 1-hour interior room or a gas cabinet in accordance with Section 427.2.1, 427.2.2 or 427.2.3, respectively. Rooms or areas where medical gases are stored or used in quantities exceeding the maximum allowable quantity per control area as set forth in ((~~Tables 307.1(1) and 307.1(2)~~)) *International Fire Code* Section 5003.1 shall ((~~be in accordance~~)) comply with the requirements for Group H occupancies.

[F] 427.2.1 One-hour exterior room. A 1-hour exterior room shall be a room or enclosure separated from the remainder of the building by fire barriers constructed in accordance with Section 707 or horizontal assemblies constructed in accordance with Section 711, or both, with a fire-resistance rating of not less than 1 hour. Openings between the room or enclosure and interior spaces shall be provided with self-closing smoke- and draft-control assemblies having a fire protection rating of not less than 1 hour. Rooms shall have not less than one exterior wall that is provided with not less than two vents. Each vent shall have a minimum free ((~~air~~)) opening area of ((~~not less than 36~~)) 24 square inches (((~~232~~)) 155 cm^2) for each 1,000 cubic feet (28 m^3) at normal temperature and pressure (NTP) of gas stored in the room and shall be not less than 72 square inches (465 cm^2) in aggregate free opening area. One vent shall be within 6 inches (152 mm) of the floor and one shall be within 6 inches (152 mm) of the ceiling. Rooms shall be provided with not fewer than one automatic fire sprinkler to provide container cooling in case of fire.

[F] 427.2.2 One-hour interior room. Where an exterior wall cannot be provided for the room, ((~~a 1-hour interior room or enclosure shall be provided and separated from the remainder of the building by fire barriers constructed in accordance with Section 707 or horizontal assemblies constructed in accordance with Section 711, or both, with a fire-resistance rating of not less than 1 hour. Openings between the room or enclosure and interior spaces shall be provided with self-closing smoke- and draft-control assemblies having a fire protection rating of not less than 1 hour. An~~)) automatic sprinklers ((~~system~~)) shall be installed within the room. The room shall be exhausted through a duct to the exterior. Supply and exhaust ducts shall be enclosed in a 1-hour rated shaft enclosure from the room to the exterior. Approved mechanical ventilation shall comply with the *International Mechanical Code* and be provided with a minimum rate of 1 cubic foot per minute per square foot (0.00508 $m^3/s/m^2$) of the area of the room.

[F] 427.2.3 Gas cabinets. Gas cabinets shall be constructed in accordance with Section 5003.8.6 of the *International Fire Code* and shall comply with the following:

((~~1. Cabinets shall be exhausted to the exterior through a dedicated exhaust duct system installed in accordance with Chapter 5 of the *International Mechanical Code*.~~

~~2~~)) 1. ((~~Supply and exhaust ducts shall be enclosed in a 1-hour rated shaft enclosure from the cabinet to the exterior.~~)) The average velocity of ventilation at the face of access ports or windows shall be not less than 200 feet per minute (1.02 m/s) with a minimum of 150 feet per minute (0.76 m/s) at any point of the access port or window.

2. They shall be connected to an exhaust system.
3. Cabinets shall be provided with an automatic sprinkler system internal to the cabinet.

[S] 427.3 Exterior supply locations. Oxidizer medical gas systems located on the exterior of a building with quantities greater than the permit amount shall be located in accordance with *International Fire Code* Section 6304.2.1.

SECTION 428
HIGHER EDUCATION LABORATORIES

[F] 428.1 Scope. *Higher education laboratories* complying with the requirements of Sections 428.1 through 428.4 shall be permitted to exceed the maximum allowable quantities of hazardous materials in control areas set forth in Tables 307.1(1) and 307.1(2) without requiring classification as a Group H occupancy. Except as specified in Section 428, such laboratories shall comply with all applicable provisions of this code and the *International Fire Code*.

DRAFT

[F] 428.3.9 Automatic fire-extinguishing systems. Buildings containing laboratory suites shall be equipped throughout with an approved automatic sprinkler system in accordance with Section 903.3.1.1.

[F] 428.4 Percentage of maximum allowable quantity in each laboratory suite. The percentage of maximum allowable quantities of hazardous materials in each laboratory suite shall be in accordance with Table 428.3.

[S] SECTION 429
WATERFRONT STRUCTURES: PIERS, WHARVES AND BUILDINGS

429.1 Scope. Structures with at least 20 percent or 8,000 square feet (743 m^2), whichever is greater, of their area over water shall comply with Section 429. They shall also comply with all other requirements of this code unless otherwise specified in Section 429. Unless otherwise specified, all wood dimensions are nominal size as defined in Section 202.

Exceptions:

1. Fire-resistance-rated walls specified in Section 429.6.6 are permitted to be used as one-hour fire-resistance-rated fire barriers and as a separation between *repair garages* not classified as Group S-1 and occupancies in Group A, including the specified opening protection in buildings of Types IIB, IV and VB construction.
2. Structures accessory to Group R-3 occupancies.
3. Floating homes that comply with the Seattle Residential Code.

See Chapter 36 of the Fire Code for additional requirements for fire protection systems for *marinas*.

429.2 Allowable area and height for waterfront structures. The height of structures to be built over water shall be measured as provided in Title 23 of the Seattle Municipal Code, Sections 23.60A.952 and 23.60A.930 for Shoreline Districts. Height and area shall comply with the requirements of Chapter 5, except that the increases allowed in Section 507 are not applicable to waterfront structures.

Exceptions:

1. In *covered boat moorages*, the areas in Table 506.2 are permitted to be increased not more than 400 percent when an *approved automatic sprinkler system* is provided throughout.
2. Each covered area of a boat moorage is permitted to be considered a separate building subject to the following conditions:
   - 2.1. Maximum individual areas shall be 8,000 square feet (743 m^2). The maximum width of connecting walkways shall be 10 feet (3048 mm).
   - 2.2. Walkways, finger *piers* and other decked areas shall not exceed 30 percent of the area of the roof that extends over water.
   - 2.3. Covered areas shall be separated by not less than 16 feet (4877 mm). The intervening areas are permitted to be used for moorage provided the adjacent covered areas comply with Item 2.4 below.
   - 2.4. Covered roof areas constructed in a manner that would trap smoke or hot gases shall be provided with the following:
     - 2.4.1 Vents or monitors of not less than 5 percent of the roof area.
     - 2.4.2 A draft stop of splined or tongue-and-groove planking not less than 1 inch (25 mm) in thickness, 1/2-inch (13 mm) exterior-type plywood or 26 gauge steel shall extend across the end of each roof area when the roof is closer than 30 feet (9144 mm) to an adjacent building. The draft stop shall extend to not less than 24 inches (610 mm) below the lower edge of the roof. A draft stop constructed in accordance with Section 429.5.2 shall be provided under the walkway at each location where draft stops are required at the end of roofed areas.

429.3 Accessory uses. Uses accessory to the principal occupancy shall be permitted, provided they are conducted in an area separated from the moorage area by not less than 16 feet (4877 mm) and the exposed side of the moorage area is protected by a one-hour fire-resistance-rated fire barrier extending 2-1/2 feet (762 mm) above the roof line. One-*story superstructures* shall be permitted for accessory uses but shall not exceed 1,000 square feet (93 m^2) in area nor 20 feet (6096 mm) in height.

Exception: Storage is allowed in the moorage area, provided it conforms to the following:

1. One unprotected moorage equipment locker of not more than 150 cubic feet (115 m^3) is permitted for each *slip*.
2. Where groups of three or more lockers are provided, they shall be separated from each other with one-hour fire-resistance-rated fire partitions, and openings in the separation shall have one-hour protection.
3. Storage of flammable liquids shall be in accordance with NFPA 31 and the Fire Code.

DRAFT

429.4 Location on property. Exterior walls shall have fire resistance and opening protection as determined by Section 705.

Exceptions:

1. Fire resistance-rated construction and opening protection required because of proximity to property lines are permitted to be omitted for waterfront structures that are located on the same property, separated by an unobstructed deck not less than 16 feet (4877 mm) wide, and have a draft stop constructed according to Section 429.4.2 installed in the *substructure* between the buildings.
2. In *covered boat moorages*, exterior walls that are built entirely over water are permitted to be of tongue-and-groove or splined planks not less than 2 inches (51 mm) in thickness, covered with 26 gauge sheet metal, 3/8-inch (9.5 mm) exterior type plywood or equivalent on both sides, regardless of proximity to property lines. Walls at the *substructure* are permitted to be constructed as specified in Section 429.5.2 for draft stops. Where such walls (even though part of such *covered boat moorage*) are built on land, this exception shall not apply.

429.5 Substructure.

429.5.1 Construction. *Substructures* are permitted to be of any type of construction permitted in this code subject to the area limitations of Section 429.2, except that, when constructed of wood, the members shall not be less than the following in any dimension, exclusive of piling:

MEMBER	SIZE UNLIMITED USE × 25.4 FOR MM	PIERS FOR BOAT MOORAGE ONLY, NOT EXCEEDING 10 FEET (3048 MM) IN WIDTH ´ 25.4 FOR MM
Caps and girders	8"	6"
Joists, beams and other members	4"	3"
Flooring or deck	3" T & G or splined or 4" square edged	2"
Bracing	3"	2"

For SI: 1 inch = 25.4 mm

429.5.1.1 Flooring for covered piers. If the flooring or deck is under a roof or is used for parking, there shall be applied over the flooring or deck a tight-fitting wearing surface of softwood not less than 2 inches (51 mm) thick and not more than 6 inches (152 mm) wide, 1-inch (25 mm) thick hardwood, 2-inch (51 mm) thick asphaltic concrete or other material of equivalent fire resistance.

Exception: Covered *piers* used for moorage only need not have a wearing surface.

429.5.2 Draft stops. Draft stops shall be installed in all *substructures* constructed of combustible materials, exclusive of piling and pile bracing. They shall be placed not more than 100 feet (2540 mm) apart measured along the main axis of the *pier* or *wharf*. They shall fit tightly around all joists, beams, etc., and extend from the underside of the deck to city datum if over salt water or to low water if over fresh water. See Section 429.6.7 for draft stops in *superstructures*.

Substructure draft stops shall be constructed of at least two layers of lumber not less than 2 inches (51 mm) in thickness laid with broken joints or materials of equal fire resistance.

429.6 Superstructure.

429.6.1 Construction. *Superstructures* are permitted to be of any type of construction permitted by this code subject to the height and area limitations of Section 429.2 and the requirements of this section.

429.6.2 Floors. See Section 429.6.

429.6.3 Exterior walls. Exterior walls of Types IIA, IIB, III, IV and V buildings, when not subject to the requirements of Section 429.4 because of their proximity to property lines, are permitted to be constructed of matched or lapped lumber not less than 2 inches (51 mm) thick and not more than 6 inches (153 mm) wide, or not less than 1 inch (25 mm) thick with a weather covering of noncombustible material applied directly to the wood. Fireblocking is an assembly having a three-fourths-hour fire- protection rating when fire-resistive openings are required by Sections 705 and 1028.

429.6.4 Roof coverings. Roof coverings shall be fire-retardant as specified in Chapter 15.

429.6.5 Roof construction. In Type IV buildings the roof is permitted to be constructed of corrugated galvanized steel attached directly to wood or steel purlins in lieu of that specified in Section 602.4.

429.6.6 Fire-resistance-rated walls. In Types IIA, IIB, III, IV and V buildings, there shall be at least one fire-resistance-rated wall from the deck to at least 3 feet (914 mm) above the roof for each 500 feet (152 m) of length. Areas greater than l00,000 square feet (9290 m^2) shall be divided with such fire-resistance-rated walls. There shall be a draft stop constructed as specified in Section 429.6.2, installed in the *substructure* immediately below every required fire-resistance-rated wall when the deck is of combustible materials.

Fire-resistance-rated walls shall be constructed as required for two-hour fire-resistance-rated walls or are permitted to consist of at least two layers of tongue-and-groove or splined lumber, not less than 2 inches (51 mm) thick and not more than 6

DRAFT

inches (153 mm) wide, with a sheet of not less than No. 26 gauge galvanized steel or 3/8-inch (3.2 mm) exterior type plywood between the two layers, placed vertically with broken joints, or equivalent fire-resistive construction.

Openings in fire-resistance-rated walls shall be protected by opening protectives having a one and one-half hour fire protection rating.

429.6.7 Draft stops. *Superstructure* draft stops shall be installed as specified in Section 718. *Substructure* draft stops constructed as specified in Section 429.6.2 shall be installed in line with the *superstructure* draft stops above. See Section 429.11 for draft curtain requirements.

429.6.8 Means of egress. Means of egress shall be provided as specified in Chapter 10.

Exceptions:

1. Where two means of egress are required from an occupancy, they shall not terminate on the same open deck.
2. An open deck is permitted to be considered an exit court and shall not be less than 10 feet (3048 mm) in width.
3. In Group A occupancies, the maximum travel distance shall not be more than 75 percent of that specified in Section 1017.
4. Boat moorages that have no sales, service or repair facilities are permitted to have a single means of egress not less than 3 feet (914 mm) wide and shall be exempt from the requirements of Section 1017 if a Class I standpipe is provided as specified in Section 429.8.

429.7 Width of piers. Floats, *piers* and walkways shall provide an *aisle* not less than 3 feet 6 inches (1067 mm) in width for the purpose of fire department access.

Exception: Floats, *piers* and walkways that are less than 40 feet (12192 mm) in length and that are not open to the public.

429.8 Standpipe systems. A manual Class I standpipe system (or Class III standpipe system when *approved* by the *fire code official*) in accordance with NFPA Standard 14 shall be provided for *piers*, wharves, and floats where the hose lay distance from the fire apparatus to the most remote accessible portion of the *pier*, *wharf* or float exceeds 150 feet (45720 mm). *Approved* plastic pipe may be used when installed underwater, or other *approved* method of protection from fire is provided. The standpipe piping shall be a minimum of 4 inches (102 mm), sized to provide a minimum of 500 gpm at 130 psi at the most remote hose connection, with a simultaneous flow of 500 gpm at the third most remote hose connection on the same *pier* while maintaining a maximum system pressure of 175 psi. Existing standpipe systems providing equivalent performance to the specification listed above may be acceptable when *approved* by the *fire code official*.

429.8.1 Hose connections. Hose connection stations on required standpipes shall be provided at the water end of the *pier*, *wharf*, or float, and along the entire length of the *pier*, *wharf*, or float at spacing not to exceed 150 feet (45720 mm) and as close as practical to the land end.

Exception: The hose connection at the land end of the *pier*, *wharf* or float may be omitted when a hose connection is located within 150 feet (45,720 mm) of the fire apparatus access road.

Each hose connection shall consist of a valved 2-1/2-inch (64 mm) fire department hose outlet. Outlet caps shall have a predrilled 1/8-inch (3.2 mm) hole for pressure relief and be secured with a short length of chain or cable to prevent falling after removal. Listed equipment shall be used.

429.8.2 Hose stations. Hose stations on required standpipes shall be provided at spacing not to exceed 100 feet, with the first hose station located as close as practicable to the land end of the *pier*. Each hose station shall have 100 feet of 1½-inch hose mounted on a reel or rack and enclosed within an *approved* cabinet. A valved 2½-inch fire department hose outlet shall be provided at each hose station. Outlet caps shall have a 1/8-inch predrilled hole for pressure relief and be secured with a short length of chain or cable to prevent falling after removal. Listed equipment shall be used. Hose stations shall be labeled FIRE HOSE-EMERGENCY USE ONLY.

429.8.3 Freeze protection. Standpipe systems shall be maintained dry when subject to freezing temperatures, and always from November 1 through March 31. The 1½-inch hose stations shall be tagged out of service when the system is drained. The main water supply control valve shall be readily accessible and clearly labeled so that the system may be quickly restored to full service during periods when the system is drained down.

Exception: Other methods of freeze protection, such as listed freeze valves, are permitted to be provided when *approved* by the *fire code official*.

429.9 Automatic sprinklers.

429.9.1 Covered boat moorage. Automatic sprinklers shall be provided for *covered boat moorage* exceeding 500 square feet in projected roof area per *pier*, *wharf* or float.

The sprinkler system shall be designed and installed in accordance with NFPA 13 for Extra Hazard Group 2 occupancy.

If sprinklers are required by this section, they shall be extended to any structure on the *pier*, *wharf* or float exceeding 500 square feet in projected roof area.

DRAFT

429.9.2 Substructure. Automatic sprinklers shall be installed under the *substructure* of every new waterfront structure in accordance with NFPA 307 and as specified in Chapter 9.

Exception: Sprinklers are not required in the following locations:

1. Combustible *substructures* whose deck area does not exceed 8,000 square feet (743.2 m^2) supporting no *superstructures*.
2. Combustible *substructures* whose deck area does not exceed 8,000 square feet (743.2 m^2) supporting *superstructures* not required to be provided with an *approved automatic sprinkler system* as specified in Section 429.9.3.
3. Noncombustible *substructures* with or without *superstructures*.
4. *Substructures*, over other than tidal water, where sprinkler heads cannot be installed with a minimum clearance of 4 feet (1219 mm) above mean high water.
5. *Substructures* resulting from walkways or finger *piers* that do not exceed l0 feet (3048 mm) in width.

429.9.3 Superstructure. Automatic sprinklers shall be provided in *superstructures* as required by Chapter 9.

429.9.4 Monitoring. Sprinkler systems shall be monitored by an *approved* central station service.

429.10 Smoke and heat vents. *Approved* automatic smoke and heat vents shall be provided in *covered boat moorage* areas exceeding 2,500 square feet (232 m^2) in area, excluding roof overhangs.

Exception: Smoke and heat vents are not required in areas protected by automatic sprinklers.

429.10.1 Design and installation. Where smoke and heat vents are required they shall be installed near the roof peak, evenly distributed and arranged so that at least one vent is over each covered berth. The effective vent area shall be calculated using a ratio of one square foot of vent to every fifteen square feet of covered berth area (1:15). Each vent shall provide a minimum opening size of 4 feet by 4 feet.

429.10.2 Automatic operation. Smoke and heat vents shall operate automatically by actuation of a heat-responsive device rated at between 100° F (56° C) and 220° F (122° C) above ambient.

Exception: Gravity-operated drop out vents.

429.10.3 Gravity-operated drop out vents. Gravity operated dropout vents shall fully open within five minutes after the vent cavity is exposed to a simulated fire represented by a time-temperature gradient that reaches an air temperature of 500 F (260° C) within five minutes.

429.11 Draft curtains. Draft curtains shall be provided in *covered boat moorage* areas exceeding 2,500 square feet (232 m^2) in area, excluding roof overhangs.

Exception: Draft curtains are not required in areas protected by automatic sprinklers.

429.11.1 Draft curtain construction. Draft curtains shall be constructed of sheet metal, gypsum board or other *approved* materials that provide equivalent performance to resist the passage of smoke. Joints and connections shall be smoke tight.

429.11.2 Draft curtain location and depth. The maximum area protected by draft curtains shall not exceed 2,000 square feet (186 m^2) or two *slips* or berths, whichever is smaller. Draft curtains shall not extend past the piling line. Draft curtains shall have a minimum depth of 2 feet (609 mm) below the lower edge of the roof and shall not extend closer than 8 feet (2438 mm) to the walking surface on the *pier*.

429.12 Fire department connections. Standpipe and sprinkler systems shall be equipped with not less than a two-way 2½-inch fire department connection, which shall be readily visible and located at the fire department apparatus access. The fire department connection for Class I standpipe systems may be located at the shore end of the *pier*, *wharf*, or float if the distance between the fire apparatus access road and fire department connection is less than 150 feet (45720 mm). See Section 507 of the *International Fire Code* for requirements for fire hydrants.

429.13 Marina fire protection confidence testing. Standpipe and sprinkler systems shall be inspected and tested in compliance with the *International Fire Code*.

429.14 Fire department access. Fire department apparatus access lanes, not less than 20 feet wide and capable of supporting a 50,000-pound vehicle or 24,000 pounds per axle (HS20 loading), shall be provided and so located as to provide fire department apparatus access to within 50 feet travel distance to the shore end of all *piers*, wharves and floats.

DRAFT

[S] SECTION 430
PRIVATE AND UTILITY TRANSFORMER VAULTS

Note: Seattle City Light may have additional standards that supersede the requirements in this section.

430.1 Scope. Vaults housing private and utility transformers shall comply with the provisions of this chapter and Article 450 of the *Seattle Electrical Code*. The provisions of this chapter are minimum standards for all transformer vaults. Vaults containing utility transformers or equipment are required to comply with additional requirements of Seattle City Light.

430.2 When required.

430.2.1. Utility transformers. Transformer vaults are required for all utility transformers located inside a building. Seattle City Light shall approve the size, location, and layout of all utility vaults.

Exception: Vaults are not required for certain dry-type transformers rated 600 volts or less.

430.2.2 Private transformers. Transformer vaults are required for all oil-insulated private transformers. Vaults are required for other private transformers rated over 35,000 volts that are located inside a building.

Exception: Vaults are not required for certain oil-insulated private transformers in accordance with Sections 450.26 and 450.27 of the Seattle Electrical Code.

Note: Article 450, Part II of the Seattle Electrical Code contains requirements for transformers not required to be in a vault.

430.3 Access to transformer vaults.

430.3.1 General access. At least one door or hatch shall be provided in every vault. The opening shall be adequate in size to permit the installation and removal of the equipment located in the vault, and shall be kept unobstructed at all times. An unobstructed level area shall be provided at the entrance to all vaults. The level area shall be large enough to allow for movement of the transformer and equipment into and out of the vault.

430.3.2 Utility transformer vault access. *Utility transformer vaults* shall be accessible to Seattle City Light personnel at all times. If it is necessary to pass through locked doors to reach a vault, keys to those doors shall be kept in a key box that can be opened with the key to the transformer vault. The key box shall be mounted near the first door requiring a non-transformer door key. Persons other than Seattle City Light personnel shall not have access to *utility transformer vaults* without Seattle City Light personnel present.

All doors between the vault and the building exterior shall be large enough to accommodate the placement or removal of transformers. See Section 430.6 for doorway requirements.

Utility transformer vaults shall be located so that there is an equipment access path between the vault and the building exterior. The path shall comply with the following.

1. Sufficient horizontal and vertical clearance for the required transformer shall be provided;
2. The floor shall be smooth, without seams or ridges to impede transportation of heavy equipment;
3. There shall not be excessive slope as determined by Seattle City Light; and
4. The floor shall be designed to support the weight of the transformer and all equipment needed to move the transformer.

If Seattle City Light determines that it is infeasible to design a path in the prescribed manner, the building owner shall enter into a Transportation Agreement with Seattle City Light. The Transportation Agreement obligates the building owner to transport equipment between the right of way and the transformer vault whenever the Superintendent of Seattle City Light determines it is necessary, and to pay all costs for equipment transportation.

Note: The Transportation Agreement is a measure of last-resort and permitted only with prior Seattle City Light approval. A viable path for equipment transportation between the right-of-way and the transformer vault should be a primary design consideration.

430.4 Location of transformer vaults. Transformer vaults shall be located where they can be ventilated to the outside air without using flues or ducts wherever such an arrangement is practicable. Transformer vaults shall be dry and not subject to running, standing or infiltration of water.

Transformer vaults shall not be located where they are subject to flooding due to ground water without specific written approval by Seattle City Light.

DRAFT

430.5 Construction.

430.5.1 Private transformer vaults. *Private transformer vaults* shall comply with the following minimum requirements.

1. All *private transformer vaults* shall be of at least three-hour fire-resistive construction.

   Exception: Subject to the approval of the *building official*, where the total capacity of private oil-insulated transformers does not exceed 112-1/2 kVA, the vault is permitted to be constructed of reinforced concrete not less than 4 inches (102 mm) thick.
2. Vault floors in contact with the earth shall be of concrete not less than 4 inches thick.
3. The transformer shall be anchored to inserts embedded in the concrete floor.
4. In pre-tensioned or post-tensioned concrete, cable locations shall be permanently marked on the surface of the concrete over the encased tendons.
5. Vault dimensions shall be adequate for required ventilation and working clearances.

430.5.2 Utility transformer vaults. *Utility transformer vaults* shall comply with the following minimum requirements. The Superintendent of Seattle City Light is authorized to adjust the requirements of this Section 430.5.2 when deemed necessary.

1. Floors, walls and ceilings of *utility transformer vaults* shall have at least a three-hour fire-resistance rating and shall be constructed of solid concrete or concrete-filled concrete masonry units at least 6 inches (152 mm) thick.
2. Vault floors shall be smooth with no pads.
3. Seismic anchor inserts shall be embedded in the floor and steel support channels shall be embedded in the ceiling when required by the Superintendent of Seattle City Light.
4. Pre-tensioned or post-tensioned concrete shall have the cable locations permanently marked on the surface of the concrete over the encased tendons.
5. Vault dimensions shall depend upon physical size and number of secondary connection devices, working clearances, and shall be *approved* by the Superintendent of Seattle City Light.

430.5 Openings into transformer vaults. Transformer vault openings shall comply with this section and Sections 705.8.2 and 705.8.3.

430.5.1 Protection of openings. All doorways opening into a transformer vault from the building interior shall be protected by opening protectives having a fire-protection rating equal to that required for the vault.

430.5.2 Doorways. All doors shall be made of three-hour fire-resistance-rated steel and shall swing out of the vault 180 degrees. Doors that may be prevented from swinging 180 degrees outward as a result of blockage by vehicles or mobile equipment shall be protected by bollards. The bollards shall preserve the door swing area and shall not obstruct the doorway. Equipment access doorways shall be sized to accommodate the transformer placement and removal including the equipment necessary to place or remove the transformer.

Equipment access doorways to vaults containing only single-phase utility transformers shall have clear openings no less than 42 inches (1067 mm) wide and 6 feet 8 inches (2057 mm) high. Equipment access doorways for all other utility transformers shall be sized to accommodate the transformer placement and as specified by Seattle City Light to allow equipment installation and removal.

Doorways for personnel access shall have clear openings of at least 36 inches (914 mm) wide and 6 feet 8 inches (2057 mm) high.

430.5.2.1 Locks. All doors shall be equipped with locks and shall be kept locked. Doors to *utility transformer vaults* shall be equipped with a cylinder capable of accepting the core provided by the utility. Personnel doors shall be equipped with panic bars, pressure plates, or other devices that are normally latched but open under simple pressure.

430.5.2.2 Oil containment sill. A removable oil containment sill shall be as high as necessary to contain the oil of one transformer but in no case less than 4 inches (203 mm) high or as specified by Seattle City Light for utility transformers. A sill shall be installed within the vault at each doorway after the installation of the transformer.

430.7 Ventilation systems for transformer vaults.

430.7.1 General. Ventilation systems shall be provided to dispose of heat from transformer total losses without creating a temperature rise that exceeds the transformer rating.

430.7.2 Method of ventilation. Ventilation shall be provided by either natural circulation or mechanical circulation.

430.7.2.1 Natural circulation. Transformer vaults containing up to three transformers of no more than 75 kVA each are permitted to be ventilated by natural circulation. The combined minimum net intake and exhaust vent area, exclusive of area occupied by screens, grating or louvers, shall not be less than 3 square inches (1935 mm^2) per kVA of transformer capacity. The total required area shall be divided roughly equally between intake and exhaust. In no case shall either the intake or exhaust area be less than 72 square inches (46 452 mm^2).

DRAFT

Approximately one half the total area required for ventilation openings shall be for intake air. Intake air vents shall be located in one or more openings in the lower portion of the perimeter vault walls. When the vault is located in a garage, any lower openings must be at least 18 inches above the garage floor level. The remaining one half of the required ventilation area shall be used to exhaust heat through one or more openings in the upper portion of the perimeter walls or roof of the vault. Intake openings shall be located on the opposite side of the vault from exhaust openings allowing air to flow longitudinally over the transformer and out of the vault.

430.7.2.2 Mechanical circulation. Positive or negative pressure ventilation systems shall supply a minimum of 1.6 cfm (.76 L/s) of air per kVA of transformer capacity. The fans shall be installed outside of the vault and shall be controlled by a thermostat located inside the vault.

The intake vents shall be located in the lower one half of the perimeter walls of the vault. When the vault is located in a public garage or loading dock, any lower intake openings must be at least 18 inches above the garage floor level and at least 18 inches above the vault floor.

The exhaust vents shall be in the roof or ceiling of the vault. Vents are allowed to be installed in a wall if the top of the vent is not less than 12 inches below the vault ceiling. The top of the outlet on the exterior of the building shall be at least as high as the top of the outlet from the vault.

The ventilation system shall cause air to flow longitudinally across the transformers. The vault ventilation system shall be controlled independently from the rest of the building ventilation.

For *utility transformer vaults*, mechanical ventilation systems shall be designed by the applicant. The capacity and location of the ventilation system shall be *approved* by the Superintendent of Seattle City Light.

430.7.2.3 Temperature control. A remote temperature controller shall be installed in *utility transformer vaults* that have mechanical ventilation systems. The controller shall activate the fan when the temperature in the vault exceeds 70°F (21°C), and shall turn the fan off when the temperature reaches 140°F (60°C).

A visible or audible alarm shall be installed outside each *utility transformer vault* that will be activated if the fan does not operate when the temperature controller calls for ventilation, or if the fan becomes inoperable. A sign shall be mounted near the alarm stating CALL SEATTLE CITY LIGHT WHEN ALARM SOUNDS or CALL SEATTLE CITY LIGHT WHEN LIGHT IS ON.

430.7.3 Ventilation openings and duct terminations. Ventilation openings and duct terminations shall comply with *International Mechanical Code* Section 501.3.1 item 7, unless otherwise *approved* by the *building official*.

430.7.3.1 Location of exhaust ventilation openings and exhaust duct terminations. Exhaust ventilation openings and duct terminations shall be located not less than 10 feet (3048 mm) from fire escapes, required means of egress at the exterior of the building, elements of the exit discharge, combustible exterior wall coverings, openings that are not protected in accordance with Section 705.8, operable openings and property lines other than a public way and above finished walking surfaces. Exhaust outlets shall be located on the exterior of the building.

Interpretation I430.7: For purposes of this section, "property line" includes any property line separating one lot from another lot, but does not include any property line separating a lot from a public street or alley right-of-way. The separation distance may be measured to the opposite side of public streets and alleys.

430.7.3.2 Covering. Ventilation openings shall be covered with durable metal gratings, screens or louvers. If operable intake louvers are provided on mechanically ventilated transformer vaults, the louvers shall be controlled by the fan thermostat, i.e. the louvers shall be opened when the fan is energized.

430.7.3.3 Opening protection. Intake ventilation openings in the vault walls on the interior and exterior of the building shall be protected by automatic closing fire dampers having a fire-protection rating at least equal to that required for the vault. The actuating device on the fire damper shall be made to function at a temperature of 165°F (74°C).

430.7.3.4 Ventilation ducts. Exhaust ventilation ducts, if used, shall be enclosed in construction having a fire-resistance rating at least equal to that required for the vault. Exhaust ducts shall extend from the vault to the outside of the building. An exhaust duct for a mechanically ventilated vault shall be used exclusively for ventilating the vault. No fire dampers shall be installed in exhaust ventilation ducts.

430.8 Drainage for vaults.

430.8.1 General. Drains are prohibited in all transformer vaults.

430.8.2 Sumps. All transformer vaults containing oil-insulated transformers shall have a dry sump. All sumps shall have an opening of at least 6 inches (152 mm) diameter, a depth of at least 12 inches (305 mm), and shall be equipped with a removable steel grate that is flush with the floor. Sumps shall have at least an 8 gallon (30 liter) capacity. Sump capacity may be greater where required by the utility. The sump shall have a grouted bottom. The sump shall be located near, but not directly

DRAFT

behind, the personnel door and shall be out of the entry path for moving transformers in and out of the vault. The vault floor shall slope at least 1 inch in 10 feet (25 mm in 3048 mm) toward the sump.

430.9 Pipes and ducts in transformer vaults. No pipes or ducts foreign to the electrical installation shall enter or pass through any transformer vault. Electrical conduits terminating at transformer vaults shall be sealed with listed three-hour fire-protection rated firestop material. Electrical conduits terminating at transformer vaults shall be installed to avoid channeling water into the vault. Electrical conduits entering the vault floor shall be rigid galvanized steel and shall extend no less than 18 inches (457 mm) into the vault or to the top of the containment sill, whichever is greater.

430.10 Storage in transformer vaults. No material shall be stored in any transformer vault.

430.11 Sprinkler systems. Sprinkler systems shall not be installed within a transformer vault. The vault must be maintained in a dry condition at all times.

DRAFT

CHAPTER 5

GENERAL BUILDING HEIGHTS AND AREAS

User note:

About this chapter: *Chapter 5 establishes the limits to which a building can be built. Building height, number of stories and building area are specified in this chapter. Chapter 5 must be used in conjunction with the occupancies established in Chapter 3 and the types of construction established in Chapter 6. This chapter also specifies the impact that mezzanines, accessory occupancies and mixed occupancies have on the overall size of a building.*

SECTION 501
GENERAL

501.1 Scope. The provisions of this chapter control the height and area of structures hereafter erected and *additions* to existing structures.

SECTION 502
BUILDING ADDRESS

[S][F] 502.1 Address identification. New and existing buildings shall be provided with *approved* address identification. The address identification shall be legible and placed in a position that is visible from the street or road fronting the property. Address identification characters shall contrast with their background. Address numbers shall be Arabic numbers or alphabetical letters. Numbers shall not be spelled out. Each character shall be a minimum of 4 inches (102 mm) high with a minimum stroke width of 1/2 inch (12.7 mm). Where required by the fire code official, address identification shall be provided in additional approved locations to facilitate emergency response. Where access is by means of a private road and the building address cannot be viewed from the public way, a monument, pole or other approved sign or means shall be used to identify the structure. Address identification shall be maintained.

501.2.1 Enforcement by building official. The *building official* shall determine the address of any property in the City in accordance with the numbering system established in this Chapter.

Whenever the irregularity of plats, the changing direction of streets, avenues, or other highways, the interruption of the continuity of highways or any other condition causes doubt or difference of opinion as to the correct number of any piece of property or any building thereon, the number shall be determined by the *building official*. The *building official* shall be guided by the specific provisions of this chapter as far as they are applicable and when not applicable, by such rules as are established to carry out the intent of this chapter.

501.2.1.1 Owners to affix and maintain building numbers. The owner of any *building* or other structure shall maintain the street number of each *building* and structure in a conspicuous place over or near the principal street entrance or entrances, or in other conspicuous places as is necessary for the easy locating of such address.

Exception: Where there are multiple *buildings* on a site, the *building official* is permitted to waive the requirement for posting an address on appurtenant or accessory buildings where individual identification of each building is not essential.

Where a property has frontage along more than one named street, or for any other property, where there may be confusion regarding the address of a *building* or *structure*, the *building official* is permitted to require the complete address, including street number and street name to be conspicuously posted.

For *buildings* served by a private road or a common driveway, the address number(s) shall be posted at the head of the road or driveway in a manner that can be easily read from the intersecting street. Where the existing street grid may not adequately allow for the assignment of street addresses that will promote the easy locating of such addresses, or for any other reason consistent with the intent of this chapter, the *building official* is permitted to assign a name to the private road or common driveway that shall be used for addressing purposes. In addition, the *building official* is permitted to require one or more property owners along the road or driveway to post a sign displaying the assigned name at a location near the intersection of the road or driveway with a named public street.

If the *building official* finds that a *building*, structure or premises is not provided with numbers as herein required, or is not correctly numbered, the *building official* is permitted to notify the owner, agent or tenant of the correct street number and require that the number be properly placed, in accordance with the provisions of this chapter, within a reasonable length of time. It is a violation of this code for any *person* to fail to comply with such notice.

DRAFT

501.2.2 Numbering system prescribed. The numerical designation of all doorways and entrances to buildings and lots fronting upon the named right-of-ways of the City are established in accordance with the following system:

Except where otherwise specified, 100 numbers are allotted to each block, provided that where a named right-of-way intervenes between consecutively numbered right-of-ways, 50 numbers shall be allotted for each block. One whole number is allotted to each 20 feet (6096 mm) of frontage in each block; even numbers shall be used on the northerly side of named right-of-ways extending in an easterly and westerly direction and on the easterly side of named right-of-ways extending in a northerly and southerly direction. Odd numbers shall be used on the southerly side of named right-of-ways extending in an easterly and westerly direction and on the westerly side of named right-of-ways extending in a northerly and southerly direction.

In the case of irregular named right-of-ways, the frontages shall be numbered as near as may be according to the uniform series of block numbers with which they most nearly correspond.

501.2.3 Numbering of buildings

501.2.3.1 Numbering of buildings downtown. Between Yesler Way and Denny Way all frontages upon named right-of-ways extending in a northerly and southerly direction and lying west of Broadway, East Union Street, Minor Avenue and Melrose Avenue shall be numbered as follows:

Yesler Way to Fir Street number 100 and upwards, Fir Street to Spruce Street number 150 and upwards, Spruce Street to Alder Street number 200 and upwards, continuing by consecutive hundreds to Pine Street; Pine Street to Olive Way number 1600 and upwards, Olive Way to Howell Street number 1700 and upwards, Howell Street to Stewart Street number 1800 and upwards, Stewart Street to Virginia Street number 1900 and upwards, continuing by consecutive hundreds to Denny Way.

Between East Yesler Way and East Denny Way all frontages upon named right-of-ways extending in a northerly and southerly direction and lying east of Broadway, East Union Street, Minor Avenue and Melrose Avenue shall be numbered as follows:

East Yesler Way to East Fir Street number 100 and upwards, East Fir Street to East Spruce Street number 150 and upwards, East Spruce Street to East Alder Street number 200 and upwards, continuing by consecutive hundreds to East Marion Street; East Marion Street to East Spring Street number 900 and upwards, East Spring Street to East Union Street number 1100 and upwards, East Union Street to East Pike Street number 1400 and upwards, continuing by consecutive hundreds to East Denny Way.

Between East Yesler Way and East Denny Way all frontages upon named right-of-ways extending in an easterly and westerly direction and lying west of Broadway, East Union Street, Minor Avenue and Melrose Avenue shall be numbered as follows:

Southwesterly from Elliott Avenue, or Alaskan Way if south of Lenora Street, number 51 and downwards; Elliott Avenue (or Alaskan Way) to Western Avenue number 52 and upwards; Western Avenue to First Avenue number 76 and upwards; First Avenue to Second Avenue number 100 and upwards, continuing northeasterly to Broadway, East Union Street, Minor Avenue, or Melrose Avenue by consecutive hundreds.

Between East Yesler Way and East Denny Way all frontages upon named right-of-ways extending in an easterly and westerly direction and lying east of Broadway, East Union Street, Minor Avenue and Melrose Avenue shall be numbered as follows:

Melrose Avenue to Bellevue Avenue number 300 and upwards, Bellevue Avenue to Summit Avenue number 400 and upwards, continuing by consecutive hundreds to Broadway.

Broadway to Tenth Avenue number 900 and upwards, Tenth Avenue to Eleventh Avenue number 1000 and upwards, continuing by consecutive hundreds corresponding with the numbered series of avenues eastward to Lake Washington.

On East Olive Way eastward from Melrose Avenue, the street numbers shall run upwards consecutively, eastward from the existing street numbers that are west of the Melrose Avenue intersection.

501.2.3.2 Numbering of buildings south of downtown and east of the East Waterway. South of Yesler Way the frontages upon the named right-of-ways extending in a northerly and southerly direction shall be numbered as follows:

Yesler Way (or East Yesler Way) to South Washington Street number 100 and upwards, South Washington Street to South Main Street number 200 and upwards, South Main Street to South Jackson Street number 300 and upwards, South Jackson Street to South King Street number 400 and upwards, continuing by consecutive hundreds to South Barton Place, with blocks and streets on Rainier Avenue South being taken as the controlling series.

South of South Barton Place, 51st Avenue South shall be taken as the controlling series to the southern City limits.

On Second Avenue Extension South from Fourth Avenue South to Yesler Way, the frontages shall be numbered as follows:

DRAFT

From Fourth Avenue South to South Jackson Street number 100 and upwards, South Jackson Street to South Main Street number 200 and upwards, South Main Street to South Washington Street number 300 and upwards, South Washington Street to Yesler Way number 400 and upwards.

South of Yesler Way the frontages upon named right-of-ways extending in an easterly and westerly direction shall be numbered as follows:

Westward from First Avenue South to the Harbor Line or East Waterway number 99 and downwards, First Avenue South to Occidental Avenue South number 100 and upwards, Occidental Avenue South to Second Avenue South number 150 and upwards, Second Avenue South to Third Avenue South number 200 and upwards, continuing by consecutive hundreds to Sixth Avenue South; Sixth Avenue South to Maynard Avenue South number 600 and upwards, Maynard Avenue South to Seventh Avenue South number 650 and upwards, Seventh Avenue South to Eighth Avenue South (or Airport Way south of South Hinds Street) number 700 and upwards, Eighth Avenue South (or Airport Way south of South Hinds Street) to Airport Way South (or Ninth Avenue South of South Hinds Street) number 800 and upwards, Airport Way South (or Ninth Avenue South of South Hinds Street) to Interstate Highway 5 number 900 and upwards, continuing eastward by consecutive hundreds corresponding with the numbered series of avenues to Lake Washington.

501.2.3.3 Numbering of buildings between downtown and the Lake Washington Ship Canal. North of Denny Way, East Denny Way, and East Howell Street east of Madrona Drive the frontages upon the named right-of-ways extending in a northerly and southerly direction shall be numbered as follows:

Denny Way (and East or West Denny Way) to John Street (and East or West John Street) number 100 and upwards, continuing by consecutive hundreds, the blocks and streets on Queen Anne Avenue North being taken as a controlling series for numbering purposes west of Fairview Avenue North (or Fairview Avenue East) and south of Bertona Street (or West Bertona Street); 36th Avenue West being taken as the controlling series for numbering purposes west of Fairview Ave North (or Fairview Ave East) and north of Bertona Street (or West Bertona Street); Tenth Avenue East being taken as the controlling series for numbering purposes east of Fairview Avenue North (or Fairview Avenue East).

Between Queen Anne Avenue North and Eastlake Avenue East (East Galer being the northeast boundary of this subsection) the frontages on the named right-of-ways extending in an easterly and westerly direction shall be numbered as follows:

Queen Anne Avenue North to First Avenue North number 1 and upwards, First Avenue North to Warren Avenue North number 100 and upwards, Warren Avenue North to Second Avenue North number 150 and upwards, Second Avenue North to Third Avenue North number 200 and upwards, continuing by consecutive hundreds corresponding to the numbered series of avenues with half hundreds in the case of Nob Hill, Taylor, Bigelow, Mayfair, and Dexter Avenues North, to Ninth Avenue North; Ninth Avenue North to Westlake Avenue North number 900 and upwards, Westlake Avenue North to Terry Avenue North number 950 and upwards, Terry Avenue North to Boren Avenue North number 1000 and upwards, Boren Avenue North to Fairview Avenue North number 1100 and upwards, Fairview Avenue North to Minor Avenue North number 1150 and upwards, Minor Avenue North to Pontius Avenue North number 1200 and upwards, Pontius Avenue North to Yale Avenue North number 1250 and upwards, Yale Avenue North to Eastlake Avenue East number 1300 and upwards.

East of Eastlake Avenue East (or Fairview Avenue East north of East Galer Street) and North of East Denny Way the frontages upon the named east-west right-of-ways extending in an easterly and westerly direction shall be numbered as follows:

Eastlake Avenue East to Melrose Avenue East number 200 and upwards continuing by consecutive hundreds eastward to Broadway East; Broadway East to Tenth Avenue East number 900 and upwards, Tenth Avenue East to Federal Avenue East number 1000 and upwards, Federal Avenue East to Eleventh Avenue East number 1050 and upwards, Eleventh Avenue East to Twelfth Avenue East number 1100 and upwards, continuing by consecutive hundreds eastward to Lake Washington.

West of Queen Anne Avenue North the frontages upon named east-west right-of-ways extending in an easterly and westerly direction shall be numbered westward as follows:

Queen Anne Avenue North to First Avenue West number 1 and upwards, First Avenue West to Second Avenue West number 100 and upwards, continuing by consecutive hundreds westward.

501.2.3.4 Numbering of buildings north of the Lake Washington Ship Canal. The plan for the numbering of frontages upon the various named right-of-ways in that portion of the City of Seattle lying north of the Lake Washington Ship Canal is established as follows:

The frontages upon the named right-of-ways extending in a northerly and southerly direction shall be numbered in accordance with the designations of the intersecting numbered streets as follows: northward from the State Harbor Line, number 2900 and upwards.

DRAFT

The frontages upon the named right-of-ways extending in an easterly and westerly direction shall be numbered as follows:

West from First Avenue Northwest, commencing with 100, and continuing west in correspondence with the numbers of the avenues to Puget Sound.

East from First Avenue Northwest, commencing with 100 and continuing as follows: East from Palatine Avenue North, 200 and upwards; from Greenwood Avenue North, 300 and upwards; from Phinney Avenue North, 400 and upwards; from Francis Avenue North, 450 and upwards; from Dayton Avenue North, 500 and upwards; from Evanston Avenue North, 600 and upwards; from Fremont Avenue North, 700 and upwards; from North Park Avenue North, 800 and upwards; from Linden Avenue North, 900 and upwards (800 and upwards south of North 65th Street); from Aurora Avenue North, 900 and upwards (1100 and upwards north of North 65th Street); from Winslow Place North, 950 and upwards; from Whitman Avenue North 1000 and upwards; from Albion Place North, 1050 and upwards; from Woodland Park Avenue North, 1100 and upwards; from Nesbit Avenue North, 1150 and upwards; from Midvale Avenue North, 1200 and upwards; from Lenora Place North, 1250 and upwards; from Stone Avenue North (Stone Way North south of North 46th Street), 1300 and upwards; from Interlake Avenue North, 1400 and upwards; from Ashworth Avenue North, l500 and upwards; from Carr Place North, 1550 and upwards; from Woodlawn Avenue North, 1600 and upwards, from Densmore Avenue North, 1700 and upwards; from Caroline Avenue North and Courtland Place North, 1750 and upwards; from Wallingford Avenue North, 1800 and upwards; from Burke Avenue North and Canfield Place North, 1900 and upwards; From Stroud Avenue North and Wayne Place North, 2000 and upwards; from Meridian Avenue North, 2100 and upwards; from Bagley Avenue North, 2200 and upwards; from Corliss Avenue North, 2300 and upwards; from Sunnyside Avenue North, 2400 and upwards; and from Eastern Avenue North, 2500 and upwards.

East from First Avenue Northeast, commencing with 100, and continuing east in correspondence with the numbered avenues to Lake Washington.

501.2.3.5 Numbering buildings on Harbor Island. The frontages upon named right-of-ways extending in a northerly and southerly direction shall be numbered as follows:

Southwest Massachusetts Street to Southwest Florida Street, number 1700 and upwards; Southwest Florida Street to Southwest Lander Street, number 2500 and upwards; Southwest Lander Street to Southwest Hanford Street, number 2700 and upwards; Southwest Hanford Street to Southwest Spokane Street, number 3200 and upwards.

The frontages upon named right-of-ways extending in an easterly and westerly direction shall be numbered as follows:

The East Waterway to 11th Avenue Southwest, number 900 and upwards; 11th Avenue Southwest to 13th Avenue Southwest, number 1100 and upwards; 13th Avenue Southwest to 16th Avenue Southwest, number 1300 and upwards; 16th Avenue Southwest to the West Waterway, number 1600 and upwards.

501.2.3.6 Numbering buildings west of the West Waterway and the Duwamish Waterway. The frontages upon named right-of-ways extending in a northerly and southerly direction, shall be numbered as follows:

North of Southwest Andover Street, commencing with 3800 and continuing north to the Duwamish Head by consecutive hundreds, the blocks and streets on California Avenue Southwest being taken as the controlling series for numbering purposes.

South of Southwest Andover Street, commencing with 4000 and continuing south to Southwest Roxbury Street by consecutive hundreds, the blocks and streets of California Avenue Southwest being taken as the controlling series for numbering purposes.

South of Southwest Roxbury Street, commencing with 9600 and continuing south to the south City limits by consecutive hundreds, in correspondence with the numbers of the intersecting streets.

The frontages upon named right-of-ways extending in an easterly and westerly direction, shall be numbered as follows:

West of California Avenue Southwest, commencing with 4300 and continuing westward in correspondence with the numbers of the intersecting avenues to Puget Sound.

East of California Avenue Southwest, commencing with 4200 and continuing eastward in correspondence with the numbers of the intersecting avenues to the Duwamish Waterway.

DRAFT

SECTION 503
GENERAL BUILDING HEIGHT AND AREA LIMITATIONS

503.1 General. Unless otherwise specifically modified in Chapter 4 and this chapter, *building height,* number of *stories* and *building area* shall not exceed the limits specified in Sections 504 and 506 based on the type of construction as determined by Section 602 and the occupancies as determined by Section 302 except as modified hereafter. *Building height,* number of *stories* and *building* area provisions shall be applied independently. For the purposes of determining area limitations, height limitations

and type of construction, each portion of a building separated by one or more *fire walls* complying with Section 706 shall be considered to be a separate building.

Interpretation I503a: An uncovered occupied roof shall not be considered a *story* for the purpose of determining the number of *stories* in a *building.*

503.1.1 Special industrial occupancies. Buildings and structures designed to house special industrial processes that require large areas and unusual *building heights* to accommodate craneways or special machinery and equipment, including, among others, rolling mills; structural metal fabrication shops and foundries; or the production and distribution of electric, gas or steam power, shall be exempt from the *building height*, number of *stories* and *building area* limitations specified in Sections 504 and 506.

503.1.2 Buildings on same lot. Two or more buildings on the same lot shall be regulated as separate buildings or shall be considered as portions of one building where the *building height*, number of *stories* of each building and the aggregate *building area* of the buildings are within the limitations specified in Sections 504 and 506. The provisions of this code applicable to the aggregate building shall be applicable to each *building*.

503.1.3 Type I construction. Buildings of Type I construction permitted to be of unlimited tabular *building heights and areas* are not subject to the special requirements that allow unlimited area buildings in Section 507 or unlimited *building height* in Sections 503.1.1 and 504.3 or increased *building heights and areas* for other types of construction.

[W] 503.1.4 Occupied roofs. A roof level or portion thereof shall be permitted to be used as an occupied roof provided the occupancy of the roof is an occupancy that is permitted by Table 504.4 for the story immediately below the roof. The area of the occupied roofs shall not be included in the building area as regulated by Section 506.

Exceptions:

1. The occupancy located on an occupied roof shall not be limited to the occupancies allowed on the *story* immediately below the roof where the building is equipped throughout with an *automatic sprinkler system* in accordance with Section 903.3.1.1 or 903.3.1.2 and occupant notification in accordance with Section 907.5 is provided in the area of the occupied roof. Emergency voice/alarm communication system notification per Section 907.5.2.2 shall also be provided in the area of the occupied roof where such system is required elsewhere in the building.
2. Assembly occupancies shall be permitted on roofs of open parking garages of Type I or Type II construction, in accordance with the exception to Section 903.2.1.6.

503.1.4.1 Enclosures over occupied roof areas. Elements or structures enclosing the occupied roof areas shall not extend more than 48 inches (1220 mm) above the surface of the occupied roof.

Exception: Penthouses constructed in accordance with Section 1510.2 and towers, domes, spires and cupolas constructed in accordance with Section 1510.5.

DRAFT

SECTION 504
BUILDING HEIGHT AND NUMBER OF STORIES

504.1 General. The height, in feet, and the number of *stories* of a building shall be determined based on the type of construction, occupancy classification and whether there is an *automatic sprinkler system* installed throughout the building.

Exception: The *building height* of one-*story* aircraft hangars, aircraft paint hangars and buildings used for the manufacturing of aircraft shall not be limited where the building is provided with an *automatic sprinkler system* or *automatic fire-extinguishing system* in accordance with Chapter 9 and is entirely surrounded by *public ways* or *yards* not less in width than one and one-half times the *building height*.

504.1.1 Unlimited area buildings. The height of unlimited area buildings shall be designed in accordance with Section 507.

504.1.2 Special provisions. The special provisions of Section 510 permit the use of special conditions that are exempt from, or modify, the specific requirements of this chapter regarding the allowable heights of buildings based on the occupancy classification and type of construction, provided the special condition complies with the provisions specified in Section 510.

504.2 Mixed occupancy. In a building containing mixed occupancies in accordance with Section 508, no individual occupancy shall exceed the height and number of *story* limits specified in this section for the applicable occupancies.

504.3 Height in feet. The maximum height, in feet, of a building shall not exceed the limits specified in Table 504.3.

Exception: Towers, spires, steeples and other rooftop structures shall be constructed of materials consistent with the required type of construction of the building except where other construction is permitted by Section 1510.2.4. Such structures shall not be used for habitation or storage. The structures shall be unlimited in height where of noncombustible materials and shall not extend more than 20 feet (6096 mm) above the allowable building height where of combustible materials (see Chapter 15 for additional requirements).

[W][S] TABLE 504.3[i]
ALLOWABLE BUILDING HEIGHT IN FEET ABOVE GRADE PLANE[a]

OCCUPANCY CLASSIFICATION	TYPE OF CONSTRUCTION													
	SEE FOOTNOTES	TYPE I		TYPE II		TYPE III		TYPE IV				TYPE V	
		A	B	A	B	A	B	A	B	C	HT	A	B
A, B, E, F, M, S, U	NS[b]	UL	160	65	55	65	55	65	65	65	65	50	40
	S	UL	180	85	75	85	75	270	180	85	85	70	60
H-1, H-2, H-3, H-5	NS[c, d]	UL	160	65	55	65	55	120	90	65	65	50	40
	S												
H-4	NS[c, d]	UL	160	65	55	65	55	65	65	65	65	50	40
	S	UL	180	85	75	85	75	140	100	85	85	70	60
I-1 Condition 1, I-3	NS[d, e]	UL	160	65	55	65	55	65	65	65	65	50	40
	S	UL	180	85	75	85	75	180	120	85	85	70	60
I-1 Condition 2, I-2	NS[d, e, f]	UL	160	65	55	65	55	65	65	65	65	50	40
	S[i]	UL	180	85									
I-4	NS[d, g]	UL	160	65	55	65	55	65	65	65	65	50	40
	S	UL	180	85	75	85	75	270	180	85	85	70	60
R[h]	NS[d]	UL	160	65	55	65	55	65	65	65	65	50	40
	S13D	60	60	60	60	60	60	60	60	60	60	50	40
	S13R	60	60	60	60	60	60	60	60	60	60	60	60
	S	UL	180	85	75	85	75	270	180	85	85	70	60

For SI: 1 foot = 304.8 mm.

UL = Unlimited; NS = Buildings not equipped throughout with an automatic sprinkler system; S = Buildings equipped throughout with an automatic sprinkler system installed in accordance with Section 903.3.1.1; S13R = Buildings equipped throughout with an automatic sprinkler system installed in accordance with Section 903.3.1.2; S13D = Buildings equipped throughout with an automatic sprinkler system installed in accordance with Section 903.3.1.3.

a. See Chapters 4 and 5 for specific exceptions to the allowable height in this chapter.
b. See Section 903.2 for the minimum thresholds for protection by an automatic sprinkler system for specific occupancies.
c. New Group H occupancies are required to be protected by an automatic sprinkler system in accordance with Section 903.2.5.
d. The NS value is only for use in evaluation of existing building height in accordance with the *International Existing Building Code*.
e. New Group I-1 and I-3 occupancies are required to be protected by an automatic sprinkler system in accordance with Section 903.2.6. For new Group I-1 occupancies Condition 1, see Exception 1 of Section 903.2.6.
f. New and existing Group I-2 occupancies are required to be protected by an automatic sprinkler system in accordance with Section 903.2.6 and Section 1103.5 of the *International Fire Code*.
g. For new Group I-4 occupancies, see Exceptions 2 and 3 of Section 903.2.6.
h. New Group R occupancies are required to be protected by an automatic sprinkler system in accordance with Section 903.2.8.
i. I-1, Condition 2 Assisted living facilities licensed per chapter 388-78A WAC and residential treatment facilities as licensed by Washington State under chapter 246-337 WAC shall be permitted to use the allowable height above grade plane for R-2 occupancies.
j. A maximum of 12 inches of insulation may be added to the roof of an *existing building* without such additional height contributing to the *building height*.

DRAFT

504.4 Number of stories. The maximum number of *stories* of a building shall not exceed the limits specified in Table 504.4.

[W] TABLE 504.4
ALLOWABLE NUMBER OF STORIES ABOVE GRADE PLANE[a, b]

OCCUPANCY CLASSIFICATION	TYPE OF CONSTRUCTION												
	SEE FOOTNOTES	TYPE I		TYPE II		TYPE III		TYPE IV				TYPE V	
		A	B	A	B	A	B	A	B	C	HT	A	B
A-1	NS	UL	5	3	2	3	2	3	3	3	3	2	1
	S	UL	6	4	3	4	3	9	6	4	4	3	2
A-2	NS	UL	11	3	2	3	2	3	3	3	3	2	1
	S	UL	12	4	3	4	3	18	12	6	4	3	2
A-3	NS	UL	11	3	2	3	2	3	3	3	3	2	1
	S	UL	12	4	3	4	3	18	12	6	4	3	2
A-4	NS	UL	11	3	2	3	2	3	3	3	3	2	1
	S	UL	12	4	3	4	3	18	12	6	4	3	2
A-5	NS	UL	UL	UL	UL	UL	UL	1	1	1	UL	UL	UL
	S	UL	UL	UL	UL	UL	UL	UL	UL	UL	UL	UL	UL
B	NS	UL	11	5	3	5	3	5	5	5	5	3	2
	S	UL	12	6	4	6	4	18	12	9	6	4	3
E	NS	UL	5	3	2	3	2	3	3	3	3	1	1
	S	UL	6	4	3	4	3	9	6	4	4	2	2
F-1	NS	UL	11	4	2	3	2	3	3	3	4	2	1
	S	UL	12	5	3	4	3	10	7	5	5	3	2
F-2	NS	UL	11	5	3	4	3	5	5	5	5	3	2
	S	UL	12	6	4	5	4	12	8	6	6	4	3
H-1	NS[c, d]	1	1	1	1	1	1	NP	NP	NP	1	1	NP
	S							1	1	1			
H-2	NS[c, d]	UL	3	2	1	2	1	1	1	1	2	1	1
	S							2	2	2			
H-3	NS[c, d]	UL	6	4	2	4	2	3	3	3	4	2	1
	S							4	4	4			
H-4	NS[c, d]	UL	7	5	3	5	3	5	5	5	5	3	2
	S	UL	8	6	4	6	4	8	7	6	6	4	3
H-5	NS[c, d]	4	4	3	3	3	3	2	2	2	3	3	2
	S							3	3	3			
I-1 Condition 1	NS[d, e]	UL	9	4	3	4	3	4	4	4	4	3	2
	S	UL	10	5	4	5	4	10	7	5	5	4	3
I-1 Condition 2	NS[d, e]	UL	9	4	3	4	3	3	3	3	4	3	2
	S[i]	UL	10	5				10	6	4			
I-2	NS[d, f]	UL	4	2	1	1	NP	NP	NP	NP	1	1	NP
	S	UL	5	3				7	5	1			
I-3	NS[d, e]	UL	4	2	1	2	1	2	2	2	2	2	1
	S	UL	5	3	2	3	2	7	5	3	3	3	2
I-4	NS[d, g]	UL	5	3	2	3	2	3	3	3	3	1	1
	S	UL	6	4	3	4	3	9	6	4	4	2	2
M	NS	UL	11	4	2	4	2	4	4	4	4	3	1
	S	UL	12	5	3	5	3	12	8	6	5	4	2

DRAFT

[W] TABLE 504.4—continued
ALLOWABLE NUMBER OF STORIES ABOVE GRADE PLANE[a, b]

OCCUPANCY CLASSIFICATION	TYPE OF CONSTRUCTION													
	SEE FOOTNOTES	TYPE I		TYPE II		TYPE III		TYPE IV				TYPE V	
		A	B	A	B	A	B	A	B	C	HT	A	B
R-1[h]	NS[d]	UL	11	4	4	4	4	4	4	4	4	3	2
	S13R	4	4									4	3
	S	UL	12	5	5	5	5	18	12	8	5	4	3
R-2[h]	NS[d]	UL	11	4	4	4	4	4	4	4	4	3	2
	S13R	4	4	4								4	3
	S	UL	12	5	5	5	5	18	12	8	5	4	3
R-3[h]	NS[d]	UL	11	4	4	4	4	4	4	4	4	((~~3~~)) 4	3
	S13D	4	4									3	3
	S13R	4	4									((~~4~~)) 5	4
	S	UL	12	5	5	5	5	18	12	5	5	4	4
((~~R-4[h]~~	~~NS[d]~~	~~UL~~	~~11~~	~~4~~	~~4~~	~~4~~	~~4~~				~~4~~	~~3~~	~~2~~
	~~S13D~~	~~4~~	~~4~~									~~3~~	~~2~~
	~~S13R~~	~~4~~	~~4~~									~~4~~	~~3~~
	~~S~~	~~UL~~	~~12~~	~~5~~	~~5~~	~~5~~	~~5~~				~~5~~	~~4~~	~~3~~))
S-1	NS	UL	11	4	2	3	2	4	4	4	4	3	1
	S	UL	12	5	3	4	3	10	7	5	5	4	2
S-2	NS	UL	11	5	3	4	3	4	4	4	4	4	2
	S	UL	12	6	4	5	4	12	8	5	5	5	3
U	NS	UL	5	4	2	3	2	4	4	4	4	2	1
	S	UL	6	5	3	4	3	9	6	5	5	3	2

UL = Unlimited; NP = Not Permitted; NS = Buildings not equipped throughout with an automatic sprinkler system; S = Buildings equipped throughout with an automatic sprinkler system installed in accordance with Section 903.3.1.1; S13R = Buildings equipped throughout with an automatic sprinkler system installed in accordance with Section 903.3.1.2; S13D = Buildings equipped throughout with an automatic sprinkler system installed in accordance with Section 903.3.1.3.

a. See Chapters 4 and 5 for specific exceptions to the allowable height in this chapter.
b. See Section 903.2 for the minimum thresholds for protection by an automatic sprinkler system for specific occupancies.
c. New Group H occupancies are required to be protected by an automatic sprinkler system in accordance with Section 903.2.5.
d. The NS value is only for use in evaluation of existing building height in accordance with the *International Existing Building Code*.
e. New Group I-1 and I-3 occupancies are required to be protected by an automatic sprinkler system in accordance with Section 903.2.6. For new Group I-1 occupancies, Condition 1, see Exception 1 of Section 903.2.6.
f. New and existing Group I-2 occupancies are required to be protected by an automatic sprinkler system in accordance with Section 903.2.6 and 1103.5 of the *International Fire Code*.
g. For new Group I-4 occupancies, see Exceptions 2 and 3 of Section 903.2.6.
h. New Group R occupancies are required to be protected by an automatic sprinkler system in accordance with Section 903.2.8.
i. Group I-1, Condition 2. Assisted living facilities licensed per chapter 388-78A WAC and residential treatment facilities as licensed by Washington State under chapter 246-337 WAC shall be permitted to use the allowable height above grade plane for R-2 occupancies.

DRAFT

SECTION 505
MEZZANINES AND EQUIPMENT PLATFORMS

505.1 General. *Mezzanines* shall comply with Section 505.2. *Equipment platforms* shall comply with Section 505.3.

Interpretation I505.1: *Mezzanines* within individual *dwelling units* shall not be located above other *dwelling units* or common space other than corridors.

505.2 Mezzanines. A *mezzanine* or *mezzanines* in compliance with Section 505.2 shall be considered a portion of the *story* below. Such *mezzanines* shall not contribute to either the *building area* or number of *stories* as regulated by Section 503.1. The area of the *mezzanine* shall be included in determining the *fire area*. The clear height above and below the *mezzanine* floor construction shall be not less than 7 feet (2134 mm).

[S] 505.2.1 Area limitation. The aggregate area of a *mezzanine* or *mezzanines* within a room shall be not greater than ((~~one-third~~)) one-half of the floor area of that room or space in which they are located. The enclosed portion of a room shall not be included in a determination of the floor area of the room in which the *mezzanine* is located. In determining the allowable *mezzanine* area, the area of the *mezzanine* shall not be included in the floor area of the room.

((~~Exceptions~~)) Exception: ((~~1.~~)) The aggregate area of *mezzanines* in buildings and structures of Type I or II construction for special industrial occupancies in accordance with Section 503.1.1 shall be not greater than two-thirds of the floor area of the room.

((~~2. The aggregate area of *mezzanines* in buildings and structures of Type I or II construction shall be not greater than one-half of the floor area of the room in buildings and structures equipped throughout with an *approved automatic sprinkler system* in accordance with Section 903.3.1.1 and an *approved emergency voice/alarm communication system* in accordance with Section 907.5.2.2.~~

~~3. The aggregate area of a *mezzanine* within a *dwelling unit* that is located in a building equipped throughout with an *approved automatic sprinkler system* in accordance with Section 903.3.1.1 or 903.3.1.2 shall not be greater than one-half of the floor area of the room, provided that:~~

~~3.1. Except for enclosed closets and bathrooms, the *mezzanine* shall be open to the room in which such mezzanine is located;~~

~~3.2. The opening to the room shall be unobstructed except for walls not more than 42 inches (1067 mm) in height, columns and posts; and~~

~~3.3. Exceptions to Section 505.2.3 shall not be permitted.~~))

Interpretation I505.2: Only the following unenclosed areas of the room or space containing the *mezzanine* shall be used for purposes of calculating the allowable *mezzanine* floor area:

1. Areas with a ceiling height of at least 7 feet located directly below the mezzanine, except that no additional area benefit shall be gained for stacked *mezzanines;* and
2. Areas where the ceiling has a slope of less than 2:12 and with a ceiling height of at least 14 feet plus the thickness of the *mezzanine* floor construction; and
3. Areas where the ceiling has a slope of 2:12 or more and has a ceiling height of at least 12 feet plus the thickness of the *mezzanine* floor construction, provided that the *mezzanine* complies with Section 1208.2, exception 2.

Within a *dwelling unit*, enclosed or unenclosed portions of the entire floor level containing the *mezzanine* that meet requirements of this interpretation for the room area may be used for purposes of calculating the allowable *mezzanine* floor area.

DRAFT

505.2.1.1 Aggregate area of mezzanines and equipment platforms. Where a room contains both a *mezzanine* and an *equipment platform*, the aggregate area of the two raised floor levels shall be not greater than two-thirds of the floor area of that room or space in which they are located. The area of the *mezzanine* shall not exceed the area determined in accordance with Section 505.2.1.

505.2.2 Means of egress. The *means of egress* for *mezzanines* shall comply with the applicable provisions of Chapter 10.

505.2.3 Openness. A *mezzanine* shall be open and unobstructed to the room in which such *mezzanine* is located except for walls not more than 42 inches (1067 mm) in height, columns and posts.

Exceptions:

1. *Mezzanines* or portions thereof are not required to be open to the room in which the *mezzanines* are located, provided that the *occupant load* of the aggregate area of the enclosed space is not greater than 10.
2. A *mezzanine* having two or more exits or access to exits is not required to be open to the room in which the *mezzanine* is located.
3. *Mezzanines* or portions thereof are not required to be open to the room in which the *mezzanines* are located, provided that the aggregate floor area of the enclosed space is not greater than 10 percent of the allowable *mezzanine* area.
4. In industrial facilities, *mezzanines* used for control equipment are permitted to be glazed on all sides.
5. In occupancies other than Groups H and I, which are no more than two *stories* above *grade plane* and equipped throughout with an *automatic sprinkler system* in accordance with Section 903.3.1.1, a *mezzanine* having two or more *exits* or *access to exits* shall not be required to be open to the room in which the *mezzanine* is located.

[S] 505.2.4 Construction. *Mezzanines* and building elements supporting only the mezzanine shall comply with the fire-resistance ratings for floor construction in Table 601.

[S] 505.3 Equipment platforms. ((~~*Equipment platforms* in buildings shall not be considered as a portion of the floor below. Such *equipment platforms* shall not contribute to either the *building area* or the number of *stories* as regulated by Section 503.1.~~

~~The area of the *equipment platform* shall not be included in determining the *fire area* in accordance with Section 903. *Equipment platforms* shall not be a part of any *mezzanine* and such platforms and the walkways, *stairways, alternating tread devices* and ladders providing access to an *equipment platform* shall not serve as a part of the *means of egress* from the building.~~)) Equipment platforms and building elements supporting only the platform shall be built of materials permitted for the type of construction of the building. *Equipment platforms* in building shall not:

1. Be considered as a portion of the floor below.
2. Contribute to either the *building area* or the number of *stories* as regulated by Section 503.1.
3. Be included in determining the *fire area* in accordance with Section 903.
4. Be a part of any *mezzanine*.
5. Serve as a part of the *means of egress* from the building, including the walkways, *stairs*, *alternating tread devices* and ladders providing access to an equipment platform.

[S] 505.3.1 Area limitation. The aggregate area of all *equipment platforms* within a room shall be not greater than two-thirds of the area of the room in which they are located. Where an *equipment platform* is located in the same room as a *mezzanine*, the area of the *mezzanine* shall be determined by Section 505.2.1 and the combined aggregate area of the *equipment platforms* and *mezzanines* shall be not greater than two-thirds of the room in which they are located. The area of the *mezzanine* shall not exceed the area determined in accordance with Section 505.2.1. The area of the *mezzanine* shall not exceed the area determined according to Section 505.2.1.

505.3.2 Automatic sprinkler system. Where located in a building that is required to be protected by an *automatic sprinkler system*, *equipment platforms* shall be fully protected by sprinklers above and below the platform, where required by the standards referenced in Section 903.3.

505.3.3 Guards. *Equipment platforms* shall have *guards* where required by Section 1015.2.

SECTION 506
BUILDING AREA

[S] 506.1 General. The allowable floor area of a building shall be determined based on the type of construction, occupancy classification, whether there is an *automatic sprinkler system* installed throughout the building and the amount of building frontage on public way or open space.

506.1.1 Unlimited area buildings. Unlimited area buildings shall be designed in accordance with Section 507.

506.1.2 Special provisions. The special provisions of Section 510 permit the use of special conditions that are exempt from, or modify, the specific requirements of this chapter regarding the allowable areas of buildings based on the occupancy classification and type of construction, provided the special condition complies with the provisions specified in Section 510.

506.1.3 Basements. Basements need not be included in the total allowable floor area of a building provided the total area of such basements does not exceed the area permitted for a one-story above grade plane building.

506.2 Allowable area determination. The allowable area of a building shall be determined in accordance with the applicable provisions of Sections 506.2.1 through 506.2.4 and Section 506.3.

506.2.1 Single-occupancy, one-story buildings. The allowable area of a single-occupancy building with no more than one *story above grade plane* shall be determined in accordance with Equation 5-1:

$$A_a = A_t + (NS \times I_f) \qquad \textbf{(Equation 5-1)}$$

where:

A_a = Allowable area (square feet).

A_t = Tabular allowable area factor (NS, S1, S13R or S13D value, as applicable) in accordance with Table 506.2.

NS = Tabular allowable area factor in accordance with Table 506.2 for nonsprinklered building (regardless of whether the building is sprinklered).

I_f = Area factor increase due to frontage (percent) as calculated in accordance with Section 506.3.

DRAFT

[W][S] TABLE 506.2
ALLOWABLE AREA FACTOR (A_t = NS, S1, S13R, S13D or SM, as applicable) IN SQUARE FEET[a, b]

OCCUPANCY CLASSIFICATION	SEE FOOTNOTES	TYPE OF CONSTRUCTION											
		TYPE I		TYPE II		TYPE III		TYPE IV				TYPE V	
		A	B	A	B	A	B	A	B	C	HT	A	B
A-1	NS	UL	UL	15,500	8,500	14,000	8,500	45,000	30,000	18,750	15,000	11,500	5,500
	S1	UL	UL	62,000	34,000	56,000	34,000	180,000	120,000	75,000	60,000	46,000	22,000
	SM	UL	UL	46,500	25,500	42,000	25,500	135,000	90,000	56,250	45,000	34,500	16,500
A-2	NS	UL	UL	15,500	9,500	14,000	9,500	45,000	30,000	18,750	15,000	11,500	6,000
	S1	UL	UL	62,000	38,000	56,000	38,000	180,000	120,000	75,000	60,000	46,000	24,000
	SM	UL	UL	46,500	28,500	42,000	28,500	135,000	90,000	56,250	45,000	34,500	18,000
A-3	NS	UL	UL	15,500	9,500	14,000	9,500	45,000	30,000	18,750	15,000	11,500	6,000
	S1	UL	UL	62,000	38,000	56,000	38,000	180,000	120,000	75,000	60,000	46,000	24,000
	SM	UL	UL	46,500	28,500	42,000	28,500	135,000	90,000	56,250	45,000	34,500	18,000
A-4	NS	UL	UL	15,500	9,500	14,000	9,500	45,000	30,000	18,750	15,000	11,500	6,000
	S1	UL	UL	62,000	38,000	56,000	38,000	180,000	120,000	75,000	60,000	46,000	24,000
	SM	UL	UL	46,500	28,500	42,000	28,500	135,000	90,000	56,250	45,000	34,500	18,000
A-5	NS	UL	UL	UL	UL	UL	UL	UL	UL	UL	UL	UL	UL
	S1												
	SM												
B	NS	UL	UL	37,500	23,000	28,500	19,000	108,000	72,000	45,000	36,000	18,000	9,000
	S1	UL	UL	150,000	92,000	114,000	76,000	432,000	288,000	180,000	144,000	72,000	36,000
	SM	UL	UL	112,500	69,000	85,500	57,000	324,000	216,000	135,000	108,000	54,000	27,000
E	NS	UL	UL	26,500	14,500	23,500	14,500	76,500	51,000	31,875	25,500	18,500	9,500
	S1	UL	UL	106,000	58,000	94,000	58,000	306,000	204,000	127,500	102,000	74,000	38,000
	SM	UL	UL	79,500	43,500	70,500	43,500	229,500	153,000	95,625	76,500	55,500	28,500
F-1	NS	UL	UL	25,000	15,500	19,000	12,000	100,500	67,000	41,875	33,500	14,000	8,500
	S1	UL	UL	100,000	62,000	76,000	48,000	402,000	268,000	167,500	134,000	56,000	34,000
	SM	UL	UL	75,000	46,500	57,000	36,000	301,500	201,000	125,625	100,500	42,000	25,500
F-2	NS	UL	UL	37,500	23,000	28,500	18,000	151,500	101,000	63,125	50,500	21,000	13,000
	S1	UL	UL	150,000	92,000	114,000	72,000	606,000	404,000	252,500	202,000	84,000	52,000
	SM	UL	UL	112,500	69,000	85,500	54,000	454,500	303,000	189,375	151,500	63,000	39,000
H-1	NS[c]	21,000	16,500	11,000	7,000	9,500	7,000	10,500	10,500	10,000	10,500	7,500	NP
	S1												
H-2	NS[c]	21,000	16,500	11,000	7,000	9,500	7,000	10,500	10,500	10,000	10,500	7,500	3,000
	S1												
	SM												
H-3	NS[c]	UL	60,000	26,500	14,000	17,500	13,000	25,500	25,500	25,500	25,500	10,000	5,000
	S1												
	SM												
H-4	NS[c, d]	UL	UL	37,500	17,500	28,500	17,500	72,000	54,000	40,500	36,000	18,000	6,500
	S1	UL	UL	150,000	70,000	114,000	70,000	288,000	216,000	162,000	144,000	72,000	26,000
	SM	UL	UL	112,500	52,500	85,500	52,500	216,000	162,000	121,500	108,000	54,000	19,500
H-5	NS[c, d]	UL	UL	37,500	23,000	28,500	19,000	72,000	54,000	40,500	36,000	18,000	9,000
	S1	UL	UL	150,000	92,000	114,000	76,000	288,000	216,000	162,000	144,000	72,000	36,000
	SM	UL	UL	112,500	69,000	85,500	57,000	216,000	162,000	121,500	108000	54,000	27,000

DRAFT

[W][S] TABLE 506.2—continued
ALLOWABLE AREA FACTOR (A_t = NS, S1, S13R, S13D or SM, as applicable) IN SQUARE FEET[a, b]

OCCUPANCY CLASSIFICATION	SEE FOOTNOTES	TYPE OF CONSTRUCTION											
		TYPE I		TYPE II		TYPE III		TYPE IV				TYPE V	
		A	B	A	B	A	B	A	B	C	HT	A	B
I-1	NS[d, e]	UL	55,000	19,000	10,000	16,500	10,000	54,000	36,000	18,000	18,000	10,500	4,500
	S1	UL	220,000	76,000	40,000	66,000	40,000	216,000	144,000	72,000	72,000	42,000	18,000
	SM	UL	165,000	57,000	30,000	49,500	30,000	162,000	108,000	54,000	54,000	31,500	13,500
I-2	NS[d, f]	UL	UL	15,000	11,000	12,000	NP	36,000	24,000	12,000	12,000	9,500	NP
	S1	UL	UL	60,000	44,000	48,000	NP	144,000	96,000	48,000	48,000	38,000	NP
	SM	UL	UL	45,000	33,000	36,000	NP	108,000	72,000	36,000	36,000	28,500	NP
I-3	NS[d, e]	UL	UL	15,000	10,000	10,500	7,500	36,000	24,000	12,000	12,000	7,500	5,000
	S1	UL	UL	45,000	40,000	42,000	30,000	144,000	96,000	48,000	48,000	30,000	20,000
	SM	UL	UL	45,000	30,000	31,500	22,500	108,000	72,000	36,000	36,000	22,500	15,000
I-4	NS[d, g]	UL	60,500	26,500	13,000	23,500	13,000	76,500	51,000	25,500	25,500	18,500	9,000
	S1	UL	121,000	106,000	52,000	94,000	52,000	306,000	204,000	102,000	102,000	74,000	36,000
	SM	UL	181,500	79,500	39,000	70,500	39,000	229,500	153,000	76,500	76,500	55,500	27,000
M	NS	UL	UL	21,500	12,500	18,500	12,500	61,500	41,000	25,625	20,500	14,000	9,000
	S1	UL	UL	86,000	50,000	74,000	50,000	246,000	164,000	102,500	82,000	56,000	36,000
	SM	UL	UL	64,500	37,500	55,500	37,500	184,500	123,000	76,875	61,500	42,000	27,000
R-1[h]	NS[d]	UL	UL	24,000	16,000	24,000	16,000	61,500	41,000	25,625	20,500	12,000	7,000
	S13R												
	S1	UL	UL	96,000	64,000	96,000	64,000	246,000	164,000	102,500	82,000	48,000	28,000
	SM	UL	UL	72,000	48,000	72,000	48,000	184,500	123,000	76,875	61,500	36,000	21,000
R-2[h]	NS[d]	UL	UL	24,000	16,000	24,000	16,000	61,500	41,000	25,625	20,500	12,000	7,000
	S13R												
	S1	UL	UL	96,000	64,000	96,000	64,000	246,000	164,000	102,500	82,000	48,000	28,000
	SM	UL	UL	72,000	48,000	72,000	48,000	184,500	120,000	76,875	61,500	36,000	21,000
R-3[h]	NS[d]	UL	UL	UL	UL	UL	UL	UL	UL	UL	UL	UL	UL
	S13D												
	S13R												
	S1												
	SM												
((~~R-4[h]~~	~~NS[d]~~	~~UL~~	~~UL~~	~~24,000~~	~~16,000~~	~~24,000~~	~~16,000~~				~~20,500~~	~~12,000~~	~~7,000~~
	~~S13D~~												
	~~S13R~~												
	~~S1~~	~~UL~~	~~UL~~	~~96,000~~	~~64,000~~	~~96,000~~	~~64,000~~				~~82,000~~	~~48,000~~	~~28,000~~
	~~SM~~	~~UL~~	~~UL~~	~~72,000~~	~~48,000~~	~~72,000~~	~~48,000~~				~~61,500~~	~~36,000~~	~~21,000~~))
S-1	NS	UL	48,000	26,000	17,500	26,000	17,500	76,500	51,000	31,875	25,500	14,000	9,000
	S1	UL	192,000	104,000	70,000	104,000	70,000	306,000	204,000	127,500	102,000	56,000	36,000
	SM	UL	144,000	78,000	52,500	78,000	52,500	229,500	153,000	95,625	76,500	42,000	27,000
S-2	NS	UL	79,000	39,000	26,000	39,000	26,000	115,500	77,000	48,125	38,500	21,000	13,500
	S1	UL	316,000	156,000	104,000	156,000	104,000	462,000	308,000	192,500	154,000	84,000	54,000
	SM	UL	237,000	117,000	78,000	117,000	78,000	346,500	231,000	144,375	115,500	63,000	40,500
U	NS[i]	UL	35,500	19,000	8,500	14,000	8,500	54,000	36,000	22,500	18,000	9,000	5,500
	S1	UL	142,000	76,000	34,000	56,000	34,000	216,000	144,000	90,000	72,000	36,000	22,000
	SM	UL	106,500	57,000	25,500	42,000	25,500	162,000	108,000	67,500	54,000	27,000	16,500

DRAFT

For SI: 1 square foot = 0.0929 m^2.

UL = Unlimited; NP = Not Permitted; NS = Buildings not equipped throughout with an automatic sprinkler system; S1 = Buildings a maximum of one story above grade plane equipped throughout with an automatic sprinkler system installed in accordance with Section 903.3.1.1; SM = Buildings two or more stories above grade plane equipped throughout with an automatic sprinkler system installed in accordance with Section 903.3.1.1; S13R = Buildings equipped throughout with an automatic sprinkler system installed in accordance with Section 903.3.1.2; S13D = Buildings equipped throughout with an automatic sprinkler system installed in accordance with Section 903.3.1.3.

a. See Chapters 4 and 5 for specific exceptions to the allowable height in this chapter.
b. See Section 903.2 for the minimum thresholds for protection by an automatic sprinkler system for specific occupancies.
c. New Group H occupancies are required to be protected by an automatic sprinkler system in accordance with Section 903.2.5.
d. The NS value is only for use in evaluation of existing building area in accordance with the *International Existing Building Code*.
e. New Group I-1 and I-3 occupancies are required to be protected by an automatic sprinkler system in accordance with Section 903.2.6. For new Group I-1 occupancies, Condition 1, see Exception 1 of Section 903.2.6.
f. New and existing Group I-2 occupancies are required to be protected by an automatic sprinkler system in accordance with Section 903.2.6 and Section 1103.5 of the *International Fire Code*.
g. New Group I-4 occupancies see Exceptions 2 and 3 of Section 903.2.6.
h. New Group R occupancies are required to be protected by an automatic sprinkler system in accordance with Section 903.2.8.
i. The maximum allowable area for a single-story nonsprinklered Group U greenhouse is permitted to be 9,000 square feet, or the allowable area shall be permitted to comply with Table C102.1 of Appendix C.

506.2.2 Mixed-occupancy, one-story buildings. The allowable area of a mixed-occupancy building with no more than one *story above grade plane* shall be determined in accordance with the applicable provisions of Section 508.1 based on Equation 5-1 for each applicable occupancy.

506.2.2.1 Group H-2 or H-3 mixed occupancies. For a building containing Group H-2 or H-3 occupancies, the allowable area shall be determined in accordance with Section 508.4.2, with the sprinkler system increase applicable only to the portions of the building not classified as Group H-2 or H-3.

506.2.3 Single-occupancy, multistory buildings. The allowable area of a single-occupancy building with more than one *story above grade plane* shall be determined in accordance with Equation 5-2:

$A_a = [A_t + (NS \times I_f)] \times S_a$ **(Equation 5-2)**

where:

A_a = Allowable area (square feet).

A_t = Tabular allowable area factor (NS, S13R, S13D or SM value, as applicable) in accordance with Table 506.2.

NS = Tabular allowable area factor in accordance with Table 506.2 for a nonsprinklered building (regardless of whether the building is sprinklered).

I_f = Area factor increase due to frontage (percent) as calculated in accordance with Section 506.3.

S_a = Actual number of building *stories* above grade plane, not to exceed three. For buildings equipped throughout with an *automatic sprinkler system* installed in accordance with Section 903.3.1.2, use the actual number of building *stories above grade plane*, not to exceed four.

No individual story shall exceed the allowable area (A_a) as determined by Equation 5-2 using the value of $S_a = 1$.

Note: NFPA 13R sprinkler systems are limited to buildings of Group R up to and including four *stories* in height. See Section 903.3.1.2.

506.2.4 Mixed-occupancy, multistory buildings. Each story of a mixed-occupancy building with more than one *story above grade plane* shall individually comply with the applicable requirements of Section 508.1. For buildings with more than three *stories above grade plane*, the total building area shall be such that the aggregate sum of the ratios of the actual area of each *story* divided by the allowable area of such stories, determined in accordance with Equation 5-3 based on the applicable provisions of Section 508.1, shall not exceed three.

$A_a = [A_t + (NS \times I_f)]$ **(Equation 5-3)**

where:

A_a = Allowable area (square feet).

A_t = Tabular allowable area factor (NS, S13R, S13D or SM value, as applicable) in accordance with Table 506.2.

NS = Tabular allowable area factor in accordance with Table 506.2 for a nonsprinklered building (regardless of whether the building is sprinklered).

I_f = Area factor increase due to frontage (percent) as calculated in accordance with Section 506.3.

Exception: For buildings designed as separated occupancies under Section 508.4 and equipped throughout with an *automatic sprinkler system* installed in accordance with Section 903.3.1.2, the total building area shall be such that the aggre-

DRAFT

SECTION 508
MIXED USE AND OCCUPANCY

[S] 508.1 General. Each portion of a building shall be individually classified in accordance with Section 302.1. Where a building contains more than one occupancy group, the building or portion thereof shall comply with the applicable provisions of Section 508.2, 508.3 or 508.4, or a combination of these sections.

Exceptions:

1. Occupancies separated in accordance with Section 510.
2. Where required by Table 415.6.2, areas of Group H-1, H-2 and H-3 occupancies shall be located in a *detached building* or structure.
3. Uses within *live/work units*, complying with Section 419, are not considered separate occupancies.
4. Offices, mercantile, food preparation establishments for off-site consumption, personal care salons or similar uses in Group R *dwelling units*, which are conducted primarily by the occupants of a *dwelling unit* and are secondary to the use of the unit for dwelling purposes, and which do not exceed 500 square feet (46.4 m^2) are not considered a separate occupancy.

[S] 508.2 Accessory occupancies. Accessory occupancies are those occupancies that are ancillary to the main occupancy of the building or portion thereof. Accessory occupancies shall comply with the provisions of Sections 508.2.1 through 508.2.4.

508.2.1 Occupancy classification. Accessory occupancies shall be individually classified in accordance with Section 302.1. The requirements of this code shall apply to each portion of the building based on the occupancy classification of that space.

508.2.2 Allowable building height. The allowable height and number of *stories* of the building containing accessory occupancies shall be in accordance with Section 504 for the main occupancy of the building.

508.2.3 Allowable building area. The allowable area of the building shall be based on the applicable provisions of Section 506 for the main occupancy of the building. Aggregate accessory occupancies shall not occupy more than 10 percent of the floor area of the story in which they are located and shall not exceed the tabular values for nonsprinklered buildings in Table 506.2 for each such accessory occupancy.

508.2.4 Separation of accessory occupancies. No separation is required between accessory occupancies and the main occupancy.

Exceptions:

1. Group H-2, H-3, H-4 and H-5 occupancies shall be separated from all other occupancies in accordance with Section 508.4.
2. Group I-1, R-1, R-2 and R-3 *dwelling units* and *sleeping units* shall be separated from other *dwelling* or *sleeping units* and from accessory occupancies contiguous to them in accordance with the requirements of Section 420.

508.3 Nonseparated occupancies. Buildings or portions of buildings that comply with the provisions of this section shall be considered as nonseparated occupancies.

508.3.1 Occupancy classification. Nonseparated occupancies shall be individually classified in accordance with Section 302.1. The requirements of this code shall apply to each portion of the building based on the occupancy classification of that space. In addition, the most restrictive provisions of Chapter 9 that apply to the nonseparated occupancies shall apply to the total nonseparated occupancy area.

508.3.1.1 High-rise buildings. Where nonseparated occupancies occur in a *high-rise building*, the most restrictive requirements of Section 403 that apply to the nonseparated occupancies shall apply throughout the *high-rise building.*

508.3.1.2 Group I-2, Condition 2 occupancies. Where one of the nonseparated occupancies is Group I-2, Condition 2, the most restrictive requirements of Sections 407, 509 and 712 shall apply throughout the fire area containing the Group I-2 occupancy. The most restrictive requirements of Chapter 10 shall apply to the path of egress from the Group I-2, Condition 2 occupancy up to and including the exit discharge.

508.3.2 Allowable building area, height and number of stories. The allowable *building area, height* and number of *stories* of the building or portion thereof shall be based on the most restrictive allowances for the occupancy groups under consideration for the type of construction of the building in accordance with Section 503.1.

508.3.3 Separation. No separation is required between nonseparated occupancies.

Exceptions:

1. Group H-2, H-3, H-4 and H-5 occupancies shall be separated from all other occupancies in accordance with Section 508.4.
2. Group I-1, R-1, R-2 and R-3 *dwelling units* and *sleeping units* shall be separated from other *dwelling* or *sleeping units* and from other occupancies contiguous to them in accordance with the requirements of Section 420.

DRAFT

[S] 508.4 Separated occupancies. Buildings or portions of buildings that comply with the provisions of this section shall be considered as separated occupancies.

Exceptions:

1. No separation is required between Group A-2 or A-3 and Groups B or M occupancies when both are protected by an *automatic sprinkler system.*
2. Subject to the approval of the *building official*, unprotected openings are permitted in separations between parking areas and enclosed portions of buildings such as entry lobbies and similar areas provided:
   - 2.1. The floors of the enclosed *building* with unprotected openings are protected by an *automatic sprinkler system*;
   - 2.2. The openings are glazed with either tempered or laminated glazing materials;
   - 2.3. When required by the *building official*, the glazing is protected on the parking side with a sprinkler system designed to wet the entire glazed surface; and
   - 2.4. The parking areas are used primarily for passenger loading and unloading and vehicle drive-through uses.

508.4.1 Occupancy classification. Separated occupancies shall be individually classified in accordance with Section 302.1. Each separated space shall comply with this code based on the occupancy classification of that portion of the building. The most restrictive provisions of Chapter 9 that apply to the separate occupancies shall apply to the total nonfire-barrier-separated occupancy areas. Occupancy separations that serve to define fire area limits established in Chapter 9 for requiring a fire protection system shall also comply with Section 901.7.

508.4.2 Allowable building area. In each *story*, the *building area* shall be such that the sum of the ratios of the actual *building area* of each separated occupancy divided by the allowable *building* area of each separated occupancy shall not exceed 1.

508.4.3 Allowable building height and number of stories. Each separated occupancy shall comply with the *building height limitations* and *story* limitations based on the type of construction of the building in accordance with Section 503.1.

Exception: Special provisions of Section 510 shall permit occupancies at *building heights* and number of *stories* other than provided in Section 503.1.

508.4.4 Separation. Individual occupancies shall be separated from adjacent occupancies in accordance with Table 508.4.

[W] 508.4.4.1 Construction. Required separations shall be *fire barriers* constructed in accordance with Section 707 or *horizontal assemblies* constructed in accordance with Section 711, or both, so as to completely separate adjacent occupancies. Mass timber elements serving as fire barriers or horizontal assemblies to separate occupancies in Type IV-B or IV-C construction shall be separated from the interior of the building with an approved thermal barrier consisting of a minimum of 1/2 inch (12.7 mm) gypsum board or a material that is tested in accordance with and meets the acceptance criteria of both the Temperature Transmission Fire Test and the Integrity Fire Test of NFPA 275.

DRAFT

[S] TABLE 508.4
REQUIRED SEPARATION OF OCCUPANCIES (HOURS)[f]

OCCUPANCY	A, E		B[e]		I-1[a], I-3, I-4		I-2		R[a]		F-2, S-2[b], U		((~~B[e],~~)) F-1, ((~~M,~~)) S-1		M		H-1		H-2		H-3, H-4		H-5	
	S	NS	S	NS	S	NS	S	NS	S	NS	S	NS	S	NS	S	NS	S	NS	S	NS	S	NS	S	NS
A, E	N	N	1	2	1	2	2	NP	1	2	N	1	1	2	1	2	NP	NP	3	4	2	3	2	NP
B[e]	—	—	N	N	1	2	2	NP	1	2	N	N	1	2	N	N	NP	NP	2	3	1	2	1	NP
I-1[a], I-3, I-4	—	—	—	—	N	N	2	NP	1	NP	1	2	1	2	1	2	NP	NP	3	NP	2	NP	2	NP
I-2	—	—	—	—	—	—	N	N	2	NP	2	NP	2	NP	2	NP	NP	NP	3	NP	2	NP	2	NP
R[a]	—	—	—	—	—	—	—	—	N	N	1[c]	2[c]	1	2	1	2	NP	NP	3	NP	2	NP	2	NP
F-2, S-2[b], U	—	—	—	—	—	—	—	—	—	—	N	N	1	2	1	2	NP	NP	3	4	2	3	2	NP
((~~B[e],~~)) F-1, ((~~M,~~)) S-1	—	—	—	—	—	—	—	—	—	—	—	—	N	N	N	N	NP	NP	2	3	1	2	1	NP
M	—	—	—	—	—	—	—	—	—	—	—	—	—	—	N	N	NP	NP	2	3	1	2	1	NP
H-1	—	—	—	—	—	—	—	—	—	—	—	—	—	—	—	—	N	NP	NP	NP	NP	NP	NP	NP
H-2	—	—	—	—	—	—	—	—	—	—	—	—	—	—	—	—	—	—	N	NP	1	NP	1	NP
H-3, H-4	—	—	—	—	—	—	—	—	—	—	—	—	—	—	—	—	—	—	—	—	1[d]	NP	1	NP
H-5	—	—	—	—	—	—	—	—	—	—	—	—	—	—	—	—	—	—	—	—	—	—	N	NP

S = Buildings equipped throughout with an automatic sprinkler system installed in accordance with Section 903.3.1.1.
NS = Buildings not equipped throughout with an automatic sprinkler system installed in accordance with Section 903.3.1.1.
N = No separation requirement.
NP = Not Permitted.

[F] TABLE 509
INCIDENTAL USES

ROOM OR AREA	SEPARATION AND/OR PROTECTION
Furnace room where any piece of equipment is over 400,000 Btu per hour input	1 hour or provide automatic sprinkler system
Rooms with boilers where the largest piece of equipment is over 15 psi and 10 horsepower	1 hour or provide automatic sprinkler system
Refrigerant machinery room	1 hour or provide automatic sprinkler system
Hydrogen fuel gas rooms, not classified as Group H	1 hour in Group B, F, M, S and U occupancies; 2 hours in Group A, E, I and R occupancies.
Incinerator rooms	2 hours and provide automatic sprinkler system
Paint shops, not classified as Group H, located in occupancies other than Group F	2 hours; or 1 hour and provide automatic sprinkler system
In Group E occupancies, laboratories and vocational shops not classified as Group H	1 hour or provide automatic sprinkler system
In Group I-2 occupancies, laboratories not classified as Group H	1 hour and provide automatic sprinkler system
In ambulatory care facilities, laboratories not classified as Group H	1 hour or provide automatic sprinkler system
Laundry rooms over 100 square feet	1 hour or provide automatic sprinkler system
In Group I-2, laundry rooms over 100 square feet	1 hour
Group I-3 cells and Group I-2 patient rooms equipped with padded surfaces	1 hour
In Group I-2, physical plant maintenance shops	1 hour
In ambulatory care facilities or Group I-2 occupancies, waste and linen collection rooms with containers that have an aggregate volume of 10 cubic feet or greater	1 hour
In other than ambulatory care facilities and Group I-2 occupancies, waste and linen collection rooms over 100 square feet	1 hour or provide automatic sprinkler system
In ambulatory care facilities or Group I-2 occupancies, storage rooms greater than 100 square feet	1 hour
Stationary storage battery systems having an aggregate liquid electrolyte energy capacity greater than the threshold quantity specified in Table 1206.2 of the *International Fire Code*	1 hour in Group B, F, M, S and U occupancies; 2 hours in Group A, E, I and R occupancies.
Electrical installations and transformers	See Sections 110.26 through 110.34 and Sections 450.8 through 450.48 of NFPA 70 for protection and separation requirements.
[W] Dry type transformers over 112.5 kVA and required to be in a fire-resistance-rated room in accordance with Seattle Electrical Code Section 450.21 (B)[1]	1 hour or provide automatic sprinkler system
Elevator control and machine rooms	See Section 3020.4

For SI: 1 square foot = 0.0929 m^2, 1 pound per square inch (psi) = 6.9 kPa, 1 British thermal unit (Btu) per hour = 0.293 watts, 1 horsepower = 746 watts, 1 gallon = 3.785 L, 1 cubic foot = 0.0283 m^3.

[1] Dry type transformers rated over 35,000 volts and oil-insulated transformers shall be installed in a transformer vault complying with Section 428 and the Seattle Electrical Code.

509.2 Occupancy classification. Incidental uses shall not be individually classified in accordance with Section 302.1. Incidental uses shall be included in the building occupancies within which they are located.

DRAFT

[S] 509.3 Area limitations. Incidental uses shall not occupy more than 10 percent of the *building area* of the *story* in which they are located. Incidental uses that occupy more than 10 percent of the *building area* of the *story* in which they are located shall comply with either Table 509 or Section 508.4, whichever requires a greater separation.

509.4 Separation and protection. The incidental uses listed in Table 509 shall be separated from the remainder of the building or equipped with an *automatic sprinkler system*, or both, in accordance with the provisions of that table.

509.4.1 Separation. Where Table 509 specifies a fire-resistance-rated separation, the incidental uses shall be separated from the remainder of the *building* by a *fire barrier* constructed in accordance with Section 707 or a *horizontal assembly* constructed in accordance with Section 711, or both. Construction supporting 1-hour *fire barriers* or *horizontal assemblies* used for incidental use separations in buildings of Type IIB, IIIB and VB construction is not required to be fire-resistance rated unless required by other sections of this code.

[W] 509.4.1.1 Type IV-B and IV-C construction. Where Table 509 specifies a fire-resistance-rated separation, mass timber elements serving as fire barriers or a horizontal assembly in Type IV-B or IV-C construction shall be separated from the interior of the incidental use with an approved thermal barrier consisting of a minimum of 1/2 inch (12.7 mm) gypsum board or a material that is tested in accordance with and meets the acceptance criteria of both the Temperature Transmission Fire Test and the Integrity Fire Test of NFPA 275.

509.4.2 Protection. Where Table 509 permits an *automatic sprinkler system* without a *fire barrier*, the incidental uses shall be separated from the remainder of the building by construction capable of resisting the passage of smoke. The walls shall extend from the top of the foundation or floor assembly below to the underside of the ceiling that is a component of a fire-resistance-rated floor assembly or roof assembly above or to the underside of the floor or roof sheathing, deck or slab above. Doors shall be self- or automatic-closing upon detection of smoke in accordance with Section 716.2.6.6. Doors shall not have air transfer openings and shall not be undercut in excess of the clearance permitted in accordance with NFPA 80. Walls surrounding the incidental use shall not have air transfer openings unless provided with smoke dampers in accordance with Section 710.8.

509.4.2.1 Protection limitation. Where an *automatic sprinkler system* is provided in accordance with Table 509, only the space occupied by the incidental use need be equipped with such a system.

DRAFT

SECTION 510
SPECIAL PROVISIONS

510.1 General. The provisions in Sections 510.2 through ((~~510.9~~)) 510.10 shall permit the use of special conditions that are exempt from, or modify, the specific requirements of this chapter regarding the allowable *building heights and areas* of buildings based on the occupancy classification and type of construction, provided the special condition complies with the provisions specified in this section for such condition and other applicable requirements of this code. The provisions of Sections 510.2 through ((~~510.8~~)) 510.7 are to be considered independent and separate from each other.

Interpretation I510: Sections 510.2 through 510.8 are not permitted to be used in combination with each other. Sections 510.8 through 510.10 are permitted to be used in combination with Section 510.2.

[W][S] 510.2 Horizontal building separation allowance. A building shall be considered as separate and distinct buildings for the purpose of determining area limitations, continuity of *fire walls*, limitation of number of *stories* and type of construction where all of the following conditions are met:

1. The buildings are separated with a *horizontal assembly* having a *fire-resistance rating* of not less than 3 hours. Where vertical offsets are provided as part of a horizontal assembly, the vertical offset and the structure supporting the vertical offset shall have a *fire-resistance rating* of not less than 3 hours.
2. The building below, including the *horizontal assembly*, is of Type IA construction.
3. *Shaft*, *stairway*, *ramp* and escalator enclosures through the *horizontal assembly* shall have not less than a 2-hour *fire-resistance rating* with opening protectives in accordance with Section 716.

   Exception: Where the enclosure walls below the *horizontal assembly* have not less than a 3-hour *fire-resistance rating* with opening protectives in accordance with Section 716, the enclosure walls extending above the *horizontal assembly* shall be permitted to have a 1-hour *fire-resistance rating*, provided:

   1. The building above the *horizontal assembly* is not required to be of Type I construction;
   2. The enclosure connects fewer than four *stories*; and
   3. The enclosure opening protectives above the *horizontal assembly* have a *fire protection rating* of not less than 1 hour.

4. Interior exit stairways located within the Type IA building are permitted to be of combustible materials where both of the following requirements are met:
   4.1. The building above the Type IA building is of Type III, IV, or V construction.
   4.2. The stairway located in the Type IA building is enclosed by 3-hour *fire-resistance-rated* construction with opening protectives in accordance with Section 716.

((~~4~~)) 5. The building or buildings above the *horizontal assembly* shall be permitted to have ((~~multiple Group A occupancy uses, each with an *occupant load* of less 300, or Group B, M, R or S occupancies.~~)) any of the following occupancies:
   5.1. Multiple Group A occupancy uses, each with an occupant load of less 300;
   5.2. Group B;
   5.3. Group I-1, Condition 2 licensed care facilities and residential treatment facilities;
   5.4. Group M;
   5.5. Group R;
   5.6. Group S-2 parking garage used for the parking and storage of private motor vehicles; and
   5.7. Uses incidental to the operation or serving occupants of the *building* (including entry lobbies, mechanical rooms, storage areas and similar uses).

((~~5~~)) 6. The building below the *horizontal assembly* ((~~shall be protected throughout by an *approved automatic sprinkler system* in accordance with Section 903.3.1.1, and shall be~~)) is permitted to be any occupancy allowed by this code except Group H.

((~~6~~)) 7. The maximum *building height* in feet (mm) shall not exceed the limits set forth in Section 504.3 for the building having the smaller allowable height as measured from the *grade plane*.

8. All portions of the *buildings* above and below the three-hour *horizontal assembly* shall be protected throughout with an *automatic sprinkler system* that complies with Section 903.3.1.1.

9. Occupied floors shall be not more than 75 feet above the lowest level of fire department vehicle access.

Interpretation I510.2: For the purpose of this item, occupied roof decks are considered floors used for human occupancy if the occupant load of the deck is 10 or more on the roof of a building not equipped with an *automatic sprinkler system* or where the occupant load is 50 or more on the roof of a *building* that is equipped with an *automatic sprinkler system.*

10. Where the structure above the horizontal assembly is of Type V construction, and the structure or any portion of the structure is 7 *stories above grade plane* in height, all interior exit stairways shall be pressurized in accordance with Section 909.20.6 for low-rise stairways.

11. Where the structure above the horizontal assembly is not of Type V construction, interior exit stairways that connect more than 6 *stories* above the level of exit discharge for the stairway shall be pressurized in accordance with Section 909.20.6 for low-rise stairways.

510.3 Group S-2 enclosed parking garage with Group S-2 open parking garage above. A Group S-2 enclosed parking garage with not more than one *story* above *grade plane* and located below a Group S-2 *open parking garage* shall be classified as a separate and distinct building for the purpose of determining the type of construction where all of the following conditions are met:

1. The allowable area of the building shall be such that the sum of the ratios of the actual area divided by the allowable area for each separate occupancy shall not exceed 1.
2. The Group S-2 enclosed parking garage is of Type I or II construction and is at least equal to the *fire-resistance* requirements of the Group S-2 *open parking garage*.
3. The height and the number of tiers of the Group S-2 *open parking garage* shall be limited as specified in Table 406.5.4.
4. The floor assembly separating the Group S-2 enclosed parking garage and Group S-2 *open parking garage* shall be protected as required for the floor assembly of the Group S-2 enclosed parking garage. Openings between the Group S-2 enclosed parking garage and Group S-2 *open parking garage*, except *exit* openings, shall not be required to be protected.
5. The Group S-2 enclosed parking garage is used exclusively for the parking or storage of private motor vehicles, but shall be permitted to contain an office, waiting room and toilet room having a total area of not more than 1,000 square feet (93 m^2) and mechanical equipment rooms incidental to the operation of the building.

[S] 510.4 Parking beneath Group R. Where a maximum one *story above grade plane* Group S-2 parking garage, enclosed or open, or combination thereof, of Type I construction or open of Type IV construction, with grade entrance, is provided under a building of Group R, the number of *stories* to be used in determining the minimum type of construction shall be measured from the floor above such a parking area. The floor assembly between the parking garage and the Group R above shall comply with the type of construction required for the parking garage and shall also provide a *fire-resistance rating* not less than the mixed

DRAFT

occupancy separation required in Section 508.4. For purposes of this Section, the Group R occupancy shall be no more than four *stories* in height.

((~~**510.5 Group R-1 and R-2 buildings of Type IIIA construction.** The height limitation for buildings of Type IIIA construction in Groups R-1 and R-2 shall be increased to six *stories* and 75 feet (22 860 mm) where the first floor assembly above the *basement* has a *fire-resistance rating* of not less than 3 hours and the floor area is subdivided by 2-hour fire-resistance-rated *fire walls* into areas of not more than 3,000 square feet (279 m²).~~))

((~~**510.6**~~)) **510.5 Group R-1 and R-2 buildings of Type IIA construction.** The height limitation for buildings of Type IIA construction in Groups R-1 and R-2 shall be increased to nine *stories* and 100 feet (30 480 mm) where the building is separated by not less than 50 feet (15 240 mm) from any other building on the *lot* and from *lot lines*, the *exits* are segregated in an area enclosed by a 2-hour fire-resistance-rated *fire wall* and the first floor assembly has a *fire-resistance rating* of not less than 1-1/2 hours.

((~~**510.7**~~)) **510.6 Open parking garage beneath Groups A, I, B, M and R.** *Open parking garages* constructed under Groups A, I, B, M and R shall not exceed the height and area limitations permitted under Section 406.5. The height and area of the portion of the building above the *open parking garage* shall not exceed the limitations in Section 503 for the upper occupancy. The height, in both feet and *stories*, of the portion of the building above the *open parking garage* shall be measured from *grade plane* and shall include both the *open parking garage* and the portion of the building above the parking garage.

((~~**510.7.1**~~)) **510.6.1 Fire separation.** *Fire barriers* constructed in accordance with Section 707 or *horizontal assemblies* constructed in accordance with Section 711 between the parking occupancy and the upper occupancy shall correspond to the required *fire-resistance rating* prescribed in Table 508.4 for the uses involved. The type of construction shall apply to each occupancy individually, except that structural members, including main bracing within the open parking structure, which is necessary to support the upper occupancy, shall be protected with the more restrictive fire-resistance-rated assemblies of the groups involved as shown in Table 601. *Means of egress* for the upper occupancy shall conform to Chapter 10 and shall be separated from the parking occupancy by *fire barriers* having not less than a 2-hour *fire-resistance rating* as required by Section 707 with *self-closing* doors complying with Section 716 or *horizontal assemblies* having not less than a 2-hour *fire-resistance rating* as required by Section 711, with *self-closing* doors complying with Section 716. *Means of egress* from the *open parking garage* shall comply with Section 406.5.

((~~**510.8**~~)) **510.7 Group B or M buildings with Group S-2 open parking garage above.** Group B or M occupancies located below a Group S-2 open parking garage of a lesser type of construction shall be considered as a separate and distinct building from the Group S-2 *open parking garage* for the purpose of determining the type of construction where all of the following conditions are met:

1. The buildings are separated with a *horizontal assembly* having a *fire-resistance rating* of not less than 2 hours.
2. The occupancies in the building below the *horizontal assembly* are limited to Groups B and M.
3. The occupancy above the *horizontal assembly* is limited to a Group S-2 *open parking garage*.
4. The building below the *horizontal assembly* is of Type IA construction.

   Exception: The building below the *horizontal assembly* shall be permitted to be of Type IB or II construction, but not less than the type of construction required for the Group S-2 *open parking garage* above, where the building below is not greater than *one story* in height above grade plane.
5. The height and area of the building below the *horizontal assembly* does not exceed the limits set forth in Section 503.
6. The height and area of the Group S-2 *open parking garage* does not exceed the limits set forth in Section 406.5. The height, in both feet and *stories*, of the Group S-2 *open parking garage* shall be measured from *grade plane* and shall include the building below the *horizontal assembly*.
7. *Exits* serving the Group S-2 *open parking garage* discharge directly to a street or *public way* and are separated from the building below the *horizontal assembly* by 2-hour *fire barriers* constructed in accordance with Section 707 or 2-hour *horizontal assemblies* constructed in accordance with Section 711, or both.

((~~**510.9**~~)) **510.8 Multiple buildings above a horizontal assembly.** Where two or more buildings are provided above the *horizontal assembly* separating a Group S-2 parking garage or building below from the buildings above in accordance with the special provisions in Section 510.2, 510.3 or 510.8, the buildings above the *horizontal assembly* shall be regarded as separate and distinct buildings from each other and shall comply with all other provisions of this code as applicable to each separate and distinct building.

[W] ((~~510.5~~)) 510.9 Group R-1 and R-2 buildings of Type IIIA construction. ((~~The height limitation for~~)) For buildings of Type IIIA construction in Groups R-1 and R-2 the maximum allowable height in Table 504.3 shall be increased ((~~to six *stories*~~)) by 10 feet and ((~~75 feet (22 860 mm)~~)) the maximum allowable number of stories in Table 504.4 shall be increased by one where the first floor assembly above the *basement* has a *fire-resistance rating* of not less than 3 hours and the floor area is subdivided by 2-hour fire-resistance-rated *fire walls* into areas of not more than 3,000 square feet (279 m²).

DRAFT

510.10 Group R-2 buildings of Type IIIA construction. The height limitation for *buildings* of Type IIIA construction in Group R-2 shall be increased to six *stories* where all of the following conditions are met:

1. The first story of Type IIIA construction is separated from stories above with a *horizontal assembly* having a *fire-resistance rating* of not less than 2 hours.
2. All stories of Type IIIA construction greater than 6,000 gross square feet shall be subdivided into compartments, by 2-hour fire-resistance rated *fire walls*, with areas of not more than 12,000 gross square feet.
3. Each compartment shall have an enclosed *exit stairway*, and a standpipe in accordance with Section 905.
4. Unprotected vertical openings, including unenclosed *exit access stairways*, shall not penetrate floor/ceiling assemblies between stories of Type IIIA construction or between stories of Type IIIA and Type IA construction.
5. Mezzanines shall not be allowed in any story of the Type IIIA construction.
6. The maximum total design *dead load* shall be 50 psf for all roof areas above the sixth story of Type IIIA construction.

Note: The *dead load* shall be calculated as specified in Chapter 2 and Section 1607.12.3.1.

Note: The maximum total design *dead load* of 50 psf is permitted to be applied over the entire roof area above the sixth story of Type IIIA construction.

DRAFT

CHAPTER 6

TYPES OF CONSTRUCTION

User note:

About this chapter: *Chapter 6 establishes five types of construction in which each building must be categorized. This chapter looks at the materials used in the building (combustible or noncombustible) and the extent to which building elements such as building frame, roof, wall and floor can resist fire. Depending on the type of construction, the specific building element and its proximity to a lot line, fire resistance of 1 to 3 hours is specified.*

SECTION 601
GENERAL

601.1 Scope. The provisions of this chapter shall control the classification of buildings as to type of construction.

SECTION 602
CONSTRUCTION CLASSIFICATION

602.1 General. Buildings and structures erected or to be erected, altered or extended in height or area shall be classified in one of the five construction types defined in Sections 602.2 through 602.5. The building elements shall have a *fire-resistance rating* not less than that specified in Table 601 and exterior walls shall have a *fire-resistance rating* not less than that specified in Table 602. Where required to have a *fire-resistance rating* by Table 601, building elements shall comply with the applicable provisions of Section 703.2. The protection of openings, ducts and air transfer openings in building elements shall not be required unless required by other provisions of this code.

602.1.1 Minimum requirements. A building or portion thereof shall not be required to conform to the details of a type of construction higher than that type which meets the minimum requirements based on occupancy even though certain features of such a building actually conform to a higher type of construction.

DRAFT

[W] TABLE 601
FIRE-RESISTANCE RATING REQUIREMENTS FOR BUILDING ELEMENTS (HOURS)

BUILDING ELEMENT	TYPE I		TYPE II		TYPE III		TYPE IV				TYPE V	
	A	B	A	B	A	B	A	B	C	HT	A	B
Primary structural frame[f] (see Section 202)	3[a, b]	2[a, b]	1[b]	0	1[b]	0	3[a]	2[a]	2[a]	HT	1[b]	0
Bearing walls Exterior[e, f] Interior	 3 3[a]	 2 2[a]	 1 1	 0 0	 2 1	 2 0	 3 3	 2 2	 2 2	 2 1/HT	 1 1	 0 0
Nonbearing walls and partitions Exterior	See Table 602											
Nonbearing walls and partitions Interior[d]	0	0	0	0	0	0	0	0	0	See Section 2304.11.2	0	0
Floor construction and associated secondary members (see Section 202)	2[g]	2[g]	1	0	1	0	2	2	2	HT	1	0
Roof construction and associated secondary members (see Section 202)	1 1/2[b]	1[b,c]	1[b,c]	0[c]	1[b,c]	0	1 1/2	1	1	HT	1[b,c]	0

For SI: 1 foot = 304.8 mm.

a. Roof supports: Fire-resistance ratings of primary structural frame and bearing walls are permitted to be reduced by 1 hour where supporting a roof only.

b. Except in Group F-1, H, M and S-1 occupancies, fire protection of structural members in roof construction shall not be required, including protection of primary structural frame members, roof framing and decking where every part of the roof construction is 20 feet or more above any floor immediately below. Fire-retardant-treated wood members shall be allowed to be used for such unprotected members.

c. In all occupancies, heavy timber complying with Section 2304.11 shall be allowed where a 1-hour or less fire-resistance rating is required.

d. Not less than the fire-resistance rating required by other sections of this code.

e. Not less than the fire-resistance rating based on fire separation distance (see Table 602).

f. Not less than the fire-resistance rating as referenced in Section 704.10.

Note: See Sections 1019, 1023 and 603.1 item 27 for stairway construction.

g. The fire-resistance rating for mezzanines constructed in accordance with Section 505.2 need not exceed 1 hour.

[W] TABLE 602
FIRE-RESISTANCE RATING REQUIREMENTS FOR EXTERIOR WALLS BASED ON FIRE SEPARATION DISTANCE[a, d, g, j]

FIRE SEPARATION DISTANCE = X (feet)	TYPE OF CONSTRUCTION	OCCUPANCY GROUP H[e]	OCCUPANCY GROUP F-1, M, S-1[f]	OCCUPANCY GROUP A, B, E, F-2, I, R[i], S-2, U[h]
X < 5[b]	All	3	2	1
5 ≤ X < 10	IA, IVA, Others	3 2	2 1	1 1
10 ≤ X < 30	IA, IB, IVA, IVB, IIB, VB Others	2 1 1	1 0 1	1[c] 0 1[c]
X ≥ 30	All	0	0	0

For SI: 1 foot = 304.8 mm.

a. Load-bearing exterior walls shall also comply with the fire-resistance rating requirements of Table 601.
b. See Section 706.1.1 for party walls.
c. Open parking garages complying with Section 406 shall not be required to have a fire-resistance rating.
d. The fire-resistance rating of an exterior wall is determined based upon the fire separation distance of the exterior wall and the story in which the wall is located.
e. For special requirements for Group H occupancies, see Section 415.6.
f. For special requirements for Group S aircraft hangars, see Section 412.3.1.
g. Where Table 705.8 permits nonbearing exterior walls with unlimited area of unprotected openings, the required fire-resistance rating for the exterior walls is 0 hours.
h. For a building containing only a Group U occupancy private garage or carport, the exterior wall shall not be required to have a fire-resistance rating where the fire separation distance is 5 feet (1523 mm) or greater.
i. For a Group R-3 building of Type II-B or Type V-B construction, the exterior wall shall not be required to have a fire-resistance rating where the fire separation distance is 5 feet (1523 mm) or greater.
j. *Existing buildings* may encroach a maximum of 4 inches into the required *fire separation distance*, solely for the purpose of adding insulation to the building exterior.

602.2 Types I and II. Types I and II construction are those types of construction in which the building elements listed in Table 601 are of noncombustible materials, except as permitted in Section 603 and elsewhere in this code.

602.3 Type III. Type III construction is that type of construction in which the exterior walls are of noncombustible materials and the interior building elements are of any material permitted by this code. *Fire-retardant-treated wood* framing and sheathing complying with Section 2303.2 shall be permitted within *exterior wall* assemblies of a 2-hour rating or less.

Interpretation I602.3: Type IIIA buildings are permitted to include exposed heavy-timber construction for columns, beams, girders, arches, trusses, floors and roof decks except for fire-resistive construction required by Sections 510 and 713 and Chapter 10.

((~~**602.4 Type IV.** Type IV construction is that type of construction in which the exterior walls are of noncombustible materials and the interior building elements are of solid wood, laminated wood, heavy timber (HT) or structural composite lumber (SCL) without concealed spaces. The minimum dimensions for permitted materials including solid timber, glued laminated timber, structural composite lumber (SCL), and cross-laminated timber and details of Type IV construction shall comply with the provisions of this section and Section 2304.11. Exterior walls complying with Section 602.4.1 or 602.4.2 shall be permitted. Interior walls and partitions not less than 1-hour fire-resistance rating or heavy timber complying with Section 2304.11.2.2 shall be permitted.~~)) *

[W] 602.4 Type IV. Type IV construction is that type of construction in which the building elements are mass timber or noncombustible materials and have fire-resistance ratings in accordance with Table 601. Mass timber elements shall meet the fire-resistance rating requirements of this section based on either the fire-resistance rating of the noncombustible protection, the mass timber, or a combination of both and shall be determined in accordance with Section 703.2 or 703.3. The minimum dimensions and permitted materials for building elements shall comply with the provisions of this section including Section 2304.11. Mass timber elements of Types IV-A, IV-B and IV-C construction shall be protected with noncombustible protection applied directly to the mass timber in accordance with Sections 602.4.1 through 602.4.3. The time assigned to the noncombustible protection shall be determined in accordance with Section 703.8 and comply with 722.7.

Cross-laminated timber shall be labeled as conforming to ANSI/APA PRG 320-18 as referenced in Section 2303.1.4.

Exterior load-bearing walls and non-load-bearing walls shall be mass timber construction or shall be of noncombustible construction.

EXCEPTION: Exterior load-bearing walls and non-load-bearing walls of Type IV-HT Construction in accordance with Section 602.4.4.

The interior building elements, including non-load-bearing walls and partitions, shall be of mass timber construction or of noncombustible construction.

EXCEPTION: Interior building elements and non-load-bearing walls and partitions of Type IV-HT Construction in accordance with Section 602.4.4.

DRAFT

Combustible concealed spaces are not permitted except as otherwise indicated in Sections 602.4.1 through 602.4.4. Combustible stud spaces within light frame walls of Type IV-HT construction shall not be considered concealed spaces, but shall comply with Section 718.

In buildings of Type IV-A, B, and C, construction with an occupied floor located more than 75 feet above the lowest level of fire department access, up to and including 12 stories or 180 feet above grade plane, mass timber interior exit and elevator hoistway enclosures shall be protected in accordance with Section 602.4.1.2. In buildings greater than 12 stories or 180 feet above grade plane, interior exit and elevator hoistway enclosures shall be constructed of noncombustible materials.

((~~**602.4.1 Fire-retardant-treated wood in exterior walls.** *Fire-retardant-treated wood* framing and sheathing complying with Section 2303.2 shall be permitted within exterior wall assemblies not less than 6 inches (152 mm) in thickness with a 2-hour rating or less.~~))

602.4.1 Type IV-A. Building elements in Type IV-A construction shall be protected in accordance with Sections 602.4.1.1 through 602.4.1.6. The required fire-resistance rating of noncombustible elements and protected mass timber elements shall be determined in accordance with Section 703.2 or Section 703.3.

602.4.1.1 Exterior protection. The outside face of exterior walls of mass timber construction shall be protected with noncombustible protection with a minimum assigned time of 40 minutes as determined in Section 722.7.1. All components of the exterior wall covering, shall be of noncombustible material except water resistive barriers having a peak heat release rate of less than 150 kW/m2, a total heat release of less than 20 MJ/m2 and an effective heat of combustion of less than 18 MJ/kg as determined in accordance with ASTM E1354 and having a flame spread index of 25 or less and a smoke-developed index of 450 or less as determined in accordance with ASTM E84 or UL 723. The ASTM E1354 test shall be conducted on specimens at the thickness intended for use, in the horizontal orientation and at an incident radiant heat flux of 50 kW/m2.

602.4.1.2 Interior protection. Interior faces of all mass timber elements, including the inside faces of exterior mass timber walls and mass timber roofs, shall be protected with materials complying with Section 703.5.

602.4.1.2.1 Protection time. Noncombustible protection shall contribute a time equal to or greater than times assigned in Table 722.7.1(1), but not less than 80 minutes. The use of materials and their respective protection contributions listed in Table 722.7.1(2), shall be permitted to be used for compliance with Section 722.7.1.

602.4.1.3 Floors. The floor assembly shall contain a noncombustible material not less than 1 inch in thickness above the mass timber. Floor finishes in accordance with Section 804 shall be permitted on top of the noncombustible material. The underside of floor assemblies shall be protected in accordance with 602.4.1.2.

602.4.1.4 Roofs. The interior surfaces of roof assemblies shall be protected in accordance with Section 602.4.1.2. Roof coverings in accordance with Chapter 15 shall be permitted on the outside surface of the roof assembly.

602.4.1.5 Concealed spaces. Concealed spaces shall not contain combustibles other than electrical, mechanical, fire protection, or plumbing materials and equipment permitted in plenums in accordance with Section 602 of the International Mechanical Code, and shall comply with all applicable provisions of Section 718. Combustible construction forming concealed spaces shall be protected in accordance with Section 602.4.1.2.

602.4.1.6 Shafts. Shafts shall be permitted in accordance with Sections 713 and 718. Both the shaft side and room side of mass timber elements shall be protected in accordance with Section 602.4.1.2.

((~~**602.4.2 Cross-laminated timber in exterior walls.** *Cross-laminated timber* complying with Section 2303.1.4 shall be permitted within exterior wall assemblies not less than 6 inches (152 mm) in thickness with a 2-hour rating or less, provided the exterior surface of the cross-laminated timber is protected by one the following:~~

~~1. *Fire-retardant-treated wood* sheathing complying with Section 2303.2 and not less than 15/32 inch (12 mm) thick;~~

~~2. *Gypsum board* not less than 1/2 inch (12.7 mm) thick; or~~

~~3. A noncombustible material.~~))

602.4.2 Type IV-B. Building elements in Type IV-B construction shall be protected in accordance with Sections 602.4.2.1 through 602.4.2.6. The required fire-resistance rating of noncombustible elements or mass timber elements shall be determined in accordance with Section 703.2 or 703.3.

602.4.2.1 Exterior protection. The outside face of exterior walls of mass timber construction shall be protected with noncombustible protection with a minimum assigned time of 40 minutes as determined in Section 722.7.1. All components of the exterior wall covering shall be of noncombustible material except water resistive barriers having a peak heat release rate of less than 150 kW/m2, a total heat release of less than 20 MJ/m2 and an effective heat of combustion of less than 18 MJ/kg as determined in accordance with ASTM E1354, and having a flame spread index of 25 or less and a smoke-developed index of 450 or less as determined in accordance with ASTM E84 or UL 723. The ASTM E1354 test shall be conducted on specimens at the thickness intended for use, in the horizontal orientation and at an incident radiant heat flux of 50 kW/m2.

DRAFT

602.4.2.2 Interior protection. Interior faces of all mass timber elements, including the inside face of exterior mass timber walls and mass timber roofs, shall be protected, as required by this section, with materials complying with Section 703.5.

602.4.2.2.1 Protection time. Noncombustible protection shall contribute a time equal to or greater than times assigned in Table 722.7.1(1), but not less than 80 minutes. The use of materials and their respective protection contributions listed in Table 722.7.1(2), shall be permitted to be used for compliance with Section 722.7.1.

602.4.2.2.2 Protected area. All interior faces of all mass timber elements shall be protected in accordance with Section 602.4.2.2.1, including the inside face of exterior mass timber walls and mass timber roofs.

EXCEPTION: Unprotected portions of mass timber ceilings and walls complying with Section 602.4.2.2.4 and the following:

1. Unprotected portions of mass timber ceilings, including attached beams, shall be permitted and shall be limited to an area equal to 20% of the floor area in any dwelling unit or fire area; or
2. Unprotected portions of mass timber walls, including attached columns, shall be permitted and shall be limited to an area equal to 40% of the floor area in any dwelling unit or fire area; or
3. Unprotected portions of both walls and ceilings of mass timber, including attached columns and beams, in any dwelling unit or fire area shall be permitted in accordance with Section 602.4.2.2.3.
4. Mass timber columns and beams which are not an integral portion of walls or ceilings, respectively, shall be permitted to be unprotected without restriction of either aggregate area or separation from one another.

602.4.2.2.3 Mixed unprotected areas. In each dwelling unit or fire area, where both portions of ceilings and portions of walls are unprotected, the total allowable unprotected area shall be determined in accordance with Equation 6-1.

(Equation 6-1)

$$(Utc/Uac) + (Utw/Uaw) \leq 1$$

where:

Utc = Total unprotected mass timber ceiling areas;

Uac = Allowable unprotected mass timber ceiling area conforming to Section 602.4.2.2.2, Exception 1;

Utw = Total unprotected mass timber wall areas;

Uaw = Allowable unprotected mass timber wall area conforming to Section 602.4.2.2.2, Exception 2.

602.4.2.2.4 Separation distance between unprotected mass timber elements. In each dwelling unit or fire area, unprotected portions of mass timber walls and ceilings shall be not less than 15 feet from unprotected portions of other walls and ceilings, measured horizontally along the ceiling and from other unprotected portions of walls measured horizontally along the floor.

602.4.2.3 Floors. The floor assembly shall contain a noncombustible material not less than 1 inch in thickness above the mass timber. Floor finishes in accordance with Section 804 shall be permitted on top of the noncombustible material. The underside of floor assemblies shall be protected in accordance with Section 602.4.1.2.

602.4.2.4 Roofs. The interior surfaces of roof assemblies shall be protected in accordance with Section 602.4.2.2 except, in nonoccupiable spaces, they shall be treated as a concealed space with no portion left unprotected. Roof coverings in accordance with Chapter 15 shall be permitted on the outside surface of the roof assembly.

602.4.2.5 Concealed spaces. Concealed spaces shall not contain combustibles other than electrical, mechanical, fire protection, or plumbing materials and equipment permitted in plenums in accordance with Section 602 of the *International Mechanical Code*, and shall comply with all applicable provisions of Section 718. Combustible construction forming concealed spaces shall be protected in accordance with Section 602.4.1.2.

602.4.2.6 Shafts. Shafts shall be permitted in accordance with Sections 713 and 718. Both the shaft side and room side of mass timber elements shall be protected in accordance with Section 602.4.1.2.

((~~**602.4.3 Exterior structural members.** Where a horizontal separation of 20 feet (6096 mm) or more is provided, wood columns and arches conforming to heavy timber sizes complying with Section 2304.11 shall be permitted to be used externally.~~)) *

602.4.3 Type IV-C. Building elements in Type IV-C construction shall be protected in accordance with Sections 602.4.3.1 through 602.4.3.6. The required fire-resistance rating of building elements shall be determined in accordance with Sections 703.2 or 703.3.

602.4.3.1 Exterior protection. The exterior side of walls of combustible construction shall be protected with noncombustible protection with a minimum assigned time of 40 minutes as determined in Section 722.7.1. All components of the exterior wall covering, shall be of noncombustible material except water resistive barriers having a peak heat release rate of less than 150 kW/m2, a total heat release of less than 20 MJ/m2 and an effective heat of combustion of less than 18 MJ/kg as determined in accordance with ASTM E1354 and having a flame spread index of 25 or less and a smoke-developed

DRAFT

index of 450 or less as determined in accordance with ASTM E84 or UL 723. The ASTM E1354 test shall be conducted on specimens at the thickness intended for use, in the horizontal orientation and at an incident radiant heat flux of 50 kW/m2.

602.4.3.2 Interior protection. Mass timber elements are permitted to be unprotected.

602.4.3.3 Floors. Floor finishes in accordance with Section 804 shall be permitted on top of the floor construction.

602.4.3.4 Roofs. Roof coverings in accordance with Chapter 15 shall be permitted on the outside surface of the roof assembly.

602.4.3.5 Concealed spaces. Concealed spaces shall not contain combustibles other than electrical, mechanical, fire protection, or plumbing materials and equipment permitted in plenums in accordance with Section 602 of the International Mechanical Code, and shall comply with all applicable provisions of Section 718. Combustible construction forming concealed spaces shall be protected with noncombustible protection with a minimum assigned time of 40 minutes as determined in Section 722.7.1.

602.4.3.6 Shafts. Shafts shall be permitted in accordance with Sections 713 and 718. Shafts and elevator hoistway and interior exit stairway enclosures shall be protected with noncombustible protection with a minimum assigned time of 40 minutes as determined in Section 722.7.1, on both the inside of the shaft and the outside of the shaft.

[W] 602.4.4 Type IV-HT. Type IV-HT construction (Heavy Timber, HT) is that type of construction in which the exterior walls are of noncombustible materials and the interior building elements are of solid wood, laminated heavy timber or structural composite lumber (SCL), without concealed spaces. The minimum dimensions for permitted materials including solid timber, glued-laminated timber, structural composite lumber (SCL) and cross-laminated timber (CLT) and details of Type IV construction shall comply with the provisions of this section and section 2304.11. Exterior walls complying with Section 602.4.4.1 or 602.4.4.2 shall be permitted. Interior walls and partitions not less than 1 hour fire-resistance rating or heavy timber conforming with Section 2304.11.2.2 shall be permitted.

602.4.4.1 Fire-retardant-treated wood in exterior walls. Fire-retardant- treated wood framing and sheathing complying with Section 2303.2 shall be permitted within exterior wall assemblies not less than 6 inches (152 mm) in thickness with a 2-hour rating or less.

602.4.4.2 Cross-laminated timber in exterior walls. Cross-laminated timber complying with Section 2303.1.4 shall be permitted within exterior wall assemblies not less than 6 inches (152 mm) in thickness with a 2-hour rating or less, provided the exterior surface of the cross laminated timber is protected by one of the following:

1. Fire-retardant-treated wood sheathing complying with Section 2303.2 and not less than 15/32 inch (12 mm) thick;
2. Gypsum board not less than 1/2 inch (12.7 mm) thick; or
3. A noncombustible material.

602.4.4.3 Exterior structural members. Where a horizontal separation of 20 feet (6096 mm) or more is provided, wood columns and arches conforming to heavy timber sizes complying with Section 2304.11 shall be permitted to be used externally.

602.5 Type V. Type V construction is that type of construction in which the structural elements, *exterior walls* and interior walls are of any materials permitted by this code.

Interpretation I602.5: Type VA buildings are permitted to include exposed heavy-timber construction for columns, beams, girders, arches, trusses, floors and roof decks except for fire-resistive construction required by Sections 510 and 713 and Chapter 10.

SECTION 603
COMBUSTIBLE MATERIAL IN TYPES I AND II CONSTRUCTION

[W][S] 603.1 Allowable materials. Combustible materials shall be permitted in buildings of Type I or II construction in the following applications and in accordance with Sections 603.1.1 through 603.1.3:

1. *Fire-retardant-treated wood* shall be permitted in:
   - 1.1. Nonbearing partitions where the required *fire-resistance rating* is 2 hours or less.
   - 1.2. Nonbearing *exterior walls* where fire-resistance-rated construction is not required.
   - 1.3. Roof construction, including girders, trusses, framing and decking.

     Exception: In buildings of Type IA construction exceeding two *stories above grade plane*, *fire-retardant-treated wood* is not permitted in roof construction where the vertical distance from the upper floor to the roof is less than 20 feet (6096 mm).
   - 1.4. Balconies, porches, decks and exterior stairways not used as required exits on buildings three stories or less above grade plane. Approved connector shall be per IBC 2304.10.5.

DRAFT

2. Thermal and acoustical insulation, other than foam plastics, having a *flame spread index* of not more than 25.

   Exceptions:

   1. Insulation placed between two layers of noncombustible materials without an intervening airspace shall be allowed to have a *flame spread index* of not more than 100.
   2. Insulation installed between a finished floor and solid decking without intervening airspace shall be allowed to have a *flame spread index* of not more than 200.
3. Foam plastics in accordance with Chapter 26.
4. Roof coverings that have an A, B or C classification.
5. *Interior floor finish* and floor covering materials installed in accordance with Section 804.
6. Millwork such as doors, door frames, window sashes and frames.
7. *Interior wall and ceiling finishes* installed in accordance with Section 803.
8. *Trim* installed in accordance with Section 806.
9. Where not installed greater than 15 feet (4572 mm) above grade, show windows, nailing or furring strips and wooden bulkheads below show windows, including their frames, aprons and show cases.
10. Finish flooring installed in accordance with Section 805.
11. Partitions dividing portions of stores, offices or similar places occupied by one tenant only and that do not establish a *corridor* serving an *occupant load* of 30 or more shall be permitted to be constructed of *fire-retardant-treated wood*, 1-hour fire-resistance-rated construction or of wood panels or similar light construction up to 6 feet (1829 mm) in height.
12. Stages and platforms constructed in accordance with Sections 410.2 and 410.3, respectively.
13. Combustible *exterior wall coverings*, balconies and similar projections and bay or oriel windows in accordance with Chapter 14 and Section 705.2.3.1.
14. Blocking such as for handrails, millwork, cabinets and window and door frames.
15. Light-transmitting plastics as permitted by Chapter 26.
16. Mastics and caulking materials applied to provide flexible seals between components of *exterior wall* construction.
17. Exterior plastic veneer installed in accordance with Section 2605.2.
18. Nailing or furring strips as permitted by Section 803.15.
19. Heavy timber as permitted by Note c to Table 601 and Sections 602.4.3 and 705.2.3.1.
20. Aggregates, component materials and admixtures as permitted by Section 703.2.2.
21. Sprayed fire-resistant materials and intumescent and mastic fire-resistant coatings, determined on the basis of *fire resistance* tests in accordance with Section 703.2 and installed in accordance with Sections 1705.14 and 1705.15, respectively.
22. Materials used to protect penetrations in fire-resistance-rated assemblies in accordance with Section 714.
23. Materials used to protect joints in fire-resistance-rated assemblies in accordance with Section 715.
24. Materials allowed in the concealed spaces of buildings of Types I and II construction in accordance with Section 718.5.
25. Materials exposed within plenums complying with Section 602 of the *International Mechanical Code*.
26. Wall construction of freezers and coolers of less than 1,000 square feet (92.9 m^2), in size, lined on both sides with non-combustible materials and the building is protected throughout with an *automatic sprinkler system* in accordance with Section 903.3.1.1.
27. Stairways within individual *dwelling units* and stairways serving a single tenant space are permitted to be of fire-retardant-treated wood or heavy-timber construction. In other than Group R occupancies, such stairways shall not serve as a required means of egress.
28. Stairways complying with Section 510.2, item 4.
29. Aluminum is permitted as follows:
    - 29.1. Where combustible materials, including fire retardant treated wood, are allowed by the code;
    - 29.2. For structural members supporting less than 500 square feet that do not have direct connections to columns and bracing members designed to carry gravity loads;
    - 29.3. In curtain walls *approved* or listed for use in non-combustible construction; and
    - 29.4. Unprotected aluminum frames for *awnings* in accordance with Section 3105.5.

DRAFT

603.1.1 Ducts. The use of nonmetallic ducts shall be permitted where installed in accordance with the limitations of the *International Mechanical Code*.

603.1.2 Piping. The use of combustible piping materials shall be permitted where installed in accordance with the limitations of the *International Mechanical Code* and the ((~~*International*~~)) *Uniform Plumbing Code*.

603.1.3 Electrical. The use of electrical wiring methods with combustible insulation, tubing, raceways and related components shall be permitted where installed in accordance with the limitations of this code.

DRAFT

CHAPTER 7

FIRE AND SMOKE PROTECTION FEATURES

User note:

About this chapter: *Chapter 7 provides detailed requirements for fire-resistance-rated construction, including structural members, walls, partitions and horizontal assemblies. Other portions of the code describe where certain fire-resistance-rated elements are required. This chapter specifies how these elements are constructed, how openings in walls and partitions are protected and how penetrations of such elements are protected.*

SECTION 701
GENERAL

[S] 701.1 Scope. The provisions of this chapter shall govern the materials, systems and assemblies used for structural *fire resistance* and fire-resistance-rated construction separation of adjacent spaces to safeguard against the spread of fire and smoke within a building and the spread of fire to or from buildings.

Exceptions:

1. Carports are not required to comply with this chapter if they satisfy all the following criteria:
   - 1.1. Accessory to Group R-3 occupancies.
   - 1.2. Used to shelter only vehicles, trailers or vessels.
   - 1.3. Constructed of metal, plastic or fabric.
   - 1.4. No more than 3 pounds per square foot in total weight.
   - 1.5. No more than 300 square feet covered area.
2. Temporary tents and similar structures are not required to comply with this chapter if they satisfy all the following criteria:
   - 2.1 The occupant load is less than 100;
   - 2.2 The structure is fully or partially enclosed and 400 square feet or less in area; or is entirely unenclosed and 700 square feet or less in area;
   - 2.3 The structure is constructed of metal, plastic or fabric; and
   - 2.4 The structure is no more than 3 pounds per square foot in total weight.

DRAFT

SECTION 702
MULTIPLE USE FIRE ASSEMBLIES

702.1 Multiple use fire assemblies. Fire assemblies that serve multiple purposes in a building shall comply with all of the requirements that are applicable for each of the individual fire assemblies.

SECTION 703
FIRE-RESISTANCE RATINGS AND FIRE TESTS

703.1 Scope. Materials prescribed herein for *fire resistance* shall conform to the requirements of this chapter.

703.2 Fire-resistance ratings. The *fire-resistance rating* of building elements, components or assemblies shall be determined in accordance with the test procedures set forth in ASTM E119 or UL 263 or in accordance with Section 703.3. The *fire-resistance rating* of penetrations and *fire-resistant joint systems* shall be determined in accordance Sections 714 and 715, respectively.

703.2.1 Nonsymmetrical wall construction. Interior walls and partitions of nonsymmetrical construction shall be tested with both faces exposed to the furnace, and the assigned *fire-resistance rating* shall be the shortest duration obtained from the two tests conducted in compliance with ASTM E119 or UL 263. Where evidence is furnished to show that the wall was tested with the least fire-resistant side exposed to the furnace, subject to acceptance of the *building official*, the wall need not be subjected to tests from the opposite side (see Section 705.5 for *exterior walls*).

703.2.2 Combustible components. Combustible aggregates are permitted in gypsum and Portland cement concrete mixtures for fire-resistance-rated construction. Any component material or admixture is permitted in assemblies if the resulting tested assembly meets the *fire-resistance* test requirements of this code.

703.2.3 Restrained classification. Fire-resistance-rated assemblies tested under ASTM E119 or UL 263 shall not be considered to be restrained unless evidence satisfactory to the *building official* is furnished by the *registered design professional* showing that the construction qualifies for a restrained classification in accordance with ASTM E119 or UL 263. Restrained construction shall be identified on the *construction documents*.

703.2.4 Supplemental features. Where materials, systems or devices that have not been tested as part of a fire-resistance-rated assembly are incorporated into the building element, component or assembly, sufficient data shall be made available to the *building official* to show that the required *fire-resistance rating* is not reduced.

703.2.5 Exterior bearing walls. In determining the *fire-resistance rating* of exterior bearing walls, compliance with the ASTM E119 or UL 263 criteria for unexposed surface temperature rise and ignition of cotton waste due to passage of flame or gases is required only for a period of time corresponding to the required *fire-resistance rating* of an exterior nonbearing wall with the same *fire separation distance*, and in a building of the same group. Where the *fire-resistance rating* determined in accordance with this exception exceeds the *fire-resistance rating* determined in accordance with ASTM E119 or UL 263, the fire exposure time period, water pressure and application duration criteria for the hose stream test of ASTM E119 or UL 263 shall be based on the *fire-resistance rating* determined in accordance with this section.

[S] 703.3 Methods for determining fire resistance. The application of any of the methods listed in this section shall be based on the fire exposure and acceptance criteria specified in ASTM E119 or UL 263. The required *fire resistance* of a building element, component or assembly shall be permitted to be established by any of the following methods or procedures:

1. *Fire-resistance* designs documented in approved sources.
2. Prescriptive designs of fire-resistance-rated building elements, components or assemblies as prescribed in Section 721.
3. Calculations in accordance with Section 722.
4. Engineering analysis based on a comparison of building element, component or assemblies designs having *fire-resistance ratings* as determined by the test procedures set forth in ASTM E119 or UL 263.
5. Alternative protection methods as allowed by Section ((~~104.11~~)) 104.5.
6. *Fire-resistance* designs certified by an approved agency.

703.4 Automatic sprinklers. Under the prescriptive fire-resistance requirements of this code, the *fire-resistance rating* of a building element, component or assembly shall be established without the use of *automatic sprinklers* or any other fire suppression system being incorporated as part of the assembly tested in accordance with the fire exposure, procedures and acceptance criteria specified in ASTM E119 or UL 263. However, this section shall not prohibit or limit the duties and powers of the *building official* allowed by Sections ((~~104.10~~)) 104.4 and ((~~104.11~~)) 104.5.

703.5 Noncombustibility tests. The tests indicated in Sections 703.5.1 and 703.5.2 shall serve as criteria for acceptance of building materials as set forth in Sections 602.2, 602.3 and 602.4 in Types I, II, III and IV construction. The term "noncombustible" does not apply to the flame spread characteristics of *interior finish* or *trim* materials. A material shall not be classified as a noncombustible building construction material if it is subject to an increase in combustibility or flame spread beyond the limitations herein established through the effects of age, moisture or other atmospheric conditions.

703.5.1 Elementary materials. Materials required to be noncombustible shall be tested in accordance with ASTM E136.

703.5.2 Composite materials. Materials having a structural base of noncombustible material as determined in accordance with Section 703.5.1 with a surfacing not more than 0.125 inch (3.18 mm) thick that has a *flame spread index* not greater than 50 when tested in accordance with ASTM E84 or UL 723 shall be acceptable as noncombustible materials.

703.6 Fire-resistance-rated glazing. Fire-resistance-rated glazing, when tested in accordance with ASTM E119 or UL 263 and complying with the requirements of Section 707, shall be permitted. Fire-resistance-rated glazing shall bear a *label* marked in accordance with Table 716.1(1) issued by an agency and shall be permanently identified on the glazing.

[S] 703.7 Marking and identification. Where there is an accessible concealed floor, floor-ceiling or *attic* space, *fire walls*, *fire barriers*, *fire partitions*, *smoke barriers* and smoke partitions or any other wall required to have protected openings or penetrations shall be effectively and permanently identified with signs or stenciling in the concealed space. Such identification shall:

1. Be located within 15 feet (4572 mm) of the end of each wall and at intervals not exceeding 30 feet (9144 mm) measured horizontally along the wall or partition.
2. Include lettering not less than 3 inches (76 mm) in height with a minimum 3/8-inch (9.5 mm) stroke in a contrasting color incorporating the suggested wording, "FIRE AND/OR SMOKE BARRIER—PROTECT ALL OPENINGS," or other similar wording.

[W] 703.8 Determination of noncombustible protection time contribution. The time, in minutes, contributed to the fire-resistance rating by the noncombustible protection of mass timber building elements, components, or assemblies, shall be established through a comparison of assemblies tested using procedures set forth in ASTM E119 or UL 263. The test assemblies shall be identical in construction, loading, and materials, other than the noncombustible protection. The two test assemblies shall be tested to the same criteria of structural failure.

DRAFT

1. Test Assembly 1 shall be without protection.
2. Test Assembly 2 shall include the representative noncombustible protection. The protection shall be fully defined in terms of configuration details, attachment details, joint sealing details, accessories and all other relevant details.

The noncombustible protection time contribution shall be determined by subtracting the fire resistance time, in minutes, of Test Assembly 1 from the fire resistance time, in minutes, of Test Assembly 2.

[W] 703.9 Sealing of adjacent mass timber elements. In buildings of Type IV-A, IV-B, and IV-C construction, sealant or adhesive shall be provided to resist the passage of air in the following locations:

1. At abutting edges and intersections of mass timber building elements required to be fire-resistance-rated.
2. At abutting intersections of mass timber building elements and building elements of other materials where both are required to be fire-resistance-rated.

Sealants shall meet the requirements of ASTM C920. Adhesives shall meet the requirements of ASTM D3498.

SECTION 704
FIRE-RESISTANCE RATING OF STRUCTURAL MEMBERS

704.1 Requirements. The *fire-resistance ratings* of structural members and assemblies shall comply with this section and the requirements for the type of construction as specified in Table 601. The *fire-resistance ratings* shall be not less than the ratings required for the fire-resistance-rated assemblies supported by the structural members.

Exception: *Fire barriers*, *fire partitions*, *smoke barriers* and *horizontal assemblies* as provided in Sections 707.5, 708.4, 709.4 and 711.2, respectively.

704.2 Column protection. Where columns are required to have protection to achieve a *fire-resistance rating*, the entire column shall be provided individual encasement protection by protecting it on all sides for the full column height, including connections to other structural members, with materials having the required *fire-resistance rating*. Where the column extends through a ceiling, the encasement protection shall be continuous from the top of the foundation or floor/ceiling assembly below through the ceiling space to the top of the column.

Exception: Columns that meet the limitations of Section 704.4.1.

704.3 Protection of the primary structural frame other than columns. Members of the primary structural frame other than columns that are required to have protection to achieve a *fire-resistance rating* and support more than two floors or one floor and roof, or support a load-bearing wall or a nonload-bearing wall more than two stories high, shall be provided individual encasement protection by protecting them on all sides for the full length, including connections to other structural members, with materials having the required *fire-resistance rating*.

Exception: Individual encasement protection on all sides shall be permitted on all exposed sides provided that the extent of protection is in accordance with the required *fire-resistance rating*, as determined in Section 703.

704.4 Protection of secondary members. Secondary members that are required to have protection to achieve a *fire-resistance rating* shall be protected by individual encasement protection.

704.4.1 Light-frame construction. Studs, columns and boundary elements that are integral elements in *walls* of light-frame construction and are located entirely between the top and bottom plates or tracks shall be permitted to have required *fire-resistance ratings* provided by the membrane protection provided for the *wall*.

[S] 704.4.2 Horizontal assemblies. ((*Horizontal*)) *Secondary members* within horizontal *assemblies* are permitted to be protected with a membrane or ceiling where the membrane or ceiling provides the required *fire-resistance rating* and is installed in accordance with Section 711.

704.5 Truss protection. The required thickness and construction of fire-resistance-rated assemblies enclosing trusses shall be based on the results of full-scale tests or combinations of tests on truss components or on *approved* calculations based on such tests that satisfactorily demonstrate that the assembly has the required *fire resistance*.

704.6 Attachments to structural members. The edges of lugs, brackets, rivets and bolt heads attached to structural members shall be permitted to extend to within 1 inch (25 mm) of the surface of the fire protection.

[W] 704.6.1 Secondary (nonstructural) attachments to structural members. Where primary and secondary structural steel members require fire protection, secondary (nonstructural) tubular steel attachments to those structural members shall be protected with the same fire resistive rating as required for the structural member. The protection shall extend from the structural member a distance of not less than 12 inches. An open tubular attachment shall be filled with an equivalent fire protection method for a distance of 12-inch length from the structural member, or the entire length of the open tube, whichever is less.

704.7 Reinforcing. Thickness of protection for concrete or masonry reinforcement shall be measured to the outside of the reinforcement except that stirrups and spiral reinforcement ties are permitted to project not more than 0.5-inch (12.7 mm) into the protection.

DRAFT

SECTION 705
EXTERIOR WALLS AND PROJECTIONS

[W] 705.1 General. *Exterior walls* and *projections* shall comply with this section.

[W][S] 705.2 Projections. Cornices, eave overhangs, exterior balconies and similar projections extending beyond the ((~~exterior wall~~)) *building area* shall conform to the requirements of this section and Section 1405. Exterior egress balconies and exterior exit stairways and ramps shall comply with Sections 1021 and 1027, respectively. Projections shall not extend any closer to the line used to determine the *fire separation distance* than shown in Table 705.2.

Exceptions:

1. Buildings on the same lot and considered as portions of one building in accordance with Section 705.3 are not required to comply with this section for projections between the buildings.
2. Projecting floors complying with Section 705.2.5 are not required to comply with the projection limitations of Table 705.2.

TABLE 705.2
MINIMUM DISTANCE OF PROJECTION

FIRE SEPARATION DISTANCE-FSD (feet)	MINIMUM DISTANCE FROM LINE USED TO DETERMINE FSD
0 to less than 2	Projections not permitted
2 to less than 3	24 inches
3 to less than 5	24 inches plus 8 inches for every foot of FSD beyond 3 feet or fraction thereof
5 or greater	40 inches

For SI: 1 foot = 304.8 mm; 1 inch = 25.4 mm.

Code Alternate CA705.2: Private balconies and decks constructed with grated metal decking that allows smoke and heat to ventilate are permitted to be considered projections and not floor area. Noncombustible exterior structure supporting only the grated balcony or deck is not required to be fire-resistance rated. Exterior exposed noncombustible columns supporting the grated decks are not required to be fire-resistance rated.

Interpretation I705.2: For purposes of Section 705.2, gutters 6 inches or less in width that are not an integral part of the structure are not considered projections on Group R-3 occupancies and on Group U accessory occupancies.

705.2.1 Types I and II construction. Projections from walls of Type I or II construction shall be of noncombustible materials or combustible materials as allowed by Sections 705.2.3.1 and 705.2.4.

705.2.2 Type III, IV or V construction. Projections from walls of Type III, IV or V construction shall be of any *approved* material.

Eave overhangs from walls of Types IIIA, IV or VA construction or from walls that are otherwise required to be of *fire-resistance-rated* construction shall be finished on the underside with at least 1/2-inch (13 mm) gypsum sheathing or equivalent or shall be heavy-timber construction conforming to Section 602.4. Vents are permitted to be installed if the vent openings are covered with corrosion–resistant metal mesh.

See Section 714.4.2 for allowable vent penetrations.

705.2.3 Combustible projections. Combustible projections extending to within 5 feet (1524 mm) of the line used to determine the *fire separation distance* shall be of not less than 1-hour *fire-resistance-rated* construction, heavy timber construction, complying with Section 2304.11, *fire-retardant-treated wood* or as permitted by Section 705.2.3.1.

Exceptions:

1. Type VB construction shall be allowed for combustible projections in Group R-3 and U occupancies with a *fire separation distance* greater than or equal to 5 feet (1524 mm). **
2. Eave overhangs are permitted to be of less than one-hour construction provided the underside is finished with at least 1/2-inch (13 mm) gypsum sheathing or equivalent.

705.2.3.1 Balconies and similar projections. Balconies and similar projections of combustible construction other than fire-retardant-treated wood shall be fire-resistance rated where required by Table 601 for floor construction or shall be of ((~~heavy timber~~)) Type IV construction in accordance with Section 2304.11. The aggregate length of the projections shall not exceed 50 percent of the building's perimeter on each floor.

Exceptions:

1. On buildings of Types I and II construction, three stories or less above grade plane, fire-retardant-treated wood shall be permitted for balconies, porches, decks and exterior stairways not used as required exits.
2. Untreated wood and plastic composites that comply with ASTM D7032 and Section 2612 are permitted for pickets, rails and similar guard components that are limited to 42 inches (1067 mm) in height.

DRAFT

3. Balconies and similar projections on buildings of Types III, IV and V construction shall be permitted to be of Type V construction and shall not be required to have a *fire-resistance rating* where sprinkler protection is extended to these areas.
4. Where sprinkler protection is extended to the balcony areas, the aggregate length of the balcony on each floor shall not be limited.

705.2.4 Bay and oriel windows. Bay and oriel windows constructed of combustible materials shall conform to the type of construction required for the building to which they are attached.

Exception: Fire-retardant-treated wood shall be permitted on buildings three stories or less above grade plane of Type I, II, III or IV construction.

705.2.5 Projecting floors. Where the fire separation distance on a lower floor is greater than the fire separation distance on the floor immediately above, the projecting floor shall have not less than the *fire-resistance rating* as the exterior wall above based on Table 602. The *fire-resistant rating* of the *horizontal* portion shall be continuous to the lower *vertical* wall.

[S] 705.3 Buildings on the same lot. For the purposes of determining the required wall and opening protection, projections and roof-covering requirements, buildings on the same lot shall be assumed to have an imaginary line between them.

Where a new building is to be erected on the same lot as an existing building, the location of the assumed imaginary line with relation to the existing building shall be such that the *exterior wall* and opening protection of the existing building meet the criteria as set forth in Sections 705.5 and 705.8.

Exceptions:

1. Two or more buildings on the same lot shall be either regulated as separate buildings or shall be considered as portions of one building if the aggregate area of such buildings is within the limits specified in Chapter 5 for a single building. Where the buildings contain different occupancy groups or are of different types of construction, the area shall be that allowed for the most restrictive occupancy or construction.
2. Where an S-2 parking garage of Construction Type I or IIA is erected on the same lot as a Group R-2 building, and ((~~there is no *fire separation distance* between these buildings~~)) where openings are not permitted or are required by this code to be protected, then the adjoining *exterior walls* between the buildings are permitted to have occupant use openings in accordance with Section 706.8. However, opening protectives in such openings shall only be required in the exterior wall of the S-2 parking garage, not in the exterior wall openings in the R-2 building, and these opening protectives in the exterior wall of the S-2 parking garage shall be not less than 1 1/2-hour *fire protection rating*.

705.4 Materials. *Exterior walls* shall be of materials permitted by the building type of construction.

705.5 Fire-resistance ratings. *Exterior walls* shall be fire-resistance rated in accordance with Tables 601 and 602 and this section. The required *fire-resistance rating* of *exterior walls* with a *fire separation distance* of greater than 10 feet (3048 mm) shall be rated for exposure to fire from the inside. The required *fire-resistance rating* of *exterior walls* with a *fire separation distance* of less than or equal to 10 feet (3048 mm) shall be rated for exposure to fire from both sides.

705.6 Structural stability. *Exterior walls* shall extend to the height required by Section 705.11. Interior structural elements that brace the exterior wall but that are not located within the plane of the exterior wall shall have the minimum *fire-resistance rating* required in Table 601 for that structural element. Structural elements that brace the exterior wall but are located outside of the exterior wall or within the plane of the exterior wall shall have the minimum *fire-resistance rating* required in Tables 601 and 602 for the exterior wall.

705.7 Unexposed surface temperature. Where protected openings are not limited by Section 705.8, the limitation on the rise of temperature on the unexposed surface of *exterior walls* as required by ASTM E119 or UL 263 shall not apply. Where protected openings are limited by Section 705.8, the limitation on the rise of temperature on the unexposed surface of *exterior walls* as required by ASTM E119 or UL 263 shall not apply provided that a correction is made for radiation from the unexposed *exterior wall* surface in accordance with the following formula:

(Equation 7-1)

$$A_e = A + (A_f \times F_{eo})$$

where:

A_e = Equivalent area of protected openings.

A = Actual area of protected openings.

A_f = Area of *exterior wall* surface in the *story* under consideration exclusive of openings, on which the temperature limitations of ASTM E119 or UL 263 for walls are exceeded.

F_{eo} = An "equivalent opening factor" derived from Figure 705.7 based on the average temperature of the unexposed wall surface and the *fire-resistance rating* of the wall.

DRAFT

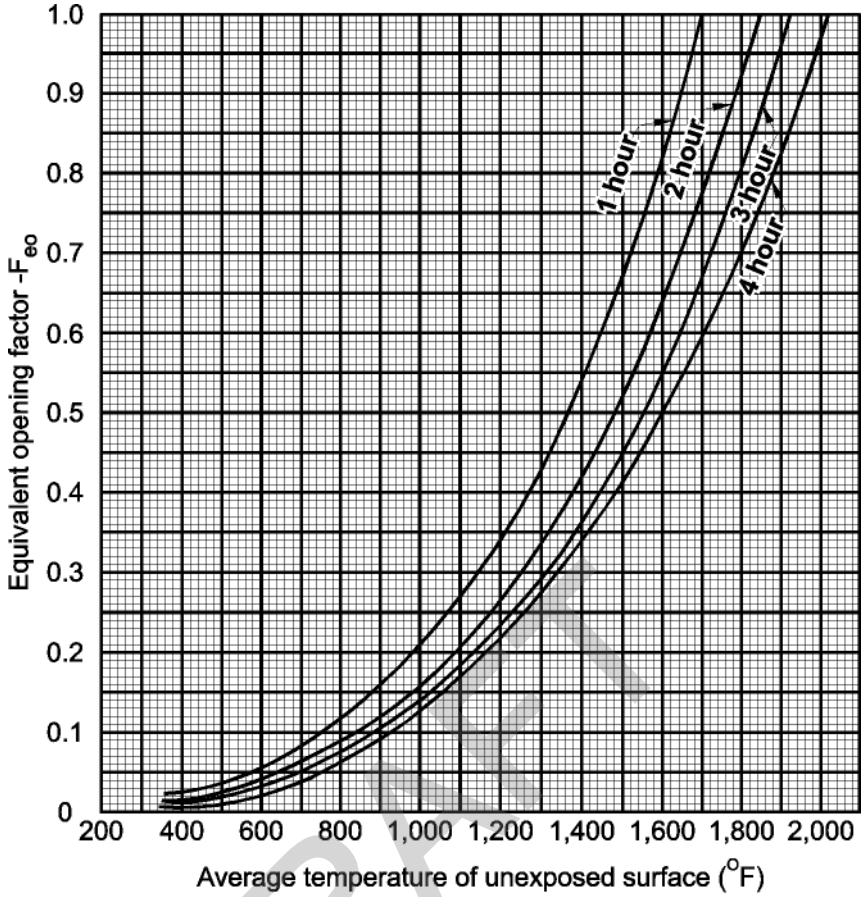

For SI: °C = [(°F) - 32] / 1.8.

FIGURE 705.7
EQUIVALENT OPENING FACTOR

[S] 705.8 Openings. Openings in *exterior walls* shall comply with Sections 705.8.1 through 705.8.6. For spaces that are not provided with *exterior walls*, the vertical plane at the edge of the horizontal projection of the roof or floor is considered an exterior wall.

DRAFT

[S] TABLE 705.8
MAXIMUM AREA OF EXTERIOR WALL OPENINGS BASED ON FIRE SEPARATION DISTANCE AND DEGREE OF OPENING PROTECTION

FIRE SEPARATION DISTANCE (feet)[l]	DEGREE OF OPENING PROTECTION	ALLOWABLE AREA[a]
0 to less than 3[b, c, k]	Unprotected, Nonsprinklered (UP, NS)	Not Permitted[k]
	Unprotected, Sprinklered (UP, S)[i]	Not Permitted[k]
	Protected (P)	Not Permitted[k]
3 to less than 5[d, e]	Unprotected, Nonsprinklered (UP, NS)	Not Permitted
	Unprotected, Sprinklered (UP, S)[i]	15%
	Protected (P)	15%
5 to less than 10[e, f, j]	Unprotected, Nonsprinklered (UP, NS)	10%[h]
	Unprotected, Sprinklered (UP, S)[i]	25%
	Protected (P)	25%
10 to less than 15[e, f, g, j]	Unprotected, Nonsprinklered (UP, NS)	15%[h]
	Unprotected, Sprinklered (UP, S)[i]	45%
	Protected (P)	45%
15 to less than 20[f, g, j]	Unprotected, Nonsprinklered (UP, NS)	25%
	Unprotected, Sprinklered (UP, S)[i]	75%
	Protected (P)	75%
20 to less than 25[f, g, j]	Unprotected, Nonsprinklered (UP, NS)	45%
	Unprotected, Sprinklered (UP, S)[i]	No Limit
	Protected (P)	No Limit
25 to less than 30[f, g, j]	Unprotected, Nonsprinklered (UP, NS)	70%
	Unprotected, Sprinklered (UP, S)[i]	No Limit
	Protected (P)	No Limit
30 or greater	Unprotected, Nonsprinklered (UP, NS)	No Limit
	Unprotected, Sprinklered (UP, S)[i]	No Limit
	Protected (P)	No Limit

For SI: 1 foot = 304.8 mm.
UP, NS = Unprotected openings in buildings not equipped throughout with an automatic sprinkler system in accordance with Section 903.3.1.1.
UP, S = Unprotected openings in buildings equipped throughout with an automatic sprinkler system in accordance with Section 903.3.1.1.
P = Openings protected with an opening protective assembly in accordance with Section 705.8.2.

a. Values indicated are the percentage of the area of the exterior wall, per story.
b. For the requirements for fire walls of buildings with differing heights, see Section 706.6.1.
c. For openings in a fire wall for buildings on the same lot, see Section 706.8.
d. The maximum percentage of unprotected and protected openings shall be 25 percent for Group R-3 occupancies.
e. Unprotected openings shall not be permitted for openings with a fire separation distance of less than 15 feet for Group H-2 and H-3 occupancies.
f. The area of unprotected and protected openings shall not be limited for Group R-3 occupancies, with a fire separation distance of 5 feet or greater.
g. The area of openings in an open parking structure with a fire separation distance of 10 feet or greater shall not be limited.
h. Includes buildings accessory to Group R-3.
i. Not applicable to Group H-1, H-2 and H-3 occupancies.
j. The area of openings in a building containing only a Group U occupancy private garage or carport with a fire separation distance of 5 feet or greater shall not be limited.
k. For openings between S-2 parking garage and Group R-2 building, see Section 705.3, Exception 2.
l. For the purpose of calculating the maximum area of *exterior wall* openings on *existing buildings*, the *fire separation distances* indicated in the chart may be reduced by a maximum of 4 inches, solely for the purpose of adding insulation to the building exterior.

705.8.1 Allowable area of openings. The maximum area of unprotected and protected openings permitted in an *exterior wall* in any *story* of a building shall not exceed the percentages specified in Table 705.8 based on the *fire separation distance* of each individual story.

Exceptions:

1. In other than Group H occupancies, unlimited unprotected openings are permitted in the first *story* above grade plane where the wall faces one of the following:
   1.1. A street and has a *fire separation distance* of more than ((~~15~~)) 30 feet (((~~4572~~)) 9144 mm).

DRAFT

1.2. An unoccupied space. The unoccupied space shall be on the same lot or dedicated for public use, shall be not less than 30 feet (9144 mm) in width and shall have access from a street by a posted fire lane in accordance with the *International Fire Code*.

2. Buildings whose exterior bearing walls, exterior nonbearing walls and exterior primary structural frame are not required to be fire-resistance rated shall be permitted to have unlimited unprotected openings.

Interpretation I705.8: For purposes of Section 705.8, where the *fire separation distance* on a lower floor is greater than the *fire separation distance* on the floor above, there are two options for wall, soffit, and opening protection. The fire-resistance rating of the soffit shall be no less than required rating for floor construction by Table 601.

Option 1: The plane that projects vertically from the edge of the *story*, roof or deck above shall comply with the exterior wall and opening protection requirements. The portion of the plane where the wall is recessed is considered an opening. The fire-resistance rating of the soffit shall be no less than required rating for the recessed exterior wall.

Option 2: Recessed *exterior walls* shall comply with the wall fire rating and wall opening protection percentages as if the *fire separation distance* is equal to the *story*, roof or deck above. The soffit shall be fire-resistance rated not less than as required for the recessed exterior wall.

See Figures I705.8a and I705.8b.

Interpretation I705.8:
Option 1. Exterior wall protection extends from A to B to C.
Option 2. Exterior wall protection extends from A to B to B1 to C1. Fire-resistance rating and opening protection for wall B-B1-C1, and fire-resistance rating at soffit B-B1-C1-C comply with requirements for wall B-C. The length of the wall segment B-B1 shall be included when calculating the percentage of openings allowed.

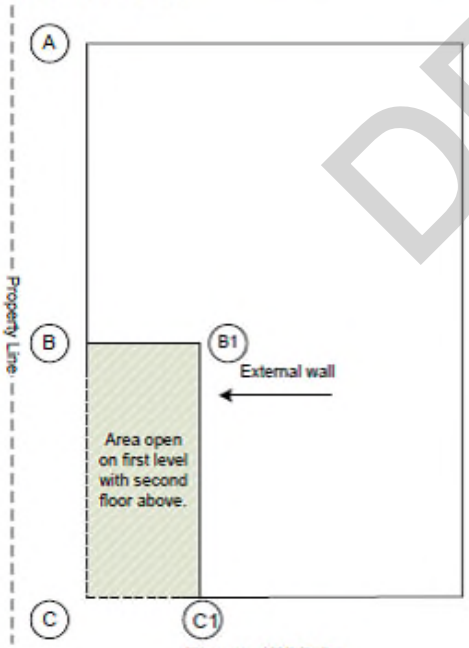

Figure I705.8a
Plan View

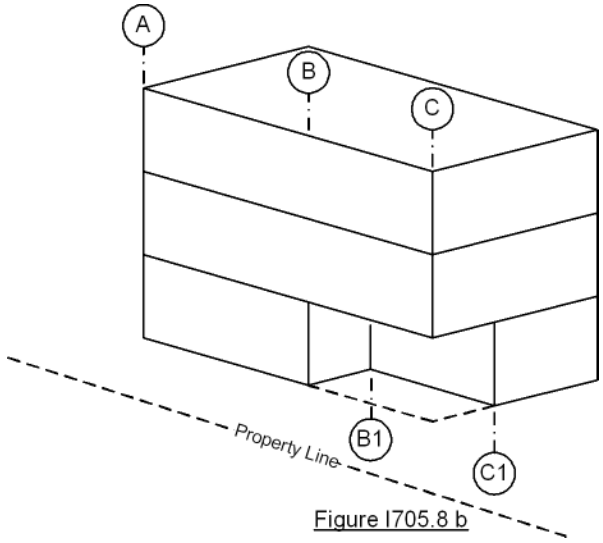

Figure I705.8 b

Note: Opening protection in wall C to C1 isn't considered in Figures I705.8a and I705.8b because it is perpendicular to the property line.

DRAFT

3. Walls that terminate at roofs of not less than 2-hour fire-resistance-rated construction or where the roof, including the deck or slab and supporting construction, is constructed entirely of noncombustible materials.
4. One-hour fire-resistance-rated *exterior walls* that terminate at the underside of the roof sheathing, deck or slab, provided that:
   4.1. Where the roof/ceiling framing elements are parallel to the walls, such framing and elements supporting such framing shall not be of less than 1-hour fire-resistance-rated construction for a width of 4 feet (1220 mm) for Groups R and U and 10 feet (3048 mm) for other occupancies, measured from the interior side of the wall.
   4.2. Where roof/ceiling framing elements are not parallel to the wall, the entire span of such framing and elements supporting such framing shall not be of less than 1-hour fire-resistance-rated construction.
   4.3. Openings in the roof shall not be located within 5 feet (1524 mm) of the 1-hour fire-resistance-rated *exterior wall* for Groups R and U and 10 feet (3048 mm) for other occupancies, measured from the interior side of the wall.
   4.4. The entire building shall be provided with not less than a Class B roof covering.
5. In Groups R-2 and R-3 where the entire building is provided with a Class C roof covering, the *exterior wall* shall be permitted to terminate at the underside of the roof sheathing or deck in Types III, IV and V construction, provided that one or both of the following criteria is met:
   5.1. The roof sheathing or deck is constructed of *approved* noncombustible materials or of *fire-retardant-treated wood* for a distance of 4 feet (1220 mm).
   5.2. The roof is protected with 0.625-inch (16 mm) Type X gypsum board directly beneath the underside of the roof sheathing or deck, supported by not less than nominal 2-inch (51 mm) ledgers attached to the sides of the roof framing members for a minimum distance of 4 feet (1220 mm).
6. Where the wall is permitted to have not less than 25 percent of the *exterior wall* areas containing unprotected openings based on *fire separation distance* as determined in accordance with Section 705.8.

705.11.1 Parapet construction. Parapets shall have the same *fire-resistance rating* as that required for the supporting wall, and on any side adjacent to a roof surface, shall have noncombustible faces for the uppermost 18 inches (457 mm), including counterflashing and coping materials. The height of the parapet shall be not less than 30 inches (762 mm) above the point where the roof surface and the wall intersect. Where the roof slopes toward a parapet at a slope greater than two units vertical in 12 units horizontal (16.7-percent slope), the parapet shall extend to the same height as any portion of the roof within a *fire separation distance* where protection of wall openings is required, but the height shall be not less than 30 inches (762 mm).

DRAFT

SECTION 706
FIRE WALLS

706.1 General. *Fire walls* shall be constructed in accordance with Sections 706.2 through 706.11. The extent and location of such *fire walls* shall provide a complete separation. Where a *fire wall* separates occupancies that are required to be separated by a *fire barrier* wall, the most restrictive requirements of each separation shall apply.

706.1.1 Party walls. Any wall located on a *lot line* between adjacent buildings, which is used or adapted for joint service between the two buildings, shall be constructed as a *fire wall* in accordance with Section 706. Party walls shall be constructed without openings and shall create separate buildings.

Exceptions:

1. Openings in a party wall separating an *anchor building* and a mall shall be in accordance with Section 402.4.2.2.1.
2. *Fire walls* are not required on lot lines dividing a building for ownership purposes where the aggregate height and area of the portions of the building located on both sides of the lot line do not exceed the maximum height and area requirements of this code. For the code official's review and approval, he or she shall be provided with copies of dedicated access easements and contractual agreements that permit the owners of portions of the building located on either side of the lot line access to the other side for purposes of maintaining fire and life safety systems necessary for the operation of the building.

[S] ((~~706.2 Structural stability.~~ ~~*Fire walls* shall be designed and constructed to allow collapse of the structure on either side without collapse of the wall under fire conditions. *Fire walls* designed and constructed in accordance with NFPA 221 shall be deemed to comply with this section.~~

~~**Exception:** In Seismic Design Categories D through F, where double *fire walls* are used in accordance with NFPA 221, floor and roof sheathing not exceeding 3/4 inch (19.05 mm) thickness shall be permitted to be continuous through the wall assemblies of light frame construction.~~))

[S] 706.3 Materials. *Fire walls* that separate a building of Type I or II construction from a building of any construction type shall be of any *approved* noncombustible materials. Other *fire walls* shall be built of materials consistent with the types permitted for the type of construction of the building.

((~~Exception:~~ ~~Buildings of Type V construction.~~))

706.4 Fire-resistance rating. *Fire walls* shall have a *fire-resistance rating* of not less than that required by Table 706.4.

TABLE 706.4
FIRE WALL FIRE-RESISTANCE RATINGS

GROUP	FIRE-RESISTANCE RATING (hours)
A, B, E, H-4, I, R-1, R-2, U	3[a]
F-1, H-3[b], H-5, M, S-1	3
H-1, H-2	4[b]
F-2, S-2, R-3 ((~~, R-4~~))	2

a. In Type II or V construction, walls shall be permitted to have a 2-hour fire-resistance rating.
b. For Group H-1, H-2 or H-3 buildings, also see Sections 415.7 and 415.8.

706.5 Horizontal continuity. *Fire walls* shall be continuous from *exterior wall* to *exterior wall* and shall extend not less than 18 inches (457 mm) beyond the exterior surface of *exterior walls*.

Exceptions:

1. *Fire walls* shall be permitted to terminate at the interior surface of combustible exterior sheathing or siding provided that the *exterior wall* has a *fire-resistance rating* of not less than 1 hour for a horizontal distance of not less than 4 feet (1220 mm) on both sides of the *fire wall*. Openings within such *exterior walls* shall be protected by opening protectives having a *fire protection rating* of not less than 3/4 hour.
2. *Fire walls* shall be permitted to terminate at the interior surface of noncombustible exterior sheathing, exterior siding or other noncombustible exterior finishes provided that the sheathing, siding or other exterior noncombustible finish extends a horizontal distance of not less than 4 feet (1220 mm) on both sides of the *fire wall*.
3. *Fire walls* shall be permitted to terminate at the interior surface of noncombustible exterior sheathing where the building on each side of the *fire wall* is protected by an *automatic sprinkler system* installed in accordance with Section 903.3.1.1 or 903.3.1.2.

706.5.1 Exterior walls. Where the *fire wall* intersects *exterior walls*, the *fire-resistance rating* and opening protection of the *exterior walls* shall comply with one of the following:

1. The *exterior walls* on both sides of the *fire wall* shall have a 1-hour *fire-resistance rating* with 3/4-hour protection where opening protection is required by Section 705.8. The *fire-resistance rating* of the *exterior wall* shall extend not less than 4 feet (1220 mm) on each side of the intersection of the *fire wall* to *exterior wall*. *Exterior wall* intersections at *fire walls* that form an angle equal to or greater than 180 degrees (3.14 rad) do not need *exterior wall* protection.
2. Buildings or spaces on both sides of the intersecting *fire wall* shall assume to have an imaginary *lot line* at the *fire wall* and extending beyond the exterior of the *fire wall*. The location of the assumed line in relation to the *exterior walls* and the *fire wall* shall be such that the *exterior wall* and opening protection meet the requirements set forth in Sections 705.5 and 705.8. Such protection is not required for *exterior walls* terminating at *fire walls* that form an angle equal to or greater than 180 degrees (3.14 rad).

706.5.2 Horizontal projecting elements. *Fire walls* shall extend to the outer edge of horizontal projecting elements such as balconies, roof overhangs, canopies, marquees and similar projections that are within 4 feet (1220 mm) of the *fire wall*.

Exceptions:

1. Horizontal projecting elements without concealed spaces, provided that the *exterior wall* behind and below the projecting element has not less than 1-hour fire-resistance-rated construction for a distance not less than the depth of the projecting element on both sides of the *fire wall*. Openings within such *exterior walls* shall be protected by opening protectives having a *fire protection rating* of not less than 3/4 hour.
2. Noncombustible horizontal projecting elements with concealed spaces, provided that a minimum 1-hour fire-resistance-rated wall extends through the concealed space. The projecting element shall be separated from the building by not less than 1-hour fire-resistance-rated construction for a distance on each side of the *fire wall* equal to the depth of the projecting element. The wall is not required to extend under the projecting element where the building *exterior wall* is not less than 1-hour *fire-resistance rated* for a distance on each side of the *fire wall* equal to the depth of the projecting element. Openings within such *exterior walls* shall be protected by opening protectives having a *fire protection rating* of not less than 3/4 hour.

DRAFT

3. For combustible horizontal projecting elements with concealed spaces, the *fire wall* need only extend through the concealed space to the outer edges of the projecting elements. The *exterior wall* behind and below the projecting element shall be of not less than 1-hour fire-resistance-rated construction for a distance not less than the depth of the projecting elements on both sides of the *fire wall*. Openings within such *exterior walls* shall be protected by opening protectives having a *fire protection rating* of not less than 3/4 hour.

[W][S] 706.6 Vertical continuity. *Fire walls* shall extend from the foundation to a termination point not less than 30 inches (762 mm) above both adjacent roofs.

Exceptions:

1. Stepped buildings in accordance with Section 706.6.1.
2. Two-hour fire-resistance-rated walls shall be permitted to terminate at the underside of the roof sheathing, deck or slab, provided that:
   - 2.1. The ((~~lower~~)) roof assembly within 4 feet (1220 mm) of the wall has not less than a 1-hour *fire-resistance rating* and the entire length and span of supporting elements for the rated roof assembly has a *fire-resistance rating* of not less than 1 hour.
   - 2.2. Openings in the roof shall not be located within 4 feet (1220 mm) of the *fire wall*.
   - 2.3. Each building shall be provided with not less than a Class B roof covering.
3. Walls shall be permitted to terminate at the underside of noncombustible roof sheathing, deck or slabs where both buildings are provided with not less than a Class B roof covering. Openings in the roof shall not be located within 4 feet (1220 mm) of the *fire wall*.
4. In buildings of Types III, IV and V construction, walls shall be permitted to terminate at the underside of combustible roof sheathing or decks, provided that all of the following requirements are met:
   - 4.1. Roof openings are not less than 4 feet (1220 mm) from the *fire wall*.
   - 4.2. The roof is covered with a minimum Class B roof covering.
   - 4.3. The roof sheathing or deck is constructed of *fire-retardant-treated wood* for a distance of 4 feet (1220 mm) on both sides of the wall or the roof is protected with 5/8-inch (15.9 mm) Type X gypsum board directly beneath the underside of the roof sheathing or deck, supported by not less than 2-inch (51 mm) nominal ledgers attached to the sides of the roof framing members for a distance of not less than 4 feet (1220 mm) on both sides of the *fire wall*.
5. In buildings designed in accordance with Section 510.2, *fire walls* located above the 3-hour *horizontal assembly* required by Section 510.2, Item 1 shall be permitted to extend from the top of this *horizontal assembly*.
6. Buildings with sloped roofs in accordance with Section 706.6.2.

706.6.1 Stepped buildings. Where a *fire wall* serves as an *exterior wall* for a building and separates buildings having different roof levels, such wall shall terminate at a point not less than 30 inches (762 mm) above the lower roof level. ((~~, provided the *exterior wall* for a height of 15 feet (4572 mm)~~)) Exterior walls above the ((~~lower roof is~~)) fire wall extending more than 30 inches above the lower roof shall be of not less than 1-hour fire-resistance-rated construction from both sides with openings protected by fire assemblies having a *fire protection rating* of not less than 3/4 hour. Portions of the exterior walls exceeding 15 feet above the lower roof shall be permitted to be of *non-fire-resistance-rated* construction unless otherwise required by other provisions of this code.

Exception: ((~~Where the~~)) A *fire wall* ((~~terminates~~)) serving as part of an exterior wall for a building that separates buildings having different roof levels shall be permitted to terminate at the underside of the roof sheathing, deck or slab of the lower roof, provided ((~~that:~~)) items 1, 2 and 3 below are met. The exterior wall above the fire wall is not required to be of fire-resistance rated construction, unless required by other provisions of this code.

1. The lower roof assembly within 10 feet (3048 mm) of the wall has not less than a 1-hour *fire-resistance rating*. ((~~and the~~))
2. The entire length and span of supporting elements for the rated roof assembly ((~~has~~)) shall have a *fire-resistance rating* of not less than 1 hour.

((~~2~~)) 3. Openings in the lower roof ((~~shall not be~~)) are not located within 10 feet (3048 mm) of the *fire wall*.

706.6.2 Buildings with sloped roofs. Where a *fire wall* also serves as an interior wall for a building, and the roof on one side or both sides of the *fire wall* slopes toward the *fire wall* at a slope greater than two units vertical in 12 units horizontal (2:12), the *fire wall* shall extend to a height equal to the height of the roof located 4 feet (1219 mm) from the *fire wall* plus 30 inches (762 mm). The extension of the *fire wall* shall be not less than 30 inches (762 mm).

DRAFT

Exceptions:

1. Two-hour fire-resistance-rated walls shall be permitted to terminate at the underside of the roof sheathing, deck or slab, provided:
   1.1. The *roof assembly* within 4 feet (1220 mm) of the wall has not less than a 1-hour *fire-resistance rating* and the entire length and span of supporting elements for the rated *roof assembly* has a *fire-resistance rating* of not less than 1 hour.
   1.2. Openings in the roof shall not be located within 4 feet (1220 mm) of the *fire wall.*
   1.3. Each *building* shall be provided with not less than a Class B roof covering.
2. Walls shall be permitted to terminate at the underside of noncombustible roof sheathing, deck or slabs where both *buildings* are provided with not less than a Class B roof covering. Openings in the roof shall not be located within 4 feet (1220 mm) of the *fire wall.*
3. In buildings of Type III, IV and V construction, walls shall be permitted to terminate at the underside of combustible roof sheathing or decks, provided:
   3.1. There are no openings in the roof within 4 feet (1220 mm) of the *fire wall*,
   3.2. The roof is covered with a minimum Class B roof covering, and
   3.3. The roof sheathing or deck is constructed of *fire-retardant-treated wood* for a distance of 4 feet (1220 mm) on both sides of the wall or the roof is protected with 5/8-inch (15.9 mm) Type X gypsum board directly beneath the underside of the roof sheathing or deck, supported by a minimum of 2-inch (51 mm) nominal ledgers attached to the sides of the roof framing members for a minimum distance of 4 feet (1220 mm) on both sides of the *fire wall.*

706.7 Combustible framing in fire walls. Adjacent combustible members entering into a concrete or masonry *fire wall* from opposite sides shall not have less than a 4-inch (102 mm) distance between embedded ends. Where combustible members frame into hollow walls or walls of hollow units, hollow spaces shall be solidly filled for the full thickness of the wall and for a distance not less than 4 inches (102 mm) above, below and between the structural members, with noncombustible materials *approved* for *fireblocking.*

706.8 Openings. Each opening through a *fire wall* shall be protected in accordance with Section 716 and shall not exceed 156 square feet (15 m^2). The aggregate width of openings at any floor level shall not exceed 25 percent of the length of the wall.

Exceptions:

1. Openings are not permitted in party walls constructed in accordance with Section 706.1.1.
2. Openings shall not be limited to 156 square feet (15 m^2) where both buildings are equipped throughout with an *automatic sprinkler system* installed in accordance with Section 903.3.1.1.

706.9 Penetrations. Penetrations of *fire walls* shall comply with Section 714.

706.10 Joints. Joints made in or between *fire walls* shall comply with Section 715.

706.11 Ducts and air transfer openings. Ducts and air transfer openings shall not penetrate *fire walls.*

Exception: Penetrations by ducts and air transfer openings of *fire walls* that are not on a *lot line* shall be allowed provided that the penetrations comply with Section 717. The size and aggregate width of all openings shall not exceed the limitations of Section 706.8.

SECTION 707
FIRE BARRIERS

707.1 General. *Fire barriers* installed as required elsewhere in this code or the *International Fire Code* shall comply with this section.

707.2 Materials. *Fire barriers* shall be of materials permitted by the building type of construction.

707.3 Fire-resistance rating. The *fire-resistance rating* of *fire barriers* shall comply with this section.

707.3.1 Shaft enclosures. The *fire-resistance rating* of the *fire barrier* separating building areas from a shaft shall comply with Section 713.4.

707.3.2 Interior exit stairway and ramp construction. The *fire-resistance rating* of the *fire barrier* separating building areas from an *interior exit stairway* or *ramp* shall comply with Section 1023.1.

707.3.3 Enclosures for exit access stairways. The *fire-resistance rating* of the *fire barrier* separating building areas from an *exit access stairway* or *ramp* shall comply with Section 713.4.

DRAFT

707.3.4 Exit passageway. The *fire-resistance rating* of the *fire barrier* separating building areas from an *exit* passageway shall comply with Section 1024.3.

707.3.5 Horizontal exit. The *fire-resistance rating* of the separation between building areas connected by a horizontal *exit* shall comply with Section 1026.1.

707.3.6 Atriums. The *fire-resistance rating* of the *fire barrier* separating atriums shall comply with Section 404.6.

707.3.7 Incidental uses. The *fire barrier* separating incidental uses from other spaces in the building shall have a *fire-resistance rating* of not less than that indicated in Table 509.

707.3.8 Control areas. *Fire barriers* separating *control areas* shall have a *fire-resistance rating* of not less than that required in Section 414.2.4.

707.3.9 Separated occupancies. Where the provisions of Section 508.4 are applicable, the *fire barrier* separating mixed occupancies shall have a *fire-resistance rating* of not less than that indicated in Table 508.4 based on the occupancies being separated.

707.3.10 Fire areas. The *fire barriers*, *fire walls* or *horizontal assemblies*, or combination thereof, separating a single occupancy into different *fire areas* shall have a *fire-resistance rating* of not less than that indicated in Table 707.3.10. The *fire barriers*, *fire walls* or *horizontal assemblies*, or combination thereof, separating *fire areas* of mixed occupancies shall have a *fire-resistance rating* of not less than the highest value indicated in Table 707.3.10 for the occupancies under consideration.

TABLE 707.3.10
FIRE-RESISTANCE RATING REQUIREMENTS FOR FIRE BARRIERS, FIRE WALLS OR HORIZONTAL ASSEMBLIES BETWEEN FIRE AREAS

OCCUPANCY GROUP	FIRE-RESISTANCE RATING (hours)
H-1, H-2	4
F-1, H-3, S-1	3
A, B, E, F-2, H-4, H-5, I, M, R, S-2	2
U	1

DRAFT

[W] 707.4 Exterior walls. Where exterior walls serve as a part of a required fire-resistance-rated shaft or ((~~stairway~~)) separation or ((~~ramp~~)) enclosure for a stairway, ramp or ((~~separation~~)) exit passageway, such walls shall comply with the requirements of Section 705 for exterior walls and the fire-resistance-rated enclosure or separation requirements shall not apply.

Exception: Exterior walls required to be *fire-resistance rated* in accordance with Section 1021 for exterior egress balconies, Section 1023.7 for interior exit stairways and ramps, Section 1024.8 for exit passageways and Section 1027.6 for exterior exit stairways and ramp.

[W] 707.5 Continuity. *Fire barriers* shall extend from the top of the foundation or floor/ceiling assembly below to the underside of the floor or roof sheathing, slab or deck above and shall be securely attached thereto. Such *fire barriers* shall be continuous through concealed space, such as the space above a suspended ceiling. Joints and voids at intersections shall comply with Sections 707.8 and 707.9

Exceptions:

1. Shaft enclosures shall be permitted to terminate at a top enclosure complying with Section 713.12.
2. *Interior exit stairway* and *ramp* enclosures required by Section 1023 and *exit access stairway* and *ramp* enclosures required by Section 1019 shall be permitted to terminate at a top enclosure complying with Section 713.12.
3. An exit passageway enclosure required by Section 1024.3 that does not extend to the underside of the roof sheathing, slab or deck above shall be enclosed at the top with construction of the same *fire-resistance rating* as required for the exit passageway.

707.5.1 Supporting construction. The supporting construction for a *fire barrier* shall be protected to afford the required *fire-resistance rating* of the *fire barrier* supported. Hollow vertical spaces within a *fire barrier* shall be fireblocked in accordance with Section 718.2 at every floor level.

Exceptions:

1. The maximum required *fire-resistance rating* for assemblies supporting *fire barriers* separating tank storage as provided for in Section 415.9.1.2 shall be 2 hours, but not less than required by Table 601 for the building construction type.
2. Supporting construction for 1-hour *fire barriers* required by Table 509 in buildings of Types IIB, IIIB and VB construction is not required to be *fire-resistance rated* unless required by other sections of this code.

707.6 Openings. Openings in a *fire barrier* shall be protected in accordance with Section 716. Openings shall be limited to a maximum aggregate width of 25 percent of the length of the wall, and the maximum area of any single opening shall not exceed 156 square feet (15 m^2). Openings in enclosures for *exit access stairways* and *ramps*, *interior exit stairways* and *ramps* and *exit passageways* shall also comply with Sections 1019, 1023.4 and 1024.5, respectively.

Exceptions:

1. Openings shall not be limited to 156 square feet (15 m^2) where adjoining floor areas are equipped throughout with an automatic sprinkler system in accordance with Section 903.3.1.1.
2. Openings shall not be limited to 156 square feet (15 m^2) or an aggregate width of 25 percent of the length of the wall where the opening protective is a *fire door* serving enclosures for exit access stairways and ramps, and interior exit stairways and ramps.
3. Openings shall not be limited to 156 square feet (15 m^2) or an aggregate width of 25 percent of the length of the wall where the opening protective has been tested in accordance with ASTM E119 or UL 263 and has a minimum *fire-resistance rating* not less than the *fire-resistance rating* of the wall.
4. Fire window assemblies permitted in atrium separation walls shall not be limited to a maximum aggregate width of 25 percent of the length of the wall.
5. Openings shall not be limited to 156 square feet (15 m^2) or an aggregate width of 25 percent of the length of the wall where the opening protective is a *fire door assembly* in a *fire barrier* separating an enclosure for *exit access* stairways and ramps, and interior exit stairways and ramps from an exit passageway in accordance with Section 1023.3.1.

707.7 Penetrations. Penetrations of *fire barriers* shall comply with Section 714.

707.7.1 Prohibited penetrations. Penetrations into enclosures for *exit access stairways* and *ramps*, *interior exit stairways* and *ramps*, and *exit passageways* shall be allowed only where permitted by Sections 1019, 1023.5 and 1024.6, respectively.

707.8 Joints. Joints made in or between *fire barriers*, and joints made at the intersection of *fire barriers* with underside of a fire-resistance-rated floor or roof sheathing, slab or deck above, and the exterior vertical wall intersection shall comply with Section 715.

707.9 Voids at intersections. The voids created at the intersection of a *fire barrier* and a nonfire-resistance-rated roof assembly or a nonfire-resistance-rated exterior wall assembly shall be filled. An approved material or system shall be used to fill the void, and shall be securely installed in or on the intersection for its entire length so as not to dislodge, loosen or otherwise impair its ability to accommodate expected building movements and to retard the passage of fire and hot gases.

707.10 Ducts and air transfer openings. Penetrations in a *fire barrier* by ducts and air transfer openings shall comply with Section 717.

DRAFT

SECTION 708
FIRE PARTITIONS

[S] 708.1 General. The following wall assemblies shall comply with this section.

1. Separation walls as required by Section 420.2 for Group I-1 and Group R occupancies.
2. Walls separating tenant spaces in *covered and open mall buildings* as required by Section 402.4.2.1.
3. Corridor walls as required by Section 1020.1.
4. Enclosed elevator lobby separation as required by Section ((~~3006.2~~)) 713.14.
5. Egress balconies as required by Section 1021.2
6. Elevator machine rooms and elevator control rooms as required by Section 3020.4 and Table 509.

708.2 Materials. The walls shall be of materials permitted by the building type of construction.

708.3 Fire-resistance rating. *Fire partitions* shall have a *fire-resistance rating* of not less than 1 hour.

Exceptions:

1. Corridor walls permitted to have a 1/2-hour *fire-resistance rating* by Table 1020.1.
2. *Dwelling unit* and *sleeping unit* separations in buildings of Types IIB, IIIB and VB construction shall have *fire-resistance ratings* of not less than 1/2 hour in buildings equipped throughout with an *automatic sprinkler system* in accordance with Section 903.3.1.1.

[S] 708.4 Continuity. *Fire partitions* shall extend from the top of the foundation or floor/ceiling assembly below and be securely attached to one of the following:

1. The underside of the floor or roof sheathing, deck or slab above.

2. The underside of a floor/ceiling or roof/ceiling assembly having a fire-resistance rating that is not less than the *fire-resistance rating* of the *fire partition*.

Exceptions:

1. *Fire partitions* shall not be required to extend into a crawl space below where the floor above the crawl space has a minimum 1-hour *fire-resistance rating*.
2. *Fire partitions* serving as a corridor wall shall not be required to extend above the lower membrane of a corridor ceiling provided that the corridor ceiling membrane is equivalent to corridor wall membrane, and either of the following conditions is met:
   - 2.1. The room-side membrane of the corridor wall extends to the underside of the floor or roof sheathing, deck or slab of a fire-resistance-rated floor or roof above.
   - 2.2. The building is equipped with an automatic sprinkler system installed throughout in accordance with Section 903.3.1.1 or 903.3.1.2, including automatic sprinklers installed in the space between the top of the *fire partition* and underside of the floor or roof sheathing, deck or slab above.
3. *Fire partitions* serving as a corridor wall shall be permitted to terminate at the upper membrane of the corridor ceiling assembly where the corridor ceiling is constructed as required for the corridor wall.
4. *Fire partitions* separating tenant spaces in a covered or open mall building complying with Section 402.4.2.1 shall not be required to extend above the underside of a ceiling. Such ceiling shall not be required to be part of a fire-resistance-rated assembly, and the attic or space above the ceiling at tenant separation walls shall not be required to be subdivided by *fire partitions*.

708.4.1 Supporting construction. The supporting construction for a *fire partition* shall have a *fire-resistance rating* that is equal to or greater than the required fire-resistance rating of the supported *fire partition*.

Exception: In buildings of Types IIB, IIIB and VB construction, the supporting construction requirement shall not apply to *fire partitions* separating tenant spaces in covered and open mall buildings, *fire partitions* separating dwelling units, *fire partitions* separating sleeping units**.** ((~~and~~)) *fire partitions* serving as corridor walls and walls enclosing elevator machine rooms and elevator control rooms.

708.4.2 Fireblocks and draftstops in combustible construction. In combustible construction where *fire partitions* do not extend to the underside of the floor or roof sheathing, deck or slab above, the space above and along the line of the *fire partition* shall be provided with one of the following: **

1. *Fireblocking* up to the underside of the floor or roof sheathing, deck or slab above using materials complying with Section 718.2.1.
2. Draftstopping up to the underside of the floor or roof sheathing, deck or slab above using materials complying with Section 718.3.1 for floors or Section 718.4.1 for attics.

Exceptions:

1. Buildings equipped with an automatic sprinkler system installed throughout in accordance with Section 903.3.1.1, or in accordance with Section 903.3.1.2 provided that protection is provided in the space between the top of the *fire partition* and underside of the floor or roof sheathing, deck or slab above as required for systems complying with Section 903.3.1.1.
2. Where corridor walls provide a sleeping unit or dwelling unit separation, draftstopping shall only be required above one of the corridor walls.
3. In Group R-2 occupancies with fewer than four dwelling units, *fireblocking* and draftstopping shall not be required.
4. In Group R-2 occupancies up to and including four stories in height in buildings not exceeding 60 feet (18 288 mm) in height above grade plane, the attic space shall be subdivided by *draftstops* into areas not exceeding 3,000 square feet (279 m^2) or above every two dwelling units, whichever is smaller.
5. In Group R-3 occupancies with fewer than three dwelling units, fire-blocking and draftstopping shall not be required in floor assemblies.

708.5 Exterior walls. Where *exterior walls* serve as a part of a required fire-resistance-rated separation, such walls shall comply with the requirements of Section 705 for *exterior walls*, and the fire-resistance-rated separation requirements shall not apply.

Exception: Exterior walls required to be fire-resistance rated in accordance with Section 1021.2 for exterior egress balconies, Section 1023.7 for interior exit stairways and ramps and Section 1027.6 for exterior exit stairways and ramps.

708.6 Openings. Openings in a *fire partition* shall be protected in accordance with Section 716.

708.7 Penetrations. Penetrations of *fire partitions* shall comply with Section 714.

708.8 Joints. Joints made in or between *fire partitions* shall comply with Section 715.

DRAFT

708.9 Ducts and air transfer openings. Penetrations in a *fire partition* by ducts and air transfer openings shall comply with Section 717.

SECTION 709
SMOKE BARRIERS

709.1 General. Vertical and horizontal *smoke barriers* shall comply with this section.

709.2 Materials. *Smoke barriers* shall be of materials permitted by the building type of construction.

709.3 Fire-resistance rating. A 1-hour *fire-resistance rating* is required for *smoke barriers*.

Exception: *Smoke barriers* constructed of minimum 0.10-inch-thick (2.5 mm) steel in Group I-3 buildings.

[S] 709.4 Continuity. *Smoke barriers* shall form an effective membrane continuous from the top of the foundation or floor/ceiling assembly below to the underside of the floor or roof sheathing, deck or slab above, including continuity through concealed spaces, such as those found above suspended ceilings, and interstitial structural and mechanical spaces. The supporting construction shall be protected to afford the required *fire-resistance rating* of the wall or floor supported in buildings of other than Type IIB, IIIB or VB construction. *Smoke barrier* walls used to separate *smoke compartments* shall comply with Section 709.4.1. *Smoke-barrier* walls used to enclose areas of refuge in accordance with Section 1009.6.4 or to enclose elevator lobbies in accordance with Section 403.6.1.5, 403.6.2.6 or 405.4.3 ((~~, 3007.6.2, or 3008.6.2~~)) shall comply with Section 709.4.2.

Exception: *Smoke-barrier* walls are not required in interstitial spaces where such spaces are designed and constructed with ceilings or *exterior walls* that provide resistance to the passage of fire and smoke equivalent to that provided by the *smoke-barrier* walls.

709.4.1 Smoke-barrier walls separating smoke compartments. *Smoke-barrier* walls used to separate *smoke compartments* shall form an effective membrane continuous from outside wall to outside wall.

709.4.2 Smoke-barrier walls enclosing areas of refuge or elevator lobbies. *Smoke-barrier* walls used to enclose areas of refuge in accordance with Section 1009.6.4, or to enclose elevator lobbies in accordance with Section 403.6.1.5, 403.6.2.6 or 405.4.3, ((~~3007.6.2, or 3008.6.2,~~)) shall form an effective membrane enclosure that terminates at a *fire barrier* wall having a level of *fire protection rating* not less than 1 hour, another *smoke barrier* wall or an outside wall. A smoke and draft control door assembly as specified in Section 716.2.2.1.1 shall not be required at each elevator hoistway door opening or at each exit doorway between an area of refuge and the exit enclosure.

709.5 Openings. Openings in a *smoke barrier* shall be protected in accordance with Section 716.

Exceptions:

1. In Group I-1, Condition 2, Group I-2 and *ambulatory care facilities*, where a pair of opposite-swinging doors are installed across a corridor in accordance with Section 709.5.1, the doors shall not be required to be protected in accordance with Section 716. The doors shall be close fitting within operational tolerances, and shall not have a center mullion or undercuts in excess of 3/4 inch (19.1 mm), louvers or grilles. The doors shall have head and jamb stops, and astragals or rabbets at meeting edges. Where permitted by the door manufacturer's listing, positive-latching devices are not required. Factory-applied or field-applied protective plates are not required to be labeled.
2. In Group I-1, Condition 2, Group I-2 and *ambulatory care facilities*, special purpose horizontal sliding, accordion or folding doors installed in accordance with Section 1010.1.4.3 and protected in accordance with Section 716.

709.5.1 Group I-2 and ambulatory care facilities. In Group I-2 and ambulatory care facilities, where doors protecting openings in *smoke barriers* are installed across a corridor and have hold-open devices, the doors shall be automatic-closing in accordance with Section 716.2.6.6. Such doors shall have a vision panel with fire-protection-rated glazing materials in fire-protection-rated frames, the area of which shall not exceed that tested.

709.6 Penetrations. Penetrations of *smoke barriers* shall comply with Section 714.

709.7 Joints. Joints made in or between *smoke barriers* shall comply with Section 715.

709.8 Ducts and air transfer openings. Penetrations in a *smoke barrier* by ducts and air transfer openings shall comply with Section 717.

SECTION 710
SMOKE PARTITIONS

710.1 General. Smoke partitions installed as required elsewhere in the code shall comply with this section.

710.2 Materials. The walls shall be of materials permitted by the building type of construction.

710.3 Fire-resistance rating. Unless required elsewhere in the code, smoke partitions are not required to have a *fire-resistance rating*.

DRAFT

Exception: *Horizontal assemblies* separating *dwelling units* and *sleeping units* shall be not less than 1/2-hour fire-resistance-rated construction in a building of Types IIB, IIIB and VB construction, where the building is equipped throughout with an *automatic sprinkler system* in accordance with Section 903.3.1.1.

711.2.4.4 Separating smoke compartments. Where the *horizontal assembly* is required to be a *smoke barrier*, the assembly shall comply with Section 709.

711.2.4.5 Separating incidental uses. Where the *horizontal assembly* separates incidental uses from the remainder of the building, the assembly shall have a *fire-resistance rating* of not less than that required by Section 509.

711.2.4.6 Other separations. Where a *horizontal assembly* is required by other sections of this code, the assembly shall have a *fire-resistance rating* of not less than that required by that section.

711.2.5 Ceiling panels. Where the weight of lay-in ceiling panels, used as part of fire-resistance-rated floor/ceiling or roof/ceiling assemblies, is not adequate to resist an upward force of 1 pound per square foot (48 Pa), wire or other *approved* devices shall be installed above the panels to prevent vertical displacement under such upward force.

711.2.6 Unusable space. In 1-hour fire-resistance-rated floor/ceiling assemblies, the ceiling membrane is not required to be installed over unusable crawl spaces. In 1-hour fire-resistance-rated roof assemblies, the floor membrane is not required to be installed where unusable *attic* space occurs above.

711.3 Nonfire-resistance-rated floor and roof assemblies. Nonfire-resistance-rated floor, floor/ceiling, roof and roof/ceiling assemblies shall comply with Sections 711.3.1 and 711.3.2.

711.3.1 Materials. Assemblies shall be of materials permitted by the building type of construction.

711.3.2 Continuity. Assemblies shall be continuous without vertical openings, except as permitted by Section 712.

SECTION 712
VERTICAL OPENINGS

[S] 712.1 General. Each vertical opening shall comply in accordance with one of the protection methods in Sections 712.1.1 through ((~~712.1.16~~)) 712.1.17.

712.1.1 Shaft enclosures. Vertical openings contained entirely within a shaft enclosure complying with Section 713 shall be permitted. Elevator hoistways shall be protected in accordance with Section 713.14.2.

712.1.2 Individual dwelling unit. Unconcealed vertical openings totally within an individual residential dwelling unit and connecting four stories or less shall be permitted.

712.1.3 Escalator openings. Where a building is equipped throughout with an *automatic sprinkler system* in accordance with Section 903.3.1.1, vertical openings for escalators shall be permitted where protected in accordance with Section 712.1.3.1 or 712.1.3.2.

712.1.3.1 Opening size. Protection by a draft curtain and closely spaced sprinklers in accordance with NFPA 13 shall be permitted where the area of the vertical opening between stories does not exceed twice the horizontal projected area of the escalator. In other than Groups B and M, this application is limited to openings that do not connect more than four stories.

Note: NFPA 13 requires draft curtains to be at least 18 inches (457 mm) deep, and to be of noncombustible or limited-combustible material.

712.1.3.2 Automatic shutters. Protection of the vertical opening by approved shutters at every penetrated floor shall be permitted in accordance with this section. The shutters shall be of noncombustible construction and have a *fire-resistance rating* of not less than 1.5 hours. The shutter shall be so constructed as to close immediately upon the actuation of a smoke detector installed in accordance with Section 907.3.1 and shall completely shut off the well opening. Escalators shall cease operation when the shutter begins to close. The shutter shall operate at a speed of not more than 30 feet per minute (152.4 mm/s) and shall be equipped with a sensitive leading edge to arrest its progress where in contact with any obstacle, and to continue its progress on release therefrom.

712.1.4 Penetrations. Penetrations, concealed and unconcealed, shall be permitted where protected in accordance with Section 714.

712.1.5 Joints. Joints shall be permitted where complying with Section 712.1.5.1 or 712.1.5.2, as applicable.

712.1.5.1 Joints in or between horizontal assemblies. Joints made in or between *horizontal assemblies* shall comply with Section 715. The void created at the intersection of a floor/ceiling assembly and an exterior curtain wall assembly shall be permitted where protected in accordance with Section 715.4.

712.1.5.2 Joints in or between nonfire-resistance-rated floor assemblies. Joints in or between floor assemblies without a required *fire-resistance rating* shall be permitted where they comply with one of the following:

1. The joint shall be concealed within the cavity of a wall.

DRAFT

2. The joint shall be located above a ceiling.
3. The joint shall be sealed, treated or covered with an *approved* material or system to resist the free passage of flame and the products of combustion.

Exception: Joints meeting one of the exceptions listed in Section 715.1.

712.1.6 Ducts and air transfer openings. Penetrations by ducts and air transfer openings shall be protected in accordance with Section 717. Grease ducts shall be protected in accordance with the *International Mechanical Code*.

712.1.7 Atriums. In other than Group H occupancies, atriums complying with Section 404 shall be permitted.

712.1.8 Masonry chimney. Approved vertical openings for masonry chimneys shall be permitted where the *annular space* is fireblocked at each floor level in accordance with Section 718.2.5.

712.1.9 Two-story openings. In other than Groups I-2 and I-3, a vertical opening that is not used as one of the applications listed in this section shall be permitted if the opening complies with all of the following items:

1. Does not connect more than two stories.
2. Does not penetrate a horizontal assembly that separates fire areas or *smoke barriers* that separate *smoke compartments*.
3. Is not concealed within the construction of a wall or a floor/ceiling assembly.
4. Is not open to a corridor in Group I and R occupancies.
5. Is not open to a corridor on nonsprinklered floors.
6. Is separated from floor openings and air transfer openings serving other floors by construction conforming to required shaft enclosures.

712.1.10 Parking garages. Vertical openings in parking garages for automobile ramps, elevators and duct systems shall comply with Section 712.1.10.1, 712.1.10.2 or 712.1.10.3, as applicable.

712.1.10.1 Automobile ramps. Vertical openings for automobile ramps in parking garages shall be permitted where constructed in accordance with Sections 406.5 and 406.6.

712.1.10.2 Elevators. ((~~Vertical~~)) Non-fire-resistance rated vertical openings for elevator hoistways in parking garages that serve only the parking garage, and complying with Sections 406.5 and 406.6 ((~~, respectively,~~)) shall be permitted.

Note: When Section 712.1.10.2 is applied, the hoistway will be required to be enclosed, but it is not required to be fire-resistance rated. See Section 3020.1.

712.1.10.3 Duct systems. Vertical openings for mechanical exhaust or supply duct systems in parking garages complying with Sections 406.5 and 406.6 ((~~, respectively,~~)) shall be permitted to be unenclosed where such duct system is contained within and serves only the parking garage.

712.1.11 Mezzanine. Vertical openings between a mezzanine complying with Section 505 and the floor below shall be permitted.

712.1.12 Exit access stairways and ramps. Vertical openings containing *exit access stairways* or *ramps* in accordance with Section 1019 shall be permitted.

712.1.13 Openings. Vertical openings for floor fire doors and access doors shall be permitted where protected by Section 712.1.13.1 or 712.1.13.2.

712.1.13.1 Horizontal fire door assemblies. Horizontal *fire door* assemblies used to protect openings in fire-resistance-rated *horizontal assemblies* shall be tested in accordance with NFPA 288, and shall achieve a *fire-resistance rating* not less than the assembly being penetrated. Horizontal *fire door* assemblies shall be labeled by an *approved agency*. The *label* shall be permanently affixed and shall specify the manufacturer, the test standard and the *fire-resistance rating*.

712.1.13.2 Access doors. Access doors shall be permitted in ceilings of fire-resistance-rated floor/ceiling and roof/ceiling assemblies, provided that such doors are tested in accordance with ASTM E119 or UL 263 as horizontal assemblies and labeled by an approved agency for such purpose.

712.1.14 Group I-3. In Group I-3 occupancies, vertical openings shall be permitted in accordance with Section 408.5.

712.1.15 Skylights. Skylights and other penetrations through a fire-resistance-rated roof deck or slab are permitted to be unprotected, provided that the structural integrity of the fire-resistance-rated roof assembly is maintained. Unprotected skylights shall not be permitted in roof assemblies required to be fire-resistance rated in accordance with Section 705.8.6. The supporting construction shall be protected to afford the required *fire-resistance rating* of the *horizontal assembly* supported.

712.1.16 Gas vents and piping. Vertical openings for penetrations of floors inside a wall cavity by gas vents and piping in buildings of Types III, IV, and V construction shall be permitted.

DRAFT

((~~712.1.16~~)) 712.1.17 Openings otherwise permitted. Vertical openings shall be permitted where allowed by other sections of this code.

SECTION 713
SHAFT ENCLOSURES

713.1 General. The provisions of this section shall apply to shafts required to protect openings and penetrations through floor/ceiling and roof/ceiling assemblies. *Interior exit stairways* and *ramps* shall be enclosed in accordance with Section 1023.

713.2 Construction. Shaft enclosures shall be constructed as *fire barriers* in accordance with Section 707 or horizontal assemblies in accordance with Section 711, or both.

713.3 Materials. The shaft enclosure shall be of materials permitted by the building type of construction.

[S] 713.4 Fire-resistance rating. Shaft enclosures shall have a *fire-resistance rating* of not less than 2 hours where connecting more than four *stories*, ((~~or more,~~)) and not less than 1 hour where connecting ((~~less than~~)) four and fewer *stories*. The number of *stories* connected by the shaft enclosure shall include any basements but not any *mezzanines*. Shaft enclosures shall have a *fire-resistance rating* not less than the floor assembly penetrated, but need not exceed 2 hours. Shaft enclosures shall meet the requirements of Section 703.2.1.

713.5 Continuity. Shaft enclosures shall be constructed as *fire barriers* in accordance with Section 707 or *horizontal assemblies* constructed in accordance with Section 711, or both, and shall have continuity in accordance with Section 707.5 for *fire barriers* or Section 711.2.2 for *horizontal assemblies*, as applicable.

713.6 Exterior walls. Where *exterior walls* serve as a part of a required shaft enclosure, such walls shall comply with the requirements of Section 705 for *exterior walls* and the fire-resistance-rated enclosure requirements shall not apply.

Exception: Exterior walls required to be fire-resistance rated in accordance with Section 1021.2 for exterior egress balconies, Section 1023.7 for interior *exit* stairways and ramps and Section 1027.6 for exterior *exit* stairways and ramps.

713.7 Openings. Openings in a shaft enclosure shall be protected in accordance with Section 716 as required for *fire barriers*. Doors shall be self- or automatic-closing by smoke detection in accordance with Section 716.2.6.6.

713.7.1 Prohibited openings. Openings other than those necessary for the purpose of the shaft shall not be permitted in shaft enclosures.

[S] 713.8 Penetrations. Penetrations in a shaft enclosure shall be protected in accordance with Section 714 as required for *fire barriers*. Structural elements, such as beams or joists, where protected in accordance with Section 714 shall be permitted to penetrate a shaft enclosure. See Section 3022 for installation of pipes and ducts in elevator hoistways.

713.8.1 Prohibited penetrations. Penetrations other than those necessary for the purpose of the shaft shall not be permitted in shaft enclosures.

Exception: *Membrane penetrations* shall be permitted on the outside of shaft enclosures. Such penetrations shall be protected in accordance with Section 714.4.2.

713.9 Joints. Joints in a shaft enclosure shall comply with Section 715.

713.10 Duct and air transfer openings. Penetrations of a shaft enclosure by ducts and air transfer openings shall comply with Section 717.

713.11 Enclosure at the bottom. Shafts that do not extend to the bottom of the building or structure shall comply with one of the following:

1. They shall be enclosed at the lowest level with construction of the same *fire-resistance rating* as the lowest floor through which the shaft passes, but not less than the rating required for the shaft enclosure.
2. They shall terminate in a room having a use related to the purpose of the shaft. The room shall be separated from the remainder of the building by *fire barriers* constructed in accordance with Section 707 or *horizontal assemblies* constructed in accordance with Section 711, or both. The *fire-resistance rating* and opening protectives shall be not less than the protection required for the shaft enclosure.
3. They shall be protected by *approved fire dampers* installed in accordance with their listing at the lowest floor level within the shaft enclosure.

Exceptions:

1. The fire-resistance-rated room separation is not required, provided that the only openings in or penetrations of the shaft enclosure to the interior of the building occur at the bottom. The bottom of the shaft shall be closed off around the penetrating items with materials permitted by Section 718.3.1 for draftstopping, or the room shall be provided with an *approved automatic sprinkler system*.

DRAFT

2. A shaft enclosure containing a waste or linen chute shall not be used for any other purpose and shall discharge in a room protected in accordance with Section 713.13.4.
3. The fire-resistance-rated room separation and the protection at the bottom of the shaft are not required provided that there are no combustibles in the shaft and there are no openings or other penetrations through the shaft enclosure to the interior of the building.

713.12 Enclosure at top. A shaft enclosure that does not extend to the underside of the roof sheathing, deck or slab of the building shall be enclosed at the top with construction of the same *fire-resistance rating* as the topmost floor penetrated by the shaft, but not less than the *fire-resistance rating* required for the shaft enclosure.

713.13 Waste and linen chutes and incinerator rooms. Waste and linen chutes shall comply with the provisions of NFPA 82, Chapter 6 and shall meet the requirements of Sections 712 and 713.13.1 through 713.13.6. Incinerator rooms shall meet the provisions of Sections 713.13.4 through 713.13.5.

Exception: Chutes serving and contained within a single dwelling unit.

713.13.1 Waste and linen. A shaft enclosure containing a recycling, or waste or linen chute shall not be used for any other purpose and shall be enclosed in accordance with Section 713.4. A shaft enclosure shall be permitted to contain recycling and waste chutes. Openings into the shaft, from access rooms and discharge rooms, shall be protected in accordance with this section and Section 716. Openings into chutes shall not be located in *corridors*. Doors into chutes shall be self-closing. Discharge doors shall be self- or automatic-closing upon the actuation of a smoke detector in accordance with Section 716.2.6.6, except that heat-activated closing devices shall be permitted between the shaft and the discharge room.

713.13.2 Materials. A shaft enclosure containing a waste, recycling, or linen chute shall be constructed of materials as permitted by the building type of construction.

713.13.3 Chute access rooms. Access openings for waste or linen chutes shall be located in rooms or compartments enclosed by not less than 1-hour *fire barriers* constructed in accordance with Section 707 or *horizontal assemblies* constructed in accordance with Section 711, or both. Openings into the access rooms shall be protected by opening protectives having a *fire protection rating* of not less than 3/4 hour. Doors shall be self- or automatic-closing upon the detection of smoke in accordance with Section 716.2.6.6. The room or compartment shall be configured to allow the access door to the room or compartment to close and latch with the access panel to the refuse or laundry chute in any position.

[W] 713.13.4 Chute discharge room. Waste or linen chutes shall discharge into an enclosed room separated by *fire barriers* with a *fire-resistance rating* not less than the required fire rating of the shaft enclosure and constructed in accordance with Section 707 or *horizontal assemblies* constructed in accordance with Section 711, or both. Openings into the discharge room from the remainder of the building shall be protected by opening protectives having a *fire protection rating* equal to the protection required for the shaft enclosure. Through penetrations of piping and conduit not necessary for the purpose of the of the chute discharge room are permitted as long as they are protected per 714 and do not impact the operation of the trash collection system. Doors shall be self- or automatic-closing upon the detection of smoke in accordance with Section 716.2.6.6. Waste chutes shall not terminate in an incinerator room. Waste and linen rooms that are not provided with chutes need only comply with Table 509.

713.13.5 Incinerator room. Incinerator rooms shall comply with Table 509.

713.13.6 Automatic sprinkler system. An *approved automatic sprinkler system* shall be installed in accordance with Section 903.2.11.2.

[W] 713.13.7 Chute venting and roof termination. The full diameter of waste and linen chutes shall extend a minimum of 3 feet (0.92 m) above the building roof and be gravity vented per *International Mechanical Code* Section 515.

EXCEPTIONS:

1. Where mechanically ventilated per *International Mechanical Code* Section 515 the full diameter of the chute shall extend through the roof a minimum of 3 feet (0.92 m) and terminate at a blast cap. The mechanical exhaust connection shall tap into the side of the blast cap extension above the roof.
2. Where the trash chute does not extend to the upper floor of the building below the roof the trash chute shall be permitted to gravity vent to a sidewall louver termination. The horizontal extension of the trash chute shall be the full diameter of the chute and shall be enclosed in rated construction equal to the rating of the shaft enclosure. Where the chute is mechanically ventilated per *International Mechanical Code* Section 515 the blast cap shall terminate behind the louver and the exhaust fan and duct connection will be enclosed in the rated shaft.

[S] 713.14 Elevator, dumbwaiter and other hoistways. Elevator, dumbwaiter and other hoistway enclosures shall be constructed in accordance with ((~~Sections 712 and 713, and Chapter 30~~)) this section.

713.14.1 General. Elevator hoistway openings and enclosed elevator lobbies shall be provided in accordance with the following:

DRAFT

1. Where hoistway opening protection is required by Section 713.14.2, such protection shall be in accordance with Section 713.14.3.
2. Where enclosed elevator lobbies are required for underground buildings, such lobbies shall comply with Section 405.4.3.
3. Where an area of refuge is required and an enclosed elevator lobby is provided to serve as an area of refuge, the enclosed elevator lobby shall comply with Section 1009.6.
4. Where fire service access elevators are provided, enclosed elevator lobbies shall comply with Section 403.6.1.5.
5. Where occupant evacuation elevators are provided, enclosed elevator lobbies shall comply with Section 403.6.2.6.

Exception: Elevators in parking garages are permitted to comply with 712.1.9.

713.14.2 Hoistway opening protection required. Elevator hoistway door openings shall be protected in accordance with Section 713.14.3 where an elevator hoistway connects more than three *stories*, is required to be enclosed within a shaft enclosure in accordance with Section 712.1.1, and any of the following conditions apply:

1. The building is not protected throughout with an *automatic sprinkler system* in accordance with Section 903.3.1.1 or 903.3.1.2.
2. The building contains a Group I-1 Condition 2 occupancy.
3. The building contains a Group I-2 occupancy.
4. The building contains a Group I-3 occupancy.
5. The building is a high rise and the elevator hoistway is more than 75 feet (22 860 mm) in height. The height of the hoistway shall be measured from the lowest floor to the highest floor of the floors served by the hoistway.

   Exceptions:

   1. Protection of elevator hoistway door openings is not required where the elevator serves only open parking garages in accordance with Section 406.5.
   2. Protection of elevator hoistway door openings is not required at the level(s) of exit discharge, provided the level(s) of exit discharge is equipped with an *automatic sprinkler system* in accordance with Section 903.3.1.1.
   3. Enclosed elevator lobbies and protection of elevator hoistway door openings are not required on levels where the elevator hoistway opens to the exterior.

713.14.2.1 Rated corridors. Where *corridors* are required to be fire resistance rated in accordance with Section 1020.1, elevator hoistway openings shall be protected in accordance with Section 713.14.3.

713.14.3 Hoistway opening protection. Where Section 713.14.2 requires protection of the elevator hoistway door opening, the protection shall be provided by one of the following:

1. An enclosed elevator lobby shall be provided at each floor to separate the elevator hoistway shaft enclosure doors from each floor by fire partitions in accordance with Section 708. In addition, doors protecting openings in the elevator lobby enclosure walls shall comply with Section 716.5.3 as required for *corridor* walls and shall be automatic-closing by actuation of a smoke detector in accordance with Section 716.5.9.3. Penetrations of the enclosed elevator lobby by ducts and air transfer openings shall be protected as required for *corridors* in accordance with Section 717.5.4.1.
2. An enclosed elevator lobby shall be provided at each floor to separate the elevator hoistway shaft enclosure doors from each floor by smoke partitions in accordance with Section 710 where the building is equipped throughout with an *automatic sprinkler system* installed in accordance with Section 903.3.1.1 or 903.3.1.2. In addition, doors protecting openings in the smoke partitions shall comply with Sections 710.5.2.2, 710.5.2.3 and 716.5.9. Penetrations of the enclosed elevator lobby by ducts and air transfer openings shall be protected as required for *corridors* in accordance with Section 717.5.4.1.
3. Additional doors shall be provided at each elevator hoistway door opening at the point of access to the elevator car. Such door shall comply with the smoke and draft control door assembly requirements in Section 716.5.3.1 when tested in accordance with UL 1784 without an artificial bottom seal. They shall be maintained automatic closing by actuation of a smoke detector in accordance with Section 716.5.9.3. Doors that latch shall be provide with panic hardware, openable from inside the elevator car. The doors shall be readily openable from the car side without a key, tool, or special knowledge or effort.
4. The elevator hoistway shall be pressurized in accordance with Section 909.21.

713.14.4 Means of egress. Elevator lobbies shall be provided with at least one means of egress complying with Chapter 10 and other provisions in this code. Egress through an elevator lobby shall be permitted in accordance with Item 1 of Section 1016.2.

DRAFT

[S] 713.15 Chimneys and fireplaces. *Approved* factory-built chimneys shall be installed within shafts as required by Section 713.

Exception: Factory-built chimneys that are exposed to the exterior in an *approved* manner are not required to be installed in shafts.

Approved chimneys serving multiple *dwelling units* are permitted to be installed within the same shaft, provided *approved* metal draft stops are installed at each floor level. All combustible construction shall be protected as required for *fire-resistance-rated* shaft construction. Interior shaft wall joints shall be fire-taped where required and where space allows, but fire-taping is permitted to be omitted from joints on the final closure wall provided the joints are installed in a tight manner.

The back of listed manufactured fireplace boxes is permitted to replace that portion of the shaft wall where they are located, provided the joint between the box and the adjacent shaft wall is tightly constructed and installed according to manufacturer's specification. Fresh air make-up ducts required by the Energy or Mechanical codes are permitted to penetrate the shaft at the fire box. Fresh air make-up ducts which pass through any portion of the building other than the shaft shall be at least 26 gage metal.

SECTION 714
PENETRATIONS

714.1 Scope. The provisions of this section shall govern the materials and methods of construction used to protect *through penetrations* and *membrane penetrations* of *horizontal assemblies* and fire-resistance-rated wall assemblies.

714.1.1 Ducts and air transfer openings. Penetrations of fire-resistance-rated walls by ducts that are not protected with *dampers* shall comply with Sections 714.3 through 714.4.3. Penetrations of *horizontal assemblies* not protected with a shaft as permitted by Section 717.6, and not required to be protected with *fire dampers* by other sections of this code, shall comply with Sections 714.5 through 714.6.2. Ducts and air transfer openings that are protected with *dampers* shall comply with Section 717.

714.2 Installation. A listed *penetration firestop* system shall be installed in accordance with the manufacturer's installation instructions and the listing criteria.

714.3 Installation details. Where sleeves are used, they shall be securely fastened to the assembly penetrated. The space between the item contained in the sleeve and the sleeve itself and any space between the sleeve and the assembly penetrated shall be protected in accordance with this section. Insulation and coverings on or in the penetrating item shall not penetrate the assembly unless the specific material used has been tested as part of the assembly in accordance with this section.

[S] 714.4 Fire-resistance-rated walls. Penetrations into or through *fire walls*, *fire barriers*, *smoke barrier* walls and *fire partitions* shall comply with Sections 714.4.1 through 714.4.3. Penetrations in *smoke barrier* walls shall also comply with Section 714.5.4.

714.4.1 Through penetrations. *Through penetrations* of fire-resistance-rated walls shall comply with Section 714.4.1.1 or 714.4.1.2.

Exception: Where the penetrating items are steel, ferrous or copper pipes, tubes or conduits, the *annular space* between the penetrating item and the fire-resistance-rated wall is permitted to be protected by either of the following measures:

1. In concrete or masonry walls where the penetrating item is a maximum 6-inch (152 mm) nominal diameter and the area of the opening through the wall does not exceed 144 square inches (0.0929 m^2), concrete, grout or mortar is permitted where installed the full thickness of the wall or the thickness required to maintain the *fire-resistance rating*.
2. The material used to fill the *annular space* shall prevent the passage of flame and hot gases sufficient to ignite cotton waste when subjected to ASTM E119 or UL 263 time-temperature fire conditions under a minimum positive pressure differential of 0.01 inch (2.49 Pa) of water at the location of the penetration for the time period equivalent to the *fire-resistance rating* of the construction penetrated.

714.4.1.1 Fire-resistance-rated assemblies. *Through penetrations* shall be protected using systems installed as tested in the *approved* fire-resistance-rated assembly.

714.4.1.2 Through-penetration firestop system. *Through penetrations* shall be protected by an *approved penetration firestop* system installed as tested in accordance with ASTM E814 or UL 1479, with a minimum positive pressure differential of 0.01 inch (2.49 Pa) of water and shall have an *F rating* of not less than the required *fire-resistance rating* of the wall penetrated.

714.4.2 Membrane penetrations. *Membrane penetrations* shall comply with Section 714.4.1. Where walls or partitions are required to have a *fire-resistance rating*, recessed fixtures shall be installed such that the required *fire resistance* will not be reduced.

DRAFT

Exceptions:

1. *Membrane penetrations* of maximum 2-hour fire-resistance-rated walls and partitions by steel electrical boxes that do not exceed 16 square inches (0.0 103 m^2) in area, provided that the aggregate area of the openings through the membrane does not exceed 100 square inches (0.0645 m^2) in any 100 square feet (9.29 m^2) of wall area. The *annular space* between the wall membrane and the box shall not exceed 1/8 inch (3.2 mm). Such boxes on opposite sides of the wall or partition shall be separated by one of the following:
   1.1. By a horizontal distance of not less than 24 inches (610 mm) where the wall or partition is constructed with individual noncommunicating stud cavities.
   1.2. By a horizontal distance of not less than the depth of the wall cavity where the wall cavity is filled with cellulose loose-fill, rockwool or slag *mineral wool* insulation.
   1.3. By solid *fireblocking* in accordance with Section 718.2.1.
   1.4. By protecting both outlet boxes with *listed* putty pads.
   1.5. By other *listed* materials and methods.
2. *Membrane penetrations* by *listed* electrical boxes of any material, provided that such boxes have been tested for use in fire-resistance-rated assemblies and are installed in accordance with the instructions included in the listing. The *annular space* between the wall membrane and the box shall not exceed 1/8 inch (3.2 mm) unless *listed* otherwise. Such boxes on opposite sides of the wall or partition shall be separated by one of the following:
   2.1. By the horizontal distance specified in the listing of the electrical boxes.
   2.2. By solid *fireblocking* in accordance with Section 718.2.1.
   2.3. By protecting both boxes with *listed* putty pads.
   2.4. By other *listed* materials and methods.
3. *Membrane penetrations* by electrical boxes of any size or type, that have been *listed* as part of a wall opening protective material system for use in fire-resistance-rated assemblies and are installed in accordance with the instructions included in the listing.
4. *Membrane penetrations* by boxes other than electrical boxes, provided that such penetrating items and the *annular space* between the wall membrane and the box, are protected by an *approved membrane penetration firestop system* installed as tested in accordance with ASTM E814 or UL 1479, with a minimum positive pressure differential of 0.01 inch (2.49 Pa) of water, and shall have an F and T rating of not less than the required *fire-resistance rating* of the wall penetrated and be installed in accordance with their listing.
5. The *annular space* created by the penetration of an automatic sprinkler, provided that it is covered by a metal escutcheon plate.
6. *Membrane penetrations* of maximum 2-hour fire-resistance-rated walls and partitions by steel electrical boxes that exceed 16 square inches (0.0 103 m^2) in area, or steel electrical boxes of any size having an aggregate area through the membrane exceeding 100 square inches (0.0645 m^2) in any 100 square feet (9.29 m^2) of wall area, provided that such penetrating items are protected by listed putty pads or other listed materials and methods, and installed in accordance with the listing.
7. Ventilation openings are permitted in the enclosed underside of combustible balconies and decks provided the closest edge of the vent opening is not more than 12 inches from the outer edge of the balcony or deck. Such vents must be covered with non-combustible corrosion resistant metal mesh. Solid blocking shall be installed between projecting framing members at the exterior building wall.

714.4.3 Dissimilar materials. Noncombustible penetrating items shall not connect to combustible items beyond the point of firestopping unless it can be demonstrated that the *fire-resistance* integrity of the wall is maintained.

714.5 Horizontal assemblies. Penetrations of a *fire-resistance-rated* floor, floor/ceiling assembly or the ceiling membrane of a roof/ceiling assembly not required to be enclosed in a shaft by Section 712.1 shall be protected in accordance with Sections 714.5.1 through 714.5.4.

714.5.1 Through penetrations. *Through penetrations* of *horizontal assemblies* shall comply with Section 714.5.1.1 or 714.5.1.2.

Exceptions:

1. Penetrations by steel, ferrous or copper conduits, pipes, tubes or vents or concrete or masonry items through a single fire-resistance-rated floor assembly where the *annular space* is protected with materials that prevent the passage of flame and hot gases sufficient to ignite cotton waste when subjected to ASTM E119 or UL 263 time-temperature fire conditions under a minimum positive pressure differential of 0.01 inch (2.49 Pa) of water at the location of the penetration for the time period equivalent to the *fire-resistance rating* of the construction penetrated. Penetrating items

DRAFT

3. Engineering analysis based on a comparison of opening protective designs having *fire protection ratings* as determined by the test procedures set forth in NFPA 252, NFPA 257, UL 9, UL 10B or UL 10C.
4. Alternative protection methods as allowed by Section ((~~104.11~~)) 104.5.

716.1.2 Glazing. Glazing used in *fire door assemblies* and fire window assemblies shall comply with this section in addition to the requirements of Sections 716.2 and 716.3, respectively.

716.1.2.1 Safety glazing. *Fire-protection-rated* glazing and fire-resistance-rated glazing installed in *fire door* assemblies and fire window assemblies shall comply with the safety glazing requirements of Chapter 24 where applicable.

716.1.2.2 Marking fire-rated glazing assemblies. *Fire-rated glazing* assemblies shall be marked in accordance with Tables 716.1(1), 716.1(2) and 716.1(3).

716.1.2.2.1 Fire-rated glazing identification. For *fire-rated glazing*, the *label* shall bear the identification required in Tables 716.1(1) and 716.1(2). "D" indicates that the glazing is permitted to be used in *fire door* assemblies and meets the fire protection requirements of NFPA 252, UL 10B or UL 10C. "H" indicates that the glazing meets the hose stream requirements of NFPA 252, UL 10B or UL 10C. "T" indicates that the glazing meets the temperature requirements of Section 716.2.2.3.1. The placeholder "XXX" represents the fire-rating period, in minutes.

716.1.2.2.2 Fire-protection-rated glazing identification. For *fire-protection-rated* glazing, the *label* shall bear the following identification required in Tables 716.1(1) and 716.1(3): "OH – XXX." "OH" indicates that the glazing meets both the fire protection and the hose-stream requirements of NFPA 257 or UL 9 and is permitted to be used in fire window openings. The placeholder "XXX" represents the fire-rating period, in minutes.

716.1.2.2.3 Fire-resistance-rated glazing identification. For fire-resistance-rated glazing, the label shall bear the identification required in Section 703.6 and Table 716.1.(1).

716.1.2.2.4 Fire-rated glazing that exceeds the code requirements. *Fire-rated glazing* assemblies marked as complying with hose stream requirements (H) shall be permitted in applications that do not require compliance with hose stream requirements. *Fire-rated glazing* assemblies marked as complying with temperature rise requirements (T) shall be permitted in applications that do not require compliance with temperature rise requirements. *Fire-rated glazing* assemblies marked with ratings (XXX) that exceed the ratings required by this code shall be permitted.

716.1.2.3 Fire-resistance-rated glazing. Fire-resistance-rated glazing tested as part of a fire-resistance-rated wall or floor/ceiling assembly in accordance with ASTM E119 or UL 263 and labeled in accordance with Section 703.6 shall not otherwise be required to comply with this section where used as part of a wall or floor/ceiling assembly.

716.1.2.3.1 Glazing in fire door and fire window assemblies. Fire-resistance-rated glazing shall be permitted in fire door and fire window assemblies where tested and installed in accordance with their listings and where in compliance with the requirements of this section.

[S] 716.2 Fire door assemblies. *Fire door assemblies* required by other sections of this code shall comply with the provisions of this section. *Fire door* frames with transom lights, sidelights or both shall be permitted in accordance with Section 716.2.5.4.

716.2.1 Testing requirements. Approved *fire door* and fire shutter assemblies shall be constructed of any material or assembly of component materials that conforms to the test requirements of Sections 716.2.1.1 through 716.2.1.4 and the *fire protection rating* indicated in Table 716.1(2).

Exceptions:

1. Labeled protective assemblies that conform to the requirements of this section or UL 10A, UL 14B and UL 14C for tin-clad *fire door* assemblies.
2. Floor *fire door* assemblies in accordance with Section 712.1.13.1.

716.2.1.1 Side-hinged or pivoted swinging doors. *Fire door* assemblies with side-hinged and pivoted swinging doors shall be tested in accordance with NFPA 252 or UL 10C. For tests conducted in accordance with NFPA 252, the fire test shall be conducted using the positive pressure method specified in the standard.

716.2.1.2 Other types of assemblies. *Fire door* assemblies with other types of doors, including swinging elevator doors, horizontal sliding fire doors, rolling steel *fire doors*, fire shutters, bottom- and side-hinged chute intake doors, and top-hinged chute discharge doors, shall be tested in accordance with NFPA 252 or UL 10B. For tests conducted in accordance with NFPA 252, the neutral pressure plane in the furnace shall be maintained as nearly equal to the atmospheric pressure as possible at the top of the door, as specified in the standard.

716.2.1.3 Glazing in transoms lights and sidelights in corridors and smoke barriers. Glazing material in any other part of the door assembly, including transom lights and sidelights, shall be tested in accordance with NFPA 257 or UL 9, including the hose stream test, in accordance with Section 716.3.1.1.

716.2.1.4 Smoke and draft control. *Fire door* assemblies that serve as smoke and draft control assemblies shall be tested in accordance with UL 1784.

DRAFT

716.2.5.3 Glazing in door assemblies in corridors and smoke barriers. In a 20-minute *fire door assembly*, the glazing material in the door itself shall have a minimum fire-protection-rated glazing of 20 minutes and shall be exempt from the hose stream test.

716.2.5.4 Fire door frames with transom lights and sidelights. Fire-protection-rated glazing shall be permitted in door frames with transom lights, sidelights or both, where a 3/4-hour *fire protection rating* or less is required and in 2-hour fire-resistance-rated exterior walls in accordance with Table 716.1(2). *Fire door* frames with transom lights, sidelights, or both, installed with fire-resistance-rated glazing tested as an assembly in accordance with ASTM E119 or UL 263 shall be permitted where a *fire protection rating* exceeding 3/4 hour is required in accordance with Table 716.1(2).

716.2.6 Fire door hardware and closures. *Fire door* hardware and closures shall be installed on *fire door assemblies* in accordance with the requirements of this section.

716.2.6.1 Door closing. *Fire doors* shall be latching and self- or automatic-closing in accordance with this section.

Exceptions:

1. *Fire doors* located in common walls separating *sleeping units* in Group R-1 shall be permitted without automatic- or *self-closing* devices.
2. The elevator car doors and the associated hoistway enclosure doors at the floor level designated for recall in accordance with ((~~Section 3003.2~~)) Chapter 30 shall be permitted to remain open during Phase I emergency recall operation.
3. In Group I-1, Condition 2 *Assisted living facilities* licensed under chapter 388-78A WAC and residential treatment facilities licensed under chapter 246-337 WAC, fire doors in dwelling and sleeping units opening to the *corridor* shall be permitted without automatic or self-closing devices when all of the following conditions exist:
   - 3.1 Each floor is constantly attended by staff on a 24-hour basis and stationed on that floor;
   - 3.2 The facility is provided with an NFPA 13 sprinkler system throughout;
   - 3.3 Doors shall be equipped with positive latching;
   - 3.4 Dwelling and sleeping units are not equipped with cooking appliances;
   - 3.5 Dwelling and sleeping units shall be equipped with a smoke detection system interconnected with the smoke detection system required by Section 907.2.6.1.

716.2.6.2 Latch required. Unless otherwise specifically permitted, *single side-hinged swinging fire doors* and both leaves of pairs of side-hinged swinging *fire doors* shall be provided with an active latch bolt that will secure the door when it is closed.

716.2.6.3 Chute intake door latching. Chute intake doors shall be positive latching, remaining latched and closed in the event of latch spring failure during a fire emergency.

716.2.6.4 Automatic-closing fire door assemblies. Automatic-closing *fire door* assemblies shall be *self-closing* in accordance with NFPA 80.

716.2.6.5 Delayed-action closers. Doors required to be *self-closing* and not required to be automatic closing shall be permitted to be equipped with delayed-action closers.

716.2.6.6 Smoke-activated doors. Automatic-closing doors installed in the following locations shall be permitted to have hold-open devices. Doors shall automatically close by the actuation of smoke detectors installed in accordance with Section 907.3 or by loss of power to the smoke detector or hold-open device. Doors that are automatic-closing by smoke detection shall not have more than a 10-second delay before the door starts to close after the smoke detector is actuated. Automatic-closing doors that protect openings installed in the following locations shall comply with this section:

1. In walls that separate incidental uses in accordance with Section 509.4.
2. In *fire walls* in accordance with Section 706.8.
3. In *fire barriers* in accordance with Section 707.6.
4. In *fire partitions* in accordance with Section 708.6.
5. In *smoke barriers* in accordance with Section 709.5.
6. In *smoke partitions* in accordance with Section 710.5.2.3.
7. In shaft enclosures in accordance with Section 713.7.
8. In waste and linen chutes, discharge openings and access and discharge rooms in accordance with Section 713.13. Loading doors installed in waste and linen chutes shall meet the requirements of Sections 716.2.6.1 and 716.2.6.3.
9. Additional doors provided at elevator hoistway door openings installed in accordance with Section 713.14.3 item 3.

DRAFT

717.3 Damper testing, ratings and actuation. *Damper* testing, ratings and actuation shall be in accordance with Sections 717.3.1 through 717.3.3.

717.3.1 Damper testing. *Dampers* shall be listed and labeled in accordance with the standards in this section.

1. *Fire dampers* shall comply with the requirements of UL 555. Only *fire dampers* labeled for use in dynamic systems shall be installed in heating, ventilation and air-conditioning systems designed to operate with fans on during a fire.
2. *Smoke dampers* shall comply with the requirements of UL 555S.
3. *Combination fire/smoke dampers* shall comply with the requirements of both UL 555 and UL 555S.
4. *Ceiling radiation dampers* shall comply with the requirements of UL 555C or shall be tested as part of a fire-resistance-rated floor/ceiling or roof/ceiling assembly in accordance with ASTM E119 or UL 263. Only *ceiling radiation dampers* labeled for use in dynamic systems shall be installed in heating, ventilation and air-conditioning systems designed to operate with fans on during a fire.
5. *Corridor dampers* shall comply with requirements of both UL 555 and UL 555S. *Corridor dampers* shall demonstrate acceptable closure performance when subjected to 150 feet per minute (0.76 mps) velocity across the face of the damper during the UL 555 fire exposure test.

717.3.2 Damper rating. *Damper* ratings shall be in accordance with Sections 717.3.2.1 through 717.3.2.4.

717.3.2.1 Fire damper ratings. *Fire dampers* shall have the minimum *rating* specified in Table 717.3.2.1.

TABLE 717.3.2.1
FIRE DAMPER RATING

TYPE OF PENETRATION	MINIMUM DAMPER RATING (hours)
Less than 3-hour fire-resistance-rated assemblies	1.5
3-hour or greater fire-resistance-rated assemblies	3

717.3.2.2 Smoke damper ratings. *Smoke damper* leakage ratings shall be Class I or II. Elevated temperature ratings shall be not less than 250°F (121°C).

717.3.2.3 Combination fire/smoke damper ratings. *Combination fire/smoke dampers* shall have the minimum *rating* specified for *fire dampers* in Table 717.3.2.1 and shall have the minimum rating specified for *smoke dampers* in Section 717.3.2.2.

717.3.2.4 Corridor damper ratings. *Corridor dampers* shall have the following minimum ratings:

1. One hour *fire-resistance rating*.
2. Class I or II leakage rating as specified in Section 717.3.2.2.

717.3.3 Damper actuation. *Damper* actuation shall be in accordance with Sections 717.3.3.1 through 717.3.3.5 as applicable.

717.3.3.1 Fire damper actuation device. The *fire damper* actuation device shall meet one of the following requirements:

1. The operating temperature shall be approximately 50°F (10°C) above the normal temperature within the duct system, but not less than 160°F (71°C).
2. The operating temperature shall be not more than 350°F (177°C) where located in a smoke control system complying with Section 909.

Interpretation I717.3: Dampers associated with exhaust fans used for hoistway and stair pressurization are permitted to comply with Section 717.3.3.1, item 2.

717.3.3.2 Smoke damper actuation. The *smoke damper* shall close upon actuation of a *listed* smoke detector or detectors installed in accordance with Section 907.3 and one of the following methods, as applicable:

1. Where a *smoke damper* is installed within a duct, a smoke detector shall be installed inside the duct or outside the duct with sampling tubes protruding into the duct. The detector or tubes within the duct shall be within 5 feet (1524 mm) of the *damper*. Air outlets and inlets shall not be located between the detector or tubes and the *damper*. The detector shall be *listed* for the air velocity, temperature and humidity anticipated at the point where it is installed. Other than in mechanical smoke control systems, *dampers* shall be closed upon fan shutdown where local smoke detectors require a minimum velocity to operate.

DRAFT

2. Where a *smoke damper* is installed above *smoke barrier* doors in a *smoke barrier*, a spot-type detector shall be installed on either side of the *smoke barrier* door opening. The detector shall be listed for releasing service if used for direct interface with the *damper*.
3. Where a *smoke damper* is installed within an air transfer opening in a wall, a spot-type detector shall be installed within 5 feet (1524 mm) horizontally of the *damper*. The detector shall be listed for releasing service if used for direct interface with the *damper*.
4. Where a *smoke damper* is installed in a *corridor* wall or ceiling, the *damper* shall be permitted to be controlled by a smoke detection system installed in the *corridor*.
5. Where a smoke detection system is installed in all areas served by the duct in which the *damper* will be located, the *smoke dampers* shall be permitted to be controlled by the smoke detection system.

717.3.3.3 Combination fire/smoke damper actuation. *Combination fire/smoke damper* actuation shall be in accordance with Sections 717.3.3.1 and 717.3.3.2. *Combination fire/smoke dampers* installed in smoke control system shaft penetrations shall not be activated by local area smoke detection unless it is secondary to the smoke management system controls.

717.3.3.4 Ceiling radiation damper actuation. The operating temperature of a *ceiling radiation damper* actuation device shall be 50°F (27.8°C) above the normal temperature within the duct system, but not less than 160°F (71°C).

717.3.3.5 Corridor damper actuation. *Corridor damper* actuation shall be in accordance with Sections 717.3.3.1 and 717.3.3.2.

717.4 Access and identification. Fire and smoke *dampers* shall be provided with an *approved* means of access that is large enough to *permit* inspection and maintenance of the *damper* and its operating parts. The access shall not affect the integrity of fire-resistance-rated assemblies. The access openings shall not reduce the *fire-resistance rating* of the assembly. Access points shall be permanently identified on the exterior by a *label* having letters not less than 1/2 inch (12.7 mm) in height reading: FIRE/SMOKE DAMPER, SMOKE DAMPER or FIRE DAMPER. Access doors in ducts shall be tight fitting and suitable for the required duct construction.

[W][S] 717.5 Where required. *Fire, dampers, smoke dampers, combination fire/smoke dampers, ceiling radiation dampers* and *corridor dampers* shall be provided at the locations prescribed in Sections 717.5.1 through 717.5.7 and 717.6. Where an assembly is required to have both *fire dampers* and *smoke dampers*, *combination fire/smoke dampers* or a *fire damper* and a *smoke damper* shall be provided.

717.5.1 Fire walls. Ducts and air transfer openings permitted in *fire walls* in accordance with Section 706.11 shall be protected with *listed fire dampers* installed in accordance with their listing.

717.5.1.1 Horizontal exits. A *listed smoke damper* designed to resist the passage of smoke shall be provided at each point a duct or air transfer opening penetrates a *fire wall* that serves as a horizontal *exit*.

717.5.2 Fire barriers. Ducts and air transfer openings of *fire barriers* shall be protected with *listed fire dampers* installed in accordance with their listing. Ducts and air transfer openings shall not penetrate enclosures for *interior exit stairways* and *ramps* and *exit passageways*, except as permitted by Sections 1023.5 and 1024.6, respectively.

Exception: *Fire dampers* are not required at penetrations of *fire barriers* where any of the following apply:

1. Penetrations are tested in accordance with ASTM E119 or UL 263 as part of the fire-resistance-rated assembly.
2. Ducts are used as part of an *approved* smoke control system in accordance with Section 909 and where the use of a *fire damper* would interfere with the operation of a smoke control system.
3. Such walls ((~~are~~)) shall have a required fire-resistance rating of 1 hour or less, penetrated by ducted HVAC systems, have a required *fire-resistance rating* of 1 hour or less, are in areas of other than Group H and are in buildings equipped throughout with an *automatic sprinkler system* in accordance with Section 903.3.1.1 or 903.3.1.2. For the purposes of this exception, a ducted HVAC system shall be a duct system for conveying supply, return or exhaust air as part of the structure's HVAC system. Such a duct system shall be constructed of sheet steel not less than No. 26 gage thickness without openings and shall be continuous from the air-handling appliance or equipment to the air outlet and inlet terminals located on the opposite side of the wall assembly.

717.5.2.1 Horizontal exits. A *listed smoke damper* designed to resist the passage of smoke shall be provided at each point a duct or air transfer opening penetrates a *fire barrier* that serves as a horizontal *exit*.

717.5.3 Shaft enclosures. Shaft enclosures that are permitted to be penetrated by ducts and air transfer openings shall be protected with *listed* fire and smoke *dampers* installed in accordance with their listing.

Exceptions:

1. *Fire dampers* are not required at penetrations of shafts where any of the following criteria are met:
   1.1. Steel exhaust subducts are extended not less than 22 inches (559 mm) vertically in exhaust shafts, provided that there is a continuous airflow upward to the outside.

DRAFT

1.2. Penetrations are tested in accordance with ASTM E119 or UL 263 as part of the fire-resistance-rated assembly.

1.3. Ducts are used as part of an *approved* smoke control system designed and installed in accordance with Section 909 and where the *fire damper* will interfere with the operation of the smoke control system.

1.4. The penetrations are in parking garage exhaust or supply shafts that are separated from other building shafts by not less than 2-hour fire-resistance-rated construction.

2. In Group B and R occupancies equipped throughout with an *automatic sprinkler system* in accordance with Section 903.3.1.1, *smoke dampers* are not required at penetrations of shafts where all of the following criteria are met:

2.1. Kitchen, clothes dryer, bathroom, ((~~and~~)) toilet room, accessory storage, and accessory trash room exhaust openings are installed with steel exhaust subducts, having a minimum wall thickness of 0.0187-inch (0.4712 mm) (No. 26 gage).

2.2. The subducts extend not less than 22 inches (559 mm) vertically.

2.3. An exhaust fan is installed at the upper terminus of the shaft that is ((~~powered continuously in accordance with the provisions of Section 909.11,~~)) provided with a *legally required standby power system* in accordance with Seattle Electrical Code Section 701 so as to maintain a continuous upward airflow to the outside.

3. *Smoke dampers* are not required at penetration of exhaust or supply shafts in parking garages that are separated from other building shafts by not less than 2-hour fire-resistance-rated construction.

4. *Smoke dampers* are not required at penetrations of shafts where ducts are used as part of an *approved* mechanical smoke control system designed in accordance with Section 909 and where the *smoke damper* will interfere with the operation of the smoke control system.

5. *Fire dampers* and *combination fire/smoke dampers* are not required in kitchen and clothes dryer exhaust systems where *dampers* are prohibited by the *International Mechanical Code*.

717.5.4 Fire partitions. Ducts and air transfer openings that penetrate *fire partitions* shall be protected with *listed fire dampers* installed in accordance with their listing.

Exceptions: In occupancies other than Group H, *fire dampers* are not required where any of the following apply:

1. Corridor walls in buildings equipped throughout with an *automatic sprinkler system* in accordance with Section 903.3.1.1 or 903.3.1.2 and the duct is protected as a *through penetration* in accordance with Section 714.

2. Tenant partitions in *covered and open mall buildings* where the walls are not required by provisions elsewhere in the code to extend to the underside of the floor or roof sheathing, slab or deck above.

3. The duct system is constructed of *approved* materials in accordance with the *International Mechanical Code* and the duct penetrating the wall complies with all of the following requirements:

3.1. The duct shall not exceed 100 square inches (0.06 m^2).

3.2. The duct shall be constructed of steel not less than 0.0217 inch (0.55 mm) in thickness.

3.3. The duct shall not have openings that communicate the *corridor* with adjacent spaces or rooms.

3.4. The duct shall be installed above a ceiling.

3.5. The duct shall not terminate at a wall register in the fire-resistance-rated wall.

3.6. A minimum 12-inch-long (305 mm) by 0.060-inch-thick (1.52 mm) steel sleeve shall be centered in each duct opening. The sleeve shall be secured to both sides of the wall and all four sides of the sleeve with minimum 1-1/2-inch by 1-1/2-inch by 0.060-inch (38 mm by 38 mm by 1.52 mm) steel retaining angles. The retaining angles shall be secured to the sleeve and the wall with No. 10 (M5) screws. The *annular space* between the steel sleeve and the wall opening shall be filled with *mineral wool* batting on all sides.

4. Such walls shall have a required fire-resistance rating of 1 hour or less, ((~~are~~)) penetrated by ducted HVAC systems ((~~, have a required *fire-resistance rating* of 1 hour or less,~~)) in areas of other than Group H and are in buildings equipped throughout with an automatic sprinkler system in accordance with Section 903.3.1.1 or 903.3.1.2. For the purposes of this exception, a ducted HVAC system shall be a duct system for conveying supply, return or exhaust air as part of the structure's HVAC system. Such a duct system shall be constructed of sheet steel not less than No. 26 gage thickness and shall be continuous without openings from the air-handling appliance or equipment to the air outlet and inlet terminals located on the opposite side of the wall assembly.

717.5.4.1 Corridors. Duct and air transfer openings that penetrate *corridors* shall be protected with *dampers* as follows:

1. A *corridor damper* shall be provided where corridor ceilings, constructed as required for the corridor walls as permitted in Section 708.4, Exception 3, are penetrated.

2. A *ceiling radiation damper* shall be provided where the ceiling membrane of a fire-resistance-rated floor-ceiling or roof-ceiling assembly, constructed as permitted in Section 708.4, Exception 2, is penetrated.

DRAFT

7. Batts or blankets of *mineral wool*, *mineral fiber* or other *approved* materials installed in such a manner as to be securely retained in place.
8. Cellulose insulation installed as tested for the specific application.
9. Mass timber complying with Section 2304.11.

718.2.1.1 Batts or blankets of mineral wool or mineral fiber. Batts or blankets of *mineral wool* or *mineral fiber* or other *approved* nonrigid materials shall be permitted for compliance with the 10-foot (3048 mm) horizontal *fireblocking* in walls constructed using parallel rows of studs or staggered studs.

718.2.1.2 Unfaced fiberglass. Unfaced fiberglass batt insulation used as *fireblocking* shall fill the entire cross section of the wall cavity to a minimum height of 16 inches (406 mm) measured vertically. Where piping, conduit or similar obstructions are encountered, the insulation shall be packed tightly around the obstruction.

718.2.1.3 Loose-fill insulation material. Loose-fill insulation material, insulating foam sealants and caulk materials shall not be used as a fireblock unless specifically tested in the form and manner intended for use to demonstrate its ability to remain in place and to retard the spread of fire and hot gases.

718.2.1.4 Fireblocking integrity. The integrity of fireblocks shall be maintained.

718.2.1.5 Double stud walls. Batts or blankets of mineral or glass fiber or other *approved* nonrigid materials shall be allowed as *fireblocking* in walls constructed using parallel rows of studs or staggered studs.

718.2.2 Concealed wall spaces. *Fireblocking* shall be provided in concealed spaces of stud walls and partitions, including furred spaces, and parallel rows of studs or staggered studs, as follows:

1. Vertically at the ceiling and floor levels.
2. Horizontally at intervals not exceeding 10 feet (3048 mm).

718.2.3 Connections between horizontal and vertical spaces. *Fireblocking* shall be provided at interconnections between concealed vertical stud wall or partition spaces and concealed horizontal spaces created by an assembly of floor joists or trusses, and between concealed vertical and horizontal spaces such as occur at soffits, drop ceilings, cove ceilings and similar locations.

718.2.4 Stairways. *Fireblocking* shall be provided in concealed spaces between *stair* stringers at the top and bottom of the run. Enclosed spaces under *stairways* shall comply with Section 1011.7.3.

718.2.5 Ceiling and floor openings. Where required by Section 712.1.8, Exception 1 of Section 714.5.1.2 or Section 714.6, *fireblocking* of the *annular space* around vents, pipes, ducts, chimneys and fireplaces at ceilings and floor levels shall be installed with a material specifically tested in the form and manner intended for use to demonstrate its ability to remain in place and resist the free passage of flame and the products of combustion.

718.2.5.1 Factory-built chimneys and fireplaces. Factory-built chimneys and fireplaces shall be fireblocked in accordance with UL 103 and UL 127.

718.2.6 Exterior wall coverings. *Fireblocking* shall be installed within concealed spaces of exterior wall coverings and other exterior architectural elements where permitted to be of combustible construction as specified in Section 1405 or where erected with combustible frames. *Fireblocking* shall be installed at maximum intervals of 20 feet (6096 mm) in either dimension so that there will be no concealed space exceeding 100 square feet (9.3 m^2) between *fireblocking*. Where wood furring strips are used, they shall be of approved wood of natural decay resistance or preservative-treated wood. If noncontinuous, such elements shall have closed ends, with not less than 4 inches (102 mm) of separation between sections.

Exceptions:

1. *Fireblocking* of cornices is not required in single-family *dwellings*. *Fireblocking* of cornices of a two-family *dwelling* is required only at the line of *dwelling unit* separation.
2. *Fireblocking* shall not be required where the exterior wall covering is installed on noncombustible framing and the face of the exterior wall covering exposed to the concealed space is covered by one of the following materials:
   - 2.1. Aluminum having a minimum thickness of 0.019 inch (0.5 mm).
   - 2.2. Corrosion-resistant steel having a base metal thickness not less than 0.016 inch (0.4 mm) at any point.
   - 2.3. Other *approved* noncombustible materials.
3. *Fireblocking* shall not be required where the exterior wall covering has been tested in accordance with, and complies with the acceptance criteria of, NFPA 285. The exterior wall covering shall be installed as tested in accordance with NFPA 285.

718.2.7 Concealed sleeper spaces. Where wood sleepers are used for laying wood flooring on masonry or concrete fire-resistance-rated floors, the space between the floor slab and the underside of the wood flooring shall be filled with an *approved* material to resist the free passage of flame and products of combustion or fireblocked in such a manner that open

DRAFT

spaces under the flooring shall not exceed 100 square feet (9.3 m^2) in area and such space shall be filled solidly under permanent partitions so that communication under the flooring between adjoining rooms shall not occur.

Exceptions:

1. *Fireblocking* is not required for slab-on-grade floors in gymnasiums.
2. *Fireblocking* is required only at the juncture of each alternate lane and at the ends of each lane in a bowling facility.

718.3 Draftstopping in floors. Draftstopping shall be installed to subdivide floor/ceiling assemblies where required by Section 708.4.2. In other than Group R occupancies, draftstopping shall be installed to subdivide combustible floor/ceiling assemblies so that horizontal floor areas do not exceed 1,000 square feet (93 m^2).

Exception: Buildings equipped throughout with an automatic sprinkler system in accordance with Section 903.3.1.1.

718.3.1 Draftstopping materials. Draftstopping materials shall be not less than 1/2-inch (12.7 mm) gypsum board, 3/8-inch (9.5 mm) wood structural panel, 3/8-inch (9.5 mm) particleboard, 1-inch (25-mm) nominal lumber, cement fiberboard, batts or blankets of *mineral wool* or glass fiber, or other *approved* materials adequately supported. The integrity of *draftstops* shall be maintained. *

718.4 Draftstopping in attics. Draftstopping shall be installed to subdivide *attic* spaces where required by Section 708.4.2. In other than Group R, draftstopping shall be installed to subdivide combustible attic spaces and combustible concealed roof spaces such that any horizontal area does not exceed 3,000 square feet (279 m^2). Ventilation of concealed roof spaces shall be maintained in accordance with Section 1202.2.1.

Exception: Buildings equipped throughout with an automatic sprinkler system in accordance with Section 903.3.1.1.

718.4.1 Draftstopping materials. Materials utilized for draftstopping of *attic* spaces shall comply with Section 718.3.1.

718.4.1.1 Openings. Openings in the partitions shall be protected by *self-closing* doors with automatic latches constructed as required for the partitions. *

[S] 718.5 Combustible materials in concealed spaces in Type I or II construction. Combustible materials shall not be permitted in concealed spaces of buildings of Type I or II construction.

Exceptions:

1. Combustible materials in accordance with Section 603.
2. Combustible materials exposed within plenums complying with Section 602 of the *International Mechanical Code*.
3. Class A *interior finish* materials classified in accordance with Section 803.
4. Combustible piping within partitions or shaft enclosures installed in accordance with the provisions of this code.
5. Combustible piping within concealed ceiling spaces installed in accordance with the *International Mechanical Code* and the ((~~*International*~~)) *Uniform Plumbing Code*.
6. Combustible insulation and covering on pipe and tubing, installed in concealed spaces other than plenums, complying with Section 720.7.

DRAFT

SECTION 719
FIRE-RESISTANCE REQUIREMENTS FOR PLASTER

719.1 Thickness of plaster. The minimum thickness of gypsum plaster or Portland cement plaster used in a fire-resistance-rated system shall be determined by the prescribed fire tests. The plaster thickness shall be measured from the face of the lath where applied to gypsum lath or metal lath.

719.2 Plaster equivalents. For *fire-resistance* purposes, 1/2 inch (12.7 mm) of unsanded gypsum plaster shall be deemed equivalent to 3/4 inch (19.1 mm) of one-to-three gypsum sand plaster or 1 inch (25 mm) of Portland cement sand plaster.

719.3 Noncombustible furring. In buildings of Type I and II construction, plaster shall be applied directly on concrete or masonry or on *approved* noncombustible plastering base and furring.

719.4 Double reinforcement. Plaster protection more than 1 inch (25 mm) in thickness shall be reinforced with an additional layer of *approved* lath embedded not less than 3/4 inch (19.1 mm) from the outer surface and fixed securely in place.

Exception: Solid plaster partitions or where otherwise determined by fire tests.

719.5 Plaster alternatives for concrete. In reinforced concrete construction, gypsum plaster or Portland cement plaster is permitted to be substituted for 1/2 inch (12.7 mm) of the required poured concrete protection, except that a minimum thickness of 3/8 inch (9.5 mm) of poured concrete shall be provided in reinforced concrete floors and 1 inch (25 mm) in reinforced concrete columns in addition to the plaster finish. The concrete base shall be prepared in accordance with Section 2510.7.

membrane consisting of a subfloor and finished floor conforming to Table 722.6.2(4) or any other membrane that has a contribution to *fire resistance* of not less than 15 minutes in Table 722.6.2(1).

722.6.2.5 Additional protection. Table 722.6.2(5) indicates the time increments to be added to the *fire resistance* where glass fiber, rockwool, slag *mineral wool* or cellulose insulation is incorporated in the assembly.

722.6.2.6 Fastening. Fastening of wood frame assemblies and the fastening of membranes to the wood framing members shall be done in accordance with Chapter 23.

[W] 722.7 Fire-resistance rating of mass timber. The required fire resistance of mass timber elements in Section 602.4 shall be determined in accordance with Section 703.2 or 703.3. The fire-resistance rating of building elements shall be as required in Tables 601 and 602 and as specified elsewhere in this code. The fire-resistance rating of the mass timber elements shall consist of the fire resistance of the unprotected element added to the protection time of the noncombustible protection.

[W] 722.7.1 Minimum required protection. When required by Sections 602.4.1 through 602.4.3, noncombustible protection shall be provided for mass timber building elements in accordance with Table 722.7.1(1). The rating, in minutes, contributed by the noncombustible protection of mass timber building elements, components, or assemblies, shall be established in accordance with Section 703.8. The protection contributions indicated in Table 722.7.1(2) shall be deemed to comply with this requirement when installed and fastened in accordance with Section 722.7.2.

TABLE 722.7.1(1)
PROTECTION REQUIRED FROM NONCOMBUSTIBLE COVERING MATERIAL

REQUIRED FIRE-RESISTANCE RATING OF BUILDING ELEMENT PER TABLES 601 AND 602 (HOURS)	MINIMUM PROTECTION REQUIRED FROM NONCOMBUSTIBLE PROTECTION (MINUTES)
1	40
2	80
3 or more	120

TABLE 722.7.1(2)
PROTECTION PROVIDED BY NONCOMBUSTIBLE COVERING MATERIAL

NONCOMBUSTIBLE PROTECTION	PROTECTION CONTRIBUTION (MINUTES)
1/2 inch Type X Gypsum board	25
5/8 inch Type X Gypsum board	40

[W] 722.7.2 Installation of gypsum board noncombustible protection. Gypsum board complying with Table 722.7.1(2) shall be installed in accordance with this section.

[W] 722.7.2.1 Interior surfaces. Layers of Type X gypsum board serving as noncombustible protection for interior surfaces of wall and ceiling assemblies determined in accordance with Table 722.7.1(1) shall be installed in accordance with the following:

1. Each layer shall be attached with Type S drywall screws of sufficient length to penetrate the mass timber at least 1 inch when driven flush with the paper surface of the gypsum board.

   EXCEPTION: The third layer, where determined necessary by Section 722.7, shall be permitted to be attached with 1 inch #6 Type S drywall screws to furring channels in accordance with ASTM C645.

2. Screws for attaching the base layer shall be 12 inches on center in both directions.
3. Screws for each layer after the base layer shall be 12 inches on center in both directions and offset from the screws of the previous layers by 4 inches in both directions.
4. All panel edges of any layer shall be offset 18 inches from those of the previous layer.
5. All panel edges shall be attached with screws sized and offset as in items 1 through 4 above and placed at least 1 inch but not more than 2 inches from the panel edge.
6. All panels installed at wall-to-ceiling intersections shall be installed such that the ceiling panel(s) is installed first and the wall panel(s) is installed after the ceiling panel has been installed and is fitted tight to the ceiling panel. Where multiple layers are required, each layer shall repeat this process.
7. All panels installed at a wall-to-wall intersection shall be installed such that the panel(s) covering an exterior wall or a wall with a greater fire-resistance rating shall be installed first and the panel(s) covering the other wall shall be fitted tight to the panel covering the first wall. Where multiple layers are required, each layer shall repeat this process.
8. Panel edges of the face layer shall be taped and finished with joint compound. Fastener heads shall be covered with joint compound.
9. Panel edges protecting mass timber elements adjacent to unprotected mass timber elements in accordance with Section 602.4.2.2 shall be covered with 1 1/4 inch metal corner bead and finished with joint compound.

DRAFT

[W] 722.7.2.2 Exterior surfaces. Layers of Type X gypsum board serving as noncombustible protection for the outside of the exterior heavy timber walls determined in accordance with Table 722.7.1(a) shall be fastened 12 inches on center each way and 6 inches on center at all joints or ends. All panel edges shall be attached with fasteners located at least 1 inch but not more than 2 inches from the panel edge. Fasteners shall comply with one of the following:

1. Galvanized nails of minimum 12 gage with a 7/16 inch head of sufficient length to penetrate the mass timber a minimum of 1 inch.
2. Screws that comply with ASTM C1002 (Type S, Type W, or Type G) of sufficient length to penetrate the mass timber a minimum of 1 inch.

DRAFT

803.1.2 Interior wall and ceiling finish materials tested in accordance with ASTM E84 or UL 723. *Interior wall* and *ceiling finish* materials shall be classified in accordance with ASTM E84 or UL 723. Such *interior finish* materials shall be grouped in the following classes in accordance with their flame spread and *smoke-developed indices*.

Class A = *Flame spread index* 0–25; *smoke-developed index 0–450*.

Class B = *Flame spread index* 26–75; *smoke-developed index 0–450*.

Class C = *Flame spread index* 76–200; *smoke-developed index 0–450*.

Exception: Materials tested in accordance with Section 803.1.1 and as indicated in Sections 803.1.3 through 803.13.

803.1.3 Interior wall and ceiling finish materials with different requirements. The materials indicated in Sections 803.2 through 803.13 shall be tested as indicated in the corresponding sections.

803.2 Thickness exemption. Materials having a thickness less than 0.036 inch (0.9 mm) applied directly to the surface of walls or ceilings shall not be required to be tested.

[W] 803.3 Heavy timber exemption. Exposed portions of building elements complying with the requirements for buildings of ((~~heavy timber~~)) Type IV construction in Section 602.4 ((~~or Section 2304.11~~)) shall not be subject to *interior finish* requirements except in interior exit stairways, interior exit ramps, and exit passageways.

803.4 Foam plastics. Foam plastics shall not be used as *interior finish* except as provided in Section 2603.9. This section shall apply both to exposed foam plastics and to foam plastics used in conjunction with a textile or vinyl facing or cover.

803.5 Textile wall coverings. Where used as interior wall finish materials, textile wall coverings, including materials having woven or nonwoven, napped, tufted, looped or similar surface and carpet and similar textile materials, shall be tested in the manner intended for use, using the product-mounting system, including adhesive, and shall comply with the requirements of one of the following: Section 803.1.1, 803.5.1 or 803.5.2.

803.5.1 Room corner test for textile wall coverings and expanded vinyl wall coverings. Textile wall coverings and *expanded vinyl wall coverings* shall meet the criteria of Section 803.5.1.1 when tested in the manner intended for use in accordance with the Method B protocol of NFPA 265 using the product-mounting system, including adhesive.

803.5.1.1 Acceptance criteria for NFPA 265. The *interior finish* shall comply with the following:

1. During the 40 kW exposure, flames shall not spread to the ceiling.
2. The flame shall not spread to the outer extremities of the samples on the 8-foot by 12-foot (203 by 305 mm) walls.
3. Flashover, as defined in NFPA 265, shall not occur.
4. The total smoke release throughout the test shall not exceed 1,000 m^2.

803.5.2 Acceptance criteria for textile and expanded vinyl wall or ceiling coverings tested to ASTM E84 or UL 723. Textile wall and ceiling coverings and expanded vinyl wall and ceiling coverings shall have a Class A *flame spread index* in accordance with ASTM E84 or UL 723 and be protected by an automatic sprinkler system installed in accordance with Section 903.3.1.1 or 903.3.1.2. Test specimen preparation and mounting shall be in accordance with ASTM E2404.

803.6 Textile ceiling coverings. Where used as interior ceiling finish materials, textile ceiling coverings, including materials having woven or nonwoven, napped, tufted, looped or similar surface and carpet and similar textile materials, shall be tested in the manner intended for use, using the product-mounting system, including adhesive, and shall comply with the requirements of Section 803.1.1 or 803.5.2.

803.7 Expanded vinyl wall coverings. Where used as interior wall finish materials, *expanded vinyl wall coverings* shall be tested in the manner intended for use, using the product-mounting system, including adhesive, and shall comply with the requirements of one of the following: Section 803.1.1, 803.5.1 or 803.5.2.

803.8 Expanded vinyl ceiling coverings. Where used as interior ceiling finish materials, expanded vinyl ceiling coverings shall be tested in the manner intended for use, using the product mounting system, including adhesive, and shall comply with the requirements of Section 803.1.1 or 803.5.2.

803.9 High-density polyethylene (HDPE) and polypropylene (PP). Where high-density polyethylene or polypropylene is used as an *interior finish*, it shall comply with Section 803.1.1.

803.10 Site-fabricated stretch systems. Where used as interior wall or interior ceiling finish materials, *site-fabricated stretch systems* containing all three components described in the definition in Chapter 2 shall be tested in the manner intended for use, and shall comply with the requirements of Section 803.1.1 or 803.1.2. If the materials are tested in accordance with ASTM E84 or UL 723, specimen preparation and mounting shall be in accordance with ASTM E2573.

803.11 Laminated products factory produced with a wood substrate. Laminated products factory produced with a wood substrate shall comply with one of the following:

1. The laminated product shall meet the criteria of Section 803.1.1.1 when tested in accordance with NFPA 286 using the product-mounting system, including adhesive, as described in Section 5.8 of NFPA 286.

DRAFT

CHAPTER 9

FIRE PROTECTION AND LIFE SAFETY SYSTEMS

User note:

About this chapter: *Chapter 9 prescribes the minimum requirements for active fire protection equipment systems to perform the functions of detecting a fire, alerting the occupants or fire department of a fire emergency, mass notification, gas detection, controlling smoke and controlling or extinguishing the fire. Generally, the requirements are based on the occupancy, the height and the area of the building, because these are the factors that most affect fire-fighting capabilities and the relative hazard of a specific building or portion thereof. This chapter parallels and is substantially duplicated in Chapter 9 of the* International Fire Code®*.*

SECTION 901
GENERAL

901.1 Scope. The provisions of this chapter shall specify where fire protection and life safety systems are required and shall apply to the design, installation and operation of *fire protection systems*.

[S] 901.2 Fire protection systems. *Fire protection systems* shall be installed, repaired, operated and maintained in accordance with this code and the *International Fire Code*.

Any *fire protection system* for which an exception or reduction to the provisions of this code has been granted shall be considered to be a required system.

Exception: Any *fire protection system* or portion thereof not required by this code shall be permitted to be installed for partial or complete protection provided that such system meets the requirements of this code.

901.2.1 Certificates required. Individuals who install, inspect, test or maintain fire protection systems shall obtain the proper certificate from the *fire code official* as required by the *International Fire Code*.

901.3 Modifications. Persons shall not remove or modify any *fire protection system* installed or maintained under the provisions of this code or the *International Fire Code* without approval by the *building official*.

901.4 Threads. Threads provided for fire department connections to sprinkler systems, standpipes, yard hydrants or any other fire hose connection shall be compatible with the connections used by the local fire department.

[S] 901.5 Acceptance tests. *Fire protection systems* shall be tested in accordance with the requirements of this code and the *International Fire Code*. Where required, the tests shall be conducted in the presence of the *building official*. Tests required by this code, the *International Fire Code* and the standards listed in this code shall be conducted at the expense of the owner or the owner's authorized agent. It shall be unlawful to occupy portions of a structure until the systems required ((~~*fire protection systems*~~)) by this code and the International Fire Code within that portion of the structure have been tested and *approved*.

901.6 Supervisory service. Where required, *fire protection systems* shall be monitored by an approved supervising station in accordance with NFPA 72.

901.6.1 Automatic sprinkler systems. *Automatic sprinkler systems* shall be monitored by an *approved* supervising station.

Exceptions:

1. A supervising station is not required for *automatic sprinkler systems* protecting one- and two-family dwellings.
2. Limited area systems in accordance with Section 903.3.8.

[F] 901.6.2 Integrated testing. Where two or more fire protection or life safety systems are interconnected, the intended response of subordinate fire protection and life safety systems shall be verified when required testing of the initiating system is conducted. In addition, integrated testing shall be performed in accordance with Sections 901.6.2.1 and 901.6.2.2.

[F] 901.6.2.1 High-rise buildings. For high-rise buildings, integrated testing shall comply with NFPA 4, with an integrated test performed prior to issuance of the certificate of occupancy and at intervals not exceeding 10 years, unless otherwise specified by an integrated system test plan prepared in accordance with NFPA 4. If an equipment failure is detected during integrated testing, a repeat of the integrated test shall not be required, except as necessary to verify operation of fire protection or life safety functions that are initiated by equipment that was repaired or replaced.

[F] 901.6.2.2 Smoke control systems. Where a fire alarm system is integrated with a smoke control system as outlined in Section 909, integrated testing shall comply with NFPA 4, with an integrated test performed prior to issuance of the certificate of occupancy and at intervals not exceeding 10 years, unless otherwise specified by an integrated system test plan prepared in accordance with NFPA 4. If an equipment failure is detected during integrated testing, a repeat of the integrated test shall not be required, except as necessary to verify operation of fire protection or life safety functions that are initiated by equipment that was repaired or replaced.

DRAFT

901.6.3 Fire alarm systems. Fire alarm systems required by the provisions of Section 907.2 of this code and Sections 907.2 and 907.9 of the *International Fire Code* shall be monitored by an *approved* supervising station in accordance with Section 907.6.6 of this code.

Exceptions:

1. Single- and multiple-station smoke alarms required by Section 907.2.10.
2. Smoke detectors in Group I-3 occupancies.
3. Supervisory service is not required for *automatic sprinkler systems* in one- and two-family dwellings and townhouses.

901.6.4 Group H. Supervision and monitoring of emergency alarm, detection and automatic fire-extinguishing systems in Group H occupancies shall be in accordance with the *International Fire Code*.

901.7 Fire areas. Where buildings, or portions thereof, are divided into *fire areas* so as not to exceed the limits established for requiring a *fire protection system* in accordance with this chapter, such *fire areas* shall be separated by *fire walls* constructed in accordance with Section 706, fire barriers constructed in accordance with Section 707, or *horizontal assemblies* constructed in accordance with Section 711, or a combination thereof having a fire-resistance rating of not less than that determined in accordance with Section 707.3.10.

SECTION 902
FIRE PUMP AND RISER ROOM SIZE

[F] 902.1 Pump and riser room size. Where provided, fire pump rooms and *automatic sprinkler system* riser rooms shall be designed with adequate space for all equipment necessary for the installation, as defined by the manufacturer, with sufficient working room around the stationary equipment. Clearances around equipment to elements of permanent construction, including other installed equipment and appliances, shall be sufficient to allow inspection, service, repair or replacement without removing such elements of permanent construction or disabling the function of a required fire-resistance-rated assembly. Fire pump and *automatic sprinkler system* riser rooms shall be provided with doors and unobstructed passageways large enough to allow removal of the largest piece of equipment.

[F] 902.1.1 Access. Automatic sprinkler system risers, fire pumps and controllers shall be provided with ready access. Where located in a fire pump room or automatic sprinkler system riser room, the door shall be permitted to be locked provided that the key is available at all times.

[F] 902.1.2 Marking on access doors. Access doors for automatic sprinkler system riser rooms and fire pump rooms shall be labeled with an approved sign. The lettering shall be in contrasting color to the background. Letters shall have a minimum height of 2 inches (51 mm) with a minimum stroke of 3/8 inch (10 mm).

[F] 902.1.3 Environment. Automatic sprinkler system riser rooms and fire pump rooms shall be maintained at a temperature of not less than 40ºF (4ºC). Heating units shall be permanently installed.

[F] 902.1.4 Lighting. Permanently installed artificial illumination shall be provided in the automatic sprinkler system riser rooms and fire pump rooms.

DRAFT

SECTION 903
AUTOMATIC SPRINKLER SYSTEMS

[F] 903.1 General. *Automatic sprinkler systems* shall comply with this section.

[F] 903.1.1 Alternative protection. Alternative *automatic fire-extinguishing systems* complying with Section 904 shall be permitted instead of automatic sprinkler protection where recognized by the applicable standard and *approved* by the fire code official.

[S][F] 903.2 Where required. Approved *automatic sprinkler systems* in new buildings and structures shall be provided in the locations described in Sections 903.2.1 through 903.2.12.

Exception: Spaces or areas in telecommunications buildings used exclusively for telecommunications equipment, associated electrical power distribution equipment, batteries and standby engines, provided that those spaces or areas are equipped throughout with an *automatic smoke detection system* in accordance with Section 907.2 and are separated from the remainder of the building by not less than 1-hour *fire barriers* constructed in accordance with Section 707 or not less than 2-hour *horizontal assemblies* constructed in accordance with Section 711, or both.

[F] 903.2.1 Group A. An *automatic sprinkler system* shall be provided throughout buildings and portions thereof used as Group A occupancies as provided in this section.

[F] 903.2.1.1 Group A-1. An *automatic sprinkler system* shall be provided throughout stories containing Group A-1 occupancies and throughout all stories from the Group A-1 occupancy to and including the levels of exit discharge serving that occupancy where one of the following conditions exists:

1. The *fire area* exceeds 12,000 square feet (1115 m^2).
2. The *fire area* has an *occupant load* of 300 or more.
3. The *fire area* is located on a floor other than a *level of exit discharge* serving such occupancies.
4. The *fire area* contains a multitheater complex.

[S][F] 903.2.1.2 Group A-2. An *automatic sprinkler system* shall be provided throughout stories containing Group A-2 occupancies and throughout all stories from the Group A-2 occupancy to and including the levels of exit discharge serving that occupancy where one of the following conditions exists:

1. The *fire area* exceeds 5,000 square feet (464 m^2).
2. The *fire area* has an *occupant load* of 100 or more.
3. The *fire area* is located on a floor other than a *level of exit discharge* serving such occupancies.

   Exception: Item 3 does not apply to fire areas that include space located one floor above the level of exit discharge if the occupant load of the upper floor is less than 50.

[F] 903.2.1.3 Group A-3. An *automatic sprinkler system* shall be provided throughout stories containing Group A-3 occupancies and throughout all stories from the Group A-3 occupancy to and including the levels of exit discharge serving that occupancy where one of the following conditions exists:

1. The *fire area* exceeds 12,000 square feet (1115 m^2).
2. The *fire area* has an *occupant load* of 300 or more.
3. The *fire area* is located on a floor other than a *level of exit discharge* serving such occupancies.

[F] 903.2.1.4 Group A-4. An *automatic sprinkler system* shall be provided throughout stories containing Group A-4 occupancies and throughout all stories from the Group A-4 occupancy to and including the levels of exit discharge serving that occupancy where one of the following conditions exists:

1. The *fire area* exceeds 12,000 square feet (1115 m^2).
2. The *fire area* has an *occupant load* of 300 or more.
3. The *fire area* is located on a floor other than a *level of exit discharge* serving such occupancies.

[F] 903.2.1.5 Group A-5. An *automatic sprinkler system* shall be provided for all enclosed Group A-5 accessory use areas in excess of 1,000 square feet (93 m^2).

[F] 903.2.1.5.1 Spaces under grandstands or bleachers. Enclosed spaces under grandstands or *bleachers* shall be equipped with an *automatic sprinkler system* in accordance with Section 903.3.1.1 where either of the following exist:

1. The enclosed area is 1,000 square feet (93 m^2) or less and is not constructed in accordance with Section 1029.1.1.1.
2. The enclosed area exceeds 1,000 square feet (93 m^2).

[S][F] 903.2.1.6 Assembly occupancies on roofs. Where an occupied roof has an assembly occupancy with an *occupant load* exceeding 100 for Group A-2 and 300 for other Group A occupancies, ((~~all floors between the occupied roof and the *level of exit discharge*~~)) the *building* shall be equipped with an *automatic sprinkler system* in accordance with Section 903.3.1.1 or 903.3.1.2.

Exception: Open parking garages of Type I or Type II construction.

903.2.1.7 Multiple fire areas. An *automatic sprinkler system* shall be provided where multiple fire areas of Group A-1, A-2, A-3 or A-4 occupancies share exit or exit access components and the combined *occupant load* of theses fire areas is 300 or more.

[W] 903.2.1.8 Nightclubs. An *automatic sprinkler system* shall be provided throughout *nightclubs.*

[F] 903.2.2 Ambulatory care facilities. An *automatic sprinkler system* shall be installed throughout the entire floor containing an *ambulatory care facility* where either of the following conditions exist at any time:

1. Four or more care recipients are incapable of self-preservation.
2. One or more care recipients that are incapable of self-preservation are located at other than the level of exit discharge serving such a facility.

In buildings where ambulatory care is provided on levels other than the *level of exit discharge*, an *automatic sprinkler system* shall be installed throughout the entire floor as well as all floors below where such care is provided, and all floors between the level of ambulatory care and the nearest *level of exit discharge*, the level of exit discharge, and all floors below the level of *exit discharge*.

Exception: Floors classified as an open parking garage are not required to be sprinklered.

[W][S][F] 903.2.3 Group E. An *automatic sprinkler system* shall be provided for Group E ((~~occupancies as follows:~~)) fire areas.

((~~1. Throughout all Group E *fire areas* greater than 12,000 square feet (1115 m^2) in area.~~

DRAFT

~~2. The Group E fire area is located on a floor other than a level of exit discharge serving such occupancies.~~

~~**Exception:** In buildings where every classroom has not fewer than one exterior exit door at ground level, an *automatic sprinkler system* is not required in any area below the lowest level of exit discharge serving that area.~~

~~3. The Group E fire area has an occupant load of 300 or more.~~))

Exceptions:

1. *Portable school classrooms* with an occupant load of 50 or less calculated in accordance with Table 1004.1.2, if the aggregate area of any cluster of *portable school classrooms* does not exceed 6,000 square feet (557 m^2); and clusters of *portable school classrooms* shall be separated as required in Chapter 5.
2. *Portable school classrooms* with an occupant load from 51 through 98, calculated in accordance with Table 1004.1.2, and provided with two means of direct independent exterior egress from each classroom in accordance with Chapter 10, and one exit from each classroom shall be accessible, provided that the aggregate area of any cluster of portable classrooms does not exceed 6,000 square feet (557 m^2), and clusters of *portable school classrooms* shall be separated as required by Chapter 5.
3. Group E occupancies with an occupant load of 50 or less within the Group E occupancy, calculated in accordance with Table 1004.1.2.
4. Group E daycare and preschool facilities with an occupant load of 100 or less, when located at the level of exit discharge, where every room in which care is provided has not fewer than one exterior exit door.

[F] 903.2.4 Group F-1. An *automatic sprinkler system* shall be provided throughout all buildings containing a Group F-1 occupancy where one of the following conditions exists:

1. A Group F-1 *fire area* exceeds 12,000 square feet (1115 m^2).
2. A Group F-1 *fire area* is located more than three stories above *grade plane*.
3. The combined area of all Group F-1 *fire areas* on all floors, including any mezzanines, exceeds 24,000 square feet (2230 m^2).
4. A Group F-1 occupancy used for the manufacture of upholstered furniture or mattresses exceeds 2,500 square feet (232 m^2).

[F] 903.2.4.1 Woodworking operations. An *automatic sprinkler system* shall be provided throughout all Group F-1 occupancy *fire areas* that contain woodworking operations in excess of 2,500 square feet (232 m^2) in area that generate finely divided combustible waste or use finely divided combustible materials.

[F] 903.2.5 Group H. *Automatic sprinkler systems* shall be provided in high-hazard occupancies as required in Sections 903.2.5.1 through 903.2.5.3.

[F] 903.2.5.1 General. An *automatic sprinkler system* shall be installed in Group H occupancies.

[F] 903.2.5.2 Group H-5 occupancies. An *automatic sprinkler system* shall be installed throughout buildings containing Group H-5 occupancies. The design of the sprinkler system shall be not less than that required by this code for the occupancy hazard classifications in accordance with Table 903.2.5.2.

Where the design area of the sprinkler system consists of a *corridor* protected by one row of sprinklers, the maximum number of sprinklers required to be calculated is 13.

[F] 903.2.5.3 Pyroxylin plastics. An *automatic sprinkler system* shall be provided in buildings, or portions thereof, where cellulose nitrate film or pyroxylin plastics are manufactured, stored or handled in quantities exceeding 100 pounds (45 kg).

[F] TABLE 903.2.5.2
GROUP H-5 SPRINKLER DESIGN CRITERIA

LOCATION	OCCUPANCY HAZARD CLASSIFICATION
Fabrication areas	Ordinary Hazard Group 2
Service corridors	Ordinary Hazard Group 2
Storage rooms without dispensing	Ordinary Hazard Group 2
Storage rooms with dispensing	Extra Hazard Group 2
Corridors	Ordinary Hazard Group 2

[W][S][F] 903.2.6 Group I. An *automatic sprinkler system* in accordance with Section 903.3.1.1 shall be provided throughout buildings with a Group I *fire area*.

Exceptions:

1. An *automatic sprinkler system* installed in accordance with Section 903.3.1.2 shall be permitted in Group I-1, Condition 1 facilities.

DRAFT

2. An *automatic sprinkler system* is not required ((~~where~~)) in Group I-4 day care facilities ((~~are~~)) with an occupant load of 100 or less when located at the *level of exit discharge* and where every room where care is provided has not fewer than one exterior exit door.
3. In buildings where Group I-4 day care is provided on levels other than the *level of exit discharge*, an *automatic sprinkler system* in accordance with Section 903.3.1.1 shall be installed on the entire floor where care is provided, all floors between the level of care and the *level of exit discharge*, and all floors below the *level of exit discharge* other than areas classified as an open parking garage.
4. Where new construction houses less than sixteen persons receiving care, an *automatic sprinkler system* installed in accordance with 903.3.1.2 shall be permitted for Group I-1, condition 2, *assisted living facilities* licensed under chapter 388-78A WAC and residential treatment facilities licensed under chapter 246-337 WAC.
5. An automatic sprinkler system installed in accordance with Section 903.3.1.2 shall be permitted in additions to existing buildings where both of the following situations are true:
   5.1. The addition is made to a building previously approved as Group LC or Group R-2 that houses either an assisted living facility licensed under chapter 388-78A WAC or residential treatment facility licensed under chapter 246-337 WAC.
   5.2. The addition contains spaces for sixteen or fewer persons receiving care.

[W] 903.2.6.1 Group I-4. An automatic sprinkler system shall be provided in fire areas containing Group I-4 occupancies where the fire area has an occupant load of 51 or more, calculated in accordance with Table 1004.1.2.

Exception: An automatic sprinkler system is not required for Group I-4 day care facilities with a total occupant load of 100 or less, and located at the level of exit discharge and where every room where care is provided has not fewer than one exterior exit door.

903.2.6.1.1 Group I-4 daycare located other than level of discharge. In buildings where Group I-4 day care is provided on levels other than the level of exit discharge, an automatic sprinkler system in accordance with Section 903.3.1.1 shall be installed on the entire floor where care is provided, including the level of exit discharge, and all floors between the level of care and the level of exit discharge and all floors below the level of exit discharge other than areas classified as an open parking garage.

[F] 903.2.7 Group M. An *automatic sprinkler system* shall be provided throughout buildings containing a Group M occupancy where one of the following conditions exists:

1. A Group M *fire area* exceeds 12,000 square feet (1115 m^2).
2. A Group M *fire area* is located more than three stories above *grade plane*.
3. The combined area of all Group M *fire areas* on all floors, including any mezzanines, exceeds 24,000 square feet (2230 m^2).
4. A Group M occupancy used for the display and sale of upholstered furniture or mattresses exceeds 5,000 square feet (464 m^2).

[F] 903.2.7.1 High-piled storage. An *automatic sprinkler system* shall be provided in accordance with the *International Fire Code* in all buildings of Group M where storage of merchandise is in high-piled or rack storage arrays.

[W][F] 903.2.8 Group R. An *automatic sprinkler system* installed in accordance with Section 903.3 shall be provided throughout all buildings with a Group R *fire area*.

Exception: Group R-1 if all of the following conditions apply:

1. The Group R *fire area* is no more than 500 square feet and is used for recreational use only.
2. The Group R fire area is on only one *story*.
3. The Group R fire area does not include a basement.
4. The Group R fire area is no closer than 30 feet from another structure.
5. Cooking is not allowed within the Group R fire area.
6. The Group R fire area has an occupant load of no more than 8.
7. A hand-held (portable) fire extinguisher is in every Group R fire area.

[S][F] 903.2.8.1 Group R-3. An *automatic sprinkler system* installed in accordance with Section 903.3.1.3 shall be permitted in Group R-3 occupancies.

((~~**[F] 903.2.8.2 Group R-4, Condition 1.** An *automatic sprinkler system* installed in accordance with Section 903.3.1.3 shall be permitted in Group R-4, Condition 1 occupancies.~~

DRAFT

~~**[F] 903.2.8.3 Group R-4, Condition 2.** An *automatic sprinkler system* installed in accordance with Section 903.3.1.2 shall be permitted in Group R-4, Condition 2 occupancies.~~))

[F] 903.2.8.4 Care facilities. An a*utomatic sprinkler system* installed in accordance with Section 903.3.1.3 shall be permitted in care facilities with five or fewer individuals in a single-family dwelling.

[F] 903.2.9 Group S-1. An *automatic sprinkler system* shall be provided throughout all buildings containing a Group S-1 occupancy where one of the following conditions exists:

1. A Group S-1 *fire area* exceeds 12,000 square feet (1115 m^2).
2. A Group S-1 *fire area* is located more than three stories above *grade plane*.
3. The combined area of all Group S-1 *fire areas* on all floors, including any mezzanines, exceeds 24,000 square feet (2230 m^2).
4. A Group S-1 *fire area* used for the storage of commercial motor vehicles where the *fire area* exceeds 5,000 square feet (464 m^2).
5. A Group S-1 occupancy used for the storage of upholstered furniture or mattresses exceeds 2,500 square feet (232 m^2).

[F] 903.2.9.1 ((~~Repair~~)) Major repair garages. An *automatic sprinkler system* shall be provided throughout all buildings used as major repair garages in accordance with Section 406, as shown:

1. Buildings having two or more *stories above grade plane*, including basements, with a *fire area* containing a major repair garage exceeding 10,000 square feet (929 m^2).
2. Buildings not more than one *story above grade plane*, with a *fire area* containing a major repair garage exceeding 12,000 square feet (1115 m^2).
3. Buildings with major repair garages servicing vehicles parked in basements.
4. A Group S-1 *fire area* used for the major repair of commercial motor vehicles where the *fire area* exceeds 5,000 square feet (464 m^2).

[F] 903.2.9.2 Bulk storage of tires. Buildings and structures where the area for the storage of tires exceeds 20,000 cubic feet (566 m^3) shall be equipped throughout with an *automatic sprinkler system* in accordance with Section 903.3.1.1.

[W] 903.2.9.3 Group 5-1 upholstered furniture and mattresses. An automatic sprinkler system shall be provided throughout a Group S-1 fire area where the area used for storage of upholstered furniture exceeds 2,500 square feet (232 m^2).

EXCEPTION: Self-service storage facilities no greater than one story above grade plane where all storage spaces can be accessed directly from the exterior.

[F] 903.2.10 Group S-2 enclosed parking garages. An *automatic sprinkler system* shall be provided throughout buildings classified as enclosed parking garages in accordance with Section 406.6 where either of the following conditions exists:

1. Where the *fire area* of the enclosed parking garage exceeds 12,000 square feet (1115 m^2).
2. Where the enclosed parking garage is located beneath other groups.

   Exception: Enclosed parking garages located beneath Group R-3 occupancies.

[F] 903.2.10.1 Commercial parking garages. An *automatic sprinkler system* shall be provided throughout buildings used for storage of commercial motor vehicles where the *fire area* exceeds 5,000 square feet (464 m^2).

[F] 903.2.11 Specific building areas and hazards. In all occupancies other than Group U, an *automatic sprinkler system* shall be installed for building design or hazards in the locations set forth in Sections 903.2.11.1 through ((~~903.2.11.6~~)) 903.2.11.7.

[F] 903.2.11.1 Stories without openings. An *automatic sprinkler system* shall be installed throughout all *stories*, including basements, of all buildings where the floor area exceeds 1,500 square feet (139.4 m^2) and where the story does not comply with the following criteria for exterior wall openings:

1. Openings below grade that lead directly to ground level by an exterior *stairway* complying with Section 1011 or an outside ramp complying with Section 1012. Openings shall be located in each 50 linear feet (15 240 mm), or fraction thereof, of *exterior wall* in the *story* on not fewer than one side. The required openings shall be distributed such that the lineal distance between adjacent openings does not exceed 50 feet (15 240 mm).
2. Openings entirely above the adjoining ground level totaling not less than 20 square feet (1.86 m^2) in each 50 linear feet (15 240 mm), or fraction thereof, of *exterior wall* in the story on not fewer than one side. The required openings shall be distributed such that the lineal distance between adjacent openings does not exceed 50 feet (15 240 mm). The height of the bottom of the clear opening shall not exceed 44 inches (1118 mm) measured from the floor.

DRAFT

[F] 903.2.11.1.1 Opening dimensions and access. Openings shall have a minimum dimension of not less than 30 inches (762 mm). Access to such openings shall be provided for the fire department from the exterior and shall not be obstructed in a manner such that fire fighting or rescue cannot be accomplished from the exterior.

[F] 903.2.11.1.2 Openings on one side only. Where openings in a *story* are provided on only one side and the opposite wall of such *story* is more than 75 feet (22 860 mm) from such openings, the *story* shall be equipped throughout with an *approved automatic sprinkler system*, or openings shall be provided on not fewer than two sides of the *story*.

[S][F] 903.2.11.1.3 Basements. Where any portion of a *basement* is located more than 75 feet (22 860 mm) from openings required by Section 903.2.11.1, ((~~or where walls, partitions or other obstructions are installed that restrict the application of water from hose streams,~~)) the *basement* shall be equipped throughout with an *approved automatic sprinkler system*.

[F] 903.2.11.2 Rubbish and linen chutes. An *automatic sprinkler system* shall be installed at the top of rubbish and linen chutes and in their terminal rooms. Chutes shall have additional sprinkler heads installed at alternate floors and at the lowest intake. Where a rubbish chute extends through a building more than one floor below the lowest intake, the extension shall have sprinklers installed that are recessed from the drop area of the chute and protected from freezing in accordance with Section 903.3.1.1. Such sprinklers shall be installed at alternate floors, beginning with the second level below the last intake and ending with the floor above the discharge. *Access* to sprinklers in chutes shall be provided for servicing.

[F] 903.2.11.3 Buildings 55 feet or more in height. An *automatic sprinkler system* shall be installed throughout buildings that have one or more stories with an *occupant load* of 30 or more located 55 feet (16 764 mm) or more above the lowest level of fire department vehicle access, measured to the finished floor.

Exceptions:

1. Open parking structures.
2. Occupancies in Group F-2.

[F] 903.2.11.4 Ducts conveying hazardous exhausts. Where required by the *International Mechanical Code*, automatic sprinklers shall be provided in ducts conveying hazardous exhaust or flammable or combustible materials.

Exception: Ducts where the largest cross-sectional diameter of the duct is less than 10 inches (254 mm).

[F] 903.2.11.5 Commercial cooking operations. An *automatic sprinkler system* shall be installed in commercial kitchen exhaust hood and duct systems where an *automatic sprinkler system* is used to comply with Section 904.

[F] 903.2.11.6 Other required suppression systems. In addition to the requirements of Section 903.2, the provisions indicated in Table 903.2.11.6 require the installation of a fire suppression system for certain buildings and areas.

DRAFT

[F] TABLE 903.2.11.6
ADDITIONAL REQUIRED SUPPRESSION SYSTEMS

SECTION	SUBJECT
402.5, 402.6.2	Covered and open mall buildings
403.3	High-rise buildings
404.3	Atriums
405.3	Underground structures
407.7	Group I-2
410.6	Stages
411.3	Special amusement buildings
412.2.4	Airport traffic control towers
412.3.6, 412.3.6.1, 412.5.6	Aircraft hangars
415.11.11	Group H-5 HPM exhaust ducts
416.5	Flammable finishes
417.4	Drying rooms
419.5	*Live/work units*
424.3	Children's play structures
428	Buildings containing laboratory suites
507	Unlimited area buildings
509.4	Incidental uses
1029.6.2.3	Smoke-protected assembly seating
IFC	Sprinkler system requirements as set forth in Section 903.2.11.6 of the *International Fire Code*

DRAFT

[W][S] 903.2.11.7 Relocatable buildings within buildings. Relocatable buildings or structures located within a building with an *approved* fire sprinkler system shall be provided with fire sprinkler protection within the occupiable space of the building and the space underneath the relocatable building.

Exceptions:

1. Sprinkler protection is not required underneath the building when the space is separated from the adjacent space by construction resisting the passage of smoke and heat and combustible storage will not be located there.
2. If the building or structure does not have a roof or ceiling obstructing the overhead sprinklers.
3. Construction trailers and temporary offices used during new building construction prior to occupancy.
4. Movable shopping mall kiosks with a roof or canopy dimension of less than 4 feet on the smallest side.

[F] 903.2.12 During construction. *Automatic sprinkler systems* required during construction, *alteration* and demolition operations shall be provided in accordance with Chapter 33 of the *International Fire Code*.

[F] 903.3 Installation requirements. *Automatic sprinkler systems* shall be designed and installed in accordance with Sections 903.3.1 through 903.3.8.

[S][F] 903.3.1 Standards. Sprinkler systems shall be designed and installed in accordance with Section 903.3.1.1 and rules promulgated by the building or *fire code official* unless otherwise permitted by Sections 903.3.1.2 and 903.3.1.3 and other chapters of this code, as applicable.

[F] 903.3.1.1 NFPA 13 sprinkler systems. Where the provisions of this code require that a building or portion thereof be equipped throughout with an *automatic sprinkler system* in accordance with this section, sprinklers shall be installed throughout in accordance with NFPA 13 except as provided in Sections 903.3.1.1.1 and ((~~903.3.1.1.2~~)) 903.3.1.1.3.

[F] 903.3.1.1.1 Exempt locations. Automatic sprinklers shall not be required in the following rooms or areas where such rooms or areas are protected with an *approved* automatic fire detection system in accordance with Section 907.2 that will respond to visible or invisible particles of combustion. Sprinklers shall not be omitted from a room merely because it is damp, of fire-resistance-rated construction or contains electrical equipment.

1. A room where the application of water, or flame and water, constitutes a serious life or fire hazard, when approved by the *fire code official*.

2. A room or space where sprinklers are considered undesirable because of the nature of the contents, where *approved* by the fire code official.
3. ((~~Generator and transformer rooms~~)) Transformer vaults separated from the remainder of the building by walls and floor/ceiling or roof/ceiling assemblies having a *fire-resistance rating* of not less than ((~~2~~)) 3 hours.
4. Rooms or areas that are of noncombustible construction with wholly noncombustible contents.

((~~5. Fire service access elevator machine rooms and machinery spaces.~~

~~6~~)) 5. Machine rooms, machinery spaces, control rooms and control spaces ((~~associated with occupant evacuation elevators designed in accordance with Section 3008~~)) in accordance with rules promulgated by the building and *fire code official*.

[F] 903.3.1.1.2 Bathrooms. In Group R occupancies sprinklers shall not be required in bathrooms that do not exceed 55 square feet (5 m^2) in area and are located within individual *dwelling units* or *sleeping units*, provided that walls and ceilings, including the walls and ceilings behind a shower enclosure or tub, are of noncombustible or limited-combustible materials with a 15-minute thermal barrier rating.

[S] 903.3.1.1.3 High-rise building sprinkler system design. High-rise building sprinkler systems shall be combination standpipe/sprinkler systems incorporating the following features:

1. Each floor sprinkler system shall be connected between standpipe risers.
2. Shut-off valves, water-flow devices and check valves (or pressure reducing valves) shall be provided on each floor at the sprinkler system connection to each standpipe.
3. Two four-way fire department connections serving the combination system shall be provided on separate streets well separated from each other.
4. At least one of the fire department connections shall be connected to the riser above a riser isolation valve.
5. When a mid-level fire pump is required to meet pressure requirements, two pumps with the same rating shall be installed.
6. Dry-pipe sprinkler systems serving parking garages may use separate two-way fire department connection. The dry-pipe sprinkler system shall be supplied by the on-site water tank.
7. The standpipe risers in each required stair shall be a minimum pipe size of 6 inches (152 mm).
8. Two 2-1/2-inch (64 mm) hose connections shall be provided on every floor level landing in every required stairway. If pressure reducing valves (PRV) are required, each hose connection shall be provided with its own PRV.
9. The system shall be designed to provide a minimum flow of 300 gpm (19 L/s) at a minimum pressure of 150 psi (1034 kPa) [maximum 205 psi (1379 kPa)] at each standpipe connection in addition to the flow and pressure requirements contained in NFPA 14.
10. When a mid-level pump is required to meet pressure requirements, two mid-level pumps with the same rating shall be provided.

[F] 903.3.1.2 NFPA 13R sprinkler systems. *Automatic sprinkler systems* in Group R occupancies up to and including four stories in height in buildings not exceeding 60 feet (18 288 mm) in height above grade plane shall be permitted to be installed throughout in accordance with NFPA 13R.

The number of stories of Group R occupancies constructed in accordance with Sections 510.2 and 510.4 shall be measured from the horizontal assembly creating separate buildings.

[S][F] 903.3.1.2.1 Balconies and decks. Sprinkler protection shall be provided for exterior balconies, decks and ground floor patios of *dwelling units* and *sleeping units* in accordance with rules promulgated by the *building official* or *fire code official.* ((~~where~~)) Where either of the following conditions exists:

1. The building is of Type V construction, provided that there is a roof or deck above.
2. Exterior balconies, decks and ground floor patios of dwelling units and sleeping units are constructed in accordance with Section 705.2.3.1, Exception 3.

Sidewall sprinklers that are used to protect such areas shall be permitted to be located such that their deflectors are within 1 inch (25 mm) to 6 inches (152 mm) below the structural members and a maximum distance of 14 inches (356 mm) below the deck of the exterior balconies and decks that are constructed of open wood joist construction.

[F] 903.3.1.2.2 Open-ended corridors. Sprinkler protection shall be provided in *open-ended corridors* and associated *exterior stairways* and *ramps* as specified in Section 1027.6, Exception 3.

[F] 903.3.1.2.3 Attics. Attic protection shall be provided as follows:

DRAFT

1. Attics that are used or intended for living purposes or storage shall be protected by an *automatic sprinkler system*.
2. Where fuel-fired equipment is installed in an unsprinklered attic, not fewer than one quick-response intermediate temperature sprinkler shall be installed above the equipment.
3. Where located in a building of Type III, Type IV or Type V construction designed in accordance with Section 510.2 or 510.4, attics not required by Item 1 to have sprinklers shall comply with one of the following if the roof assembly is located more than 55 feet (16 764 mm) above the lowest level of required fire department vehicle access:
   3.1. Provide *automatic sprinkler system* protection.
   3.2. Construct the attic using noncombust-ible materials.
   3.3. Construct the attic using fire-retardant-treated wood complying with Section 2303.2.
   3.4. Fill the attic with noncombustible insulation.

   The height of the roof assembly shall be determined by measuring the distance from the lowest required fire vehicle access road surface adjacent to the building to the eave of the highest pitched roof, the intersection of the highest roof to the exterior wall, or the top of the highest parapet, whichever yields the greatest distance. For the purpose of this measurement, required fire vehicle access roads shall include only those roads that are necessary for compliance with Section 503 of the *International Fire Code*.
4. Group R-4, Condition 2 occupancy attics not required by Item 1 to have sprinklers shall comply with one of the following:
   4.1. Provide *automatic sprinkler system* protection.
   4.2. Provide a heat detection system throughout the attic that is arranged to activate the building fire alarm system.
   4.3. Construct the attic using noncombust-ible materials.
   4.4. Construct the attic using fire-retardant-treated wood complying with Section 2303.2.
   4.5. Fill the attic with noncombustible insulation.

[S][F] 903.3.1.3 NFPA 13D sprinkler systems. *Automatic sprinkler systems* installed in one- and two-family *dwellings*; Group R-3; ((~~Group R-4, Condition 1;~~)) and *townhouses*, when approved by the *fire code official*, shall be permitted to be installed throughout in accordance with NFPA 13D.

[F] 903.3.2 Quick-response and residential sprinklers. Where *automatic sprinkler systems* are required by this code, quick-response or residential automatic sprinklers shall be installed in all of the following areas in accordance with Section 903.3.1 and their listings:

1. Throughout all spaces within a smoke compartment containing care recipient *sleeping units* in Group I-2 in accordance with this code.
2. Throughout all spaces within a smoke compartment containing treatment rooms in ambulatory care facilities.
3. *Dwelling units* and *sleeping units* in Group I-1 and R occupancies.
4. Light-hazard occupancies as defined in NFPA 13.

[S][F] 903.3.3 Obstructed locations. Automatic sprinklers shall be installed ((~~with regard to obstructions that will delay activation or obstruct the water distribution pattern~~)) in accordance with NFPA 13 obstruction criteria and the listing requirements of the sprinkler and shall be in accordance with the applicable *automatic sprinkler system* standard that is being used. Automatic sprinklers shall be installed in or under covered kiosks, displays, booths, concession stands, or equipment that exceeds 4 feet (1219 mm) in width and depth. Not less than a 3-foot (914 mm) clearance shall be maintained between automatic sprinklers and the top of piles of combustible fibers.

Exception: Kitchen equipment under exhaust hoods protected with a fire-extinguishing system in accordance with Section 904.

[F] 903.3.4 Actuation. *Automatic sprinkler systems* shall be automatically actuated unless specifically provided for in this code.

[S][F] 903.3.5 Water supplies. Water supplies for *automatic sprinkler systems* shall comply with this section and the standards referenced in Section 903.3.1. The potable water supply shall be protected against backflow in accordance with the requirements of this section and the ((~~*International*~~)) *Uniform Plumbing Code*. For connections to public waterworks systems, the water supply test data provided by Seattle Public Utilities and used for design of fire protection systems shall be adjusted ((~~to account for seasonal and daily pressure fluctuations based on information from the water supply authority and as approved by the fire code official~~)) in accordance with rules promulgated by the *fire code official*.

[F] 903.3.5.1 Domestic services. Where the domestic service provides the water supply for the *automatic sprinkler system*, the supply shall be in accordance with this section.

DRAFT

[S][F] 903.3.5.2 ((~~Residential combination~~)) Combined fire/domestic services. A single combination water supply shall be allowed for all types of sprinkler systems provided that, when required, the domestic demand is added to the sprinkler demand ((~~as required by~~)) in accordance with the domestic demand tables in NFPA 13R.

[W][S] 903.3.5.3 Underground portions of fire protection system water supply piping. The installation or modification of an underground water main, public or private, supplying a water-based fire protection system shall be in accordance with NFPA 24 and RCW 18.160. Piping and appurtenances downstream of the first control valve on the lateral or service line from the distribution main to one foot above finished floor shall be approved by the *fire code official*. Such underground piping shall be installed by a fire sprinkler contractor licensed in accordance with chapter 18.160 RCW and holding either a Level U or a Level 3 license. For underground piping supplying systems installed in accordance with Section 903.3.1.2, a Level 2, 3, or U licensed contractor is acceptable.

Exceptions: Portions of underground piping that are combined fire/domestic services, or are supplying *automatic sprinkler systems* installed in accordance with NFPA 13D.

[F] 903.3.6 Hose threads. Fire hose threads and fittings used in connection with *automatic sprinkler systems* shall be as prescribed by the fire code official.

[F] 903.3.7 Fire department connections. Fire department connections for *automatic sprinkler systems* shall be installed in accordance with Section 912.

[F] 903.3.8 Limited area sprinkler systems. Limited area sprinkler systems shall be in accordance with the standards listed in Section 903.3.1 except as provided in Sections 903.3.8.1 through 903.3.8.5.

903.3.8.1 Number of sprinklers. Limited area sprinkler systems shall not exceed six sprinklers in any single *fire area*.

903.3.8.2 Occupancy hazard classification. Only areas classified by NFPA 13 as Light Hazard or Ordinary Hazard Group 1 shall be permitted to be protected by limited area sprinkler systems.

903.3.8.3 Piping arrangement. Where a limited area sprinkler system is installed in a building with an automatic wet standpipe system, sprinklers shall be supplied by the standpipe system. Where a limited area sprinkler system is installed in a building without an automatic wet standpipe system, water shall be permitted to be supplied by the plumbing system provided that the plumbing system is capable of simultaneously supplying domestic and sprinkler demands.

903.3.8.4 Supervision. Control valves shall not be installed between the water supply and sprinklers unless the valves are of an *approved* indicating type that are supervised or secured in the open position.

903.3.8.5 Calculations. Hydraulic calculations in accordance with NFPA 13 shall be provided to demonstrate that the available water flow and pressure are adequate to supply all sprinklers installed in any single *fire area* with discharge densities corresponding to the hazard classification.

[S][F] 903.4 Sprinkler system supervision and alarms. Valves controlling the water supply for *automatic sprinkler systems*, pumps, tanks, water levels and temperatures, critical air pressures and waterflow switches on all sprinkler systems shall be electrically supervised by a *listed* fire alarm control unit.

Exceptions:

1. *Automatic sprinkler systems* protecting one- and two-family *dwellings* and *townhouses* if approved by the *fire code official*.
2. Limited area sprinkler systems in accordance with Section 903.3.8.
3. *Automatic sprinkler systems* installed in accordance with NFPA 13R where a common supply main is used to supply both domestic water and the *automatic sprinkler system*, and a separate shutoff valve for the *automatic sprinkler system* is not provided.
4. Jockey pump control valves that are sealed or locked in the open position.
5. Control valves to commercial kitchen hoods, paint spray booths or dip tanks that are sealed or locked in the open position.
6. Valves controlling the fuel supply to fire pump engines that are sealed or locked in the open position.
7. Trim valves to pressure switches in dry, preaction and deluge sprinkler systems that are sealed or locked in the open position.

[F] 903.4.1 Monitoring. Alarm, supervisory and trouble signals shall be distinctly different and shall be automatically transmitted to an *approved* supervising station or, where *approved* by the fire code official, shall sound an audible signal at a *constantly attended location*.

Exceptions:

1. ((~~Underground key or hub valves in roadway boxes~~)) Valves provided by the municipality or public utility are not required to be monitored.

DRAFT

2. Backflow prevention device test valves located in limited area sprinkler system supply piping shall be locked in the open position. In occupancies required to be equipped with a fire alarm system, the backflow preventer valves shall be electrically supervised by a tamper switch installed in accordance with NFPA 72 and separately annunciated.

[F] 903.4.2 Alarms. An approved audible device, located on the exterior of the building in an approved location, shall be connected to each *automatic sprinkler system*. Such sprinkler waterflow alarm devices shall be activated by water flow equivalent to the flow of a single sprinkler of the smallest orifice size installed in the system. Where a fire alarm system is installed, actuation of the *automatic sprinkler system* shall actuate the building fire alarm system.

[F] 903.4.3 Floor control valves. *Approved* supervised indicating control valves shall be provided at the point of connection to the riser on each floor in high-rise buildings.

[F] 903.5 Testing and maintenance. Sprinkler systems shall be tested and maintained in accordance with the *International Fire Code*.

SECTION 904
ALTERNATIVE AUTOMATIC FIRE-EXTINGUISHING SYSTEMS

[F] 904.1 General. Automatic fire-extinguishing systems, other than *automatic sprinkler systems*, shall be designed, installed, inspected, tested and maintained in accordance with the provisions of this section and the applicable referenced standards.

[F] 904.2 Where permitted. Automatic fire-extinguishing systems installed as an alternative to the required *automatic sprinkler systems* of Section 903 shall be *approved* by the fire code official.

[F] 904.2.1 Restriction on using automatic sprinkler system exceptions or reductions. Automatic fire-extinguishing systems shall not be considered alternatives for the purposes of exceptions or reductions allowed for *automatic sprinkler systems* or by other requirements of this code.

[F] 904.2.2 Commercial hood and duct systems. Each required commercial kitchen exhaust hood and duct system required by Section 609 of the *International Fire Code* or Chapter 5 of the *International Mechanical Code* to have a Type I hood shall be protected with an approved automatic fire-extinguishing system installed in accordance with this code.

[S][F] 904.3 Installation. Automatic fire-extinguishing systems shall be installed in accordance with this section.

[F] 904.3.1 Electrical wiring. Electrical wiring shall be in accordance with ((~~NFPA 70~~)) the Seattle Electrical Code.

[F] 904.3.2 Actuation. Automatic fire-extinguishing systems shall be automatically actuated and provided with a manual means of actuation in accordance with Section 904.11.1. Where more than one hazard could be simultaneously involved in fire due to their proximity, all hazards shall be protected by a single system designed to protect all hazards that could become involved.

Exception: Multiple systems shall be permitted to be installed if they are designed to operate simultaneously.

[F] 904.3.3 System interlocking. Automatic equipment interlocks with fuel shutoffs, ventilation controls, door closers, window shutters, conveyor openings, smoke and heat vents and other features necessary for proper operation of the fire-extinguishing system shall be provided as required by the design and installation standard utilized for the hazard.

[F] 904.3.4 Alarms and warning signs. Where alarms are required to indicate the operation of automatic fire-extinguishing systems, distinctive audible and visible alarms and warning signs shall be provided to warn of pending agent discharge. Where exposure to automatic-extinguishing agents poses a hazard to persons and a delay is required to ensure the evacuation of occupants before agent discharge, a separate warning signal shall be provided to alert occupants once agent discharge has begun. Audible signals shall be in accordance with Section 907.5.2.

[F] 904.3.5 Monitoring. Where a building fire alarm system is installed, automatic fire-extinguishing systems shall be monitored by the building fire alarm system in accordance with NFPA 72.

[F] 904.4 Inspection and testing. Automatic fire-extinguishing systems shall be inspected and tested in accordance with the provisions of this section prior to acceptance.

[F] 904.4.1 Inspection. Prior to conducting final acceptance tests, all of the following items shall be inspected:

1. Hazard specification for consistency with design hazard.
2. Type, location and spacing of automatic- and manual-initiating devices.
3. Size, placement and position of nozzles or discharge orifices.
4. Location and identification of audible and visible alarm devices.
5. Identification of devices with proper designations.
6. Operating instructions.

DRAFT

[F] 904.4.2 Alarm testing. Notification appliances, connections to fire alarm systems and connections to *approved* supervising stations shall be tested in accordance with this section and Section 907 to verify proper operation.

[F] 904.4.2.1 Audible and visible signals. The audibility and visibility of notification appliances signaling agent discharge or system operation, where required, shall be verified.

[F] 904.4.3 Monitor testing. Connections to protected premises and supervising station fire alarm systems shall be tested to verify proper identification and retransmission of alarms from automatic fire-extinguishing systems.

[F] 904.5 Wet-chemical systems. Wet-chemical extinguishing systems shall be installed, maintained, periodically inspected and tested in accordance with NFPA 17A and their listing. Records of inspections and testing shall be maintained.

[F] 904.6 Dry-chemical systems. Dry-chemical extinguishing systems shall be installed, maintained, periodically inspected and tested in accordance with NFPA 17 and their listing. Records of inspections and testing shall be maintained.

[F] 904.7 Foam systems. Foam-extinguishing systems shall be installed, maintained, periodically inspected and tested in accordance with NFPA 11 and NFPA 16 and their listing. Records of inspections and testing shall be maintained.

[F] 904.8 Carbon dioxide systems. Carbon dioxide extinguishing systems shall be installed, maintained, periodically inspected and tested in accordance with NFPA 12 and their listing. Records of inspections and testing shall be maintained.

[F] 904.9 Halon systems. Halogenated extinguishing systems shall be installed, maintained, periodically inspected and tested in accordance with NFPA 12A and their listing. Records of inspections and testing shall be maintained.

[F] 904.10 Clean-agent systems. Clean-agent fire-extinguishing systems shall be installed, maintained, periodically inspected and tested in accordance with NFPA 2001 and their listing. Records of inspections and testing shall be maintained.

[F] 904.11 Automatic water mist systems. *Automatic water mist systems* shall be permitted in applications that are consistent with the applicable listing or approvals and shall comply with Sections 904.11.1 through 904.11.3.

[F] 904.11.1 Design and installation requirements. *Automatic water mist systems* shall be designed and installed in accordance with Sections 904.11.1.1 through 904.11.1.4.

[F] 904.11.1.1 General. *Automatic water mist systems* shall be designed and installed in accordance with NFPA 750 and the manufacturer's instructions.

[F] 904.11.1.2 Actuation. *Automatic water mist systems* shall be automatically actuated.

[F] 904.11.1.3 Water supply protection. Connections to a potable water supply shall be protected against backflow in accordance with the *International Plumbing Code*.

[F] 904.11.1.4 Secondary water supply. Where a secondary water supply is required for an *automatic sprinkler system*, an *automatic water mist system* shall be provided with an *approved* secondary water supply.

[F] 904.11.2 Water mist system supervision and alarms. Supervision and alarms shall be provided as required for *automatic sprinkler systems* in accordance with Section 903.4.

[F] 904.11.2.1 Monitoring. Monitoring shall be provided as required for *automatic sprinkler systems* in accordance with Section 903.4.1.

[F] 904.11.2.2 Alarms. Alarms shall be provided as required for *automatic sprinkler systems* in accordance with Section 903.4.2.

[F] 904.11.2.3 Floor control valves. Floor control valves shall be provided as required for *automatic sprinkler systems* in accordance with Section 903.4.3.

[F] 904.11.3 Testing and maintenance. *Automatic water mist systems* shall be tested and maintained in accordance with the *International Fire Code*.

[S][F] 904.12 Commercial cooking systems. The automatic fire-extinguishing system for commercial cooking systems shall be of a type recognized for protection of commercial cooking equipment and exhaust systems of the type and arrangement protected. Preengineered automatic dry- and wet-chemical extinguishing systems shall be tested in accordance with UL 300 and *listed* and *labeled* for the intended application. Other types of automatic fire-extinguishing systems shall be *listed* and *labeled* for specific use as protection for commercial cooking operations. The system shall be installed in accordance with this code, NFPA 96, its listing and the manufacturer's installation instructions. Signage shall be provided on the exhaust hood or system cabinet, indicating the type and arrangement of cooking appliances protected by the automatic fire extinguishing system. Signage shall indicate appliances from left to right, be durable, and the size, color and lettering shall be approved. Automatic fire-extinguishing systems of the following types shall be installed in accordance with the referenced standard indicated, as follows:

1. Carbon dioxide extinguishing systems, NFPA 12.
2. *Automatic sprinkler systems*, NFPA 13.
3. Automatic water mist systems, NFPA 750.
4. Foam-water sprinkler system or foam-water spray systems, NFPA 16.

DRAFT

[S][F] 905.2 Installation standard. Standpipe systems shall be installed in accordance with this section, ((~~and~~)) NFPA 14 and rules promulgated by the building or *fire code official*. Fire department connections for standpipe systems shall be in accordance with Section 912.

[S][F] 905.3 Required installations. Standpipe systems shall be installed where required by Sections 905.3.1 through 905.3.8. Standpipe systems are allowed to be combined with *automatic sprinkler systems*.

Exception: Standpipe systems are not required in ((~~Group R-3 occupancies~~)) one- and two-family *dwellings* and townhouses.

[F] 905.3.1 Height. Class III standpipe systems shall be installed throughout buildings where any of the following conditions exist:

1. Four or more stories are above or below grade plane.
2. The floor level of the highest *story* is located more than 30 feet (9144 mm) above the lowest level of fire department vehicle access.
3. The floor level of the lowest *story* is located more than 30 feet (9144 mm) below the highest level of fire department vehicle access.

Exceptions:

1. Class I standpipes are allowed in buildings equipped throughout with an *automatic sprinkler system* in accordance with Section 903.3.1.1 or 903.3.1.2.
2. Class I standpipes are allowed in Group B and E occupancies.
3. Class I manual standpipes are allowed in *open parking garages* where the highest floor is located not more than 150 feet (45 720 mm) above the lowest level of fire department vehicle access.
4. Class I manual dry standpipes are allowed in *open parking garages* that are subject to freezing temperatures, provided that the hose connections are located as required for Class II standpipes in accordance with Section 905.5.
5. Class I standpipes are allowed in basements equipped throughout with an *automatic sprinkler system*.
6. Class I standpipes are allowed in buildings where occupant-use hose lines will not be utilized by trained personnel or the fire department.
7. In determining the lowest level of fire department vehicle access, it shall not be required to consider either of the following:
   - 7.1. Recessed loading docks for four vehicles or less.
   - 7.2. Conditions where topography makes access from the fire department vehicle to the building impractical or impossible.

[F] 905.3.2 Group A. Class I automatic wet standpipes shall be provided in nonsprinklered Group A buildings having an *occupant load* exceeding 1,000 persons.

Exceptions:

1. Open-air-seating spaces without enclosed spaces.
2. Class I automatic dry and semiautomatic dry standpipes or manual wet standpipes are allowed in buildings that are not high-rise buildings.

[S][F] 905.3.3 Covered and open mall buildings. Covered mall and open mall buildings shall be equipped throughout with a Class I standpipe system ((~~where required by Section 905.3.1. Mall buildings not required to be equipped with a standpipe system by Section 905.3.1 shall be equipped with Class I hose connections connected to the *automatic sprinkler system* sized to deliver water at 250 gallons per minute (946.4 L/min) at the hydraulically most remote hose connection while concurrently supplying the automatic sprinkler system demand. The standpipe system shall be designed to not exceed a 50 pounds per square inch (psi) (345 kPa) residual pressure loss with a flow of 250 gallons per minute (946.4 L/min) from the fire department connection to the hydraulically most remote hose connection. Hose~~)) with hose connections ((~~shall be~~)) provided at each of the following locations:

1. Within the mall at the entrance to each *exit* passageway or *corridor*.
2. At each floor-level landing within *interior exit stairways* opening directly on the mall.
3. At exterior public entrances to the mall of a covered mall building.
4. At public entrances at the perimeter line of an open mall building.
5. At other locations as necessary so that the distance to reach all portions of a tenant space does not exceed 200 feet (60 960 mm) from a hose connection.

((~~**[F] 905.3.4 Stages.** Stages greater than 1,000 square feet in area (93 m^2) shall be equipped with a Class III wet standpipe system with 1-1/2-inch and 2-1/2-inch (38 mm and 64 mm) hose connections on each side of the stage.~~

DRAFT

~~**Exception:** Where the building or area is equipped throughout with an *automatic sprinkler system*, a 1-1/2-inch (38 mm) hose connection shall be installed in accordance with NFPA 13 or in accordance with NFPA 14 for Class II or III standpipes.~~

~~**[F] 905.3.4.1 Hose and cabinet.** The 1-1/2-inch (38 mm) hose connections shall be equipped with sufficient lengths of 1-1/2-inch (38 mm) hose to provide fire protection for the stage area. Hose connections shall be equipped with an *approved* adjustable fog nozzle and be mounted in a cabinet or on a rack.~~))

[F] ((~~905.3.5~~)) 905.3.4 Underground buildings. Underground buildings shall be equipped throughout with a Class I automatic wet or manual wet standpipe system.

[F] ((~~905.3.6~~)) 905.3.5 Helistops and heliports. Buildings with a rooftop *helistop* or *heliport* shall be equipped with a Class I or III standpipe system extended to the roof level on which the *helistop* or *heliport* is located in accordance with Section 2007.5 of the *International Fire Code*.

[F] ((~~905.3.7~~)) 905.3.6 Marinas and boatyards. Standpipes in marinas and boatyards shall comply with Chapter 36 of the *International Fire Code.*

[F] ((~~905.3.8~~)) 905.3.7 Rooftop gardens and landscaped roofs. Buildings or structures that have rooftop gardens or landscaped roofs and that are equipped with a standpipe system shall have the standpipe system extended to the roof level on which the rooftop garden or landscaped roof is located.

[S][F] 905.4 Location of Class I standpipe hose connections. Class I standpipe hose connections shall be provided in all of the following locations:

1. In every required *interior exit stairway*, a hose connection shall be provided for each story above and below grade plane. Hose connections shall be located at the main floor landing ((~~unless otherwise *approved* by the fire code official~~)) or the main landing at each *story*, but must be consistent throughout a building.

   Exception: A single hose connection shall be permitted to be installed in the open corridor or open breezeway between open stairs that are not greater than 75 feet (22 860 mm) apart.

2. On each side of the wall adjacent to the *exit* opening of a *horizontal exit*.

   Exception: Where floor areas adjacent to a *horizontal exit* are reachable from an *interior exit stairway* hose connection by a 30-foot (9144 mm) hose stream from a nozzle attached to 100 feet (30 480 mm) of hose, a hose connection shall not be required at the *horizontal exit*.

3. In every *exit* passageway, at the entrance from the *exit* passageway to other areas of a building.

   Exception: Where floor areas adjacent to an *exit* passageway are reachable from an *interior exit stairway* hose connection by a 30-foot (9144 mm) hose stream from a nozzle attached to 100 feet (30 480 mm) of hose, a hose connection shall not be required at the entrance from the *exit* passageway to other areas of the building.

4. In covered mall buildings, adjacent to each exterior public entrance to the mall and adjacent to each entrance from an exit passageway or exit corridor to the mall. In open mall buildings, adjacent to each public entrance to the mall at the perimeter line and adjacent to each entrance from an exit passageway or exit corridor to the mall.

5. Where the roof has a slope less than four units vertical in 12 units horizontal (33.3-percent slope), a hose connection shall be located to serve the roof or at the highest landing of an *interior exit stairway* with access to the roof provided in accordance with Section 1011.12. Hose connections on a roof shall be at least 10 feet (3048 mm) from the roof edge, skylight, light well or other opening, unless protected by an *approved* 42-inch-high (1067 mm) guard or equivalent.

6. Where the most remote portion of a nonsprinklered floor or *story* is more than 150 feet (45 720 mm) from a hose connection or the most remote portion of a sprinklered floor or *story* or roof is more than 200 feet (60 960 mm) from a hose connection, the fire code official is authorized to require that additional hose connections be provided in *approved* locations. Access to the additional hose connections shall be through protected enclosures. The protected enclosure shall be a corridor constructed as a smoke barrier from the interior exit stairway to the standpipe connection. Additional hose connections in parking garages and roofs are not required to be accessed through or located in protected enclosures.

[F] 905.4.1 Protection. Risers and laterals of Class I standpipe systems not located within an *interior exit stairway* shall be protected by a degree of *fire resistance* equal to that required for vertical enclosures in the building in which they are located.

Exception: In buildings equipped throughout with an *approved automatic sprinkler system*, laterals that are not located within an *interior exit stairway* are not required to be enclosed within fire-resistance-rated construction.

[F] 905.4.2 Interconnection. In buildings where more than one standpipe is provided, the standpipes shall be interconnected in accordance with NFPA 14.

[S][F] 905.5 Location of Class II standpipe hose connections. Class II standpipe hose connections located so that all portions of the building are within 30 feet (9144 mm) of a nozzle attached to 100 feet (30 480 mm) of hose. Class II standpipe hose connections shall be located where they will have *ready access*.

DRAFT

((~~**[F] 905.5.1 Groups A-1 and A-2.** In Group A-1 and A-2 occupancies having *occupant loads* exceeding 1,000 persons, hose connections shall be located on each side of any stage, on each side of the rear of the auditorium, on each side of the balcony and on each tier of dressing rooms.~~))

[F] ((~~905.5.2~~)) 905.5.1 Protection. Fire-resistance-rated protection of risers and laterals of Class II standpipe systems is not required.

[F] ((~~905.5.3~~)) 905.5.2 Class II system 1-inch hose. A minimum 1-inch (25 mm) hose shall be allowed to be used for hose stations in light-hazard occupancies where investigated and *listed* for this service and where *approved* by the fire code official.

[F] 905.6 Location of Class III standpipe hose connections. Class III standpipe systems shall have hose connections located as required for Class I standpipes in Section 905.4 and shall have Class II hose connections as required in Section 905.5.

[F] 905.6.1 Protection. Risers and laterals of Class III standpipe systems shall be protected as required for Class I systems in accordance with Section 905.4.1.

[F] 905.6.2 Interconnection. In buildings where more than one Class III standpipe is provided, the standpipes shall be interconnected in accordance with NFPA 14.

[F] 905.7 Cabinets. Cabinets containing fire-fighting equipment such as standpipes, fire hoses, fire extinguishers or fire department valves shall not be blocked from use or obscured from view.

[F] 905.7.1 Cabinet equipment identification. Cabinets shall be identified in an *approved* manner by a permanently attached sign with letters not less than 2 inches (51 mm) high in a color that contrasts with the background color, indicating the equipment contained therein.

Exceptions:

1. Doors not large enough to accommodate a written sign shall be marked with a permanently attached pictogram of the equipment contained therein.
2. Doors that have either an *approved* visual identification clear glass panel or a complete glass door panel are not required to be marked.

[F] 905.7.2 Locking cabinet doors. Cabinets shall be unlocked.

Exceptions:

1. Visual identification panels of glass or other *approved* transparent frangible material that is easily broken and allows access.
2. *Approved* locking arrangements.
3. Group I-3 occupancies.

[F] 905.8 Dry standpipes. Dry standpipes shall not be installed.

Exception: Where subject to freezing and in accordance with NFPA 14.

[S][F] 905.9 Valve supervision. Valves controlling water supplies shall be supervised in the open position so that a change in the normal position of the valve will generate a supervisory signal at the supervising station required by Section 903.4. Where a fire alarm system is provided, a signal shall be transmitted to the control unit.

Exceptions:

1. Valves ((~~to underground key or hub valves in roadway boxes~~)) provided by the municipality or public utility do not require supervision.
2. Valves locked in the normal position and inspected as provided in this code in buildings not equipped with a fire alarm system or *approved* supervising station.

[F] 905.10 During construction. Standpipe systems required during construction and demolition operations shall be provided in accordance with Section 3311.

[F] 905.11 Locking standpipe outlet caps. The *fire code official* is authorized to require locking caps on the outlets on dry standpipes where the responding fire department carries key wrenches for the removal that are compatible with locking FDC connection caps.

SECTION 906
PORTABLE FIRE EXTINGUISHERS

[F] 906.1 Where required. Portable fire extinguishers shall be installed in all of the following locations:

1. In Group A, B, E, F, H, I, M, R-1, R-2, R-4 and S occupancies.

DRAFT

Portable fire extinguishers for occupancies involving flammable or combustible liquids with a depth of greater than 0.25-inch (6.4 mm) shall be selected and placed in accordance with NFPA 10.

[F] 906.3.3 Class C fire hazards. Portable fire extinguishers for Class C fire hazards shall be selected and placed on the basis of the anticipated Class A or B hazard.

[F] 906.3.4 Class D fire hazards. Portable fire extinguishers for occupancies involving combustible metals shall be selected and placed in accordance with NFPA 10.

**

[F] 906.4 Cooking equipment fires. Fire extinguishers provided for the protection of cooking equipment shall be of an *approved* type compatible with the automatic fire-extinguishing system agent. Cooking equipment involving solid fuels or vegetable or animal oils and fats shall be protected by a Class K-rated portable extinguisher in accordance with Sections 906.1, Item 2, 906.4.1 and 906.4.2 of the *International Fire Code*, as applicable.

[F] 906.5 Conspicuous location. Portable fire extinguishers shall be located in conspicuous locations where they will have *ready access* and be immediately available for use. These locations shall be along normal paths of travel, unless the fire code official determines that the hazard posed indicates the need for placement away from normal paths of travel.

[F] 906.6 Unobstructed and unobscured. Portable fire extinguishers shall not be obstructed or obscured from view. In rooms or areas in which visual obstruction cannot be completely avoided, means shall be provided to indicate the locations of extinguishers.

[F] 906.7 Hangers and brackets. Hand-held portable fire extinguishers, not housed in cabinets, shall be installed on the hangers or brackets supplied. Hangers or brackets shall be securely anchored to the mounting surface in accordance with the manufacturer's installation instructions.

[F] 906.8 Cabinets. Cabinets used to house portable fire extinguishers shall not be locked.

Exceptions:

1. Where portable fire extinguishers subject to malicious use or damage are provided with a means of ready access.
2. In Group I-3 occupancies and in mental health areas in Group I-2 occupancies, access to portable fire extinguishers shall be permitted to be locked or to be located in staff locations provided that the staff has keys.

[F] 906.9 Extinguisher installation. The installation of portable fire extinguishers shall be in accordance with Sections 906.9.1 through 906.9.3.

[F] 906.9.1 Extinguishers weighing 40 pounds or less. Portable fire extinguishers having a gross weight not exceeding 40 pounds (18 kg) shall be installed so that their tops are not more than 5 feet (1524 mm) above the floor.

[F] 906.9.2 Extinguishers weighing more than 40 pounds. Hand-held portable fire extinguishers having a gross weight exceeding 40 pounds (18 kg) shall be installed so that their tops are not more than 3.5 feet (1067 mm) above the floor.

[F] 906.9.3 Floor clearance. The clearance between the floor and the bottom of installed hand-held portable fire extinguishers shall be not less than 4 inches (102 mm).

[F] 906.10 Wheeled units. Wheeled fire extinguishers shall be conspicuously located in a designated location.

DRAFT

SECTION 907
FIRE ALARM AND DETECTION SYSTEMS

[S][F] 907.1 General. This section covers the application, installation, performance and maintenance of fire alarm systems and their components. Buildings required by this section to be provided with a fire alarm system shall be provided with a single fire alarm system. For the purposes of this section, *fire walls* not located on a property line shall not constitute a separate building.

Exception: A single system is not required in *existing buildings* that are being increased in size and the existing fire alarm system is unable to expand into the new space. In those cases multiple systems shall be arranged as described below for non-required fire alarm systems.

Buildings not required by this section to be provided with a fire alarm system may be provided with multiple partial fire alarm systems if:

1. The systems are connected so that all systems simultaneously activate alarm notification appliances upon a signal from any of the fire alarm systems in the building, and
2. The location of each system's annunciator panel (or main panel) is also provided with annunciator panels with reset capability for every other system in the building.

[F] 907.1.1 Construction documents. *Construction documents* for fire alarm systems shall be of sufficient clarity to indicate the location, nature and extent of the work proposed and show in detail that it will conform to the provisions of this code, the *International Fire Code* and relevant laws, ordinances, rules and regulations, as determined by the fire code official.

[S][F] 907.1.2 Fire alarm shop drawings. All *construction documents* shall be reviewed by a NICET III or IV in fire alarms or a professional engineer licensed in the state of Washington prior to being submitted for permitting. The reviewing professional shall submit a stamped, signed and dated letter; or a verification method approved by the *fire code official* indicating the system has been reviewed and meets or exceeds the design requirements of the State of Washington and the *fire code official.*

Shop drawings for fire alarm systems shall be prepared in accordance with NFPA 72 and submitted for review and approval prior to system installation.

[F] 907.1.3 Equipment. Systems and components shall be *listed* and *approved* for the purpose for which they are installed.

[F] 907.2 Where required—new buildings and structures. An *approved* fire alarm system installed in accordance with the provisions of this code and NFPA 72 shall be provided in new buildings and structures in accordance with Sections 907.2.1 through 907.2.23 and provide occupant notification in accordance with Section 907.5, unless other requirements are provided by another section of this code.

Not fewer than one manual fire alarm box shall be provided in an *approved* location to initiate a fire alarm signal for fire alarm systems employing automatic fire detectors or waterflow detection devices. Where other sections of this code allow elimination of fire alarm boxes due to sprinklers, a single fire alarm box shall be installed.

Exceptions:

1. The manual fire alarm box is not required for fire alarm systems dedicated to elevator recall control and supervisory service.
2. The manual fire alarm box is not required for Group R-2 occupancies unless required by the *fire code official* to provide a means for fire watch personnel to initiate an alarm during a sprinkler system impairment event. Where provided, the manual fire alarm box shall not be located in an area that is open to the public.

[F] 907.2.1 Group A. A manual fire alarm system that activates the occupant notification system in accordance with Section 907.5 shall be installed in Group A occupancies where the occupant load due to the assembly occupancy is 300 or more, or where the Group A occupant load is more than 100 persons above or below the *lowest level of exit discharge*. Group A occupancies not separated from one another in accordance with Section 707.3.10 shall be considered as a single occupancy for the purposes of applying this section. Portions of Group E occupancies occupied for assembly purposes shall be provided with a fire alarm system as required for the Group E occupancy.

Exception: Manual fire alarm boxes are not required where the building is equipped throughout with an *automatic sprinkler system* installed in accordance with Section 903.3.1.1 and the occupant notification appliances will activate throughout the notification zones upon sprinkler water flow.

[F] 907.2.1.1 System initiation in Group A occupancies with an occupant load of 1,000 or more. Activation of the fire alarm in Group A occupancies with an *occupant load* of 1,000 or more shall initiate a signal using an emergency voice/alarm communications system in accordance with Section 907.5.2.2.

Exception: Where *approved*, the prerecorded announcement is allowed to be manually deactivated for a period of time, not to exceed 3 minutes, for the sole purpose of allowing a live voice announcement from an *approved*, *constantly attended location.*

[F] 907.2.1.2 Emergency voice/alarm communication captions. Stadiums, arenas and grandstands required to caption audible public announcements shall be in accordance with Section 907.5.2.2.4.

[F] 907.2.2 Group B. A manual fire alarm system shall be installed in Group B occupancies where one of the following conditions exists:

1. The combined Group B *occupant load* of all floors is 500 or more.
2. The Group B *occupant load* is more than 100 persons above or below the lowest *level of exit discharge*.
3. The *fire area* contains an ambulatory care facility.

Exception: Manual fire alarm boxes are not required where the building is equipped throughout with an *automatic sprinkler system* installed in accordance with Section 903.3.1.1 and the occupant notification appliances will activate throughout the notification zones upon sprinkler water flow.

[F] 907.2.2.1 Ambulatory care facilities. *Fire areas* containing ambulatory care facilities shall be provided with an electronically supervised automatic smoke detection system installed within the ambulatory care facility and in public use areas outside of tenant spaces, including public *corridors* and elevator lobbies.

Exception: Buildings equipped throughout with an *automatic sprinkler system* in accordance with Section 903.3.1.1, provided that the occupant notification appliances will activate throughout the notification zones upon sprinkler waterflow.

DRAFT

[W] 907.2.3 Group E. ((~~A manual fire alarm system that initiates the occupant notification signal utilizing an emergency voice/alarm communication system meeting the requirements of Section 907.5.2.2 and installed in accordance with Section 907.6 shall be installed in Group E occupancies. Where *automatic sprinkler systems* or smoke detectors are installed, such systems or detectors shall be connected to the building fire alarm system.~~)) Group E occupancies shall be provided with a manual fire alarm system that initiates the occupant notification signal utilizing one of the following:

1. An emergency voice/alarm communication system meeting the requirements of Section 907.5.2.2 and installed in accordance with Section 907.6; or
2. A system developed as part of a safe school plan adopted in accordance with RCW 28A.320.125 or developed as part of an emergency response system consistent with the provisions of RCW 28A.320.126. The system must achieve all of the following performance standards:
   - 2.1 The ability to broadcast voice messages or customized announcements;
   - 2.2 Includes a feature for multiple sounds, including sounds to initiate a lock down;
   - 2.3 The ability to deliver messages to the interior of a building, areas outside of a building as designated pursuant to the safe school plan, and to personnel;
   - 2.4 The ability for two-way communications;
   - 2.5 The ability for individual room calling;
   - 2.6 The ability for a manual override;
   - 2.7 Installation in accordance with NFPA 72;
   - 2.8 Provide 15 minutes of battery backup for alarm and 24 hours of battery backup for standby; and
   - 2.9 Includes a program for annual inspection and maintenance in accordance with NFPA 72.

Exceptions:

1. A manual fire alarm system is not required in Group E occupancies with an *occupant load* of 50 or less.
2. Emergency voice/alarm communication systems meeting the requirements of Section 907.5.2.2 and installed in accordance with Section 907.6 shall not be required in Group E occupancies with occupant loads of 100 or less, provided that activation of the manual fire alarm system initiates an *approved* occupant notification signal in accordance with Section 907.5.
3. Where an existing approved alarm system is in place, an emergency voice/alarm system is not required in any portion of an existing Group E building undergoing any one of the following repairs, alteration or addition:
   - 3.1 Alteration or repair to an existing building including, without limitation, alterations to rooms and systems, and/or corridor configurations, not exceeding 35 percent of the fire area of the building (or the fire area undergoing the alteration or repair if the building is comprised of two or more fire areas); or
   - 3.2 An addition to an existing building, not exceeding 35 percent of the fire area of the building (or the fire area to which the addition is made if the building is comprised of two or more fire areas).

((~~3~~)) 4. Manual fire alarm boxes are not required in Group E occupancies where all of the following apply:

((~~3.1~~)) 4.1. Interior *corridors* are protected by smoke detectors.

((~~3.2~~)) 4.2. Auditoriums, cafeterias, gymnasiums and similar areas are protected by *heat detectors* or other *approved* detection devices.

((~~3.3~~)) 4.3. Shops and laboratories involving dusts or vapors are protected by *heat detectors* or other *approved* detection devices.

((4)) 5. Manual fire alarm boxes shall not be required in Group E occupancies where all of the following apply:

((~~4.1~~)) 5.1. The building is equipped throughout with an *approved automatic sprinkler system* installed in accordance with Section 903.3.1.1.

((~~4.2~~)) 5.2. The emergency voice/alarm communication system will activate on sprinkler waterflow.

((~~4.3~~)) 5.3. Manual activation is provided from a normally occupied location.

[W][F] 907.2.3.1 Sprinkler systems or detection. When automatic sprinkler systems or smoke detectors are installed, such systems or detectors shall be connected to the building fire alarm system.

[F] 907.2.4 Group F. A manual fire alarm system that activates the occupant notification system in accordance with Section 907.5 shall be installed in Group F occupancies where both of the following conditions exist:

1. The Group F occupancy is two or more *stories* in height.
2. The Group F occupancy has a combined *occupant load* of 500 or more above or below the lowest *level of exit discharge*.

DRAFT

Exception: Manual fire alarm boxes are not required where the building is equipped throughout with an *automatic sprinkler system* installed in accordance with Section 903.3.1.1 and the occupant notification appliances will activate throughout the notification zones upon sprinkler water flow.

[F] 907.2.5 Group H. A manual fire alarm system that activates the occupant notification system in accordance with Section 907.5 shall be installed in Group H-5 occupancies and in occupancies used for the manufacture of organic coatings. An automatic smoke detection system shall be installed for highly toxic gases, organic peroxides and oxidizers in accordance with Chapters 60, 62 and 63, respectively, of the *International Fire Code*.

[F] 907.2.6 Group I. A manual fire alarm system that activates the occupant notification system in accordance with Section 907.5 shall be installed in Group I occupancies. An automatic smoke detection system that activates the occupant notification system in accordance with Section 907.5 shall be provided in accordance with Sections 907.2.6.1, 907.2.6.2, and 907.2.6.3.3.

Exceptions:

1. Manual fire alarm boxes in sleeping units of Group I-1 and I-2 occupancies shall not be required at *exits* if located at all care providers' control stations or other constantly attended staff locations, provided that such manual fire alarm boxes are visible and provided with *ready access*, and the distances of travel required in Section 907.4.2.1 are not exceeded.
2. Occupant notification systems are not required to be activated where private mode signaling installed in accordance with NFPA 72 is *approved* by the fire code official and staff evacuation responsibilities are included in the fire safety and evacuation plan required by Section 404 of the *International Fire Code*.

[S][F] 907.2.6.1 Group I-1. In Group I-1 occupancies, an automatic smoke detection system shall be installed in *corridors*, waiting areas open to *corridors* and *habitable spaces* other than *sleeping units* and kitchens. The system shall be activated in accordance with Section ((~~907.5~~)) 907.4.

Exceptions:

1. For Group I-1, Condition 1 occupancies, smoke detection in *habitable spaces* is not required where the facility is equipped throughout with an *automatic sprinkler system* installed in accordance with Section 903.3.1.1.
2. Smoke detection is not required for exterior balconies.

[F] 907.2.6.1.1 Smoke alarms. Single- and multiple-station smoke alarms shall be installed in accordance with Section 907.2.10.

[F] 907.2.6.2 Group I-2. An automatic smoke detection system shall be installed in *corridors* in Group I-2, Condition 1 facilities and spaces permitted to be open to the *corridors* by Section 407.2. The system shall be activated in accordance with Section 907.4. Group I-2, Condition 2 occupancies shall be equipped with an automatic smoke detection system as required in Section 407.

Exceptions:

1. Corridor smoke detection is not required in smoke compartments that contain sleeping units where such units are provided with smoke detectors that comply with UL 268. Such detectors shall provide a visual display on the corridor side of each sleeping unit and shall provide an audible and visual alarm at the care providers' station attending each unit.
2. Corridor smoke detection is not required in smoke compartments that contain sleeping units where sleeping unit doors are equipped with automatic door-closing devices with integral smoke detectors on the unit sides installed in accordance with their listing, provided that the integral detectors perform the required alerting function.

[F] 907.2.6.3 Group I-3 occupancies. Group I-3 occupancies shall be equipped with a manual fire alarm system and automatic smoke detection system installed for alerting staff.

[F] 907.2.6.3.1 System initiation. Actuation of an automatic fire-extinguishing system, *automatic sprinkler system*, a manual fire alarm box or a fire detector shall initiate an approved fire alarm signal that automatically notifies staff.

[F] 907.2.6.3.2 Manual fire alarm boxes. Manual fire alarm boxes are not required to be located in accordance with Section 907.4.2 where the fire alarm boxes are provided at staff-attended locations having direct supervision over areas where manual fire alarm boxes have been omitted.

[F] 907.2.6.3.2.1 Manual fire alarm boxes in detainee areas. Manual fire alarm boxes are allowed to be locked in areas occupied by detainees, provided that staff members are present within the subject area and have keys readily available to operate the manual fire alarm boxes.

[F] 907.2.6.3.3 Automatic smoke detection system. An automatic smoke detection system shall be installed throughout resident housing areas, including *sleeping units* and contiguous day rooms, group activity spaces and other common spaces normally open to residents.

DRAFT

Exceptions:

1. Other *approved* smoke detection arrangements providing equivalent protection, including, but not limited to, placing detectors in exhaust ducts from cells or behind protective guards *listed* for the purpose, are allowed where necessary to prevent damage or tampering.
2. *Sleeping units* in Use Conditions 2 and 3 as described in Section 308.
3. Smoke detectors are not required in *sleeping units* with four or fewer occupants in smoke compartments that are equipped throughout with an *automatic sprinkler system* installed in accordance with Section 903.3.1.1.

[W] 907.2.6.4 Group I-4 occupancies. A manual fire alarm system that initiates the occupant notification signal using an emergency voice/alarm communication system meeting the requirements of Section 907.5.2.2 and installed in accordance with Section 907.6 shall be installed in Group I-4 occupancies. When *automatic sprinkler systems* or smoke detectors are installed, such systems or detectors shall be connected to the building fire alarm system.

Exceptions:

1. A manual fire alarm system is not required in Group I-4 occupancies with an occupant load of 50 or less.
2. Emergency voice alarm communication systems meeting the requirements of Section 907.5.2.2 and installed in accordance with Section 907.6 shall not be required in Group I-4 occupancies with occupant loads of 100 or less, provided that activation of the manual fire alarm system initiates an approved occupant notification signal in accordance with Section 907.5.

[F] 907.2.7 Group M. A manual fire alarm system that activates the occupant notification system in accordance with Section 907.5 shall be installed in Group M occupancies where one of the following conditions exists:

1. The combined Group M *occupant load* of all floors is 500 or more persons.
2. The Group M *occupant load* is more than 100 persons above or below the lowest *level of exit discharge*.

Exceptions:

1. A manual fire alarm system is not required in *covered or open mall buildings* complying with Section 402.
2. Manual fire alarm boxes are not required where the building is equipped throughout with an *automatic sprinkler system* installed in accordance with Section 903.3.1.1 and the occupant notification appliances will automatically activate throughout the notification zones upon sprinkler water flow.

[S] ((~~[F] 907.2.7.1 Occupant notification.~~ ~~During times that the building is occupied, the initiation of a signal from a manual fire alarm box or from a waterflow switch shall not be required to activate the alarm notification appliances when an alarm signal is activated at a *constantly attended location* from which evacuation instructions shall be initiated over an emergency voice/alarm communication system installed in accordance with Section 907.5.2.2.~~))

[F] 907.2.8 Group R-1. Fire alarm systems and smoke alarms shall be installed in Group R-1 occupancies as required in Sections 907.2.8.1 through 907.2.8.3.

[F] 907.2.8.1 Manual fire alarm system. A manual fire alarm system that activates the occupant notification system in accordance with Section 907.5 shall be installed in Group R- 1 occupancies.

Exceptions:

1. A manual fire alarm system is not required in buildings not more than two *stories* in height where all individual *sleeping units* and contiguous *attic* and crawl spaces to those units are separated from each other and public or common areas by not less than 1-hour *fire partitions* and each individual *sleeping unit* has an *exit* directly to a *public way*, *egress court* or *yard*.
2. Manual fire alarm boxes are not required throughout the building where all of the following conditions are met:
   - 2.1. The building is equipped throughout with an *automatic sprinkler system* installed in accordance with Section 903.3.1.1 or 903.3.1.2.
   - 2.2. The notification appliances will activate upon sprinkler water flow.
   - 2.3. Not fewer than one manual fire alarm box is installed at an *approved* location.

[S][F] 907.2.8.2 Automatic ((~~smoke~~)) detection system. An automatic smoke detection system that activates the occupant notification system in accordance with Section 907.5 shall be installed throughout all interior *corridors* serving *sleeping units*. Automatic heat detectors shall be provided in any non-sprinklered interior areas outside guestrooms other than *attics* and crawl spaces.

Exception: An automatic smoke detection system is not required in buildings that do not have interior *corridors* serving *sleeping units* and where each *sleeping unit* has a *means of egress* door opening directly to an *exit* or to an exterior *exit access* that leads directly to an *exit*.

DRAFT

[F] 907.2.8.3 Smoke alarms. Single- and multiple-station smoke alarms shall be installed in accordance with Section 907.2.10.

[S][F] 907.2.9 Group R-2. Fire alarm systems and smoke alarms shall be installed in Group R-2 occupancies as required in Sections 907.2.9.1 through 907.2.9.3.

[F] 907.2.9.1 Manual fire alarm system. A manual fire alarm system that activates the occupant notification system in accordance with Section 907.5 shall be installed in Group R-2 occupancies where any of the following conditions apply:

1. Any *dwelling unit* or *sleeping unit* is located three or more *stories* above the lowest *level of exit discharge*.
2. Any *dwelling unit* or *sleeping unit* is located more than one *story* below the highest *level of exit discharge* of *exits* serving the *dwelling unit* or *sleeping unit*.
3. The building contains more than 16 *dwelling units* or *sleeping units*.
4. The building contains a boarding home licensed by the state of Washington.

Exceptions:

1. A fire alarm system is not required in buildings not more than two *stories* in height where all *dwelling units* or *sleeping units* and contiguous *attic* and crawl spaces are separated from each other and public or common areas by not less than 1-hour *fire partitions* and each *dwelling unit* or *sleeping unit* has an *exit* directly to a *public way*, *egress court* or *yard*.
2. Manual fire alarm boxes are not required where the building is equipped throughout with an *automatic sprinkler system* installed in accordance with Section 903.3.1.1 or 903.3.1.2 and the occupant notification appliances will automatically activate throughout the notification zones upon a sprinkler water flow.
3. A fire alarm system is not required in buildings that do not have interior *corridors* serving *dwelling units* and are protected by an *approved automatic sprinkler system* installed in accordance with Section 903.3.1.1 or 903.3.1.2, provided that *dwelling units* either have a *means of egress* door opening directly to an exterior *exit access* that leads directly to the *exits* or are served by open-ended *corridors* designed in accordance with Section 1027.6, Exception 3.
4. A fire alarm system is not required in townhouses where approved by the *fire code official*.
5. In boarding homes licensed by the state of Washington, manual fire alarm boxes in resident sleeping areas are not required at exits if located at all constantly attended staff locations if such staff locations are visible, continuously accessible, located on each floor, and positioned so no portion of the *story* exceeds a horizontal travel distance of 200 feet to a manual fire alarm box.

[F] 907.2.9.2 Smoke alarms. Single- and multiple-station smoke alarms shall be installed in accordance with Section 907.2.10.

[F] 907.2.9.3 Group R-2 college and university buildings. An automatic smoke detection system that activates the occupant notification system in accordance with Section 907.5 shall be installed in Group R-2 occupancies operated by a college or university for student or staff housing in all of the following locations:

1. Common spaces outside of *dwelling units* and *sleeping units*.
2. Laundry rooms, mechanical equipment rooms and storage rooms.
3. All interior corridors serving *sleeping units* or *dwelling units*.

Exception: An automatic smoke detection system is not required in buildings that do not have interior *corridors* serving *sleeping units* or *dwelling units* and where each *sleeping unit* or *dwelling unit* either has a *means of egress* door opening directly to an exterior *exit access* that leads directly to an *exit* or a *means of egress* door opening directly to an *exit*.

Required smoke alarms in *dwelling units* and *sleeping units* in Group R-2 occupancies operated by a college or university for student or staff housing shall be interconnected with the fire alarm system in accordance with NFPA 72.

[S] 907.2.9.4 Automatic heat detection. An automatic heat detection system that activates the occupant notification system in accordance with Section 907.6 shall be installed throughout all unsprinklered interior areas outside dwelling or sleeping units other than *attics* and crawl spaces.

[F] 907.2.10 Single- and multiple-station smoke alarms. *Listed* single- and multiple-station smoke alarms complying with UL 217 shall be installed in accordance with Sections 907.2.10.1 through 907.2.10.7 and NFPA 72.

[F] 907.2.10.1 Group R-1. Single- or multiple-station smoke alarms shall be installed in all of the following locations in Group R-1:

1. In sleeping areas.
2. In every room in the path of the *means of egress* from the sleeping area to the door leading from the *sleeping unit*.

DRAFT

3. In each *story* within the *sleeping unit*, including basements. For *sleeping units* with split levels and without an intervening door between the adjacent levels, a smoke alarm installed on the upper level shall suffice for the adjacent lower level provided that the lower level is less than one full *story* below the upper level.

[S][F] 907.2.10.2 Groups R-2, R-3 ((~~, R-4~~)) and I-1. Single- or multiple-station smoke alarms shall be installed and maintained in Groups R-2, R-3 ((~~, R-4~~)) and I-1 regardless of *occupant load* at all of the following locations:

1. On the ceiling or wall outside of each separate sleeping area in the immediate vicinity of bedrooms.
2. In each room used for sleeping purposes.
3. In each *story* within a *dwelling unit*, including basements but not including crawl spaces and uninhabitable *attics*. In *dwellings* or *dwelling units* with split levels and without an intervening door between the adjacent levels, a smoke alarm installed on the upper level shall suffice for the adjacent lower level provided that the lower level is less than one full *story* below the upper level.

[F] 907.2.10.3 Installation near cooking appliances. Smoke alarms shall not be installed in the following locations unless this would prevent placement of a smoke alarm in a location required by Section 907.2.10.1 or 907.2.10.2:

1. Ionization smoke alarms shall not be installed less than 20 feet (6096 mm) horizontally from a permanently installed cooking appliance.
2. Ionization smoke alarms with an alarm-silencing switch shall not be installed less than 10 feet (3048 mm) horizontally from a permanently installed cooking appliance.
3. Photoelectric smoke alarms shall not be installed less than 6 feet (1829 mm) horizontally from a permanently installed cooking appliance.

[F] 907.2.10.4 Installation near bathrooms. Smoke alarms shall be installed not less than 3 feet (914 mm) horizontally from the door or opening of a bathroom that contains a bathtub or shower unless this would prevent placement of a smoke alarm required by Section 907.2.10.1 or 907.2.10.2.

[F] 907.2.10.5 Interconnection. Where more than one smoke alarm is required to be installed within an individual *dwelling unit* or *sleeping unit* in Group R or I-1 occupancies, the smoke alarms shall be interconnected in such a manner that the activation of one alarm will activate all of the alarms in the individual unit. Physical interconnection of smoke alarms shall not be required where listed wireless alarms are installed and all alarms sound upon activation of one alarm. The alarm shall be clearly audible in all bedrooms over background noise levels with all intervening doors closed.

[S][F] 907.2.10.6 Power source. In new construction, required smoke alarms shall receive their primary power from the building wiring where such wiring is served from a commercial source and shall be equipped with a battery backup. Smoke alarms with integral strobes that are not equipped with battery backup shall be connected to an emergency ((~~electrical~~)) power system in accordance with Section 2702. Smoke alarms shall emit a signal when the batteries are low. Wiring shall be permanent and without a disconnecting switch other than as required for overcurrent protection.

Exception: Smoke alarms are not required to be equipped with battery backup where they are connected to an emergency electrical system that complies with Section 2702.

[F] 907.2.10.7 Smoke detection system. Smoke detectors listed in accordance with UL 268 and provided as part of the building *fire alarm system* shall be an acceptable alternative to single- and multiple-station *smoke alarms* and shall comply with the following:

1. The *fire alarm system* shall comply with all applicable requirements in Section 907.
2. Activation of a smoke detector in a *dwelling unit* or *sleeping unit* shall initiate alarm notification in the *dwelling unit* or *sleeping unit* in accordance with Section 907.5.2.
3. Activation of a smoke detector in a *dwelling unit* or *sleeping unit* shall not activate alarm notification appliances outside of the *dwelling unit* or *sleeping unit*, provided that a supervisory signal is generated and monitored in accordance with Section 907.6.6.

[F] 907.2.11 Special amusement buildings. An automatic smoke detection system shall be provided in *special amusement buildings* in accordance with Sections 907.2.11.1 through 907.2.11.3.

[F] 907.2.11.1 Alarm. Activation of any single smoke detector, the *automatic sprinkler system* or any other automatic fire detection device shall immediately activate an audible and visible alarm at the building at a constantly attended location from which emergency action can be initiated, including the capability of manual initiation of requirements in Section 907.2.11.2.

[F] 907.2.11.2 System response. The activation of two or more smoke detectors, a single smoke detector equipped with an alarm verification feature, the *automatic sprinkler system* or other *approved* fire detection device shall automatically do all of the following:

DRAFT

1. Cause illumination of the *means of egress* with light of not less than 1 footcandle (11 lux) at the walking surface level.
2. Stop any conflicting or confusing sounds and visual distractions.
3. Activate an *approved* directional *exit* marking that will become apparent in an emergency.
4. Activate a prerecorded message, audible throughout the *special amusement building*, instructing patrons to proceed to the nearest *exit*. Alarm signals used in conjunction with the prerecorded message shall produce a sound that is distinctive from other sounds used during normal operation.

[F] 907.2.11.3 Emergency voice/alarm communication system. An emergency voice/alarm communication system, which is allowed to serve as a public address system, shall be installed in accordance with Section 907.5.2.2 and be audible throughout the entire *special amusement building*.

[S][F] 907.2.12 High-rise buildings. High-rise buildings shall be provided with an automatic smoke detection system in accordance with Section 907.2.12.1, a fire department communication system in accordance with Section 907.2.12.2 and an emergency voice/alarm communication system in accordance with Section 907.5.2.2.

Exceptions:

1. Airport traffic control towers in accordance with Sections 412 and 907.2.21.
2. *Open parking garages* in accordance with Section 406.5.
3. Buildings with an occupancy in Group A-5 in accordance with Section 303.1.
4. Low-hazard special occupancies in accordance with Section 503.1..1.

((~~5. Buildings with an occupancy in Group H-1, H-2 or H-3 in accordance with Section 415.~~

~~6~~)) 5. In Group I-1 and I-2 occupancies, the alarm shall sound at a *constantly attended location* and occupant notification shall be broadcast by the emergency voice/alarm communication system.

[F] 907.2.12.1 Automatic smoke detection. Automatic smoke detection in high-rise buildings shall be in accordance with Sections 907.2.12.1.1 and 907.2.12.1.2.

[F] 907.2.12.1.1 Area smoke detection. Area smoke detectors shall be provided in accordance with this section. Smoke detectors shall be connected to an automatic fire alarm system. The activation of any detector required by this section shall activate the emergency voice/alarm communication system in accordance with Section 907.5.2.2. In addition to smoke detectors required by Sections 907.2.1 through 907.2.9, smoke detectors shall be located as follows:

1. In each mechanical equipment, electrical, transformer, telephone equipment or similar room that is not provided with sprinkler protection.
2. In each elevator machine room, machinery space, control room and control space and in elevator lobbies.

[F] 907.2.12.1.2 Duct smoke detection. Duct smoke detectors complying with Section 907.3.1 shall be located as follows:

1. In the main return air and exhaust air plenum of each air-conditioning system having a capacity greater than 2,000 cubic feet per minute (cfm) (0.94 m^3/s). Such detectors shall be located in a serviceable area downstream of the last duct inlet.
2. At each connection to a vertical duct or riser serving two or more stories from a return air duct or plenum of an air-conditioning system. In Group R-1 and R-2 occupancies, a smoke detector is allowed to be used in each return air riser carrying not more than 5,000 cfm (2.4 m^3/s) and serving not more than 10 air-inlet openings.

[S][F] 907.2.12.2 Fire department communication system. Where a wired communication system is *approved* in lieu of an emergency responder radio coverage system in accordance with Section 510 of the *International Fire Code*, the wired fire department communication system shall be designed and installed in accordance with NFPA 72 and shall operate between a fire command center complying with Section 911, elevators, elevator lobbies, emergency and standby power rooms, fire pump rooms, *areas of refuge* and inside *interior exit stairways*. The fire department communication device shall be provided at each floor level within the *interior exit stairway*. Eight portable handsets for the communication system shall be provided in the fire command center.

[F] 907.2.12.3 Multiple-channel voice evacuation. In buildings with an occupied floor more than 120 feet (36 576 mm) above the lowest level of fire department vehicle access, voice evacuation systems for high-rise buildings shall be multiple-channel systems.

[F] 907.2.13 Atriums connecting more than two stories. A fire alarm system shall be installed in occupancies with an atrium that connects more than two *stories*, with smoke detection installed in locations required by a rational analysis in Section 909.4 and in accordance with the system operation requirements in Section 909.17. The system shall be activated in

DRAFT

4. Office spaces incidental to the tower operation.
5. Lounges for employees, including sanitary facilities.
6. *Means of egress*.
7. Utility shafts where access to smoke detectors can be provided.

[F] 907.2.22 Battery rooms. An automatic smoke detection system shall be installed in areas containing stationary storage battery systems as required in Section 1206.2 of the *International Fire Code*.

[F] 907.2.23 Capacitor energy storage systems. An automatic smoke detection system shall be installed in areas containing capacitor energy storage systems as required by Section 1206.3 of the *International Fire Code*.

[F] 907.3 Fire safety functions. Automatic fire detectors utilized for the purpose of performing fire safety functions shall be connected to the building's fire alarm control unit where a fire alarm system is required by Section 907.2. Detectors shall, upon actuation, perform the intended function and activate the alarm notification appliances or activate a visible and audible supervisory signal at a *constantly attended location*. In buildings not equipped with a fire alarm system, the automatic fire detector shall be powered by normal electrical service and, upon actuation, perform the intended function. The detectors shall be located in accordance with NFPA 72.

[S][F] 907.3.1 Duct smoke detectors. Smoke detectors installed in ducts shall be *listed* for the air velocity, temperature and humidity present in the duct. Duct smoke detectors shall be connected to the building's fire alarm control unit where a fire alarm system is required by Section 907.2. Activation of a duct smoke detector shall initiate a visible and audible supervisory signal at a *constantly attended location* and shall perform the intended fire safety function in accordance with this code and the *International Mechanical Code*. In facilities that are required to be monitored by a supervising station, duct smoke detectors shall report only as a supervisory signal and not as a fire alarm. They shall not be used as a substitute for required open area detection and shall not activate the occupant notification system.

((~~Exceptions:~~

~~1. The supervisory signal at a *constantly attended location* is not required where duct smoke detectors activate the building's alarm notification appliances.~~

~~2.~~)) **Exception:** In occupancies not required to be equipped with a fire alarm system, actuation of a smoke detector shall activate a visible and an audible signal in an *approved* location. Smoke detector trouble conditions shall activate a visible or audible signal in an *approved* location and shall be identified as air duct detector trouble.

[F] 907.3.2 Special locking systems. Where special locking systems are installed on *means of egress* doors in accordance with Sections 1010.1.9.7 or 1010.1.9.8, an automatic detection system shall be installed as required by that section.

[S][F] 907.3.3 Elevator emergency operation. Automatic fire detectors installed for elevator emergency operation shall be installed in accordance with the provisions of ((~~ASME A17.1/CSA B44 and NFPA 72~~)) rules promulgated by the building or *fire code official*.

[F] 907.3.4 Wiring. The wiring to the auxiliary devices and equipment used to accomplish the fire safety functions shall be monitored for integrity in accordance with NFPA 72.

[F] 907.4 Initiating devices. Where manual or automatic alarm initiation is required as part of a fire alarm system, the initiating devices shall be installed in accordance with Sections 907.4.1 through 907.4.3.1.

[F] 907.4.1 Protection of fire alarm control unit. In areas that are not continuously occupied, a single smoke detector shall be provided at the location of each fire alarm control unit, notification appliance circuit power extenders, and supervising station transmitting equipment.

Exception: Where ambient conditions prohibit installation of a smoke detector, a *heat detector* shall be permitted.

[F] 907.4.2 Manual fire alarm boxes. Where a manual fire alarm system is required by another section of this code, it shall be activated by fire alarm boxes installed in accordance with Sections 907.4.2.1 through 907.4.2.6.

[F] 907.4.2.1 Location. Manual fire alarm boxes shall be located not more than 5 feet (1524 mm) from the entrance to each *exit*. In buildings not protected by an *automatic sprinkler system* in accordance with Section 903.3.1.1 or 903.3.1.2, additional manual fire alarm boxes shall be located so that the distance of travel to the nearest box does not exceed 200 feet (60 960 mm).

[F] 907.4.2.2 Height. The height of the manual fire alarm boxes shall be not less than 42 inches (1067 mm) and not more than 48 inches (1372 mm) measured vertically, from the floor level to the activating handle or lever of the box.

[F] 907.4.2.3 Color. Manual fire alarm boxes shall be red in color.

[F] 907.4.2.4 Signs. Where fire alarm systems are not monitored by a supervising station, an *approved* permanent sign shall be installed adjacent to each manual fire alarm box that reads: WHEN ALARM SOUNDS CALL FIRE DEPARTMENT.

Exception: Where the manufacturer has permanently provided this information on the manual fire alarm box.

DRAFT

[F] 907.4.2.5 Protective covers. The fire code official is authorized to require the installation of *listed* manual fire alarm box protective covers to prevent malicious false alarms or to provide the manual fire alarm box with protection from physical damage. The protective cover shall be transparent or red in color with a transparent face to permit visibility of the manual fire alarm box. Each cover shall include proper operating instructions. A protective cover that emits a local alarm signal shall not be installed unless *approved*. Protective covers shall not project more than that permitted by Section 1003.3.3.

[F] 907.4.2.6 Unobstructed and unobscured. Manual fire alarm boxes shall be provided with ready access, unobstructed, unobscured and visible at all times.

[F] 907.4.3 Automatic smoke detection. Where an automatic smoke detection system is required it shall utilize smoke detectors unless ambient conditions prohibit such an installation. In spaces where smoke detectors cannot be utilized due to ambient conditions, *approved* automatic *heat detectors* shall be permitted.

[F] 907.4.3.1 Automatic sprinkler system. For conditions other than specific fire safety functions noted in Section 907.3, in areas where ambient conditions prohibit the installation of smoke detectors, an *automatic sprinkler system* installed in such areas in accordance with Section 903.3.1.1 or 903.3.1.2 and that is connected to the fire alarm system shall be *approved* as automatic heat detection.

[F] 907.5 Occupant notification systems. A fire alarm system shall annunciate at the fire alarm control unit and shall initiate occupant notification upon activation, in accordance with Sections 907.5.1 through 907.5.2.3.3. Where a fire alarm system is required by another section of this code, it shall be activated by:

1. Automatic fire detectors.
2. *Automatic sprinkler system* waterflow devices.
3. Manual fire alarm boxes.
4. Automatic fire-extinguishing systems.

Exception: Where notification systems are allowed elsewhere in Section 907 to annunciate at a *constantly attended location*.

[F] 907.5.1 Presignal feature. A presignal feature shall not be installed unless *approved* by the fire code official. Where a presignal feature is provided, a signal shall be annunciated at a *constantly attended location approved* by the *fire code official* so that occupant notification can be activated in the event of fire or other emergency.

[F] 907.5.2 Alarm notification appliances. Alarm notification appliances shall be provided and shall be *listed* for their purpose.

[S][F] 907.5.2.1 Audible alarms. Audible alarm notification appliances shall be provided and emit a distinctive sound that is not to be used for any purpose other than that of a fire alarm.

Exceptions:

1. Audible alarm notification appliances are not required in critical care areas of Group I-2, Condition 2 occupancies that are in compliance with Section 907.2.6, Exception 2.
2. A visible alarm notification appliance installed in a nurses' control station or other continuously attended staff location in a Group I-2, Condition 2 suite shall be an acceptable alternative to the installation of audible alarm notification appliances throughout the suite in Group I-2, Condition 2 occupancies that are in compliance with Section 907.2.6, Exception 2.
3. Where provided, audible notification appliances located in each enclosed occupant evacuation elevator lobby in accordance with Section ((~~3008.9.1~~)) 403.6.2.10.1 shall be connected to a separate notification zone for manual paging only.

[S][F] 907.5.2.1.1 Average sound pressure. The audible alarm notification appliances shall provide a sound pressure level of 15 decibels (dBA) above the average ambient sound level or 5 dBA above the maximum sound level having a duration of not less than 60 seconds, whichever is greater, in every occupiable space within the building. The minimum sound pressure levels shall be: 75 dBA in occupancies in Groups R and I-Condition 1; 90 dBA in mechanical equipment rooms; and 60 dBA in other occupancies.

Exceptions:

1. Private mode signaling in accordance with NFPA 72 is allowed in areas of I-2 and I-3 occupancies if occupants are not expected to self-evacuate.
2. Alarm systems installed in selected parts of a building are required to meet sound pressure requirements within the selected area of the building only.

[W][S][F] 907.5.2.1.2 ((~~Maximum~~)) Total sound pressure. The ((~~maximum~~)) total sound pressure level ((~~for audible alarm~~)) produced by combining the ambient sound pressure level with all audible notification appliances operating shall ((~~be~~)) not exceed 110 dBA at the minimum hearing distance from the audible appliance. Where the average ambi-

DRAFT

ent noise is greater than ((~~95~~)) 105 dBA, visible alarm notification appliances shall be provided in accordance with NFPA 72 and audible alarm notification appliances shall not be required.

[F] 907.5.2.2 Emergency voice/alarm communication systems. Emergency voice/alarm communication systems required by this code shall be designed and installed in accordance with NFPA 72. The operation of any automatic fire detector, sprinkler waterflow device or manual fire alarm box shall automatically sound an alert tone followed by voice instructions giving *approved* information and directions for a general or staged evacuation in accordance with the building's fire safety and evacuation plans required by Section 404 of the *International Fire Code*. In high-rise buildings, the system shall operate on at least the alarming floor, the floor above and ((~~the floor~~)) 2 floors below. Speakers shall be provided throughout the building by paging zones. At a minimum, paging zones shall be provided as follows:

1. Elevator groups.
2. *Interior exit stairways*.
3. Each floor.
4. *Areas of refuge* as defined in Chapter 2.

Exception: In Group I-1 and I-2 occupancies, the alarm shall sound in a constantly attended area and a general occupant notification shall be broadcast over the overhead page.

[F] 907.5.2.2.1 Manual override. A manual override for emergency voice communication shall be provided on a selective and all-call basis for all paging zones.

[F] 907.5.2.2.2 Live voice messages. The emergency voice/alarm communication system shall have the capability to broadcast live voice messages by paging zones on a selective and all-call basis.

[F] 907.5.2.2.3 Alternative uses. The emergency voice/alarm communication system shall be allowed to be used for other announcements, provided that the manual fire alarm use takes precedence over any other use.

[F] 907.5.2.2.4 Emergency voice/alarm communication captions. Where stadiums, arenas and grandstands have 15,000 fixed seats or more and provide audible public announcements, the emergency voice/alarm communication system shall provide prerecorded or real-time captions. Prerecorded or live emergency captions shall be from an *approved* location constantly attended by personnel trained to respond to an emergency.

[F] 907.5.2.2.5 Emergency power. Emergency voice/alarm communications systems shall be provided with emergency power in accordance with Section 2702. The system shall be capable of powering the required load for a duration of not less than 24 hours, as required in NFPA 72.

[S][F] 907.5.2.3 Visible alarms. Visible alarm notification appliances shall be provided in accordance with Sections 907.5.2.3.1 through 907.5.2.3.3 and rules promulgated by the *building official* or *fire code official*.

Exceptions:

1. Visible alarm notification appliances are not required in *alterations*, except where an existing fire alarm system is upgraded or replaced, or a new fire alarm system is installed.
2. Visible alarm notification appliances shall not be required in *exits* as defined in Chapter 2.
3. Visible alarm notification appliances shall not be required in elevator cars.
4. Visual alarm notification appliances are not required in critical care areas of Group I-2, Condition 2 occupancies that are in compliance with Section 907.2.6, Exception 2.

[F] 907.5.2.3.1 Public use areas and common use areas. Visible alarm notification appliances shall be provided in *public use areas* and *common use areas*.

Exception: Where employee work areas have audible alarm coverage, the notification appliance circuits serving the employee work areas shall be initially designed with not less than 20-percent spare capacity to account for the potential of adding visible notification appliances in the future to accommodate hearing-impaired employee(s).

[F] 907.5.2.3.2 Groups I-1 and R-1. Habitable spaces in dwelling units and sleeping units in Group I-1 and R-1 occupancies in accordance with Table 907.5.2.3.2 shall be provided with visible alarm notification. Visible alarms shall be activated by the in-room smoke alarm and the building fire alarm system.

DRAFT

[F] TABLE 907.5.2.3.2
VISIBLE ALARMS

NUMBER OF SLEEP UNITS	SLEEPING ACCOMMODATIONS WITH VISIBLE ALARMS
6 to 25	2
26 to 50	4
51 to 75	7
76 to 100	9
101 to 150	12
151 to 200	14
201 to 300	17
301 to 400	20
401 to 500	22
501 to 1,000	5% of total
1,001 and over	50 plus 3 for each 100 over 1,000

[F] 907.5.2.3.3 Group R-2. In Group R-2 occupancies required by Section 907 to have a fire alarm system, each *story* that contains *dwelling units* and *sleeping units* shall be provided with the capability to support visible alarm notification appliances in accordance with Chapter 10 of ICC A117.1. Such capability shall accommodate wired or wireless equipment. The future capability shall include one of the following:

1. The interconnection of the building fire alarm system with the unit smoke alarms.
2. The replacement of audible appliances with combination audible/visible appliances.
3. The future extension of the existing wiring from the unit smoke alarm locations to required locations for visible appliances.

[F] 907.6 Installation and monitoring. A fire alarm system shall be installed and monitored in accordance with Sections 907.6.1 through 907.6.6.2 and NFPA 72.

[S][F] 907.6.1 Wiring. Wiring shall comply with the requirements of ((~~NFPA 70~~)) the *Seattle Electrical Code* and NFPA 72. Wireless protection systems utilizing radio-frequency transmitting devices shall comply with the special requirements for supervision of low-power wireless systems in NFPA 72.

[F] 907.6.2 Power supply. The primary and secondary power supply for the fire alarm system shall be provided in accordance with NFPA 72.

Exception: Back-up power for single-station and multiple-station smoke alarms as required in Section 907.2.10.6.

[F] 907.6.3 Initiating device identification. The fire alarm system shall identify the specific initiating device address, location, device type, floor level where applicable and status including indication of normal, alarm, trouble and supervisory status, as appropriate.

Exceptions:

1. Fire alarm systems in single-story buildings less than 22,500 square feet (2090 m^2) in area.
2. Fire alarm systems that only include manual fire alarm boxes, waterflow initiating devices and not more than 10 additional alarm-initiating devices.
3. Special initiating devices that do not support individual device identification.
4. Fire alarm systems or devices that are replacing existing equipment.

[F] 907.6.3.1 Annunciation. The initiating device status shall be annunciated at an *approved* on-site location.

[F] 907.6.4 Zones. Each floor shall be zoned separately and a zone shall not exceed 22,500 square feet (2090 m^2). The length of any zone shall not exceed 300 feet (91 440 mm) in any direction.

Exception: *Automatic sprinkler system* zones shall not exceed the area permitted by NFPA 13.

[S][F] 907.6.4.1 ((~~Zoning indicator~~)) Annunciator panel. ((~~A zoning indicator panel and the associated controls shall be provided in an *approved* location.~~)) All fire alarm systems in buildings without a fire command center shall be provided with an annunciator panel (or the main fire alarm control panel) located inside the building at the main building entrance. The visual zone indication shall lock in until the system is reset and shall not be canceled by the operation of an audible-alarm silencing switch.

DRAFT

[F] 907.6.4.2 High-rise buildings. In high-rise buildings, a separate zone by floor shall be provided for each of the following types of alarm-initiating devices where provided:

1. Smoke detectors.
2. Sprinkler waterflow devices.
3. Manual fire alarm boxes.
4. Other *approved* types of automatic fire detection devices or suppression systems.

[F] 907.6.5 Access. Access shall be provided to each fire alarm device and notification appliance for periodic inspection, maintenance and testing.

[S][F] 907.6.6 Monitoring. Fire alarm systems required by this chapter or by the *International Fire Code* shall be monitored by an *approved* supervising station in accordance with NFPA 72.

Exception: Monitoring by a supervising station is not required for:

1. Single- and multiple-station smoke alarms required by Section 907.2.10.
2. Smoke detectors in Group I-3 occupancies.
3. *Automatic sprinkler systems* in one- and two-family dwellings and townhouses.

[F] 907.6.6.1 Automatic telephone-dialing devices. Automatic telephone-dialing devices used to transmit an emergency alarm shall not be connected to any fire department telephone number unless *approved* by the fire chief.

[F] 907.6.6.2 Termination of monitoring service. Termination of fire alarm monitoring services shall be in accordance with Section 901.9 of the *International Fire Code*.

[S][F] 907.7 Acceptance tests and completion. Upon completion of the installation, and after the electrical inspector has approved the installation, the fire alarm system and all fire alarm components shall be tested in accordance with NFPA 72.

[F] 907.7.1 Single- and multiple-station alarm devices. When the installation of the alarm devices is complete, each device and interconnecting wiring for multiple-station alarm devices shall be tested in accordance with the smoke alarm provisions of NFPA 72.

[F] 907.7.2 Record of completion. A record of completion in accordance with NFPA 72 verifying that the system has been installed and tested in accordance with the *approved* plans and specifications shall be provided.

[F] 907.7.3 Instructions. Operating, testing and maintenance instructions and record drawings ("as-builts") and equipment specifications shall be provided at an *approved* location.

[F] 907.8 Inspection, testing and maintenance. The maintenance and testing schedules and procedures for fire alarm and fire detection systems shall be in accordance with Section 907.8 of the *International Fire Code*.

DRAFT

SECTION 908
EMERGENCY ALARM SYSTEMS

[F] 908.1 Group H occupancies. Emergency alarms for the detection and notification of an emergency condition in Group H occupancies shall be provided in accordance with Section 415.5.

[F] 908.2 Group H-5 occupancy. Emergency alarms for notification of an emergency condition in an HPM facility shall be provided as required in Section 415.11.3.5. *

SECTION 909
SMOKE CONTROL SYSTEMS

[F] 909.1 Scope and purpose. This section applies to mechanical or passive smoke control systems where they are required by other provisions of this code. The purpose of this section is to establish minimum requirements for the design, installation and acceptance testing of smoke control systems that are intended to provide a tenable environment for the evacuation or relocation of occupants. These provisions are not intended for the preservation of contents, the timely restoration of operations or for assistance in fire suppression or overhaul activities. Smoke control systems regulated by this section serve a different purpose than the smoke- and heat-removal provisions found in Section 910. Mechanical smoke control systems shall not be considered exhaust systems under Chapter 5 of the *International Mechanical Code*.

[F] 909.2 General design requirements. Buildings, structures or parts thereof required by this code to have a smoke control system or systems shall have such systems designed in accordance with the applicable requirements of Section 909 and the generally accepted and well-established principles of engineering relevant to the design. The *construction documents* shall include sufficient information and detail to adequately describe the elements of the design necessary for the proper implementation of

Exceptions:

1. Passive smoke control systems with automatic-closing devices actuated by spot-type smoke detectors *listed* for releasing service installed in accordance with Section 907.3.
2. Fixed openings between smoke zones that are protected utilizing the airflow method.
3. In Group I-1, Condition 2; Group I-2; and ambulatory care facilities, where a pair of opposite-swinging doors are installed across a corridor in accordance with Section 909.5.3.1, the doors shall not be required to be protected in accordance with Section 716. The doors shall be close-fitting within operational tolerances and shall not have a center mullion or undercuts in excess of 3/4 inch (19.1 mm), louvers or grilles. The doors shall have head and jamb stops and astragals or rabbets at meeting edges and, where permitted by the door manufacturer's listing, positive-latching devices are not required.
4. In Group I-2 and ambulatory care facilities, where such doors are special-purpose horizontal sliding, accordion or folding door assemblies installed in accordance with Section 1010.1.4.3 and are automatic closing by smoke detection in accordance with Section 716.2.6.5.
5. Group I-3.
6. Openings between smoke zones with clear ceiling heights of 14 feet (4267 mm) or greater and bank-down capacity of greater than 20 minutes as determined by the design fire size.

909.5.3.1 Group I-1, Condition 2; Group I-2; and ambulatory care facilities. In Group I-1, Condition 2; Group I-2; and *ambulatory care facilities*, where doors are installed across a *corridor*, the doors shall be automatic closing by smoke detection in accordance with Section 716.2.6.5 and shall have a vision panel with fire-protection-rated glazing materials in fire protection-rated frames, the area of which shall not exceed that tested.

[F] 909.5.3.2 Ducts and air transfer openings. Ducts and air transfer openings are required to be protected with a minimum Class II, 250°F (121°C) *smoke damper* complying with Section 717.

[F] 909.6 Pressurization method. The primary mechanical means of controlling smoke shall be by pressure differences across smoke barriers. Maintenance of a tenable environment is not required in the smoke control zone of fire origin.

[F] 909.6.1 Minimum pressure difference. The pressure difference across a *smoke barrier* used to separate smoke zones shall be not less than 0.05-inch water gage (0.0124 kPa) in fully sprinklered buildings.

In buildings permitted to be other than fully sprinklered, the smoke control system shall be designed to achieve pressure differences not less than two times the maximum calculated pressure difference produced by the design fire.

[F] 909.6.2 Maximum pressure difference. The maximum air pressure difference across a *smoke barrier* shall be determined by required door-opening or closing forces. The actual force required to open *exit* doors when the system is in the smoke control mode shall be in accordance with Section 1010.1.3. Opening and closing forces for other doors shall be determined by standard engineering methods for the resolution of forces and reactions. The calculated force to set a side-hinged, swinging door in motion shall be determined by:

$F = F_{dc} + K(WA\Delta P)/2(W\text{-}d)$ **(Equation 9-1)**

where:

A = Door area, square feet (m^2).

d = Distance from door handle to latch edge of door, feet (m).

F = Total door opening force, pounds (N).

F_{dc} = Force required to overcome closing device, pounds (N).

K = Coefficient 5.2 (1.0).

W = Door width, feet (m).

ΔP = Design pressure difference, inches of water (Pa).

[F] 909.6.3 Pressurized stairways and elevator hoistways. Where stairways or elevator hoistways are pressurized, such pressurization systems shall comply with Section 909 as smoke control systems, in addition to the requirements of Sections 909.20 ((~~of this code~~)) and 909.21. ((~~of the *International Fire Code*.~~))

[F] 909.7 Airflow design method. Where *approved* by the fire code official, smoke migration through openings fixed in a permanently open position, which are located between smoke control zones by the use of the airflow method, shall be permitted. The design airflow shall be in accordance with this section. Airflow shall be directed to limit smoke migration from the fire zone. The geometry of openings shall be considered to prevent flow reversal from turbulent effects. Smoke control systems using the airflow method shall be designed in accordance with NFPA 92.

[F] 909.7.1 Prohibited conditions. This method shall not be employed where either the quantity of air or the velocity of the airflow will adversely affect other portions of the smoke control system, unduly intensify the fire, disrupt plume dynamics or

DRAFT

[S][F] 909.11 ((~~Standby~~)) Emergency power. Smoke control systems shall be provided with ((~~standby~~)) emergency power in accordance with Section 2702.

Exceptions:

1. Stairway pressurization systems for non-high rise buildings shall be provided with legally-required standby power in accordance with Section 909.20.5.6.
2. Hoistway pressurization systems for non-high rise buildings shall be provided with legally-required standby power in accordance with Section 909.21.6.

[S] 909.11.1 Equipment room. The ((~~standby~~)) emergency power source and its transfer switches shall be in a room separate from the normal power transformers and switch gears and ventilated directly to and from the exterior. The room shall be enclosed with not less than 1-hour *fire barriers* constructed in accordance with Section 707 or *horizontal assemblies* constructed in accordance with Section 711, or both.

Exceptions:

1. Where located within a sprinklered parking garage of Type I or II construction, emergency power and *legally required standby power systems* with fixed fuel quantities meeting the limits of Section 603.3 of the International Fire Code, and their transfer switches, are not required to be in a separate room. Other occupancies located in the *story* where the system is located shall be separated from the system by fire barriers with a minimum 1 hour fire-resistance rating.
2. Combustion and radiator intake air are permitted to be transferred from the adjacent garage. Radiator discharge air is permitted to be transferred to the adjacent garage. Radiator ventilation intake and discharge air locations shall be separated to maintain the radiator ventilation intake air temperature below the maximum temperature allowed to meet the emergency and *legally required standby power system* loads.

[S][F] 909.11.2 Power sources and power surges. Elements of the smoke control system relying on volatile memories or the like shall be supplied with uninterruptable power sources of sufficient duration to span 15-minute primary power interruption. Elements of the smoke control system susceptible to power surges shall be suitably protected by conditioners, suppressors or other *approved* means.

909.11.3 Wiring. In addition to meeting requirements of the Seattle Electrical Code, all wiring regardless of voltage, shall have fire-resistance-rated protection of at least two hours or as required in rules promulgated by the *building official*.

Exception: Subject to the approval of the *building official*, fire-resistance rating is not required for wiring located in a parking garage.

[S][F] 909.12 Detection and control systems. Fire detection systems providing control input or output signals to mechanical smoke control systems or elements thereof shall comply with the requirements of Section 907. Such systems shall be equipped with a control unit complying with UL 864 and *listed* as smoke control equipment.

909.12.1 Verification. Control systems for mechanical smoke control systems shall include provisions for verification. Verification shall include positive confirmation of actuation, testing, manual override and the presence of power downstream of all disconnects. A preprogrammed weekly test sequence shall report abnormal conditions audibly, visually and by printed report. The preprogrammed weekly test shall operate all devices, equipment and components used for smoke control.

Exceptions:

1. Where verification of individual components tested through the preprogrammed weekly testing sequence will interfere with, and produce unwanted effects to, normal building operation, such individual components are permitted to be bypassed from the preprogrammed weekly testing, where *approved* by the building official and in accordance with both of the following:
   1.1. Where the operation of components is bypassed from the preprogrammed weekly test, presence of power downstream of all disconnects shall be verified weekly by a listed control unit.
   1.2. Testing of all components bypassed from the preprogrammed weekly test shall be in accordance with Section 909.20.6 of the *International Fire Code*.
2. Weekly testing is not required for stairway and hoistway pressurization systems.

[F] 909.12.2 Wiring. ((~~In addition to meeting requirements of NFPA 70, all wiring, regardless of voltage, shall be fully enclosed within continuous raceways.~~)) See Section 909.11.3.

[F] 909.12.3 Activation. Smoke control systems shall be activated in accordance with this section.

[F] 909.12.3.1 Pressurization, airflow or exhaust method. Mechanical smoke control systems using the pressurization, airflow or exhaust method shall have completely automatic control.

[F] 909.12.3.2 Passive method. Passive smoke control systems actuated by *approved* spot-type detectors *listed* for releasing service shall be permitted.

DRAFT

[F] 909.12.4 Automatic control. Where completely automatic control is required or used, the automatic-control sequences shall be initiated from an appropriately zoned *automatic sprinkler system* complying with Section 903.3.1.1, manual controls provided with *ready access* for the fire department and any smoke detectors. ((~~required by engineering analysis.~~))

[F] 909.13 Control air tubing. Control air tubing shall be of sufficient size to meet the required response times. Tubing shall be flushed clean and dry prior to final connections and shall be adequately supported and protected from damage. Tubing passing through concrete or masonry shall be sleeved and protected from abrasion and electrolytic action.

[F] 909.13.1 Materials. Control-air tubing shall be hard-drawn copper, Type L, ACR in accordance with ASTM B42, ASTM B43, ASTM B68, ASTM B88, ASTM B251 and ASTM B280. Fittings shall be wrought copper or brass, solder type in accordance with ASME B16.18 or ASME B16.22. Changes in direction shall be made with appropriate tool bends. Brass compression-type fittings shall be used at final connection to devices; other joints shall be brazed using a BCuP-5 brazing alloy with solidus above 1,100°F (593°C) and liquids below 1,500°F (816°C). Brazing flux shall be used on copper-to-brass joints only.

Exception: Nonmetallic tubing used within control panels and at the final connection to devices provided that all of the following conditions are met:

1. Tubing shall comply with the requirements of Section 602.2.1.3 of the *International Mechanical Code*.
2. Tubing and connected devices shall be completely enclosed within a galvanized or paint-grade steel enclosure having a minimum thickness of 0.0296 inch (0.7534 mm) (No. 22 gage). Entry to the enclosure shall be by copper tubing with a protective grommet of neoprene or Teflon or by suitable brass compression to male barbed adapter.
3. Tubing shall be identified by appropriately documented coding.
4. Tubing shall be neatly tied and supported within the enclosure. Tubing bridging cabinets and doors or moveable devices shall be of sufficient length to avoid tension and excessive stress. Tubing shall be protected against abrasion. Tubing connected to devices on doors shall be fastened along hinges.

[F] 909.13.2 Isolation from other functions. Control tubing serving other than smoke control functions shall be isolated by automatic isolation valves or shall be an independent system.

[F] 909.13.3 Testing. Control air tubing shall be tested at three times the operating pressure for not less than 30 minutes without any noticeable loss in gauge pressure prior to final connection to devices.

[F] 909.14 Marking and identification. The detection and control systems shall be clearly marked at all junctions, accesses and terminations.

[F] 909.15 Control diagrams. Identical control diagrams showing all devices in the system and identifying their location and function shall be maintained current and kept on file with the fire code official, the fire department and in the fire command center in a format and manner *approved* by the *fire code official*.

[S][F] 909.16 Fire fighter's smoke control panel. A fire fighter's smoke control panel for fire department emergency response purposes only shall be provided and shall include manual control or override of automatic control for mechanical smoke control systems. The panel shall be located in a fire command center complying with Section 911 in high-rise buildings or buildings with smoke-protected assembly seating. In all other buildings, the fire fighter's smoke control panel shall be installed in an *approved* location adjacent to the fire alarm control panel. The fire fighter's smoke control panel shall comply with Sections 909.16.1 through 909.16.3. The smoke control panel for high rise buildings shall include a visual depiction of the building showing typical floor plan(s) with locations of interior exit stairways and elevator hoistways. The panel shall also include section views of the building to show the extent of travel for each interior exit stairway and elevator. Interior exit stairways and elevator hoistways shall be labeled on the plan section views to match the labeling used in the building itself.

Exception: For buildings that use only stairway and elevator hoistway pressurization for smoke control, pressurization fan status and controls in accordance with Section 909.16.2 (or equivalent) may be installed on the main fire alarm control panel (FACP) in lieu of installing a dedicated fire-fighter's smoke control panel. The building graphics normally provided on the smoke control panel shall be laminated and mounted in the vicinity of the FACP for quick reference by emergency responders.

Note: This exception may be applied to ventilation systems other than interior exit stairway supply air systems to exhaust air from adjacent space.

[S][F] 909.16.1 Smoke control systems. Fans within the building shall be shown on the fire fighter's control panel. Fan control switches shall be located on the panel in the vicinity of the location where the shaft supplied by each fan is depicted. A clear indication of the direction of airflow and the relationship of components shall be displayed. Status indicators shall be provided for all ((~~smoke control equipment, annunciated by fan and zone, and by pilot-lamp-type indicators~~)) fans as follows:

1. Fans ((~~, *dampers* and other operating equipment~~)) in ((~~their normal~~)) a ready/non-operating status—WHITE.
2. Fans ((~~, *dampers* and other operating equipment~~)) in their off ((~~or closed~~)) status—RED.
3. Fans ((~~, *dampers* and other operating equipment~~)) in ((~~their on or open status~~)) operation—GREEN.

DRAFT

4. Fans ((~~, *dampers* and other operating equipment~~)) in a fault ((~~status~~)) condition—YELLOW/AMBER.

[F] 909.16.2 Smoke control panel. The fire fighter's control panel shall provide control capability over the complete smoke control system equipment within the building as follows:

1. ON-AUTO-OFF control over each ((~~individual piece of operating smoke control equipment that can be controlled from other sources within the building~~)) shaft pressurization fan. ((~~This includes *stairway* pressurization fans; smoke exhaust fans; supply, return and exhaust fans; elevator shaft fans and other operating equipment used or intended for smoke control purposes.~~
2. ~~OPEN-AUTO-CLOSE control over individual *dampers* relating to smoke control and that are controlled from other sources within the building.~~))
2. AUTO-OFF-POSITIVE PRESSURE-NEGATIVE PRESSURE control over each smoke control zone designed with such features. Individual control of each damper and fan used to achieve the positive or negative pressure condition is not required.

((~~3. ON-OFF or OPEN-CLOSE control over smoke control and other critical equipment associated with a fire or smoke emergency and that can only be controlled from the fire fighter's control panel.~~))

3. AUTO-EXHAUST-OFF control over each smoke control zone using the exhaust method of smoke control.

Exceptions:

1. Complex systems, where *approved*, where the controls and indicators are combined to control and indicate all elements of a single smoke zone as a unit.
2. Complex systems, where *approved*, where the control is accomplished by computer interface using *approved*, plain English commands.

[F] 909.16.3 Control action and priorities. The fire-fighter's control panel actions shall be as follows:

1. ON-OFF and OPEN-CLOSE control actions shall have the highest priority of any control point within the building. Once issued from the fire fighter's control panel, automatic or manual control from any other control point within the building shall not contradict the control action. Where automatic means are provided to interrupt normal, nonemergency equipment operation or produce a specific result to safeguard the building or equipment including, but not limited to, duct freezestats, duct smoke detectors, high-temperature cutouts, temperature-actuated linkage and similar devices, such means shall be capable of being overridden by the fire fighter's control panel. The last control action as indicated by each fire fighter's control panel switch position shall prevail. Control actions shall not require the smoke control system to assume more than one configuration at any one time.

   Exception: Power disconnects required by ((~~NFPA 70~~)) the Seattle Electrical Code.
2. Only the AUTO position of each three-position fire-fighter's control panel switch shall allow automatic or manual control action from other control points within the building. The AUTO position shall be the NORMAL, nonemergency, building control position. Where a fire fighter's control panel is in the AUTO position, the actual status of the device (on, off, open, closed) shall continue to be indicated by the status indicator described in Section 909.16.1. Where directed by an automatic signal to assume an emergency condition, the NORMAL position shall become the emergency condition for that device or group of devices within the zone. Control actions shall not require the smoke control system to assume more than one configuration at any one time.

[F] 909.17 System response time. Smoke-control system activation shall be initiated immediately after receipt of an appropriate automatic or manual activation command. Smoke control systems shall activate individual components (such as *dampers* and fans) in the sequence necessary to prevent physical damage to the fans, *dampers*, ducts and other equipment. For purposes of smoke control, the fire fighter's control panel response time shall be the same for automatic or manual smoke control action initiated from any other building control point. The total response time, including that necessary for detection, shutdown of operating equipment and smoke control system startup, shall allow for full operational mode to be achieved before the conditions in the space exceed the design smoke condition. The system response time for each component and their sequential relationships shall be detailed in the required rational analysis and verification of their installed condition reported in the required final report.

[S][F] 909.18 Acceptance testing. Devices, equipment, components and sequences shall be individually tested. These tests, in addition to those required by other provisions of this code, shall consist of determination of function, sequence and, where applicable, capacity of their installed condition.

[F] 909.18.1 Detection devices. Smoke or fire detectors that are a part of a smoke control system shall be tested in accordance with Chapter 9 in their installed condition. Where applicable, this testing shall include verification of airflow in both minimum and maximum conditions.

[F] 909.18.2 Ducts. Ducts that are part of a smoke control system shall be traversed using generally accepted practices to determine actual air quantities.

[F] 909.18.3 Dampers. *Dampers* shall be tested for function in their installed condition.

DRAFT

[F] 909.18.4 Inlets and outlets. Inlets and outlets shall be read using generally accepted practices to determine air quantities.

[F] 909.18.5 Fans. Fans shall be examined for correct rotation. Measurements of voltage, amperage, revolutions per minute (rpm) and belt tension shall be made.

[F] 909.18.6 Smoke barriers. Measurements using inclined manometers or other *approved* calibrated measuring devices shall be made of the pressure differences across *smoke barriers*. Such measurements shall be conducted for each possible smoke control condition.

[F] 909.18.7 Controls. Each smoke zone equipped with an automatic-initiation device shall be put into operation by the actuation of one such device. Each additional device within the zone shall be verified to cause the same sequence without requiring the operation of fan motors in order to prevent damage. Control sequences shall be verified throughout the system, including verification of override from the fire fighter's control panel and simulation of standby power conditions.

[F] 909.18.8 Testing for smoke control. Smoke control systems shall be tested by a special inspector for compliance with the *approved* design in accordance with Section 1705.18.

[F] 909.18.8.1 Scope of testing. Testing shall be conducted ((~~in accordance with the following:~~)) prior to occupancy and after sufficient completion for the purposes of pressure-difference testing, flow measurements, and detection and control verification.

((~~1. During erection of ductwork and prior to concealment for the purposes of leakage testing and recording of device location.~~

~~2. Prior to occupancy and after sufficient completion for the purposes of pressure-difference testing, flow measurements, and detection and control verification.~~))

[F] 909.18.8.2 Qualifications. *Approved* agencies for smoke control testing shall have expertise in fire protection engineering, mechanical engineering and certification as air balancers.

[F] 909.18.8.3 Reports. A complete report of testing shall be prepared by the *approved* agency. The report shall include identification of all devices by manufacturer, nameplate data, design values, measured values and identification tag or *mark*. The report shall be reviewed by the responsible *registered design professional* and, when satisfied that the design intent has been achieved, the responsible *registered design professional* shall sign, seal and date the report.

[F] 909.18.8.3.1 Report filing. A copy of the final report ((~~shall be filed with the fire code official and an identical copy~~)) shall be maintained in an *approved* location at the building and shall be made available to the fire department on request.

[F] 909.18.9 Identification and documentation. Charts, drawings and other documents identifying and locating each component of the smoke control system, and describing its proper function and maintenance requirements, shall be maintained on file at the building as an attachment to the report required by Section 909.18.8.3. Devices shall have an *approved* identifying tag or *mark* on them consistent with the other required documentation and shall be dated indicating the last time they were successfully tested and by whom.

[F] 909.19 System acceptance. Buildings, or portions thereof, required by this code to comply with this section shall not be issued a certificate of occupancy until such time that the fire code official determines that the provisions of this section have been fully complied with and that the fire department has received satisfactory instruction on the operation, both automatic and manual, of the system and a written maintenance program complying with the requirements of Section ((~~909.20.1~~)) 909.20 of the *International Fire Code* has been submitted and approved by the fire code official.

Exception: In buildings of phased construction, a temporary certificate of occupancy, as *approved* by the ((~~fire code~~)) *building official*, shall be allowed provided that those portions of the building to be occupied meet the requirements of this section and that the remainder does not pose a significant hazard to the safety of the proposed occupants or adjacent buildings.

((~~**909.20 Smokeproof enclosures.** Where required by Section 1023.11, a smokeproof enclosure shall be constructed in accordance with this section. A smokeproof enclosure shall consist of an *interior exit stairway* or *ramp* that is enclosed in accordance with the applicable provisions of Section 1023 and an open exterior balcony or ventilated vestibule meeting the requirements of this section. Where access to the roof is required by the *International Fire Code*, such access shall be from the smokeproof enclosure where a smokeproof enclosure is required.~~

~~**909.20.1 Access.** Access to the *stairway* or *ramp* shall be by way of a vestibule or an open exterior balcony. The minimum dimension of the vestibule shall be not less than the required width of the *corridor* leading to the vestibule but shall not have a width of less than 44 inches (1118 mm) and shall not have a length of less than 72 inches (1829 mm) in the direction of egress travel.~~

~~**909.20.2 Construction.** The smokeproof enclosure shall be separated from the remainder of the building by not less than 2-hour *fire barriers* constructed in accordance with Section 707 or *horizontal assemblies* constructed in accordance with Section 711, or both. Openings are not permitted other than the required *means of egress* doors. The vestibule shall be separated from the *stairway* or *ramp* by not less than 2-hour *fire barriers* constructed in accordance with Section 707 or *horizontal*~~

DRAFT

~~*assemblies* constructed in accordance with Section 711, or both. The open exterior balcony shall be constructed in accordance with the *fire-resistance rating* requirements for floor assemblies.~~

~~**909.20.2.1 Door closers.** Doors in a smokeproof enclosure shall be self- or automatic closing by actuation of a smoke detector in accordance with Section 716.2.6.6 and shall be installed at the floor-side entrance to the smokeproof enclosure. The actuation of the smoke detector on any door shall activate the closing devices on all doors in the smokeproof enclosure at all levels. Smoke detectors shall be installed in accordance with Section 907.3.~~

~~**909.20.3 Natural ventilation alternative.** The provisions of Sections 909.20.3.1 through 909.20.3.3 shall apply to ventilation of smokeproof enclosures by natural means.~~

~~**909.20.3.1 Balcony doors.** Where access to the *stairway* or *ramp* is by way of an open exterior balcony, the door assembly into the enclosure shall be a *fire door assembly* in accordance with Section 716.~~

~~**909.20.3.2 Vestibule doors.** Where access to the *stairway* or *ramp* is by way of a vestibule, the door assembly into the vestibule shall be a *fire door assembly* complying with Section 716. The door assembly from the vestibule to the *stairway* shall have not less than a 20-minute *fire protection rating* complying with Section 716.~~

~~**909.20.3.3 Vestibule ventilation.** Each vestibule shall have a minimum net area of 16 square feet (1.5 m^2) of opening in a wall facing an outer *court*, *yard* or *public way* that is not less than 20 feet (6096 mm) in width.~~

~~**909.20.4 Mechanical ventilation alternative.** The provisions of Sections 909.20.4.1 through 909.20.4.4 shall apply to ventilation of smokeproof enclosures by mechanical means.~~

~~**909.20.4.1 Vestibule doors.** The door assembly from the building into the vestibule shall be a *fire door assembly* complying with Section 716.2.2.1. The door assembly from the vestibule to the *stairway* or *ramp* shall not have less than a 20-minute *fire protection rating* and shall meet the requirements for a smoke door assembly in accordance with Section 716.2.2.1. The door shall be installed in accordance with NFPA 105.~~

~~**909.20.4.2 Vestibule ventilation.** The vestibule shall be supplied with not less than one air change per minute and the exhaust shall be not less than 150 percent of supply. Supply air shall enter and exhaust air shall discharge from the vestibule through separate, tightly constructed ducts used only for that purpose. Supply air shall enter the vestibule within 6 inches (152 mm) of the floor level. The top of the exhaust register shall be located at the top of the smoke trap but not more than 6 inches (152 mm) down from the top of the trap, and shall be entirely within the smoke trap area. Doors in the open position shall not obstruct duct openings. Duct openings with controlling *dampers* are permitted where necessary to meet the design requirements, but *dampers* are not otherwise required.~~

~~**909.20.4.2.1 Engineered ventilation system.** Where a specially engineered system is used, the system shall exhaust a quantity of air equal to not less than 90 air changes per hour from any vestibule in the emergency operation mode and shall be sized to handle three vestibules simultaneously. Smoke detectors shall be located at the floor-side entrance to each vestibule and shall activate the system for the affected vestibule. Smoke detectors shall be installed in accordance with Section 907.3.~~

~~**909.20.4.3 Smoke trap.** The vestibule ceiling shall be not less than 20 inches (508 mm) higher than the door opening into the vestibule to serve as a smoke and heat trap and to provide an upward-moving air column. The height shall not be decreased unless *approved* and justified by design and test.~~

~~**909.20.4.4 Stairway or ramp shaft air movement system.** The *stairway* or *ramp* shaft shall be provided with a dampered relief opening and supplied with sufficient air to maintain a minimum positive pressure of 0.10 inch of water (25 Pa) in the shaft relative to the vestibule with all doors closed.~~))

909.20.5 Stairway and ramp pressurization ((~~alternative~~)) <u>for high-rise buildings</u>. Where ((~~the building is equipped throughout with an *automatic sprinkler system* in accordance with Section 903.3.1.1, the vestibule is not required, provided~~)) <u>required by Section 403.5.4 or 405.7.2,</u> that each interior *exit stairway* or *ramp* ((~~is~~)) <u>shall be</u> pressurized to not less than 0.10 inch of water (25 Pa) and not more than 0.35 inches of water (87 Pa) in the shaft relative to the building measured with all *interior exit stairway* and *ramp* doors closed under maximum anticipated conditions of stack effect and wind effect. <u>The pressure differential shall be measured between the *interior exit stairway* and the adjacent area. In residential buildings, the pressure differential is permitted to be measured between the *interior exit stairway* and the *dwelling units*.</u>

<u>**Exception:** The pressure differential is permitted to be measured relative to outdoor atmosphere on floors other than the following:</u>

<u>1. The fire floor,</u>

<u>2. The two floors immediately below the fire floor, and</u>

<u>3. The floor immediately above the fire floor.</u>

<u>**909.20.5.1 Supply air.** Air for stairway pressurization shall be supplied at intervals sufficient to maintain the required pressure throughout the interior exit stairway.</u>

DRAFT

Note: The performance goal for Section 909.20.5.1 is compliance with minimum and maximum pressures at all levels of the shaft.

909.20.5.2 Supply air. Supply air shall be taken directly from an outside, uncontaminated source at least 20 feet (6096 mm) from any air outlet. The supply air intake shall be located at the exterior of the building. The intake shall be continuous to the exterior of the building. The fan system shall be equipped with two smoke detectors located in the duct in accordance with NFPA 72 arranged to automatically shut down the fan system only when both smoke detectors activate. The detectors shall be located downstream of the fan and shall be connected to the fire alarm as a supervisory signal.

909.20.5.3 Dampered relief opening. The interior exit stairway shall be equipped with a relief opening at the top. The relief opening shall be equipped with a barometric relief damper and a motorized damper that complies with the *International Energy Conservation Code*. The motorized damper shall be of the normally open type (open with the power off). Activation of the damper shall be initiated by the building fire alarm system and by actuation of the *automatic sprinkler system*.

The pressurization system shall be capable of maintaining the differential pressure required by Section 909.20.5 while discharging 2,500 cubic feet per minute (1180 L/s) of air through the relief opening.

The relief outlet shall be located at least 20 feet from elevator hoistway and stairway pressurization system supply air intake locations.

((~~909.20.6~~)) 909.20.5.4 ((~~Ventilating~~)) Activation of pressurization equipment. The ((~~activation of ventilating~~)) pressurization equipment required by ((~~the alternatives in Sections 909.20.4 and~~)) Section 909.20.5 shall be activated by ((~~smoke detectors installed at each floor level at an *approved* location at the entrance to the smokeproof enclosure~~)) a fire alarm signal originating anywhere in the building. ((~~When the closing device for the *stairway* and *ramp* shaft and vestibule doors is activated by smoke detection or power failure, the mechanical equipment shall activate and operate at the required performance levels.~~)) Smoke detectors shall be installed in accordance with Section 907.3.

((~~909.20.6.1~~)) 909.20.5.5 ((~~Ventilation~~)) Independence of pressurization systems. ((~~Smokeproof enclosure ventilation~~)) Stairway pressurization systems shall be independent of other building ventilation systems.

Exception: Ventilation systems other than interior exit stairway supply air systems are permitted to be used to exhaust air from adjacent space when necessary to maintain the differential pressure relationships. Ventilation systems used to achieve stairway pressurization are not required to comply with Sections 909.20.5.6 and 909.20.5.7.

909.20.5.6 Protection of equipment. The equipment, control wiring, power wiring and ductwork shall comply with one of the following:

1. Equipment, control wiring, power wiring and ductwork shall be located exterior to the building and directly connected to the ((~~smokeproof enclosure~~)) interior exit stairway or connected to the ((~~smokeproof enclosure~~)) interior exit stairway by ductwork enclosed by ((~~not less than 2-hour~~)) *fire barriers* constructed in accordance with Section 707 or *horizontal assemblies* constructed in accordance with Section 711, or both.
2. Equipment, control wiring, power wiring and ductwork shall be located within the ((~~smokeproof enclosure~~)) interior exit stairway with intake or exhaust directly from and to the outside or through ductwork enclosed by not less than 2-hour *fire barriers* constructed in accordance with Section 707 or *horizontal assemblies* constructed in accordance with Section 711, or both.
3. Equipment, control wiring, power wiring and ductwork shall be located within the building if separated from the remainder of the building, including other mechanical equipment, by not less than 2-hour *fire barriers* constructed in accordance with Section 707 or *horizontal assemblies* constructed in accordance with Section 711, or both.

Exceptions:

1. Control wiring and power wiring located outside of a 2-hour fire barrier construction shall be protected using any one of the following methods:
   1.1. Cables used for survivability of required critical circuits shall be listed in accordance with UL 2196 and shall have a fire-resistance rating of not less than 2 hours.
   1.2. Where encased with not less than 2 inches (51 mm) of concrete.
   1.3. Electrical circuit protective systems shall have a fire-resistance rating of not less than 2 hours. Electrical circuit protective systems shall be installed in accordance with their listing requirements.
2. Ventilation systems other than interior exit stairway supply air systems are permitted to be used to exhaust air from adjacent space when necessary to maintain the differential pressure relationships. Ventilation systems used to achieve stairway pressurization are not required to comply with Sections 909.

DRAFT

Interpretation I909.20: Dampers other than motorized dampers required by the *International Energy Conservation Code* are not permitted in stairway pressurization system air supply unless *approved* by the *building official*.

((~~909.20.6.2~~)) 909.20.5.7 ((~~Standby~~)) Emergency power. ((~~Mechanical vestibule and *stairway* and *ramp* shaft ventilation~~)) Pressurization systems and automatic fire detection systems shall be provided with ((~~standby~~)) emergency power in accordance with Section 2702.

((~~**909.20.6.3 Acceptance and testing.** Before the mechanical equipment is *approved*, the system shall be tested in the presence of the *building official* to confirm that the system is operating in compliance with these requirements.~~))

909.20.5.8 Smoke control provisions. Stairway pressurization systems in high-rise buildings shall comply with Sections 909.10 through 909.19 in addition to Section 909.20.5.

909.20.6 Stairway pressurization for low-rise buildings. Where stairway pressurization is provided in accordance with Section 1006.3.2 exception 7 or Section 510.2 item 10 or 11, the pressurization system shall comply with the following:

1. Stairways shall be pressurized to a minimum positive pressure of 0.15 inch of water column (37 Pa) relative to the main occupied area on each floor, and a maximum pressure that complies with Section 1010.1.3.
2. The stairway pressurization shall be activated by a fire alarm originating anywhere in the building.
3. Pressurization equipment and its duct work located within the building shall be separated from other portions of the building by construction equal to that required for the interior exit stairway.
4. Supply air shall be taken directly from an outside, uncontaminated source at least 20 feet (6096 mm) from any air exhaust system or outlet. Air ducts shall be continuous to the exterior of the building. Two smoke detectors shall be located in the duct in accordance with NFPA 72 arranged to automatically shut down the fan system only when both smoke detectors activate. The detectors shall be located downstream of the fan and shall be connected to the fire alarm as a supervisory signal.
5. A *legally required standby power system* shall be provided for the pressurization system according to *Seattle Electrical Code* Section 701. A connection ahead of the service disconnecting means shall be permitted as the sole source of power to the pressurization system.
6. Other measures to prevent loss of pressurization shall be provided in the design and construction of interior exit stairways, such as doors and door closers, quality of workmanship and caulking of penetrations and joints.
7. Stairway pressurization systems in low-rise buildings shall comply with Sections 909.10, 909.12, 909.13, 909.14, 909.15, 909.17, 909.18, and 909.19 in addition to Section 909.20.5.

Exception: A rational analysis complying with Section 909.4 is not required.

[S] 909.21 Elevator hoistway pressurization alternative. Where elevator hoistway pressurization is provided in lieu of required enclosed elevator lobbies, the pressurization system shall comply with Sections 909.21.1 through ((~~909.21.11~~)) 909.21.8.

909.21.1 Pressurization requirements. Elevator hoistways shall be pressurized to maintain a minimum positive pressure of 0.10 inch of water (25 Pa) and a maximum positive pressure of 0.25 inch of water (67 Pa) with respect to adjacent occupied space on all floors. This pressure shall be measured at the midpoint of each hoistway door, with all elevator cars at the floor of recall and all hoistway doors on the floor of recall open and all other hoistway doors closed. The pressure differentials shall be measured between the hoistway and the adjacent elevator landing. The opening and closing of hoistway doors at each level must be demonstrated during this test. ((~~The supply air intake shall be from an outside, uncontaminated source located a minimum distance of 20 feet (6096 mm) from any air exhaust system or outlet.~~))

Exceptions:

1. On floors containing only Group R occupancies, the pressure differential is permitted to be measured between the hoistway and a *dwelling unit* or *sleeping unit*.
2. Where an elevator opens into a lobby enclosed in accordance with Section ((~~3007.6 or 3008.6~~)) 403.6.1.5 or 403.6.2.6, the pressure differential is permitted to be measured between the hoistway and the space immediately outside the door(s) from the floor to the enclosed lobby.
3. The pressure differential is permitted to be measured relative to the outdoor atmosphere on floors other than the following:
   - 3.1. The fire floor.
   - 3.2. The two floors immediately below the fire floor.
   - 3.3. The floor immediately above the fire floor.
4. The minimum positive pressure of 0.10 inch of water (25 Pa) and a maximum positive pressure of 0.25 inch of water (67 Pa) with respect to occupied floors are not required at the floor of recall with the doors open.

DRAFT

5. Subject to the approval of the *building official*, pressurization is not required for elevators in high rise buildings with less than 75 feet (22 860 mm) from the lowest floor to the highest ceiling of the *stories* served by the elevator.

909.21.1.1 Supply air. The supply air shall be taken from an outside, uncontaminated source located a minimum distance of 20 feet (6096 mm) from any air outlet. The supply air intake may be located within the building provided it is located no more than 20 feet (6096 mm) from major openings in the building exterior such as loading docks and vehicular entrances. There shall be no obstruction to the flow of air to the intake.

((~~909.21.1.1~~)) 909.21.1.2 Use of ventilation systems. Ventilation systems, other than hoistway supply air systems, are permitted to be used to exhaust air from adjacent spaces on the fire floor, two floors immediately below and one floor immediately above the fire floor to the building's exterior where necessary to maintain positive pressure relationships as required in Section 909.21.1 during operation of the elevator shaft pressurization system. Ventilation systems used to achieve hoistway pressurization are not required to comply with Section 909.21.4 and 909.21.5.

909.21.2 ((~~Rational analysis.~~ ~~A rational analysis complying with Section 909.4 shall be submitted with the *construction documents*.~~)) No requirements.

909.21.3 Ducts for system. Any duct system that is part of the pressurization system shall be protected with the same *fire-resistance rating* as required for the elevator shaft enclosure.

Interpretation I909.21: Dampers other than motorized dampers required by the *International Energy Conservation Code* are not permitted in hoistway pressurization system supply air system unless *approved* by the *building official*.

909.21.4 Fan system. The fan system provided for the pressurization system shall be as required by Sections 909.21.4.1 through 909.21.4.4.

909.21.4.1 Fire resistance. Where located within the building, the fan system that provides the pressurization shall be protected with the same *fire-resistance rating* required for the elevator ((~~shaft~~)) hoistway enclosure.

909.21.4.2 Smoke detection. The fan system shall be equipped with ((~~a~~)) two smoke detectors ((~~that will~~)) located in the duct in accordance with NFPA 72 arranged to automatically shut down the fan system only when both smoke detectors activate. ((~~is detected within the system.~~)) The detectors shall be located downstream of the fan and shall be connected to the fire alarm as a supervisory signal.

909.21.4.3 Separate systems. A separate fan system shall be used for each elevator hoistway.

909.21.4.4 Fan capacity. The ((~~supply~~)) fan system shall be ((~~either adjustable with a capacity of not less than 1,000 cfm (0.4719 m^3/s) per door, or that specified by a *registered design professional* to meet the requirements of a designed pressurization system~~)) provided with the capacity to pressurize the elevator hoistway as determined by a registered design professional. The fan system shall be provided with a means to balance or modulate the airflow to the elevator hoistway to meet the differential pressure requirements on all floors for each condition identified by the rational analysis.

909.21.5 ((~~Standby~~)) Legally required standby and emergency power. Pressurization systems shall be powered by an *approved* emergency or *legally required standby power system*. ((~~The~~)) An *emergency power system* conforming to Section 909.11 shall be provided for pressurization systems in high-rise buildings. Legally required standby power shall be provided ((~~with~~)) for the pressurization system in all other buildings. The emergency and legally required standby power shall be in accordance with Section 2702. For other than high-rise buildings, connection ahead of the service disconnecting means in accordance with Seattle Electrical Code Section 701.12(E) is permitted as a source of legally required standby power.

909.21.6 Activation of pressurization system. The elevator pressurization system shall be activated upon activation of either the building fire alarm system or the elevator lobby smoke detectors. Where both a building fire alarm system and elevator lobby smoke detectors are present, each shall be independently capable of activating the pressurization system. Activation of the fan serving the hoistway is permitted to be delayed by up to 30 seconds so that elevator recall can be initiated prior to pressurizing the hoistway.

((~~909.21.7 Testing.~~ ~~Testing for performance shall be required in accordance with Section 909.18.8. System acceptance shall be in accordance with Section 909.19.~~))

909.21.7 Machine rooms. Elevator machine rooms shall be pressurized in accordance with this section unless separated from the elevator hoistway by construction in accordance with Section 713.

((~~909.21.8 Marking and identification.~~ ~~Detection and control systems shall be marked in accordance with Section 909.14.~~))

909.21.8 Smoke control provisions. Hoistway pressurization systems shall comply with Sections 909.10 through 909.19 in addition to Section 909.21.

Exception: Hoistway pressurization systems in low-rise buildings are not required to comply with 909.11 and 909.16.

((~~909.21.9 Control diagrams.~~ ~~Control diagrams shall be provided in accordance with Section 909.15.~~

~~**909.21.10 Control panel.** A control panel complying with Section 909.16 shall be provided.~~

DRAFT

~~**909.21.11 System response time.** Hoistway pressurization systems shall comply with the requirements for smoke control system response time in Section 909.17.~~))

SECTION 910
SMOKE AND HEAT REMOVAL

[F] 910.1 General. Where required by this code, smoke and heat vents or mechanical smoke removal systems shall conform to the requirements of this section.

[F] 910.2 Where required. Smoke and heat vents or a mechanical smoke removal system shall be installed as required by Sections 910.2.1 and 910.2.2.

Exceptions:

1. Frozen food warehouses used solely for storage of Class I and II commodities where protected by an *approved automatic sprinkler system*.
2. Smoke and heat removal shall not be required in areas of buildings equipped with early suppression fast-response (ESFR) sprinklers.
3. Smoke and heat removal shall not be required in areas of buildings equipped with control mode special application sprinklers with a response time index of 50 (m · s)1/2 or less that are listed to control a fire in stored commodities with 12 or fewer sprinklers.

910.2.1 Group F-1 or S-1. Smoke and heat vents installed in accordance with Section 910.3 or a mechanical smoke removal system installed in accordance with Section 910.4 shall be installed in buildings and portions thereof used as a Group F-1 or S-1 occupancy having more than 50,000 square feet (4645 m^2) of undivided area. In occupied portions of a building equipped throughout with an *automatic sprinkler system* in accordance with Section 903.3.1.1 where the upper surface of the story is not a roof assembly, a mechanical smoke removal system in accordance with Section 910.4 shall be installed.

Exception: Group S-1 aircraft repair hangars.

[F] 910.2.2 High-piled combustible storage. Smoke and heat removal required by Table 3206.2 of the *International Fire Code* for buildings and portions thereof containing high-piled combustible storage shall be installed in accordance with Section 910.3 in unsprinklered buildings. In buildings and portions thereof containing high-piled combustible storage equipped throughout with an *automatic sprinkler system* in accordance with Section 903.3.1.1, a smoke and heat removal system shall be installed in accordance with Section 910.3 or 910.4. In occupied portions of a building equipped throughout with an *automatic sprinkler system* in accordance with Section 903.3.1.1, where the upper surface of the story is not a roof assembly, a mechanical smoke removal system in accordance with Section 910.4 shall be installed.

[F] 910.3 Smoke and heat vents. The design and installation of smoke and heat vents shall be in accordance with Sections 910.3.1 through 910.3.3.

[F] 910.3.1 Listing and labeling. Smoke and heat vents shall be *listed* and labeled to indicate compliance with UL 793 or FM 4430.

[F] 910.3.2 Smoke and heat vent locations. Smoke and heat vents shall be located 20 feet (6096 mm) or more from adjacent *lot lines* and *fire walls* and 10 feet (3048 mm) or more from *fire barriers*. Vents shall be uniformly located within the roof in the areas of the building where the vents are required to be installed by Section 910.2 with consideration given to roof pitch, sprinkler location and structural members.

910.3.3 Smoke and heat vents area. The required aggregate area of smoke and heat vents shall be calculated as follows:

For buildings equipped throughout with an *automatic sprinkler system* in accordance with Section 903.3.1.1:

$A_{VR} = V/9000$ **(Equation 9-3)**

where:

A_{VR} = The required aggregate vent area (ft^2).

V = Volume (ft^3) of the area that requires smoke removal.

For unsprinklered buildings:

$A_{VR} = A_{FA}/50$ **(Equation 9-4)**

where:

A_{VR} = The required aggregate vent area (ft^2).

A_{FA} = The area of the floor in the area that requires smoke removal.

[S][F] 910.4 Mechanical smoke removal systems. Mechanical smoke removal systems shall be designed and installed in accordance with Sections 910.4.1 through 910.4.7.

DRAFT

910.4.1 Automatic sprinklers required. The building shall be equipped throughout with an *approved automatic sprinkler system* in accordance with Section 903.3.1.1.

910.4.2 Exhaust fan construction. Exhaust fans that are part of a mechanical smoke removal system shall be rated for operation at 221°F (105°C). Exhaust fan motors shall be located outside of the exhaust fan air stream.

910.4.3 System design criteria. The mechanical smoke removal system shall be sized to exhaust the building at a minimum rate of two air changes per hour based on the volume of the building or portion thereof without contents. The capacity of each exhaust fan shall not exceed 30,000 cubic feet per minute (14.2 m^3/s).

910.4.3.1 Makeup air. Makeup air openings shall be provided within 6 feet (1829 mm) of the floor level. Operation of makeup air openings shall be manual or automatic. The minimum gross area of makeup air inlets shall be 8 square feet per 1,000 cubic feet per minute (0.74 m^2 per 0.4719 m^3/s) of smoke exhaust.

910.4.4 Activation. The mechanical smoke removal system shall be activated by manual controls only.

910.4.5 Manual control location. Manual controls shall be located where they are able to be accessed by the fire service from an exterior door of the building and separated from the remainder of the building by not less than 1-hour *fire barriers* constructed in accordance with Section 707 or *horizontal assemblies* constructed in accordance with Section 711, or both.

[F] 910.4.6 Control wiring. Wiring for operation and control of mechanical smoke removal systems shall be connected ahead of the main disconnect in accordance with Section 701.12E of ((~~NFPA 70~~)) the Seattle Electrical Code and be protected against interior fire exposure to temperatures in excess of 1,000°F (538°C) for a period of not less than 15 minutes.

[F] 910.4.7 Controls. Where building air-handling and mechanical smoke removal systems are combined or where independent building air-handling systems are provided, fans shall automatically shut down in accordance with the *International Mechanical Code*. The manual controls provided for the smoke removal system shall have the capability to override the automatic shutdown of fans that are part of the smoke removal system.

910.5 Maintenance. Smoke and heat vents and mechanical smoke removal systems shall be maintained in accordance with the *International Fire Code.*

SECTION 911
FIRE COMMAND CENTER

[S][F] 911.1 General. Where required by other sections of this code and in buildings classified as high-rise buildings by this code, a fire command center for fire department operations shall be provided and shall comply with Sections 911.1.1 through 911.1.6.

[F] 911.1.1 Location and access. The location and accessibility of the fire command center shall be *approved* by the *fire code official.*

[F] 911.1.2 Separation. The fire command center shall be separated from the remainder of the building by not less than a ((~~1~~)) 2-hour *fire barrier* constructed in accordance with Section 707 or *horizontal assembly* constructed in accordance with Section 711, or both.

[F] 911.1.3 Size. The *fire command center* shall be not less than 0.015 percent of the total building area of the facility served or 200 square feet (19 m^2) in area, whichever is greater, with a minimum dimension of 0.7 times the square root of the room area or 10 feet (3048 mm), whichever is greater.

[F] 911.1.4 Layout approval. A layout of the fire command center and all features required by this section to be contained therein shall be submitted for approval prior to installation.

[F] 911.1.5 Storage. Storage unrelated to operation of the fire command center shall be prohibited.

[F] 911.1.6 Required features. The fire command center shall comply with NFPA 72 and shall contain all of the following features:

1. The emergency voice/alarm communication system control unit.
2. The fire department communications system.
3. Fire detection and alarm system annunciator.
4. Annunciator unit visually indicating the location of the elevators and whether they are operational.
5. Status indicators and controls for air distribution systems.
6. The fire fighter's control panel required by Section 909.16 for smoke control systems installed in the building.
7. Controls for unlocking *interior exit stairway* doors simultaneously.
8. Sprinkler valve and waterflow detector display panels.
9. Emergency and legally required standby power status indicators.

DRAFT

10. A telephone for fire department use with controlled access to the public telephone system.
11. Fire pump status indicators.
12. Schematic building plans indicating the typical floor plan and detailing the building core, *means of egress*, fire protection systems, fire fighter air replenishment system, fire-fighting equipment and fire department access and the location of *fire walls*, *fire barriers*, *fire partitions*, *smoke barriers* and smoke partitions.
13. An *approved* Building Information Card that contains, but is not limited to, the following information:
    - 13.1. General building information that includes: property name, address, the number of floors in the building above and below grade, use and occupancy classification (for mixed uses, identify the different types of occupancies on each floor), and the estimated building population during the day, night and weekend.
    - 13.2. Building emergency contact information that includes: a list of the building's emergency contacts including but not limited to building manager and building engineer and their respective work phone number, cell phone number, e-mail address.
    - 13.3. Building construction information that includes: the type of building construction including but not limited to floors, walls, columns, and roof assembly.
    - 13.4. *Exit access* and *exit stairway* information that includes: number of *exit access* and *exit stairways* in the building, each *exit access* and *exit stairway* designation and floors served, location where each *exit access* and *exit stairway* discharges, *interior exit stairways* that are pressurized, *exit* stairways provided with emergency lighting, each *exit stairway* that allows reentry, *exit stairways* providing roof access; elevator information that includes: number of elevator banks, elevator bank designation, elevator car numbers and respective floors that they serve; location of elevator machine rooms, control rooms and control spaces; location of sky lobby, location of freight elevator banks.
    - 13.5. Building services and system information that includes: location of mechanical rooms, location of building management system, location and capacity of all fuel oil tanks, location of emergency generator, location of natural gas service.
    - 13.6. Fire protection system information that includes: location of standpipes, location of fire pump room, location of fire department connections, floors protected by automatic sprinklers, location of different types of *automatic sprinkler systems* installed including, but not limited to, dry, wet and pre-action.
    - 13.7 Hazardous material information that includes: location of hazardous material, quantity of hazardous material.
14. Work table.
15. Generator supervision devices, manual start and ((~~transfer~~)) stop features.
16. Public address system, where specifically required by other sections of this code.
17. Elevator fire recall switch in accordance with ASME A17.1/BSA 44.
18. Elevator emergency or legally required standby power selector switch(es), where emergency or standby power is provided.
19. On-site fire protection water tank fill-valve control switch, tank level indicators, tank low-level alarm and tank fill signal.

DRAFT

SECTION 912
FIRE DEPARTMENT CONNECTIONS

[F] 912.1 Installation. Fire department connections shall be installed in accordance with the NFPA standard applicable to the system design and shall comply with Sections 912.2 through 912.6.

[F] 912.2 Location. With respect to hydrants, driveways, buildings and landscaping, fire department connections shall be so located that fire apparatus and hose connected to supply the system will not obstruct access to the buildings for other fire apparatus. The location of fire department connections shall be *approved* by the *fire code official*.

[F] 912.2.1 Visible location. Fire department connections shall be located on the street side of buildings or facing approved fire apparatus access roads, fully visible and recognizable from the street, fire apparatus access road or nearest point of fire department vehicle access or as otherwise *approved* by the *fire code official*.

[F] 912.2.2 Existing buildings. On existing buildings, wherever the fire department connection is not visible to approaching fire apparatus, the fire department connection shall be indicated by an *approved* sign mounted on the street front or on the side of the building. Such sign shall have the letters "FDC" not less than 6 inches (152 mm) high and words in letters not less than 2 inches (51 mm) high or an arrow to indicate the location. Such signs shall be subject to the approval of the *fire code official*.

[F] 912.3 Fire hose threads. Fire hose threads used in connection with standpipe systems shall be *approved* and shall be compatible with fire department hose threads.

[F] 912.4 Access. Immediate access to fire department connections shall be maintained at all times and without obstruction by fences, bushes, trees, walls or any other fixed or moveable object. Access to fire department connections shall be *approved* by the *fire code official*.

Exception: Fences, where provided with an access gate equipped with a sign complying with the legend requirements of this section and a means of emergency operation. The gate and the means of emergency operation shall be *approved* by the *fire code official* and maintained operational at all times.

[F] 912.4.1 Locking fire department connection caps. The fire code official is authorized to require locking caps on fire department connections for water-based *fire protection systems* where the responding fire department carries appropriate key wrenches for removal.

[F] 912.4.2 Clear space around connections. A working space of not less than 36 inches (762 mm) in width, 36 inches (914 mm) in depth and 78 inches (1981 mm) in height shall be provided and maintained in front of and to the sides of wall-mounted fire department connections and around the circumference of free-standing fire department connections, except as otherwise required or *approved* by the *fire code official*.

[F] 912.4.3 Physical protection. Where fire department connections are subject to impact by a motor vehicle, vehicle impact protection shall be provided in accordance with Section 312 of the *International Fire Code*.

[S][F] 912.5 Signs. A metal sign with raised letters not less than 1 inch (25 mm) in size shall be mounted on all fire department connections serving automatic sprinklers, standpipes or fire pump connections. Such signs shall read: AUTOMATIC SPRINKLERS or STANDPIPES or TEST CONNECTION or a combination thereof as applicable. Where the fire department connection does not serve the entire building, a sign shall be provided indicating the portions of the building served.

912.5.1 Signs for high-rise buildings. An additional sign with letters at least 1 inch in size shall be provided at the fire department connections of high-rise buildings that indicate the building fire pump static (churn) discharge pressure. Where the pump is more than two *stories* above or below the fire department connections, the pump static/churn discharge pressure on the signage shall be adjusted to correct for the elevation difference.

[S][P] 912.6 Backflow protection. The potable water supply to automatic sprinkler and standpipe systems shall be protected against backflow as required by the ((~~*International*~~)) *Uniform Plumbing Code*.

DRAFT

SECTION 913
FIRE PUMPS

[F] 913.1 General. Where provided, fire pumps shall be installed in accordance with this section and NFPA 20.

[F] 913.2 Protection against interruption of service. The fire pump, driver and controller shall be protected in accordance with NFPA 20 against possible interruption of service through damage caused by explosion, fire, flood, earthquake, rodents, insects, windstorm, freezing, vandalism and other adverse conditions.

[W][S] 913.2.1 Protection of fire pump rooms. Fire pumps shall be located in rooms that are separated from all other areas of the building by 2-hour *fire barriers* constructed in accordance with Section 707 or 2-hour *horizontal assemblies* constructed in accordance with Section 711, or both.

((~~**Exceptions:**~~

~~1. In other than high-rise buildings, separation by 1-hour *fire barriers* constructed in accordance with Section 707 or 1-hour *horizontal assemblies* constructed in accordance with Section 711, or both, shall be permitted in buildings equipped throughout with an *automatic sprinkler system* in accordance with Section 903.3.1.1 or 903.3.1.2.~~

~~2. Separation is not required for fire pumps physically separated in accordance with NFPA 20.~~))

[F] 913.2.2 Circuits supplying fire pumps. Cables used for survivability of circuits supplying fire pumps shall be protected using one of the following methods:

1. Cables used for survivability of required critical circuits shall be *listed* in accordance with UL 2196 and shall have a f*ire-resistance rating* of not less than 1 hour.
2. Electrical circuit protective systems shall have a *fire-resistance rating* of not less than 1 hour. Electrical circuit protective systems shall be installed in accordance with their listing requirements.
3. Construction having a *fire-resistance rating* of not less than 1 hour.

[F] 913.3 Temperature of pump room. Suitable means shall be provided for maintaining the temperature of a pump room or pump house, where required, above 40°F (5°C).

[F] 913.3.1 Engine manufacturer's recommendation. Temperature of the pump room, pump house or area where engines are installed shall never be less than the minimum recommended by the engine manufacturer. The engine manufacturer's recommendations for oil heaters shall be followed.

[F] 913.4 Valve supervision. Where provided, the fire pump suction, discharge and bypass valves, and isolation valves on the backflow prevention device or assembly shall be supervised open by one of the following methods:

1. Central-station, proprietary or remote-station signaling service.
2. Local signaling service that will cause the sounding of an audible signal at a *constantly attended location*.
3. Locking valves open.
4. Sealing of valves and *approved* weekly recorded inspection where valves are located within fenced enclosures under the control of the owner.

[F] 913.4.1 Test outlet valve supervision. Fire pump test outlet valves shall be supervised in the closed position.

[F] 913.5 Acceptance test. Acceptance testing shall be done in accordance with the requirements of NFPA 20.

SECTION 914
EMERGENCY RESPONDER SAFETY FEATURES

[F] 914.1 Shaftway markings. Vertical shafts shall be identified as required by Sections 914.1.1 and 914.1.2.

[F] 914.1.1 Exterior access to shaftways. Outside openings accessible to the fire department and that open directly on a hoistway or shaftway communicating between two or more floors in a building shall be plainly marked with the word "SHAFTWAY" in red letters not less than 6 inches (152 mm) high on a white background. Such warning signs shall be placed so as to be readily discernible from the outside of the building.

[F] 914.1.2 Interior access to shaftways. Door or window openings to a hoistway or shaftway from the interior of the building shall be plainly marked with the word "SHAFTWAY" in red letters not less than 6 inches (152 mm) high on a white background. Such warning signs shall be placed so as to be readily discernible.

Exception: Markings shall not be required on shaftway openings that are readily discernible as openings onto a shaftway by the construction or arrangement.

[F] 914.2 Equipment room identification. Fire protection equipment shall be identified in an *approved* manner. Rooms containing controls for air-conditioning systems, sprinkler risers and valves or other fire detection, suppression or control elements shall be identified for the use of the fire department. *Approved* signs required to identify fire protection equipment and equipment location shall be constructed of durable materials, permanently installed and readily visible.

DRAFT

SECTION 915
CARBON MONOXIDE DETECTION

[W][F] 915.1 General. Carbon monoxide detection shall be installed in new buildings in accordance with Sections 915.1.1 through 915.6. Carbon monoxide detection shall be installed in existing buildings in accordance with Chapter 11 of the *International Fire Code*.

[W][S][F] 915.1.1 Where required. Carbon monoxide detection shall be provided in Group I-1, I-2, I-4 and R occupancies and in classrooms in Group E occupancies in the locations specified in Section 915.2 where any of the conditions in Sections 915.1.2 through 915.1.6 exist.

Exceptions:

1. Carbon monoxide detectors shall not be required in Group R-2 college dormitories.
2. Sleeping units or *dwelling units* in Group I and R occupancies and Group R-2 college dormitories, hotel, Department of Corrections prisons and work releases, and boarding home and residential treatment facilities licensed by the State of Washington, which do not contain a fuel-burning appliance, a fuel-burning fireplace, or have an attached garage, need not be provided with carbon monoxide alarms provided that they comply with the exceptions of Section 915.1.4.

[F] 915.1.2 Fuel-burning appliances and fuel-burning fireplaces. Carbon monoxide detection shall be provided in *dwelling units*, *sleeping units* and classrooms that contain a fuel-burning appliance or a fuel-burning fireplace.

[F] 915.1.3 Fuel burning, forced-air furnaces. Carbon monoxide detection shall be provided in *dwelling units*, *sleeping units* and classrooms served by a fuel-burning, forced-air furnace.

Exception: Carbon monoxide detection shall not be required in *dwelling units*, *sleeping units* and classrooms if a carbon monoxide detector is provided in the first room or area served by each main duct leaving the furnace, and the carbon monoxide alarm signals are automatically transmitted to an approved location.

[F] 915.1.4 Fuel-burning appliances outside of dwelling units, sleeping units and classrooms. Carbon monoxide detection shall be provided in *dwelling units*, *sleeping units* and classrooms located in buildings that contain fuel-burning appliances or fuel-burning fireplaces.

Exceptions:

1. Carbon monoxide detection shall not be required in *dwelling units*, *sleeping units* and classrooms without communicating openings between the fuel-burning appliance or fuel-burning fireplace and the *dwelling unit*, *sleeping unit* or classroom.
2. Carbon monoxide detection shall not be required in *dwelling units*, *sleeping units* and classrooms where a carbon monoxide detector is provided in one of the following locations:
   2.1. In an approved location between the fuel-burning appliance or fuel-burning fireplace and the *dwelling unit*, *sleeping unit* or classroom.
   2.2. On the ceiling of the room containing the fuel-burning appliance or fuel-burning fireplace.

[F] 915.1.5 Private garages. Carbon monoxide detection shall be provided in *dwelling units*, *sleeping units* and classrooms in buildings with attached private garages.

Exceptions:

1. Carbon monoxide detection shall not be required in dwelling units, sleeping units and classrooms without communicating openings between the private garage and the *dwelling unit*, *sleeping unit* or classroom.
2. Carbon monoxide detection shall not be required in *dwelling units*, *sleeping units* and classrooms located more than one story above or below a private garage.
3. Carbon monoxide detection shall not be required where the private garage connects to the building through an open-ended corridor.
4. Where a carbon monoxide detector is provided in an approved location between openings to a private garage and *dwelling units*, *sleeping units* or classrooms.

[F] 915.1.6 Exempt garages. For determining compliance with Section 915.1.5, an *open parking garage* complying with Section 406.5 or an enclosed parking garage complying with Section 406.6 shall not be considered a private garage.

[W][F] 915.2 Locations. Where required by Section 915.1.1, carbon monoxide detection shall be installed in the locations specified in Sections 915.2.1 through 915.2.3.

[F] 915.2.1 Dwelling units. Carbon monoxide detection shall be installed in *dwelling units* outside of each separate sleeping area in the immediate vicinity of the bedrooms and on each level of the *dwelling*. Where a fuel-burning appliance or a fuel-burning fireplace is located within a bedroom or its attached bathroom, carbon monoxide detection shall be installed within the bedroom.

[F] 915.2.2 Sleeping units. Carbon monoxide detection shall be installed in *sleeping units*.

Exception: Carbon monoxide detection shall be allowed to be installed outside of each separate sleeping area in the immediate vicinity of the *sleeping unit* where the *sleeping unit* or its attached bathroom does not contain a fuel-burning appliance or a fuel-burning fireplace and is not served by a forced air furnace.

[F] 915.2.3 Group E occupancies. ((~~Carbon~~)) When required by Section 915.1 in new buildings or by Chapter 11 of the International Fire Code, carbon monoxide detectors shall be installed in classrooms in Group E occupancies. Carbon monoxide alarm signals shall be automatically transmitted to an on-site location that is staffed by school personnel.

Exceptions:

1. Carbon monoxide alarm signals shall not be required to be automatically transmitted to an on-site location that is staffed by school personnel in Group E occupancies with an occupant load of ((~~30~~)) 50 or less.
2. Carbon monoxide alarm signals shall not be required to be automatically transmitted to an on-site location that is staffed by school personnel in Group E occupancies where an exception contained in Section 915.1 applies, or in Group E occupancies where signals are transmitted to an off-site service monitored by a third party, such as a service that monitors fire protection systems in the building.

[F] 915.3 Carbon monoxide detection. Carbon monoxide detection required by Sections 915.1 through 915.2.3 shall be provided by carbon monoxide alarms complying with Section 915.4 or carbon monoxide detection systems complying with Section 915.5.

[F] 915.4 Carbon monoxide alarms. Carbon monoxide alarms shall comply with Sections 915.4.1 through 915.4.4.

[F] 915.4.1 Power source. Carbon monoxide alarms shall receive their primary power from the building wiring where such wiring is served from a commercial source, and when primary power is interrupted, shall receive power from a battery. Wiring shall be permanent and without a disconnecting switch other than that required for overcurrent protection.

DRAFT

CHAPTER 10

MEANS OF EGRESS

User notes:

About this chapter: *Chapter 10 provides the general criteria for designing the means of egress established as the primary method for protection of people in buildings by allowing timely relocation or evacuation of building occupants. Both prescriptive and performance language is utilized in this chapter to provide for a basic approach in the determination of a safe exiting system for all occupancies. It addresses all portions of the egress system (exit access, exits and exit discharge) and includes design requirements as well as provisions regulating individual components. The requirements detail the size, arrangement, number and protection of means of egress components. Functional and operational characteristics that will permit the safe use of components without special knowledge or effort are specified.*

The means of egress protection requirements work in coordination with other sections of the code, such as protection of vertical openings (see Chapter 7), interior finish (see Chapter 8), fire suppression and detection systems (see Chapter 9) and numerous others, all having an impact on life safety. Chapter 10 is subdivided into four main sections: general (Sections 1003–1015), exit access (Sections 1016–1021), exit (Sections 1022–1027) and exit discharge (Section 1028). Special allowances for the unique requirements for assembly spaces (Section 1029) and emergency escape and rescue openings (Section 1030) complete the chapter. Chapter 10 of this code is duplicated in Chapter 10 of the International Fire Code®*; however, the* International Fire Code *contains one additional section on maintenance of the means of egress system in existing buildings.*

Code development reminder: *Code change proposals to sections preceded by the designation [F] will be considered by the International Fire Code Development Committee during the 2019 (Group B) Code Development Cycle. See explanation on page iv.*

DRAFT

SECTION 1001
ADMINISTRATION

1001.1 General. Buildings or portions thereof shall be provided with a *means of egress* system as required by this chapter. The provisions of this chapter shall control the design, construction and arrangement of *means of egress* components required to provide an *approved means of egress* from structures and portions thereof.

1001.2 Minimum requirements. It shall be unlawful to alter a building or structure in a manner that will reduce the number of *exits* or the minimum width or required capacity of the *means of egress* to less than required by this code.

[F] SECTION 1002
MAINTENANCE AND PLANS

[F] 1002.1 Maintenance. *Means of egress* shall be maintained in accordance with the *International Fire Code*.

[F] 1002.2 Fire safety and evacuation plans. Fire safety and evacuation plans shall be provided for all occupancies and buildings where required by the *International Fire Code*. Such fire safety and evacuation plans shall comply with the applicable provisions of Sections 401.2 and 404 of the *International Fire Code*.

SECTION 1003
GENERAL MEANS OF EGRESS

1003.1 Applicability. The general requirements specified in Sections 1003 through 1015 shall apply to all three elements of the *means of egress* system, in addition to those specific requirements for the *exit access*, the *exit* and the *exit discharge* detailed elsewhere in this chapter.

[S] 1003.2 Ceiling height. The *means of egress* shall have a ceiling height of not less than 7 feet 6 inches (2286 mm) above the finished floor.

Exceptions:

1. ((~~Sloped ceilings~~)) Ceilings in accordance with Section 1207.2.

((~~2. Ceilings of *dwelling units* and *sleeping units* within residential occupancies in accordance with Section 1207.2.~~

~~3~~)) 2. Allowable projections in accordance with Section 1003.3.

((~~4~~)) 3. *Stair* headroom in accordance with Section 1011.3.

((~~5~~)) 4. Door height in accordance with Section 1010.1.1.

((~~6~~)) 5. *Ramp* headroom in accordance with Section 1012.5.2.

((~~7~~)) 6. The clear height of floor levels in vehicular and pedestrian traffic areas of public and private parking garages in accordance with Section 406.2.2.

((~~8~~)) 7. Areas above and below *mezzanine* floors in accordance with Section 505.2.

1003.3 Protruding objects. Protruding objects on *circulation paths* shall comply with the requirements of Sections 1003.3.1 through 1003.3.4.

1003.3.1 Headroom. Protruding objects are permitted to extend below the minimum ceiling height required by Section 1003.2 where a minimum headroom of 80 inches (2032 mm) is provided over any circulation paths, including walks, *corridors*, *aisles* and passageways. Not more than 50 percent of the ceiling area of a *means of egress* shall be reduced in height by protruding objects.

Exception: Door closers and stops shall not reduce headroom to less than 78 inches (1981 mm).

A barrier shall be provided where the vertical clearance above a circulation path is less than 80 inches (2032 mm) high above the finished floor. The leading edge of such a barrier shall be located 27 inches (686 mm) maximum above the finished floor.

1003.3.2 Post-mounted objects. A free-standing object mounted on a post or pylon shall not overhang that post or pylon more than 4 inches (102 mm) where the lowest point of the leading edge is more than 27 inches (686 mm) and less than 80 inches (2032 mm) above the finished floor. Where a sign or other obstruction is mounted between posts or pylons and the clear distance between the posts or pylons is greater than 12 inches (305 mm), the lowest edge of such sign or obstruction shall be 27 inches (686 mm) maximum or 80 inches (2032 mm) minimum above the finished floor or ground.

Exception: These requirements shall not apply to sloping portions of *handrails* between the top and bottom riser of *stairs* and above the *ramp* run.

1003.3.3 Horizontal projections. Objects with leading edges more than 27 inches (685 mm) and not more than 80 inches (2030 mm) above the finished floor shall not project horizontally more than 4 inches (102 mm) into the *circulation path*.

Exception: *Handrails* are permitted to protrude 4-1/2 inches (114 mm) from the wall or *guard*.

1003.3.4 Clear width. Protruding objects shall not reduce the minimum clear width of *accessible routes*.

1003.4 Slip-resistant surface. Circulation paths of the *means of egress* shall have a slip-resistant surface and be securely attached.

[S] 1003.5 Elevation change. Where changes in elevation of less than 12 inches (305 mm) exist in the *means of egress*, sloped surfaces shall be used. Where the slope is greater than one unit vertical in 20 units horizontal (5-percent slope), *ramps* complying with Section 1012 shall be used. Where the difference in elevation is 6 inches (152 mm) or less, the *ramp* shall be equipped with either *handrails* or floor finish materials that contrast with adjacent floor finish materials.

Exceptions:

1. A single step with a maximum riser height of 7 inches (178 mm) is permitted for buildings with occupancies in Groups F, H, R-2, R-3, S and U at exterior doors not required to be *accessible* by Chapter 11.
2. A *stair* with a single riser or with two risers and a tread is permitted at locations not required to be *accessible* by Chapter 11 and not within a stairway with two or more flights of stairs, where the risers and treads comply with Section 1011.5, the minimum depth of the tread is 13 inches (330 mm) and not less than one *handrail* complying with Section 1014 is provided within 30 inches (762 mm) of the centerline of the normal path of egress travel on the *stair*.
3. A step is permitted in *aisles* serving seating that has a difference in elevation less than 12 inches (305 mm) at locations not required to be *accessible* by Chapter 11, provided that the risers and treads comply with Section 1029.14 and the *aisle* is provided with a *handrail* complying with Section 1029.16.

Throughout a story in a Group I-2 occupancy, any change in elevation in portions of the *means of egress* that serve nonambulatory persons shall be by means of a *ramp* or sloped walkway.

1003.6 Means of egress continuity. The path of egress travel along a *means of egress* shall not be interrupted by a building element other than a *means of egress* component as specified in this chapter. Obstructions shall not be placed in the minimum width or required capacity of a *means of egress* component except projections permitted by this chapter. The minimum width or required capacity of a *means of egress* system shall not be diminished along the path of egress travel.

1003.7 Elevators, escalators and moving walks. Elevators, escalators and moving walks shall not be used as a component of a required *means of egress* from any other part of the building.

Exception: Elevators used as an accessible *means of egress* in accordance with Section 1009.4.

DRAFT

SECTION 1004
OCCUPANT LOAD

1004.1 Design occupant load. In determining *means of egress* requirements, the number of occupants for whom *means of egress* facilities are provided shall be determined in accordance with this section.

Interpretation I1004.1: The occupant load factor for occupied roofs is 15 net unless the *construction documents* indicate use other than unconcentrated assembly.

1004.2 Cumulative occupant loads. Where the path of egress travel includes intervening rooms, areas or spaces, cumulative *occupant loads* shall be determined in accordance with this section.

1004.2.1 Intervening spaces or accessory areas. Where occupants egress from one or more rooms, areas or spaces through others, the design *occupant load* shall be the combined *occupant load* of interconnected accessory or intervening spaces. Design of egress path capacity shall be based on the cumulative portion of *occupant loads* of all rooms, areas or spaces to that point along the path of egress travel.

1004.2.2 Adjacent levels for mezzanines. That portion of the *occupant load* of a *mezzanine* with required egress through a room, area or space on an adjacent level shall be added to the *occupant load* of that room, area or space.

1004.2.3 Adjacent stories. Other than for the egress components designed for convergence in accordance with Section 1005.6, the *occupant load* from separate stories shall not be added.

1004.3 Multiple function occupant load. Where an area under consideration contains multiple functions having different occupant load factors, the design *occupant load* for such area shall be based on the floor area of each function calculated independently.

1004.4 Multiple occupancies. Where a building contains two or more occupancies, the *means of egress* requirements shall apply to each portion of the building based on the occupancy of that space. Where two or more occupancies utilize portions of the same *means of egress* system, those egress components shall meet the more stringent requirements of all occupancies that are served.

1004.5 Areas without fixed seating. The number of occupants shall be computed at the rate of one occupant per unit of area as prescribed in Table 1004.5. For areas without *fixed seating*, the occupant load shall be not less than that number determined by dividing the floor area under consideration by the *occupant load* factor assigned to the function of the space as set forth in Table 1004.5. Where an intended function is not listed in Table 1004.5, the *building official* shall establish a function based on a listed function that most nearly resembles the intended function.

Exception: Where *approved* by the *building official*, the actual number of occupants for whom each occupied space, floor or building is designed, although less than those determined by calculation, shall be permitted to be used in the determination of the design *occupant load*.

DRAFT

[W][S] TABLE 1004.5
MAXIMUM FLOOR AREA ALLOWANCES PER OCCUPANT

FUNCTION OF SPACE	OCCUPANT LOAD FACTOR[a]
Accessory storage areas, mechanical equipment room[b]	300 gross
Agricultural building	300 gross
Aircraft hangars	500 gross
Airport terminal Baggage claim Baggage handling Concourse Waiting areas	 20 gross 300 gross 100 gross 15 gross
Assembly Gaming floors (keno, slots, etc.) Exhibit gallery and museum	 11 gross 30 net
Assembly with fixed seats	See Section 1004.6
Assembly without fixed seats Concentrated (chairs only—not fixed) Standing space Unconcentrated (tables and chairs)	 7 net 5 net 15 net
Bowling centers, allow 5 persons for each lane including 15 feet of runway, and for additional areas	7 net
Business areas Concentrated business use areas	150 gross See Section 1004.8
Commercial laboratories	100 gross
Courtrooms—other than fixed seating areas	40 net
Day care	35 net
Dormitories	50 gross
Educational Classroom area Shops, laboratories and other vocational room areas	 20 net 50 net
Exercise rooms	50 gross
Group H-5 fabrication and manufacturing areas	200 gross
Industrial areas	100 gross
Institutional areas Inpatient treatment areas Outpatient areas Sleeping areas	 240 gross 100 gross 120 gross
Kitchens, commercial	200 gross
Library Reading rooms Stack area	 50 net 100 gross
Locker rooms	50 gross
Mall buildings—covered and open	See Section 402.8.2
Mercantile Art gallery Storage, stock, shipping areas	60 gross 30 gross 300 gross
Parking garages	200 gross
Residential	200 gross
Skating rinks, swimming pools Rink and pool Decks	 50 gross 15 gross
Stages and platforms	15 net
Warehouses	500 gross

For SI: 1 foot = 304.8 mm, 1 square foot = 0.0929 m^2.

a. Floor area in square feet per occupant.

b. For electrical equipment areas, see also Sections 110.26 and 110.32 through 110.34 of the Seattle Electrical Code.

DRAFT

1004.5.1 Increased occupant load. The *occupant load* permitted in any building, or portion thereof, is permitted to be increased from that number established for the occupancies in Table 1004.5, provided that all other requirements of the code are met based on such modified number and the *occupant load* does not exceed one occupant per 7 square feet (0.65 m^2) of occupiable floor space. Where required by the *building official*, an *approved aisle*, seating or fixed equipment diagram substantiating any increase in *occupant load* shall be submitted. Where required by the *building official*, such diagram shall be posted.

1004.6 Fixed seating. For areas having *fixed seats* and *aisles*, the *occupant load* shall be determined by the number of *fixed seats* installed therein. The *occupant load* for areas in which *fixed seating* is not installed, such as waiting spaces, shall be determined in accordance with Section 1004.5 and added to the number of *fixed seats*.

The *occupant load* of *wheelchair spaces* and the associated companion seat shall be based on one occupant for each *wheelchair space* and one occupant for the associated companion seat provided in accordance with Section 1108.2.3.

For areas having *fixed seating* without dividing arms, the *occupant load* shall be not less than the number of seats based on one person for each 18 inches (457 mm) of seating length.

The *occupant load* of seating booths shall be based on one person for each 24 inches (610 mm) of booth seat length measured at the backrest of the seating booth.

1004.7 Outdoor areas. *Yards*, patios, occupied roofs, *courts* and similar outdoor areas accessible to and usable by the building occupants shall be provided with *means of egress* as required by this chapter. The *occupant load* of such outdoor areas shall be assigned by the *building official* in accordance with the anticipated use. Where outdoor areas are to be used by persons in addition to the occupants of the building, and the path of egress travel from the outdoor areas passes through the building, *means of egress* requirements for the building shall be based on the sum of the *occupant loads* of the building plus the outdoor areas.

Exceptions:

1. Outdoor areas used exclusively for service of the building need only have one *means of egress*.
2. Both outdoor areas associated with Group R-3 and individual dwelling units of Group R-2.

1004.8 Concentrated business use areas. The occupant load factor for concentrated business use shall be applied to telephone call centers, trading floors, electronic data processing centers and similar business use areas with a higher density of occupants than would normally be expected in a typical business occupancy environment. Where approved by the *building official*, the occupant load for concentrated business use areas shall be the actual *occupant load*, but not less than one occupant per 50 square feet (4.65 m^2) of gross occupiable floor space.

1004.9 Posting of occupant load. Every room or space that is an assembly occupancy shall have the *occupant load* of the room or space posted in a conspicuous place, near the main *exit* or *exit access doorway* from the room or space, for the intended configurations. Posted signs shall be of an approved legible permanent design and shall be maintained by the owner or the owner's authorized agent.

DRAFT

SECTION 1005
MEANS OF EGRESS SIZING

1005.1 General. All portions of the *means of egress* system shall be sized in accordance with this section.

Exception: *Aisles* and *aisle accessways* in rooms or spaces used for assembly purposes complying with Section 1029.

[S] 1005.2 Minimum width based on component. The minimum width, in inches (mm), of any *means of egress* components shall be not less than that specified for such component, elsewhere in this code. The width at any point in the path of egress travel shall not be less than the width required for doors in Section 1010.

Exceptions:

1. *Aisles* and *aisle accessways* complying with Section 1018.
2. Corridors complying with Section 1020.2.
3. Stage stairways and catwalks complying with Section 410.6.

1005.3 Required capacity based on occupant load. The required capacity, in inches (mm), of the *means of egress* for any room, area, space or story shall be not less than that determined in accordance with Sections 1005.3.1 and 1005.3.2:

1005.3.1 Stairways. The capacity, in inches, of *means of egress stairways* shall be calculated by multiplying the *occupant load* served by such *stairways* by a means of egress capacity factor of 0.3 inch (7.6 mm) per occupant. Where *stairways* serve more than one story, only the occupant load of each story considered individually shall be used in calculating the required capacity of the *stairways* serving that story.

Exceptions:

1. For other than Group H and I-2 occupancies, the capacity, in inches, of *means of egress stairways* shall be calculated by multiplying the *occupant load* served by such *stairways* by a means of egress capacity factor of 0.2 inch (5.1 mm) per occupant in buildings equipped throughout with an automatic sprinkler system installed in accordance with Section 903.3.1.1 or 903.3.1.2 and an *emergency voice/alarm communication* system in accordance with Section 907.5.2.2.
2. Facilities with *smoke-protected assembly seating* shall be permitted to use the capacity factors in Table 1029.6.2 indicated for stepped aisles for *exit access* or *exit stairways* where the entire path for *means of egress* from the seating to the *exit discharge* is provided with a smoke control system complying with Section 909.
3. Facilities with *open-air assembly seating* shall be permitted to the capacity factors in Section 1029.6.3 indicated for stepped aisles for *exit access* or *exit stairways* where the entire path for *means of egress* from the seating to the *exit discharge* is open to the outdoors.

1005.3.2 Other egress components. The capacity, in inches, of *means of egress* components other than *stairways* shall be calculated by multiplying the *occupant load* served by such component by a means of egress capacity factor of 0.2 inch (5.1 mm) per occupant.

Exceptions:

1. For other than Group H and I-2 occupancies, the capacity, in inches, of *means of egress* components other than *stairways* shall be calculated by multiplying the *occupant load* served by such component by a means of egress capacity factor of 0.15 inch (3.8 mm) per occupant in buildings equipped throughout with an automatic sprinkler system installed in accor101.4.7dance with Section 903.3.1.1 or 903.3.1.2 and an *emergency voice/alarm communication* system in accordance with Section 907.5.2.2.
2. Facilities with *smoke-protected assembly seating* shall be permitted to use the capacity factors in Table 1029.6.2 indicated for level or ramped *aisles* for *means of egress* components other than *stairways* where the entire path for *means of egress* from the seating to the *exit discharge* is provided with a smoke control system complying with Section 909.
3. Facilities with *open-air assembly seating* shall be permitted to the capacity factors in Section 1029.6.3 indicated for level or ramped *aisles* for *means of egress* components other than *stairways* where the entire path for *means of egress* from the seating to the *exit discharge* is open to the outdoors.

1005.4 Continuity. The minimum width or required capacity of the *means of egress* required from any story of a building shall not be reduced along the path of egress travel until arrival at the public way.

1005.5 Distribution of minimum width and required capacity. Where more than one *exit*, or access to more than one *exit*, is required, the *means of egress* shall be configured such that the loss of any one *exit*, or access to one *exit*, shall not reduce the available capacity or width to less than 50 percent of the required capacity or width.

[S] 1005.6 Egress convergence. Where the *means of egress* from stories above and below converge at an intermediate level, the capacity of the *means of egress* from the point of convergence shall be not less than the largest minimum width or the sum of the required capacities for the *stairways* or *ramps* serving the two adjacent stories, whichever is larger.

Exception: The capacity necessary for parking uses need not be considered.

1005.7 Encroachment. Encroachments into the required *means of egress* width shall be in accordance with the provisions of this section.

1005.7.1 Doors. Doors, when fully opened, shall not reduce the required width by more than 7 inches (178 mm). Doors in any position shall not reduce the required width by more than one-half.

Exceptions:

1. Surface-mounted latch release hardware shall be exempt from inclusion in the 7-inch maximum (178 mm) encroachment where both of the following conditions exist:
   1.1. The hardware is mounted to the side of the door facing away from the adjacent wall where the door is in the open position.
   1.2. The hardware is mounted not less than 34 inches (865 mm) nor more than 48 inches (1219 mm) above the finished floor.
2. The restrictions on door swing shall not apply to doors within individual *dwelling units* and *sleeping units* of Group R-2 occupancies and *dwelling units* of Group R-3 occupancies.

1005.7.2 Other projections. *Handrail* projections shall be in accordance with the provisions of Section 1014.8. Other nonstructural projections such as trim and similar decorative features shall be permitted to project into the required width not more than 1-1/2 inches (38 mm) on each side.

DRAFT

Exception: Projections are permitted in corridors within Group I-2 Condition 1 in accordance with Section 407.4.3.

1005.7.3 Protruding objects. Protruding objects shall comply with the applicable requirements of Section 1003.3.

SECTION 1006
NUMBER OF EXITS AND EXIT ACCESS DOORWAYS

1006.1 General. The number of *exits* or *exit access doorways* required within the *means of egress* system shall comply with the provisions of Section 1006.2 for spaces, including *mezzanines*, and Section 1006.3 for *stories* or occupied roofs.

[W] 1006.2 Egress from spaces. Rooms, areas or spaces, including *mezzanines*, within a *story* or *basement* shall be provided with the number of *exits* or access to *exits* in accordance with this section.

1006.2.1 Egress based on occupant load and common path of egress travel distance. Two *exits* or *exit access doorways* from any space shall be provided where the design *occupant load* or the *common path of egress travel* distance exceeds the values listed in Table 1006.2.1. The cumulative *occupant load* from adjacent rooms, areas or spaces shall be determined in accordance with Section 1004.2.

Exceptions:

1. The number of *exits* from foyers, lobbies, vestibules or similar spaces need not be based on cumulative *occupant loads* for areas discharging through such spaces, but the capacity of the *exits* from such spaces shall be based on applicable cumulative *occupant loads*.
2. *Care suites* in Group I-2 occupancies complying with Section 407.4.
3. Unoccupied mechanical rooms and penthouses are not required to comply with the common path of egress travel distance measurement.

[W] TABLE 1006.2.1
SPACES WITH ONE EXIT OR EXIT ACCESS DOORWAY

OCCUPANCY	MAXIMUM OCCUPANT LOAD OF SPACE	MAXIMUM COMMON PATH OF EGRESS TRAVEL DISTANCE (feet)		
		Without Sprinkler System (feet)		With Sprinkler System (feet)
		Occupant Load		
		OL ≤ 30	OL > 30	
A[c], E, M[h]	49	75	75	75[a]
B	49	100	75	100[a]
F	49	75	75	100[a]
H-1, H-2, H-3	3	NP	NP	25[b]
H-4, H-5	10	NP	NP	75[b]
I-1, I-2[d], I-4	10	NP	NP	75[a]
I-3	10	NP	NP	100[a]
R-1	10	NP	NP	75[a]
R-2	20	NP	NP	125[a]
R-3[e]	20	NP	NP	125[a, g]
((~~R-4[e]~~	~~20~~	~~NP~~	~~NP~~	~~125[a, g]~~))
S[f]	29	100	75	100[a]
U	49	100	75	75[a]

For SI: 1 foot = 304.8 mm.
NP = Not Permitted.

a. Buildings equipped throughout with an automatic sprinkler system in accordance with Section 903.3.1.1 or 903.3.1.2. See Section 903 for occupancies where automatic sprinkler systems are permitted in accordance with Section 903.3.1.2.
b. Group H occupancies equipped throughout with an automatic sprinkler system in accordance with Section 903.2.5.
c. For a room or space used for assembly purposes having fixed seating, see Section 1029.8.
d. For the travel distance limitations in Group I-2, see Section 407.4.
e. The common path of egress travel distance shall only apply in a Group R-3 occupancy located in a mixed occupancy building.
f. The length of common path of egress travel distance in a Group S-2 open parking garage shall be not more than 100 feet.
g. For the travel distance limitations in Groups R-3 ((~~and R-4~~)) equipped throughout with an automatic sprinkler system in accordance with Section 903.3.1.3, see Section 1006.2.2.6.
h. Day care facilities, rooms or spaces where care is provided for more than 10 children that are 2-1/2 years of age or less, shall have access to not less than two exits or exit access doorways.

DRAFT

1006.2.1.1 Three or more exits or exit access doorways. Three *exits* or *exit access doorways* shall be provided from any space with an occupant load of 501 to 1,000. Four *exits* or *exit access doorways* shall be provided from any space with an occupant load greater than 1,000.

1006.2.2 Egress based on use. The numbers of *exits* or access to *exits* shall be provided in the uses described in Sections 1006.2.2.1 through 1006.2.2.6.

1006.2.2.1 Boiler, incinerator and furnace rooms. Two *exit access doorways* are required in boiler, incinerator and furnace rooms where the area is over 500 square feet (46 m^2) and any fuel-fired equipment exceeds 400,000 British thermal units (Btu) (422 000 KJ) input capacity. Where two *exit access doorways* are required, one is permitted to be a fixed ladder or an *alternating tread device*. *Exit access doorways* shall be separated by a horizontal distance equal to one-half the length of the maximum overall diagonal dimension of the room.

1006.2.2.2 Refrigeration machinery rooms. Machinery rooms larger than 1,000 square feet (93 m^2) shall have not less than two *exits* or *exit access doorways*. Where two *exit access doorways* are required, one such doorway is permitted to be served by a fixed ladder or an *alternating tread device*. *Exit access doorways* shall be separated by a horizontal distance equal to one-half the maximum horizontal dimension of the room.

All portions of machinery rooms shall be within 150 feet (45 720 mm) of an *exit* or *exit access doorway*. An increase in *exit access* travel distance is permitted in accordance with Section 1017.1.

Exit and *exit access doorways* shall swing in the direction of egress travel, regardless of the *occupant load* served. *Exit* and *exit access doorways* shall be tight fitting and self-closing.

1006.2.2.3 Refrigerated rooms or spaces. Rooms or spaces having a floor area larger than 1,000 square feet (93 m^2), containing a refrigerant evaporator and maintained at a temperature below 68°F (20°C), shall have access to not less than two *exits* or *exit access doorways*.

Exit access travel distance shall be determined as specified in Section 1017.1, but all portions of a refrigerated room or space shall be within 150 feet (45 720 mm) of an *exit* or *exit access doorway* where such rooms are not protected by an approved *automatic sprinkler system*. Egress is allowed through adjoining refrigerated rooms or spaces.

Exception: Where using refrigerants in quantities limited to the amounts based on the volume set forth in the *International Mechanical Code*.

[W] 1006.2.2.4 RESERVED. ((~~Group I-4 means of egress.~~ ~~Group I-4 facilities, rooms or spaces where care is provided for more than 10 children that are 2-1/2 years of age or less, shall have access to not less than two *exits* or *exit access doorways*.~~))

1006.2.2.5 Vehicular ramps. Vehicular ramps shall not be considered as an *exit access ramp* unless pedestrian facilities are provided.

((~~1006.2.2.6 Groups R-3 and R-4.~~ ~~Where Group R-3 occupancies are permitted by Section 903.2.8 to be protected by an *automatic sprinkler system* installed in accordance with Section 903.3.1.3, the *exit access* travel distance for Group R-3 shall be not more than 125 feet (38 100 mm). Where Group R-4 occupancies are permitted by Section 903.2.8 to be protected by an *automatic sprinkler system* installed in accordance with Section 903.3.1.3, the *exit access* travel distance for Group R-4 shall be not more than 75 feet (22 860 mm).~~))

1006.2.2.6 Electrical equipment rooms. Rooms containing electrical equipment shall be provided with a second exit or exit access doorways as required by NFPA 70 Article 110 where all of the following apply:

1. The electrical equipment is rated at 1,200 amperes or more.
2. The electrical equipment is over 6 feet (1829 mm) wide.
3. The electrical equipment contains overcurrent devices, switching devices or control devices.

[S] 1006.3 Egress from stories or occupied roofs. The *means of egress* system serving any *story* or occupied roof shall be provided with the number of separate and distinct *exits* or access to *exits* based on the aggregate *occupant load* served in accordance with this section. Horizontal exits shall not count toward the required number of exits from the *story* or roof. Where *stairways* serve more than one *story*, only the occupant load of each *story* considered individually shall be used in calculating the required number of *exits* or access to *exits* serving that *story*.

Note: In high-rise buildings required to have an additional exit stairway by Section 403.5.2, all exit stairways must be accessible to all tenants on a floor without having to pass through another tenant space.

1006.3.1 Adjacent story. The path of egress travel to an *exit* shall not pass through more than one adjacent *story*.

Exception: The path of egress travel to an *exit* shall be permitted to pass through more than one adjacent *story* in any of the following:

DRAFT

1. In Group R-1, R-2 or R-3 occupancies, exit access stairways and ramps connecting four stories or less serving and contained within an individual dwelling unit, sleeping unit or live/work unit.
2. Exit access stairways serving and contained within a Group R-3 congregate residence or a Group R-4 facility.
3. Exit access stairways and ramps in open parking garages that serve only the parking garage.
4. Exit access stairways and ramps serving open-air assembly seating complying with the exit access travel distance requirements of Section 1029.7.
5. Exit access stairways and ramps between the balcony, gallery or press box and the main assembly floor in occupancies such as theaters, places of religious worship, auditoriums and sports facilities.

1006.3.2 Egress based on occupant load. Each *story* and occupied roof shall have the minimum number of separate and distinct *exits*, or access to *exits*, as specified in Table 1006.3.2. A single *exit* or access to a single *exit* shall be permitted in accordance with Section 1006.3.3. The required number of *exits*, or *exit access stairways* or *ramps* providing access to *exits*, from any *story* or occupied roof shall be maintained until arrival at the *exit discharge* or a *public way*.

TABLE 1006.3.2
MINIMUM NUMBER OF EXITS OR ACCESS TO EXITS PER STORY

OCCUPANT LOAD PER STORY	MINIMUM NUMBER OF EXITS OR ACCESS TO EXITS FROM STORY
1-500	2
501-1,000	3
More than 1,000	4

[W][S] 1006.3.3 Single exits. A single *exit* or access to a single *exit* shall be permitted from any *story* or occupied roof where one of the following conditions exists:

1. The *occupant load*, number of *dwelling units* and ((~~common path of egress~~)) exit access travel distance within the portion of the building served by the single exit do not exceed the values in Table 1006.3.3(1) or 1006.3.3(2).
2. Rooms, areas and spaces complying with Section 1006.2.1 with *exits* that discharge directly to the exterior at the *level of exit discharge*, are permitted to have one *exit* or access to a single *exit*.
3. Parking garages where vehicles are mechanically parked shall be permitted to have one *exit* or access to a single *exit*.
4. Group R-3 ((~~and R-4~~)) occupancies shall be permitted to have one *exit* or access to a single *exit*.
5. Individual single-story or multistory *dwelling units* shall be permitted to have a single exit or access to a single *exit* from the *dwelling unit* provided that both of the following criteria are met:
   - 5.1. The *dwelling unit* complies with Section 1006.2.1 as a space with one *means of egress*.
   - 5.2. Either the *exit* from the *dwelling unit* discharges directly to the exterior at the *level of exit discharge*, or the *exit access* outside the dwelling unit's entrance door provides access to not less than two approved independent *exits*.
6. Occupied roofs with an occupant load of ten or less are permitted to have a single exit or access to a single exit.
7. Not more than 5 *stories* of Group R-2 occupancy are permitted to be served by a single exit under the following conditions:
   - 7.1. The building has not more than six *stories above grade plane*.
   - 7.2. The building does not contain a *boarding house*.
   - 7.3. There shall be no more than four *dwelling units* on any floor.
   - 7.4. The building shall be of not less than one hour fire-resistive construction and shall also be equipped throughout with an *automatic sprinkler system* in accordance with Section 903.3.1.1. Residential-type sprinklers shall be used in all habitable spaces in each *dwelling unit*.
   - 7.5. There shall be no more than two single exit stairway conditions on the same property.
   - 7.6. An exterior stairway or interior exit stairway shall be provided. The interior exit stairway, including any related *exit passageway*, shall be pressurized in accordance with Section 909.20. Doors in the stairway shall swing into the interior exit stairway regardless of the occupant load served, provided that doors from the interior exit stairway to the building exterior are permitted to swing in the direction of exit travel.
   - 7.7. A *corridor* shall separate each *dwelling unit* entry/exit door from the door to an interior exit stairway, including any related *exit passageway*, on each floor. *Dwelling unit* doors shall not open directly into an interior exit stairway. *Dwelling unit* doors are permitted to open directly into an exterior stairway.

DRAFT

7.8. There shall be no more than 20 feet (6096 mm) of travel to the exit stairway from the entry/exit door of any dwelling unit.

7.9. Travel distance measured in accordance with Section 1017 shall not exceed 125 feet.

7.10. The exit shall not terminate in an egress *court* where the *court* depth exceeds the *court* width unless it is possible to exit in either direction to the public way.

7.11. Elevators shall be pressurized in accordance with Section 909.21 or shall open into elevator lobbies that comply with Section 713.14. Where *approved* by the *building official*, natural ventilation is permitted to be substituted for pressurization where the ventilation would prevent the accumulation of smoke or toxic gases.

7.12. Other occupancies are permitted in the same building provided they comply with all the requirements of this code. Other occupancies shall not communicate with the Group R occupancy portion of the building or with the single-exit stairway.

Exception: Parking garages accessory to the Group R occupancy are permitted to communicate with the exit stairway.

7.13. The exit serving the Group R occupancy shall not discharge through any other occupancy, including an accessory parking garage.

7.14. There shall be no openings within 10 feet (3048 mm) of unprotected openings into the stairway other than required exit doors having a one-hour fire-resistance rating.

TABLE 1006.3.3(1)
STORIES WITH ONE EXIT OR ACCESS TO ONE EXIT FOR R-2 OCCUPANCIES

STORY	OCCUPANCY	MAXIMUM NUMBER OF DWELLING UNITS	MAXIMUM ((~~COMMON PATH OF EGRESS~~)) EXIT ACCESS TRAVEL DISTANCE
Basement, first, second or third story above grade plane	R-2[a, b]	4 dwelling units	125 feet
Fourth story above grade plane and higher	NP	NA	NA

For SI: 1 foot = 3048 mm.
NP = Not Permitted.
NA = Not Applicable.
a. Buildings classified as Group R-2 equipped throughout with an automatic sprinkler system in accordance with Section 903.3.1.1 or 903.3.1.2 and provided with emergency escape and rescue openings in accordance with Section 1030.
b. This table is used for R-2 occupancies consisting of dwelling units. For R-2 occupancies consisting of sleeping units, use Table 1006.3.3(2).

TABLE 1006.3.3(2)
STORIES WITH ONE EXIT OR ACCESS TO ONE EXIT FOR OTHER OCCUPANCIES

STORY	OCCUPANCY	MAXIMUM OCCUPANT LOAD PER STORY	MAXIMUM ((~~COMMON PATH OF EGRESS~~)) EXIT ACCESS TRAVEL DISTANCE (feet)
First story above or below grade plane	A, B[b], E F[b], M, U	49	75
	H-2, H-3	3	25
	H-4, H-5, I, R-1, R-2[a, c]	10	75
	S[b, d]	29	75
Second story above grade plane	B, F, M, S[d]	29	75
Third story above grade plane and higher	NP	NA	NA

For SI: 1 foot = 304.8 mm.
NP = Not Permitted.
NA = Not Applicable.
a. Buildings classified as Group R-2 equipped throughout with an automatic sprinkler system in accordance with Section 903.3.1.1 or 903.3.1.2 and provided with emergency escape and rescue openings in accordance with Section 1030.
b. Group B, F and S occupancies in buildings equipped throughout with an automatic sprinkler system in accordance with Section 903.3.1.1 shall have a maximum exit access travel distance of 100 feet.
c. This table is used for R-2 occupancies consisting of sleeping units. For R-2 occupancies consisting of dwelling units, use Table 1006.3.3(1).
d. The length of exit access travel distance in a Group S-2 open parking garage shall be not more than 100 feet.

1006.3.3.1 Mixed occupancies. Where one *exit*, or *exit access stairway* or *ramp* providing access to *exits* at other *stories*, is permitted to serve individual *stories*, mixed occupancies shall be permitted to be served by single *exits* provided each individual occupancy complies with the applicable requirements of Table 1006.3.3(1) or 1006.3.3(2) for that occupancy. Where applicable, cumulative *occupant loads* from adjacent occupancies shall be considered to be in accordance with the provisions of Section 1004.1. In each *story* of a mixed occupancy building, the maximum number of occupants served by a single *exit* shall be such that the sum of the ratios of the calculated number of occupants of the space divided by the

DRAFT

allowable number of occupants indicated in Table 1006.3.3(2) for each occupancy does not exceed one. Where *dwelling units* are located on a story with other occupancies, the actual number of *dwelling units* divided by four plus the ratio from the other occupancy does not exceed one.

SECTION 1007
EXIT AND EXIT ACCESS DOORWAY CONFIGURATION

[S] 1007.1 General. *Exits*, *exit access doorways*, and *exit access stairways* and *ramps* serving spaces, including individual building *stories*, shall be separated in accordance with the provisions of this section. Interlocking or scissor stairs and stairways that share a wall with other interior exit stairways shall be counted as one exit or exit access.

1007.1.1 Two exits or exit access doorways. Where two *exits*, *exit access doorways*, *exit access stairways* or *ramps*, or any combination thereof, are required from any portion of the *exit access*, they shall be placed a distance apart equal to not less than one-half of the length of the maximum overall diagonal dimension of the building or area to be served measured in a straight line between them. ((~~Interlocking or *scissor stairways* shall be counted as one *exit stairway*.~~))

Exceptions:

1. Where interior *exit stairways* or *ramps* are interconnected by a 1-hour fire-resistance-rated corridor conforming to the requirements of Section 1020, the required exit separation shall be measured along the shortest direct line of travel within the corridor.

Interpretation I1007.1: Exception 1 applies only where *corridors* have a one-hour fire-resistance-rating even where Section 1020 would allow non-rated *corridors*.

2. Where a building is equipped throughout with an *automatic sprinkler system* in accordance with Section 903.3.1.1 or 903.3.1.2, the separation distance shall be not less than one-third of the length of the maximum overall diagonal dimension of the area served.
3. Where it is not practical to separate exits by one-half the diagonal dimension, exits from retail and office tenant spaces in Group B and M occupancies and within *dwelling units* shall be as far apart as reasonably practicable as determined by the *building official*.

Note: Interior exit stairways in high-rise buildings shall also meet the requirements of Section 403.5.1.

1007.1.1.1 Measurement point. The separation distance required in Section 1007.1.1 shall be measured in accordance with the following:

1. The separation distance to *exit* or *exit access doorways* shall be measured to any point along the width of the doorway.
2. The separation distance to *exit access stairways* shall be measured to any point along the width of the closest riser.
3. The separation distance to *exit access ramps* shall be measured to any point along the width of the start of the ramp run.

Interpretation I1007.1.1.1: In items 1-3, separation distance is permitted to be measured to the farthest point.

1007.1.2 Three or more exits or exit access doorways. Where access to three or more *exits* is required, not less than two *exit* or *exit access doorways* shall be arranged in accordance with the provisions of Section 1007.1.1. Additional required *exit* or *exit access doorways* shall be arranged a reasonable distance apart so that if one becomes blocked, the others will be available.

1007.1.3 Remoteness of exit access stairways or ramps. Where two *exit access stairways* or *ramps* provide the required *means of egress* to *exits* at another *story*, the required separation distance shall be maintained for all portions of such *exit access stairways* or *ramps*.

1007.1.3.1 Three or more exit access stairways or ramps. Where more than two *exit access stairways* or *ramps* provide the required *means of egress*, not less than two shall be arranged in accordance with Section 1007.1.3.

SECTION 1008
MEANS OF EGRESS ILLUMINATION

[S] 1008.1 Means of egress illumination. Illumination shall be provided at every point in the *means of egress* in accordance with Section 1008.2. Under emergency power, means of egress illumination shall comply with Section 1008.3.

DRAFT

1008.2 Illumination required. The *means of egress* serving a room or space shall be illuminated at all times that the room or space is occupied.

Exceptions:

1. Occupancies in Group U.
2. *Aisle accessways* in Group A.
3. *Dwelling units* and *sleeping units* in Groups R-1, R-2 and R-3.
4. *Sleeping units* of Group I occupancies.

1008.2.1 Illumination level under normal power. The *means of egress* illumination level shall be not less than 1 footcandle (11 lux) at the walking surface. Luminaires shall be installed whenever exit signs are required by Section 1013.

Exception: For auditoriums, theaters, concert or opera halls and similar assembly occupancies, the illumination at the walking surface is permitted to be reduced during performances by one of the following methods provided that the required illumination is automatically restored upon activation of a premises' fire alarm system:

1. Externally illuminated walking surfaces shall be permitted to be illuminated to not less than 0.2 footcandle (2.15 lux).
2. Steps, landings and the sides of ramps shall be permitted to be marked with self-luminous materials in accordance with Sections 1025.2.1, 1025.2.2 and 1025.2.4 by systems *listed* in accordance with UL 1994.

1008.2.2 Group I-2. In Group I-2 occupancies where two or more exits are required, on the exterior landings required by Section 1010.1.6, means of egress illumination levels for the exit discharge shall be provided such that failure of a single lamp in a luminaire shall not reduce the illumination level on that landing to less than 1 footcandle (11 lux).

Code Alternate CA1008.2: Compliance with the following paragraphs will be deemed to satisfy the requirement for means of egress illumination at every point in the means of egress. Means of egress illumination systems that comply with this Code Alternate shall also comply with Section 1008.3.

1. **Location and fixture placement.** Means of egress illumination shall be located in stairways, *corridor*s, halls, passenger elevator cars, lobbies, rooms with an occupant load of 100 or more, and other areas required to provide safe egress from the premises and immediately outside of the building exit when required by the *building official*. Fixtures shall be installed to not less than the following schedule:

1.1	Interior and exterior stairways and landings and outside building exit	At least one per landing
1.2	Corridors and halls and designated means of egress paths in parking garages	At least one for each 40 lineal feet
1.3	Lobbies, vestibules, foyers, elevator cars and other similar areas as required	At least one for each 250 square feet
1.4	Warehouses	See Item 2 below.

These fixtures are permitted to be included in the watts per square foot calculation for means of egress illumination.

2. **Amount of Illumination.** Where means of egress illumination is required, illumination shall be provided at the rate of 0.1 watts of fluorescent or 0.05 watts of LED illumination per square foot of area. Installations using incandescent lamps shall have a minimum wattage of at least 3 times the fluorescent requirements. Use of other light sources is subject to the approval of the *building official*.

Exceptions:

1. In warehouses, the allowable minimum illumination is permitted to be 0.1 watt per square foot (0.03 watts for fluorescent or 0.02 watts for LED) provided fixtures are placed either:
   - 1.1 Where means of egress pathways are not designated, fixtures shall be placed to cover an area not larger than 1,600 square feet, or
   - 1.2 Where means of egress pathways are designated, fixtures shall be placed at least one for every 40 lineal feet.
2. In theaters, auditoriums or other places of assembly where motion pictures or other projections are made by means of directed light, the minimum allowable illumination is permitted to be reduced to 0.05 watts per square foot of floor area (0.02 watts for fluorescent or 0.01 watts for LED). The higher level of required illumination shall be automatically restored upon activation of a premises fire alarm system where such system is provided.
3. In Groups B, F-1, M and S-1 occupancies, when *approved* by the *building official*, the minimum allowable illumination in the exit access is permitted to be reduced to 0.05 watts per square foot (0.02 watts for fluorescent or 0.01 watts for LED) of floor area.

DRAFT

4. In Group B occupancies and open parking garages, when *approved* by the *building official*, the illumination is permitted to be eliminated when within 50 feet of a window wall or open side and where light is not totally obscured.

Means of egress illumination fixtures shall be spaced and designed to give adequate distribution of light for safe egress and so that the failure of any individual lighting element, such as the burning out of a light bulb, will not leave any space in total darkness. Illumination from battery-operated fixtures shall provide the same level of illumination required for hard-wired fixtures.

[W] ((~~1008.2.3 Exit discharge.~~ ~~Illumination shall be provided along the path of travel for the *exit discharge* from each *exit* to the *public way*.~~

~~**Exception:** Illumination shall not be required where the path of the *exit discharge* meets both of the following requirements:~~

~~1. The path of exit discharge is illuminated from the exit to a safe dispersal area complying with Section 1028.5.~~

~~2. A dispersal area shall be illuminated to a level not less than 1 footcandle (11 lux) at the walking surface.~~))

[S] 1008.3 ((~~Emergency power~~)) Power supply for illumination. The power supply for means of egress illumination shall normally be provided by the premises' electrical supply.

1008.3.1 General. In the event of power supply failure in rooms and spaces that require two or more means of egress, an emergency ((~~electrical~~)) power system shall automatically illuminate all of the following areas:

1. *Aisles.*
2. *Corridors.*
3. *Exit access stairways* and *ramps.*

1008.3.2 Buildings. In the event of power supply failure in buildings that require two or more *means of egress*, an emergency electrical system shall automatically illuminate all of the following areas:

1. *Interior exit access stairways* and *ramps*.
2. *Interior* and *exterior exit stairways* and *ramps*.
3. *Exit passageways.*
4. Vestibules and areas on the level of discharge used for *exit discharge* in accordance with Section 1028.1.
5. Exterior landings as required by Section 1010.1.6 for *exit doorways* that lead directly to the e*xit discharge*.

1008.3.3 Rooms and spaces. In the event of power supply failure, an emergency electrical system shall automatically illuminate all of the following areas:

1. Electrical equipment rooms.
2. Fire command centers.
3. Fire pump rooms.
4. Generator rooms.
5. Public restrooms with an area greater than 300 square feet (27.87 m^2).

1008.3.4 Duration. The emergency power system shall provide power for a duration of not less than 90 minutes and shall consist of storage batteries, unit equipment or an on-site generator. The installation of the emergency power system shall be in accordance with Section 2702.

1008.3.5 Illumination level under emergency power. Emergency lighting facilities shall be arranged to provide initial illumination that is not less than an average of 1 footcandle (11 lux) and a minimum at any point of 0.1 footcandle (1 lux) measured along the path of egress at floor level. Illumination levels shall be permitted to decline to 0.6 footcandle (6 lux) average and a minimum at any point of 0.06 footcandle (0.6 lux) at the end of the emergency lighting time duration. A maximum-to-minimum illumination uniformity ratio of 40 to 1 shall not be exceeded. In Group I-2 occupancies, failure of a single lamp in a luminaire shall not reduce the illumination level to less than 0.2 footcandle (2.2 lux).

SECTION 1009
ACCESSIBLE MEANS OF EGRESS

[W] 1009.1 Accessible means of egress required. *Accessible means of egress* shall comply with this section. *Accessible* spaces shall be provided with not less than one *accessible means of egress*. Where more than one *means of egress* is required by Section 1006.2 or 1006.3 from any *accessible* space, each *accessible* portion of the space shall be served by not less than two *accessible means of egress*.

DRAFT

Exceptions:

1. Accessible means of egress are not required to be provided in existing buildings.

((~~1~~)) 2. One *accessible means of egress* is required from an *accessible mezzanine* level in accordance with Section 1009.3, 1009.4 or 1009.5.

((~~2~~)) 3. In assembly areas with ramped *aisles* or stepped *aisles*, one *accessible means of egress* is permitted where the *common path of egress travel* is *accessible* and meets the requirements in Section 1029.8.

4. In parking garages, accessible *means of egress* are not required to serve parking areas that do not contain accessible parking spaces.

1009.2 Continuity and components. Each required *accessible means of egress* shall be continuous to a *public way* and shall consist of one or more of the following components:

1. *Accessible routes* complying with Section 1104.
2. *Interior exit stairways* complying with Sections 1009.3 and 1023.
3. *Exit access stairways* complying with Sections 1009.3 and 1019.3 or 1019.4.
4. *Exterior exit stairways* complying with Sections 1009.3 and 1027 and serving levels other than the *level of exit discharge*.
5. Elevators complying with Section 1009.4.

Interpretation I1009.2a: An *exit passageway* is not required on the level of exit discharge to connect the elevator with the exterior exit door.

6. Platform lifts complying with Section 1009.5.
7. *Horizontal exits* complying with Section 1026.
8. *Ramps* complying with Section 1012.
9. *Areas of refuge* complying with Section 1009.6.
10. Exterior areas for assisted rescue complying with Section 1009.7 serving exits at the *level of exit discharge*.

1009.2.1 Elevators required. In buildings where a required *accessible* floor is four or more *stories* above or below a *level of exit discharge*, not less than one required *accessible means of egress* shall be an elevator complying with Section 1009.4.

Interpretation I1009.2b: The level of exit discharge is not counted when determining whether an accessible floor is four *stories* above or below a level of exit discharge. See Figure 1009.2.b.

Exceptions:

1. In buildings equipped throughout with an *automatic sprinkler system* installed in accordance with Section 903.3.1.1 or 903.3.1.2, the elevator shall not be required on floors provided with a *horizontal exit* and located at or above the *levels of exit discharge.*
2. In buildings equipped throughout with an *automatic sprinkler system* installed in accordance with Section 903.3.1.1 or 903.3.1.2, the elevator shall not be required on floors provided with a *ramp* conforming to the provisions of Section 1012.

Interpretation I1009.2c: In exception 2, the ramp shall be part of an accessible *means of egress.*

1009.3 Stairways. In order to be considered part of an *accessible means of egress*, a *stairway* between *stories* shall comply with Sections 1009.3.1 through 1009.3.3.

1009.3.1 Exit access stairways. *Exit access stairways* that connect levels in the same *story* are not permitted as part of an *accessible means of egress.*

Exception: *Exit access stairways* providing *means of egress* from *mezzanines* are permitted as part of an *accessible means of egress.*

1009.3.2 Stairway width. *Stairways* shall have a clear width of 48 inches (1219 mm) minimum between *handrails*.

Exceptions:

1. The clear width of 48 inches (1219 mm) between *handrails* is not required in buildings equipped throughout with an *automatic sprinkler* system installed in accordance with Section 903.3.1.1 or 903.3.1.2.

DRAFT

2. The clear width of 48 inches (1219 mm) between *handrails* is not required for *stairways* accessed from a refuge area in conjunction with a *horizontal exit*.

1009.3.3 Area of refuge. *Stairways* shall either incorporate an *area of refuge* within an enlarged floor-level landing or shall be accessed from an *area of refuge* complying with Section 1009.6.

Exceptions:

1. *Areas of refuge* are not required at *exit access stairways* where two-way communication is provided at the elevator landing in accordance with Section 1009.8.
2. *Areas of refuge* are not required at *stairways* in buildings equipped throughout with an *automatic sprinkler system* installed in accordance with Section 903.3.1.1 or 903.3.1.2.
3. *Areas of refuge* are not required at *stairways* serving *open parking garages*.
4. *Areas of refuge* are not required for *smoke-protected* or *open-air assembly seating* areas complying with Sections 1029.6.2 and 1029.6.3.
5. *Areas of refuge* are not required at *stairways* in Group R-2 occupancies.
6. *Areas of refuge* are not required for *stairways* accessed from a refuge area in conjunction with a *horizontal exit*.

[S] 1009.4 Elevators. In order to be considered part of an *accessible means of egress*, an elevator shall comply with Sections 1009.4.1 and 1009.4.2.

1009.4.1 Standby power. The elevator shall meet the emergency operation and signaling device requirements of Section 2.27 of ASME A17.1/CSA B44. ((~~Standby~~)) An emergency or *legally required standby power system* shall be provided in accordance with Chapter 27 and ((~~Section 3003~~)) the Seattle Electrical Code for the operation of the elevator, the shunt trip and lighting for elevator cars, control rooms, machine rooms, and machinery spaces.

1009.4.2 Area of refuge. The elevator shall be accessed from an *area of refuge* complying with Section 1009.6.

Exceptions:

1. *Areas of refuge* are not required at the elevator in *open parking garages*.
2. *Areas of refuge* are not required in buildings and facilities equipped throughout with an *automatic sprinkler system* installed in accordance with Section 903.3.1.1 or 903.3.1.2.
3. *Areas of refuge* are not required at elevators not required to be located in a shaft in accordance with Section 712.
4. *Areas of refuge* are not required at elevators serving *smoke-protected* or *open-air assembly seating* areas complying with Sections 1029.6.2 and 1029.6.3.
5. *Areas of refuge* are not required for elevators accessed from a refuge area in conjunction with a *horizontal exit*.

[S] 1009.5 Platform lifts. Platform lifts shall be permitted to serve as part of an *accessible means of egress* where allowed as part of a required *accessible route* in Section 1109.8 except for Item 10. ((~~Standby~~)) A *legally required standby power system* for the platform lift shall be provided in accordance with Chapter 27.

1009.6 Areas of refuge. Every required *area of refuge* shall be accessible from the space it serves by an *accessible means of egress*.

1009.6.1 Travel distance. The maximum travel distance from any *accessible* space to an *area of refuge* shall not exceed the *exit access* travel distance permitted for the occupancy in accordance with Section 1017.1.

1009.6.2 Stairway or elevator access. Every required *area of refuge* shall have direct access to a *stairway* complying with Sections 1009.3 and 1023 or an elevator complying with Section 1009.4.

1009.6.3 Size. Each *area of refuge* shall be sized to accommodate one *wheelchair space* of 30 inches by 48 inches (762 mm by 1219 mm) for each 200 occupants or portion thereof, based on the *occupant load* of the *area of refuge* and areas served by the *area of refuge*. Such *wheelchair spaces* shall not reduce the *means of egress* minimum width or required capacity. Access to any of the required *wheelchair spaces* in an *area of refuge* shall not be obstructed by more than one adjoining *wheelchair space*.

1009.6.4 Separation. Each *area of refuge* shall be separated from the remainder of the story by a *smoke barrier* complying with Section 709 or a *horizontal* exit complying with Section 1026. Each *area of refuge* shall be designed to minimize the intrusion of smoke.

Exceptions:

1. *Areas of refuge* located within an enclosure for *interior exit stairways* complying with Section 1023.
2. *Areas of refuge* in outdoor facilities where *exit access* is essentially open to the outside.

1009.6.5 Two-way communication. *Areas of refuge* shall be provided with a two-way communication system complying with Sections 1009.8.1 and 1009.8.2.

DRAFT

1009.7 Exterior areas for assisted rescue. Exterior areas for assisted rescue shall be accessed by an *accessible route* from the area served.

Where the *exit discharge* does not include an *accessible route* from an *exit* located on the *level of exit discharge* to a *public way*, an exterior area of assisted rescue shall be provided on the exterior landing in accordance with Sections 1009.7.1 through 1009.7.4.

1009.7.1 Size. Each exterior area for assisted rescue shall be sized to accommodate *wheelchair spaces* in accordance with Section 1009.6.3.

1009.7.2 Separation. Exterior walls separating the exterior area of assisted rescue from the interior of the building shall have a minimum *fire-resistance rating* of 1 hour, rated for exposure to fire from the inside. The fire-resistance-rated exterior wall construction shall extend horizontally not less than 10 feet (3048 mm) beyond the landing on either side of the landing or equivalent fire-resistance-rated construction is permitted to extend out perpendicular to the exterior wall not less than 4 feet (1220 mm) on the side of the landing. The *fire-resistance-rated* construction shall extend vertically from the ground to a point not less than 10 feet (3048 mm) above the floor level of the area for assisted rescue or to the roof line, whichever is lower. Openings within such *fire-resistance-rated* exterior walls shall be protected in accordance with Section 716.

Exception: The *fire-resistance rating* and opening protectives are not required in the exterior wall where the building is equipped throughout with an *automatic sprinkler system* installed in accordance with Section 903.3.1.1 or 903.3.1.2.

1009.7.3 Openness. The exterior area for assisted rescue shall be open to the outside air. The sides other than the separation walls shall be not less than 50 percent open, and the open area shall be distributed so as to minimize the accumulation of smoke or toxic gases.

1009.7.4 Stairways. *Stairways* that are part of the *means of egress* for the exterior area for assisted rescue shall provide a minimum clear width of 48 inches (1220 mm) between *handrails*.

Exception: The minimum clear width of 48 inches (1220 mm) between *handrails* is not required at *stairways* serving buildings equipped throughout with an *automatic sprinkler system* installed in accordance with Section 903.3.1.1 or 903.3.1.2.

[W] 1009.8 Two-way communication. A two-way communication system complying with Sections 1009.8.1 and 1009.8.2 shall be provided at the landing serving each elevator or bank of elevators on each accessible floor that is one or more stories above or below the *level of exit discharge*.

Exceptions:

1. Two-way communication systems are not required at the landing serving each elevator or bank of elevators where the two-way communication system is provided within *areas of refuge* in accordance with Section 1009.6.5.
2. Two-way communication systems are not required on floors provided with *ramps* conforming to the provisions of Section 1012.
3. Two-way communication systems are not required at the landings serving only service elevators that are not designated as part of the *accessible means of egress* or serve as part of the required *accessible route* into a facility.
4. Two-way communication systems are not required at the landings serving only freight elevators.
5. Two-way communication systems are not required at the landing serving a private residence elevator.

((~~6. Two-way communication systems are not required in Group I-2 or I-3 facilities.~~))

[S] 1009.8.1 System requirements. Two-way communication systems shall provide communication between each required location and the *fire command center* or a central control point location *approved* by the fire department. Where the central control point is not a *constantly attended location*, a two-way communication system shall have a timed automatic telephone dial-out capability to a monitoring location. ((~~or 9-1-1.~~)) The two-way communication system shall include both audible and visible signals. The two-way communication system shall have a battery backup or an *approved* alternate source of power that is capable of 90 minutes' use upon failure of the normal power source.

1009.8.2 Directions. Directions for the use of the two-way communication system, instructions for summoning assistance via the two-way communication system and written identification of the location shall be posted adjacent to the two-way communication system. Signage shall comply with the ICC A117.1 requirements for visual characters.

1009.9 Signage. Signage indicating special accessibility provisions shall be provided as shown:

1. Each door providing access to an *area of refuge* from an adjacent floor area shall be identified by a sign stating: AREA OF REFUGE.
2. Each door providing access to an exterior area for assisted rescue shall be identified by a sign stating: EXTERIOR AREA FOR ASSISTED RESCUE.

Signage shall comply with the *ICC A117.1* requirements for visual characters and include the International Symbol of Accessibility. Where exit sign illumination is required by Section 1013.3, the signs shall be illuminated. Additionally, visual charac-

DRAFT

ters, raised character and braille signage complying with ICC A117.1 shall be located at each door to an *area of refuge* and exterior area for assisted rescue in accordance with Section 1013.4.

1009.10 Directional signage. Directional signage indicating the location of all other *means of egress* and which of those are *accessible means of egress* shall be provided at the following:

1. At *exits* serving a required *accessible* space but not providing an approved *accessible means of egress*.
2. At elevator landings.
3. Within *areas of refuge*.

1009.11 Instructions. In *areas of refuge* and exterior areas for assisted rescue, instructions on the use of the area under emergency conditions shall be posted. Signage shall comply with the ICC A117.1 requirements for visual characters. The instructions shall include all of the following:

1. Persons able to use the *exit stairway* do so as soon as possible, unless they are assisting others.
2. Information on planned availability of assistance in the use of *stairs* or supervised operation of elevators and how to summon such assistance.
3. Directions for use of the two-way communication system where provided.

SECTION 1010
DOORS, GATES AND TURNSTILES

[S] 1010.1 Doors. *Means of egress* doors shall meet the requirements of this section. Doors serving a *means of egress* system shall meet the requirements of this section and Section 1022.2. Doors provided for egress purposes in numbers greater than required by this code shall meet the requirements of this section. See Section 3201 for doors swinging over public property.

Means of egress doors shall be readily distinguishable from the adjacent construction and finishes such that the doors are easily recognizable as doors. Mirrors or similar reflecting materials shall not be used on *means of egress* doors. *Means of egress* doors shall not be concealed by curtains, drapes, decorations or similar materials.

1010.1.1 Size of doors. The required capacity of each door opening shall be sufficient for the *occupant load* thereof and shall provide a minimum clear opening width of 32 inches (813 mm). The clear opening width of doorways with swinging doors shall be measured between the face of the door and the stop, with the door open 90 degrees (1.57 rad). Where this section requires a minimum clear opening width of 32 inches (813 mm) and a door opening includes two door leaves without a mullion, one leaf shall provide a minimum clear opening width of 32 inches (813 mm). In Group I-2, doors serving as *means of egress* doors where used for the movement of beds shall provide a minimum clear opening width of 41-1/2 inches (1054 mm). The maximum width of a swinging door leaf shall be 48 inches (1219 mm) nominal. The minimum clear opening height of doors shall be not less than 80 inches (2032 mm).

Exceptions:

1. In Group R-2 and R-3 *dwelling* and *sleeping units* that are not required to be an Accessible unit, Type A unit or Type B unit, the minimum and maximum width shall not apply to door openings that are not part of the required *means of egress.*
2. In Group I-3, door openings to resident *sleeping units* that are not required to be an Accessible unit shall have a minimum clear opening width of 28 inches (711 mm).
3. Door openings to storage closets less than 10 square feet (0.93 m^2) in area shall not be limited by the minimum clear opening width.
4. The width of door leaves in revolving doors that comply with Section 1010.1.4.1 shall not be limited.
5. The maximum width of door leaves in *power-operated doors* that comply with Section 1010.1.4.2 shall not be limited.
6. Door openings within a *dwelling unit* or *sleeping unit* shall have a minimum clear opening height of 78 inches (1981 mm).
7. In *dwelling* and *sleeping units* that are not required to be Accessible, Type A or Type B units, exterior door openings other than the required *exit* door shall have a minimum clear opening height of 76 inches (1930 mm).
8. In Groups I-1, R-2, R-3 and R-4, in *dwelling* and *sleeping units* that are not required to be Accessible, Type A or Type B units, the minimum clear opening widths shall not apply to interior egress doors.
9. Door openings required to be *accessible* within Type B units intended for user passage shall have a minimum clear opening width of 31.75 inches (806 mm).

DRAFT

energy power-operated swinging doors shall comply with BHMA A156.19. Low-energy *power-operated* sliding *doors* and low-energy *power-operated* folding *doors* shall comply with BHMA A156.38.

Exceptions:

1. Occupancies in Group I-3.
2. Special purpose horizontal sliding, accordion or folding doors complying with Section 1010.1.4.3.
3. For a biparting door in the emergency breakout mode, a door leaf located within a multiple-leaf opening shall be exempt from the minimum 32-inch (813 mm) single-leaf requirement of Section 1010.1.1, provided that a minimum 32-inch (813 mm) clear opening is provided when the two biparting leaves meeting in the center are broken out.

1010.1.4.3 Special purpose horizontal sliding, accordion or folding doors. In other than Group H occupancies, special purpose horizontal sliding, accordion or folding door assemblies permitted to be a component of a *means of egress* in accordance with Exception 6 to Section 1010.1.2 shall comply with all of the following criteria:

1. The doors shall be power operated and shall be capable of being operated manually in the event of power failure.
2. The doors shall be openable by a simple method from both sides without special knowledge or effort.
3. The force required to operate the door shall not exceed 30 pounds (133 N) to set the door in motion and 15 pounds (67 N) to close the door or open it to the minimum required width.
4. The door shall be openable with a force not to exceed 15 pounds (67 N) when a force of 250 pounds (1100 N) is applied perpendicular to the door adjacent to the operating device.
5. The door assembly shall comply with the applicable *fire protection rating* and, where rated, shall be self-closing or automatic closing by smoke detection in accordance with Section 716.2.6.6, shall be installed in accordance with NFPA 80 and shall comply with Section 716.
6. The door assembly shall have an integrated standby power supply.
7. The door assembly power supply shall be electrically supervised.
8. The door shall open to the minimum required width within 10 seconds after activation of the operating device.

1010.1.4.4 Locking arrangements in educational occupancies. In Group E and Group B educational occupancies, egress doors from classrooms, offices and other occupied rooms shall be permitted to be provided with locking arrangements designed to keep intruders from entering the room where all of the following conditions are met:

1. The door shall be capable of being unlocked from outside the room with a key or other approved means.
2. The door shall be openable from within the room in accordance with Section 1010.1.9.
3. Modifications shall not be made to listed *panic hardware*, fire door hardware or door closers.

1010.1.4.4.1 Remote operation of locks. Remote operation of locks complying with Section 1010.1.4.4 shall be permitted.

1010.1.4.5 Security grilles. In Groups B, F, M and S, horizontal sliding or vertical security grilles are permitted at the main *exit* and shall be openable from the inside without the use of a key or special knowledge or effort during periods that the space is occupied. The grilles shall remain secured in the full-open position during the period of occupancy by the general public. Where two or more *means of egress* are required, not more than one-half of the *exits* or *exit access doorways* shall be equipped with horizontal sliding or vertical security grilles.

[S] 1010.1.5 Floor elevation. There shall be a floor or landing on each side of a door. Such floor or landing shall be at the same elevation on each side of the door. Landings shall be level except for exterior landings, which are permitted to have a slope not to exceed 0.25 unit vertical in 12 units horizontal (2-percent slope).

Exceptions:

1. Doors serving individual *dwelling units* in Groups R-2 and R-3 where the following apply:
   1.1. A door is permitted to open at the top step of ((~~an interior~~)) a *flight* of *stairs*, provided that the door does not swing over the top step.
   1.2. Screen doors and storm doors are permitted to swing over *stairs* or landings.
2. Exterior doors as provided for in Section 1003.5, Exception 1, and Section 1022.2, which are not on an *accessible route*.
3. In Group R-3 occupancies not required to be *Accessible units*, *Type A units* or *Type B units*, the landing at an exterior doorway shall be not more than 7-3/4 inches (197 mm) below the top of the threshold, provided the door, other than an exterior storm or screen door, does not swing over the landing.
4. Variations in elevation due to differences in finish materials, but not more than 1/2 inch (12.7 mm).

DRAFT

5. Exterior decks, patios or balconies that are part of *Type B dwelling units*, have impervious surfaces and that are not more than 4 inches (102 mm) below the finished floor level of the adjacent interior space of the dwelling unit.
6. Doors serving equipment spaces not required to be *accessible* in accordance with Section 1103.2.9 and serving an occupant load of five or less shall be permitted to have a landing on one side to be not more than 7 inches (178 mm) above or below the landing on the egress side of the door.

[S] 1010.1.6 Landings at doors. Landings shall have a width not less than the width of the *stairway* or the door, whichever is greater. Doors in the fully open position shall not reduce a required dimension by more than 7 inches (178 mm). Where a landing serves an *occupant load* of 50 or more, doors in any position shall not reduce the landing to less than one-half its required width. When doors open over landings, doors in any position shall not reduce the landing length to less than 12 inches (305 mm). Landings shall have a length measured in the direction of travel of not less than 44 inches (1118 mm).

Exception: Landing length in the direction of travel in Groups R-3 and U and within individual units of Group R-2 need not exceed 36 inches (914 mm).

Interpretation I1010.1.6: Landing length, width and slope shall be measured as specified in Section 1011.6 and 1011.7.1. See Figures 1010.1.6(1), 1010.1.6(2) and 1010.1.6(3) for illustrations of the requirements of this section.

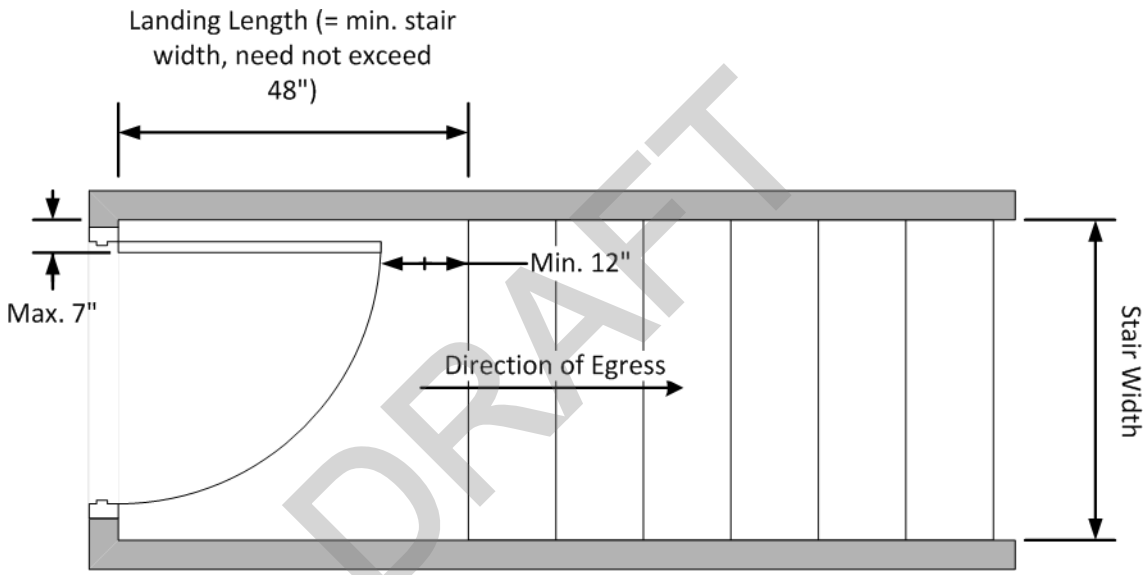

DRAFT

Figure 1010.1.6(1)
Landing dimensions only

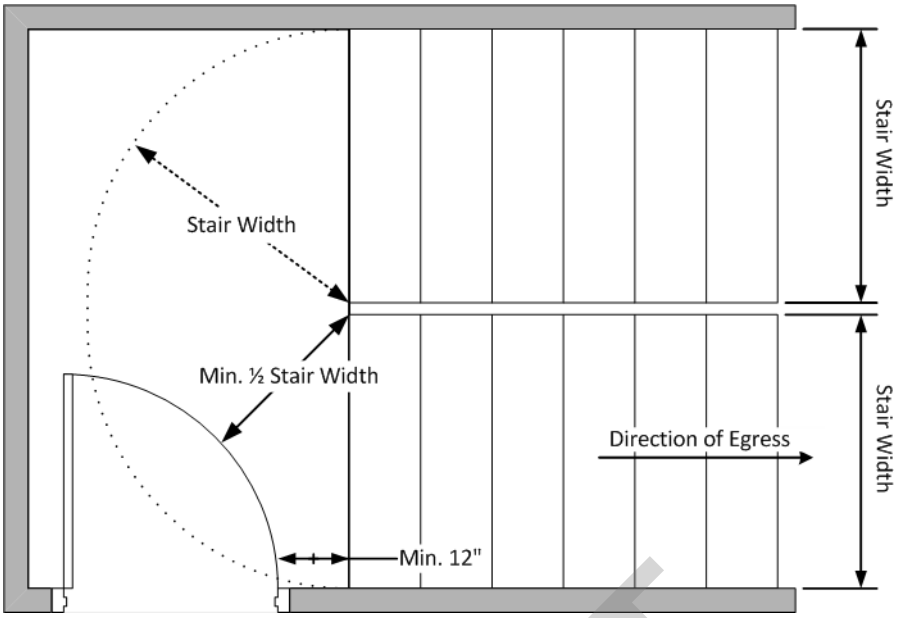

Figure 1010.1.6(2)
Landing dimensions only

DRAFT

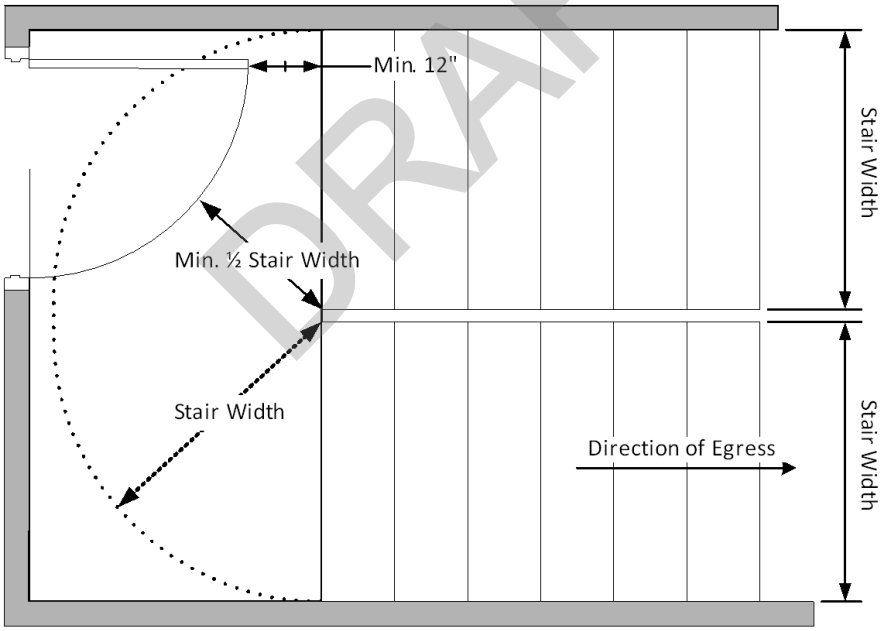

Figure 1010.1.6(3)
Landing dimensions only

1010.1.7 Thresholds. Thresholds at doorways shall not exceed 3/4 inch (19.1 mm) in height above the finished floor or landing for sliding doors serving *dwelling units* or 1/2 inch (12.7 mm) above the finished floor or landing for other doors. Raised thresholds and floor level changes greater than 1/4 inch (6.4 mm) at doorways shall be beveled with a slope not greater than one unit vertical in two units horizontal (50-percent slope).

Exceptions:

1. In occupancy Group R-2 or R-3, threshold heights for sliding and side-hinged exterior doors shall be permitted to be up to 7-3/4 inches (197 mm) in height if all of the following apply:
    1.1. The door is not part of the required *means of egress*.

1.2. The door is not part of an *accessible route* as required by Chapter 11.

1.3. The door is not part of an *Accessible unit*, *Type A unit* or *Type B unit*.

2. In *Type B units*, where Exception 5 to Section 1010.1.5 permits a 4-inch (102 mm) elevation change at the door, the threshold height on the exterior side of the door shall not exceed 4-3/4 inches (120 mm) in height above the exterior deck, patio or balcony for sliding doors or 4-1/2 inches (114 mm) above the exterior deck, patio or balcony for other doors.

1010.1.8 Door arrangement. Space between two doors in a series shall be 48 inches (1219 mm) minimum plus the width of a door swinging into the space. Doors in a series shall swing either in the same direction or away from the space between the doors.

Exceptions:

1. The minimum distance between horizontal sliding power-operated doors in a series shall be 48 inches (1219 mm).
2. Storm and screen doors serving individual *dwelling units* in Groups R-2 and R-3 need not be spaced 48 inches (1219 mm) from the other door.
3. Doors within individual *dwelling units* in Groups R-2 and R-3 other than within *Type A dwelling units*.

1010.1.9 Door operations. Except as specifically permitted by this section, egress doors shall be readily openable from the egress side without the use of a key or special knowledge or effort.

Note: Stairway doors shall also comply with Section 1010.1.9.11.

1010.1.9.1 Hardware. Door handles, pulls, latches, locks and other operating devices on doors required to be *accessible* by Chapter 11 shall not require tight grasping, tight pinching or twisting of the wrist to operate.

1010.1.9.2 Hardware height. Door handles, pulls, latches, locks and other operating devices shall be installed 34 inches (864 mm) minimum and 48 inches (1219 mm) maximum above the finished floor. Locks used only for security purposes and not used for normal operation are permitted at any height.

Exception: Access doors or gates in barrier walls and fences protecting pools, spas and hot tubs shall be permitted to have operable parts of the latch release on self-latching devices at 54 inches (1370 mm) maximum above the finished floor or ground, provided that the self-latching devices are not also self-locking devices operated by means of a key, electronic opener or integral combination lock.

1010.1.9.3 Monitored or recorded egress. Where electrical systems that monitor or record egress activity are incorporated, the locking system shall comply with Section 1010.1.9.7, 1010.1.9.8, 1010.1.9.9, 1010.1.9.10 or 1010.1.9.11 or shall be readily openable from the egress side without the use of a key or special knowledge or effort.

[W][S] 1010.1.9.4 Locks and latches. Locks and latches shall be permitted to prevent operation of doors where any of the following exist:

1. Places of detention or restraint as *approved by the building official*.
2. In buildings in occupancy Group A having an *occupant load* of 300 or less, Groups B, F, M and S, and in *places of religious worship*, the main door or doors are permitted to be equipped with key-operated locking devices from the egress side provided:

   2.1. The locking device is readily distinguishable as locked.

   2.2. A readily visible durable sign is posted on the egress side on or adjacent to the door stating: THIS DOOR TO REMAIN UNLOCKED ((~~WHEN THIS SPACE IS OCCUPIED~~)) DURING BUSINESS HOURS. The sign shall be in letters 1 inch (25 mm) high on a contrasting background.

   2.3. The use of the key-operated locking device is revocable by the *building official* for due cause.
3. Where egress doors are used in pairs, *approved* automatic flush bolts shall be permitted to be used, provided that the door leaf having the automatic flush bolts does not have a doorknob or surface-mounted hardware on the egress side of the door.
4. Doors from individual *dwelling* or *sleeping units* of Group R occupancies having an *occupant load* of 10 or less are permitted to be equipped with a night latch, dead bolt or security chain, provided such devices are openable from the inside without the use of a key or tool.
5. *Fire doors* after the minimum elevated temperature has disabled the unlatching mechanism in accordance with *listed fire door* test procedures.
6. Doors serving roofs not intended to be occupied shall be permitted to be locked preventing entry to the building from the roof.

DRAFT

7. *Approved*, listed locks without delayed egress shall be permitted in Group I-1 condition 2 assisted living facilities licensed by the state of Washington, provided that:
   7.1. The clinical needs of one or more patients require specialized security measures for their safety.
   7.2. The doors unlock upon actuation of the *automatic sprinkler system* or automatic *fire detection system.*
   7.3. The doors unlock upon loss of electrical power controlling the lock or lock mechanism.
   7.4. The lock shall be capable of being deactivated by a signal from a switch located in an *approved* location.
   7.5. There is a system, such as a keypad and code, in place that allows visitors, staff persons and appropriate residents to exit. Instructions for exiting shall be posted within six feet of the door.
8. Other than egress courts, where occupants must egress from an exterior space through the building for means of egress, exit access doors shall be permitted to be equipped with an approved locking device where installed and operated in accordance with all of the following:
   8.1. The occupant load of the occupied exterior area shall not exceed 300 as determined by IBC Section 1004.
   8.2. The maximum occupant load shall be posted where required by Section 1004.9. Such sign shall be permanently affixed inside the building and shall be posted in a conspicuous space near all the exit access doorways.
   8.3. A weatherproof telephone or two-way communication system installed in accordance with Sections 1009.8.1 and 1009.8.2 shall be located adjacent to not less than one required exit access door on the exterior side.
   8.4. The egress door locking device is readily distinguishable as locked and shall be a key-operated locking device.
   8.5. A clear window or glazed door opening, not less than 5 square feet (0.46 m^2) sq. ft. in area, shall be provided at each exit access door to determine if there are occupants using the outdoor area.
   8.6. A readily visible durable sign shall be posted on the interior side on or adjacent to each locked required exit access door serving the exterior area stating: THIS DOOR TO REMAIN UNLOCKED WHEN THE OUTDOOR AREA IS OCCUPIED. The letters on the sign shall be not less than 1 inch high on a contrasting background.
9. Locking devices are permitted on doors to balconies, decks or other exterior spaces serving individual dwelling or sleeping units.
10. Locking devices are permitted on doors to balconies, decks or other exterior spaces of 250 square feet or less, serving a private office space.

[S] 1010.1.9.5 Bolt locks. Manually operated flush bolts or surface bolts are not permitted.

Exceptions:

1. On doors not required for egress in individual *dwelling units* or *sleeping units*.
2. Where a pair of doors serves a storage or equipment room, manually operated edge- or surface-mounted bolts or self-latching flush bolts are permitted on the inactive leaf.
3. Where a pair of doors serves an *occupant load* of less than 50 persons in a Group B, F or S occupancy, manually operated edge- or surface-mounted bolts are permitted on the inactive leaf. The inactive leaf shall not contain doorknobs, panic bars or similar operating hardware.
4. Where a pair of doors serves a Group B, F or S occupancy, manually operated edge- or surface-mounted bolts are permitted on the inactive leaf provided that such inactive leaf is not needed to meet egress capacity requirements and the building is equipped throughout with an *automatic sprinkler system* in accordance with Section 903.3.1.1. The inactive leaf shall not contain doorknobs, panic bars or similar operating hardware.
5. Where a pair of doors serves patient care rooms in Group I-2 occupancies, self-latching edge- or surface-mounted bolts are permitted on the inactive leaf provided that the inactive leaf is not needed to meet egress capacity requirements and the inactive leaf shall not contain doorknobs, panic bars or similar operating hardware.

1010.1.9.6 Unlatching. The unlatching of any door or leaf shall not require more than one operation.

Exceptions:

1. Places of detention or restraint.
2. Where manually operated bolt locks are permitted by Section 1010.1.9.5.
3. Doors with automatic flush bolts as permitted by Section 1010.1.9.4, Item 3.

DRAFT

4. Doors from individual *dwelling units* and *sleeping units* of Group R occupancies as permitted by Section 1010.1.9.4, Item 4.

1010.1.9.6.1 Closet doors. Closet doors that latch in the closed position shall be openable from inside the closet.

[W] 1010.1.9.7 Controlled egress doors in Groups I-1 and I-2. Electric locking systems, including electro-mechanical locking systems and electromagnetic locking systems, shall be permitted to be locked in the means of egress in Group I-1 or I-2 occupancies where the clinical needs of persons receiving care require their containment. Controlled egress doors shall be permitted in such occupancies where the building is equipped throughout with an *automatic sprinkler system* in accordance with Section 903.3.1.1 or an *approved automatic smoke* or *heat detection system* installed in accordance with Section 907, provided that the doors are installed and operate in accordance with all of the following:

1. The door locks shall unlock on actuation of the *automatic sprinkler system* or *automatic fire detection system*.
2. The door locks shall unlock on loss of power controlling the lock or lock mechanism.
3. The door locking system shall be installed to have the capability of being unlocked by a switch located at the *fire command center*, a nursing station or other approved location. The switch shall directly break power to the lock.
4. A building occupant shall not be required to pass through more than one door equipped with a controlled egress locking system before entering an exit.
5. The procedures for unlocking the doors shall be described and approved as part of the emergency planning and preparedness required by Chapter 4 of the *International Fire Code*.

((~~6. All clinical staff shall have the keys, codes or other means necessary to operate the locking systems.~~))

6. There is a system, such as a keypad and code, in place that allows visitors, staff persons and appropriate residents to exit. Instructions for exiting shall be posted within six feet of the door.
7. Emergency lighting shall be provided at the door.
8. The door locking system units shall be *listed* in accordance with UL 294.

Exceptions:

1. Items 1 through 4 and 6 shall not apply to doors to areas occupied by persons who, because of clinical needs, require restraint or containment as part of the function of a psychiatric treatment area provided that all clinical staff shall have the keys, codes or other means necessary to operate the locking devices.
2. Items 1 through 4 shall not apply to doors to areas where a *listed* egress control system is utilized to reduce the risk of child abduction from nursery and obstetric areas of a Group I-2 hospital.

[S] 1010.1.9.8 Delayed egress. Delayed egress locking systems shall be permitted to be installed on doors serving the following occupancies in buildings that are equipped throughout with an *automatic sprinkler system* in accordance with Section 903.3.1.1 or an *approved automatic smoke* or *heat detection system* installed in accordance with Section 907. Delayed egress locks are permitted in libraries in both Group A and E occupancies in locations other than at main exit doors, and in Group E day care occupancies.

1. Group B, F, I, M, R, S and U occupancies.
2. Group E classrooms with an occupant load of less than 50.

Exception: Delayed egress locking systems shall be permitted to be installed on *exit* or *exit access* doors, other than the main *exit* or *exit access* door, serving a courtroom in buildings equipped throughout with an *automatic sprinkler system* in accordance with Section 903.3.1.1.

1010.1.9.8.1 Delayed egress locking system. The delayed egress locking system shall be installed and operated in accordance with all of the following:

1. The delay electronics of the delayed egress locking system shall deactivate upon actuation of the *automatic sprinkler system* or *automatic fire detection system*, allowing immediate free egress.
2. The delay electronics of the delayed egress locking system shall deactivate upon loss of power controlling the lock or lock mechanism, allowing immediate free egress.
3. The delayed egress locking system shall have the capability of being deactivated at the f*ire command center* and other *approved* locations.
4. An attempt to egress shall initiate an irreversible process that shall allow such egress in not more than 15 seconds when a physical effort to exit is applied to the egress side door hardware for not more than 3 seconds. Initiation of the irreversible process shall activate an audible signal in the vicinity of the door. Once the delay electronics have been deactivated, rearming the delay electronics shall be by manual means only.

   Exception: Where approved, a delay of not more than 30 seconds is permitted on a delayed egress door.

DRAFT

5. The egress path from any point shall not pass through more than one delayed egress locking system.

   Exceptions:

   1. In Group I-2 or I-3 occupancies, the egress path from any point in the building shall pass through not more than two delayed egress locking systems provided that the combined delay does not exceed 30 seconds.
   2. In Group I-1 or I-4 occupancies, the egress path from any point in the building shall pass through not more than two delayed egress locking systems provided the combined delay does not exceed 30 seconds and the building is equipped throughout with an *automatic sprinkler system* in accordance with Section 903.3.1.1.

6. A sign shall be provided on the door and shall be located above and within 12 inches (305 mm) of the door exit hardware:

   6.1. For doors that swing in the direction of egress, the sign shall read: PUSH UNTIL ALARM SOUNDS. DOOR CAN BE OPENED IN 15 [30] SECONDS.

   6.2. For doors that swing in the opposite direction of egress, the sign shall read: PULL UNTIL ALARM SOUNDS. DOOR CAN BE OPENED IN 15 [30] SECONDS.

   6.3. The sign shall comply with the visual character requirements in ICC A117.1.

   Exception: Where approved, in Group I occupancies, the installation of a sign is not required where care recipients who because of clinical needs require restraint or containment as part of the function of the treatment area.

7. Emergency lighting shall be provided on the egress side of the door.
8. The delayed egress locking system units shall be *listed* in accordance with UL 294.

1010.1.9.9 Sensor release of electrically locked egress doors. Sensor release of electric locking systems shall be permitted on doors located in the *means of egress* in any occupancy except Group H where installed and operated in accordance with all of the following criteria:

1. The sensor shall be installed on the egress side, arranged to detect an occupant approaching the doors, and shall cause the electric locking system to unlock.
2. The electric locks shall be arranged to unlock by a signal from or loss of power to the sensor.
3. Loss of power to the lock or locking system shall automatically unlock the electric locks.
4. The doors shall be arranged to unlock from a manual unlocking device located 40 inches to 48 inches (1016 mm to 1219 mm) vertically above the floor and within 5 feet (1524 mm) of the secured doors. Ready access shall be provided to the manual unlocking device and the device shall be clearly identified by a sign that reads "PUSH TO EXIT." When operated, the manual unlocking device shall result in direct interruption of power to the electric lock—independent of other electronics—and the electric lock shall remain unlocked for not less than 30 seconds.
5. Activation of the building *fire alarm system*, where provided, shall automatically unlock the electric lock, and the electric lock shall remain unlocked until the fire alarm system has been reset.
6. Activation of the building *automatic sprinkler system* or *fire detection system*, where provided, shall automatically unlock the electric lock. The electric lock shall remain unlocked until the *fire alarm system* has been reset.
7. The door locking system units shall be *listed* in accordance with UL 294.

[S] 1010.1.9.10 Door hardware release of electrically locked egress doors. Door hardware release of electric locking systems shall be permitted on doors in the *means of egress* in any occupancy except Group H where installed and operated in accordance with all of the following:

1. The door hardware ((~~that~~)) is affixed to the door leaf <u>and</u> has an obvious method of operation that is readily operated under all lighting conditions.
2. The door hardware is capable of being operated with one hand <u>without special knowledge, keys or tools,</u> and shall comply with Section 1010.1.9.6.
3. Operation of the door hardware directly interrupts the power to the electric lock and unlocks the door immediately.
4. Loss of power to the electric locking system automatically unlocks the door.
5. Where *panic* or *fire exit hardware* is required by Section 1010.1.10, operation of the *panic* or *fire exit hardware* also releases the electric lock.
6. The locking system units shall be *listed* in accordance with UL 294.

DRAFT

1010.1.9.11 Locking arrangements in buildings within correctional facilities. In *buildings* within correctional and detention facilities, doors in *means of egress* serving rooms or spaces occupied by persons whose movements are controlled for security reasons shall be permitted to be locked where equipped with egress control devices that shall unlock manually and by not less than one of the following means:

1. Activation of an *automatic sprinkler system* installed in accordance with Section 903.3.1.1.
2. Activation of an *approved manual fire alarm box*.
3. A signal from a *constantly attended location*.

[S] 1010.1.9.12 Stairway doors. Interior *stairway means of egress* doors shall be openable from both sides without the use of a key or special knowledge or effort.

Exceptions:

1. *Stairway* discharge doors shall be openable from the egress side and shall only be locked from the opposite side.
2. This section shall not apply to doors arranged in accordance with Section 403.5.3.
3. S*tairway* exit doors are permitted to be locked from the side opposite the egress side, provided that they are openable from the egress side and capable of being unlocked simultaneously without unlatching upon a signal from the *fire command center*, if present, or a signal by emergency personnel from a single location inside the main entrance to the building.
4. *Stairway exit* doors shall be openable from the egress side and shall only be locked from the opposite side in Group B, F, M and S occupancies where the only interior access to the tenant space is from a single *exit stairway* where permitted in Section 1006.3.3.
5. *Stairway exit* doors shall be openable from the egress side and shall only be locked from the opposite side in Group R-2 occupancies where the only interior access to the *dwelling unit* is from a single *exit stairway* where permitted in Section 1006.3.3.
6. In stairways serving more than four *stories* in non-high-rise buildings, doors are permitted to be locked from the side opposite the egress side, provided they are openable from the egress side and capable of being unlocked simultaneously without unlatching upon a signal from the fire command center, if present, or a signal by emergency personnel from a single location inside the main entrance to the building. A communication system that complies with Section 403.5.3.1 shall be provided.

[W] 1010.1.10 Panic and fire exit hardware. Swinging doors serving a Group H occupancy and swinging doors serving rooms or spaces with an *occupant load* of 50 or more in a Group A or E occupancy shall not be provided with a latch or lock other than *panic hardware* or *fire exit hardware*.

Exceptions:

1. A main *exit* of a Group A occupancy shall be permitted to have locking devices in accordance with Section 1010.1.9.4, Item 2.
2. Doors provided with *panic hardware* or *fire exit hardware* and serving a Group A or E occupancy shall be permitted to be electrically locked in accordance with Section 1010.1.9.9 or 1010.1.9.10.
3. Exit access doors serving occupied exterior areas shall be permitted to be locked in accordance with Section 1010.1.9.4, Item 7.

Electrical rooms with equipment rated 1,200 amperes or more and over 6 feet (1829 mm) wide, and that contain overcurrent devices, switching devices or control devices with *exit* or *exit access doors*, shall be equipped with *panic hardware* or *fire exit hardware*. The doors shall swing in the direction of egress travel.

1010.1.10.1 Installation. Where *panic* or *fire exit hardware* is installed, it shall comply with the following:

1. *Panic hardware* shall be *listed* in accordance with UL 305.
2. *Fire exit hardware* shall be *listed* in accordance with UL 10C and UL 305.
3. The actuating portion of the releasing device shall extend not less than one-half of the door leaf width.
4. The maximum unlatching force shall not exceed 15 pounds (67 N).

1010.1.10.2 Balanced doors. If *balanced doors* are used and *panic hardware* is required, the *panic hardware* shall be the push-pad type and the pad shall not extend more than one-half the width of the door measured from the latch side.

1010.2 Gates. Gates serving the *means of egress* system shall comply with the requirements of this section. Gates used as a component in a *means of egress* shall conform to the applicable requirements for doors.

Exception: Horizontal sliding or swinging gates exceeding the 4-foot (1219 mm) maximum leaf width limitation are permitted in fences and walls surrounding a stadium.

DRAFT

Exception: Within rooms or spaces used for assembly purposes, stepped aisles shall comply with Section 1029.

[S] 1011.2 Width and capacity. The required capacity of *stairways* shall be determined as specified in Section 1005.1, but the minimum width shall be not less than 44 inches (1118 mm). See Section 1009.3 for accessible *means of egress stairways*.

Exceptions:

1. *Stairways* serving an *occupant load* of less than 50 shall have a width of not less than 36 inches (914 mm).
2. *Spiral stairways* as provided for in Section 1011.10.
3. Where an incline platform lift or stairway chairlift is installed on *stairways* serving occupancies in Group R-3, or within *dwelling units* in occupancies in Group R-2, a clear passage width not less than 20 inches (508 mm) shall be provided. Where the seat and platform can be folded when not in use, the distance shall be measured from the folded position.
4. Stairways that are designed exclusively for circulation.

1011.3 Headroom. *Stairways* shall have a headroom clearance of not less than 80 inches (2032 mm) measured vertically from a line connecting the edge of the *nosings*. Such headroom shall be continuous above the *stairway* to the point where the line intersects the landing below, one tread depth beyond the bottom riser. The minimum clearance shall be maintained the full width of the *stairway* and landing.

Exceptions:

1. *Spiral stairways* complying with Section 1011.10 are permitted a 78-inch (1981 mm) headroom clearance.
2. In Group R-3 occupancies; within *dwelling units* in Group R-2 occupancies; and in Group U occupancies that are accessory to a Group R-3 occupancy or accessory to individual *dwelling units* in Group R-2 occupancies; where the *nosings* of treads at the side of a *flight* extend under the edge of a floor opening through which the *stair* passes, the floor opening shall be allowed to project horizontally into the required headroom not more than 4-3/4 inches (121 mm).

1011.4 Walkline. The walkline across *winder* treads shall be concentric to the direction of travel through the turn and located 12 inches (305 mm) from the side where the *winders* are narrower. The 12-inch (305 mm) dimension shall be measured from the widest point of the clear *stair* width at the walking surface of the *winder*. Where *winders* are adjacent within the *flight*, the point of the widest clear *stair* width of the adjacent *winders* shall be used.

[S] 1011.5 Stair treads and risers. *Stair* treads and risers shall comply with Sections 1011.5.1 through 1011.5.5.3.

1011.5.1 Dimension reference surfaces. For the purpose of this section, all dimensions are exclusive of carpets, rugs or runners.

1011.5.2 Riser height and tread depth. *Stair* riser heights shall be 7 inches (178 mm) maximum and 4 inches (102 mm) minimum. The riser height shall be measured vertically between the *nosings* of adjacent treads. Rectangular tread depths shall be 11 inches (279 mm) minimum measured horizontally between the vertical planes of the foremost projection of adjacent treads and at a right angle to the tread's *nosing*. *Winder* treads shall have a minimum tread depth of 11 inches (279 mm) between the vertical planes of the foremost projection of adjacent treads at the intersections with the walkline and a minimum tread depth of 10 inches (254 mm) within the clear width of the *stair*.

Exceptions:

1. *Spiral stairways* in accordance with Section 1011.10.
2. *Stairways* connecting stepped *aisles* to cross *aisles* or concourses shall be permitted to use the riser/tread dimension in Section 1029.14.2.
3. In Group R-3 occupancies; within *dwelling units* in Group R-2 occupancies; and in Group U occupancies that are accessory to a Group R-3 occupancy or accessory to individual *dwelling units* in Group R-2 occupancies; the maximum riser height shall be 7-3/4 inches (197 mm); the minimum tread depth shall be 10 inches (254 mm); the minimum *winder* tread depth at the walkline shall be 10 inches (254 mm); and the minimum *winder* tread depth shall be 6 inches (152 mm). A *nosing* projection not less than 3/4 inch (19.1 mm) but not more than 1-1/4 inches (32 mm) shall be provided on *stairways* with solid risers where the tread depth is less than 11 inches (279 mm).
4. See ((~~Section 503.1 of~~)) the *International Existing Building Code* for the replacement of existing *stairways*.
5. In Group I-3 facilities, *stairways* providing access to guard towers, observation stations and control rooms, not more than 250 square feet (23 m^2) in area, shall be permitted to have a maximum riser height of 8 inches (203 mm) and a minimum tread depth of 9 inches (229 mm).

1011.5.3 Winder treads. *Winder* treads are not permitted in *means of egress stairways* except within a *dwelling unit*.

Exceptions:

1. Curved *stairways* in accordance with Section 1011.9.
2. *Spiral stairways* in accordance with Section 1011.10.

DRAFT

[S] 1011.5.4 Dimensional uniformity. *Stair* treads and risers shall be of uniform size and shape. The tolerance between the largest and smallest riser height or between the largest and smallest tread depth shall not exceed 3/8 inch (9.5 mm) in any *flight* of *stairs*. The greatest *winder* tread depth at the walkline within any *flight* of *stairs* shall not exceed the smallest by more than 3/8 inch (9.5 mm).

Exceptions:

1. *Stairways* connecting stepped *aisles* to cross *aisles* or concourses shall be permitted to comply with the dimensional nonuniformity in Section 1029.14.2.
2. Consistently shaped *winders*, complying with Section 1011.5, differing from rectangular treads in the same *flight* of *stairs*.
3. Nonuniform riser dimension complying with Section 1011.5.4.1.

1011.5.4.1 Nonuniform height risers. Where the bottom or top riser adjoins a sloping *public way*, walkway or driveway having an established grade and serving as a landing, the bottom or top riser is permitted to be reduced along the slope. ((~~to less than 4 inches (102 mm) in height, with the variation in height of the bottom or top riser not to exceed one unit vertical in 12 units horizontal (8-percent slope) of *stair* width. The *nosings* or leading edges of treads at such nonuniform height risers shall have a distinctive marking stripe, different from any other *nosing* marking provided on the *stair flight*. The distinctive marking stripe shall be visible in descent of the *stair* and shall have a slip-resistant surface. Marking stripes shall have a width of not less than 1 inch (25 mm) but not more than 2 inches (51 mm).~~))

1011.5.5 Nosing and riser profile. *Nosings* shall have a curvature or bevel of not less than 1/16 inch (1.6 mm) but not more than 9/16 inch (14.3 mm) from the foremost projection of the tread. Risers shall be solid and vertical or sloped under the tread above from the underside of the *nosing* above at an angle not more than 30 degrees (0.52 rad) from the vertical.

1011.5.5.1 Nosing projection size. The leading edge (*nosings*) of treads shall project not more than 1-1/4 inches (32 mm) beyond the tread below.

1011.5.5.2 Nosing projection uniformity. *Nosing* projections of the leading edges shall be of uniform size, including the projections of the *nosing's* leading edge of the floor at the top of a *flight*.

1011.5.5.3 Solid risers. Risers shall be solid.

Exceptions:

1. Solid risers are not required for *stairways* that are not required to comply with Section 1009.3, provided that the opening between treads does not permit the passage of a sphere with a diameter of 4 inches (102 mm).
2. Solid risers are not required for occupancies in Group I-3 or in Group F, H and S occupancies other than areas accessible to the public. The size of the opening in the riser is not restricted.
3. Solid risers are not required for *spiral stairways* constructed in accordance with Section 1011.10.

1011.6 Stairway landings. There shall be a floor or landing at the top and bottom of each *stairway*. The width of landings, measured perpendicularly to the direction of travel, shall be not less than the width of *stairways* served. Every landing shall have a minimum depth, measured parallel to the direction of travel, equal to the width of the *stairway* or 48 inches (1219 mm), whichever is less. Doors opening onto a landing shall not reduce the landing to less than one-half the required width. When fully open, the door shall not project more than 7 inches (178 mm) into a landing. Where *wheelchair spaces* are required on the *stairway* landing in accordance with Section 1009.6.3, the *wheelchair space* shall not be located in the required width of the landing and doors shall not swing over the *wheelchair spaces*.

Exception: Where *stairways* connect stepped *aisles* to cross *aisles* or concourses, *stairway* landings are not required at the transition between *stairways* and stepped *aisles* constructed in accordance with Section 1029.

[W] 1011.7 Stairway construction. *Stairways* shall be built of materials consistent with the types permitted for the type of construction of the building. ((~~, except that wood *handrails* shall be permitted for all types of construction.~~))

EXCEPTIONS:

1. Wood handrails shall be permitted in all types of construction.
2. Interior exit stairway in accordance with Section 510.2.

1011.7.1 Stairway walking surface. The walking surface of treads and landings of a *stairway* shall not be sloped steeper than one unit vertical in 48 units horizontal (2-percent slope) in any direction. *Stairway* treads and landings shall have a solid surface. Finish floor surfaces shall be securely attached.

Exceptions:

1. Openings in *stair* walking surfaces shall be a size that does not permit the passage of 1/2-inch-diameter (12.7 mm) sphere. Elongated openings shall be placed so that the long dimension is perpendicular to the direction of travel.

DRAFT

2. In Group F, H and S occupancies, other than areas of parking structures accessible to the public, openings in treads and landings shall not be prohibited provided that a sphere with a diameter of 1-1/8 inches (29 mm) cannot pass through the opening.

1011.7.2 Outdoor conditions. Outdoor *stairways* and outdoor approaches to *stairways* shall be designed so that water will not accumulate on walking surfaces.

1011.7.3 Enclosures under interior stairways. The walls and soffits within enclosed usable spaces under enclosed and unenclosed stairways shall be protected by 1-hour fire-resistance-rated construction or the fire-resistance rating of the stairway enclosure, whichever is greater. Access to the enclosed space shall not be directly from within the stairway enclosure.

Exception: Spaces under *stairways* serving and contained within a single residential dwelling unit in Group R-2 or R-3 shall be permitted to be protected on the enclosed side with 1/2-inch (12.7 mm) gypsum board.

1011.7.4 Enclosures under exterior stairways. There shall not be enclosed usable space under *exterior exit stairways* unless the space is completely enclosed in 1-hour fire-resistance-rated construction. The open space under *exterior stairways* shall not be used for any purpose.

[S] 1011.8 Vertical rise. A flight of stairs shall not have a vertical rise greater than 12 feet (3658 mm) between floor levels or landings.

Exceptions:

1. Spiral stairways used as a means of egress from technical production areas.
2. Stairways that are designed exclusively for circulation.

1011.9 Curved stairways. Curved stairways with winder treads shall have treads and risers in accordance with Section 1011.5 and the smallest radius shall be not less than twice the minimum width or required capacity of the stairway.

Exception: The radius restriction shall not apply to curved stairways in Group R-3 and within individual dwelling units in Group R-2.

[S] 1011.10 Spiral stairways. *Spiral stairways* are permitted to be used as a component in the *means of egress* only within *dwelling units* or from a space not more than 250 square feet (23 m^2) in area and serving not more than five occupants, ((~~or~~)) from *technical production areas* in accordance with Section 410.5 or as approved by the building official.

1. A *spiral stairway* shall have a 6-3/4-inch (171 mm) minimum clear tread depth at a point 12 inches (305 mm) from the narrow edge. The risers shall be sufficient to provide a headroom of 78 inches (1981 mm) minimum, but riser height shall not be more than 9-1/2 inches (241 mm). The minimum *stairway* clear width at and below the *handrail* shall be 26 inches (660 mm).
2. Spiral stairways are permitted to be used exclusively for circulation, provided:
   - 2.1. The spiral stairway connects any combination of the following: Group B occupancy, Group R occupancy, or Group A occupancies that are accessory to a Group R occupancy;
   - 2.2. It can be demonstrated that the occupants are unlikely to access the spiral stairway in an emergency;
   - 2.3. The required *means of egress* is clear and readily visible to occupants; and
   - 2.4. A placard is installed at the spiral stairway warning occupants that the spiral stairway is "NOT AN EXIT" in accordance with 1013.7.

1011.11 Handrails. *Flights of stairways* shall have *handrails* on each side and shall comply with Section 1014. Where glass is used to provide the *handrail*, the *handrail* shall comply with Section 2407.

Exceptions:

1. *Flights of stairways* within dwelling units and *flights of spiral stairways* are permitted to have a *handrail* on one side only.
2. Decks, patios and walkways that have a single change in elevation where the landing depth on each side of the change of elevation is greater than what is required for a landing do not require *handrails*.
3. In Group R-3 occupancies, a change in elevation consisting of a single riser at an entrance or egress door does not require *handrails*.
4. Changes in room elevations of three or fewer risers within dwelling units and sleeping units in Group R-2 and R-3 do not require *handrails*.

[S] 1011.12 Stairway to roof. In buildings four or more stories above *grade plane*, one *stairway* shall extend to the roof surface unless the roof has a slope steeper than four units vertical in 12 units horizontal (33-percent slope).

DRAFT

Exceptions:

1. Other than where required by Section 1011.12.1, in buildings without an occupied roof, access to the roof from the top story shall be permitted to be by an *alternating tread device* ((,)) or a ship's ladder. ((~~or a permanent ladder.~~))
2. Access to the roof is not required in Group R-3 occupancies.

1011.12.1 Stairway to elevator equipment. Roofs and penthouses containing elevator equipment that must be accessed for maintenance are required to be accessed by a stairway.

1011.12.2 Roof access. Where a stairway is provided to a roof, access to the roof shall be provided through a penthouse complying with Section 1510.2.

Exception: In buildings without an occupied roof, access to the roof shall be permitted to be a roof hatch or trap door not less than 16 square feet (1.5 m^2) in area and having a minimum dimension of 2 feet 6 inches (((~~610~~)) 762 mm).

1011.13 Guards. Guards shall be provided along stairways and landings where required by Section 1015 and shall be constructed in accordance with Section 1015. Where the roof hatch opening providing the required access is located within 10 feet (3049 mm) of the roof edge, such roof access or roof edge shall be protected by guards installed in accordance with Section 1015.

1011.14 Alternating tread devices. *Alternating tread devices* are limited to an element of a *means of egress* in buildings of Groups F, H and S from a mezzanine not more than 250 square feet (23 m^2) in area and that serves not more than five occupants; in buildings of Group I-3 from a guard tower, observation station or control room not more than 250 square feet (23 m^2) in area and for access to unoccupied roofs. *Alternating tread devices* used as a means of egress shall not have a rise greater than 20 feet (6096 mm) between floor levels or landings.

1011.14.1 Handrails of alternating tread devices. Handrails shall be provided on both sides of alternating tread devices and shall comply with Section 1014.

1011.14.2 Treads of alternating tread devices. *Alternating tread devices* shall have a minimum tread depth of 5 inches (127 mm), a minimum projected tread depth of 8-1/2 inches (216 mm), a minimum tread width of 7 inches (178 mm) and a maximum riser height of 9-1/2 inches (241 mm). The tread depth shall be measured horizontally between the vertical planes of the foremost projections of adjacent treads. The riser height shall be measured vertically between the leading edges of adjacent treads. The riser height and tread depth provided shall result in an angle of ascent from the horizontal of between 50 and 70 degrees (0.87 and 1.22 rad). The initial tread of the device shall begin at the same elevation as the platform, landing or floor surface.

Exception: *Alternating tread devices* used as an element of a *means of egress* in buildings from a mezzanine area not more than 250 square feet (23 m^2) in area that serves not more than five occupants shall have a minimum tread depth of 3 inches (76 mm) with a minimum projected tread depth of 10-1/2 inches (267 mm). The rise to the next alternating tread surface shall not exceed 8 inches (203 mm).

1011.15 Ship's ladders. Ship's ladders are permitted to be used in Group I-3 as a component of a *means of egress* to and from control rooms or elevated facility observation stations not more than 250 square feet (23 m^2) with not more than three occupants and for access to unoccupied roofs. The minimum clear width at and below the *handrails* shall be 20 inches (508 mm).

1011.15.1 Handrails of ship's ladders. *Handrails* shall be provided on both sides of ship's ladders.

1011.15.2 Treads of ship's ladders. Ship's ladders shall have a minimum tread depth of 5 inches (127 mm). The tread shall be projected such that the total of the tread depth plus the *nosing* projection is not less than 8-1/2 inches (216 mm). The maximum riser height shall be 9-1/2 inches (241 mm).

1011.16 Ladders. Permanent ladders shall not serve as a part of the *means of egress* from occupied spaces within a building. Permanent ladders shall be constructed in accordance with Section 306.5 of the *International Mechanical Code*. Permanent ladders shall be permitted to provide access to the following areas:

1. Spaces frequented only by personnel for maintenance, repair or monitoring of equipment.
2. Nonoccupiable spaces accessed only by catwalks, crawl spaces, freight elevators or very narrow passageways.
3. Raised areas used primarily for purposes of security, life safety or fire safety including, but not limited to, observation galleries, prison guard towers, fire towers or lifeguard stands.
4. Elevated levels in Group U not open to the general public.
5. Nonoccupied roofs that are not required to have *stairway* access in accordance with Section 1011.12.1.
6. Where permitted to access equipment and appliances in accordance with Section 306.5 of the *International Mechanical Code*.

[W] 1011.17 Stairways in individual dwelling units. Stairs or ladders within individual *dwelling units* used for access to areas of 200 square feet (18.6 m^2) or less which do not contain the primary bathroom or kitchen are exempt from the requirements of Section 1011.

DRAFT

SECTION 1012
RAMPS

[S] 1012.1 Scope. The provisions of this section shall apply to ramps used as a component of a *means of egress.*

Exceptions:

1. Ramped *aisles* within assembly rooms or spaces shall comply with the provisions in Section 1029.
2. Curb ramps shall comply with ICC A117.1.
3. Vehicle ramps in parking garages for pedestrian *exit access* shall not be required to comply with Sections 1012.3 through 1012.10 where they are not an *accessible route* serving *accessible* parking spaces, other required *accessible* elements or part of an accessible *means of egress*.
4. In a parking garage where one accessible *means of egress* serving accessible parking spaces or other accessible elements is provided, a second accessible *means of egress* serving that area shall be permitted to include a vehicle ramp that does not comply with Sections 1012.4, 1012.5 and 1012.8. A landing complying with Sections 1012.6.1 and 1012.6.4 shall be provided at any change of direction in the accessible *means of egress.*

1012.2 Slope. *Ramps* used as part of a *means of egress* shall have a running slope not steeper than one unit vertical in 12 units horizontal (8-percent slope). The slope of other pedestrian *ramps* shall not be steeper than one unit vertical in eight units horizontal (12.5-percent slope).

1012.3 Cross slope. The slope measured perpendicular to the direction of travel of a *ramp* shall not be steeper than one unit vertical in 48 units horizontal (2-percent slope).

1012.4 Vertical rise. The rise for any *ramp* run shall be 30 inches (762 mm) maximum.

1012.5 Minimum dimensions. The minimum dimensions of *means of egress ramps* shall comply with Sections 1012.5.1 through 1012.5.3.

1012.5.1 Width and capacity. The minimum width and required capacity of a *means of egress ramp* shall be not less than that required for *corridors* by Section 1020.2. The clear width of a *ramp* between *handrails*, if provided, or other permissible projections shall be 36 inches (914 mm) minimum.

1012.5.2 Headroom. The minimum headroom in all parts of the *means of egress ramp* shall be not less than 80 inches (2032 mm) above the finished floor of the ramp run and any intermediate landings. The minimum clearance shall be maintained for the full width of the *ramp* and landing.

1012.5.3 Restrictions. *Means of egress ramps* shall not reduce in width in the direction of egress travel. Projections into the required *ramp* and landing width are prohibited. Doors opening onto a landing shall not reduce the clear width to less than 42 inches (1067 mm).

1012.6 Landings. *Ramps* shall have landings at the bottom and top of each *ramp*, points of turning, entrance, exits and at doors. Landings shall comply with Sections 1012.6.1 through 1012.6.5.

1012.6.1 Slope. Landings shall have a slope not steeper than one unit vertical in 48 units horizontal (2-percent slope) in any direction. Changes in level are not permitted.

1012.6.2 Width. The landing width shall be not less than the width of the widest *ramp* run adjoining the landing.

1012.6.3 Length. The landing length shall be 60 inches (1525 mm) minimum.

Exceptions:

1. In Group R-2 and R-3 individual *dwelling* and *sleeping units* that are not required to be *Accessible units*, *Type A units* or *Type B units* in accordance with Section 1107, landings are permitted to be 36 inches (914 mm) minimum.
2. Where the *ramp* is not a part of an *accessible route*, the length of the landing shall not be required to be more than 48 inches (1220 mm) in the direction of travel.

1012.6.4 Change in direction. Where changes in direction of travel occur at landings provided between *ramp* runs, the landing shall be 60 inches by 60 inches (1524 mm by 1524 mm) minimum.

Exception: In Group R-2 and R-3 individual *dwelling* or *sleeping units* that are not required to be *Accessible units*, *Type A units* or *Type B units* in accordance with Section 1107, landings are permitted to be 36 inches by 36 inches (914 mm by 914 mm) minimum.

1012.6.5 Doorways. Where doorways are located adjacent to a *ramp* landing, maneuvering clearances required by *ICC A117.1* are permitted to overlap the required landing area.

1012.7 Ramp construction. *Ramps* shall be built of materials consistent with the types permitted for the type of construction of the building, except that wood *handrails* shall be permitted for all types of construction.

1012.7.1 Ramp surface. The surface of *ramps* shall be of slip-resistant materials that are securely attached.

DRAFT

1012.7.2 Outdoor conditions. Outdoor *ramps* and outdoor approaches to *ramps* shall be designed so that water will not accumulate on walking surfaces.

1012.8 Handrails. *Ramps* with a rise greater than 6 inches (152 mm) shall have *handrails* on both sides. *Handrails* shall comply with Section 1014.

1012.9 Guards. *Guards* shall be provided where required by Section 1015 and shall be constructed in accordance with Section 1015.

1012.10 Edge protection. Edge protection complying with Section 1012.10.1 or 1012.10.2 shall be provided on each side of *ramp* runs and at each side of *ramp* landings.

Exceptions:

1. Edge protection is not required on *ramps* that are not required to have *handrails*, provided they have flared sides that comply with the *ICC A117.1* curb ramp provisions.
2. Edge protection is not required on the sides of *ramp* landings serving an adjoining *ramp* run or *stairway*.
3. Edge protection is not required on the sides of *ramp* landings having a vertical dropoff of not more than 1/2 inch (12.7 mm) within 10 inches (254 mm) horizontally of the required landing area.

1012.10.1 Curb, rail, wall or barrier. A curb, rail, wall or barrier shall be provided to serve as edge protection. A curb shall be not less than 4 inches (102 mm) in height. Barriers shall be constructed so that the barrier prevents the passage of a 4-inch-diameter (102 mm) sphere, where any portion of the sphere is within 4 inches (102 mm) of the floor or ground surface.

1012.10.2 Extended floor or ground surface. The floor or ground surface of the *ramp* run or landing shall extend 12 inches (305 mm) minimum beyond the inside face of a *handrail* complying with Section 1014.

SECTION 1013
EXIT SIGNS

[S] 1013.1 Where required. *Exits* and *exit access* doors shall be marked by an *approved* exit sign readily visible from any direction of egress travel. The path of egress travel to *exits* and within *exits* shall be marked by readily visible exit signs to clearly indicate the direction of egress travel in cases where the *exit* or the path of egress travel is not immediately visible to the occupants. Intervening *means of egress* doors within *exits* shall be marked by exit signs. Exit sign placement shall be such that any point in an *exit access corridor* or *exit passageway* is within 100 feet (30 480 mm) or the *listed* viewing distance of the sign, whichever is less, from the nearest visible exit sign. Exit signs shall be located at any other location determined by the *building official* to be necessary to clearly indicate the direction of egress.

Exceptions:

1. Exit signs are not required in rooms or areas that require only one *exit* or *exit access* other than in buildings designed with a single exit stairway according to Section 1006.3.2 item 7.
2. Main exterior *exit* doors or gates that are obviously and clearly identifiable as *exits* need not have exit signs where *approved* by the *building official*.
3. Exit signs are not required in occupancies in Group U and individual *sleeping units* or *dwelling units* in Group R-1, R-2 or R-3.
4. Exit signs are not required in dayrooms, sleeping rooms or dormitories in occupancies in Group I-3.
5. In occupancies in Groups A-4 and A-5, exit signs are not required on the seating side of vomitories or openings into seating areas where exit signs are provided in the concourse that are readily apparent from the vomitories. Egress lighting is provided to identify each vomitory or opening within the seating area in an emergency.
6. Exit signs are not required on exterior stairways serving exterior exit balconies.

1013.2 Low-level exit signs in Group R-1. Where exit signs are required in Group R-1 occupancies by Section 1013.1, additional low-level exit signs shall be provided in all areas serving guest rooms in Group R-1 occupancies and shall comply with Section 1013.5.

The bottom of the sign shall be not less than 10 inches (254 mm) nor more than 18 inches (455 mm) above the floor level. The sign shall be flush mounted to the door or wall. Where mounted on the wall, the edge of the sign shall be within 4 inches (102 mm) of the door frame on the latch side.

1013.3 Illumination. Exit signs shall be internally or externally illuminated.

Exception: Tactile signs required by Section 1013.4 need not be provided with illumination.

DRAFT

1013.4 Raised character and braille exit signs. A sign stating EXIT in visual characters, raised characters and braille and complying with *ICC A117.1* shall be provided adjacent to each door to an *area of refuge*, providing direct access to a stairway, an exterior area for assisted rescue, an *exit stairway* or *ramp*, an *exit passageway* and the *exit discharge*.

1013.5 Internally illuminated exit signs. Electrically powered, *self-luminous* and *photoluminescent* exit signs shall be *listed* and *labeled* in accordance with UL 924 and shall be installed in accordance with the manufacturer's instructions and Chapter 27. Exit signs shall be illuminated at all times.

[S] 1013.6 Externally illuminated exit signs. Externally illuminated exit signs shall comply with Sections 1013.6.1 through 1013.6.3.

1013.6.1 Graphics. Every exit sign and directional exit sign shall have plainly legible letters not less than 6 inches (152 mm) high with the principal strokes of the letters not less than 3/4 inch (19.1 mm) wide. The word "EXIT" shall have letters having a width not less than 2 inches (51 mm) wide, except the letter "I," and the minimum spacing between letters shall be not less than 3/8 inch (9.5 mm). Signs larger than the minimum established in this section shall have letter widths, strokes and spacing in proportion to their height.

The word "EXIT" shall be in high contrast with the background and shall be clearly discernible when the means of exit sign illumination is or is not energized. If a chevron directional indicator is provided as part of the exit sign, the construction shall be such that the direction of the chevron directional indicator cannot be readily changed.

Exception: Existing exit signs with letters at least 5 inches (127 mm) in height are permitted to be reused.

1013.6.2 Exit sign illumination. The face of an exit sign illuminated from an external source shall have an intensity of not less than 5 footcandles (54 lux).

1013.6.3 Power source. Exit signs shall be illuminated at all times. To ensure continued illumination for a duration of not less than 90 minutes in case of primary power loss, the sign illumination means shall be connected to an emergency power system provided from storage batteries, unit equipment or an on-site generator. The installation of the emergency power system shall be in accordance with Chapter 27. Group I-2, Condition 2 exit sign illumination shall not be provided by unit equipment batteries only.

Exception: *Approved* exit sign illumination types that provide continuous illumination independent of external power sources for a duration of not less than 90 minutes, in case of primary power loss, are not required to be connected to an emergency electrical system.

[S] 1013.7 Not-an-exit warnings. Placards reading "NOT AN EXIT" shall be installed at all doorways, passageways or stairways which are not exits, exit accesses or exit discharges, and which may be mistaken for an exit. A sign indicating the use of the doorway, passageway or stairway, such as "TO BASEMENT," "STORE ROOM," "LINEN CLOSET," is permitted in lieu of the "NOT AN EXIT" sign.

DRAFT

SECTION 1014
HANDRAILS

1014.1 Where required. *Handrails* serving *flights of stairways*, *ramps*, stepped *aisles* and ramped *aisles* shall be adequate in strength and attachment in accordance with Section 1607.8. *Handrails* required for *flights of stairways* by Section 1011.11 shall comply with Sections 1014.2 through 1014.9. *Handrails* required for *ramps* by Section 1012.8 shall comply with Sections 1014.2 through 1014.8. *Handrails* for stepped *aisles* and ramped *aisles* required by Section 1029.16 shall comply with Sections 1014.2 through 1014.8.

1014.2 Height. *Handrail* height, measured above *stair* tread *nosings*, or finish surface of *ramp* slope, shall be uniform, not less than 34 inches (864 mm) and not more than 38 inches (965 mm). *Handrail* height of *alternating tread devices* and ship's ladders, measured above tread *nosings*, shall be uniform, not less than 30 inches (762 mm) and not more than 34 inches (864 mm).

Exceptions:

1. Where handrail fittings or bendings are used to provide continuous transition between *flights*, the fittings or bendings shall be permitted to exceed the maximum height.
2. In Group R-3 occupancies; within *dwelling units* in Group R-2 occupancies; and in Group U occupancies that are associated with a Group R-3 occupancy or associated with individual *dwelling units* in Group R-2 occupancies; where handrail fittings or bendings are used to provide continuous transition between *flights*, transition at *winder* treads, transition from *handrail* to *guard*, or where used at the start of a *flight*, the *handrail* height at the fittings or bendings shall be permitted to exceed the maximum height.
3. *Handrails* on top of a guard where permitted along stepped aisles and ramped aisles in accordance with Section 1029.16.

1014.3 Handrail graspability. Required *handrails* shall comply with Section 1014.3.1 or shall provide equivalent graspability.

Exceptions:

1. From a height of 36 inches (914 mm) to 42 inches (1067 mm), *guards* shall not have openings that allow passage of a sphere 4-3/8 inches (111 mm) in diameter.
2. The triangular openings at the open sides of a *stair*, formed by the riser, tread and bottom rail shall not allow passage of a sphere 6 inches (152 mm) in diameter.
3. At elevated walking surfaces for access to and use of electrical, mechanical or plumbing systems or equipment, *guards* shall not have openings that allow passage of a sphere 21 inches (533 mm) in diameter.
4. In areas that are not open to the public within occupancies in Group I-3, F, H or S, and for *alternating tread devices* and ship's ladders, *guards* shall not have openings that allow passage of a sphere 21 inches (533 mm) in diameter.
5. In assembly seating areas, *guards* required at the end of aisles in accordance with Section 1029.17.4 shall not have openings that allow passage of a sphere 4 inches (102 mm) in diameter up to a height of 26 inches (660 mm). From a height of 26 inches (660 mm) to 42 inches (1067 mm) above the adjacent walking surfaces, *guards* shall not have openings that allow passage of a sphere 8 inches (203 mm) in diameter.
6. Within individual *dwelling units* and *sleeping units* in Group R-2 and R-3 occupancies, *guards* on the open sides of *stairs* shall not have openings that allow passage of a sphere 4-3/8 (111 mm) inches in diameter.

1015.5 Screen porches. Porches and decks that are enclosed with insect screening shall be provided with *guards* where the walking surface is located more than 30 inches (762 mm) above the floor or grade below.

[S] 1015.6 ((~~Mechanical equipment~~)) Equipment, systems and devices. *Guards* shall be provided where various components that require service are located within 10 feet (3048 mm) of a roof edge or open side of a walking surface and such edge or open side is located more than 30 inches (762 mm) above the floor, roof or grade below. The *guard* shall extend not less than 30 inches (762 mm) beyond each end of such components. The *guard* shall be constructed so as to prevent the passage of a sphere 21 inches (533 mm) in diameter.

Exception: *Guards* are not required where personal fall arrest anchorage connector devices that comply with ANSI/ASSE Z 359.1 are installed.

1015.7 Roof access. *Guards* shall be provided where the roof hatch opening is located within 10 feet (3048 mm) of a roof edge or open side of a walking surface and such edge or open side is located more than 30 inches (762 mm) above the floor, roof or grade below. The *guard* shall be constructed so as to prevent the passage of a sphere 21 inches (533 mm) in diameter.

Exception: *Guards* are not required where personal fall arrest anchorage connector devices that comply with ANSI/ASSE Z 359.1 are installed.

1015.8 Window openings. Windows in Group R-2 and R-3 buildings including *dwelling units*, where the top of the sill of an operable window opening is located less than 36 inches above the finished floor and more than 72 inches (1829 mm) above the finished grade or other surface below on the exterior of the building, shall comply with one of the following:

1. Operable windows where the top of the sill of the opening is located more than 75 feet (22 860 mm) above the finished grade or other surface below and that are provided with window fall prevention devices that comply with ASTM F2006.
2. Operable windows where the openings will not allow a 4-inch-diameter (102 mm) sphere to pass through the opening when the window is in its largest opened position.
3. Operable windows where the openings are provided with window fall prevention devices that comply with ASTM F2090.
4. Operable windows that are provided with window opening control devices that comply with Section 1015.8.1.

1015.8.1 Window opening control devices. Window opening control devices shall comply with ASTM F2090. The window opening control device, after operation to release the control device allowing the window to fully open, shall not reduce the minimum net clear opening area of the window unit to less than the area required by Section 1030.2.

SECTION 1016
EXIT ACCESS

1016.1 General. The *exit access* shall comply with the applicable provisions of Sections 1003 through 1015. *Exit access* arrangement shall comply with Sections 1016 through 1021.

[S] 1016.2 Egress through intervening spaces. Egress through intervening spaces shall comply with this section.

1. *Exit access* through an enclosed elevator lobby is permitted. Access to not less than one of the required *exits* shall be provided without travel through the enclosed elevator lobbies required by Section ((~~3006~~)) 713.14. Where the path of exit access travel passes through an enclosed elevator lobby, the level of protection required for the enclosed elevator lobby is not required to be extended to the *exit* unless direct access to an *exit* is required by other sections of this code.

DRAFT

2. Egress from a room or space shall not pass through adjoining or intervening rooms or areas, except where such adjoining rooms or areas and the area served are accessory to one or the other, are not a Group H occupancy and provide a discernible path of egress travel to an *exit*.

   Exception: *Means of egress* are not prohibited through adjoining or intervening rooms or spaces in a Group H, S or F occupancy where the adjoining or intervening rooms or spaces are the same or a lesser hazard occupancy group.

3. An *exit access* shall not pass through a room that can be locked to prevent egress.
4. *Means of egress* from *dwelling units* or sleeping areas shall not lead through other sleeping areas, toilet rooms or bathrooms.
5. Egress shall not pass through kitchens, storage rooms, closets or spaces used for similar purposes.

   Exceptions:

   1. *Means of egress* are not prohibited through a kitchen area serving adjoining rooms constituting part of the same *dwelling unit* or *sleeping unit*.
   2. *Means of egress* are not prohibited through stockrooms in Group M occupancies where all of the following are met:

      2.1. The stock is of the same hazard classification as that found in the main retail area.

      2.2. Not more than 50 percent of the *exit access* is through the stockroom.

      2.3. The stockroom is not subject to locking from the egress side.

      2.4. There is a demarcated, minimum 44-inch-wide (1118 mm) *aisle* defined by full- or partial-height fixed walls or similar construction that will maintain the required width and lead directly from the retail area to the *exit* without obstructions.

6. Unless *approved* by the *building official*, where two or more exits are required, exit travel shall not pass through an interior exit stairway as the only way to reach another exit.

Note: See Section 1010.1.9.3 for conditions in which exit access doors from elevator lobbies are permitted to be locked.

1016.2.1 Multiple tenants. Where more than one tenant occupies any one floor of a building or structure, each tenant space, *dwelling unit* and *sleeping unit* shall be provided with access to the required *exits* without passing through adjacent tenant spaces, *dwelling units* and *sleeping units*.

Exception: The *means of egress* from a smaller tenant space shall not be prohibited from passing through a larger adjoining tenant space where such rooms or spaces of the smaller tenant occupy less than 10 percent of the area of the larger tenant space through which they pass; are the same or similar occupancy group; a discernible path of egress travel to an *exit* is provided; and the *means of egress* into the adjoining space is not subject to locking from the egress side. A required *means of egress* serving the larger tenant space shall not pass through the smaller tenant space or spaces.

DRAFT

SECTION 1017
EXIT ACCESS TRAVEL DISTANCE

1017.1 General. Travel distance within the *exit access* portion of the *means of egress* system shall be in accordance with this section.

Note: Additional interior exit stairways or corridors constructed as smoke barriers may be required for standpipe hose connections. See Section 905.4.

1017.2 Limitations. *Exit access* travel distance shall not exceed the values given in Table 1017.2.

[S] TABLE 1017.2
EXIT ACCESS TRAVEL DISTANCE[a]

OCCUPANCY	WITHOUT SPRINKLER SYSTEM (feet)	WITH SPRINKLER SYSTEM (feet)
A, E, F-1, M, R, S-1	200[e]	250[b]
I-1	Not Permitted	250[b]
B	200	300[c]
F-2, S-2, U	300	400[c]
H-1	Not Permitted	75[d]
H-2	Not Permitted	100[d]
H-3	Not Permitted	150[d]
H-4	Not Permitted	175[d]
H-5	Not Permitted	200[c]
I-2, I-3	Not Permitted	200[c]
I-4	150	200[c]

For SI: 1 foot = 304.8 mm.

a. See the following sections for modifications to exit access travel distance requirements:
Section 402.8: For the distance limitation in malls.
Section 404.9: For the distance limitation through an atrium space.
Section 407.4: For the distance limitation in Group I-2.
Sections 408.6.1 and 408.8.1: For the distance limitations in Group I-3.
Section 411.3: For the distance limitation in special amusement buildings.
Section 412.6: For the distance limitations in aircraft manufacturing facilities.
Section 1006.2.2.2: For the distance limitation in refrigeration machinery rooms.
Section 1006.2.2.3: For the distance limitation in refrigerated rooms and spaces.
Section 1006.3.3: For buildings with one exit.
Section 1017.2.2: For increased distance limitation in Groups F-1 and S-1.
Section 1029.7: For increased limitation in assembly seating.
((~~Section 3103.4: For temporary structures.~~))
Section 3104.9: For pedestrian walkways.

b. Buildings equipped throughout with an automatic sprinkler system in accordance with Section 903.3.1.1 or 903.3.1.2. See Section 903 for occupancies where automatic sprinkler systems are permitted in accordance with Section 903.3.1.2.

c. Buildings equipped throughout with an automatic sprinkler system in accordance with Section 903.3.1.1.

d. Group H occupancies equipped throughout with an automatic sprinkler system in accordance with Section 903.2.5.1.

e. Group R-3 and R-4 buildings equipped throughout with an automatic sprinkler system in accordance with Section 903.3.1.3. See Section 903.2.8 for occupancies where automatic sprinkler systems are permitted in accordance with Section 903.3.1.3.

DRAFT

1017.2.1 Exterior egress balcony increase. *Exit access* travel distances specified in Table 1017.2 shall be increased up to an additional 100 feet (30 480 mm) provided that the last portion of the *exit access* leading to the *exit* occurs on an exterior egress balcony constructed in accordance with Section 1021. The length of such balcony shall be not less than the amount of the increase taken.

1017.2.2 Groups F-1 and S-1 increase. The maximum *exit access* travel distance shall be 400 feet (122 m) in Group F-1 or S-1 occupancies where all of the following conditions are met:

1. The portion of the building classified as Group F-1 or S-1 is limited to one story in height.
2. The minimum height from the finished floor to the bottom of the ceiling or roof slab or deck is 24 feet (7315 mm).
3. The building is equipped throughout with an *automatic sprinkler system* in accordance with Section 903.3.1.1.

1017.3 Measurement. *Exit access* travel distance shall be measured from the most remote point of each room, area or space along the natural and unobstructed path of horizontal and vertical egress travel to the entrance to an *exit*.

Exception: In *open parking garages*, *exit access* travel distance is permitted to be measured to the closest riser of an *exit access stairway* or the closest slope of an *exit access ramp*.

1017.3.1 Exit access stairways and ramps. Travel distance on *exit access stairways* or *ramps* shall be included in the *exit access* travel distance measurement. The measurement along *stairways* shall be made on a plane parallel and tangent to the *stair* tread *nosings* in the center of the *stair* and landings. The measurement along *ramps* shall be made on the walking surface in the center of the *ramp* and landings.

SECTION 1018
AISLES

1018.1 General. *Aisles* and *aisle accessways* serving as a portion of the *exit access* in the *means of egress* system shall comply with the requirements of this section. *Aisles* or *aisle accessways* shall be provided from all occupied portions of the *exit access* that contain seats, tables, furnishings, displays and similar fixtures or equipment. The minimum width or required capacity of *aisles* shall be unobstructed.

Exception: Encroachments complying with Section 1005.7.

1018.2 Aisles in assembly spaces. *Aisles and aisle accessways* serving a room or space used for assembly purposes shall comply with Section 1029.

1018.3 Aisles in Groups B and M. In Group B and M occupancies, the minimum clear aisle width shall be determined by Section 1005.1 for the *occupant load* served, but shall be not less than that required for corridors by Section 1020.2.

Exception: Nonpublic *aisles* serving less than 50 people and not required to be *accessible* by Chapter 11 need not exceed 28 inches (711 mm) in width.

1018.4 Aisle accessways in Group M. An *aisle accessway* shall be provided on not less than one side of each element within the *merchandise pad*. The minimum clear width for an *aisle accessway* not required to be *accessible* shall be 30 inches (762 mm). The required clear width of the *aisle accessway* shall be measured perpendicular to the elements and merchandise within the *merchandise pad*. The 30-inch (762 mm) minimum clear width shall be maintained to provide a path to an adjacent *aisle* or *aisle accessway*. The *common path of egress travel* shall not exceed 30 feet (9144 mm) from any point in the *merchandise pad*.

Exception: For areas serving not more than 50 occupants, the *common path of egress travel* shall not exceed 75 feet (22 860 mm).

1018.5 Aisles in other than assembly spaces and Groups B and M. In other than rooms or spaces used for assembly purposes and Group B and M occupancies, the minimum clear *aisle* capacity shall be determined by Section 1005.1 for the occupant load served, but the width shall be not less than that required for corridors by Section 1020.2.

Exception: Nonpublic *aisles* serving less than 50 people and not required to be *accessible* by Chapter 11 need not exceed 28 inches (711 mm) in width.

DRAFT

SECTION 1019
EXIT ACCESS STAIRWAYS AND RAMPS

1019.1 General. *Exit access stairways* and *ramps* serving as an *exit access* component in a *means of egress* system shall comply with the requirements of this section. The number of stories connected by *exit access stairways* and *ramps* shall include *basements*, but not *mezzanines*.

1019.2 All occupancies. *Exit access stairways* and *ramps* that serve floor levels within a single story are not required to be enclosed.

[W][S] 1019.3 Occupancies other than Groups I-2 and I-3. In other than Group I-2 and I-3 occupancies, floor openings containing *exit access stairways* or *ramps* ((~~that do not comply with one of the conditions listed in this section~~)) shall be enclosed with a shaft enclosure constructed in accordance with Section 713.

Exceptions:

1. *Exit access stairways* and *ramps* that serve or atmospherically communicate between only two stories. Such interconnected stories shall not be open to other stories.
2. In Group R-1, R-2 or R-3 occupancies, *exit access stairways* and *ramps* connecting more than four stories ((~~or less~~)) serving and contained within an individual *dwelling unit* or *sleeping unit* or *live/work unit.*
3. *Exit access stairways* serving and contained within a Group R-3 congregate residence ((~~or a Group R-4 facility~~)) are not required to be enclosed.
4. *Exit access stairways* and *ramps* that are designed exclusively for circulation in buildings equipped throughout with an *automatic sprinkler system* in accordance with Section 903.3.1.1, where the area of the vertical opening between stories does not exceed twice the horizontal projected area of the *stairway* or *ramp* and the opening is protected by a draft curtain and closely spaced sprinklers in accordance with NFPA 13. In other than Group B and M occupancies, this provision is limited to openings that do not connect more than four stories.
5. *Exit access stairways* and *ramps* within an *atrium* complying with the provisions of Section 404.
6. *Exit access stairways* and *ramps* in *open parking garages* that serve only the parking garage.
7. *Exit access stairways* and *ramps* serving *smoke-protected* or *open-air assembly seating* complying with the *exit access* travel distance requirements of Section 1029.7.

8. *Exit access stairways* and *ramps* between the balcony, gallery or press box and the main assembly floor in occupancies such as theaters, *places of religious worship*, auditoriums and sports facilities.

1019.4 Group I-2 and I-3 occupancies. In Group I-2 and I-3 occupancies, floor openings between stories containing *exit access stairways* or *ramps* are required to be enclosed with a shaft enclosure constructed in accordance with Section 713.

Exception: In Group I-3 occupancies, *exit access stairways* or *ramps* constructed in accordance with Section 408 are not required to be enclosed.

SECTION 1020
CORRIDORS

[S] 1020.1 Construction. *Corridors* shall be fire-resistance rated in accordance with Table 1020.1. The *corridor* walls required to be fire-resistance rated shall comply with Section 708 for *fire partitions*.

Exceptions:

1. A *fire-resistance rating* is not required for *corridors* in an occupancy in Group E where each room that is used for instruction has not less than one door opening directly to the exterior and rooms for assembly purposes have not less than one-half of the required *means of egress* doors opening directly to the exterior. Exterior doors specified in this exception are required to be at ground level.
2. A *fire-resistance rating* is not required for *corridors* contained within a *dwelling unit* or *sleeping unit* in an occupancy in Groups I-1 and R.
3. A *fire-resistance rating* is not required for *corridors* in *open parking garages*.
4. A *fire-resistance rating* is not required for *corridors* in an occupancy in Group B that is a space requiring only a single *means of egress* complying with Section 1006.2.
5. *Corridors* adjacent to the *exterior walls* of buildings shall be permitted to have unprotected openings on unrated *exterior walls* where unrated walls are permitted by Table 602 and unprotected openings are permitted by Table 705.8.
6. In office areas located in buildings of Types IA or IB construction, corridor walls need not be of fire-resistance-rated construction where the corridor side of the corridor walls is finished with materials having a maximum Class B rating as defined in Chapter 8. This exception does not apply to outpatient clinics and medical offices.
7. The occupant load of Group B conference rooms, lunch rooms without grease-producing cooking and other assembly rooms with an occupant load of less than 50 in each room need not be considered when determining whether corridor construction is required, provided such rooms are accessory to an office tenant located in a building of Type IA or IB construction. This provision is permitted to be used in other construction types when the floor on which the assembly room is located is equipped with an *automatic sprinkler system.*

[S] 1020.1.1 Hoistway opening protection. Elevator hoistway openings shall be protected in accordance with Section ((~~3006.2.1~~)) 713.14.2.1.

TABLE 1020.1
CORRIDOR FIRE-RESISTANCE RATING

OCCUPANCY	OCCUPANT LOAD SERVED BY CORRIDOR	REQUIRED FIRE-RESISTANCE RATING (hours)	
		Without sprinkler system	With sprinkler system[c]
H-1, H-2, H-3	All	Not Permitted	1
H-4, H-5	Greater than 30	Not Permitted	1
A, B, E, F, M, S, U	Greater than 30	1	0
R	((~~Greater than 10~~)) All	Not Permitted	0.5[c]/1[d]
I-2[a]	All	Not Permitted	0
I-1, I-3	All	Not Permitted	1[b]
I-4	All	1	0

a. For requirements for occupancies in Group I-2, see Sections 407.2 and 407.3.
b. For a reduction in the fire-resistance rating for occupancies in Group I-3, see Section 408.8.
c. Buildings equipped throughout with an automatic sprinkler system in accordance with Section 903.3.1.1 or 903.3.1.2 where allowed.
d. Group R-3 and R-4 buildings equipped throughout with an automatic sprinkler system in accordance with Section 903.3.1.3. See Section 903.2.8 for occupancies where automatic sprinkler systems are permitted in accordance with Section 903.3.1.3.

DRAFT

1020.2 Width and capacity. The required capacity of *corridors* shall be determined as specified in Section 1005.1, but the minimum width shall be not less than that specified in Table 1020.2.

Exception: In Group I-2 occupancies, *corridors* are not required to have a clear width of 96 inches (2438 mm) in areas where there will not be stretcher or bed movement for access to care or as part of the defend-in-place strategy.

TABLE 1020.2
MINIMUM CORRIDOR WIDTH

OCCUPANCY	MINIMUM WIDTH (inches)
Any facility not listed in this table	44
Access to and utilization of mechanical, plumbing or electrical systems or equipment	24
With an occupant load of less than 50	36
Within a *dwelling unit*	36
In Group E with a *corridor* having an occupant load of 100 or more	72
In *corridors* and areas serving stretcher traffic in *ambulatory care facilities*	72
Group I-2 in areas where required for bed movement	96

For SI: 1 inch = 25.4 mm.

1020.3 Obstruction. The minimum width or required capacity of *corridors* shall be unobstructed.

Exception: Encroachments complying with Section 1005.7.

[W][S] 1020.4 Dead ends. Where more than one *exit* or *exit access doorway* is required, the *exit access* shall be arranged such that dead-end *corridors* do not exceed ((~~20 feet (6096 mm)~~)) 25 feet (7620 mm) in length.

Exceptions:

1. In ((~~in~~)) Group I-3, Condition 2, 3 or 4, occupancies, the dead end in a *corridor* shall not exceed 50 feet (15 240 mm).
2. In occupancies in Groups B, E, F, I-1, M, R-1, R-2, S and U, where the building is equipped throughout with an *automatic sprinkler system* in accordance with Section 903.3.1.1, the length of the dead-end *corridors* shall not exceed 50 feet (15 240 mm).
3. A dead-end *corridor* shall not be limited in length where the length of the dead-end *corridor* is less than 2.5 times the least width of the dead-end *corridor*.
4. In Group I-2 occupancies, the length of dead-end *corridors* that do not serve patient rooms or patient treatment spaces shall not exceed 30 feet (9144 mm).
5. Dead ends are permitted to be 75 feet (22 860 mm) in length in areas containing Group B offices in buildings of Types IA and IB construction, where the cumulative occupant load does not exceed 50 for all areas for which the dead end serves as the only means of egress.

[S] 1020.5 Air movement in corridors. *Corridors* shall not serve as supply, return, exhaust, relief or ventilation air ducts or plenums except as allowed by Mechanical Code Section 601.2.

((~~Exceptions:~~

1. ~~Use of a *corridor* as a source of makeup air for exhaust systems in rooms that open directly onto such *corridors*, including toilet rooms, bathrooms, dressing rooms, smoking lounges and janitor closets, shall be permitted, provided that each such *corridor* is directly supplied with outdoor air at a rate greater than the rate of makeup air taken from the *corridor*.~~
2. ~~Where located within a *dwelling unit*, the use of *corridors* for conveying return air shall not be prohibited.~~
3. ~~Where located within tenant spaces of 1,000 square feet (93 m²) or less in area, utilization of *corridors* for conveying return air is permitted.~~
4. ~~Incidental air movement from pressurized rooms within health care facilities, provided that the *corridor* is not the primary source of supply or return to the room.~~))

1020.5.1 Corridor ceiling. Use of the space between the *corridor* ceiling and the floor or roof structure above as a return air plenum is permitted for one or more of the following conditions:

1. The *corridor* is not required to be of *fire-resistance- rated* construction.
2. The *corridor* is separated from the plenum by *fire-resistance-rated* construction.
3. The air-handling system serving the *corridor* is shut down upon activation of the air-handling unit *smoke detectors* required by the *International Mechanical Code.*

DRAFT

4. The air-handling system serving the *corridor* is shut down upon detection of sprinkler water flow where the building is equipped throughout with an *automatic sprinkler system.*
5. The space between the *corridor* ceiling and the floor or roof structure above the *corridor* is used as a component of an approved engineered smoke control system.

1020.6 Corridor continuity. *Fire-resistance-rated corridors* shall be continuous from the point of entry to an *exit*, and shall not be interrupted by intervening rooms. Where the path of egress travel within a *fire-resistance-rated corridor* to the exit includes travel along unenclosed *exit access stairways* or *ramps*, the *fire-resistance rating* shall be continuous for the length of the *stairway* or *ramp* and for the length of the connecting *corridor* on the adjacent floor leading to the *exit*.

Exceptions:

1. Foyers, lobbies or reception rooms constructed as required for *corridors* shall not be construed as intervening rooms.
2. Enclosed elevator lobbies as permitted by Item 1 of Section 1016.2 shall not be construed as intervening rooms.

SECTION 1021
EGRESS BALCONIES

1021.1 General. Balconies used for egress purposes shall conform to the same requirements as *corridors* for minimum width, required capacity, headroom, dead ends and projections.

[S] 1021.2 Wall separation. Exterior egress balconies shall be separated from the interior of the building by walls and opening protectives as required for *corridors*.

Exceptions:

1. Separation is not required where the exterior egress balcony is served by not less than two *stairways* and a dead-end travel condition does not require travel past an unprotected opening to reach a *stairway*.
2. Separation is not required in buildings equipped throughout with an *automatic sprinkler system* in accordance with Section 903.3.1.1 or 903.3.1.2.

1021.3 Openness. The long side of an egress balcony shall be not less than 50 percent open, and the open area above the *guards* shall be so distributed as to minimize the accumulation of smoke or toxic gases.

1021.4 Location. Exterior egress balconies shall have a minimum *fire separation distance* of 10 feet (3048 mm) measured at right angles from the exterior edge of the egress balcony to the following:

1. Adjacent *lot lines*.
2. Other portions of the building.
3. Other buildings on the same lot unless the adjacent building *exterior walls* and openings are protected in accordance with Section 705 based on *fire separation distance*.

For the purposes of this section, other portions of the building shall be treated as separate buildings.

DRAFT

SECTION 1022
EXITS

1022.1 General. *Exits* shall comply with Sections 1022 through 1027 and the applicable requirements of Sections 1003 through 1015. An *exit* shall not be used for any purpose that interferes with its function as a *means of egress*. Once a given level of *exit* protection is achieved, such level of protection shall not be reduced until arrival at the *exit discharge*. *Exits* shall be continuous from the point of entry into the *exit* to the *exit discharge*.

1022.2 Exterior exit doors. Buildings or structures used for human occupancy shall have not less than one exterior door that meets the requirements of Section 1010.1.1.

1022.2.1 Detailed requirements. Exterior *exit* doors shall comply with the applicable requirements of Section 1010.1.

1022.2.2 Arrangement. Exterior *exit* doors shall lead directly to the *exit discharge* or the *public way*.

SECTION 1023
INTERIOR EXIT STAIRWAYS AND RAMPS

1023.1 General. *Interior exit stairways* and *ramps* serving as an *exit* component in a *means of egress* system shall comply with the requirements of this section. *Interior exit stairways* and *ramps* shall be enclosed and lead directly to the exterior of the building or shall be extended to the exterior of the building with an *exit passageway* conforming to the requirements of Section 1024,

except as permitted in Section 1028.1. An *interior exit stairway* or *ramp* shall not be used for any purpose other than as a *means of egress* and a circulation path.

[W][S] 1023.2 Construction. Enclosures for *interior exit stairways* and *ramps* shall be constructed as *fire barriers* in accordance with Section 707 or *horizontal assemblies* constructed in accordance with Section 711, or both. *Interior exit stairway* and *ramp* enclosures shall have a *fire-resistance rating* of not less than 2 hours where connecting more than four stories ((~~or more~~)) and not less than 1 hour where connecting ((~~less than~~)) four stories or less. The number of stories connected by the *interior exit stairways* or *ramps* shall include any *basements*, but not any *mezzanines*. *Interior exit stairways* and *ramps* shall have a *fire-resistance rating* not less than the floor assembly penetrated, but need not exceed 2 hours.

Exceptions:

1. *Interior exit stairways* and *ramps* in Group I-3 occupancies in accordance with the provisions of Section 408.3.8.
2. *Interior exit stairways* within an *atrium* enclosed in accordance with Section 404.6.
3. Interior exit stairway in accordance with Section 510.2.

1023.3 Termination. *Interior exit stairways* and *ramps* shall terminate at an *exit discharge* or a *public way*.

Exception: A combination of *interior exit stairways*, *interior exit ramps* and *exit passageways*, constructed in accordance with Sections 1023.2, 1023.3.1 and 1024, respectively, and forming a continuous protected enclosure, shall be permitted to extend an *interior exit stairway* or *ramp* to the *exit discharge* or a *public way*.

1023.3.1 Extension. Where *interior exit stairways* and *ramps* are extended to an *exit discharge* or a *public way* by an *exit passageway*, the *interior exit stairway* and *ramp* shall be separated from the *exit passageway* by a *fire barrier* constructed in accordance with Section 707 or a *horizontal assembly* constructed in accordance with Section 711, or both. The *fire-resistance rating* shall be not less than that required for the *interior exit stairway* and *ramp*. A *fire door* assembly complying with Section 716 shall be installed in the *fire barrier* to provide a *means of egress* from the *interior exit stairwa*y and *ramp* to the *exit passageway*. Openings in the *fire barrier* other than the *fire door* assembly are prohibited. Penetrations of the *fire barrier* are prohibited.

Exceptions:

1. Penetrations of the *fire barrier* in accordance with Section 1023.5 shall be permitted.
2. Separation between an *interior exit stairway* or *ramp* and the *exit passageway* extension shall not be required where there are no openings into the *exit passageway* extension.
3. Separation between an *interior exit stairway* or *ramp* and the *exit passageway* extension shall not be required where the *interior exit stairway* and the *exit passageway* extension are pressurized in accordance with Section 909.20.5.
4. A fire barrier and fire door assembly are not required to separate an *exit passageway* from a pressurized stairway.

1023.4 Openings. *Interior exit stairway* and *ramp* opening protectives shall be in accordance with the requirements of Section 716.

Openings in *interior exit stairways* and *ramps* other than unprotected exterior openings shall be limited to those required for *exit access* to the enclosure from normally occupied spaces and for egress from the enclosure.

Elevators shall not open into *interior exit stairways* and *ramps*.

Interpretation I1023.4: Accessory rooms such as restrooms, storage closets, laundry rooms, electrical, communication closets, mechanical rooms and similar spaces shall not open directly into an interior exit stairway. Rooms and spaces that are separated from the stairway by a *corridor* or a vestibule are not considered to open directly into the interior exit stairway. The *corridor* or vestibule shall be constructed as a minimum 1-hour fire-resistance rated fire partition complying with Section 708. Openings shall comply with Sections 716.5.3 and 716.6.7.

[W][S] 1023.5 Penetrations. Penetrations into or through *interior exit stairways* and *ramps* are prohibited except for the following:

1. Equipment and ductwork necessary for independent ventilation or pressurization.
2. *Fire protection systems*.
3. Security systems.
4. Two-way communication systems.
5. Electrical raceway for fire department communication systems and sprinkler monitoring terminating at a steel box not exceeding 16 square inches (0.010 m^2).
6. Electrical raceway serving the interior *exit stairway* and *ramp* and terminating at a steel box not exceeding 16 square inches (0.010 m^2).

DRAFT

7. Structural elements supporting the interior exit stairway or ramp or enclosure, such as beams or joists.
8. Piping used exclusively for the drainage of rainfall runoff from roof areas, provided the roof is not used for a helistop or heliport.
9. Unfired unit heaters required for freeze protection of fire protection equipment are permitted to penetrate one membrane; the conduit serving the heater is permitted to penetrate both membranes.
10. Equipment necessary for electrically controlled stairway door locks and security cameras are permitted to penetrate one membrane; the conduit serving the equipment is permitted to penetrate both membranes.

Such penetrations shall be protected in accordance with Section 714. There shall not be penetrations or communication openings, whether protected or not, between adjacent *interior exit stairways* and *ramps*.

Interpretation I1023.5: Ducts passing through interior exit stairways shall be separated from the stairway by construction having a fire-resistance rating at least equal to the stairway walls. At least one side of the duct enclosure shall abut the interior exit stairway enclosure.

Exception: Membrane penetrations shall be permitted on the outside of the *interior exit stairway* and *ramp*. Such penetrations shall be protected in accordance with Section 714.4.2.

1023.6 Ventilation. Equipment and ductwork for *interior exit stairway* and *ramp* ventilation as permitted by Section 1023.5 shall comply with one of the following items:

1. Such equipment and ductwork shall be located exterior to the building and shall be directly connected to the *interior exit stairway* and *ramp* by ductwork enclosed in construction as required for shafts.
2. Where such equipment and ductwork is located within the *interior exit stairway* and *ramp*, the intake air shall be taken directly from the outdoors and the exhaust air shall be discharged directly to the outdoors, or such air shall be conveyed through ducts enclosed in construction as required for shafts.
3. Where located within the building, such equipment and ductwork shall be separated from the remainder of the building, including other mechanical equipment, with construction as required for shafts.

In each case, openings into the *fire-resistance-rated* construction shall be limited to those needed for maintenance and operation and shall be protected by opening protectives in accordance with Section 716 for shaft enclosures.

The *interior exit stairway* and *ramp* ventilation systems shall be independent of other building ventilation systems.

1023.7 Interior exit stairway and ramp exterior walls. *Exterior walls* of the *interior exit stairway* or *ramp* shall comply with the requirements of Section 705 for *exterior walls*. Where nonrated walls or unprotected openings enclose the exterior of the *stairway* or *ramps* and the walls or openings are exposed by other parts of the building at an angle of less than 180 degrees (3.14 rad), the building *exterior walls* within 10 feet (3048 mm) horizontally of a nonrated wall or unprotected opening shall have a *fire-resistance rating* of not less than 1 hour. Openings within such *exterior* walls shall be protected by opening protectives having a *fire protection rating* of not less than 3/4 hour. This construction shall extend vertically from the ground to a point 10 feet (3048 mm) above the topmost landing of the *stairway* or *ramp*, or to the roof line, whichever is lower.

1023.8 Discharge identification. An *interior exit stairway* and *ramp* shall not continue below its *level of exit discharge* unless an *approved* barrier is provided at the *level of exit discharge* to prevent persons from unintentionally continuing into levels below. Directional exit signs shall be provided as specified in Section 1013.

[S] 1023.9 Stairway identification signs. A sign shall be provided at each floor landing in an *interior exit stairway* and *ramp* connecting more than three stories designating the floor level, the terminus of the top and bottom of the *interior exit stairway* and *ramp* and the identification of the *stairway* or *ramp*. The signage shall state the story of and direction to the *exit discharge*, and ((~~the availability of~~)) whether there is roof access from the *interior exit stairway* and *ramp* for the fire department, and whether the roof access is accessed by roof hatch. The sign shall be located 5 feet (1524 mm) above the floor landing in a position that is readily visible when the doors are in the open and closed positions. In addition to the *stairway* identification sign, a floor-level sign in visual characters, raised characters and braille complying with *ICC A117.1* shall be located at each floor-level landing adjacent to the door leading from the *interior exit stairway* and *ramp* into the *corridor* to identify the floor level.

1023.9.1 Signage requirements. *Stairway* identification signs shall comply with all of the following requirements:

1. The signs shall be a minimum size of 18 inches (457 mm) by 12 inches (305 mm).
2. The letters designating the identification of the *interior exit stairway* and *ramp* shall be not less than 1-1/2 inches (38 mm) in height.
3. The number designating the floor level shall be not less than 5 inches (127 mm) in height and located in the center of the sign.
4. Other lettering and numbers shall be not less than 1 inch (25 mm) in height.

DRAFT

5. Characters and their background shall have a nonglare finish. Characters shall contrast with their background, with either light characters on a dark background or dark characters on a light background.
6. Where signs required by Section 1023.9 are installed in the *interior exit stairways* and *ramps* of buildings subject to Section 1025, the signs shall be made of the same materials as required by Section 1025.4.

1023.10 Elevator lobby identification signs. At landings in *interior exit stairways* where two or more doors lead to the floor level, any door with direct access to an enclosed elevator lobby shall be identified by signage located on the door or directly adjacent to the door stating "Elevator Lobby." Signage shall be in accordance with Section 1023.9.1, Items 4, 5 and 6.

[W][S] 1023.11 ((~~Smokeproof enclosures~~)) Pressurized stairways. Where required by Section 403.5.4, 405.7.2, ((~~or~~)) 412.2.2.1 or 510.2, *interior exit stairways* and *ramps* shall be ((~~*smokeproof enclosures*~~)) pressurized in accordance with Section 909.20.5 or 909.20.6.

1023.11.1 Termination and extension. A ((~~*smokeproof enclosure*~~)) pressurized stairway shall terminate at an *exit discharge* or a *public way*. The ((~~*smokeproof enclosure*~~)) pressurized stairway shall be permitted to be extended by an *exit passageway* in accordance with Section 1023.3. ((~~The *exit passageway* shall be without openings other than the *fire door assembly* required by Section 1023.3.1 and those necessary for egress from the *exit passageway*.~~)) The *exit passageway* shall be separated from the remainder of the building by 2-hour *fire barriers* constructed in accordance with Section 707 or *horizontal assemblies* constructed in accordance with Section 711, or both. The *exit passageway* shall be protected and pressurized in the same manner as the pressurized stairway.

((~~**Exceptions:**~~

~~1. Openings in the *exit passageway* serving a *smokeproof enclosure* are permitted where the *exit passageway* is protected and pressurized in the same manner as the *smokeproof enclosure*, and openings are protected as required for access from other floors.~~

~~2. The *fire barrier* separating the *smokeproof enclosure* from the *exit passageway* is not required, provided that the *exit passageway* is protected and pressurized in the same manner as the *smokeproof enclosure*.~~

~~**3.**~~)) **Exception:** A ((~~*smokeproof enclosure*~~)) pressurized stairway shall be permitted to egress through areas on the *level of exit discharge* or vestibules as permitted by Section 1028.

((~~**1023.11.2 Enclosure access.** Access to the *stairway* or *ramp* within a *smokeproof enclosure* shall be by way of a vestibule or an open exterior balcony.~~

~~**Exception:** Access is not required by way of a vestibule or exterior balcony for *stairways* and *ramps* using the pressurization alternative complying with Section 909.20.5.~~))

1023.12 Standpipes. Standpipes and standpipe hose connections shall be provided where required by Sections 905.3 and 905.4.

[S] 1023.13 Equipment in interior exit stairways. Equipment is prohibited in interior exit stairways except for equipment necessary for independent pressurization, lighting of the interior exit stairway, sprinkler piping, standpipes, electrical equipment for fire department communication and sprinkler monitoring, and unit heaters required to protect fire protection equipment from freezing.

DRAFT

SECTION 1024
EXIT PASSAGEWAYS

1024.1 Exit passageways. *Exit passageways* serving as an exit component in a *means of egress* system shall comply with the requirements of this section. An *exit passageway* shall not be used for any purpose other than as a *means of egress* and a *circulation path*.

1024.2 Width and capacity. The required capacity of *exit passageways* shall be determined as specified in Section 1005.1 but the minimum width shall be not less than 44 inches (1118 mm), except that *exit passageways* serving an occupant load of less than 50 shall be not less than 36 inches (914 mm) in width. The minimum width or required capacity of *exit passageways* shall be unobstructed.

Exception: Encroachments complying with Section 1005.7.

1024.3 Construction. *Exit passageway* enclosures shall have walls, floors and ceilings of not less than a 1-hour *fire-resistance rating*, and not less than that required for any connecting *interior exit stairway* or *ramp*. *Exit passageways* shall be constructed as *fire barriers* in accordance with Section 707 or *horizontal assemblies* constructed in accordance with Section 711, or both.

1024.4 Termination. *Exit passageways* on the *level of exit discharge* shall terminate at an *exit discharge*. *Exit passageways* on other levels shall terminate at an *exit*.

[S] 1024.5 Openings. *Exit passageway* opening protectives shall be in accordance with the requirements of Section 716.

((~~Except as permitted in Section 402.8.7, openings in *exit passageways* other than unprotected exterior openings shall be limited to those necessary for *exit access* to the *exit passageway* from normally occupied spaces and for egress from the *exit passageway*.~~))

The following openings are permitted in *exit passageways*:

1. Doors from rooms and spaces in accordance with Section 402.8.7;
2. Unprotected exterior openings;
3. Doors necessary for exit access from normally occupied spaces;
4. Doors necessary for egress from the *exit passageway*;
5. Doors from interior exit stairways.

Where an *interior exit stairway* or *ramp* is extended to an *exit discharge* or a *public way* by an *exit passageway*, the *exit passageway* shall comply with Section 1023.3.1.

Elevators shall not open into an *exit passageway*.

Interpretation I1024.5: Accessory rooms such as restrooms, storage closets, laundry rooms, electrical, communication closets, mechanical rooms and similar spaces shall not open directly into an *exit passageway*. Rooms and spaces that are separated from the *exit passageway* by a *corridor* or a vestibule are not considered to open directly into the *exit passageway*. The *corridor* or vestibule shall be constructed as a minimum 1-hour fire-resistance rated fire partition complying with Section 708. Openings shall comply with Sections 716.5.3 and 716.6.7.

Code Alternate CA1024.5: An elevator is permitted to open into an *exit passageway* when the following conditions are met:

1. A lobby shall separate the elevator from the *exit passageway*. This is allowed at only one location in the building. The lobby is required whether the elevator hoistway is pressurized or not.
2. The separation shall be constructed as a fire barrier having a fire-resistive rating and opening protectives as for the *exit passageway*. The door between the lobby and the *exit passageway* shall also comply with Section 716.5.3. The door shall have listed gaskets installed at head, jambs and meeting edges. This only applies to the walls common with the *exit passageway*.
3. The lobby shall have a minimum depth of 36 inches. (Note that areas of refuge may require a larger dimension).
4. An elevator lobby constructed as a smoke partition shall be provided at every floor below the level of the *exit passageway* served by the elevator. Hoistway pressurization is permitted to be used in lieu of the lobbies on floors below the level of the *exit passageway*.
5. A door as required by Section 1023.3.1 between an interior exit stairway and the *exit passageway* shall be provided.
6. An *automatic sprinkler system* in accordance with Section 903.3.1.1 shall be provided throughout the floor on which the *exit passageway* is located.

This alternate does not apply to interior exit stairways.

DRAFT

[S] 1024.6 Penetrations. Penetrations into or through an *exit passageway* are prohibited except for the following:

1. Equipment and ductwork necessary for independent pressurization.
2. Fire protection systems.
3. Security systems.
4. Two-way communication systems.
5. Electrical raceway for fire department communication.
6. Electrical raceway serving the *exit passageway* and terminating at a steel box not exceeding 16 square inches (0.010 m^2).

Such penetrations shall be protected in accordance with Section 714. There shall not be penetrations or communicating openings, whether protected or not, between adjacent *exit passageways*.

Exceptions:

1. Membrane penetrations shall be permitted on the outside of the *exit passageway*. Such penetrations shall be protected in accordance with Section 714.4.2.
2. Unfired unit heaters allowed by Section 1023.12 to be installed in interior exit stairways are permitted to penetrate one membrane. The conduit serving the heater is permitted to penetrate both membranes.

1024.7 Ventilation. Equipment and ductwork for *exit passageway* ventilation as permitted by Section 1024.6 shall comply with one of the following:

1. The equipment and ductwork shall be located exterior to the building and shall be directly connected to the *exit passageway* by ductwork enclosed in construction as required for shafts.
2. Where the equipment and ductwork is located within the *exit passageway*, the intake air shall be taken directly from the outdoors and the exhaust air shall be discharged directly to the outdoors, or the air shall be conveyed through ducts enclosed in construction as required for shafts.
3. Where located within the building, the equipment and ductwork shall be separated from the remainder of the building, including other mechanical equipment, with construction as required for shafts.

In each case, openings into the fire-resistance-rated construction shall be limited to those needed for maintenance and operation and shall be protected by opening protectives in accordance with Section 716 for shaft enclosures.

Exit passageway ventilation systems shall be independent of other building ventilation systems.

1024.8 Standpipes. Standpipes and standpipe hose connections shall be provided where required by Sections 905.3 and 905.4.

[W] 1024.9 Exit passageway exterior walls. Exterior walls of the exit passageway shall comply with Section 705. Where nonrated walls or unprotected openings enclose the exterior of the exit passageway and the walls or openings are exposed by other parts of the building at an angle of less than 180 degrees (3.14 rad), the building exterior walls within 10 feet (3048 mm) horizontally of a nonrated wall or unprotected opening shall have a *fire-resistance rating* of not less than 1 hour. Openings within such exterior walls shall be protected by opening protectives having a fire-protection rating of not less than 3/4 hour. This construction shall extend vertically from the ground to a point 10 feet (3048 mm) above the floor of the exit passageway, or to the roof line, whichever is lower.

SECTION 1025
LUMINOUS EGRESS PATH MARKINGS

1025.1 General. *Approved* luminous egress path markings delineating the exit path shall be provided in *high-rise buildings* of Group A, B, E, I-1, M or R-1 occupancies in accordance with this section.

Exception: Luminous egress path markings shall not be required on the *level of exit discharge* in lobbies that serve as part of the exit path in accordance with Section 1028.1, Exception 1.

1025.2 Markings within exit components. Egress path markings shall be provided in *interior exit stairways*, *interior exit ramps* and *exit passageways*, in accordance with Sections 1025.2.1 through 1025.2.6.

1025.2.1 Steps. A solid and continuous stripe shall be applied to the horizontal leading edge of each step and shall extend for the full length of the step. Outlining stripes shall have a minimum horizontal width of 1 inch (25 mm) and a maximum width of 2 inches (51 mm). The leading edge of the stripe shall be placed not more than 1/2 inch (12.7 mm) from the leading edge of the step and the stripe shall not overlap the leading edge of the step by not more than 1/2 inch (12.7 mm) down the vertical face of the step.

Exception: The minimum width of 1 inch (25 mm) shall not apply to outlining stripes *listed* in accordance with UL 1994.

1025.2.2 Landings. The leading edge of landings shall be marked with a stripe consistent with the dimensional requirements for steps.

1025.2.3 Handrails. *Handrails* and handrail extensions shall be marked with a solid and continuous stripe having a minimum width of 1 inch (25 mm). The stripe shall be placed on the top surface of the *handrail* for the entire length of the *handrail*, including extensions and newel post caps. Where *handrails* or handrail extensions bend or turn corners, the stripe shall not have a gap of more than 4 inches (102 mm).

Exception: The minimum width of 1 inch (25 mm) shall not apply to outlining stripes *listed* in accordance with UL 1994.

1025.2.4 Perimeter demarcation lines. Stair landings and other floor areas within *interior exit stairways*, *interior exit ramps* and *exit passageways*, with the exception of the sides of steps, shall be provided with solid and continuous demarcation lines on the floor or on the walls or a combination of both. The stripes shall be 1 to 2 inches (25 mm to 51 mm) wide with interruptions not exceeding 4 inches (102 mm).

Exception: The minimum width of 1 inch (25 mm) shall not apply to outlining stripes *listed* in accordance with UL 1994.

1025.2.4.1 Floor-mounted demarcation lines. Perimeter demarcation lines shall be placed within 4 inches (102 mm) of the wall and shall extend to within 2 inches (51 mm) of the markings on the leading edge of landings. The demarcation lines shall continue across the floor in front of all doors.

Exception: Demarcation lines shall not extend in front of *exit discharge* doors that lead out of an *exit* and through which occupants must travel to complete the exit path.

DRAFT

1025.2.4.2 Wall-mounted demarcation lines. Perimeter demarcation lines shall be placed on the wall with the bottom edge of the stripe not more than 4 inches (102 mm) above the finished floor. At the top or bottom of the *stairs*, demarcation lines shall drop vertically to the floor within 2 inches (51 mm) of the step or landing edge. Demarcation lines on walls shall transition vertically to the floor and then extend across the floor where a line on the floor is the only practical method of outlining the path. Where the wall line is broken by a door, demarcation lines on walls shall continue across the face of the door or transition to the floor and extend across the floor in front of such door.

Exception: Demarcation lines shall not extend in front of *exit discharge* doors that lead out of an *exit* and through which occupants must travel to complete the exit path.

1025.2.4.3 Transition. Where a wall-mounted demarcation line transitions to a floor-mounted demarcation line, or vice versa, the wall-mounted demarcation line shall drop vertically to the floor to meet a complimentary extension of the floor-mounted demarcation line, thus forming a continuous marking.

1025.2.5 Obstacles. Obstacles at or below 6 feet 6 inches (1981 mm) in height and projecting more than 4 inches (102 mm) into the egress path shall be outlined with markings not less than 1 inch (25 mm) in width comprised of a pattern of alternating equal bands, of luminous material and black, with the alternating bands not more than 2 inches (51 mm) thick and angled at 45 degrees (0.79 rad). Obstacles shall include, but are not limited to, standpipes, hose cabinets, wall projections and restricted height areas. However, such markings shall not conceal any required information or indicators including but not limited to instructions to occupants for the use of standpipes.

Exception: The minimum width of 1 inch (25 mm) shall not apply to markings *listed* in accordance with UL 1994.

[S] 1025.2.6 Doors within the exit path. Doors through which occupants must pass in order to complete the exit path shall be provided with markings complying with Sections 1025.2.6.1 through 1025.2.6.3.

Exception: Main exterior exit doors or gates that are obviously and clearly identifiable as exits need not be provided with markings where *approved* by the *building official*.

1025.2.6.1 Emergency exit symbol. The doors shall be identified by a low-location luminous emergency exit symbol complying with NFPA 170. The exit symbol shall be not less than 4 inches (102 mm) in height and shall be mounted on the door, centered horizontally, with the top of the symbol not higher than 18 inches (457 mm) above the finished floor.

1025.2.6.2 Door hardware markings. Door hardware shall be marked with not less than 16 square inches (406 mm^2) of luminous material. This marking shall be located behind, immediately adjacent to, or on the door handle or escutcheon. Where a panic bar is installed, such material shall be not less than 1 inch (25 mm) wide for the entire length of the actuating bar or touchpad.

1025.2.6.3 Door frame markings. The top and sides of the door frame shall be marked with a solid and continuous 1-inch- to 2-inch-wide (25 mm to 51 mm) stripe. Where the door molding does not provide sufficient flat surface on which to locate the stripe, the stripe shall be permitted to be located on the wall surrounding the frame.

1025.3 Uniformity. Placement and dimensions of markings shall be consistent and uniform throughout the same enclosure.

1025.4 Self-luminous and photoluminescent. Luminous egress path markings shall be permitted to be made of any material, including paint, provided that an electrical charge is not required to maintain the required luminance. Such materials shall include, but not be limited to, *self-luminous* materials and *photoluminescent* materials. Materials shall comply with either of the following standards:

1. UL 1994.
2. ASTM E2072, except that the charging source shall be 1 footcandle (11 lux) of fluorescent illumination for 60 minutes, and the minimum luminance shall be 30 milicandelas per square meter at 10 minutes and 5 milicandelas per square meter after 90 minutes.

1025.5 Illumination. Where *photoluminescent* exit path markings are installed, they shall be provided with not less than 1 footcandle (11 lux) of illumination for not less than 60 minutes prior to periods when the building is occupied and continuously during occupancy.

SECTION 1026
HORIZONTAL EXITS

1026.1 Horizontal exits. *Horizontal exits* serving as an *exit* in a *means of egress* system shall comply with the requirements of this section. A *horizontal exit* shall not serve as the only *exit* from a portion of a building, and where two or more *exits* are required, not more than one-half of the total number of *exits* or total *exit* minimum width or required capacity shall be *horizontal exits*.

Exceptions:

1. *Horizontal exits* are permitted to comprise two-thirds of the required *exits* from any building or floor area for occupancies in Group I-2.

DRAFT

2. *Horizontal exits* are permitted to comprise 100 percent of the *exits* required for occupancies in Group I-3. Not less than 6 square feet (0.6 m^2) of accessible space per occupant shall be provided on each side of the *horizontal exit* for the total number of people in adjoining compartments.

1026.2 Separation. The separation between buildings or refuge areas connected by a *horizontal exit* shall be provided by a *fire wall* complying with Section 706; or by a *fire barrier* complying with Section 707 or a *horizontal assembly* complying with Section 711, or both. The minimum *fire-resistance rating* of the separation shall be 2 hours. Opening protectives in *horizontal exits* shall also comply with Section 716. Duct and air transfer openings in a *fire wall* or *fire barrier* that serves as a *horizontal exit* shall also comply with Section 717. The *horizontal exit* separation shall extend vertically through all levels of the building unless floor assemblies have a *fire-resistance rating* of not less than 2 hours and do not have unprotected openings.

Exception: A *fire-resistance rating* is not required at *horizontal exits* between a building area and an above-grade *pedestrian walkway* constructed in accordance with Section 3104, provided that the distance between connected buildings is more than 20 feet (6096 mm).

Horizontal exits constructed as *fire barriers* shall be continuous from *exterior wall* to *exterior wall* so as to divide completely the floor served by the *horizontal exit*.

1026.3 Opening protectives. *Fire doors* in *horizontal exits* shall be self-closing or automatic-closing when activated by a *smoke detector* in accordance with Section 716.2.6.6. Doors, where located in a cross-corridor condition, shall be automatic-closing by activation of a *smoke detector* installed in accordance with Section 716.2.6.6.

1026.4 Refuge area. The refuge area of a *horizontal exit* shall be a space occupied by the same tenant or a public area and each such refuge area shall be adequate to accommodate the original *occupant load* of the refuge area plus the *occupant load* anticipated from the adjoining compartment. The anticipated *occupant load* from the adjoining compartment shall be based on the capacity of the *horizontal exit doors* entering the refuge area or the total *occupant load* of the adjoining compartment, whichever is less.

1026.4.1 Capacity. The capacity of the refuge area shall be computed based on a *net floor area* allowance of 3 square feet (0.2787 m^2) for each occupant to be accommodated therein. Where the *horizontal exit* also forms a *smoke compartment*, the capacity of the refuge area for Group I-1, I-2 and I-3 occupancies and Group B *ambulatory care facilities* shall comply with Sections 407.5.3, 408.6.2, 420.6.1 and 422.3.2 as applicable.

1026.4.2 Number of exits. The refuge area into which a *horizontal exit* leads shall be provided with *exits* adequate to meet the occupant requirements of this chapter, but not including the added *occupant load* imposed by persons entering the refuge area through *horizontal exits* from other areas. Not less than one refuge area exit shall lead directly to the exterior or to an *interior exit stairway* or *ramp.*

Exception: The adjoining compartment shall not be required to have a *stairway* or door leading directly outside, provided that the refuge area into which a *horizontal exit* leads has *stairways* or doors leading directly outside and are so arranged that egress shall not require the occupants to return through the compartment from which egress originates.

1026.5 Standpipes. Standpipes and standpipe hose connections shall be provided where required by Sections 905.3 and 905.4.

DRAFT

SECTION 1027
EXTERIOR EXIT STAIRWAYS AND RAMPS

1027.1 Exterior exit stairways and ramps. *Exterior exit stairways* and *ramps* serving as an element of a required *means of egress* shall comply with this section.

1027.2 Use in a means of egress. *Exterior exit stairways* shall not be used as an element of a required *means of egress* for Group I-2 occupancies. For occupancies in other than Group I-2, *exterior exit stairways* and *ramps* shall be permitted as an element of a required *means of egress* for buildings not exceeding six stories above *grade plane* or that are not *high-rise buildings*.

[S] 1027.3 Open side. *Exterior exit stairways* and *ramps* serving as an element of a required *means of egress* shall be at least 50 percent open on not less than one side. ((~~, except for required structural columns, beams, *handrails* and *guards*.~~)) An open side shall have not less than ((~~35 square feet (3.3 m^2)~~)) 28 square feet (2.6 m^2) of aggregate open area adjacent to each floor level. ((~~and the level of each intermediate landing. The required open area shall be located not less than 42 inches (1067 mm) above the adjacent floor or landing level.~~)) The open area shall be distributed to prevent accumulation of smoke or toxic gases.

1027.4 Side yards. The open areas adjoining *exterior exit stairways* or *ramps* shall be either *yards*, *courts* or *public ways*; the remaining sides are permitted to be enclosed by the *exterior walls* of the building.

1027.5 Location. *Exterior exit stairways* and *ramps* shall have a minimum fire separation distance of 10 feet (3048 mm) measured at right angles from the exterior edge of the *stairway* or *ramps*, including landings, to:

1. Adjacent *lot lines*.
2. Other portions of the building.

3. Other buildings on the same lot unless the adjacent building *exterior walls* and openings are protected in accordance with Section 705 based on *fire separation distance.*

For the purposes of this section, other portions of the building shall be treated as separate buildings.

Exception: *Exterior exit stairways* and *ramps* serving individual *dwelling units* of Group R-3 shall have a minimum *fire separation distance* of 5 feet (1525 mm).

1027.6 Exterior exit stairway and ramp protection. *Exterior exit stairways* and *ramps* shall be separated from the interior of the building as required in Section 1023.2. Openings shall be limited to those necessary for egress from normally occupied spaces. Where a vertical plane projecting from the edge of an *exterior exit stairway* or *ramp* and landings is exposed by other parts of the building at an angle of less than 180 degrees (3.14 rad), the exterior wall shall be rated in accordance with Section 1023.7.

Exceptions:

1. Separation from the interior of the building is not required for occupancies, other than those in Group R-1 or R-2, in buildings that are not more than two stories above *grade plane* where a *level of exit discharge* serving such occupancies is the first story above *grade plane*.
2. Separation from the interior of the building is not required where the *exterior exit stairway* or *ramp* is served by an *exterior exit ramp* or balcony that connects two remote *exterior exit stairways* or other *approved exits* with a perimeter that is not less than 50 percent open. To be considered open, the opening shall be not less than 50 percent of the height of the enclosing wall, with the top of the openings not less than 7 feet (2134 mm) above the top of the balcony.
3. Separation from the open-ended *corridor* of the building is not required for *exterior exit stairways* or *ramps*, provided that Items 3.1 through 3.5 are met:
   - 3.1. The building, including open-ended *corridors*, and *stairways* and *ramps*, shall be equipped throughout with an *automatic sprinkler system* in accordance with Section 903.3.1.1 or 903.3.1.2.
   - 3.2. The open-ended *corridors* comply with Section 1020.
   - 3.3. The open-ended *corridors* are connected on each end to an *exterior exit stairway* or *ramp* complying with Section 1027.
   - 3.4. The *exterior walls* and openings adjacent to the *exterior exit stairway* or *ramp* comply with Section 1023.7 <u>and 1027.7</u>.
   - 3.5. At any location in an open-ended *corridor* where a change of direction exceeding 45 degrees (0.79 rad) occurs, a clear opening of not less than 35 square feet (3.3 m^2) or an *exterior stairway* or *ramp* shall be provided. Where clear openings are provided, they shall be located so as to minimize the accumulation of smoke or toxic gases.
4. In Group R-3 occupancies not more than four stories in height, *exterior exit stairways* and *ramps* serving individual *dwelling units* are not required to be separated from the interior of the building where the *exterior exit stairway* or *ramp* discharges directly to grade.

<u>[S] 1027.7 Exterior exit stairway and ramp exterior walls.</u> <u>Where nonrated walls or unprotected openings enclose the exterior of the stairway and the walls or openings are exposed by other parts of the building at an angle of less than 180 degrees (3.14 rad), the building exterior walls within 10 feet (3048 mm) horizontally of a nonrated wall or unprotected opening shall have a fire-resistance rating of not less than 1 hour. Openings within such exterior walls shall be protected by opening protectives having a fire protection rating of not less than 3/4 hour. This construction shall extend vertically from the ground to a point 10 feet (3048 mm) above the topmost landing of the stairway or to the roof line, whichever is lower.</u>

SECTION 1028
EXIT DISCHARGE

[S] 1028.1 General. *Exits* shall discharge directly to the exterior of the building. The *exit discharge* shall be at grade or shall provide a direct path of egress travel to grade. The *exit discharge* shall not reenter a building <u>except into an exit or as otherwise *approved* by the *building official*</u>. The combined use of Exceptions 1 and 2 shall not exceed 50 percent of the number and minimum width or required capacity of the required exits.

Exceptions:

1. Not more than 50 percent of the number and minimum width or required capacity of *interior exit stairways* and *ramps* is permitted to egress through areas on the level of discharge provided that all of the following conditions are met:
   - 1.1. Discharge of *interior exit stairways* and *ramps* shall be provided with a free and unobstructed path of travel to an exterior *exit* door and such *exit* is readily visible and identifiable from the point of termination of the enclosure.

DRAFT

1.2. The entire area of the *level of exit discharge* is separated from areas below by construction conforming to the *fire-resistance rating* for the enclosure.

1.3. The egress path from the *interior exit stairway* and *ramp* on the *level of exit discharge* is protected throughout by an *approved automatic sprinkler system*. Portions of the *level of exit discharge* with access to the egress path shall be either equipped throughout with an *automatic sprinkler system* installed in accordance with Section 903.3.1.1 or 903.3.1.2, or separated from the egress path in accordance with the requirements for the enclosure of *interior exit stairways* or *ramps*.

1.4. Where a required *interior exit stairway* or *ramp* and an *exit access stairway* or *ramp* serve the same floor level and terminate at the same *level of exit discharge*, the termination of the *exit access stairway* or *ramp* and the *exit discharge* door of the *interior exit stairway* or *ramp* shall be separated by a distance of not less than 30 feet (9144 mm) or not less than one-fourth the length of the maximum overall diagonal dimension of the building, whichever is less. The distance shall be measured in a straight line between the *exit discharge* door from the *interior exit stairway* or *ramp* and the last tread of the *exit access stairway* or termination of slope of the *exit access ramp*.

2. Not more than 50 percent of the number and minimum width or required capacity of the *interior exit stairways* and *ramps* is permitted to egress through a vestibule provided that all of the following conditions are met:

2.1. The entire area of the vestibule is separated from areas below by construction conforming to the *fire-resistance rating* of the *interior exit stairway* or *ramp enclosure*.

2.2. The depth from the exterior of the building is not greater than 10 feet (3048 mm) and the length is not greater than 30 feet (9144 mm).

2.3. The area is separated from the remainder of the *level of exit discharge* by a *fire partition* constructed in accordance with Section 708.

Exception: The maximum transmitted temperature rise is not required.

2.4. The area is used only for *means of egress* and *exits* directly to the outside.

Interpretation I1028.1: Exception 2 applies only to vestibules with *direct access* from the *interior exit stairway* or *ramp*.

3. *Horizontal exits* complying with Section 1026 shall not be required to discharge directly to the exterior of the building.

[S] 1028.1.1 Remoteness of egress paths at building exterior. The paths of egress travel from separate exits shall be separated by at least 10 feet at the exterior of the building. The separation shall be maintained for at least 10 feet, as measured from the face of the exterior wall containing the exits, before the paths of egress travel are permitted to converge. The paths of egress travel, before and after convergence, shall provide unobstructed access to a *public way*. Where 3 or more exits are required, at least 2 paths shall be arranged in accordance with this provision.

1028.2 Exit discharge width or capacity. The minimum width or required capacity of the *exit discharge* shall be not less than the minimum width or required capacity of the *exits* being served.

1028.3 Exit discharge components. *Exit discharge* components shall be sufficiently open to the exterior so as to minimize the accumulation of smoke and toxic gases.

1028.4 Egress courts. *Egress courts* serving as a portion of the *exit discharge* in the *means of egress* system shall comply with the requirements of Sections 1028.4.1 and 1028.4.2.

1028.4.1 Width or capacity. The required capacity of *egress courts* shall be determined as specified in Section 1005.1, but the minimum width shall be not less than 44 inches (1118 mm), except as specified herein. *Egress courts* serving Group R-3 and U occupancies shall be not less than 36 inches (914 mm) in width. The required capacity and width of *egress courts* shall be unobstructed to a height of 7 feet (2134 mm).

The width of the *egress court* shall be not less than the required capacity.

Exception: Encroachments complying with Section 1005.7.

[S] 1028.4.2 Construction and openings. Where an *egress court* serving a building or portion thereof is less than 10 feet (3048 mm) in width, the *egress court* walls shall have not less than 1-hour *fire-resistance-rated* construction for a distance of 10 feet (3048 mm) above the floor of the *egress court*. Openings within such walls shall be protected by opening protectives having a fire protection rating of not less than 3/4 hour.

Exceptions:

1. *Egress courts* serving an *occupant load* of less than 10.
2. *Egress courts* serving Group R-3.
3. In buildings other than those which have a single means of egress under Section 1006.3.2 item 7, opening protection need not be provided where it is possible to exit in two directions from the *court*.

DRAFT

[S] 1028.5 Access to a public way. The *exit discharge* shall provide a direct and unobstructed access to a *public way*. Converging paths of egress travel located in the *exit discharge* are permitted under the conditions of 1028.1.1.

Exception: Where access to a *public way* cannot be provided, a safe dispersal area shall be provided where all of the following are met:

1. The area shall be of a size to accommodate not less than 5 square feet (0.46 m^2) for each person.
2. The area shall be located on the same lot not less than 50 feet (15 240 mm) away from the building requiring egress.
3. The area shall be permanently maintained and identified as a safe dispersal area.
4. The area shall be provided with a safe and unobstructed path of travel from the building.

SECTION 1029
ASSEMBLY

1029.1 General. A room or space used for assembly purposes that contains seats, tables, displays, equipment or other material shall comply with this section.

1029.1.1 Bleachers. *Bleachers*, *grandstands* and *folding and telescopic seating*, that are not building elements, shall comply with ICC 300.

1029.1.1.1 Spaces under grandstands and bleachers. Spaces under *grandstands* or *bleachers* shall be separated by *fire barriers* complying with Section 707 and *horizontal assemblies* complying with Section 711 with not less than 1-hour *fire-resistance-rated* construction.

Exceptions:

1. Ticket booths less than 100 square feet (9.29 m^2) in area.
2. Toilet rooms.
3. Other accessory use areas 1,000 square feet (92.9 m^2) or less in area and equipped with an *automatic sprinkler system* in accordance with Section 903.3.1.1.

1029.2 Assembly main exit. A building, room or space used for assembly purposes that has an *occupant load* of greater than 300 and is provided with a main *exit*, that main *exit* shall be of sufficient capacity to accommodate not less than one-half of the *occupant load*, but such capacity shall be not less than the total required capacity of all *means of egress* leading to the *exit*. Where the building is classified as a Group A occupancy, the main *exit* shall front on not less than one street or an unoccupied space of not less than 10 feet (3048 mm) in width that adjoins a street or *public way*. In a building, room or space used for assembly purposes where there is not a well-defined main *exit* or where multiple main *exits* are provided, *exits* shall be permitted to be distributed around the perimeter of the building provided that the total capacity of egress is not less than 100 percent of the required capacity.

1029.3 Assembly other exits. In addition to having access to a main *exit*, each level in a building used for assembly purposes having an *occupant load* greater than 300 and provided with a main *exit*, shall be provided with additional *means of egress* that shall provide an egress capacity for not less than one-half of the total *occupant load* served by that level and shall comply with Section 1007.1. In a building used for assembly purposes where there is not a well-defined main *exit* or where multiple main *exits* are provided, *exits* for each level shall be permitted to be distributed around the perimeter of the building, provided that the total width of egress is not less than 100 percent of the required width.

1029.4 Foyers and lobbies. In Group A-1 occupancies, where persons are admitted to the building at times when seats are not available, such persons shall be allowed to wait in a lobby or similar space, provided that such lobby or similar space shall not encroach on the minimum width or required capacity of the *means of egress*. Such foyer, if not directly connected to a public street by all the main entrances or *exits*, shall have a straight and unobstructed *corridor* or path of travel to every such main entrance or *exit*.

1029.5 Interior balcony and gallery means of egress. For balconies, galleries or press boxes having a seating capacity of 50 or more located in a building, room or space used for assembly purposes, not less than two *means of egress* shall be provided, with one from each side of every balcony, gallery or press box.

1029.6 Capacity of aisle for assembly. The required capacity of *aisles* shall be not less than that determined in accordance with Section 1029.6.1 where *smoke-protected assembly seating* is not provided, Section 1029.6.2 where *smoke-protected assembly seating* is provided and Section 1029.6.3 where *open-air assembly seating* is provided.

1029.6.1 Without smoke protection. The required capacity in inches (mm) of the *aisles* for assembly seating without smoke protection shall be not less than the *occupant load* served by the egress element in accordance with all of the following, as applicable:

DRAFT

1029.17 Assembly guards. *Guards* adjacent to seating in a building, room or space used for assembly purposes shall be provided where required by Section 1015 and shall be constructed in accordance with Section 1015 except where provided in accordance with Sections 1029.17.1 through 1029.17.4. At *bleachers*, *grandstands* and *folding and telescopic seating*, *guards* must be provided where required by ICC 300 and Section 1029.17.1.

1029.17.1 Perimeter guards. Perimeter *guards* shall be provided where the footboards or walking surface of seating facilities are more than 30 inches (762 mm) above the floor or grade below. Where the seatboards are adjacent to the perimeter, *guard* height shall be 42 inches (1067 mm) high minimum, measured from the seatboard. Where the seats are self-rising, *guard* height shall be 42 inches (1067 mm) high minimum, measured from the floor surface. Where there is an *aisle* between the seating and the perimeter, the *guard* height shall be measured in accordance with Section 1015.3.

Exceptions:

1. *Guards* that impact sightlines shall be permitted to comply with Section 1029.17.3.
2. *Bleachers*, *grandstands* and *folding and telescopic seating* shall not be required to have perimeter *guards* where the seating is located adjacent to a wall and the space between the wall and the seating is less than 4 inches (102 mm).

1029.17.2 Cross aisles. Cross *aisles* located more than 30 inches (762 mm) above the floor or grade below shall have *guards* in accordance with Section 1015.

Where an elevation change of 30 inches (762 mm) or less occurs between a cross *aisle* and the adjacent floor or grade below, *guards* not less than 26 inches (660 mm) above the *aisle* floor shall be provided.

Exception: Where the backs of seats on the front of the cross *aisle* project 24 inches (610 mm) or more above the adjacent floor of the *aisle*, a *guard* need not be provided.

1029.17.3 Sightline-constrained guard heights. Unless subject to the requirements of Section 1029.17.4, a fascia or railing system in accordance with the *guard* requirements of Section 1015 and having a minimum height of 26 inches (660 mm) shall be provided where the floor or footboard elevation is more than 30 inches (762 mm) above the floor or grade below and the fascia or railing would otherwise interfere with the sightlines of immediately adjacent seating.

1029.17.4 Guards at the end of aisles. A fascia or railing system complying with the *guard* requirements of Section 1015 shall be provided for the full width of the *aisle* where the foot of the *aisle* is more than 30 inches (762 mm) above the floor or grade below. The fascia or railing shall be not less than 36 inches (914 mm) high and shall provide not less than 42 inches (1067 mm) measured diagonally between the top of the rail and the *nosing* of the nearest tread.

DRAFT

SECTION 1030
EMERGENCY ESCAPE AND RESCUE

[S] 1030.1 General. In addition to the *means of egress* required by this chapter, *emergency escape and rescue openings* shall be provided in the following occupancies:

1. Group R-2 occupancies located in stories with only one *exit* or *access to* only one *exit* as permitted by Tables 1006.3.3(1) and 1006.3.3(2).
2. Buildings designed with a single exit according to Section 1006.3.2, exception 7.

((~~2~~)) 3. Group R-3 and R-4 occupancies.

1030.1.1 Where required. ((~~*Basements*~~)) Where required by Section 1030.1, *basements* and sleeping rooms below the fourth story above *grade plane* shall have not fewer than one exterior *emergency escape and rescue opening* in accordance with this section. Where *basements* contain one or more sleeping rooms, *emergency escape and rescue openings* shall be required in each sleeping room, but shall not be required in adjoining areas of the *basement*. Such openings shall open directly into a *public way* or to a *yard* or *court* that opens to a *public way*.

Exceptions:

1. *Basements* with a ceiling height of less than 80 inches (2032 mm) shall not be required to have *emergency escape and rescue openings*.
2. *Emergency escape and rescue openings* are not required from *basements* or sleeping rooms that have an *exit* door or *exit access* door that opens directly into a *public way* or to a *yard*, *court* or exterior exit balcony that opens to a *public way*.
3. *Basements* without *habitable spaces* and having not more than 200 square feet (18.6 m^2) in floor area shall not be required to have *emergency escape and rescue openings*.
4. Within individual *dwelling* and *sleeping units* in Groups R-2 and R-3, where the building is equipped throughout with an *automatic sprinkler system* installed in accordance with Section 903.3.1.1, 903.3.1.2 or 903.3.1.3, *sleeping rooms* in basements shall not be required to have *emergency escape and rescue openings* provided that the basement has one of the following:

4.1. One *means of egress* and one *emergency escape and rescue opening.*

4.2. Two *means of egress.*

((~~1030.1.1~~)) 1030.1.2 Operational constraints and opening control devices. *Emergency escape and rescue openings* shall be operational from inside the room without the use of keys or tools. Window-opening control devices complying with ASTM F2090 shall be permitted for use on windows serving as a required *emergency escape and rescue opening.*

1030.2 Minimum size. *Emergency escape and rescue openings* shall have a minimum net clear opening of 5.7 square feet (0.53 m^2).

Exception: The minimum net clear opening for *grade-floor emergency escape and rescue openings* shall be 5 square feet (0.46 m^2).

1030.2.1 Minimum dimensions. The minimum net clear opening height dimension shall be 24 inches (610 mm). The minimum net clear opening width dimension shall be 20 inches (508 mm). The net clear opening dimensions shall be the result of normal operation of the opening.

1030.3 Maximum height from floor. *Emergency escape and rescue openings* shall have the bottom of the clear opening not greater than 44 inches (1118 mm) measured from the floor.

1030.4 Window wells. An *emergency escape and rescue opening* with a finished sill height below the adjacent ground level shall be provided with a window well in accordance with Sections 1030.4.1 and 1030.4.2.

1030.4.1 Minimum size. The minimum horizontal area of the window well shall be 9 square feet (0.84 m^2), with a minimum dimension of 36 inches (914 mm). The area of the window well shall allow the *emergency escape and rescue opening* to be fully opened.

1030.4.2 Ladders or steps. Window wells with a vertical depth of more than 44 inches (1118 mm) shall be equipped with an *approved* permanently affixed ladder or steps. Ladders or rungs shall have an inside width of not less than 12 inches (305 mm), shall project not less than 3 inches (76 mm) from the wall and shall be spaced not more than 18 inches (457 mm) on center (o.c.) vertically for the full height of the window well. The ladder or steps shall not encroach into the required dimensions of the window well by more than 6 inches (152 mm). The ladder or steps shall not be obstructed by the *emergency escape and rescue opening*. Ladders or steps required by this section are exempt from the *stairway* requirements of Section 1011.

1030.5 Bars, grilles, covers and screens. Bars, grilles, covers, screens or similar devices are permitted to be placed over *emergency escape and rescue openings*, bulkhead enclosures or window wells that serve such openings, provided that the minimum net clear opening size complies with Sections 1030.1.1 through 1030.4.2 and such devices shall be releasable or removable from the inside without the use of a key, tool or force greater than that which is required for normal operation of the *emergency escape and rescue opening*. Where such bars, grilles, covers, screens or similar devices are installed in existing buildings, they shall not reduce the net clear opening of the *emergency escape and rescue opening* and *smoke alarms* shall be installed in accordance with Section 907.2.10 regardless of the valuation of the *alteration*.

[W] 1030.6 Drainage. Window wells shall be designed for proper drainage by connecting to the building's foundation drainage system required by Section 1805.4.2 or by an approved alternative method.

DRAFT

CHAPTER 11

ACCESSIBILITY

Note: The City of Seattle does not have authority to enforce or interpret the Americans with Disabilities Act (ADA), ADA Accessibility Guidelines (ADAAG), Fair Housing Act and other state and federal accessibility laws. Approval of a building by SDCI cannot guarantee compliance with those regulations.

User note:

About this chapter: *Chapter 11 contains provisions that set forth requirements for accessibility of buildings and their associated sites and facilities for people with physical disabilities. The fundamental philosophy of the code on the subject of accessibility is that everything is required to be accessible. This is reflected in the basic applicability requirement (see Section 1103.1). The code's scoping requirements then address the conditions under which accessibility is not required in terms of exceptions to this general mandate. While the IBC contains scoping provisions for accessibility (for example, what, where and how many), ICC A117.1, Accessible and Usable Buildings and Facilities, is the referenced standard for the technical provisions (in other words, how). Accessibility criteria for existing buildings are addressed in the* International Existing Building Code®. *The* International Residential Code® *references Chapter 11 for accessibility provisions; therefore, this chapter may be applicable to housing covered under the* International Residential Code. *The provisions in the I-Codes are intended to meet or exceed the requirements in the federal accessibility requirement found in the Americans with Disabilities Act and the Fair Housing Act.*

There are many accessibility issues that not only benefit people with disabilities, but also provide a tangible benefit to people without disabilities. This type of requirement can be set forth in the code as generally applicable without necessarily identifying it specifically as an accessibility-related issue. Such a requirement would then be considered as having been "mainstreamed." For example, visible alarms are located in Chapter 9 and accessible means of egress and ramp requirements are addressed in Chapter 10.

DRAFT

SECTION 1101
GENERAL

1101.1 Scope. The provisions of this chapter shall control the design and construction of facilities for accessibility for individuals with disabilities.

SECTION 1102
COMPLIANCE

[W] 1102.1 Design. Buildings and facilities shall be designed and constructed to be *accessible* in accordance with this code and ICC A117.1, except those portions of ICC A117.1 amended by this section.

1102.1.1 (ICC A117.1 Section 403.5) Clear width of accessible route. Clear width of an *accessible route* shall comply with ICC A117.1 Section 403.5. For exterior routes of travel, the minimum clear width is 44 inches (1118 mm).

1102.1.2 (ICC A117.1 Section 404.2.8) Door-opening force. Fire doors shall have the minimum opening force allowed by the *building official*. The force for pushing or pulling open doors other than fire doors shall be as follows:

1. Interior hinged door: 5.0 pounds (22.2 N) maximum.
2. Interior sliding or folding doors: 5.0 pounds (22.2 N) maximum.
3. Exterior hinged, sliding or folding door: 10 pounds (44.5 N) maximum.

Exception: Interior or exterior automatic doors complying with ICC A117.1 Section 404.

These forces do not apply to the force required to retract latch bolts or disengage other devices that hold the door in a closed position.

1102.1.3 (ICC A117.1 Section 407.4.6.2.2) Arrangement of elevator car buttons. Elevator car buttons shall be arranged with numbers in ascending order. When two or more columns of buttons are provided they shall read from left to right.

1102.1.4 (ICC A117.1 606.7) Operable parts. Operable parts on drying equipment, towel or cleansing product dispensers, and disposal fixtures shall comply with ICC A117.1 Table 603.6.

1102.1.5 (ICC A117.1 Section 604.6) Flush controls. Flush controls shall be hand operated or automatic. Hand operated flush controls shall comply with ICC A117.1 Section 309, except the maximum height above the floor shall be 44 inches (1118 mm). Flush controls shall be located on the open side of the water closet.

Exception: In ambulatory accessible compartments complying with ICC A117.1 Section 604.10, flush controls are permitted to be located on either side of the water closet.

1102.1.6 (ICC A117.1 Section 703.6.3.1) International Symbol of Accessibility. Where the International Symbol of Accessibility is required, it shall be proportioned complying with ICC A117.1 Figure 703.6.3.1. All interior and exterior signs depicting the International Symbol of Accessibility shall be white on a blue background.

[W] 1101.2.7 (ICC A117.1 Section 502.2) Vehicle space size. Car and van parking spaces shall be 96 inches (2440 mm) minimum in width.

1101.2.8 (ICC A117.1 Section 502.4.2) Access aisle width. Access aisles serving car parking spaces shall be 60 inches (1525 mm) minimum in width. Access aisles serving van parking spaces shall be 96 inches (2440 mm) minimum in width.

1101.2.9 (ICC A117.1 Section 502.7) Identification. Accessible parking spaces shall be indicated by a vertical sign. The signs shall include the International Symbol of Accessibility complying with subsection 703.6.3.1. Such symbol shall be white on a blue background. Signs identifying van parking spaces shall contain the designation "van accessible." The sign may include additional language such as, but not limited to, an indication of the amount of the monetary penalty defined in RCW 46.19.050 for parking in the space without a valid permit. A vertical "no parking" sign shall be erected at the head of each access aisle located adjacent to an accessible parking space. The sign may include additional language such as, but not limited to, an indication of any penalty for parking in an access aisle. Such signs shall be 60 inches (1525 mm) minimum above the floor of the parking space, measured to the bottom of the sign.

SECTION 1103
SCOPING REQUIREMENTS

1103.1 Where required. *Sites*, buildings, *structures*, *facilities*, elements and spaces, temporary or permanent, shall be *accessible* to individuals with disabilities.

1103.2 General exceptions. *Sites*, buildings, *structures*, *facilities*, elements and spaces shall be exempt from this chapter to the extent specified in this section.

1103.2.1 Specific requirements. *Accessibility* is not required in buildings and *facilities*, or portions thereof, to the extent permitted by Sections 1104 through 1111.

1103.2.2 Employee work areas. Spaces and elements within *employee work areas* shall only be required to comply with Sections 907.5.2.3.1, 1009 and 1104.3.1 and shall be designed and constructed so that individuals with disabilities can approach, enter and exit the work area. Work areas, or portions of work areas, other than raised courtroom stations in accordance with Section 1108.4.1.4, that are less than 300 square feet (30 m^2) in area and located 7 inches (178 mm) or more above or below the ground or finished floor where the change in elevation is essential to the function of the space shall be exempt from all requirements.

1103.2.3 Detached dwellings. Detached one- and two- family *dwellings*, their accessory structures and their associated *sites* and *facilities* are not required to comply with this chapter.

1103.2.4 Utility buildings. Group U occupancies are not required to comply with this chapter other than the following:

1. In agricultural buildings, access is required to paved work areas and areas open to the general public.
2. Private garages or carports that contain required *accessible* parking.

1103.2.5 Construction sites. Structures, *sites* and equipment directly associated with the actual processes of construction including, but not limited to, scaffolding, bridging, materials hoists, materials storage or construction trailers are not required to comply with this chapter.

1103.2.6 Raised areas. Raised areas used primarily for purposes of security, life safety or fire safety including, but not limited to, observation galleries, prison guard towers, fire towers or lifeguard stands are not required to comply with this chapter.

1103.2.7 Limited access spaces. Spaces accessed only by ladders, catwalks, crawl spaces, freight elevators or very narrow passageways are not required to comply with this chapter.

1103.2.8 Areas in places of religious worship. Raised or lowered areas, or portions of areas, in *places of religious worship* that are less than 300 square feet (30 m^2) in area and located 7 inches (178 mm) or more above or below the finished floor and used primarily for the performance of religious ceremonies are not required to comply with this chapter.

1103.2.9 Equipment spaces. Spaces frequented only by service personnel for maintenance, repair or occasional monitoring of equipment are not required to comply with this chapter.

1103.2.10 Highway tollbooths. Highway tollbooths where the access is provided only by bridges above the vehicular traffic or underground tunnels are not required to comply with this chapter.

1103.2.11 Residential Group R-1. Buildings of Group R-1 containing not more than five *sleeping units* for rent or hire that are also occupied as the residence of the proprietor are not required to comply with this chapter.

DRAFT

Exceptions:

1. An *accessible route* is not required to *stories*, *mezzanines* and occupied roofs that have an aggregate area of not more than 3,000 square feet (278.7 m^2) and are located above and below *accessible* levels. This exception shall not apply to:
   1.1. Multiple tenant facilities of Group M occupancies containing five or more tenant spaces used for the sales or rental of goods and where at least one such tenant space is located on a floor level above or below the *accessible* levels.
   1.2. *Stories* or *mezzanines* containing offices of health care providers (Group B or I).
   1.3. Passenger transportation facilities and airports (Group A-3 or B).
   1.4. Government buildings.
2. *Stories*, *mezzanines* or occupied roofs that do not contain *accessible* elements or other spaces as determined by Section 1107 or 1108 are not required to be served by an *accessible route* from an *accessible* level.
3. In air traffic control towers, an *accessible route* is not required to serve the cab and the floor immediately below the cab.
4. Where a two-story building or facility has one *story* or *mezzanine* with an *occupant load* of five or fewer persons that does not contain *public use* space, that *story* or *mezzanine* shall not be required to be connected by an *accessible route* to the *story* above or below.

1104.5 Location. *Accessible routes* shall coincide with or be located in the same area as a general *circulation path*. Where the *circulation path* is interior, the *accessible route* shall be interior. Where only one *accessible route* is provided, the *accessible route* shall not pass through kitchens, storage rooms, restrooms, closets or similar spaces.

Exceptions:

1. *Accessible routes* from parking garages contained within and serving *Type B units* are not required to be interior.
2. A single *accessible route* is permitted to pass through a kitchen or storage room in an *Accessible unit*, *Type A unit* or *Type B unit*.

1104.6 Security barriers. Security barriers including, but not limited to, security bollards and security check points shall not obstruct a required *accessible route* or accessible *means of egress*.

Exception: Where security barriers incorporate elements that cannot comply with these requirements, such as certain metal detectors, fluoroscopes or other similar devices, the *accessible route* shall be permitted to be provided adjacent to security screening devices. The *accessible route* shall permit persons with disabilities passing around security barriers to maintain visual contact with their personal items to the same extent provided others passing through the security barrier.

[S] 1104.7 Raised platforms. In banquet rooms or spaces where a head table or speaker's lectern is located on a raised platform, an *accessible route* shall be provided to the platform.

DRAFT

SECTION 1105
ACCESSIBLE ENTRANCES

1105.1 Public entrances. In addition to *accessible* entrances required by Sections 1105.1.1 through 1105.1.7, at least 60 percent of all *public entrance*s shall be *accessible*.

Exceptions:

1. An *accessible* entrance is not required to areas not required to be *accessible*.
2. Loading and *service entrances* that are not the only entrance to a tenant space.

1105.1.1 Parking garage entrances. Where provided, direct access for pedestrians from parking structures to buildings or facility entrances shall be *accessible*.

1105.1.2 Entrances from tunnels or elevated walkways. Where direct access is provided for pedestrians from a pedestrian tunnel or elevated walkway to a building or facility, at least one entrance to the building or facility from each tunnel or walkway shall be *accessible*.

1105.1.3 Restricted entrances. Where *restricted entrances* are provided to a building or facility, at least one *restricted entrance* to the building or facility shall be *accessible*.

1105.1.4 Entrances for inmates or detainees. Where entrances used only by inmates or detainees and security personnel are provided at judicial facilities, detention facilities or correctional facilities, at least one such entrance shall be *accessible*.

1105.1.5 Service entrances. If a *service entrance* is the only entrance to a building or a tenant space in a facility, that entrance shall be *accessible*.

1105.1.6 Tenant spaces. At least one *accessible* entrance shall be provided to each tenant in a facility.

Exception: An *accessible* entrance is not required to self-service storage facilities that are not required to be *accessible.*

1105.1.7 Dwelling units and sleeping units. At least one *accessible* entrance shall be provided to each *dwelling unit* and *sleeping unit* in a facility.

Exception: An *accessible* entrance is not required to *dwelling units* and *sleeping units* that are not required to be *Accessible units*, *Type A units* or *Type B units*.

[W] 1105.1.8 Automatic doors. In facilities with the occupancies and building occupant loads indicated in Table 1105.1.8, all public entrances that are required to be accessible shall have one door be either a full power-operated door or a low-energy power-operated door. Where the public entrance includes a vestibule, at least one door into and one door out of the vestibule shall meet the requirements of this section.

[W] TABLE 1105.1.8[a]
PUBLIC ENTRANCE WITH POWER-OPERATED DOOR

OCCUPANCY	BUILDING OCCUPANT LOAD GREATER THAN
A-1, A-2, A-3, A-4	300
B, M, R-1	500

a. In mixed-use facilities containing occupancies listed, when the total sum of the occupant load is greater than those listed, the most restrictive building occupant load shall apply.

SECTION 1106
PARKING AND PASSENGER LOADING FACILITIES

1106.1 Required. Where parking is provided, *accessible* parking spaces shall be provided in compliance with Table 1106.1, except as required by Sections 1106.2 through 1106.4. Where more than one parking facility is provided on a *site*, the number of parking spaces required to be *accessible* shall be calculated separately for each parking facility.

Exception: This section does not apply to parking spaces used exclusively for buses, trucks, other delivery vehicles, law enforcement vehicles or vehicular impound and motor pools where lots accessed by the public are provided with an *accessible* passenger loading zone.

TABLE 1106.1
ACCESSIBLE PARKING SPACES

TOTAL PARKING SPACES PROVIDED IN PARKING FACILITIES	REQUIRED MINIMUM NUMBER OF ACCESSIBLE SPACES
1 to 25	1
26 to 50	2
51 to 75	3
76 to 100	4
101 to 150	5
151 to 200	6
201 to 300	7
301 to 400	8
401 to 500	9
501 to 1,000	2% of total
1,001 and over	20, plus one for each 100, or fraction thereof, over 1,000

[S] 1106.2 Groups I-1, R-1, R-2, and R-3. ((~~and R-4.~~)) *Accessible* parking spaces shall be provided in Group I-1, R-1, R-2, and R-3 ((~~and R-4~~)) occupancies in accordance with Items 1 through 4 as applicable.

1. In Group R-2 ((~~,~~)) and R-3 ((~~and R-4~~)) occupancies that are required to have *Accessible*, *Type A* or *Type B dwelling units* or *sleeping units*, at least 2 percent, but not less than one, of each type of parking space provided shall be *accessible*.
2. In Group I-1 and R-1 occupancies, *accessible* parking shall be provided in accordance with Table 1106.1.
3. Where at least one parking space is provided for each *dwelling unit* or *sleeping unit*, at least one *accessible* parking space shall be provided for each *Accessible* and *Type A unit*.
4. Where parking is provided within or beneath a building, *accessible* parking spaces shall be provided within or beneath the building.

DRAFT

1106.3 Hospital outpatient facilities. At least 10 percent, but not less than one, of care recipient and visitor parking spaces provided to serve hospital outpatient facilities shall be *accessible*.

1106.4 Rehabilitation facilities and outpatient physical therapy facilities. At least 20 percent, but not less than one, of the portion of care recipient and visitor parking spaces serving rehabilitation facilities specializing in treating conditions that affect mobility and outpatient physical therapy facilities shall be *accessible*.

1106.5 Van spaces. For every six or fraction of six *accessible* parking spaces, at least one shall be a van-accessible parking space.

Exception: In Group U *private garages* that serve Group R-2 and R-3 occupancies, van-accessible spaces shall be permitted to have vehicular routes, entrances, parking spaces and access aisles with a minimum vertical clearance of 7 feet (2134 mm).

[W] 1106.6 Location. *Accessible* parking spaces shall be located on the shortest *accessible route* of travel from adjacent parking to an *accessible* building entrance. In parking facilities that do not serve a particular building, *accessible* parking spaces shall be located on the shortest route to an *accessible* pedestrian entrance to the parking facility. Where buildings have multiple *accessible* entrances with adjacent parking, *accessible* parking spaces shall be dispersed and located near the *accessible* entrances. Wherever practical, the *accessible route* shall not cross lanes of vehicular traffic. Where crossing traffic lanes is necessary, the route shall be designated and marked as a crosswalk.

Exceptions:

1. In multilevel parking structures, van-accessible parking spaces are permitted on one level.
2. *Accessible* parking spaces shall be permitted to be located in different parking facilities if substantially equivalent or greater accessibility is provided in terms of distance from an *accessible* entrance or entrances, parking fee and user convenience.

1106.7 Passenger loading zones. Passenger loading zones shall be *accessible*.

1106.7.1 Continuous loading zones. Where passenger loading zones are provided, one passenger loading zone in every continuous 100 linear feet (30.4 m) maximum of loading zone space shall be *accessible*.

1106.7.2 Medical facilities. A passenger loading zone shall be provided at an *accessible* entrance to licensed medical and long-term care facilities where people receive physical or medical treatment or care and where the period of stay exceeds 24 hours.

1106.7.3 Valet parking. A passenger loading zone shall be provided at valet parking services.

1106.7.4 Mechanical access parking garages. Mechanical access parking garages shall provide at least one passenger loading zone at vehicle drop-off and vehicle pick-up areas.

DRAFT

[S] SECTION 1107
DWELLING UNITS, ((~~AND~~)) SLEEPING UNITS AND TRANSIENT LODGING FACILITIES

1107.1 General. In addition to the other requirements of this chapter, occupancies having *dwelling units* or *sleeping units* shall be provided with *accessible* features in accordance with this section.

1107.2 Design. *Dwelling units* and *sleeping units* that are required to be *Accessible units*, *Type A units* and *Type B units* shall comply with the applicable portions of Chapter 10 of ICC A117.1. Units required to be *Type A units* are permitted to be designed and constructed as *Accessible units*. Units required to be *Type B units* are permitted to be designed and constructed as *Accessible units* or as *Type A units*.

1107.3 Accessible spaces. Rooms and spaces available to the general public or available for use by residents and serving *Accessible units*, *Type A units* or *Type B units* shall be *accessible*. *Accessible* spaces shall include toilet and bathing rooms, kitchen, living and dining areas and any exterior spaces, including patios, terraces and balconies.

Exceptions:

1. *Stories* and *mezzanines* exempted by Section 1107.4.
2. Recreational facilities in accordance with Section 1110.2.
3. Exterior decks, patios or balconies that are part of *Type B units* and have impervious surfaces, and that are not more than 4 inches (102 mm) below the finished floor level of the adjacent interior space of the unit.

1107.4 Accessible route. Not fewer than one *accessible route* shall connect *accessible* building or facility entrances with the primary entrance of each *Accessible unit*, *Type A unit* and *Type B unit* within the building or facility and with those exterior and interior spaces and facilities that serve the units.

Exceptions:

1. If due to circumstances outside the control of the owner, either the slope of the finished ground level between *accessible* facilities and buildings exceeds one unit vertical in 12 units horizontal (1:12), or where physical barriers or legal restrictions prevent the installation of an *accessible route*, a vehicular route with parking that complies with Section 1106 at each *public* or *common use* facility or building is permitted in place of the *accessible route*.
2. In Group I-3 facilities, an *accessible route* is not required to connect *stories* or *mezzanines* where *Accessible units*, all *common use* areas serving *Accessible units* and all *public use* areas are on an *accessible* route.
3. In Group R-2 facilities with *Type A units* complying with Section 1107.6.2.2.1, an *accessible route* is not required to connect *stories* or *mezzanines* where *Type A units*, all *common use* areas serving *Type A units* and all public use areas are on an *accessible route*.
4. In other than Group R-2 dormitory housing provided by places of education, in Group R-2 facilities with *Accessible units* complying with Section 1107.6.2.3.1, an *accessible route* is not required to connect *stories* or *mezzanines* where *Accessible units*, all *common use* areas serving *Accessible units* and all *public use* areas are on an *accessible* route.
5. In Group R-1, an *accessible route* is not required to connect *stories* or *mezzanines* within individual units, provided the *accessible* level meets the provisions for *Accessible units* and sleeping accommodations for two persons minimum and a toilet facility are provided on that level.
6. In congregate residences in Groups R-3 and R-4, an *accessible route* is not required to connect *stories* or *mezzanines* where *Accessible units* or *Type B units*, all *common use* areas serving *Accessible units* and *Type B units* and all *public use* areas serving *Accessible units* and *Type B units* are on an *accessible route*.
7. An *accessible route* between *stories* is not required where *Type B units* are exempted by Section 1107.7.

[W] 1107.5 Group I. *Accessible units* and *Type B units* shall be provided in Group I occupancies in accordance with Sections 1107.5.1 through 1107.5.5.

1107.5.1 Group I-1. *Accessible units* and *Type B units* shall be provided in Group I-1 occupancies in accordance with Sections 1107.5.1.1 and ((~~1107.5.1.2~~)) 1107.5.1.3.

1107.5.1.1 Accessible units in Group I-1, Condition 1. In Group I-1, Condition 1, at least 4 percent, but not less than one, of the *dwelling units* and *sleeping units* shall be *Accessible units*.

EXCEPTIONS:

1. In not more than 50 percent of the accessible units, water closets shall not be required to comply with ICC A117.1 where such water closets comply with Section 1109.2.2.
2. In not more than 50 percent of the accessible units, roll-in-type showers shall not be required to comply with ICC A117.1 where roll in- type showers comply with Section 1109.2.3.

1107.5.1.2 Accessible units in Group I-1, Condition 2. In Group I-1, Condition 2, at least 10 percent, but not less than one, of the *dwelling units* and *sleeping units* shall be *Accessible units*.

EXCEPTIONS:

1. In not more than 50 percent of the accessible units, water closets shall not be required to comply with ICC A117.1 where such water closets comply with Section 1109.2.2.
2. In not more than 50 percent of the accessible units, roll-in-type showers shall not be required to comply with ICC A117.1 where roll-in-type showers comply with Section 1109.2.3.

((~~1107.5.1.2~~)) 1107.5.1.3 Type B units. In structures with four or more *dwelling units* or *sleeping units intended to be occupied as a residence*, every *dwelling unit* and *sleeping unit intended to be occupied as a residence* shall be a *Type B unit*.

Exception: The number of *Type B units* is permitted to be reduced in accordance with Section 1107.7.

1107.5.2 Group I-2 nursing homes. *Accessible units* and *Type B units* shall be provided in nursing homes of Group I-2 occupancies in accordance with Sections 1107.5.2.1 and 1107.5.2.2.

1107.5.2.1 Accessible units. At least 50 percent but not less than one of each type of the *dwelling units* and *sleeping units* shall be *Accessible units*.

EXCEPTIONS:

1. In not more than 90 percent of the accessible units, water closets shall not be required to comply with ICC A117.1 where such water closets comply with Section 1109.2.2.
2. In not more than 90 percent of the accessible units, roll-in-type showers shall not be required to comply with ICC A117.1 where roll-in-type showers comply with Section 1109.2.3.

1107.5.2.2 Type B units. In structures with four or more *dwelling units* or *sleeping units intended to be occupied as a residence*, every *dwelling unit* and *sleeping unit intended to be occupied as a residence* shall be a *Type B unit*.

DRAFT

Exception: The number of *Type B units* is permitted to be reduced in accordance with Section 1107.7.

1107.5.3 Group I-2 hospitals. *Accessible units* and *Type B units* shall be provided in general-purpose hospitals, psychiatric facilities and detoxification facilities of Group I-2 occupancies in accordance with Sections 1107.5.3.1 and 1107.5.3.2.

1107.5.3.1 Accessible units. At least 10 percent, but not less than one, of the *dwelling units* and *sleeping units* shall be *Accessible units*.

Exception: Entry doors to *Accessible dwelling units* or *sleeping units* shall not be required to provide the maneuvering clearance beyond the latch side of the door.

1107.5.3.2 Type B units. In structures with four or more *dwelling units* or *sleeping unit*s *intended to be occupied as a residence*, every *dwelling unit* and *sleeping unit intended to be occupied as a residence* shall be a *Type B unit*.

Exception: The number of *Type B units* is permitted to be reduced in accordance with Section 1107.7.

1107.5.4 Group I-2 rehabilitation facilities. In hospitals and rehabilitation facilities of Group I-2 occupancies that specialize in treating conditions that affect mobility, or units within either that specialize in treating conditions that affect mobility, 100 percent of the *dwelling units* and *sleeping unit*s shall be *Accessible units*.

EXCEPTIONS:

1. In not more than 50 percent of the accessible units, water closets shall not be required to comply with ICC A117.1 where such water closets comply with Section 1109.2.2.
2. In not more than 50 percent of the accessible units, roll-in-type showers shall not be required to comply with ICC A117.1 where roll-in-type showers comply with Section 1109.2.3.

1107.5.5 Group I-3. *Accessible units* shall be provided in Group I-3 occupancies in accordance with Sections 1107.5.5.1 through 1107.5.5.3.

1107.5.5.1 Group I-3 sleeping units. In Group I-3 occupancies, at least 3 percent of the total number of *sleeping units* in the facility, but not less than one unit in each classification level, shall be *Accessible units*.

1107.5.5.2 Special holding cells and special housing cells or rooms. In addition to the *Accessible units* required by Section 1107.5.5.1, where special holding cells or special housing cells or rooms are provided, at least one serving each purpose shall be an *Accessible unit*. Cells or rooms subject to this requirement include, but are not limited to, those used for purposes of orientation, protective custody, administrative or disciplinary detention or segregation, detoxification and medical isolation.

Exception: Cells or rooms specially designed without protrusions and that are used solely for purposes of suicide prevention shall not be required to include grab bars.

1107.5.5.3 Medical care facilities. Patient *sleeping unit*s or cells required to be *Accessible units* in medical care facilities shall be provided in addition to any medical isolation cells required to comply with Section 1107.5.5.2.

1107.6 Group R. *Accessible units*, *Type A units* and *Type B units* shall be provided in Group R occupancies in accordance with Sections 1107.6.1 through 1107.6.4.

1107.6.1 Group R-1. *Accessible units* and *Type B units* shall be provided in Group R-1 occupancies in accordance with Sections 1107.6.1.1 and 1107.6.1.2.

1107.6.1.1 Accessible units. *Accessible dwelling units* and *sleeping units* shall be provided in accordance with Table 1107.6.1.1. On a multiple-building site, where structures contain more than 50 *dwelling units* or *sleeping units*, the number of *Accessible units* shall be determined per structure. On a multiple-building site, where structures contain 50 or fewer *dwelling units* or *sleeping units*, all *dwelling units* and *sleeping units* on a *site* shall be considered to determine the total number of *Accessible units*. *Accessible units* shall be dispersed among the various classes of units.

DRAFT

TABLE 1107.6.1.1
ACCESSIBLE DWELLING UNITS AND SLEEPING UNITS

TOTAL NUMBER OF UNITS PROVIDED	MINIMUM REQUIRED NUMBER OF ACCESSIBLE UNITS WITHOUT ROLL-IN SHOWERS	MINIMUM REQUIRED NUMBER OF ACCESSIBLE UNITS WITH ROLL-IN SHOWERS	TOTAL NUMBER OF REQUIRED ACCESSIBLE UNITS
1 to 25	1	0	1
26 to 50	2	0	2
51 to 75	3	1	4
76 to 100	4	1	5
101 to 150	5	2	7
151 to 200	6	2	8
201 to 300	7	3	10
301 to 400	8	4	12
401 to 500	9	4	13
501 to 1,000	2% of total	1% of total	3% of total
Over 1,000	20, plus 1 for each 100, or fraction thereof, over 1,000	10 plus 1 for each 100, or fraction thereof, over 1,000	30 plus 2 for each 100, or fraction thereof, over 1,000

1107.6.1.2 Type B units. In structures with four or more *dwelling units* or *sleeping units intended to be occupied as a residence*, every *dwelling unit* and *sleeping unit intended to be occupied as a residence* shall be a *Type B unit*.

Exception: The number of *Type B units* is permitted to be reduced in accordance with Section 1107.7.

1107.6.2 Group R-2. *Accessible units*, *Type A units* and *Type B units* shall be provided in Group R-2 occupancies in accordance with Sections 1107.6.2.1 through 1107.6.2.3.

1107.6.2.1 Live/work units. In *live/work units* constructed in accordance with Section 419, the nonresidential portion is required to be *accessible*. In a structure where there are four or more *live/work units intended to be occupied as a residence*, the residential portion of the *live/work unit* shall be a *Type B unit.*

Exception: The number of *Type B units* is permitted to be reduced in accordance with Section 1107.7.

1107.6.2.2 Apartment houses, monasteries and convents. *Type A units* and *Type B units* shall be provided in apartment houses, monasteries and convents in accordance with Sections 1107.6.2.2.1 and 1107.6.2.2.2. Bedrooms in monasteries and convents shall be counted as units for the purpose of determining the number of units. Where the bedrooms are grouped in *sleeping units*, only one bedroom in each *sleeping unit* shall count toward the number of required Type A units.

[W] 1107.6.2.2.1 Type A units. In Group R-2 occupancies containing more than ((~~20~~)) 10 *dwelling units* or *sleeping units*, at least ((~~2~~)) 5 percent, but not less than one, of the units shall be a *Type A unit.* All ((~~Group R-2~~)) units on a *site* shall be considered to determine the total number of units and the required number of *Type A units. Type A units* shall be dispersed among the various classes of units, as described in Section 1107.6. Bedrooms in monasteries and convents shall be counted as *sleeping units* for the purpose of determining the number of units. Where the *sleeping units* are grouped into suites, only one *sleeping unit* in each suite shall count towards the number of required *Type A units*.

Exceptions:

1. The number of *Type A units* is permitted to be reduced in accordance with Section 1107.7.
2. *Existing structures* on a *site* shall not contribute to the total number of units on a *site*.

1107.6.2.2.2 Type B units. Where there are four or more *dwelling units* or *sleeping units intended to be occupied as a residence* in a single structure, every *dwelling unit* and *sleeping unit intended to be occupied as a residence* shall be a *Type B unit*.

Exception: The number of *Type B units* is permitted to be reduced in accordance with Section 1107.7.

[W] 1107.6.2.3 Group R-2 other than live/work units, apartment houses, monasteries and convents. In Group R-2 occupancies, other than *live/work units*, apartment houses, monasteries and convents falling within the scope of Sections 1107.6.2.1 and 1107.6.2.2, *Accessible units* and *Type B units* shall be provided in accordance with Sections 1107.6.2.3.1 and 1107.6.2.3.2. Bedrooms within congregate living facilities, dormitories, sororities, fraternities and boarding houses shall be counted as *sleeping units* for the purpose of determining the number of units. Where the *bedrooms* are grouped into *dwelling* or *sleeping units*, only one *bedroom* in each *dwelling* or *sleeping unit* shall be permitted to count toward the number of required *Accessible units*. *Accessible units* shall be dispersed among the various classes of units, as described in Section 1107.6.

DRAFT

1107.6.2.3.1 Accessible units. *Accessible dwelling units* and *sleeping unit*s shall be provided in accordance with Table 1107.6.1.1.

1107.6.2.3.2 Type B units. Where there are four or more *dwelling units* or *sleeping unit*s *intended to be occupied as a residence* in a single structure, every *dwelling unit* and every *sleeping unit intended to be occupied as a residence* shall be a *Type B unit*.

Exception: The number of *Type B units* is permitted to be reduced in accordance with Section 1107.7.

1107.6.3 Group R-3. In Group R-3 occupancies where there are four or more *dwelling units* or *sleeping units intended to be occupied as a residence* in a single structure, every *dwelling unit* and *sleeping unit intended to be occupied as a residence* shall be a *Type B unit*. Bedrooms within congregate living facilities, dormitories, sororities, fraternities, and boarding houses shall be counted as *sleeping units* for the purpose of determining the number of units.

Exception: The number of *Type B units* is permitted to be reduced in accordance with Section 1107.7.

[S] ((~~1107.6.4 Group R-4.~~ ~~*Accessible units* and *Type B units* shall be provided in Group R-4 occupancies in accordance with Sections 1107.6.4.1 and 1107.6.4.2. Bedrooms in Group R-4 facilities shall be counted as *sleeping units* for the purpose of determining the number of units.~~

~~**1107.6.4.1 Accessible units.** In Group R-4, Condition 1, at least one of the *sleeping units* shall be an *Accessible unit*. In Group R-4, Condition 2, at least two of the *sleeping units* shall be an *Accessible unit*.~~

~~**1107.6.4.2 Type B units.** In structures with four or more *sleeping units intended to be occupied as a residence*, every *sleeping unit intended to be occupied as a residence* shall be a *Type B unit*.~~

~~**Exception:** The number of *Type B units* is permitted to be reduced in accordance with Section 1107.7.~~))

1107.7 General exceptions. Where specifically permitted by Section 1107.5 or 1107.6, the required number of *Type A units* and *Type B units* is permitted to be reduced in accordance with Sections 1107.7.1 through 1107.7.5.

1107.7.1 Structures without elevator service. Where elevator service is not provided in a structure, only the *dwelling units* and *sleeping units* that are located on stories indicated in Sections 1107.7.1.1 and 1107.7.1.2 are required to be *Type A units* and *Type B units*, respectively. The number of *Type A units* shall be determined in accordance with Section 1107.6.2.2.1.

1107.7.1.1 One story with Type B units required. At least one *story* containing *dwelling units* or *sleeping unit*s *intended to be occupied as a residence* shall be provided with an *accessible* entrance from the exterior of the structure and all units *intended to be occupied as a residence* on that *story* shall be *Type B units*.

1107.7.1.2 Additional stories with Type B units. Where stories have entrances not included in determining compliance with Section 1107.7.1.1, and such entrances are proximate to arrival points intended to serve units on that *story*, as indicated in Items 1 and 2, all *dwelling units* and *sleeping unit*s *intended to be occupied as a residence* served by that entrance on that *story* shall be *Type B units*.

1. Where the slopes of the undisturbed *site* measured between the planned entrance and all vehicular or pedestrian arrival points within 50 feet (15 240 mm) of the planned entrance are 10 percent or less.
2. Where the slopes of the planned finished grade measured between the entrance and all vehicular or pedestrian arrival points within 50 feet (15 240 mm) of the planned entrance are 10 percent or less.

Where arrival points are not within 50 feet (15 240 mm) of the entrance, the closest arrival point shall be used to determine access unless that arrival point serves the *story* required by Section 1107.7.1.1.

1107.7.2 Multistory units. A *multistory dwelling unit* or *sleeping unit* that is not provided with elevator service is not required to be a *Type B unit*. Where a *multistory unit* is provided with external elevator service to only one floor, the floor provided with elevator service shall be the primary entry to the unit, shall comply with the requirements for a *Type B unit* and, where provided within the unit, a living area, a kitchen and a toilet facility shall be provided on that floor.

1107.7.3 Elevator service to the lowest story with units. Where elevator service in the building provides an *accessible route* only to the lowest *story* containing *dwelling units* or *sleeping unit*s *intended to be occupied as a residence*, only the units on that *story* that are *intended to be occupied as a residence* are required to be *Type B units*.

1107.7.4 Site impracticality. On a *site* with multiple nonelevator buildings, the number of units required by Section 1107.7.1 to be *Type B units* is permitted to be reduced to a percentage that is equal to the percentage of the entire *site* having grades, prior to development, that are less than 10 percent, provided that all of the following conditions are met:

1. Not less than 20 percent of the units required by Section 1107.7.1 on the *site* are *Type B units*.
2. Units required by Section 1107.7.1, where the slope between the building entrance serving the units on that *story* and a pedestrian or vehicular arrival point is not greater than 8.33 percent, are *Type B units*.
3. Units required by Section 1107.7.1, where an elevated walkway is planned between a building entrance serving the units on that *story* and a pedestrian or vehicular arrival point and the slope between them is 10 percent or less, are *Type B units*.

DRAFT

4. Units served by an elevator in accordance with Section 1107.7.3 are *Type B units*.

1107.7.5 Design flood elevation. The required number of *Type A units* and *Type B units* shall not apply to a *site* where the required elevation of the lowest floor or the lowest horizontal structural building members of nonelevator buildings are at or above the *design flood elevation* resulting in all of the following:

1. A difference in elevation between the minimum required floor elevation at the primary entrances and vehicular and pedestrian arrival points within 50 feet (15 240 mm) exceeding 30 inches (762 mm).
2. A slope exceeding 10 percent between the minimum required floor elevation at the primary entrances and vehicular and pedestrian arrival points within 50 feet (15 240 mm).

Where such arrival points are not within 50 feet (15 240 mm) of the primary entrances, the closest arrival points shall be used.

[S] 1107.8 Communication features. Accessible communication features shall be provided in accordance with Sections 1107.8.1 through 1107.8.4.

1107.8.1 Transient lodging. In *transient lodging* facilities, sleeping units with accessible communication features shall be provided in accordance with Table 1107.8. Units required to comply with Table 1107.8 shall be dispersed among the various classes of units.

[S] TABLE 1107.8
DWELLING OR SLEEPING UNITS WITH ACCESSIBLE COMMUNICATION FEATURES

TOTAL NUMBER OF DWELLING OR SLEEPING UNITS PROVIDED	MINIMUM REQUIRED NUMBER OF DWELLING OR SLEEPING UNITS WITH ACCESSIBLE COMMUNICATION FEATURES
1	1
2 to 25	2
26 to 50	4
51 to 75	7
76 to 100	9
101 to 150	12
151 to 200	14
201 to 300	17
301 to 400	20
401 to 500	22
501 to 1,000	5% of total
1,001 and over	50 plus 3 for each 100 over 1,000

DRAFT

1107.8.2 Group I-3. In Group I-3 occupancies at least 2 percent, but no fewer than one of the total number of general holding cells and general housing cells equipped with audible emergency alarm systems and permanently installed telephones within the cell, shall comply with Section 1107.8.4.

1107.8.3 Dwelling units and sleeping units. Where *dwelling units* and *sleeping units* are altered or added, the requirements of Section 1107.8 shall apply only to the units being altered or added until the number of units with accessible communication features complies with the minimum number required for new construction.

1107.8.4 Notification devices. Visual notification devices shall be provided to alert room occupants of incoming telephone calls and a door knock or bell. Notification devices shall not be connected to visual alarm signal appliances. Permanently installed telephones shall have volume controls and an electrical outlet complying with ICC 117.1 located within 48 inches (1219 mm) of the telephone to facilitate the use of a TTY.

SECTION 1108
SPECIAL OCCUPANCIES

1108.1 General. In addition to the other requirements of this chapter, the requirements of Sections 1108.2 through 1108.4 shall apply to specific occupancies.

1108.2 Assembly area seating. A building, room or space used for assembly purposes with *fixed seating* shall comply with Sections 1108.2.1 through 1108.2.5. Lawn seating shall comply with Section 1108.2.6. Assistive listening systems shall comply with Section 1108.2.7. Performance areas viewed from assembly seating areas shall comply with Section 1108.2.8. Dining areas shall comply with Section 1108.2.9.

1108.2.1 Services. If a service or facility is provided in an area that is not *accessible*, the same service or facility shall be provided on an *accessible* level and shall be *accessible*.

1108.4.1.2 Gallery seating. *Wheelchair spaces* shall be provided in accordance with Table 1108.2.2.1. Designated aisle seats shall be provided in accordance with Section 1108.2.5.

1108.4.1.3 Assistive listening systems. An assistive listening system must be provided. Receivers shall be provided for the assistive listening system in accordance with Section 1108.2.7.1.

1108.4.1.4 Employee work stations. The judge's bench, clerk's station, bailiff's station, deputy clerk's station and court reporter's station shall be located on an accessible route. The vertical access to elevated employee work stations within a courtroom is not required at the time of initial construction, provided a *ramp*, lift or elevator can be installed without requiring reconfiguration or extension of the courtroom or extension of the electrical system.

1108.4.1.5 Other work stations. The litigant's and counsel stations, including the lectern, shall be *accessible*.

1108.4.2 Holding cells. Central holding cells and court-floor holding cells shall comply with Sections 1108.4.2.1 and 1108.4.2.2.

1108.4.2.1 Central holding cells. Where separate central holding cells are provided for adult males, juvenile males, adult females or juvenile females, one of each type shall be *accessible*. Where central holding cells are provided and are not separated by age or sex, at least one *accessible* cell shall be provided.

1108.4.2.2 Court-floor holding cells. Where separate court-floor holding cells are provided for adult males, juvenile males, adult females or juvenile females, each courtroom shall be served by one *accessible* cell of each type. Where court-floor holding cells are provided and are not separated by age or sex, courtrooms shall be served by at least one *accessible* cell. *Accessible* cells shall be permitted to serve more than one courtroom.

SECTION 1109
OTHER FEATURES AND FACILITIES

1109.1 General. *Accessible* building features and facilities shall be provided in accordance with Sections 1109.2 through 1109.15.

Exception: *Accessible units*, *Type A units* and *Type B units* shall comply with Chapter 10 of ICC A117.1.

[W] 1109.2 Toilet and bathing facilities. Each toilet room and bathing room shall be *accessible*. Where a floor level is not required to be connected by an *accessible route*, the only toilet rooms or bathing rooms provided within the facility shall not be located on the inaccessible floor. Except as provided for in Sections ((~~1109.2.2 and~~)) 1109.2.3, 1109.2.4, and 1109.2.5 at least one of each type of fixture, element, control or dispenser in each accessible toilet room and bathing room shall be *accessible.*

Exceptions:

1. Toilet rooms or bathing rooms accessed only through a private office, not for *common* or *public use* and intended for use by a single occupant, shall be permitted to comply with the specific exceptions in ICC A117.1.
2. This section is not applicable to toilet and bathing rooms that serve *dwelling units* or *sleeping units* that are not required to be *accessible* by Section 1107.
3. Where multiple single-user toilet rooms or bathing rooms are clustered at a single location, at least 50 percent but not less than one room for each use at each cluster shall be *accessible*. Where these rooms are designated as gender-neutral, the total number of accessible toilet or bathing rooms shall not be less than the sum of required accessible separate male plus female rooms.
4. Where no more than one urinal is provided in a toilet room or bathing room, the urinal is not required to be *accessible*.
5. Toilet rooms or bathing rooms that are part of critical care or intensive care patient sleeping rooms serving *Accessible units* are not required to be *accessible*.
6. Toilet rooms or bathing rooms designed for bariatrics patients are not required to comply with the toilet room and bathing room requirement in ICC A117.1. The *sleeping units* served by bariatrics toilet or bathing rooms shall not count toward the required number of *Accessible sleeping units.*
7. Where permitted in Section 1107, in toilet rooms or bathrooms serving accessible units, water closets designed for assisted toileting shall comply with Section 1109.2.2.
8. Where permitted in Section 1107, in bathrooms serving accessible units, showers designed for assisted toileting shall comply with Section 1109.2.3.

((~~7~~)) 9. Where toilet facilities are primarily for children's use, required *accessible* water closets, toilet compartments and lavatories shall be permitted to comply with children's provision of ICC A117.1.

1109.2.1 Family or assisted-use toilet and bathing rooms. In assembly and mercantile occupancies, an *accessible* family or assisted-use toilet room shall be provided where an aggregate of six or more male and female water closets is required. In buildings of mixed occupancy, only those water closets required for the assembly or mercantile occupancy shall be used to

DRAFT

determine the family or assisted-use toilet room requirement. In recreational facilities where separate-sex bathing rooms are provided, an *accessible* family or assisted-use bathing room shall be provided. Fixtures located within family or assisted-use toilet and bathing rooms shall be included in determining the number of fixtures provided in an occupancy.

Exception: Where each separate-sex bathing room has only one shower or bathtub fixture, a family or assisted-use bathing room is not required.

1109.2.1.1 Standard. Family or assisted-use toilet and bathing rooms shall comply with Sections 1109.2.1.2 through 1109.2.1.7.

1109.2.1.2 Family or assisted-use toilet rooms. Family or assisted-use toilet rooms shall include only one water closet and only one lavatory. A family or assisted-use bathing room in accordance with Section 1109.2.1.3 shall be considered to be a family or assisted-use toilet room.

Exception: The following additional fixtures shall be permitted in a family or assisted-use toilet room:

1. A urinal.
2. A child-height water closet.
3. A child-height lavatory.

1109.2.1.3 Family or assisted-use bathing rooms. Family or assisted-use bathing rooms shall include only one shower or bathtub fixture. Family or assisted-use bathing rooms shall also include one water closet and one lavatory. Where storage facilities are provided for separate-sex bathing rooms, *accessible* storage facilities shall be provided for family or assisted-use bathing rooms.

1109.2.1.4 Location. Family or assisted-use toilet and bathing rooms shall be located on an *accessible route*. Family or assisted-use toilet rooms shall be located not more than one *story* above or below separate-sex toilet rooms. The *accessible route* from any separate-sex toilet room to a family or assisted-use toilet room shall not exceed 500 feet (152 m).

1109.2.1.5 Prohibited location. In passenger transportation facilities and airports, the *accessible route* from separate-sex toilet rooms to a family or assisted-use toilet room shall not pass through security checkpoints.

1109.2.1.6 Clear floor space. Where doors swing into a family or assisted-use toilet or bathing room, a clear floor space not less than 30 inches by 48 inches (762 mm by 1219 mm) shall be provided, within the room, beyond the area of the door swing.

1109.2.1.7 Privacy. Doors to family or assisted-use toilet and bathing rooms shall be securable from within the room.

[W] 1109.2.2 Water closet compartment. ((~~Where water closet compartments are provided in a toilet room or bathing room, at least 5 percent of the total number of compartments shall be wheelchair *accessible*. Where the combined total water closet compartments and urinals provided in a toilet room or bathing room is six or more, at least 5 percent of the total number of compartments shall be ambulatory *accessible*, provided in addition to the wheelchair *accessible* compartment.~~)) Water closets designed for assisted toileting shall comply with Sections 1109.2.2.1 through 1109.2.2.6.

1109.2.2.1 Location. The centerline of the water closet shall be 24 inches (610 mm) minimum and 26 inches (660 mm) maximum from one side of the required clearance.

1109.2.2.2 Clearance. Clearance around the water closet shall comply with Sections 1109.2.2.2.1 through 1109.2.2.2.3.

1109.2.2.2.1 Clearance width. Clearance around a water closet shall be 66 inches (1675 mm) minimum in width, measured perpendicular from the side of the clearance that is 24 inches (610 mm) minimum and 26 inches (660 mm) maximum from the water closet centerline.

1109.2.2.2.2 Clearance depth. Clearance around the water closet shall be 78 inches (1980 mm) minimum in depth, measured perpendicular from the rear wall.

1109.2.2.2.3 Clearance overlap. The required clearance around the water closet shall be permitted overlaps per ICC A117.1 Section 604.3.3.

1109.2.2.3 Height. The height of the water closet seats shall comply with ICC A117.1 Section 604.4.

1109.2.2.4 Swing-up grab bars. The swing-up grab bars shall comply with ICC A117.1 Sections 609.2 and 609.8. Swing-up grab bars shall be provided on both sides of the water closet and shall comply with all of the following: the following:

1. The centerline of the grab bar shall be 14 inches minimum to 16 inches (356 mm to 405 mm) maximum from the centerline of the water closet.
2. The length of the grab bar is 36 inches (915 mm) minimum in length, measured from the rear wall to the end of the grab bar.
3. The top of the grab bar in the down position is 30 inches (760 mm) minimum and 34 inches (865 mm) maximum above the floor.

1109.2.2.5 Flush controls. Flush controls shall comply with ICC A117.1 Section 604.6.

DRAFT

1109.2.2.6 Dispensers. Toilet paper dispensers shall be mounted on at least one of the swing-up grab bars and the outlet of the dispenser shall be located at 24 inches (610 mm) minimum to 36 inches (915 mm) maximum from the rear wall.

[W] 1109.2.3 Standard roll-in-type shower compartment designed for assisted bathing. Standard roll-in-type shower compartments designed for assisted bathing shall comply with Sections 1109.2.3.1 through 1109.2.3.8.

1109.2.3.1 Size. Standard roll-in-type shower compartments shall have a clear inside dimension of 60 inches (1525 mm) minimum in width and 30 inches (760 mm) minimum in depth, measured at the center point of opposing sides. An entry 60 inches (1525 mm) minimum in width shall be provided.

1109.2.3.2 Clearance. A clearance of 60 inches (1525 mm) minimum in length adjacent to the 60 inch (1525 mm) width of the open face of the shower compartment, and 30 inches (760 mm) minimum in depth, shall be provided.

EXCEPTIONS:

1. A lavatory complying with Section 606 shall be permitted at one end of the clearance.
2. Where the shower compartment exceeds minimum sizes, the clear floor space shall be placed adjacent to the grab bars and 30 inches minimum from the back wall.

1109.2.3.3 Grab bars. Grab bars shall comply with ICC A117.1 Section 609 and shall be provided in accordance with Sections 1109.2.3.3.1 and 1109.2.3.3.2. In standard roll-in-type shower compartments, grab bars shall be provided on three walls. Where multiple grab bars are used, required horizontal grab bars shall be installed at the same height above the floor. Grab bars can be separate bars or one continuous bar.

1109.2.3.3.1 Back-wall grab bar. The back-wall grab bar shall extend the length of the back wall and extend within 6 inches (150 mm) maximum from the two adjacent side walls.

EXCEPTION: The back wall grab bar shall not be required to exceed 48 inches (1220 mm) in length. The rear grab bar shall be located with one end within 6 inches maximum of a side wall with a grab bar complying with Section 1109.2.3.3.2.

1109.2.3.3.2 Side-wall grab bars. The side-wall grab bars shall extend the length of the wall and extend within 6 inches (150 mm) maximum from the adjacent back wall.

EXCEPTIONS:

1. The side-wall grab bar shall not be required to exceed 30 inches (760 mm) in length. The side grab bar shall be located with one end within 6 inches maximum of the back wall with a grab bar complying with Section 1109.2.3.3.1.
2. Where the side walls are located 72 inches (1830 mm) or greater apart, a grab bar is not required on one of the side walls.

1109.2.3.3 Grab bars. Grab bars shall comply with ICC A117.1 Section 609 and shall be provided in accordance with Sections 1109.2.3.3.1 and 1109.2.3.3.2. In standard roll-in-type shower compartments, grab bars shall be provided on three walls. Where multiple grab bars are used, required horizontal grab bars shall be installed at the same height above the floor. Grab bars can be separate bars or one continuous bar.

1109.2.3.4 Seats. Wall-mounted folding seats shall not be installed.

1109.2.3.5 Controls and hand showers. In standard roll-in-type showers, the controls and hand shower shall be located 38 inches (965 mm) minimum and 48 inches (1220 mm) maximum above the shower floor. Controls shall be located to facilitate caregiver access.

1109.2.3.6 Hand showers. Hand showers shall comply with ICC A117.1 Section 608.5.

1109.2.3.7 Thresholds. Thresholds shall comply with ICC A117.1 Section 608.6.

1109.2.3.8 Shower enclosures. Shower compartment enclosures for shower compartments shall comply with ICC A117.1 Section 608.7.

1109.2.3.9 Water temperature. Water temperature shall comply with ICC A117.1 Section 608.8.

[W] ((~~1109.2.3~~)) 1109.2.4 Lavatories. Where lavatories are provided, at least 5 percent, but not less than one, shall be *accessible*. Where an *accessible* lavatory is located within the *accessible* water closet compartment at least one additional *accessible* lavatory shall be provided in the multicompartment toilet room outside the water closet compartment. Where the total lavatories provided in a toilet room or bathing facility is six or more, at least one lavatory with enhanced reach ranges shall be provided.

[S] 1109.2.5 Portable toilets and bathing rooms. Where multiple single-user portable toilet or bathing units are clustered at a single location, at least 5 percent, but not less than one toilet unit or bathing unit at each cluster, shall be accessible. Signs containing the International Symbol of Accessibility shall identify *accessible* portable toilets and bathing units.

Exception: Portable toilet units provided for use exclusively by construction personnel on a construction site.

DRAFT

1109.3 Sinks. Where sinks are provided, at least 5 percent but not less than one provided in *accessible* spaces shall be *accessible*.

Exception: Mop or service sinks are not required to be *accessible*.

1109.4 Kitchens and kitchenettes. Where kitchens and kitchenettes are provided in *accessible* spaces or rooms, they shall be *accessible*.

1109.5 Drinking fountains. Where drinking fountains are provided on an exterior site, on a floor or within a secured area, the drinking fountains shall be provided in accordance with Sections 1109.5.1 and 1109.5.2.

[W] 1109.5.1 Minimum number. Not fewer than two drinking fountains shall be provided. One drinking fountain shall comply with the requirements for people who use a wheelchair and one drinking fountain shall comply with the requirements for standing persons.

Exceptions:

1. A single drinking fountain with two separate spouts that complies with the requirements for people who use a wheelchair and standing persons shall be permitted to be substituted for two separate drinking fountains.
2. Where drinking fountains are primarily for children's use, drinking fountains for people using wheelchairs shall be permitted to comply with the children's provisions in ICC A117.1 and drinking fountains for standing children shall be permitted to provide the spout at 30 inches (762 mm) minimum above the floor.
3. In all occupancies that require more than two drinking fountains per floor or secured area, bottle filling stations shall be allowed to be substituted in accordance with Section 2902.5.4.

1109.5.2 More than the minimum number. Where more than the minimum number of drinking fountains specified in Section 1109.5.1 is provided, 50 percent of the total number of drinking fountains provided shall comply with the requirements for persons who use a wheelchair and 50 percent of the total number of drinking fountains provided shall comply with the requirements for standing persons.

Exceptions:

1. Where 50 percent of the drinking fountains yields a fraction, 50 percent shall be permitted to be rounded up or down, provided that the total number of drinking fountains complying with this section equals 100 percent of the drinking fountains.
2. Where drinking fountains are primarily for children's use, drinking fountains for people using wheelchairs shall be permitted to comply with the children's provisions in ICC A117.1 and drinking fountains for standing children shall be permitted to provide the spout at 30 inches (762 mm) minimum above the floor.

1109.6 Saunas and steam rooms. Where provided, saunas and steam rooms shall be *accessible*.

Exception: Where saunas or steam rooms are clustered at a single location, at least 5 percent of the saunas and steam rooms, but not less than one, of each type in each cluster shall be *accessible*.

1109.7 Elevators. Passenger elevators on an *accessible route* shall be *accessible* and comply with Chapter 30.

1109.8 Lifts. Platform (wheelchair) lifts are permitted to be a part of a required *accessible route* in new construction where indicated in Items 1 through 10. Platform (wheelchair) lifts shall be installed in accordance with ASME A18.1.

1. An *accessible route* to a performing area and speaker platforms.
2. An *accessible route* to *wheelchair spaces* required to comply with the *wheelchair space* dispersion requirements of Sections 1108.2.2 through 1108.2.6.
3. An *accessible route* to spaces that are not open to the general public with an *occupant load* of not more than five.
4. An *accessible route* within an individual *dwelling unit* or *sleeping unit* required to be an *Accessible unit*, *Type A unit* or *Type B unit*.
5. An *accessible route* to jury boxes and witness stands; raised courtroom stations including judges' benches, clerks' stations, bailiffs' stations, deputy clerks' stations and court reporters' stations; and to depressed areas such as the well of the court.
6. An *accessible route* to load and unload areas serving amusement rides.
7. An *accessible route* to play components or soft contained play structures.
8. An *accessible route* to team or player seating areas serving *areas of sport activity*.
9. An *accessible route* instead of gangways serving recreational boating facilities and fishing piers and platforms.
10. An *accessible route* where existing exterior *site* constraints make use of a *ramp* or elevator infeasible.

DRAFT

1109.13 Controls, operating mechanisms and hardware. Controls, operating mechanisms and hardware intended for operation by the occupant, including switches that control lighting and ventilation and electrical convenience outlets, in *accessible* spaces, along *accessible routes* or as parts of *accessible* elements shall be *accessible*.

Exceptions:

1. Operable parts that are intended for use only by service or maintenance personnel shall not be required to be *accessible*.
2. Electrical or communication receptacles serving a dedicated use shall not be required to be *accessible*.
3. Where two or more outlets are provided in a kitchen above a length of counter top that is uninterrupted by a sink or appliance, one outlet shall not be required to be *accessible*.
4. Floor electrical receptacles shall not be required to be *accessible*.
5. HVAC diffusers shall not be required to be *accessible*.
6. Except for light switches, where redundant controls are provided for a single element, one control in each space shall not be required to be *accessible*.
7. Access doors or gates in barrier walls and fences protecting pools, spas and hot tubs shall be permitted to comply with Section 1010.1.9.2.

1109.14 Fuel-dispensing systems. Fuel-dispensing systems shall be *accessible*.

1109.15 Gaming machines and gaming tables. At least two percent of the total, but not fewer than one, of each gaming machine type and gaming table type shall be *accessible*. Where multiple gaming areas occur, accessible gaming machines and gaming tables shall be distributed throughout.

[S] 1109.16 Laundry equipment. Where provided in spaces required to be *accessible*, washing machines and clothes dryers shall comply with this section.

1109.16.1 Washing machines. Where three or fewer washing machines are provided, at least one shall be accessible. Where more than three washing machines are provided, at least two shall be accessible.

1109.16.2 Clothes dryers. Where three or fewer clothes dryers are provided, at least one shall be accessible. Where more than three clothes dryers are provided, at least two shall be accessible.

[S] 1109.17 Gaming machines, depositories, vending machines, change machines and similar equipment. At least one of each type of depository, vending machine, change machine and similar equipment shall be accessible. Two percent of gaming machines shall be accessible and provided with a front approach. Accessible gaming machines shall be distributed throughout the different types of gaming machines provided.

Exception: Drive-up-only depositories are not required to comply with this section.

[S] 1109.18 Mailboxes. Where *mailboxes* are provided in an interior location, at least 5 percent, but not less than one, of each type shall be accessible. In residential and institutional facilities, where *mailboxes* are provided for each *dwelling unit* or *sleeping unit*, accessible *mailboxes* shall be provided for each unit required to be an *accessible unit*.

[S] 1109.19 Automatic teller machines and fare machines. Where automatic teller machines or self-service fare vending, collection or adjustment machines are provided, at least one machine of each type at each location where such machines are provided shall be *accessible*. Where bins are provided for envelopes, wastepaper or other purposes, at least one of each type shall be accessible.

[S] 1109.20 Two-way communication systems. Where two-way communication systems are provided to gain admittance to a building or facility or to restricted areas within a building or facility, the system shall be accessible.

SECTION 1110
RECREATIONAL FACILITIES

1110.1 General. Recreational facilities shall be provided with *accessible* features in accordance with Sections 1110.2 through 1110.4.

[S] 1110.2 Facilities serving Group R-2 ((~~,~~)) and R-3 ((~~and R-4~~)) occupancies. Recreational facilities that serve Group R-2 ((~~,~~)) and R-3 ((~~and Group R-4~~)) occupancies shall comply with Sections 1110.2.1 through 1110.2.3, as applicable.

1110.2.1 Facilities serving Accessible units. In Group R-2 ((~~and R-4~~)) occupancies where recreational facilities serve *Accessible units*, every recreational facility of each type serving *Accessible units* shall be *accessible*.

1110.2.2 Facilities serving Type A and Type B units in a single building. In Group R-2 ((~~,~~)) and R-3 ((~~and R-4~~)) occupancies where recreational facilities serve a single building containing *Type A units* or *Type B units*, 25 percent, but not less than one, of each type of recreational facility shall be *accessible*. Every recreational facility of each type on a site shall be considered to determine the total number of each type that is required to be *accessible*.

DRAFT

1110.2.3 Facilities serving Type A and Type B units in multiple buildings. In Group R-2 ((~~,~~)) and R-3 ((~~and R-4~~)) occupancies on a single site where multiple buildings containing *Type A units* or *Type B units* are served by recreational facilities, 25 percent, but not less than one, of each type of recreational facility serving each building shall be *accessible*. The total number of each type of recreational facility that is required to be *accessible* shall be determined by considering every recreational facility of each type serving each building on the site.

1110.3 Other occupancies. Recreational facilities not falling within the purview of Section 1110.2 shall be *accessible*.

1110.4 Recreational facilities. Recreational facilities shall be *accessible* and shall be on an *accessible route* to the extent specified in this section.

1110.4.1 Area of sport activity. Each *area of sport activity* shall be on an *accessible route* and shall not be required to be *accessible* except as provided for in Sections 1110.4.2 through 1110.4.15.

1110.4.2 Team or player seating. At least one wheelchair space shall be provided in team or player seating areas serving *areas of sport activity*.

Exception: Wheelchair spaces shall not be required in team or player seating areas serving bowling lanes that are not required to be *accessible* in accordance with Section 1110.4.3.

1110.4.3 Bowling lanes. An *accessible* route shall be provided to at least 5 percent, but not less than one, of each type of bowling lane.

1110.4.4 Court sports. In court sports, at least one *accessible* route shall directly connect both sides of the court.

1110.4.5 Raised boxing or wrestling rings. Raised boxing or wrestling rings are not required to be *accessible* or to be on an *accessible* route.

1110.4.6 Raised refereeing, judging and scoring areas. Raised structures used solely for refereeing, judging or scoring a sport are not required to be *accessible* or to be on an *accessible route*.

1110.4.7 Animal containment areas. Animal containment areas that are not within public-use areas are not required to be *accessible* or to be on an *accessible route*.

1110.4.8 Amusement rides. Amusement rides that move persons through a fixed course within a defined area shall comply with Sections 1110.4.8.1 through 1110.4.8.3.

Exception: Mobile or portable amusement rides shall not be required to be *accessible*.

1110.4.8.1 Load and unload areas. Load and unload areas serving amusement rides shall be *accessible* and be on an *accessible route*. Where load and unload areas have more than one loading or unloading position, at least one loading and unloading position shall be on an *accessible route*.

1110.4.8.2 Wheelchair spaces, ride seats designed for transfer and transfer devices. Where amusement rides are in the load and unload position, the following shall be on an *accessible route*.

1. The position serving a wheelchair space.
2. Amusement ride seats designed for transfer.
3. Transfer devices.

1110.4.8.3 Minimum number. Amusement rides shall provide at least one wheelchair space, amusement ride seat designed for transfer or transfer device.

Exceptions:

1. Amusement rides that are controlled or operated by the rider are not required to comply with this section.
2. Amusement rides designed primarily for children, where children are assisted on and off the ride by an adult, are not required to comply with this section.
3. Amusement rides that do not provide seats that are built-in or mechanically fastened shall not be required to comply with this section.

1110.4.9 Recreational boating facilities. Boat slips required to be *accessible* by Sections 1110.4.9.1 and 1110.4.9.2 and boarding piers at boat launch ramps required to be *accessible* by Section 1110.4.9.3 shall be on an *accessible route*.

1110.4.9.1 Boat slips. *Accessible* boat slips shall be provided in accordance with Table 1110.4.9.1. All units on the site shall be combined to determine the number of *accessible* boat slips required. Where the number of boat slips is not identified, each 40 feet (12 m) of boat slip edge provided along the perimeter of the pier shall be counted as one boat slip for the purpose of this section.

Exception: Boat slips not designed for embarking or disembarking are not required to be *accessible* or be on an *accessible route*.

DRAFT

SECTION 1111
SIGNAGE

[W][S] 1111.1 Signs. Required *accessible* elements shall be identified by the International Symbol of Accessibility at the following locations.

1. *Accessible* parking spaces required by Section 1106.1.

   Exception: Where the total number of parking spaces provided is four or less, identification of *accessible* parking spaces is not required.

2. *Accessible* parking spaces required by Section 1106.2.

   Exception: In Group I-1, R-2, and R-3 ((~~and R-4~~)) facilities, where parking spaces are assigned to specific *dwelling units* or *sleeping units*, identification of *accessible* parking spaces is not required.

3. *Accessible* passenger loading zones.
4. *Accessible* rooms where multiple single-user toilet or bathing rooms are clustered at a single location.
5. *Accessible* entrances where not all entrances are *accessible*.
6. *Accessible* check-out aisles where not all aisles are *accessible*. The sign, where provided, shall be above the check-out aisle in the same location as the checkout aisle number or type of check-out identification.
7. Family or assisted-use toilet and bathing rooms.
8. *Accessible* dressing, fitting and locker rooms where not all such rooms are *accessible*.
9. *Accessible* areas of refuge in accordance with Section 1009.9.
10. Exterior areas for assisted rescue in accordance with Section 1009.9.
11. In recreational facilities, lockers that are required to be *accessible* in accordance with Section 1109.9.

1111.2 Directional signage. Directional signage indicating the route to the nearest like *accessible* element shall be provided at the following locations. These directional signs shall include the International Symbol of Accessibility and sign characters shall meet the visual character requirements in accordance with ICC A117.1.

1. Inaccessible building entrances.
2. Inaccessible public toilets and bathing facilities.
3. Elevators not serving an *accessible route*.
4. At each separate-sex toilet and bathing room indicating the location of the nearest family/assisted use toilet or bathing room where provided in accordance with Section 1109.2.1.
5. At *exits* and *exit stairways* serving a required *accessible* space, but not providing an *approved* accessible *means of egress*, signage shall be provided in accordance with Section 1009.10.
6. Where drinking fountains for persons using wheelchairs and drinking fountains for standing persons are not located adjacent to each other, directional signage shall be provided indicating the location of the other drinking fountains.

[W][S] 1111.3 Other signs. Signage indicating special accessibility provisions shall be provided as shown.

1. Each assembly area required to comply with Section 1108.2.7 shall provide a sign notifying patrons of the availability of assistive listening systems. The sign shall comply with ICC A117.1 requirements for visual characters and include the International Symbol of Access for Hearing Loss.

   Exception: Where ticket offices or windows are provided, signs are not required at each assembly area provided that signs are displayed at each ticket office or window informing patrons of the availability of assistive listening systems.

2. At each door to an *area of refuge* providing direct access to a *stairway*, exterior area for assisted rescue, exit *stairway*, *exit passageway* or *exit discharge*, signage shall be provided in accordance with Section 1013.4.
3. At *areas of refuge*, signage shall be provided in accordance with Section 1009.11.
4. At exterior areas for assisted rescue, signage shall be provided in accordance with Section 1009.11.
5. At two-way communication systems, signage shall be provided in accordance with Section 1009.8.2.
6. In *interior exit stairways* and *ramps*, floor level signage shall be provided in accordance with Section 1023.9.
7. Signs identifying the type of access provided on amusement rides required to be *accessible* by Section 1110.4.8 shall be provided at entries to queues and waiting lines. In addition, where *accessible* unload areas also serve as *accessible* load areas, signs indicating the location of the *accessible* load and unload areas shall be provided at entries to queues and waiting lines. These directional sign characters shall meet the visual character requirements in accordance with ICC A117.1.

DRAFT

8. At bus stops and terminals, signage shall be provided in accordance with Section 1113.4.
9. At fixed facilities and stations, signage shall be provided in accordance with Sections 1114.2.2 through 1114.2.2.3.
10. At airports, terminal information systems shall be provided in accordance with Section 1115.3.

1111.4 Variable message signs. Where provided in the locations in Sections 1111.4.1 and 1111.4.2, variable message signs shall comply with the variable message sign requirements of ICC A117.1.

1111.4.1 Transportation facilities. Where provided in transportation facilities, variable message signs conveying transportation-related information shall comply with Section 1111.4.

1111.4.2 Emergency shelters. Where provided in buildings that are designated as emergency shelters, variable message signs conveying emergency-related information shall comply with Section 1111.4.

Exception: Where equivalent information is provided in an audible manner, variable message signs are not required to comply with ICC A117.1.

[W][S] 1111.5 Designations. Interior and exterior signs identifying permanent rooms and spaces shall be visual characters, raised characters and braille complying with ICC A117.1. Where pictograms are provided as designations of interior rooms and spaces, the pictograms shall have visual characters, raised characters and braille complying with ICC A117.1.

Exceptions:

1. Exterior signs that are not located at the door to the space they serve are not required to comply.
2. Building directories, menus, seat and row designations in assembly areas, occupant names, building addresses and company names and logos are not required to comply.
3. Signs in parking facilities are not required to comply.
4. Temporary (seven days or less) signs are not required to comply.
5. In detention and correctional facilities, signs not located in public areas are not required to comply.

[W][S] 1111.6 Directional and informational signs. Signs that provide direction to, or information about, permanent interior spaces of the site and facilities shall contain visual characters complying with ICC A117.1.

Exception: Building directories, personnel names, company or occupant names and logos, menus and temporary (seven days or less) signs are not required to comply with ICC A117.1.

DRAFT

[W][S] SECTION 1112
TELEPHONES

[W][S] 1112.1 General. Where coin-operated public pay telephones, coinless public pay telephones, public *closed-circuit telephones*, courtesy phones or other types of public telephones are provided, *accessible* public telephones shall be provided in accordance with Sections 1112.2 through 1112.5 for each type of public telephone provided. For purposes of this section, a bank of telephones shall be considered two or more adjacent telephones.

[W][S] 1112.2 Wheelchair-accessible telephones. Where public telephones are provided, *wheelchair-accessible* telephones shall be provided in accordance with Table 1112.2.

Exception: Drive-up-only public telephones are not required to be *accessible*.

[S] TABLE 1112.2
WHEELCHAIR-ACCESSIBLE TELEPHONES

NUMBER OF TELEPHONES PROVIDED ON A FLOOR, LEVEL OR EXTERIOR SITE	MINIMUM REQUIRED NUMBER OF WHEELCHAIR-ACCESSIBLE TELEPHONES
1 or more single unit	1 per floor, level and exterior site
1 bank	1 per floor, level and exterior site
2 or more banks	1 per bank

[W][S] 1112.3 Volume controls. All public telephones provided shall have accessible volume control.

[W][S] 1112.4 TTYs. TTYs shall be provided in accordance with Sections 1112.4.1 through 1112.4.9.

1112.4.1 Bank requirement. Where four or more public pay telephones are provided at a bank of telephones, at least one public TTY shall be provided at that bank.

Exception: TTYs are not required at banks of telephones located within 200 feet (60 960 mm) of, and on the same floor as, a bank containing a public TTY.

1112.4.2 Floor requirement. Where four or more public pay telephones are provided on a floor of a privately owned building, at least one public TTY shall be provided on that floor. Where at least one public pay telephone is provided on a floor of a publicly owned building, at least one public TTY shall be provided on that floor.

1112.4.3 Building requirement. Where four or more public pay telephones are provided in a privately owned building, at least one public TTY shall be provided in the building. Where at least one public pay telephone is provided in a publicly owned building, at least one public TTY shall be provided in the building.

1112.4.4 Site requirement. Where four or more public pay telephones are provided on a site, at least one public TTY shall be provided on the site.

1112.4.5 Rest stops, emergency road stops, and service plazas. Where a public pay telephone is provided at a public rest stop, emergency road stop or service plaza, at least one public TTY shall be provided.

1112.4.6 Hospitals. Where a public pay telephone is provided in or adjacent to a hospital emergency room, hospital recovery room or hospital waiting room, at least one public TTY shall be provided at each such location.

1112.4.7 Transportation facilities. Transportation facilities shall be provided with TTYs in accordance with Sections 1114.2.5 and 1115.2 in addition to the TTYs required by Sections 1112.4.1 through 1112.4.4.

1112.4.8 Detention and correctional facilities. In detention and correctional facilities, where a public pay telephone is provided in a secured area used only by detainees or inmates and security personnel, then at least one TTY shall be provided in at least one secured area.

1112.4.9 Signs. Public TTYs shall be identified by the International Symbol of TTY complying with ICC A117.1. Directional signs indicating the location of the nearest public TTY shall be provided at banks of public pay telephones not containing a public TTY. Additionally, where signs provide direction to public pay telephones, they shall also provide direction to public TTYs. Such signs shall comply with visual signage requirements in ICC A117.1 and shall include the International Symbol of TTY.

[W][S] 1112.5 Shelves for portable TTYs. Where a bank of telephones in the interior of a building consists of three or more public pay telephones, at least one public pay telephone at the bank shall be provided with a shelf and an electrical outlet.

Exceptions:

1. In secured areas of detention and correctional facilities, if shelves and outlets are prohibited for purposes of security or safety shelves and outlets for TTYs are not required to be provided.
2. The shelf and electrical outlet shall not be required at a bank of telephones with a TTY.

DRAFT

[W][S] SECTION 1113
BUS STOPS

[W][S] 1113.1 General. Bus stops shall comply with Sections 1113.2 through 1113.5.

[W][S] 1113.2 Bus boarding and alighting areas. Bus boarding and alighting areas shall comply with Sections 1113.2.1 through 1113.2.4.

1113.2.1 Surface. Bus boarding and alighting areas shall have a firm, stable surface.

1113.2.2 Dimensions. Bus boarding and alighting areas shall have a clear length of 96 inches (2440 mm) minimum, measured perpendicular to the curb or vehicle roadway edge, and a clear width of 60 inches (1525 mm) minimum, measured parallel to the vehicle roadway.

1113.2.3 Connection. Bus boarding and alighting areas shall be connected to streets, sidewalks or pedestrian paths by an *accessible route* complying with Section 1104.

1113.2.4 Slope. Parallel to the roadway, the slope of the bus boarding and alighting area shall be the same as the roadway, to the maximum extent practicable. For water drainage, a maximum slope of 1:48 perpendicular to the roadway is allowed.

[W][S] 1113.3 Bus shelters. Where provided, new or replaced bus shelters shall provide a minimum clear floor or ground space complying with ICC A117.1, Section 305, entirely within the shelter. Such shelters shall be connected by an *accessible route* to the boarding area required by Section 1113.2.

[W][S] 1113.4 Signs. New bus route identification signs shall have finish and contrast complying with ICC A117.1. Additionally, to the maximum extent practicable, new bus route identification signs shall provide visual characters complying with ICC A117.1.

Exception: Bus schedules, timetables and maps that are posted at the bus stop or bus bay are not required to meet this requirement.

[W][S] 1113.5 Bus stop siting. Bus stop sites shall be chosen such that, to the maximum extent practicable, the areas where lifts or ramps are to be deployed comply with Sections 1113.2 and 1113.3.

[W][S] SECTION 1114
TRANSPORTATION FACILITIES AND STATIONS

[W][S] 1114.1 General. Fixed transportation facilities and stations shall comply with the applicable provisions of Section 1114.2.

[W][S] 1114.2 New construction. New stations in rapid rail, light rail, commuter rail, intercity rail, high speed rail and other fixed guideway systems shall comply with Sections 1114.2.1 through 1114.2.8.

[W][S] 1114.2.1 Station entrances. Where different entrances to a station serve different transportation fixed routes or groups of fixed routes, at least one entrance serving each group or route shall comply with Section 1104.

[W][S] 1114.2.2 Signs. Signage in fixed transportation facilities and stations shall comply with Sections 1114.2.2.1 through 1114.2.2.3.

1114.2.2.1 Raised character and braille signs. Where signs are provided at entrances to stations identifying the station or the entrance, or both, at least one sign at each entrance shall be raised characters and braille. A minimum of one raised character and braille sign identifying the specific station shall be provided on each platform or boarding area. Such signs shall be placed in uniform locations at entrances and on platforms or boarding areas within the transit system to the maximum extent practicable.

Exceptions:

1. Where the station has no defined entrance but signs are provided, the raised characters and braille signs shall be placed in a central location.
2. Signs are not required to be raised characters and braille where audible signs are remotely transmitted to hand-held receivers, or are user or proximity actuated.

1114.2.2.2 Identification signs. Stations covered by this section shall have identification signs containing visual characters complying with ICC A117.1. Signs shall be clearly visible and within the sightlines of a standing or sitting passenger from within the train on both sides when not obstructed by another train.

1114.2.2.3 Informational signs. Lists of stations, routes and destinations served by the station which are located on boarding areas, platforms or mezzanines shall provide visual characters complying with ICC A117.1 Signs covered by this provision shall, to the maximum extent practicable, be placed in uniform locations within the transit system.

[W][S] 1114.2.3 Fare machines. Self-service fare vending, collection and adjustment machines shall comply with ICC A117.1, Section 707. Where self-service fare vending, collection or adjustment machines are provided for the use of the general public, at least one accessible machine of each type provided shall be provided at each accessible point of entry and exit.

[W][S] 1114.2.4 Rail-to-platform height. Station platforms shall be positioned to coordinate with vehicles in accordance with the applicable provisions of 36 CFR, Part 1192. Low-level platforms shall be 8 inches (250 mm) minimum above top of rail.

Exception: Where vehicles are boarded from sidewalks or street level, low-level platforms shall be permitted to be less than 8 inches (250 mm).

[W][S] 1114.2.5 TTYs. Where a public pay telephone is provided in a transit facility (as defined by the Department of Transportation) at least one public TTY complying with ICC A117.1, Section 704.4, shall be provided in the station. In addition, where one or more public pay telephones serve a particular entrance to a transportation facility, at least one TTY telephone complying with ICC A117.1, Section 704.4, shall be provided to serve that entrance.

[W][S] 1114.2.6 Track crossings. Where a *circulation path* serving boarding platforms crosses tracks, an *accessible route* shall be provided.

Exception: Openings for wheel flanges shall be permitted to be 2-1/2 inches (64 mm) maximum.

[W][S] 1114.2.7 Public address systems. Where public address systems convey audible information to the public, the same or equivalent information shall be provided in a visual format.

[W][S] 1114.2.8 Clocks. Where clocks are provided for use by the general public, the clock face shall be uncluttered so that its elements are clearly visible. Hands, numerals and digits shall contrast with the background either light-on-dark or dark-on-light. Where clocks are mounted overhead, numerals and digits shall comply with visual character requirements.

[W][S] SECTION 1115
AIRPORTS

[W][S] 1115.1 New construction. New construction of airports shall comply with Sections 1115.2 through 1115.4.

[W][S] 1115.2 TTYs. Where public pay telephones are provided, at least one TTY shall be provided in compliance with ICC A117.1, Section 704.4. Additionally, if four or more public pay telephones are located in a main terminal outside the security

DRAFT

areas, a concourse within the security areas or a baggage claim area in a terminal, at least one public TTY complying with ICC A117.1, Section 704.4, shall also be provided in each such location.

[W][S] 1115.3 Terminal information systems. Where terminal information systems convey audible information to the public, the same or equivalent information shall be provided in a visual format.

[W][S] 1115.4 Clocks. Where clocks are provided for use by the general public, the clock face shall be uncluttered so that its elements are clearly visible. Hands, numerals and digits shall contrast with the background either light-on-dark or dark-on-light. Where clocks are mounted overhead, numerals and digits shall comply with visual character requirements.

DRAFT

CHAPTER 12

INTERIOR ENVIRONMENT

User note:

About this chapter: *Chapter 12 provides minimum provisions for the interior of buildings—the occupied environment. Ventilation, lighting, and space heating are directly regulated in this chapter and in conjunction with the* International Mechanical Code® *and the* International Energy Conservation Code®*. Minimum room size and maximum room-to-room sound transmission are set for certain occupancies.*

SECTION 1201
GENERAL

1201.1 Scope. The provisions of this chapter shall govern ventilation, temperature control, lighting, *yards* and *courts*, sound transmission, room dimensions, surrounding materials and rodentproofing associated with the interior spaces of buildings.

SECTION 1202
VENTILATION

[S] 1202.1 General. Buildings shall be provided with natural ventilation in accordance with Section 1202.5, or mechanical ventilation in accordance with the *International Mechanical Code*.

((~~Where the air infiltration rate in a *dwelling unit* is less than 5 air changes per hour where tested with a blower door at a pressure 0.2 inch w.c. (50 Pa) in accordance with Section R402.4.1.2 of the *International Energy Conservation Code—Residential Provisions*, the *dwelling unit* shall be ventilated by mechanical means in accordance with Section 403 of the *International Mechanical Code*.~~)) *Ambulatory care facilities* and Group I-2 occupancies shall be ventilated by mechanical means in accordance with Section 407 of the *International Mechanical Code*.

1202.2 Roof ventilation. Roof assemblies shall be ventilated in accordance with this section or shall comply with Section 1202.3.

[S] 1202.2.1 ((~~Ventilated attics and rafter~~)) Attic spaces. Enclosed *attics* and enclosed rafter spaces formed where ceilings are applied directly to the underside of roof framing members shall have cross ventilation for each separate space by ventilation openings protected against the entrance of rain and snow. Blocking and bridging shall be arranged so as not to interfere with the movement of air. An airspace of not less than 1 inch (25 mm) shall be provided between the insulation and the roof sheathing. The net free ventilating area shall be not less than 1/150 of the area of the space ventilated. Ventilators shall be installed in accordance with manufacturer's installation instructions.

Exception: The net free cross-ventilation area shall be permitted to be reduced to 1/300 ((~~provided both of the following conditions are met:~~

~~1. In Climate Zones 6, 7 and 8, a Class I or II vapor retarder is installed on the warm-in-winter side of the ceiling.~~

~~2. At~~)) if at least 40 percent and not more than 50 percent of the required venting area is provided by ventilators located in the upper portion of the *attic* or rafter space. Upper ventilators shall be located not more than 3 feet (914 mm) below the ridge or highest point of the space, measured vertically, with the balance of the *ventilation* provided by eave or cornice vents. Where the location of wall or roof framing members conflicts with the installation of upper ventilators, installation more than 3 feet (914 mm) below the ridge or highest point of the space shall be permitted.

1202.2.2 Openings into attic. Exterior openings into the *attic* space of any building intended for human occupancy shall be protected to prevent the entry of birds, squirrels, rodents, snakes and other similar creatures. Openings for ventilation having a least dimension of not less than 1/16 inch (1.6 mm) and not more than 1/4 inch (6.4 mm) shall be permitted. Openings for ventilation having a least dimension larger than 1/4 inch (6.4 mm) shall be provided with corrosion-resistant wire cloth screening, hardware cloth, perforated vinyl or similar material with openings having a least dimension of not less than 1/16 inch (1.6 mm) and not more than 1/4 inch (6.4 mm). Where combustion air is obtained from an *attic* area, it shall be in accordance with Chapter 7 of the *International Mechanical Code*.

[S] 1202.3 Unvented attic and unvented enclosed rafter assemblies. Unvented *attics* and unvented enclosed roof framing assemblies created by ceilings applied directly to the underside of the roof framing members/rafters and the structural roof sheathing at the top of the roof framing members shall be permitted where all of the following conditions are met:

1. The unvented *attic* space is completely within the *building thermal envelope*.

DRAFT

2. No interior Class I vapor retarders are installed on the ceiling side (*attic* floor) of the unvented *attic* assembly or on the ceiling side of the unvented enclosed roof framing assembly.
3. Where wood shingles or shakes are used, not less than a 1/4-inch (6.4 mm) vented airspace separates the shingles or shakes and the roofing underlayment above the structural sheathing.

((~~4. In Climate Zones 5, 6, 7 and 8, any air-impermeable insulation shall be a Class II vapor retarder or shall have a Class II vapor retarder coating or covering in direct contact with the underside of the insulation.~~

~~5~~)) 4. Insulation shall be located in accordance with the following:

((~~5.1~~)) 4.1. Item ((~~5.1.1, 5.1.2, 5.1.3 or 5.1.4~~)) 4.1.1, 4.1.2, 4.1.3 or 4.1.4 shall be met, depending on the air permeability of the insulation directly under the structural roof sheathing.

((~~5.1.1~~)) 4.1.1. Where only air-impermeable insulation is provided, it shall be applied in direct contact with the underside of the structural roof sheathing.

((~~5.1.2~~)) 4.1.2. Where air-permeable insulation is provided inside the building thermal envelope, it shall be installed in accordance with Item ((~~5.1.1~~)) 4.1.1. In addition to the air-permeable insulation installed directly below the structural sheathing, rigid board or sheet insulation shall be installed directly above the structural roof sheathing ((~~in accordance with the *R* values in Table 1202.3 for condensation control~~)) and shall have a minimum R value of 10.

((~~5.1.3~~)) 4.1.3. Where both air-impermeable and air-permeable insulation are provided, the *air-impermeable insulation* shall be applied in direct contact with the underside of the structural roof sheathing in accordance with Item ((~~5.1.1~~)) 4.1.1 and shall ((~~be in accordance with the *R*-values in Table 1202.3 for condensation control~~)) have a minimum R value of 10. The *air-permeable insulation* shall be installed directly under the *air-impermeable insulation.*

((~~5.1.4~~)) 4.1.4. Alternatively, sufficient rigid board or sheet insulation shall be installed directly above the structural roof sheathing to maintain the monthly average temperature of the underside of the structural roof sheathing above 45°F (7°C). For calculation purposes, an interior air temperature of 68°F (20°C) is assumed and the exterior air temperature is assumed to be the monthly average outside air temperature of the three coldest months.

((~~5.2~~)) 4.2. Where preformed insulation board is used as the *air-impermeable insulation* layer, it shall be sealed at the perimeter of each individual sheet interior surface to form a continuous layer.

((~~Exceptions~~)) Exception: ((~~1.~~)) Section 1202.3 does not apply to special use structures or enclosures such as swimming pool enclosures, data processing centers, hospitals or art galleries.

((~~2. Section 1202.3 does not apply to enclosures in Climate Zones 5 through 8 that are humidified beyond 35 percent during the three coldest months.~~))

((~~TABLE 1202.3~~
~~INSULATION FOR CONDENSATION CONTROL~~

~~CLIMATE ZONE~~	~~MINIMUM *R* VALUE OF AIR-IMPERMEABLE INSULATION[a]~~
~~2B and 3B tile roof only~~	~~0 (none required)~~
~~1, 2A, 2B, 3A, 3B, 3C~~	~~R-5~~
~~4C~~	~~R-10~~
~~4A, 4B~~	~~R-15~~
~~5~~	~~R-20~~
~~6~~	~~R-25~~
~~7~~	~~R-30~~
~~8~~	~~R-35~~

~~a. Contributes to, but does not supersede, thermal resistance requirements for attic and roof assemblies in Section C402.2.1 of the *International Energy Conservation Code*.~~))

[W] 1202.4 Under-floor ventilation. The space between the bottom of the floor joists and the earth under any building except spaces occupied by basements or cellars shall be provided with ventilation in accordance with Section 1202.4.1, 1202.4.2 or 1202.4.3. A ground cover of six mil (0.006 inch thick) black polyethylene or *approved* equal shall be laid over the ground within crawl spaces. The ground cover shall be overlapped six inches minimum at the joints and shall extend to the foundation wall.

Exception: The ground cover may be omitted in crawl spaces if the crawl space has a concrete slab floor with a minimum thickness of two inches.

1202.4.1 Ventilation openings. Ventilation openings through foundation walls shall be provided. The openings shall be placed so as to provide cross ventilation of the under-floor space. The net area of ventilation openings shall be in accordance

DRAFT

with Section 1202.4.1.1 or 1202.4.1.2. Ventilation openings shall be covered for their height and width with any of the following materials, provided that the least dimension of the covering shall be not greater than 1/4 inch (6.4 mm):

1. Perforated sheet metal plates not less than 0.070 inch (1.8 mm) thick.
2. Expanded sheet metal plates not less than 0.047 inch (1.2 mm) thick.
3. Cast-iron grilles or gratings.
4. Extruded load-bearing vents.
5. Hardware cloth of 0.035-inch (0.89 mm) wire or heavier.
6. Corrosion-resistant wire mesh, with the least dimension not greater than 1/8 inch (3.2 mm).
7. Operable louvres, where ventilation is provided in accordance with Section 1202.4.1.2.

1202.4.1.1 Ventilation area for crawl spaces with open earth floors. The net area of ventilation openings for crawl spaces with uncovered earth floors shall be not less than 1 square foot for each 150 square feet (0.67 m^2 for each 100 m^2) of crawl space area.

1202.4.1.2 Ventilation area for crawl spaces with covered floors. The net area of ventilation openings for crawl spaces with the ground surface covered with a Class I vapor retarder shall be not less than 1 square foot for each 1,500 square feet (0.67 m^2 for each 1000 m^2) of crawl space area.

1202.4.2 Ventilation in cold climates. In extremely cold climates, where a ventilation opening will cause a detrimental loss of energy, ventilation openings to the interior of the structure shall be provided.

1202.4.3 Mechanical ventilation. Mechanical ventilation shall be provided to crawl spaces where the ground surface is covered with a Class I vapor retarder. Ventilation shall be in accordance with Section 1202.4.3.1 or 1202.4.3.2.

1202.4.3.1 Continuous mechanical ventilation. Continuously operated mechanical ventilation shall be provided at a rate of 1.0 cubic foot per minute (cfm) for each 50 square feet (1.02 L/s for each 10 m^2) of crawl space ground surface area and the ground surface shall be covered with a Class I vapor retarder.

1202.4.3.2 Conditioned space. The crawl space shall be conditioned in accordance with the *International Mechanical Code* and the walls of the crawl space shall be insulated in accordance with the *International Energy Conservation Code.*

1202.4.4 Flood hazard areas. For buildings in flood hazard areas as established in Section 1612.3, the openings for underfloor ventilation shall be deemed as meeting the flood opening requirements of ASCE 24 provided that the ventilation openings are designed and installed in accordance with ASCE 24.

[W] 1202.5 Natural ventilation. ((~~Natural~~)) Where provided in other than Group R occupancies, natural *ventilation* of an occupied space shall be through windows, doors, louvers or other openings to the outdoors. The operating mechanism for such openings shall be provided with ready access so that the openings are readily controllable by the building occupants. Group R occupancies shall comply with the *International Mechanical Code*.

1202.5.1 Ventilation area required. The openable area of the openings to the outdoors shall be not less than 4 percent of the floor area being ventilated.

1202.5.1.1 Adjoining spaces. Where rooms and spaces without openings to the outdoors are ventilated through an adjoining room, the opening to the adjoining room shall be unobstructed and shall have an area of not less than 8 percent of the floor area of the interior room or space, but not less than 25 square feet (2.3 m^2). The openable area of the openings to the outdoors shall be based on the total floor area being ventilated.

Exception: Exterior openings required for *ventilation* shall be allowed to open into a sunroom with *thermal isolation* or a patio cover provided that the openable area between the sunroom addition or patio cover and the interior room shall have an area of not less than 8 percent of the floor area of the interior room or space, but not less than 20 square feet (1.86 m^2). The openable area of the openings to the outdoors shall be based on the total floor area being ventilated.

1202.5.1.2 Openings below grade. Where openings below grade provide required natural *ventilation*, the outside horizontal clear space measured perpendicular to the opening shall be one and one-half times the depth of the opening. The depth of the opening shall be measured from the average adjoining ground level to the bottom of the opening.

1202.5.2 Contaminants exhausted. Contaminant sources in naturally ventilated spaces shall be removed in accordance with the *International Mechanical Code* and the *International Fire Code*.

1202.5.2.1 Bathrooms. Rooms containing bathtubs, showers, spas and similar bathing fixtures shall be mechanically ventilated in accordance with the *International Mechanical Code*.

1202.5.3 Openings on yards or courts. Where natural *ventilation* is to be provided by openings onto *yards* or *courts*, such *yards* or *courts* shall comply with Section 1205.

1202.6 Other ventilation and exhaust systems. *Ventilation* and exhaust systems for occupancies and operations involving flammable or combustible hazards or other contaminant sources as covered in the *International Mechanical Code* or the *International Fire Code* shall be provided as required by both codes.

DRAFT

[W] 1202.7 Crawlspace ventilation. All crawlspaces shall be ventilated as specified in Section 1202.4. If the installed ventilation in a crawlspace is less than one square foot for each 300 square feet of crawlspace area, or if the crawlspace vents are equipped with operable louvers, a radon vent shall be installed to originate from a point between the ground cover and soil. The radon vent shall be installed in accordance with Sections 1202.7.2 through 1202.7.6.

1202.7.1 Crawlspace plenum systems. In crawlspace plenum systems used for providing supply air for an HVAC system, aggregate, a permanently sealed soil gas retarder membrane and a radon vent pipe shall be installed in accordance with Section 1202.7.2 through 1202.7.6. Crawlspaces shall not be used for return air plenums.

In addition, an operable radon vent fan shall be installed and activated. The fan shall be located as specified in Section 1202.7.6. The fan shall be capable of providing at least 100 cfm at 1-inch water column static pressure. The fan shall be controlled by a readily accessible manual switch. The switch shall be labeled "RADON VENT FAN."

1202.7.2 Aggregate. A layer of aggregate of 4-inch minimum thickness shall be placed beneath concrete slabs. The aggregate shall be continuous to the extent practical.

1202.7.2.1 Aggregate grade. Aggregate shall:

1. Comply with ASTM Standard C-33 Standard Specification for Concrete Aggregate and shall be size No. 8 or larger size aggregate as listed in Table 2, Grading Requirements for Coarse Aggregate; or
2. Meet the 1988 Washington State Department of Transportation Specification 9-03.1 (3) "Coarse Aggregate for Portland Cement Concrete," or any equivalent successor standards. Aggregate size shall be of Grade 8 or larger as listed in Section 9-03.1 (3) C, "Grading"; or
3. Be screened, washed pea gravel free of deleterious substances in a manner consistent with ASTM Standard C-33 with 100 percent passing a 1/2-inch sieve and less than 5 percent passing a No. 16 sieve. Sieve characteristics shall conform to those acceptable under ASTM Standard C-33.

Exception: Aggregate shall not be required if a substitute material or system, with sufficient load-bearing characteristics, and having *approved* capability to provide equal or superior air flow, is installed.

1202.7.3 Soil-gas retarder membrane. A soil-gas retarder membrane, consisting of at least one layer of virgin polyethylene with a thickness of at least 6 mil, or equivalent flexible sheet material, shall be either placed directly under all concrete slabs so that the slab is in direct contact with the membrane, or on top of the aggregate with 2 inches minimum of fine sand or pea gravel installed between the concrete slab and membrane. The flexible sheet shall extend to the foundation wall or to the outside edge of the monolithic slab. Seams shall overlap at least 12 inches. The membrane shall also be fitted tightly to all pipes, wires, and other penetrations of the membrane and sealed with an *approved* sealant or tape. All punctures or tears shall be repaired with the same or *approved* material and similarly lapped and sealed.

1202.7.4 Sealing of penetrations and joints. All penetrations and joints in concrete slabs or other floor systems and walls below grade shall be sealed by an *approved* sealant to create an air barrier to limit the movement of soil-gas into the indoor air.

Sealants shall be *approved* by the manufacturer for the intended purpose. Sealant joints shall conform to manufacturer's specifications. The sealant shall be placed and tooled in accordance with manufacturer's specifications. There shall be no gaps or voids after the sealant has cured.

1202.7.5 Radon vent. One continuous sealed pipe shall run from a point within the aggregate under each concrete slab to a point outside the building. Joints and connections shall be permanently gas tight. The continuous sealed pipe shall interface with the aggregate in the following manner, or by other *approved* equal method. The pipe shall be permanently connected to a "T" within the aggregate area so that the two end openings of the "T" lie within the aggregate area. A minimum of 5 feet of perforated drain pipe of 3 inches minimum diameter shall join to and extend from the "T." The perforated pipe shall remain in the aggregate area and shall not be capped at the ends. The "T" and its perforated pipe extensions shall be located at least 5 feet horizontally from the exterior perimeter of the aggregate area.

The continuous sealed pipe shall terminate no less than 12 inches above the eave, and more than 10 horizontal feet from a woodstove or fireplace chimney, or operable window. The continuous sealed pipe shall be labeled "radon vent." The label shall be placed so as to remain visible to an occupant.

The minimum pipe diameter shall be 3 inches unless otherwise *approved*. Acceptable sealed plastic pipe shall be smooth walled, and may include either PVC schedule 40 or ABS schedule of equivalent wall thickness.

The entire sealed pipe system shall be sloped to drain to the subslab aggregate.

The sealed pipe system may pass through an unconditioned *attic* before exiting the building; but to the extent practicable, the sealed pipe shall be located inside the thermal envelope of the building in order to enhance passive stack venting.

Exception: A fan for subslab depressurization system includes the following:

1. Soil-gas retarder membrane as specified in Section 1202.7.3;

DRAFT

2. Sealing of penetrations and joints as specified in Section 1202.7.4;
3. A 3-inch continuous sealed radon pipe shall run from a point within the aggregate under each concrete slab to a point outside the building;
4. Joints and connections shall be gas tight, and may be of either PVC schedule 40 or ABS schedule of equivalent wall thickness;
5. A label of "radon vent" shall be placed on the pipe so as to remain visible to an occupant;
6. Fan circuit and wiring as specified in Section 1202.7.6 and a fan.

If the subslab depressurization system is exhausted through the concrete foundation wall or rim joist, the exhaust terminus shall be a minimum of 6 feet from operable windows or outdoor air intake vents and shall be directed away from operable windows and outdoor air intake vents to prevent radon reentrainment.

1202.7.6 Fan circuit and wiring and location. An area for location of an in-line fan shall be provided. The location shall be as close as practicable to the radon vent pipe's point of exit from the building, or shall be outside the building shell; and shall be located so that the fan and all downstream piping is isolated from the indoor air. Provisions shall be made to allow future activation of an inline fan on the radon vent pipe without the need to place new wiring. A 110 volt power supply shall be provided at a junction box near the fan location.

SECTION 1203
TEMPERATURE CONTROL

[W] 1203.1 Equipment and systems. Interior spaces intended for human occupancy shall be provided with active or passive space heating systems capable of maintaining an indoor temperature of not less than 68°F (20°C) at a point 3 feet (914 mm) above the floor ((~~on the design heating day~~)) when the outside temperature is 24°F.

Exceptions: Space heating systems are not required for:

1. Interior spaces where the primary purpose of the space is not associated with human comfort.
2. Group F, H, S or U occupancies.
3. Group R-1 occupancies not more than 500 square feet (139 m^2) in area.

See the *International Energy Conservation Code* and *International Mechanical Code* for additional requirements for heating systems.

[W] 1203.2 Use of solid-fuel-burning devices.

1203.2.1 Definitions. For the purposes of this section only, the following definitions apply.

DESIGNATED AREAS. Those areas designated by a county to be an urban growth area in Chapter 36.70A RCW and those areas designated by the U.S. Environmental Protection Agency as being in nonattainment for particulate matter.

SUBSTANTIALLY REMODELED. Any alteration or restoration of a building exceeding 60 percent of the appraised value of such building within a 12-month period. For the purpose of this section, the appraised value is the estimated cost to replace the building and structure in kind, based on current replacement costs.

1203.2.2 Primary heating source. Primary heating sources in all new and substantially remodeled buildings in designated areas shall not be dependent upon wood stoves.

1203.2.3 Solid fuel burning devices. No new or used solid fuel burning device shall be installed in new or *existing buildings* unless such device is United States Environmental Protection Agency certified or exempt from certification by the United States Environmental Protection Agency and conforms with RCW 70.94.011, 70.94.450, 70.94.453 and 70.94.457.

Exceptions:

1. Wood cook stoves.
2. Antique wood heaters manufactured prior to 1940.

SECTION 1204
LIGHTING

1204.1 General. Every space intended for human occupancy shall be provided with natural light by means of exterior glazed openings in accordance with Section 1204.2 or shall be provided with artificial light in accordance with Section 1204.3. Exterior glazed openings shall open directly onto a *public way* or onto a *yard* or *court* in accordance with Section 1205.

1204.2 Natural light. The minimum net glazed area shall be not less than 8 percent of the floor area of the room served.

DRAFT

1204.2.1 Adjoining spaces. For the purpose of natural lighting, any room is permitted to be considered as a portion of an adjoining room where one-half of the area of the common wall is open and unobstructed and provides an opening of not less than one-tenth of the floor area of the interior room or 25 square feet (2.32 m^2), whichever is greater.

Exception: Openings required for natural light shall be permitted to open into a sunroom with *thermal isolation* or a patio cover where the common wall provides a glazed area of not less than one-tenth of the floor area of the interior room or 20 square feet (1.86 m^2), whichever is greater.

1204.2.2 Exterior openings. Exterior openings required by Section 1204.2 for natural light shall open directly onto a *public way*, *yard* or *court*, as set forth in Section 1205.

Exceptions:

1. Required exterior openings are permitted to open into a roofed porch where the porch meets all of the following criteria:
   1.1. Abuts a *public way*, *yard* or *court*.
   1.2. Has a ceiling height of not less than 7 feet (2134 mm).
   1.3. Has a longer side at least 65 percent open and unobstructed.
2. Skylights are not required to open directly onto a *public way*, *yard* or *court*.

1204.3 Artificial light. Artificial light shall be provided that is adequate to provide an average illumination of 10 footcandles (107 lux) over the area of the room at a height of 30 inches (762 mm) above the floor level.

1204.4 Stairway illumination. *Stairways* within *dwelling units* and *exterior stairways* serving a *dwelling unit* shall have an illumination level on tread runs of not less than 1 footcandle (11 lux). *Stairways* in other occupancies shall be governed by Chapter 10.

[S] 1204.4.1 Controls. The control for activation of the required *stairway* lighting shall be in accordance with ((~~NFPA 70~~)) the *Seattle Electrical Code* and the *International Energy Conservation Code*.

1204.5 Emergency egress lighting. The *means of egress* shall be illuminated in accordance with Section 1008.1.

DRAFT

SECTION 1205
YARDS OR COURTS

1205.1 General. This section shall apply to *yards* and *courts* adjacent to exterior openings that provide natural light or ventilation. Such *yards* and *courts* shall be on the same *lot* as the building.

1205.2 Yards. *Yards* shall be not less than 3 feet (914 mm) in width for buildings two *stories* or less above *grade plane*. For buildings more than two *stories above grade plane*, the minimum width of the *yard* shall be increased at the rate of 1 foot (305 mm) for each additional *story*. For buildings exceeding 14 *stories above grade plane*, the required width of the *yard* shall be computed on the basis of 14 *stories above grade plane*.

1205.3 Courts. *Courts* shall be not less than 3 feet (914 mm) in width. *Courts* having windows opening on opposite sides shall be not less than 6 feet (1829 mm) in width. *Courts* shall be not less than 10 feet (3048 mm) in length unless bounded on one end by a *public way* or *yard*. For buildings more than two *stories above grade plane*, the *court* shall be increased 1 foot (305 mm) in width and 2 feet (610 mm) in length for each additional *story*. For buildings exceeding 14 *stories above grade plane*, the required dimensions shall be computed on the basis of 14 *stories above grade plane*.

1205.3.1 Court access. Access shall be provided to the bottom of *courts* for cleaning purposes.

1205.3.2 Air intake. *Courts* more than two *stories* in height shall be provided with a horizontal air intake at the bottom not less than 10 square feet (0.93 m^2) in area and leading to the exterior of the building unless abutting a *yard* or *public way*.

[S] 1205.3.3 Court drainage. The bottom of every *court* shall be properly graded and drained to a public sewer or other *approved* disposal system complying with the ((~~*International*~~)) *Uniform Plumbing Code*.

SECTION 1206
SOUND TRANSMISSION

[W] 1206.1 Scope. This section shall apply to common interior walls, partitions and floor/ceiling assemblies between adjacent *dwelling units* and *sleeping units* or between *dwelling units* and *sleeping units* and adjacent public areas. ((~~such as halls, corridors, stairways or service areas.~~))

[S] 1206.2 Airborne sound. Walls, partitions and floor-ceiling assemblies separating *dwelling units* and *sleeping units* from each other or from public or service areas shall have a sound transmission class of not less than 50, or not less than 45 if field tested, for airborne noise where tested in accordance with ASTM E90. Alternatively, the sound transmission class of walls, partitions and floor-ceiling assemblies shall be established by engineering analysis based on a comparison of walls, partitions and

floor-ceiling assemblies having sound transmission class ratings as determined by the test procedures set forth in ASTM E90. Penetrations or openings in construction assemblies for piping; electrical devices; recessed cabinets; bathtubs; soffits; or heating, ventilating or exhaust ducts shall be sealed, lined, insulated or otherwise treated to maintain the required ratings. ((~~This requirement shall not apply to entrance doors; however, such doors shall be tight fitting to the frame and sill.~~))

Exception: *Dwelling unit* or guest room entrance doors from interior corridors and interconnecting doors between separate units shall have perimeter seals. Such door assemblies shall have a sound transmission class (STC) rating of not less than 28.

1206.2.1 Masonry. The sound transmission class of concrete masonry and clay masonry assemblies shall be calculated in accordance with TMS 0302 or determined through testing in accordance with ASTM E90.

[S] 1206.3 Structure-borne sound. Floor-ceiling assemblies between *dwelling units* and *sleeping units* or between a *dwelling unit* or *sleeping unit* and a public or service area within the structure shall have an impact insulation class rating of not less than 50, or not less than 45 if field tested, where tested in accordance with ASTM E492. Alternatively, the impact insulation class of floor-ceiling assemblies shall be established by engineering analysis based on a comparison of floor-ceiling assemblies having impact insulation class ratings as determined by the test procedures in ASTM E492.

Exception: Floor assemblies in the bathrooms of Group R-1 occupancies are not required to meet the impact insulation class of 50 where structural concrete floor systems are used.

Joints in the perimeter of the separating wall or floor-ceiling assemblies shall be acoustically sealed with a permanent resilient material *approved* for the purpose. The separating wall or floor-ceiling assembly shall extend completely to and be sealed to another separating assembly or an exterior wall, roof or floor assembly.

Conduits, ducts, pipes and vents within the wall or floor-ceiling assemblies causing vibration shall be reasonably isolated from the building construction at points of support by means of resilient sleeves, mounts or underlayments. All other openings through which such conduits, ducts, pipes or vents pass shall have the excess opening fully sealed with insulative and permanently resilient materials *approved* for the purpose.

Electrical outlet boxes shall not be placed back-to-back and shall be offset by not less than 12 inches (305 mm) from outlets in the opposite wall surface. The back and sides of boxes shall be sealed with one-eighth-inch resilient sealant and backed by a minimum of 2-inch (51 mm) thick material fiber insulation or *approved* equivalent.

Metal ventilating and conditioned air ducts which pass between dwelling units shall be fabricated and installed to maintain required sound transmission ratings.

[S] 1206.4 Tested assemblies. Field- or laboratory-tested wall or floor-ceiling designs having an STC or IIC of 50 or more are permitted to be used without additional field testing when, in the opinion of the *building official*, the tested design has not been compromised by flanking paths. The *building official* is permitted to require tests when evidence of compromised separations is noted.

[S] 1206.5 Field testing and certification. Field testing, when permitted to determine airborne sound transmission or impact sound insulation class, shall be done in accordance with ASTM E 336 or ASTM E 492 under the supervision of an acoustical professional who is experienced in the field of acoustical testing and engineering and who shall forward certified test results to the building official that minimum sound insulation requirements stated above have been met.

[S] 1206.6 Mechanical equipment spaces. Spaces or shafts containing air conditioning, refrigeration or ventilating equipment, elevator machinery, or other mechanical equipment shall be separated both vertically and horizontally from adjoining dwelling units or guest rooms by construction designed to provide a minimum STC rating of 50.

[S] 1206.7 Sound transmission control systems. Generic systems as listed in GA 600 shall be accepted where a laboratory test indicates that the requirements of Section 1207 are met by the system.

Note: Design and materials for sound transmission control shall not impair the fire-resistive integrity of separating walls or floor-ceiling assemblies required to be of fire-resistive construction.

SECTION 1207
INTERIOR SPACE DIMENSIONS

1207.1 Minimum room widths. *Habitable spaces*, other than a kitchen, shall be not less than 7 feet (2134 mm) in any plan dimension. Kitchens shall have a clear passageway of not less than 3 feet (914 mm) between counter fronts and appliances or counter fronts and walls.

[S] 1207.2 Minimum ceiling heights. Occupiable spaces, *habitable spaces* and *corridors* shall have a ceiling height of not less than 7 feet 6 inches (2286 mm) above the finished floor. Bathrooms, toilet rooms, kitchens, storage rooms and laundry rooms shall have a ceiling height of not less than 7 feet (2134 mm) above the finished floor.

Exceptions:

DRAFT

1. In one- and two-family *dwellings*, beams or girders spaced not less than 4 feet (1219 mm) on center shall be permitted to project not more than 6 inches (152 mm) below the required ceiling height.
2. If any room in a building has a sloped ceiling, the prescribed ceiling height for the room is required in one-half the area thereof. Any portion of the room measuring less than 5 feet (1524 mm) from the finished floor to the ceiling shall not be included in any computation of the minimum area thereof.
3. The height of *mezzanines* and spaces below *mezzanines* shall be in accordance with Section 505.2.
4. Corridors contained within a *dwelling unit* or *sleeping unit* in a Group R occupancy shall have a ceiling height of not less than 7 feet (2134 mm) above the finished floor.
5. Ceiling height in the means of egress shall comply with Section 1003.2.

Notwithstanding the exceptions to Section 1207.2, protruding objects in circulation routes in spaces required to be accessible shall comply with Chapter 11 and ANSI A117.1 Section 307.

1207.2.1 Furred ceiling. Any room with a furred ceiling shall be required to have the minimum ceiling height in two-thirds of the area thereof, but in no case shall the height of the furred ceiling be less than 7 feet (2134 mm).

[S] 1207.3 ((~~Room area~~)) *Habitable space* in dwelling units. Every *dwelling unit* shall have not less than one room of *habitable space* ((~~that shall have~~)) with not less than 120 square feet (11.2 m^2) of *net floor area*. Other habitable rooms shall have a *net floor area* of not less than 70 square feet (6.5 m^2).

Exception: Kitchens are not required to be of a minimum floor area.

[W] 1207.4 Efficiency dwelling units. An efficiency ((~~living~~)) dwelling unit shall conform to the requirements of the code except as modified herein:

1. The unit shall have a living room of not less than ((~~220~~)) 190 square feet (((~~20.4~~)) 17.7 m^2) of floor area. ((~~An additional 100 square feet (9.3 m^2) of floor area shall be provided for each occupant of such unit in excess of two.~~))

Interpretation I1208.4: The required square footage shall not include built-in equipment that extends from floor to ceiling such as wardrobes, cabinets, kitchen units or fixtures.

2. The unit shall be provided with a separate closet.
3. The unit shall be provided with a kitchen sink, cooking appliance and refrigeration facilities, each having a clear working space of not less than 30 inches (762 mm) in front. Light and *ventilation* conforming to this code shall be provided.
4. The unit shall be provided with a separate bathroom containing a water closet, lavatory and bathtub or shower.

DRAFT

SECTION 1208
ACCESS TO UNOCCUPIED SPACES

1208.1 Crawl spaces. Crawl spaces shall be provided with not less than one access opening that shall be not less than 18 inches by 24 inches (457 mm by 610 mm).

1208.2 Attic spaces. An opening not less than 20 inches by 30 inches (559 mm by 762 mm) shall be provided to any *attic* area having a clear height of over 30 inches (762 mm). Clear headroom of not less than 30 inches (762 mm) shall be provided in the *attic* space at or above the access opening.

1208.3 Mechanical appliances. Access to mechanical appliances installed in under-floor areas, in *attic* spaces and on roofs or elevated structures shall be in accordance with the *International Mechanical Code*.

SECTION 1209
TOILET AND BATHROOM REQUIREMENTS

[P] 1209.1 Required fixtures. The number and type of plumbing fixtures provided in any occupancy shall comply with Chapter 29.

1209.2 Finish materials. Walls, floors and partitions in toilet and bathrooms shall comply with Sections 1209.2.1 through 1209.2.4.

1209.2.1 Floors and wall bases. In other than *dwelling units*, toilet, bathing and shower room floor finish materials shall have a smooth, hard, nonabsorbent surface. The intersections of such floors with walls shall have a smooth, hard, nonabsorbent vertical base that extends upward onto the walls not less than 4 inches (102 mm).

1209.2.2 Walls and partitions. Walls and partitions within 2 feet (610 mm) of service sinks, urinals and water closets shall have a smooth, hard, nonabsorbent surface, to a height of not less than 4 feet (1219 mm) above the floor, and except for structural elements, the materials used in such walls shall be of a type that is not adversely affected by moisture.

Exception: This section does not apply to the following buildings and spaces:

1. Dwelling units and sleeping units.
2. Toilet rooms that are not accessible to the public and that have not more than one water closet.

Accessories such as grab bars, towel bars, paper dispensers and soap dishes, provided on or within walls, shall be installed and sealed to protect structural elements from moisture.

1209.2.3 Showers. Shower compartments and walls above bathtubs with installed shower heads shall be finished with a smooth, nonabsorbent surface to a height not less than 72 inches (1829 mm) above the drain inlet.

1209.2.4 Waterproof joints. Built-in tubs with showers shall have waterproof joints between the tub and adjacent wall.

[P] 1209.3 Privacy. Privacy at water closets and urinals shall be provided in accordance with Sections 1209.3.1 and 1209.3.2.

[W][P] 1209.3.1 Water closet compartment. Each water closet utilized by the public or employees shall occupy a separate compartment with walls or partitions and a door enclosing the fixtures to ensure privacy. Gender-neutral toilet room water closet compartments shall be in accordance with Section 2902.2.2.

Exceptions:

1. Water closet compartments shall not be required in a single-occupant toilet room with a lockable door.
2. Toilet rooms located in child day care facilities and containing two or more water closets shall be permitted to have one water closet without an enclosing compartment.
3. This provision is not applicable to toilet areas located within Group I-3 occupancy housing areas.

[W][P] 1209.3.2 Urinal partitions. Each urinal utilized by the public or employees shall occupy a separate area with walls or partitions to provide privacy. The walls or partitions shall begin at a height not more than 12 inches (305 mm) from and extend not less than 60 inches (1524 mm) above the finished floor surface. The walls or partitions shall extend from the wall surface at each side of the urinal not less than 18 inches (457 mm) or to a point not less than 6 inches (152 mm) beyond the outermost front lip of the urinal measured from the finished backwall surface, whichever is greater.

Exceptions:

1. Urinal partitions shall not be required in a single-occupant or family or assisted-use toilet room with a lockable door.
2. Toilet rooms located in child day care facilities and containing two or more urinals shall be permitted to have one urinal without partitions.
3. Urinals located in gender-neutral toilet facilities shall be in accordance with Section 2902.2.2.

DRAFT

CHAPTER 14

EXTERIOR WALLS

User notes:

About this chapter: *Chapter 14 addresses requirements for exterior walls of buildings. Minimum standards for wall covering materials, such as material performance and fire resistance, installation of wall coverings and the ability of the wall to provide weather protection are provided. This chapter also contains limitations on the areas and heights of combustible wall coverings based on fire separation distances, radiant heat exposure and surface burning characteristics.*

Code development reminder: *Code change proposals to sections preceded by the designation [BS] will be considered by the IBC—Structural Code Development Committee during the 2019 (Group B) Code Development Cycle. See explanation on page iv.*

SECTION 1401
GENERAL

1401.1 Scope. The provisions of this chapter shall establish the minimum requirements for *exterior walls*; *exterior wall coverings*; *exterior wall* openings; exterior windows and doors; and architectural *trim*.

SECTION 1402
PERFORMANCE REQUIREMENTS

1402.1 General. The provisions of this section shall apply to *exterior walls*, wall coverings and components thereof.

[W][S] 1402.2 Weather protection. *Exterior walls* shall provide the building with a weather-resistant *exterior wall envelope*. The *exterior wall envelope* shall include flashing, as described in Section 1404.4. The *exterior wall envelope* shall be designed and constructed in such a manner as to prevent the accumulation of water within the wall assembly by providing a *water-resistive barrier* behind the exterior veneer, as described in Section 1403.2, and a means for draining water that enters the assembly to the exterior. ((~~Protection against condensation in the *exterior wall* assembly shall be provided in accordance with Section 1404.3.~~)) An air space cavity is not required under the exterior cladding for an exterior wall clad with lapped or panel siding made of plywood, engineered wood, hardboard, or fiber cement. Protection against condensation in the exterior wall assembly shall be provided in accordance with Section 1404.3.

Exceptions:

1. A weather-resistant *exterior wall envelope* shall not be required over concrete or masonry walls designed in accordance with Chapters 19 and 21, respectively.
2. Compliance with the requirements for a means of drainage, and the requirements of Sections 1403.2 and 1404.4, shall not be required for an *exterior wall envelope* that has been demonstrated through testing to resist wind-driven rain, including joints, penetrations and intersections with dissimilar materials, in accordance with ASTM E331 under the following conditions:
   - 2.1. *Exterior wall envelope* test assemblies shall include not fewer than one opening, one control joint, one wall/eave interface and one wall sill. Tested openings and penetrations shall be representative of the intended end-use configuration.
   - 2.2. *Exterior wall envelope* test assemblies shall be not less than 4 feet by 8 feet (1219 mm by 2438 mm) in size.
   - 2.3. *Exterior wall envelope* assemblies shall be tested at a minimum differential pressure of 6.24 pounds per square foot (psf) (0.297 kN/m^2).
   - 2.4. *Exterior wall envelope* assemblies shall be subjected to a minimum test exposure duration of 2 hours.

   The *exterior wall envelope* design shall be considered to resist wind-driven rain where the results of testing indicate that water did not penetrate control joints in the *exterior wall envelope*, joints at the perimeter of openings or intersections of terminations with dissimilar materials.
3. *Exterior insulation and finish systems* (EIFS) complying with Section 1407.4.1.

Interpretation I1402.2: According to Section 1402.2, a rain screen or similar construction method is not required for most exterior siding and cladding, and single-wall construction is allowed. Drainage methods should conform to the manufacturer's installation instructions and other sections of the code.

DRAFT

Note: The "water-resistive barrier" behind the exterior wall covering provides "drainage" of the water that may enter an exterior wall envelope. If water penetrates the exterior wall covering, the felt paper or other *approved* material will direct the water to the bottom of the wall where it will escape to the exterior.

[BS] 1402.3 Structural. *Exterior walls*, and the associated openings, shall be designed and constructed to resist safely the superimposed loads required by Chapter 16.

1402.4 Fire resistance. *Exterior walls* shall be fire-resistance rated as required by other sections of this code with opening protection as required by Chapter 7.

[S] ((~~1402.5 Vertical and lateral flame propagation.~~ ~~*Exterior walls* on buildings of Type I, II, III or IV construction that are greater than 40 feet (12 192 mm) in height above grade plane and contain a combustible *water-resistive barrier* shall be tested in accordance with and comply with the acceptance criteria of NFPA 285. For the purposes of this section, *fenestration* products, flashing of *fenestration* products and *water-resistive barrier* flashing and accessories at other locations, including through wall flashings, shall not be considered part of the *water-resistive barrier*.~~

~~**Exceptions:**~~

1. ~~Walls in which the *water-resistive barrier* is the only combustible component and the *exterior wall* has a wall covering of brick, concrete, stone, terra cotta, stucco or steel with minimum thicknesses in accordance with Table 1404.2.~~
2. ~~Walls in which the *water-resistive barrier* is the only combustible component and the *water-resistive barrier* has a peak heat release rate of less than 150 kW/m^2, a total heat release of less than 20 MJ/m^2 and an effective heat of combustion of less than 18 MJ/kg as determined in accordance with ASTM E1354 and has a flame spread index of 25 or less and a smoke-developed index of 450 or less as determined in accordance with ASTM E84 or UL 723. The ASTM E1354 test shall be conducted on specimens at the thickness intended for use, in the horizontal orientation and at an incident radiant heat flux of 50 kW/m^2.~~))

[BS] 1402.6 Flood resistance. For buildings in flood hazard areas as established in Section 1612.3, *exterior walls* extending below the elevation required by Section 1612 shall be constructed with flood-damage-resistant materials.

[BS] 1402.7 Flood resistance for coastal high-hazard areas and coastal A zones. For buildings in coastal high-hazard areas and coastal A zones as established in Section 1612.3, electrical, mechanical and plumbing system components shall not be mounted on or penetrate through *exterior walls* that are designed to break away under flood loads.

DRAFT

SECTION 1403
MATERIALS

1403.1 General. Materials used for the construction of *exterior walls* shall comply with the provisions of this section. Materials not prescribed herein shall be permitted, provided that any such alternative has been *approved*.

1403.2 Water-resistive barrier. Not fewer than one layer of No.15 asphalt felt, complying with ASTM D226 for Type 1 felt or other *approved* materials, shall be attached to the studs or sheathing, with flashing as described in Section 1404.4, in such a manner as to provide a continuous *water-resistive barrier* behind the *exterior wall* veneer.

[BS] 1403.3 Wood. *Exterior walls* of wood construction shall be designed and constructed in accordance with Chapter 23.

[BS] 1403.3.1 Basic hardboard. Basic hardboard shall conform to the requirements of ANSI A135.4.

[BS] 1403.3.2 Hardboard siding. Hardboard siding shall conform to the requirements of ANSI A135.6 and, where used structurally, shall be so identified by the *label* of an *approved* agency.

[BS] 1403.4 Masonry. *Exterior walls* of masonry construction shall be designed and constructed in accordance with this section and Chapter 21. Masonry units, mortar and metal accessories used in anchored and adhered veneer shall meet the physical requirements of Chapter 21. The backing of anchored and adhered veneer shall be of concrete, masonry, steel framing or wood framing. Continuous insulation meeting the applicable requirements of this code shall be permitted between the backing and the masonry veneer.

[BS] 1403.5 Metal. *Exterior walls* constructed of cold-formed steel, structural steel or aluminum shall be designed in accordance with Chapters 22 and 20, respectively.

[BS] 1403.5.1 Aluminum siding. Aluminum siding shall conform to the requirements of AAMA 1402.

[BS] 1403.5.2 Cold-rolled copper. Copper shall conform to the requirements of ASTM B370.

[BS] 1403.5.3 Lead-coated copper. Lead-coated copper shall conform to the requirements of ASTM B101.

[BS] 1403.6 Concrete. *Exterior walls* of concrete construction shall be designed and constructed in accordance with Chapter 19.

[BS] 1403.7 Glass-unit masonry. *Exterior walls* of glass-unit masonry shall be designed and constructed in accordance with Chapter 21.

1404.3 Vapor retarders. Vapor retarders as described in Section 1404.3.3 shall be provided in accordance with Sections 1404.3.1 and 1404.3.2, or an approved design using accepted engineering practice for hygrothermal analysis.

[S] 1404.3.1 Class I and II vapor retarders. ((~~Class I and II vapor retarders shall not be provided on the interior side of frame walls in Zones 1 and 2. Class I vapor retarders shall not be provided on the interior side of frame walls in Zones 3 and 4 other than Marine 4.~~)) Class I or II vapor retarders shall be provided on the interior side of frame walls. ((~~in Zones 5, 6, 7, 8 and Marine 4. The appropriate zone shall be selected in accordance with Chapter 3 [CE] of the *International Energy Conservation Code-Commercial Provisions*.~~))

Exceptions:

1. Basement walls.
2. Below-grade portion of any wall.
3. Construction where moisture or its freezing will not damage the materials.
4. Conditions where Class III vapor retarders are required in Section 1404.3.2.

1404.3.2 Class III vapor retarders. Class III vapor retarders shall be permitted where any one of the conditions in Table 1404.3.2 is met. Only Class III vapor retarders shall be used on the interior side of frame walls where foam plastic insulating sheathing with a perm rating of less than 1 is applied in accordance with Table 1404.3.2 on the exterior side of the frame wall.

[S] TABLE 1404.3.2
CLASS III VAPOR RETARDERS

ZONE	CLASS III VAPOR RETARDERS PERMITTED FOR:[a]
Marine 4	Vented cladding over wood structural panels Vented cladding over fiberboard Vented cladding over gypsum Continuous insulation with *R*-value ≥ R2.5 over 2 × 4 wall Continuous insulation with *R*-value ≥ R3.75 over 2 × 6 wall
((~~5~~	~~Vented cladding over wood structural panels~~ ~~Vented cladding over fiberboard~~ ~~Vented cladding over gypsum~~ ~~Continuous insulation with *R*-value ≥ R5 over 2 × 4 wall~~ ~~Continuous insulation with *R*-value ≥ R7.5 over 2 × 6 wall~~
~~6~~	~~Vented cladding over fiberboard~~ ~~Vented cladding over gypsum~~ ~~Continuous insulation with *R*-value ≥ R7.5 over 2 × 4 wall~~ ~~Continuous insulation with *R*-value ≥ R11.25 over 2 × 6 wall~~
~~7 and 8~~	~~Continuous insulation with *R*-value ≥ R10 over 2 × 4 wall~~ ~~Continuous insulation with *R*-value ≥ R15 over 2 × 6 wall~~))

a. Spray foam with a maximum permanence of 1.5 perms at the installed thickness applied to the interior cavity side of wood structural panels, fiberboard, insulating sheathing or gypsum is deemed to meet the continuous insulation requirement where the spray foam *R*-value meets or exceeds the specified insulating sheathing *R*-value.

1404.3.3 Material vapor retarder class. The *vapor retarder class* shall be based on the manufacturer's certified testing or a tested assembly.

The following shall be deemed to meet the class specified:

Class I: Sheet polyethylene, nonperforated aluminum foil with a perm rating of less than or equal to 0.1.

Class II: Kraft-faced fiberglass batts or paint with a perm rating greater than 0.1 and less than or equal to 1.0.

Class III: Latex or enamel paint with a perm rating of greater than 1.0 and less than or equal to 10.0.

Note: Minimum perm ratings for vapor retarders are specified in the definition of "vapor retarder class" in chapter 2.

1404.3.4 Minimum clear airspaces and vented openings for vented cladding. For the purposes of this section, vented cladding shall include the following minimum clear airspaces:

1. Vinyl, polypropylene or horizontal aluminum siding applied over a weather-resistive barrier as specified in this chapter.
2. Brick veneer with a clear airspace as specified in this code.
3. Other *approved* vented claddings.

DRAFT

SECTION 1407
EXTERIOR INSULATION AND FINISH SYSTEMS (EIFS)

1407.1 General. The provisions of this section shall govern the materials, construction and quality of *exterior insulation and finish systems* (EIFS) for use as *exterior wall coverings* in addition to other applicable requirements of Chapters 7, 14, 16, 17 and 26.

1407.2 Performance characteristics. EIFS shall be constructed such that it meets the performance characteristics required in ASTM E2568.

[BS] 1407.3 Structural design. The underlying structural framing and substrate shall be designed and constructed to resist loads as required by Chapter 16.

1407.4 Weather resistance. EIFS shall comply with Section 1402 and shall be designed and constructed to resist wind and rain in accordance with this section and the manufacturer's application instructions.

1407.4.1 EIFS with drainage. EIFS with drainage shall have an average minimum drainage efficiency of 90 percent when tested in accordance the requirements of ASTM E2273 and is required on framed walls of Type V construction, Group R1, R2, R3 and R4 occupancies.

1407.4.1.1 Water-resistive barrier. For EIFS with drainage, the *water-resistive barrier* shall comply with Section 1403.2 or ASTM E2570.

1407.5 Installation. Installation of the EIFS and EIFS with drainage shall be in accordance with the EIFS manufacturer's instructions.

[S] ((~~1407.6 Special inspections.~~ ~~EIFS installations shall comply with the provisions of Sections 1704.2 and 1705.16.~~))

SECTION 1408
HIGH-PRESSURE DECORATIVE EXTERIOR-GRADE COMPACT LAMINATES (HPL)

1408.1 General. The provisions of this section shall govern the materials, construction and quality of High-Pressure Decorative *Exterior-Grade Compact Laminates (HPL)* for use as *exterior wall coverings* in addition to other applicable requirements of Chapters 14 and 16.

1408.2 Exterior wall finish. HPL used as *exterior wall covering* or as elements of balconies and similar projections and bay and oriel windows to provide cladding or weather resistance shall comply with Sections 1408.4 through 1408.14.

1408.3 Architectural trim and embellishments. HPL used as architectural trim or embellishments shall comply with Sections 1408.7 through 1408.14.

[BS] 1408.4 Structural design. HPL systems shall be designed and constructed to resist wind loads as required by Chapter 16 for components and cladding.

1408.5 Approval. Results of approved tests or an engineering analysis shall be submitted to the building official to verify compliance with the requirements of Chapter 16 for wind loads.

1408.6 Weather resistance. HPL systems shall comply with Section 1402 and shall be designed and constructed to resist wind and rain in accordance with this section and the manufacturer's instructions.

1408.7 Durability. HPL systems shall be constructed of approved materials that maintain the performance characteristics required in Section 1408 for the duration of use.

1408.8 Fire-resistance rating. Where HPL systems are used on *exterior walls* required to have a *fire-resistance rating* in accordance with Section 705, evidence shall be submitted to the building official that the required *fire-resistance rating* is maintained.

Exception: HPL systems not containing foam plastic insulation, which are installed on the outer surface of a fire-resistance-rated *exterior wall* in a manner such that the attachments do not penetrate through the entire *exterior wall* assembly, shall not be required to comply with this section.

1408.9 Surface-burning characteristics. Unless otherwise specified, HPL shall have a flame spread index of 75 or less and a smoke-developed index of 450 or less when tested in the minimum and maximum thicknesses intended for use in accordance with ASTM E84 or UL 723.

1408.10 Type I, II, III and IV construction. Where installed on buildings of Type I, II, III and IV construction, HPL systems shall comply with Sections 1408.10.1 through 1408.10.4, or Section 1408.11.

1408.10.1 Surface-burning characteristics. HPL shall have a flame spread index of not more than 25 and a smoke-developed index of not more than 450 when tested in the minimum and maximum thicknesses intended for use in accordance with ASTM E84 or UL 723.

DRAFT

CHAPTER 15

ROOF ASSEMBLIES AND ROOFTOP STRUCTURES

User notes:

About this chapter: *Chapter 15 provides minimum requirements for the design and construction of roof assemblies and rooftop structures. The criteria address the weather-protective barrier at the roof and, in most circumstances, a fire-resistant barrier. The chapter is largely prescriptive in nature and is based on decades of experience with various traditional materials, but it also recognizes newer products such as photovoltaic shingles. Section 1510 addresses rooftop structures, which include penthouses, tanks, towers and spires. Rooftop penthouses larger than prescribed in this chapter must be treated as a story under Chapter 5.*

Code development reminder: *Code change proposals to sections preceded by the designation [BF], [BG] or [P] will be considered by one of the code development committees meeting during the 2018 (Group A) Code Development Cycle. All other code change proposals will be considered by the IBC—Structural Code Development Committee during the 2019 (Group B) Code Development Cycle. See explanation on page iv.*

SECTION 1501
GENERAL

1501.1 Scope. The provisions of this chapter shall govern the design, materials, construction and quality of roof assemblies, and rooftop structures.

SECTION 1502
ROOF DRAINAGE

[S][P] 1502.1 General. Design and installation of roof drainage systems shall comply with Section 1502 of this code and Sections 1106 and 1108, as applicable, of the ((~~*International*~~)) *Uniform Plumbing Code.*

[S][P] 1502.2 Secondary (emergency overflow) drains or scuppers. Where roof drains are required, secondary (emergency overflow) roof drains or scuppers shall be provided where the roof perimeter construction extends above the roof in such a manner that water will be entrapped if the primary drains allow buildup for any reason. The installation and sizing of secondary emergency overflow drains, leaders and conductors shall comply with Sections 1106 and 1108, as applicable, of the ((~~*International*~~)) *Uniform Plumbing Code.*

1502.3 Scuppers. Where scuppers are used for secondary (emergency overflow) roof drainage, the quantity, size, location and inlet elevation of the scuppers shall be sized to prevent the depth of ponding water from exceeding that for which the roof was designed as determined by Section 1611.1. Scuppers shall not have an opening dimension of less than 4 inches (102 mm). The flow through the primary system shall not be considered when locating and sizing scuppers.

1502.4 Gutters. Gutters and leaders placed on the outside of buildings, other than Group R-3, private garages and buildings of Type V construction, shall be of noncombustible material or not less than Schedule 40 plastic pipe.

SECTION 1503
WEATHER PROTECTION

1503.1 General. Roof decks shall be covered with *approved* roof coverings secured to the building or structure in accordance with the provisions of this chapter. Roof coverings shall be designed in accordance with this code, and installed in accordance with this code and the manufacturer's *approved* instructions.

1503.2 Flashing. Flashing shall be installed in such a manner so as to prevent water from entering the wall and roof through joints in copings, through moisture-permeable materials and at intersections with parapet walls and other penetrations through the roof plane.

1503.2.1 Locations. Flashing shall be installed at wall and roof intersections, at gutters, wherever there is a change in roof slope or direction and around roof openings. Where flashing is of metal, the metal shall be corrosion resistant with a thickness of not less than 0.019 inch (0.483 mm) (No. 26 galvanized sheet).

1503.3 Coping. Parapet walls shall be properly coped with noncombustible, weatherproof materials of a width not less than the thickness of the parapet wall.

1503.4 Attic and rafter ventilation. Intake and exhaust vents shall be provided in accordance with Section 1202.2 and the vent product manufacturer's installation instructions.

DRAFT

SECTION 1505
FIRE CLASSIFICATION

[BF] 1505.1 General. Roof assemblies shall be divided into the classes defined in this section. Class A, B and C roof assemblies and roof coverings required to be listed by this section shall be tested in accordance with ASTM E108 or UL 790. In addition, *fire-retardant-treated wood* roof coverings shall be tested in accordance with ASTM D2898. The minimum roof coverings installed on buildings shall comply with Table 1505.1 based on the type of construction of the building.

Exception: Skylights and sloped glazing that comply with Chapter 24 or Section 2610.

[BF] 1505.2 Class A roof assemblies. Class A roof assemblies are those that are effective against severe fire test exposure. Class A roof assemblies and roof coverings shall be *listed* and identified as Class A by an *approved* testing agency. Class A roof assemblies shall be permitted for use in buildings or structures of all types of construction.

Exceptions:

1. Class A roof assemblies include those with coverings of brick, masonry or an exposed concrete roof deck.
2. Class A roof assemblies also include ferrous or copper shingles or sheets, metal sheets and shingles, clay or concrete roof tile or slate installed on noncombustible decks or ferrous, copper or metal sheets installed without a roof deck on noncombustible framing.
3. Class A roof assemblies include minimum 16 ounce per square foot (0.0416 kg/m^2) copper sheets installed over combustible decks.
4. Class A roof assemblies include slate installed over ASTM D226, Type II underlayment over combustible decks.

[S] TABLE 1505.1[a, b]
MINIMUM ROOF COVERING CLASSIFICATION FOR TYPES OF CONSTRUCTION

IA	IB	IIA	IIB	IIIA	IIIB	IV	VA	VB
B	B	B	C[c]	B	C[c]	B	B	C[c]

For SI: 1 foot = 304.8 mm, 1 square foot = 0.0929 m^2.

((~~a. Unless otherwise required in accordance with the *International Wildland-Urban Interface Code* or due to the location of the building within a fire district in accordance with Appendix D.~~

~~b~~)) a. Nonclassified roof coverings shall be permitted on buildings of Group R-3 and Group U occupancies, where there is a minimum fire-separation distance of 6 feet measured from the leading edge of the roof.

((~~c~~)) b. Buildings that are not more than two stories above grade plane and having not more than 6,000 square feet of projected roof area and where there is a minimum 10-foot fire-separation distance from the leading edge of the roof to a lot line on all sides of the building, except for street fronts or public ways, shall be permitted to have roofs of No. 1 cedar or redwood shakes and No. 1 shingles constructed in accordance with Section 1505.7.

[BF] 1505.3 Class B roof assemblies. Class B roof assemblies are those that are effective against moderate fire-test exposure. Class B roof assemblies and roof coverings shall be *listed* and identified as Class B by an *approved* testing agency.

[BF] 1505.4 Class C roof assemblies. Class C roof assemblies are those that are effective against light fire-test exposure. Class C roof assemblies and roof coverings shall be *listed* and identified as Class C by an *approved* testing agency.

[BF] 1505.5 Nonclassified roofing. Nonclassified roofing is *approved* material that is not *listed* as a Class A, B or C roof covering.

[BF] 1505.6 Fire-retardant-treated wood shingles and shakes. *Fire-retardant-treated wood* shakes and shingles shall be treated by impregnation with chemicals by the full-cell vacuum-pressure process, in accordance with AWPA C1. Each bundle shall be marked to identify the manufactured unit and the manufacturer, and shall be *labeled* to identify the classification of the material in accordance with the testing required in Section 1505.1, the treating company and the quality control agency.

[BF] 1505.7 Special purpose roofs. Special purpose wood shingle or wood shake roofing shall conform to the grading and application requirements of Section 1507.8 or 1507.9. In addition, an underlayment of 5/8-inch (15.9 mm) Type X water-resistant gypsum backing board or gypsum sheathing shall be placed under minimum nominal 1/2-inch-thick (12.7 mm) wood structural panel solid sheathing or 1-inch (25 mm) nominal spaced sheathing.

[BF] 1505.8 Building-integrated photovoltaic products. *Building-integrated photovoltaic products* installed as the roof covering shall be tested, *listed* and *labeled* for fire classification in accordance with Section 1505.1.

[BF] 1505.9 Rooftop mounted photovoltaic panel systems. Rooftop rack-mounted *photovoltaic panel systems* shall be tested, *listed* and identified with a fire classification in accordance with UL 1703 and UL 2703. The fire classification shall comply with Table 1505.1 based on the type of construction of the building.

[BF] 1505.10 Roof gardens and landscaped roofs. Roof gardens and landscaped roofs shall comply with Section 1505.1 and 1507.16 and shall be installed in accordance with ANSI/SPRI VF-1.

DRAFT

[BF] TABLE 1508.2
MATERIAL STANDARDS FOR ROOF INSULATION

Cellular glass board	ASTM C552
Composite boards	ASTM C1289, Type III, IV, V or VII
Expanded polystyrene	ASTM C578
Extruded polystyrene	ASTM C578
Fiber-reinforced gypsum board	ASTM C1278
Glass-faced gypsum board	ASTM C1177
High-density polyisocyanurate board	ASTM C1289, Type II, Class 4
Mineral fiber insulation board	ASTM C726
Perlite board	ASTM C728
Polyisocyanurate board	ASTM C1289, Type I or II
Wood fiberboard	ASTM C208, Type II

SECTION 1509
RADIANT BARRIERS INSTALLED ABOVE DECK

[BF] 1509.1 General. A *radiant barrier* installed above a deck shall comply with Sections 1509.2 through 1509.4.

[BF] 1509.2 Fire testing. *Radiant barriers* shall be permitted for use above decks where the *radiant barrier* is covered with an approved roof covering and the system consisting of the *radiant barrier* and the roof covering complies with the requirements of either FM 4450 or UL 1256.

[BF] 1509.3 Installation. The low emittance surface of the *radiant barrier* shall face the continuous airspace between the *radiant barrier* and the roof covering.

[BF] 1509.4 Material standards. A *radiant barrier* installed above a deck shall comply with ASTM C1313/1313M.

DRAFT

SECTION 1510
ROOFTOP STRUCTURES

[BG] 1510.1 General. The provisions of this section shall govern the construction of rooftop structures.

1510.1.1 Area limitation. The aggregate area of penthouses and other enclosed rooftop structures shall not exceed one-third the area of the supporting roof deck. Such penthouses and other enclosed rooftop structures shall not be required to be included in determining the building area or number of stories as regulated by Section 503.1. The area of such penthouses shall not be included in determining the fire area specified in Section 901.7.

[BG] 1510.2 Penthouses. Penthouses in compliance with Sections 1510.2.1 through 1510.2.4 shall be considered as a portion of the story directly below the roof deck on which such penthouses are located. Other penthouses shall be considered as an additional story of the building.

[BG] 1510.2.1 Height above roof deck. Penthouses constructed on buildings of other than Type I construction shall not exceed 18 feet (5486 mm) in height above the roof deck as measured to the average height of the roof of the penthouse. Penthouses located on the roof of buildings of Type I construction shall not be limited in height.

Exception: Where used to enclose tanks or elevators that travel to the roof level, penthouses shall be permitted to have a maximum height of 28 feet (8534 mm) above the roof deck.

[S][BG] 1510.2.2 Use limitations. Penthouses shall not be used for purposes other than the shelter of mechanical or electrical equipment, tanks, elevators and related machinery, exit stairways or vertical shaft openings in the roof assembly.

[BG] 1510.2.3 Weather protection. Provisions such as louvers, louver blades or flashing shall be made to protect the mechanical and electrical equipment and the building interior from the elements.

[BG] 1510.2.4 Type of construction. Penthouses shall be constructed with walls, floors and roofs as required for the type of construction of the building on which such penthouses are built.

Exceptions:

1. On buildings of Type I construction, the exterior walls and roofs of penthouses with a *fire separation distance* greater than 5 feet (1524 mm) and less than 20 feet (6096 mm) shall be permitted to have not less than a 1-hour fire-

[BG] 1510.6.2 Type I, II, III or IV construction. Regardless of the requirements in Section 1510.6, *mechanical equipment screens* that are located on the roof decks of buildings of Type I, II, III or IV construction shall be permitted to be constructed of combustible materials in accordance with any one of the following limitations:

1. The fire separation distance shall be not less than 20 feet (6096 mm) and the height of the *mechanical equipment screen* above the roof deck shall not exceed 4 feet (1219 mm) as measured to the highest point on the *mechanical equipment screen*.
2. The fire separation distance shall be not less than 20 feet (6096 mm) and the *mechanical equipment screen* shall be constructed of fire-retardant-treated wood complying with Section 2303.2 for exterior installation.
3. Where exterior wall covering panels are used, the panels shall have a flame spread index of 25 or less when tested in the minimum and maximum thicknesses intended for use, with each face tested independently in accordance with ASTM E84 or UL 723. The panels shall be tested in the minimum and maximum thicknesses intended for use in accordance with, and shall comply with the acceptance criteria of, NFPA 285 and shall be installed as tested. Where the panels are tested as part of an exterior wall assembly in accordance with NFPA 285, the panels shall be installed on the face of the *mechanical equipment screen* supporting structure in the same manner as they were installed on the tested exterior wall assembly.

[BG] 1510.6.3 Type V construction. The height of mechanical equipment screens located on the roof decks of buildings of Type V construction, as measured from grade plane to the highest point on the mechanical equipment screen, shall be permitted to exceed the maximum building height allowed for the building by other provisions of this code where complying with any one of the following limitations, provided that the fire separation distance is greater than 5 feet (1524 mm):

1. Where the fire separation distance is not less than 20 feet (6096 mm), the height above grade plane of the mechanical equipment screen shall not exceed 4 feet (1219 mm) more than the maximum building height allowed.
2. The *mechanical equipment screen* shall be constructed of noncombustible materials.
3. The *mechanical equipment screen* shall be constructed of fire-retardant-treated wood complying with Section 2303.2 for exterior installation.
4. Where the fire separation distance is not less than 20 feet (6096 mm), the *mechanical equipment screen* shall be constructed of materials having a flame spread index of 25 or less when tested in the minimum and maximum thicknesses intended for use with each face tested independently in accordance with ASTM E84 or UL 723.

[BG] 1510.7 Photovoltaic panels and modules. Rooftop-mounted *photovoltaic panels* and *modules* shall be designed in accordance with this section.

[BG] 1510.7.1 Fire classification. Rooftop-mounted *photovoltaic panels* and *modules* shall have the fire classification in accordance with Section 1505.9.

[BG] 1510.7.2 Photovoltaic panels and modules. Rooftop-mounted *photovoltaic panels* and *modules* shall be *listed* and labeled in accordance with UL 1703 and shall be installed in accordance with the manufacturer's instructions.

[BG] 1510.8 Other rooftop structures. Rooftop structures not regulated by Sections 1510.2 through 1510.7 shall comply with Sections 1510.8.1 through 1510.8.5, as applicable.

[BG] 1510.8.1 Aerial supports. Aerial supports shall be constructed of noncombustible materials.

Exception: Aerial supports not greater than 12 feet (3658 mm) in height as measured from the roof deck to the highest point on the aerial supports shall be permitted to be constructed of combustible materials.

[BG] 1510.8.2 Bulkheads. Bulkheads used for the shelter of mechanical or electrical equipment or vertical shaft openings in the roof assembly shall comply with Section 1510.2 as penthouses. Bulkheads used for any other purpose shall be considered as an additional story of the building.

[BG] 1510.8.3 Dormers. Dormers shall be of the same type of construction as required for the roof in which such dormers are located or the exterior walls of the building.

[BG] 1510.8.4 Fences. Fences and similar structures shall comply with Section 1510.6 as *mechanical equipment screens*.

[BG] 1510.8.5 Flagpoles. Flagpoles and similar structures shall not be required to be constructed of noncombustible materials and shall not be limited in height or number.

[S] ((~~[BG] 1510.9 Structural fire resistance.~~ ~~The structural frame and roof construction supporting loads imposed upon the roof by any rooftop structure shall comply with the requirements of Table 601. The fire-resistance reduction permitted by Table 601, Note a, shall not apply to roofs containing rooftop structures.~~))

DRAFT

SECTION 1511
REROOFING

Note: See International Energy Conservation Code for insulation requirements for reroofing.

1511.1 General. Materials and methods of application used for recovering or replacing an existing roof covering shall comply with the requirements of Chapter 15.

Exceptions:

1. *Roof replacement* or *roof recover* of existing low-slope roof coverings shall not be required to meet the minimum design slope requirement of one-quarter unit vertical in 12 units horizontal (2-percent slope) in Section 1507 for roofs that provide positive roof drainage.
2. Recovering or replacing an existing roof covering shall not be required to meet the requirement for secondary (emergency overflow) drains or scuppers in Section 1502.2 for roofs that provide for positive roof drainage. For the purposes of this exception, existing secondary drainage or scupper systems required in accordance with this code shall not be removed unless they are replaced by secondary drains or scuppers designed and installed in accordance with Section 1502.2.

1511.2 Structural and construction loads. Structural roof components shall be capable of supporting the roof-covering system and the material and equipment loads that will be encountered during installation of the system.

1511.3 Roof replacement. *Roof replacement* shall include the removal of all existing layers of roof coverings down to the roof deck.

Exception: Where the existing roof assembly includes an ice barrier membrane that is adhered to the roof deck, the existing ice barrier membrane shall be permitted to remain in place and covered with an additional layer of ice barrier membrane in accordance with Section 1507.

1511.3.1 Roof recover. The installation of a new roof covering over an existing roof covering shall be permitted where any of the following conditions occur:

1. Where the new roof covering is installed in accordance with the roof covering manufacturer's approved instructions.
2. Complete and separate roofing systems, such as standing-seam metal roof panel systems, that are designed to transmit the roof loads directly to the building's structural system and that do not rely on existing roofs and roof coverings for support, shall not require the removal of existing roof coverings.
3. Metal panel, metal shingle and concrete and clay tile roof coverings shall be permitted to be installed over existing wood shake roofs when applied in accordance with Section 1511.4.
4. The application of a new protective roof coating over an existing protective roof coating, metal roof panel, built-up roof, spray polyurethane foam roofing system, metal roof shingles, mineral-surfaced roll roofing, modified bitumen roofing or thermoset and thermoplastic single-ply roofing shall be permitted without tear off of existing roof coverings.

1511.3.1.1 Exceptions. A *roof recover* shall not be permitted where any of the following conditions occur:

1. Where the existing roof or roof covering is water soaked or has deteriorated to the point that the existing roof or roof covering is not adequate as a base for additional roofing.
2. Where the existing roof covering is slate, clay, cement or asbestos-cement tile.
3. Where the existing roof has two or more applications of any type of roof covering.

1511.4 Roof recovering. Where the application of a new roof covering over wood shingle or shake roofs creates a combustible concealed space, the entire existing surface shall be covered with gypsum board, mineral fiber, glass fiber or other *approved* materials securely fastened in place.

1511.5 Reinstallation of materials. Existing slate, clay or cement tile shall be permitted for reinstallation, except that damaged, cracked or broken slate or tile shall not be reinstalled. Existing vent flashing, metal edgings, drain outlets, collars and metal counterflashings shall not be reinstalled where rusted, damaged or deteriorated. Aggregate surfacing materials shall not be reinstalled.

1511.6 Flashings. Flashings shall be reconstructed in accordance with *approved* manufacturer's installation instructions. Metal flashing to which bituminous materials are to be adhered shall be primed prior to installation.

SECTION 1512
PHOTOVOLTAIC PANELS AND MODULES

1512.1 Photovoltaic panels and modules. *Photovoltaic panels* and *modules* installed on a roof or as an integral part of a roof assembly shall comply with the requirements of this code and the *International Fire Code*.

DRAFT

CHAPTER 16

STRUCTURAL DESIGN

User notes:

About this chapter: *Chapter 16 establishes minimum design requirements so that the structural components of buildings are proportioned to resist the loads that are likely to be encountered. In addition, this chapter assigns buildings and structures to risk categories that are indicative of their intended use. The loads specified herein along with the required load combinations have been established through research and service performance of buildings and structures. The application of these loads and adherence to the serviceability criteria enhances the protection of life and property.*

Code development reminder: *Code change proposals to this chapter will be considered by the IBC—Structural Code Development Committee during the 2019 (Group B) Code Development Cycle. See explanation on page iv.*

SECTION 1601
GENERAL

[S] 1601.1 Scope. The provisions of this chapter shall govern the structural design of buildings, structures and portions thereof regulated by this code.

Exceptions:

1. Carports are not required to comply with this chapter if they satisfy all the following criteria:
   - 1.1. Accessory to Group R-3 occupancies,
   - 1.2. Used to shelter only vehicles, trailers or vessels,
   - 1.3. Constructed of metal, plastic or fabric,
   - 1.4. No more than 3 pounds per square foot in total weight, and
   - 1.5. No more than 300 square feet covered area.
2. Temporary tents and similar structures are not required to comply with this chapter if they satisfy all the following criteria:
   - 2.1 The occupant load is less than 100;
   - 2.2 The structure is fully or partially enclosed and 400 square feet or less in area; or are entirely unenclosed and 700 square feet or less in area;
   - 2.3 The structure is constructed of metal, plastic or fabric; and
   - 2.4 The structure is no more than 3 pounds per square foot in total weight.

DRAFT

SECTION 1602
NOTATIONS

1602.1 Notations. The following notations are used in this chapter:

D = Dead load.

D_i = Weight of ice in accordance with Chapter 10 of ASCE 7.

E = Combined effect of horizontal and vertical earthquake induced forces as defined in Section 2.3.6 of ASCE 7.

F = Load due to fluids with well-defined pressures and maximum heights.

F_a = Flood load in accordance with Chapter 5 of ASCE 7.

H = Load due to lateral earth pressures, ground water pressure or pressure of bulk materials.

L = Roof live load greater than 20 psf (0.96 kN/m^2) and floor live load.

L_r = Roof live load of 20 psf (0.96 kN/m^2) or less.

R = Rain load.

S = Snow load.

T = Cumulative effects of self-straining load forces and effects.

V_{asd} = Allowable stress design wind speed, miles per hour (mph) (km/hr) where applicable.

V = Basic design wind speeds, miles per hour (mph) (km/hr) determined from Figures 1609.3(1) through 1609.3(8) or ASCE 7.

W = Load due to wind pressure.

W_i = Wind-on-ice in accordance with Chapter 10 of ASCE 7.

SECTION 1603
CONSTRUCTION DOCUMENTS

[S] 1603.1 General. *Construction documents* shall show the size, section and relative locations of structural members with floor levels, column centers and offsets dimensioned. The design loads and other information pertinent to the structural design required by Sections 1603.1.1 through 1603.1.9 shall be indicated on the *construction documents*.

Exception: *Construction documents* for buildings constructed in accordance with the *conventional light-frame construction* provisions of Section 2308 shall indicate the following structural design information:

1. Floor and roof dead and live loads.
2. ((~~Ground snow~~)) Snow load. ((~~, p_g.~~))
3. Basic design wind speed, V, miles per hour (mph) (km/hr) and allowable stress design wind speed, V_{asd}, as determined in accordance with Section 1609.3.1 and wind exposure.
4. *Seismic design category* and *site class*.
5. Flood design data, if located in *flood hazard areas* established in Section 1612.3.
6. Design load-bearing values of soils.
7. Rain load data.

1603.1.1 Floor live load. The uniformly distributed, concentrated and impact floor live load used in the design shall be indicated for floor areas. Use of live load reduction in accordance with Section 1607.11 shall be indicated for each type of live load used in the design.

[S] 1603.1.2 Roof and snow live load. The roof and snow live load used in the design shall be indicated for roof areas (Sections 1607.13 and 1608).

[S] 1603.1.3 ((~~Roof snow load data~~)) Reserved. ((~~The ground snow load, p_g, shall be indicated. In areas where the ground snow load, p_g, exceeds 10 pounds per square foot (psf) (0.479 kN/m^2), the following additional information shall also be provided, regardless of whether snow loads govern the design of the roof:~~

~~1. Flat-roof snow load, p_f.~~

~~2. Snow exposure factor, C_e.~~

~~3. Snow load importance factor, I_s.~~

~~4. Thermal factor, C_t.~~

~~5. Slope factor(s), C_s.~~

~~6. Drift surcharge load(s), p_d, where the sum of p_d and p_f exceeds 20 psf (0.96 kN/m^2).~~

~~7. Width of snow drift(s), w.~~))

1603.1.4 Wind design data. The following information related to wind loads shall be shown, regardless of whether wind loads govern the design of the lateral force-resisting system of the structure:

1. Basic design wind speed, V, miles per hour and allowable stress design wind speed, V_{asd}, as determined in accordance with Section 1609.3.1.
2. *Risk category*.
3. Wind exposure. Applicable wind direction if more than one wind exposure is utilized.
4. Applicable internal pressure coefficient.
5. Design wind pressures to be used for exterior component and cladding materials not specifically designed by the *registered design professional* responsible for the design of the structure, psf (kN/m^2).

1603.1.5 Earthquake design data. The following information related to seismic loads shall be shown, regardless of whether seismic loads govern the design of the lateral force-resisting system of the structure:

1. *Risk category*.
2. Seismic importance factor, I_e.

DRAFT

3. Mapped spectral response acceleration parameters, S_S and S_1.
4. *Site class*.
5. Design spectral response acceleration parameters, S_{DS} and S_{D1}.
6. *Seismic design category*.
7. Basic seismic force-resisting system(s).
8. Design base shear(s).
9. Seismic response coefficient(s), *CS*.
10. Response modification coefficient(s), *R*.
11. Analysis procedure used.

1603.1.6 Geotechnical information. The design load-bearing values of soils shall be shown on the *construction documents*.

1603.1.7 Flood design data. For buildings located in whole or in part in *flood hazard areas* as established in Section 1612.3, the documentation pertaining to design, if required in Section 1612.4, shall be included and the following information, referenced to the datum on the community's Flood Insurance Rate Map (FIRM), shall be shown, regardless of whether flood loads govern the design of the building:

1. Flood design class assigned according to ASCE 24.
2. In *flood hazard areas* other than *coastal high hazard areas* or *coastal A zones*, the elevation of the proposed lowest floor, including the basement.
3. In *flood hazard areas* other than *coastal high hazard areas* or *coastal A zones*, the elevation to which any nonresidential building will be dry floodproofed.
4. In *coastal high hazard areas* and *coastal A zones*, the proposed elevation of the bottom of the lowest horizontal structural member of the lowest floor, including the basement.

1603.1.8 Special loads. Special loads that are applicable to the design of the building, structure or portions thereof, including but not limited to the loads of machinery or equipment, and that are greater than specified floor and roof loads shall be specified by their descriptions and locations.

1603.1.8.1 Photovoltaic panel systems. The dead load of rooftop-mounted *photovoltaic panel systems*, including rack support systems, shall be indicated on the construction documents.

Note: Floor and roof design load provisions regarding posting of live loads, issuance of certificates of occupancy and restrictions on loading are located in Section 107 Floor and Roof Design Loads.

1603.1.9 Roof rain load data. Rain intensity, *i* (in/hr) (cm/hr), shall be shown regardless of whether rain loads govern the design.

DRAFT

SECTION 1604
GENERAL DESIGN REQUIREMENTS

1604.1 General. Building, structures and parts thereof shall be designed and constructed in accordance with strength design, *load and resistance factor design*, *allowable stress design*, empirical design or conventional construction methods, as permitted by the applicable material chapters and referenced standards.

1604.2 Strength. Buildings and other structures, and parts thereof, shall be designed and constructed to support safely the factored loads in load combinations defined in this code without exceeding the appropriate strength limit states for the materials of construction. Alternatively, buildings and other structures, and parts thereof, shall be designed and constructed to support safely the *nominal loads* in load combinations defined in this code without exceeding the appropriate specified allowable stresses for the materials of construction.

Loads and forces for occupancies or uses not covered in this chapter shall be subject to the approval of the *building official*.

1604.3 Serviceability. Structural systems and members thereof shall be designed to have adequate stiffness to limit deflections as indicated in Table 1604.3. Drift limits applicable to earthquake loading shall be in accordance with ASCE 7 Chapter 12, 13, 15 or 16, as applicable.

[W] TABLE 1604.5
RISK CATEGORY OF BUILDINGS AND OTHER STRUCTURES

RISK CATEGORY	NATURE OF OCCUPANCY
I	Buildings and other structures that represent a low hazard to human life in the event of failure, including but not limited to: • Agricultural facilities. • Certain temporary facilities. • Minor storage facilities.
II	Buildings and other structures except those listed in Risk Categories I, III and IV.
III	Buildings and other structures that represent a substantial hazard to human life in the event of failure, including but not limited to: • Buildings and other structures whose primary occupancy is public assembly with an occupant load greater than 300. • Buildings and other structures containing Group E occupancies with an occupant load greater than 250. • Buildings and other structures containing educational occupancies for students above the 12th grade with an occupant load greater than 500. • Group I-2, Condition 1 occupancies with 50 or more care recipients. • Group I-2, Condition 2 occupancies not having emergency surgery or emergency treatment facilities. • Group I-3 occupancies. • Any other occupancy with an occupant load greater than 5,000.[a] • Power-generating stations, water treatment facilities for potable water, wastewater treatment facilities and other public utility facilities not included in Risk Category IV. • Buildings and other structures not included in Risk Category IV containing quantities of toxic or explosive materials that: Exceed maximum allowable quantities per control area as given in Table 307.1(1) or 307.1(2) or per outdoor control area in accordance with the *International Fire Code*; and Are sufficient to pose a threat to the public if released.[b]
IV	Buildings and other structures designated as essential facilities, including but not limited to: • Group I-2, Condition 2 occupancies having emergency surgery or emergency treatment facilities. • Structures that house private emergency power generation, medical gas systems, HVAC systems or related infrastructure systems that support emergency surgery or emergency treatment facilities. ((~~• Ambulatory care facilities having emergency surgery or emergency treatment facilities.~~)) • Fire, rescue, ambulance and police stations and emergency vehicle garages. • Designated earthquake, hurricane or other emergency shelters. • Designated emergency preparedness, communications and operations centers and other facilities required for emergency response. • Power-generating stations and other public utility facilities required as emergency backup facilities for Risk Category IV structures. • Buildings and other structures containing quantities of highly toxic materials that: Exceed maximum allowable quantities per control area as given in Table 307.1(2) or per outdoor control area in accordance with the *International Fire Code*; and Are sufficient to pose a threat to the public if released.[b] • Aviation control towers, air traffic control centers and emergency aircraft hangars. • Buildings and other structures having critical national defense functions. • Water storage facilities and pump structures required to maintain water pressure for fire suppression.

a. For purposes of occupant load calculation, occupancies required by Table 1004.5 to use gross floor area calculations shall be permitted to use net floor areas to determine the total occupant load.

b. Where approved by the building official, the classification of buildings and other structures as Risk Category III or IV based on their quantities of toxic, highly toxic or explosive materials is permitted to be reduced to Risk Category II, provided that it can be demonstrated by a hazard assessment in accordance with Section 1.5.3 of ASCE 7 that a release of the toxic, highly toxic or explosive materials is not sufficient to pose a threat to the public.

1604.5.1 Multiple occupancies. Where a building or structure is occupied by two or more occupancies not included in the same *risk category*, it shall be assigned the classification of the highest *risk category* corresponding to the various occupancies. Where buildings or structures have two or more portions that are structurally separated, each portion shall be separately classified. Where a separated portion of a building or structure provides required access to, required egress from or shares life safety components with another portion having a higher *risk category*, both portions shall be assigned to the higher *risk category*.

Exception: Where a *storm shelter* designed and constructed in accordance with ICC 500 is provided in a building, structure or portion thereof normally occupied for other purposes, the *risk category* for the normal occupancy of the building shall apply unless the *storm shelter* is a designated emergency shelter in accordance with Table 1604.5.

1604.6 In-situ load tests. The *building official* is authorized to require an engineering analysis or a load test, or both, of any construction whenever there is reason to question the safety of the construction for the intended occupancy. Engineering analysis and load tests shall be conducted in accordance with Section 1708.

DRAFT

1605.2 Load combinations using strength design or load and resistance factor design. Where strength design or load and resistance factor design is used, buildings and other structures, and portions thereof, shall be designed to resist the most critical effects resulting from the following combinations of factored loads:

$1.4(D + F)$ **(Equation 16-1)**

$1.2(D + F) + 1.6(L + H) + 0.5(L_r \text{ or } S \text{ or } R)$ **(Equation 16-2)**

$1.2(D + F) + 1.6(L_r \text{ or } S \text{ or } R) + 1.6H + (f_1L \text{ or } 0.5W)$ **(Equation 16-3)**

$1.2(D + F) + 1.0W + f_1L + 1.6H + 0.5(L_r \text{ or } S \text{ or } R)$ **(Equation 16-4)**

$1.2(D + F) + 1.0E + f_1L + 1.6H + f_2S$ **(Equation 16-5)**

$0.9D + 1.0W + 1.6H$ **(Equation 16-6)**

$0.9(D + F) + 1.0E + 1.6H$ **(Equation 16-7)**

where:

f_1 = 1 for places of public assembly live loads in excess of 100 pounds per square foot (4.79 kN/m^2), and parking garages; and 0.5 for other live loads.

f_2 = 0.7 for roof configurations (such as saw tooth) that do not shed snow off the structure, and 0.2 for other roof configurations.

Exceptions:

1. Where other factored load combinations are specifically required by other provisions of this code, such combinations shall take precedence.
2. Where the effect of *H* resists the primary variable load effect, a load factor of 0.9 shall be included with *H* where *H* is permanent and *H* shall be set to zero for all other conditions.

Interpretation I1605: The lateral pressure on basement and retaining walls due to earthquake motions, as required in Section 1803.5.12, is permitted to be considered as an earthquake load *E* for the purposes of use in load combinations.

1605.2.1 Other loads. Where flood loads, F_a, are to be considered in the design, the load combinations of Section 2.3.2 of ASCE 7 shall be used. Where self-straining loads, *T*, are considered in design, their structural effects in combination with other loads shall be determined in accordance with Section 2.3.4 of ASCE 7. Where an ice-sensitive structure is subjected to loads due to atmospheric icing, the load combinations of Section 2.3.3 of ASCE 7 shall be considered.

1605.3 Load combinations using allowable stress design. Load combinations for allowable stress design shall be in accordance with Section 1605.3.1 or 1605.3.2.

1605.3.1 Basic load combinations. Where *allowable stress design* (working stress design), as permitted by this code, is used, structures and portions thereof shall resist the most critical effects resulting from the following combinations of loads:

$D + F$ **(Equation 16-8)**

$D + H + F + L$ **(Equation 16-9)**

$D + H + F + (L_r \text{ or } S \text{ or } R)$ **(Equation 16-10)**

$D + H + F + 0.75(L) + 0.75(L_r \text{ or } S \text{ or } R)$ **(Equation 16-11)**

$D + H + F + (0.6W \text{ or } 0.7E)$ **(Equation 16-12)**

$D + H + F + 0.75(0.6W) + 0.75L + 0.75(L_r \text{ or } S \text{ or } R)$ **(Equation 16-13)**

$D + H + F + 0.75\,(0.7\,E) + 0.75\,L + 0.75\,S$ **(Equation 16-14)**

$0.6D + 0.6W + H$ **(Equation 16-15)**

$0.6(D + F) + 0.7E + H$ **(Equation 16-16)**

Exceptions:

1. Crane hook loads need not be combined with roof live load or with more than three-fourths of the snow load or one-half of the wind load.
2. Flat roof snow loads of 30 psf (1.44 kN/m^2) or less and roof live loads of 30 psf (1.44 kN/m^2) or less need not be combined with seismic loads. Where flat roof snow loads exceed 30 psf (1.44 kN/m^2), 20 percent shall be combined with seismic loads.
3. Where the effect of *H* resists the primary variable load effect, a load factor of 0.6 shall be included with *H* where *H* is permanent and *H* shall be set to zero for all other conditions.

DRAFT

4. In Equation 16-15, the wind load, W, is permitted to be reduced in accordance with Exception 2 of Section 2.4.1 of ASCE 7.
5. In Equation 16-16, 0.6 D is permitted to be increased to 0.9 D for the design of special reinforced masonry shear walls complying with Chapter 21.

1605.3.1.1 Stress increases. Increases in allowable stresses specified in the appropriate material chapter or the referenced standards shall not be used with the load combinations of Section 1605.3.1, except that increases shall be permitted in accordance with Chapter 23.

1605.3.1.2 Other loads. Where flood loads, F_a, are to be considered in design, the load combinations of Section 2.4.2 of ASCE 7 shall be used. Where self-straining loads, T, are considered in design, their structural effects in combination with other loads shall be determined in accordance with Section 2.4.4 of ASCE 7. Where an ice-sensitive structure is subjected to loads due to atmospheric icing, the load combinations of Section 2.4.3 of ASCE 7 shall be considered.

1605.3.2 Alternative basic load combinations. In lieu of the basic load combinations specified in Section 1605.3.1, structures and portions thereof shall be permitted to be designed for the most critical effects resulting from the following combinations. Where using these alternative basic allowable stress load combinations that include wind or seismic loads, allowable stresses are permitted to be increased or load combinations reduced where permitted by the material chapter of this code or the referenced standards. For load combinations that include the counteracting effects of dead and wind loads, only two-thirds of the minimum dead load likely to be in place during a design wind event shall be used. Where using allowable stresses that have been increased or load combinations that have been reduced as permitted by the material chapter of this code or the referenced standards, where wind loads are calculated in accordance with Chapters 26 through 31 of ASCE 7, the coefficient (ω) in the following equations shall be taken as 1.3. For other wind loads, (ω) shall be taken as 1. Where allowable stresses have not been increased or load combinations have not been reduced as permitted by the material chapter of this code or the referenced standards, (ω) shall be taken as 1. Where using these alternative load combinations to evaluate sliding, overturning and soil bearing at the soil-structure interface, the reduction of foundation overturning from Section 12.13.4 in ASCE 7 shall not be used. Where using these alternative basic load combinations for proportioning foundations for loadings, which include seismic loads, the vertical seismic *load effect*, E_v, in Equation 12.4-4 of ASCE 7 is permitted to be taken equal to zero.

$D + L + (L_r \text{ or } S \text{ or } R)$ **(Equation 16-17)**

$D + L + 0.6\,\omega W$ **(Equation 16-18)**

$D + L + 0.6\,\omega W + S/2$ **(Equation 16-19)**

$D + L + S + 0.6\,\omega W/2$ **(Equation 16-20)**

$D + L + S + E/1.4$ **(Equation 16-21)**

$0.9D + E/1.4$ **(Equation 16-22)**

Exceptions:

1. Crane hook loads need not be combined with roof live loads or with more than three-fourths of the snow load or one-half of the wind load.
2. Flat roof snow loads of 30 psf (1.44 kN/m^2) or less and roof live loads of 30 psf (1.44 kN/m^2) or less need not be combined with seismic loads. Where flat roof snow loads exceed 30 psf (1.44 kN/m^2), 20 percent shall be combined with seismic loads.

1605.3.2.1 Other loads. Where F, H or T are to be considered in the design, each applicable load shall be added to the combinations specified in Section 1605.3.2. Where self-straining loads, T, are considered in the design, their structural effects in combination with other loads shall be determined in accordance with Section 2.4.4 of ASCE 7.

SECTION 1606
DEAD LOADS

1606.1 General. Dead loads are those loads defined in Chapter 2 of this code. Dead loads shall be considered to be permanent loads.

1606.2 Design dead load. For purposes of design, the actual weights of materials of construction and fixed service equipment shall be used. In the absence of definite information, values used shall be subject to the approval of the *building official*.

[S] 1606.3 Solar zone for solar-ready roof. Where a *solar zone* is required by the *International Energy Conservation Code*, it shall be designed for an assumed dead load of 5 pounds per square foot in addition to other required live and dead loads. An area of 2 square feet for each 1000 square feet of solar zone area shall be designed for an assumed dead load of 175 pounds per square foot. If the actual weight of the system at the time of installation exceeds the assumed loads in this section, the actual weight shall be used to verify the adequacy of the roof structure. This area shall be located within or adjacent to the solar zone. The as-designed dead load and live load for the *solar zone* shall be clearly marked on the *construction documents.*

DRAFT

Note: The 175 psf represents the weight of the inverters necessary for PV systems. See *International Energy Conservation Code* Section C412.

SECTION 1607
LIVE LOADS

1607.1 General. Live loads are those loads defined in Chapter 2 of this code.

[S] TABLE 1607.1
MINIMUM UNIFORMLY DISTRIBUTED LIVE LOADS, L_o, AND MINIMUM CONCENTRATED LIVE LOADS[g]

OCCUPANCY OR USE	UNIFORM (psf)	CONCENTRATED (pounds)
1. Apartments (see residential)	—	—
2. Access floor systems Office use Computer use	 50 100	 2,000 2,000
3. Armories and drill rooms	150[n]	—
4. Assembly areas Fixed seats (fastened to floor) Follow spot, projections and control rooms Lobbies Movable seats Stage floors Platforms (assembly) Other assembly areas	 60[m] 50 100[m] 100[m] 150[n] 100[m] 100[m]	—
5. Balconies and decks[h, ~~p~~]	1.5 times the live load for the area served, not required to exceed 100	—
6. Catwalks	40	300
7. ((~~Cornices~~)) *Canopies*[g] and cornices	60	—
8. Corridors First floor Other floors	 100 Same as occupancy served except as indicated	—
9. Dining rooms and restaurants	100[m]	—
10. Dwellings (see residential)	—	—
11. Elevator machine room and controlroom grating (on area of 2 inches by 2 inches)	—	300
12. Finish light floor plate construction (on area of 1 inch by 1 inch)	—	200
13. Fire escapes On single-family dwellings only	100 40	—
14. Garages (passenger vehicles only) Trucks and buses	40[o] See Section 1607.7	Note a
15. Handrails, guards and grab bars	See Section 1607.8	
16. Helipads	See Section 1607.6	
17. Hospitals Corridors above first floor Operating rooms, laboratories Patient rooms	 80 60 40	 1,000 1,000 1,000
18. Hotels (see residential)	—	—
19. Libraries Corridors above first floor Reading rooms Stack rooms	 80 60 150[b, n]	 1,000 1,000 1,000
20. Manufacturing Heavy Light	 250[n] 125[n]	 3,000 2,000
21. ((~~Marquees, except one- and two-family dwellings~~)) Reserved.	75	—

DRAFT

of 4-1/2 inches by 4-1/2 inches; (2) for mechanical parking structures without slab or deck that are used for storing passenger vehicles only, 2,250 pounds per wheel.

b. The loading applies to stack room floors that support nonmobile, double-faced library book stacks, subject to the following limitations:
   1. The nominal book stack unit height shall not exceed 90 inches.
   2. The nominal shelf depth shall not exceed 12 inches for each face.
   3. Parallel rows of double-faced book stacks shall be separated by aisles not less than 36 inches wide.

c. Design in accordance with ICC 300.

d. Other uniform loads in accordance with an approved method containing provisions for truck loadings shall be considered where appropriate.

e. The concentrated wheel load shall be applied on an area of 4.5 inches by 4.5 inches.

f. The minimum concentrated load on stair treads shall be applied on an area of 2 inches by 2 inches. This load need not be assumed to act concurrently with the uniform load.

((~~g. Where snow loads occur that are in excess of the design conditions, the structure shall be designed to support the loads due to the increased loads caused by drift buildup or a greater snow design determined by the building official (see Section 1608).~~))

g. This loading condition need only be considered for *canopies* that meet all of the following conditions:
   1. The upper surface is sloped less than 30 degrees (0.5 rad) from horizontal; and
   2. The *canopy* is located adjacent to a right of way or assembly area; and
   3. The *canopy* is located less than 10 feet (3048 mm) above the ground at all points, or less than 10 feet (3048 mm) below an adjacent roof, or less than 10 feet (3048 mm) from operable openings above or adjacent to the level of the *canopy*.

   For other *canopies*, roof loads as specified in this chapter shall be applied.

   Canopy is defined in Section 202.

h. See Section 1604.8.3 for decks attached to exterior walls.

i. Uninhabitable attics without storage are those where the maximum clear height between the joists and rafters is less than 42 inches, or where there are not two or more adjacent trusses with web configurations capable of accommodating an assumed rectangle 42 inches in height by 24 inches in width, or greater, within the plane of the trusses. This live load need not be assumed to act concurrently with any other live load requirements.

j. Uninhabitable attics with storage are those where the maximum clear height between the joists and rafters is 42 inches or greater, or where there are two or more adjacent trusses with web configurations capable of accommodating an assumed rectangle 42 inches in height by 24 inches in width, or greater, within the plane of the trusses.

   The live load need only be applied to those portions of the joists or truss bottom chords where both of the following conditions are met:
   i. The attic area is accessible from an opening not less than 20 inches in width by 30 inches in length that is located where the clear height in the attic is not less than 30 inches.
   ii. The slopes of the joists or truss bottom chords are not greater than two units vertical in 12 units horizontal.

   The remaining portions of the joists or truss bottom chords shall be designed for a uniformly distributed concurrent live load of not less than 10 pounds per square foot.

k. Attic spaces served by stairways other than the pull-down type shall be designed to support the minimum live load specified for habitable attics and sleeping rooms.

l. Areas of occupiable roofs, other than roof gardens and assembly areas, shall be designed for appropriate loads as approved by the building official. Unoccupied landscaped areas of roofs shall be designed in accordance with Section 1607.13.3.

m. Live load reduction is not permitted.

n. Live load reduction is only permitted in accordance with Section 1607.11.1.2 or Item 1 of Section 1607.11.2.

o. Live load reduction is only permitted in accordance with Section 1607.11.1.3 or Item 2 of Section 1607.11.2.

p. Decks and balconies that are accessed only from a dwelling unit or private office shall comply with live load requirements of the occupancy served. Other decks and balconies are considered "other assembly areas."

DRAFT

1607.2 Loads not specified. For occupancies or uses not designated in Table 1607.1, the live load shall be determined in accordance with a method *approved* by the *building official*.

1607.3 Uniform live loads. The live loads used in the design of buildings and other structures shall be the maximum loads expected by the intended use or occupancy but shall not be less than the minimum uniformly distributed live loads given in Table 1607.1.

1607.4 Concentrated live loads. Floors, roofs and other similar surfaces shall be designed to support the uniformly distributed live loads prescribed in Section 1607.3 or the concentrated live loads, given in Table 1607.1, whichever produces the greater *load effects*. Unless otherwise specified, the indicated concentration shall be assumed to be uniformly distributed over an area of 2-1/2 feet by 2-1/2 feet (762 mm by 762 mm) and shall be located so as to produce the maximum *load effects* in the structural members.

1607.5 Partition loads. In office buildings and in other buildings where partition locations are subject to change, provisions for partition weight shall be made, whether or not partitions are shown on the construction documents, unless the specified live load is 80 psf (3.83 kN/m^2) or greater. The partition load shall be not less than a uniformly distributed live load of 15 psf (0.72 kN/m^2).

1607.6 Helipads. Helipads shall be designed for the following live loads:

1. A uniform live load, L, as specified in Items 1.1 and 1.2. This load shall not be reduced.
   1.1. 40 psf (1.92 kN/m^2) where the design basis helicopter has a maximum take-off weight of 3,000 pounds (13.35 kN) or less.

1.2. 60 psf (2.87 kN/m^2) where the design basis helicopter has a maximum take-off weight greater than 3,000 pounds (13.35 kN).

2. A single concentrated live load, *L*, of 3,000 pounds (13.35 kN) applied over an area of 4.5 inches by 4.5 inches (114 mm by 114 mm) and located so as to produce the maximum load effects on the structural elements under consideration. The concentrated load is not required to act concurrently with other uniform or concentrated live loads.

3. Two single concentrated live loads, *L*, 8 feet (2438 mm) apart applied on the landing pad (representing the helicopter's two main landing gear, whether skid type or wheeled type), each having a magnitude of 0.75 times the maximum take-off weight of the helicopter, and located so as to produce the maximum load effects on the structural elements under consideration. The concentrated loads shall be applied over an area of 8 inches by 8 inches (203 mm by 203 mm) and are not required to act concurrently with other uniform or concentrated live loads.

Landing areas designed for a design basis helicopter with maximum take-off weight of 3,000-pounds (13.35 kN) shall be identified with a 3,000 pound (13.34 kN) weight limitation. The landing area weight limitation shall be indicated by the numeral "3" (kips) located in the bottom right corner of the landing area as viewed from the primary approach path. The indication for the landing area weight limitation shall be a minimum 5 feet (1524 mm) in height.

1607.7 Heavy vehicle loads. Floors and other surfaces that are intended to support vehicle loads greater than a 10,000-pound (4536 kg) gross vehicle weight rating shall comply with Sections 1607.7.1 through 1607.7.5.

1607.7.1 Loads. Where any structure does not restrict access for vehicles that exceed a 10,000-pound (4536 kg) gross vehicle weight rating, those portions of the structure subject to such loads shall be designed using the vehicular live loads, including consideration of impact and fatigue, in accordance with the codes and specifications required by the jurisdiction having authority for the design and construction of the roadways and bridges in the same location of the structure.

1607.7.2 Fire truck and emergency vehicles. Where a structure or portions of a structure are accessed and loaded by fire department access vehicles and other similar emergency vehicles, the structure shall be designed for the greater of the following loads:

1. The actual operational loads, including outrigger reactions and contact areas of the vehicles as stipulated and approved by the building official.

2. The live loading specified in Section 1607.7.1.

1607.7.3 Heavy vehicle garages. Garages designed to accommodate vehicles that exceed a 10,000-pound (4536 kg) gross vehicle weight rating, shall be designed using the live loading specified by Section 1607.7.1. For garages the design for impact and fatigue is not required.

Exception: The vehicular live loads and load placement are allowed to be determined using the actual vehicle weights for the vehicles allowed onto the garage floors, provided that such loads and placement are based on rational engineering principles and are approved by the building official, but shall be not less than 50 psf (2.9 kN/m^2). This live load shall not be reduced.

1607.7.4 Forklifts and movable equipment. Where a structure is intended to have forklifts or other movable equipment present, the structure shall be designed for the total vehicle or equipment load and the individual wheel loads for the anticipated vehicles as specified by the owner of the facility. These loads shall be posted in accordance with Section 1607.7.5.

1607.7.4.1 Impact and fatigue. Impact loads and fatigue loading shall be considered in the design of the supporting structure. For the purposes of design, the vehicle and wheel loads shall be increased by 30 percent to account for impact.

[S] 1607.7.5 Posting. The maximum weight of vehicles allowed into or on a garage or other structure shall be posted by the owner or the owner's authorized agent in accordance with Section ((~~106.1~~)) 107.

1607.8 Loads on handrails, guards, grab bars and seats. Handrails and *guards* shall be designed and constructed for the structural loading conditions set forth in Section 1607.8.1. Grab bars, shower seats and accessible benches shall be designed and constructed for the structural loading conditions set forth in Section 1607.8.2.

1607.8.1 Handrails and guards. Handrails and *guards* shall be designed to resist a linear load of 50 pounds per linear foot (plf) (0.73 kN/m) in accordance with Section 4.5.1.1 of ASCE 7. Glass handrail assemblies and *guards* shall comply with Section 2407.

Exceptions:

1. For one- and two-family dwellings, only the single concentrated load required by Section 1607.8.1.1 shall be applied.

2. In Group I-3, F, H and S occupancies, for areas that are not accessible to the general public and that have an *occupant load* less than 50, the minimum load shall be 20 pounds per foot (0.29 kN/m).

1607.8.1.1 Concentrated load. Handrails and guards shall be designed to resist a concentrated load of 200 pounds (0.89 kN) in accordance with Section 4.5.1.1 of ASCE 7.

DRAFT

3. For live loads not exceeding 100 psf (4.79 kN/m^2), the design live load for any structural member supporting 150 square feet (13.94 m^2) or more is permitted to be reduced in accordance with Equation 16-24.
4. For one-way slabs, the area, A, for use in Equation 16-24 shall not exceed the product of the slab span and a width normal to the span of 0.5 times the slab span.

$R = 0.08(A - 150)$ **(Equation 16-24)**

For SI: $R = 0.861(A - 13.94)$

Such reduction shall not exceed the smallest of:

1. 40 percent for members supporting one floor.
2. 60 percent for members supporting two or more floors.
3. R as determined by the following equation:

$R = 23.1(1 + D/L_o)$ **(Equation 16-25)**

where:

A = Area of floor supported by the member, square feet (m^2).

D = Dead load per square foot (m^2) of area supported.

L_o = Unreduced live load per square foot (m^2) of area supported.

R = Reduction in percent.

1607.12 Distribution of floor loads. Where uniform floor live loads are involved in the design of structural members arranged so as to create continuity, the minimum applied loads shall be the full dead loads on all spans in combination with the floor live loads on spans selected to produce the greatest *load effect* at each location under consideration. Floor live loads are permitted to be reduced in accordance with Section 1607.11.

[S] 1607.13 Roof loads. The structural supports of roofs and ((~~marquees~~)) *canopies* shall be designed to resist wind and, where applicable, snow and earthquake loads, in addition to the dead load of construction and the appropriate live loads as prescribed in this section. ((~~, or as set forth in Table 1607.1.~~)) The live loads acting on a sloping surface shall be assumed to act vertically on the horizontal projection of that surface.

[S] 1607.13.1 Distribution of roof loads. Where uniform roof live loads are reduced to less than 20 psf (0.96 kN/m^2) in accordance with Section 1607.13.2.1 and are applied to the design of structural members arranged so as to create continuity, the reduced roof live load shall be applied to adjacent spans or to alternate spans, whichever produces the most unfavorable *load effect*. See Section 1607.13.2 for reductions in minimum roof live loads and Section 7.5 of ASCE 7 for ((~~partial~~)) snow loading.

[S] 1607.13.2 General. The minimum uniformly distributed live loads of roofs and ((~~marquees~~)) *canopies*, L_o, in Table 1607.1 are permitted to be reduced in accordance with Section 1607.13.2.1.

1607.13.2.1 Ordinary roofs, awnings and canopies. Ordinary flat, pitched and curved roofs, and awnings and canopies other than of fabric construction supported by a skeleton structure, are permitted to be designed for a reduced uniformly distributed roof live load, L_r, as specified in the following equations or other controlling combinations of loads as specified in Section 1605, whichever produces the greater *load effect*.

In structures such as greenhouses, where special scaffolding is used as a work surface for workers and materials during maintenance and repair operations, a lower roof load than specified in the following equations shall not be used unless *approved* by the *building official*. Such structures shall be designed for a minimum roof live load of 12 psf (0.58 kN/m^2).

$L_r = L_o R_1 R_2$ **(Equation 16-26)**

where: $12 \le L_r \le 20$

For SI: $L_r = L_o R_1 R_2$

where: $0.58 \le L_r \le 0.96$

L_o = Unreduced roof live load per square foot (m^2) of horizontal projection supported by the member (see Table 1607.1).

L_r = Reduced roof live load per square foot (m^2) of horizontal projection supported by the member.

The reduction factors R_1 and R_2 shall be determined as follows:

$R_1 = 1$ for $A_t \le 200$ square feet (18.58 m^2)

(Equation 16-27)

$R_1 = 1.2 - 0.001A_t$ for 200 square feet $< A_t <$ 600 square feet **(Equation 16-28)**

For SI: $1.2 - 0.011A_t$ for 18.58 square meters $< A_t <$ 55.74 square meters

DRAFT

$R_1 = 0.6$ for $A_t \geq 600$ square feet (55.74 m^2)

(Equation 16-29)

where:

A_t = Tributary area (span length multiplied by effective width) in square feet (m^2) supported by the member, and

$R_2 = 1$ for $F \leq 4$ **(Equation 16-30)**

$R_2 = 1.2 - 0.05\,F$ for $4 < F < 12$ **(Equation 16-31)**

$R_2 = 0.6$ for $F \geq 12$ **(Equation 16-32)**

where:

F = For a sloped roof, the number of inches of rise per foot (for SI: $F = 0.12 \times$ slope, with slope expressed as a percentage), or for an arch or dome, the rise-to-span ratio multiplied by 32.

1607.13.3 Occupiable roofs. Areas of roofs that are occupiable, such as *vegetative roofs*, roof gardens or for assembly or other similar purposes, and ((~~marquees~~)) *canopies* are permitted to have their uniformly distributed live loads reduced in accordance with Section 1607.11.

1607.13.3.1 Vegetative and landscaped roofs. The weight of all landscaping materials shall be considered as dead load and shall be computed on the basis of saturation of the soil as determined in accordance with Section 3.1.4 of ASCE 7. The uniform design live load in unoccupied landscaped areas on roofs shall be 20 psf (0.958 kN/m^2). The uniform design live load for occupied landscaped areas on roofs shall be determined in accordance with Table 1607.1.

1607.13.4 Awnings and canopies. Awnings and canopies shall be designed for uniform live loads as required in Table 1607.1 as well as for snow loads and wind loads as specified in Sections 1608 and 1609.

1607.13.5 Photovoltaic panel systems. Roof structures that provide support for *photovoltaic panel systems* shall be designed in accordance with Sections 1607.13.5.1 through 1607.13.5.4, as applicable.

1607.13.5.1 Roof live load. Roof structures that support photovoltaic panel systems shall be designed to resist each of the following conditions:

1. Applicable uniform and concentrated roof loads with the photovoltaic panel system dead loads.

   Exception: Roof live loads need not be applied to the area covered by photovoltaic panels where the clear space between the panels and the roof surface is 24 inches (610 mm) or less.

2. Applicable uniform and concentrated roof loads without the photovoltaic panel system present.

1607.13.5.2 Photovoltaic panels or modules. The structure of a roof that supports solar photovoltaic panels or modules shall be designed to accommodate the full solar photovoltaic panels or modules and ballast dead load, including concentrated loads from support frames in combination with the loads from Section 1607.13.5.1 and other applicable loads. Where applicable, snow drift loads created by the photovoltaic panels or modules shall be included.

1607.13.5.2.1 Photovoltaic panels installed on open grid roof structures. Structures with open grid framing and without a roof deck or sheathing supporting photovoltaic panel systems shall be designed to support the uniform and concentrated roof live loads specified in Section 1607.13.5.1, except that the uniform roof live load shall be permitted to be reduced to 12 psf (0.57 kN/m^2).

1607.13.5.3 Photovoltaic panels or modules installed as an independent structure. Solar photovoltaic panels or modules that are independent structures and do not have accessible/occupied space underneath are not required to accommodate a roof photovoltaic live load, provided that the area under the structure is restricted to keep the public away. Other loads and combinations in accordance with Section 1605 shall be accommodated.

Solar photovoltaic panels or modules that are designed to be the roof, span to structural supports and have accessible/occupied space underneath shall have the panels or modules and all supporting structures designed to support a roof photovoltaic live load, as defined in Section 1607.13.5.1 in combination with other applicable loads. Solar photovoltaic panels or modules in this application are not permitted to be classified as "not accessible" in accordance with Section 1607.13.5.1.

1607.13.5.4 Ballasted photovoltaic panel systems. Roof structures that provide support for ballasted *photovoltaic panel systems* shall be designed, or analyzed, in accordance with Section 1604.4; checked in accordance with Section 1604.3.6 for deflections; and checked in accordance with Section 1611 for ponding.

1607.14 Crane loads. The crane live load shall be the rated capacity of the crane. Design loads for the runway beams, including connections and support brackets, of moving bridge cranes and monorail cranes shall include the maximum wheel loads of the crane and the vertical impact, lateral and longitudinal forces induced by the moving crane.

1607.14.1 Maximum wheel load. The maximum wheel loads shall be the wheel loads produced by the weight of the bridge, as applicable, plus the sum of the rated capacity and the weight of the trolley with the trolley positioned on its runway at the location where the resulting load effect is maximum.

DRAFT

1607.14.2 Vertical impact force. The maximum wheel loads of the crane shall be increased by the following percentages to determine the induced vertical impact or vibration force:

Monorail cranes (powered) . . . . . 25 percent
Cab-operated or remotely operated bridge cranes (powered) . . . . . 25 percent
Pendant-operated bridge cranes (powered) . . . . . 10 percent
Bridge cranes or monorail cranes with hand-geared bridge, trolley and hoist . . . . . 0 percent

1607.14.3 Lateral force. The lateral force on crane runway beams with electrically powered trolleys shall be calculated as 20 percent of the sum of the rated capacity of the crane and the weight of the hoist and trolley. The lateral force shall be assumed to act horizontally at the traction surface of a runway beam, in either direction perpendicular to the beam, and shall be distributed with due regard to the lateral stiffness of the runway beam and supporting structure.

1607.14.4 Longitudinal force. The longitudinal force on crane runway beams, except for bridge cranes with hand-geared bridges, shall be calculated as 10 percent of the maximum wheel loads of the crane. The longitudinal force shall be assumed to act horizontally at the traction surface of a runway beam, in either direction parallel to the beam.

1607.15 Interior walls and partitions. Interior walls and partitions that exceed 6 feet (1829 mm) in height, including their finish materials, shall have adequate strength and stiffness to resist the loads to which they are subjected but not less than a horizontal load of 5 psf (0.240 kN/m^2).

1607.15.1 Fabric partitions. Fabric partitions that exceed 6 feet (1829 mm) in height, including their finish materials, shall have adequate strength and stiffness to resist the following load conditions:

1. The horizontal distributed load need only be applied to the partition framing. The total area used to determine the distributed load shall be the area of the fabric face between the framing members to which the fabric is attached. The total distributed load shall be uniformly applied to such framing members in proportion to the length of each member.
2. A concentrated load of 40 pounds (0.176 kN) applied to an 8-inch-diameter (203 mm) area [50.3 square inches (32 452 mm^2)] of the fabric face at a height of 54 inches (1372 mm) above the floor.

1607.15.2 Fire walls. In order to meet the structural stability requirements of Section 706.2 where the structure on either side of the wall has collapsed, fire walls and their supports shall be designed to withstand a minimum horizontal allowable stress load of 5 psf (0.240 kN/m^2).

DRAFT

SECTION 1608
SNOW LOADS

[S] 1608.1 General. Roofs shall be designed for a uniform snow load of at least 25 psf (1200 Pa). Design snow loads shall be determined in accordance with Chapter 7 of ASCE 7, but the design roof load shall be not less than that determined by Section 1607.

1608.2 Ground snow loads. The ground snow loads to be used in determining the design snow loads for roofs shall be determined in accordance with ASCE 7 or Figure 1608.2 for the contiguous United States and Table 1608.2 for Alaska. Site-specific case studies shall be made in areas designated "CS" in Figure 1608.2. Ground snow loads for sites at elevations above the limits indicated in Figure 1608.2 and for all sites within the CS areas shall be *approved*. Ground snow load determination for such sites shall be based on an extreme value statistical analysis of data available in the vicinity of the site using a value with a 2-percent annual probability of being exceeded (50-year mean recurrence interval). Snow loads are zero for Hawaii, except in mountainous regions as *approved* by the *building official*.

1611.2 Ponding instability. Susceptible bays of roofs shall be evaluated for ponding instability in accordance with Section 8.4 of ASCE 7.

1611.3 Controlled drainage. Roofs equipped with hardware to control the rate of drainage shall be equipped with a secondary drainage system at a higher elevation that limits accumulation of water on the roof above that elevation. Such roofs shall be designed to sustain the load of rainwater that will accumulate on them to the elevation of the secondary drainage system plus the uniform load caused by water that rises above the inlet of the secondary drainage system at its design flow determined from Section 1611.1. Such roofs shall be checked for ponding instability in accordance with Section 1611.2.

SECTION 1612
FLOOD LOADS

1612.1 General. Within *flood hazard areas* as established in Section 1612.3, all new construction of buildings, structures and portions of buildings and structures, including substantial improvement and restoration of substantial damage to buildings and structures, shall be designed and constructed to resist the effects of flood hazards and flood loads. For buildings that are located in more than one *flood hazard area*, the provisions associated with the most restrictive *flood hazard area* shall apply.

1612.2 Design and construction. The design and construction of buildings and structures located in *flood hazard areas*, including *coastal high hazard areas* and *coastal A zones*, shall be in accordance with Chapter 5 of ASCE 7 and ASCE 24.

[S] 1612.3 Establishment of flood hazard areas. ((~~To establish *flood hazard areas*, the applicable governing authority shall adopt a flood hazard map and supporting data. The flood hazard map shall include, at a minimum, areas of special flood hazard as identified by the Federal Emergency Management Agency in an engineering report entitled "The Flood Insurance Study for **[INSERT NAME OF JURISDICTION]**," dated **[INSERT DATE OF ISSUANCE]**, as amended or revised with the accompanying Flood Insurance Rate Map (FIRM) and Flood Boundary and Floodway Map (FBFM) and related supporting data along with any revisions thereto.~~)) The ((~~adopted~~)) flood hazard map and supporting data adopted in Seattle Municipal Code Section 25.06.050 and areas mapped by Seattle Public Utilities are hereby adopted by reference and declared to be part of this section.

1612.3.1 Design flood elevations. Where design flood elevations are not included in the *flood hazard areas* established in Section 1612.3, or where floodways are not designated, the *building official* is authorized to require the applicant to do one of the following:

1. Obtain and reasonably utilize any design flood elevation and floodway data available from a federal, state or other source.
2. Determine the design flood elevation or floodway in accordance with accepted hydrologic and hydraulic engineering practices used to define special flood hazard areas. Determinations shall be undertaken by a *registered design professional* who shall document that the technical methods used reflect currently accepted engineering practice.

1612.3.2 Determination of impacts. In riverine *flood hazard areas* where design flood elevations are specified but floodways have not been designated, the applicant shall provide a floodway analysis that demonstrates that the proposed work will not increase the design flood elevation more than 1 foot (305 mm) at any point within the jurisdiction of the applicable governing authority.

[S] 1612.4 Flood hazard documentation. The following documentation shall be prepared and sealed by a *registered design professional* and submitted to the *building official*:

1. For construction in *flood hazard areas* other than *coastal high hazard areas* or *coastal A zones*:
   - 1.1. The elevation of the lowest floor, including the basement, as required by the lowest floor elevation inspection in Section ((~~110.3.3~~)) 108.9.4 and for the final inspection in Section ((~~110.3.11.1~~)) 108.9.9.1.
   - 1.2. For fully enclosed areas below the design flood elevation where provisions to allow for the automatic entry and exit of floodwaters do not meet the minimum requirements in Section 2.7.2.1 of ASCE 24, *construction documents* shall include a statement that the design will provide for equalization of hydrostatic flood forces in accordance with Section 2.7.2.2 of ASCE 24.
   - 1.3. For dry floodproofed nonresidential buildings, *construction documents* shall include a statement that the dry floodproofing is designed in accordance with ASCE 24.
2. For construction in *coastal high hazard areas* and *coastal A zones*:
   - 2.1. The elevation of the bottom of the lowest horizontal structural member as required by the lowest floor elevation inspection in Section ((~~110.3.3~~)) 108.9.4 and for the final inspection in Section ((~~110.3.11.1~~)) 108.9.9.1.
   - 2.2. *Construction documents* shall include a statement that the building is designed in accordance with ASCE 24, including that the pile or column foundation and building or structure to be attached thereto is designed to be anchored to resist flotation, collapse and lateral movement due to the effects of wind and flood loads acting simultaneously on all building components, and other load requirements of Chapter 16.

DRAFT

2.3. For breakaway walls designed to have a resistance of more than 20 psf (0.96 kN/m^2) determined using allowable stress design, *construction documents* shall include a statement that the breakaway wall is designed in accordance with ASCE 24.

SECTION 1613
EARTHQUAKE LOADS

[S] 1613.1 Scope. Every structure, and portion thereof, including nonstructural components that are permanently attached to structures and their supports and attachments, shall be designed and constructed to resist the effects of earthquake motions in accordance with Chapters 11, 12, 13, 15, 17 and 18 of ASCE 7 as amended by Section 1613.4, as applicable. The *seismic design category* for a structure is permitted to be determined in accordance with Section 1613 or ASCE 7.

Exceptions:

1. Detached one- and two-family dwellings, assigned to *Seismic Design Category* A, B or C, or located where the mapped short-period spectral response acceleration, S_S, is less than 0.4 g.
2. The seismic force-resisting system of wood-frame buildings that conform to the provisions of Section 2308 are not required to be analyzed as specified in this section.
3. Agricultural storage structures intended only for incidental human occupancy.
4. Structures that require special consideration of their response characteristics and environment that are not addressed by this code or ASCE 7 and for which other regulations provide seismic criteria, such as vehicular bridges, electrical transmission towers, hydraulic structures, buried utility lines and their appurtenances and nuclear reactors.
5. References within ASCE 7 to Chapter 14 shall not apply, except as specifically required herein.

[S] 1613.1.1 Presubmittal conference. At least 60 days prior to application, the applicant shall arrange a presubmittal conference with the structural engineer of record and the *building official* to review the proposed building structural system when it is not defined in Table 12.2-1 in ASCE 7 or when an alternate procedure is used under the provisions in Section 104.4 or 104.5. The purpose of the meeting is to obtain conceptual approval from the *building official* of the proposed structural system.

1613.2 Seismic ground motion values. Seismic ground motion values shall be determined in accordance with this section.

1613.2.1 Mapped acceleration parameters. The parameters S_S and S_1 shall be determined from the 0.2 and 1-second spectral response accelerations shown on Figures 1613.2.1(1) through 1613.2.1(8). Where S_1 is less than or equal to 0.04 and S_S is less than or equal to 0.15, the structure is permitted to be assigned *Seismic Design Category* A.

DRAFT

not more than one unit vertical in 12 units horizontal. Ballasted nonpenetrating systems shall be designed to resist sliding and uplift resulting from lateral and vertical forces as required by Section 1605, using a coefficient of friction determined by acceptable engineering principles. In structures assigned to *Seismic Design Category* C, D, E or F, ballasted nonpenetrating systems shall be designed to accommodate seismic displacement determined by nonlinear response-history or other approved analysis or shake-table testing, using input motions consistent with ASCE 7 lateral and vertical seismic forces for nonstructural components on roofs.

[W] 1613.4 Amendments to ASCE 7. The provisions of Section 1613.4 shall be permitted as an amendment to the relevant provisions of ASCE 7. The text of ASCE 7 shall be amended as indicated in Sections 1613.4.1 through 1613.4.2.

[W] 1613.4.1. Modify ASCE 7 Section 12.2.5.4 to read as follows:

12.2.5.4 Increased Structural Height Limit for Steel Eccentrically Braced Frames, Steel Special Concentrically Braced Frames, Steel Buckling-Restrained Braced Frames, Steel Special Plate Shear Walls, and Special Reinforced Concrete Shear Walls. The limits on height, h_n, in Table 12.2-1 are permitted to be increased from 160 ft (50 m) to 240 ft (75 m) for structures assigned to Seismic Design Categories D or E and from 100 ft (30 m) to 160 ft (50 m) for structures assigned to Seismic Design Category F, if all of the following are satisfied:

1. The structure shall not have an extreme torsional irregularity as defined in Table 12.3-1 (horizontal structural irregularity Type 1b).
2. The steel eccentrically braced frames, steel special concentrically braced frames, steel buckling-restrained braced frames, steel special plate shear walls or special reinforced concrete shear walls in any one plane shall resist no more than 60 percent of the total seismic forces in each direction, neglecting accidental torsional effects.
3. Where floor and roof diaphragms transfer forces from the vertical seismic force-resisting elements above the diaphragm to other vertical force-resisting elements below the diaphragm, these in plane transfer forces shall be amplified by the overstrength factor, Ω_o, for the design of the diaphragm flexure, shear, and collectors.
4. The earthquake force demands in foundation mat slabs, grade beams, and pile caps supporting braced frames and/or walls arranged to form a shear-resisting core shall be amplified by 2 for shear and 1.5 for flexure. The redundancy factor, ρ, applies and shall be the same as that used for the structure in accordance with Section 12.3.4.
5. The earthquake shear force demands in special reinforced concrete shear walls shall be amplified by the overstrength factor, Ω_o.

[W] 1613.4.2 ASCE 7 Section 12.6. Amend ASCE 7 Section 12.6 and Table 12.6-1 to read as follows:

12.6 ANALYSIS PROCEDURE SELECTION

12.6.1 Analysis procedure. The structural analysis required by Chapter 12 shall consist of one of the types permitted in Table 12.6-1, based on the structure's seismic design category, structural system, dynamic properties, and regularity, or with the approval of the authority having jurisdiction, an alternative generally accepted procedure is permitted to be used. The analysis procedure selected shall be completed in accordance with the requirements of the corresponding section referenced in Table 12.6-1.

DRAFT

Table 12.6-1 Permitted Analytical Procedures

Seismic Design Category	Structural Characteristics	Equivalent Lateral Force Procedure, Section 12.8[a]	Modal Response Spectrum Analysis, Section 12.9, or Linear Response History Analysis, Section 12.9.2[a]	Nonlinear Response History Procedures, Chapter 16[a]
B, C	All structures	P	P	P
D, E, F	Risk Category I or II buildings not exceeding two *stories* above the base	P	P	P
	Structures of light frame construction	P	P	P
	Structures with no structural irregularities and not exceeding 160 ft in structural height	P	P	P
	Structures exceeding 160 ft in structural height with no structural irregularities and with $T < 3.5T_s$	P	P	P
	Structures not exceeding 160 ft in structural height and having only horizontal irregularities of Type 2, 3, 4, or 5 in Table 12.3-1 or vertical irregularities of Type 4, 5a, or 5b in Table 12.3-2	P	P	P
	All other structures ≤ 240 ft in height	NP	P	P
	All structures > 240 ft in height	NP	NP	P[a]

[a] P: Permitted; NP: Not Permitted; $T_s = S_{D1}/S_{DS}$.

DRAFT

SECTION 1614
ATMOSPHERIC ICE LOADS

1614.1 General. Ice-sensitive structures shall be designed for atmospheric ice loads in accordance with Chapter 10 of ASCE 7.

SECTION 1615
TSUNAMI LOADS

1615.1 General. The design and construction of Risk Category III and IV buildings and structures located in the Tsunami Design Zones defined in the Tsunami Design Geodatabase shall be in accordance with Chapter 6 of ASCE 7, except as modified by this code.

SECTION 1616
STRUCTURAL INTEGRITY

1616.1 General. *High-rise buildings* that are assigned to *Risk Category* III or IV shall comply with the requirements of Section 1616.2 if they are frame structures, or Section 1616.3 if they are bearing wall structures.

1616.2 Frame structures. Frame structures shall comply with the requirements of this section.

1616.2.1 Concrete frame structures. Frame structures constructed primarily of reinforced or prestressed concrete, either cast-in-place or precast, or a combination of these, shall conform to the requirements of Section 4.10 of ACI 318. Where ACI 318 requires that nonprestressed reinforcing or prestressing steel pass through the region bounded by the longitudinal column reinforcement, that reinforcing or prestressing steel shall have a minimum nominal tensile strength equal to two-thirds of the required one-way vertical strength of the connection of the floor or roof system to the column in each direction of beam or slab reinforcement passing through the column.

Exception: Where concrete slabs with continuous reinforcement having an area not less than 0.0015 times the concrete area in each of two orthogonal directions are present and are either monolithic with or equivalently bonded to beams, girders or columns, the longitudinal reinforcing or prestressing steel passing through the column reinforcement shall have a nominal tensile strength of one-third of the required one-way vertical strength of the connection of the floor or roof system to the column in each direction of beam or slab reinforcement passing through the column.

1616.2.2 Structural steel, open web steel joist or joist girder, or composite steel and concrete frame structures. Frame structures constructed with a structural steel frame or a frame composed of open web steel joists, joist girders with or without other structural steel elements or a frame composed of composite steel or composite steel joists and reinforced concrete elements shall conform to the requirements of this section.

CHAPTER 17

SPECIAL INSPECTIONS AND TESTS

User notes:

About this chapter: *Chapter 17 provides a variety of procedures and criteria for testing materials and assemblies, and labeling materials and assemblies. Its key purposes are to establish where additional inspections/observations and testing must be provided, and the submittals and verifications that must be provided to the building official. This chapter expands on the inspections of Chapter 1 by requiring special inspection by a qualified individual where indicated and, in some cases, structural observation by a registered design professional. Quality assurance measures that verify proper assembly of structural components and the suitability of the installed materials are intended to provide a building that, once constructed, complies with the minimum structural and fire-resistance code requirements as well as the approved design. To determine this compliance often requires frequent inspections and testing at specific stages of construction.*

Code development reminder: *Code change proposals to sections preceded by the designation [BF] will be considered by the IBC—Fire Safety Code Development Committee during the 2018 (Group A) Code Development Cycle. Sections preceded by the designation [F] will be considered by the International Fire Code Development Committee during the 2018 (Group A) Code Development Cycle. All other code change proposals will be considered by the IBC—Structural Code Development Committee during the Group B cycle. See explanation on page iv.*

DRAFT

SECTION 1701
GENERAL

1701.1 Scope. The provisions of this chapter shall govern the quality, workmanship and requirements for materials covered. Materials of construction and tests shall conform to the applicable standards listed in this code.

SECTION 1702
NEW MATERIALS

1702.1 General. New building materials, equipment, appliances, systems or methods of construction not provided for in this code, and any material of questioned suitability proposed for use in the construction of a building or structure, shall be subjected to the tests prescribed in this chapter and in the approved rules to determine character, quality and limitations of use.

SECTION 1703
APPROVALS

[S] 1703.1 Approved agency. Whenever tests or certification of any material or fabricated assembly are required by this code, the tests or certification shall be made by an agency approved by the *building official* to conduct the tests or provide the certification. The *building official* is authorized to establish rules and regulations setting forth conditions and provisions for approval of agencies and for the conduct of any agency so approved. An approved agency shall provide all information as necessary for the *building official* to determine that the agency meets the applicable requirements specified in Sections 1703.1.1 through 1703.1.3. The *building official* is authorized to suspend or revoke approval of an agency upon evidence of failure of the agency to properly conduct any test, certify any material, or to perform any inspection in a manner required by this code.

1703.1.1 Independence. An *approved agency* shall be objective, competent and independent from the contractor responsible for the work being inspected. The agency shall disclose to the *building official* and the *registered design professional in responsible charge* possible conflicts of interest so that objectivity can be confirmed.

1703.1.2 Equipment. An *approved agency* shall have adequate equipment to perform required tests. The equipment shall be periodically calibrated.

[S] 1703.1.3 Personnel. An *approved agency* shall employ experienced personnel educated in conducting, supervising and evaluating tests and *special inspections*. Unless otherwise *approved* by the *building official*, all *special inspectors* shall be registered with the Washington Association of Building Officials. A registered civil or structural engineer or registered architect is permitted to serve as a *special inspector* when approved by the *building official.*

[S] 1703.1.4 Approval of tests and inspections. *Special inspectors* and inspection and testing agencies shall not conduct any inspections or tests until the *building official* has authorized the inspection or test in writing. The *special inspectors* or inspection/testing agency approved by the *building official* shall not be changed without obtaining prior approval of the *registered design professional in responsible charge* or the owner, and the *building official.*

((~~**1703.2 Written approval.** Any material, appliance, equipment, system or method of construction meeting the requirements of this code shall be *approved* in writing after satisfactory completion of the required tests and submission of required test reports.~~

~~**1703.3 Record of approval.** For any material, appliance, equipment, system or method of construction that has been *approved*, a record of such approval, including the conditions and limitations of the approval, shall be kept on file in the *building official's* office and shall be available for public review at appropriate times.~~))

1703.4 Performance. Specific information consisting of test reports conducted by an *approved* agency in accordance with the appropriate referenced standards, or other such information as necessary, shall be provided for the *building official* to determine that the product, material or assembly meets the applicable code requirements.

[S] 1703.4.1 Research and investigation. ((~~Sufficient~~)) If *approved* by the *building official*, technical data shall be submitted to the *building official* to substantiate the proposed use of any product, material or assembly. If it is determined that the evidence submitted is satisfactory proof of performance for the use intended, the *building official* shall approve the use of the product, material or assembly subject to the requirements of this code. The costs, reports and investigations required under these provisions shall be paid by the owner or the owner's authorized agent.

1703.4.2 Research reports. Supporting data, where necessary to assist in the approval of products, materials or assemblies not specifically provided for in this code, shall consist of valid research reports from *approved* sources.

1703.5 Labeling. Products, materials or assemblies required to be *labeled* shall be *labeled* in accordance with the procedures set forth in Sections 1703.5.1 through 1703.5.4.

1703.5.1 Testing. An *approved agency* shall test a representative sample of the product, material or assembly being *labeled* to the relevant standard or standards. The *approved agency* shall maintain a record of the tests performed. The record shall provide sufficient detail to verify compliance with the test standard.

1703.5.2 Inspection and identification. The *approved agency* shall periodically perform an inspection, which shall be in-plant if necessary, of the product or material that is to be *labeled*. The inspection shall verify that the labeled product, material or assembly is representative of the product, material or assembly tested.

1703.5.3 Label information. The *label* shall contain the manufacturer's identification, model number, serial number or definitive information describing the performance characteristics of the product, material or assembly and the *approved agency's* identification.

1703.5.4 Method of labeling. Information required to be permanently identified on the product, material or assembly shall be acid etched, sand blasted, ceramic fired, laser etched, embossed or of a type that, once applied, cannot be removed without being destroyed.

1703.6 Evaluation and follow-up inspection services. Where structural components or other items regulated by this code are not visible for inspection after completion of a prefabricated assembly, the owner or the owner's authorized agent shall submit a report of each prefabricated assembly. The report shall indicate the complete details of the assembly, including a description of the assembly and its components, the basis upon which the assembly is being evaluated, test results and similar information and other data as necessary for the *building official* to determine conformance to this code. Such a report shall be *approved* by the *building official*.

1703.6.1 Follow-up inspection. The owner or the owner's authorized agent shall provide for *special inspections* of fabricated items in accordance with Section 1704.2.5.

1703.6.2 Test and inspection records. Copies of necessary test and *special inspection* records shall be filed with the building official.

[S] 1703.7 Preconstruction conference. For projects requiring *special inspection*, the owner or the owner's agent shall arrange a conference with the project contractor, the design team, the *special inspection* agency and the *building official* prior to commencing work on any portion of construction requiring *special inspection*. The purpose of the conference is to identify and clarify the *special inspection* requirements of the project.

[S] 1703.8 Revocation of registration or approval to inspect. The *building official* is authorized to revoke, suspend or refuse to renew registration or approval of inspection agencies, *special inspectors* and nonregistered *special inspectors*, including inspectors registered by the Washington Association of Building Officials. This may be done upon evidence submitted to the *building official* of incompetence, of willful or negligent failure to observe or report violations of the *Seattle Building Code* or of any other failure to perform properly and effectively the duties required by this code or other duties assumed by an inspection agency or nonregistered *special inspector*. The inspection agency or *special inspector* shall be notified in writing of the *building official*'s decision to revoke, suspend or refuse to renew registration or approval. The notice shall be served in the manner set forth in RCW 4.28.080 for service of a summons or sent by first class mail. For purposes of this section, service is complete at the time of personal service, or if mailed, three days after the date of mailing. When the last day of the period so computed is a Saturday, Sunday or City holiday, the period runs until 5 p.m. on the next business day.

DRAFT

[S] 1703.8.1 Review by the building official for revocation of registration. Any *person* aggrieved by a notice of revocation issued pursuant to Section 1703.8 may obtain a review of the notice by making a request in writing to the *building official* within three business days of the date of service of the notice of revocation.

[S] 1703.8.1.1 Review procedure. The review shall occur within five business days after receipt by the *building official* of the request for review unless otherwise agreed by the *person* requesting the review. Any *person* aggrieved by or interested in the notice of revocation may submit additional information to the *building official* for consideration as part of the review at any time prior to the review. The review will be made by a representative of the *building official* who will review all additional information received and may also request a site visit.

[S] 1703.8.1.2 Decision. After the review, the *building official* shall:

1. Sustain the notice of revocation and set or modify the date the revocation will take effect;
2. Withdraw the notice of revocation;
3. Continue the review to a date certain; or
4. Modify the notice of revocation and set or modify the date the revocation will take effect.

[S] 1703.8.1.3 Order. The *building official* shall issue an order containing the decision within ten days after the review is completed and shall cause the order to be sent by regular first class mail to the *persons* requesting the review, any other *person* on whom the notice of revocation was served and any other *person* who requested a copy before issuance of the order of the *building official*. The order of the *building official* is the final order of the City and all parties are bound by the final order.

SECTION 1704
SPECIAL INSPECTIONS AND TESTS, CONTRACTOR RESPONSIBILITY AND STRUCTURAL OBSERVATION

1704.1 General. Special inspections and tests, statements of special inspections, responsibilities of contractors, submittals to the *building official* and structural observations shall meet the applicable requirements of this section.

[S] 1704.2 Special inspections and tests. Where application is made to the *building official* for construction as specified in Section ((~~105~~)) 106, the owner or the owner's authorized agent, other than the contractor, shall employ one or more *approved agencies* to provide *special inspections* and tests during construction on the types of work specified in Section 1705 and identify the *approved agencies* to the *building official*. The *building official* may require additional *special inspectors* if the *building official* determines they are needed due to the magnitude or complexity of the job. These *special inspections* and tests are in addition to the inspections by the *building official* that are identified in Section ((~~110~~)) 108.

Exceptions:

1. *Special inspections* and tests are not required for construction of a minor nature or as warranted by conditions in the jurisdiction as *approved* by the *building official.*
2. Unless otherwise required by the *building official*, *special inspections* and tests are not required for Group U occupancies that are accessory to a residential occupancy including, but not limited to, those listed in Section 312.1.
3. *Special inspections* and tests are not required for portions of structures designed and constructed in accordance with the cold-formed steel light-frame construction provisions of Section 2211.1.2 or the conventional light-frame construction provisions of Section 2308.
4. The contractor is permitted to employ the *approved agencies* where the contractor is also the owner.

[S] 1704.2.1 Special inspector qualifications. Prior to the start of the construction, the *approved agencies* shall provide written documentation to the *building official* demonstrating the competence and relevant experience or training of the *special inspectors* who will perform the *special inspections* and tests during construction. Experience or training shall be considered to be relevant where the documented experience or training is related in complexity to the same type of *special inspection* or testing activities for projects of similar complexity and material qualities. Unless otherwise *approved* by the *building official*, all *special inspectors* shall be registered with the Washington Association of Building Officials. These qualifications are in addition to qualifications specified in other sections of this code.

The *registered design professional in responsible charge* and engineers of record involved in the design of the project are permitted to act as the *approved agency* and their personnel are permitted to act as special inspectors for the work designed by them, provided they qualify as special inspectors.

1704.2.1.1 Registration of special inspectors.

1704.2.1.1.1 Application for registration. Criteria for registration of *special inspectors* shall be established by the *building official* by rule.

DRAFT

1704.2.1.1.2 Issuance of certificate of registration. If the *building official* is satisfied that the applicant is qualified, a Certificate of Registration or a Limited Certificate of Registration shall be issued that specifies the types of inspection the applicant has been authorized to perform. Valid registration from the Washington Association of Building Officials is permitted to substitute for registration by the *building official.*

1704.2.1.1.3 Renewal of special inspector's registration. A Certificate of Registration or Limited Certificate of Registration is valid for the period of time to be determined by the *building official* by rule. Upon application for renewal of a Certificate of Registration, the *building official* is permitted to re-examine the applicant to ascertain his/her fitness to perform the inspection of the type or types for which the application was made.

1704.2.1.1.4 Revocation. *Special inspectors'* certifications are subject to revocation according to Section 1703.8.

[S] 1704.2.2 Access for special inspection. ((~~The~~)) It is the duty of the *person* requesting *special inspections* to provide that construction or work for which *special inspection* or testing is required ((~~shall remain~~)) is accessible and exposed for *special inspection* or testing purposes until completion of the required *special inspections* or tests.

1704.2.3 Statement of special inspections. The applicant shall submit a statement of *special inspections* ((~~in accordance with Section 107.1~~)) as a condition for permit issuance. This statement shall be in accordance with Section 1704.3.

Exception: A statement of *special inspections* is not required for portions of structures designed and constructed in accordance with the cold-formed steel light-frame construction provisions of Section 2211.1.2 or the conventional light-frame construction provisions of Section 2308.

((~~**1704.2.4 Report requirement.** *Approved agencies* shall keep records of special inspections and tests. The *approved agency* shall submit reports of *special* inspections and tests to the *building official* and to the *registered design professional in responsible charge*. Reports shall indicate that work inspected or tested was or was not completed in conformance to *approved construction documents*. Discrepancies shall be brought to the immediate attention of the contractor for correction. If they are not corrected, the discrepancies shall be brought to the attention of the *building official* and to the *registered design professional in responsible charge* prior to the completion of that phase of the work. A final report documenting required *special inspections* and tests, and correction of any discrepancies noted in the inspections or tests, shall be submitted at a point in time agreed upon prior to the start of work by the owner or the owner's authorized agent to the *building official.*~~))

[S] 1704.2.4 Responsibilities.

1704.2.4.1 Responsibilities of special inspector. The *special inspector* is responsible for conducting all *special inspection*s for which the *special inspector* was employed and notified and for carrying out the duties of a *special inspector* as specified in Section 1704.

1704.2.4.1.1 Specific duties. Registered *special inspectors* are regularly authorized deputies of the *building official* and are subject to all duties imposed by the *building official*, in addition to the following:

1. The registered *special inspector* shall be present during the execution of all assigned work. The registered *special inspector* shall report to the job sufficiently in advance of construction to become familiar with the plans and to inspect all materials to be used or concealed within the work. The *special inspector* shall inspect the construction, erection, placing, or other use of materials; and shall observe whether there is compliance with the *approved* design as to all of the foregoing. During the execution of all assigned work, the registered *special inspector* shall not undertake or engage in any other task or occupation that interferes with the proper performance of the inspection duties.
2. The registered *special inspector* shall not approve the placing of foundation concrete or pile caps prior to the approval of the soil condition or pile driving reports by the engineer who performed the *special inspection* for the pile installation.
3. The registered *special inspector* shall be employed only by an *approved* inspection or testing agency.
4. The registered *special inspector* shall not inspect work performed, or material supplied, by any contractor, subcontractor or material vendor with whom the inspector is employed.
5. If any registered *special inspector* is negligent in the performance of the inspector's duties, the *building official* is permitted to stop the work.

1704.2.4.1.2 Daily reports. The registered *special inspector* shall immediately report all irregularities, substitution of materials and violations to the contractor for correction, then if uncorrected, to the *registered design professional in responsible charge* and to the *building official.* At the conclusion of each inspection, the registered *special inspector* shall submit a report to the *registered design professional in responsible charge* and owner relative to the portion of the work inspected, stating whether the work requiring *special inspection* was, to the best of the *special inspector's* knowledge, in conformance with the *approved* plans and specifications and the applicable workmanship provisions of this code and related standards. The report shall be signed by the registered *special inspector.* One copy of the report shall be submitted to the *building official* by the *approved* inspection or testing agency no later than one week from the date of the inspection and shall be filed in the records of the agency's office. One copy of the report shall be left at the job

DRAFT

site by the *special inspector*. The *special inspector* shall also provide, as directed by the *building official* or by the *registered design professional in responsible charge* or owner, such other information as is required during the *special inspector's* assigned employment.

1704.2.4.1.3 Final report. The inspection or testing agency shall submit a final signed report listing the scope of required inspection and stating whether all work requiring *special inspection* was, to the best of the agency's knowledge, inspected and reported as specified on *construction documents*.

1704.2.4.2 Responsibility of owner. The owner or an authorized agent is responsible for notifying the *special inspector* when construction activity is scheduled that requires *special inspection*. If the owner designates another *person* to notify the *special inspector*, the owner retains the responsibility to assure that the *special inspections* are conducted and required reports submitted to the *building official*. The *approved* testing agency shall notify the *building official* and the *registered design professional in responsible charge* or owner of the commencement of inspection of a job and shall specify the type of inspection for which the special inspector has been engaged. This notification shall be made prior to commencement of inspection. The *approved* testing agency shall notify the *building official* prior to commencement of each day's inspection thereafter. The *building official* is permitted to require that every request for *special inspection* be filed at least one working day before the *special inspection* is desired. The request shall be made in writing or by telephone at the option of the *building official*.

1704.2.4.3 Posting special inspection record. The *building official* is permitted to require that work requiring *special inspection* not be commenced until the permit holder or the permit holder's agent posts an inspection log in a conspicuous place on the premises. The record shall be posted in a position which allows the *special inspector* to conveniently enter his/her identification, the date, and type of inspection performed. This record shall be maintained there by the permit holder until final approval has been granted by the *building official*.

[S] 1704.2.5 Special inspection of fabricated items. Where fabrication of structural, load-bearing or lateral load-resisting members or assemblies is being conducted on the premises of a fabricator's shop, *special inspections* of the *fabricated items* shall be performed during fabrication, except where the fabricator has been approved to perform work without special inspections in accordance with Section 1704.2.5.1. *Special inspections* are not required for steel members and assemblies produced by fabricators that are registered in the Washington Association of Building Officials (WABO) Steel Fabricator Registration Program.

Note: The City of Seattle does not register fabricators for products that are within the scope of the WABO registration program.

1704.2.5.1 Fabricator approval. *Special inspections* during fabrication are not required where the work is done on the premises of a fabricator approved according to the provisions of this chapter to perform such work without *special inspection.* ((~~Approval shall be based on review of the fabricator's written fabrication procedures and quality control manuals that provide a basis for control of materials and workmanship, with periodic auditing of fabrication and quality control practices by an *approved agency* or the *building official*. At completion of fabrication, the *approved* fabricator shall submit a *certificate of compliance* to the owner or the owner's authorized agent for submittal to the *building official* as specified in Section 1704.5 stating that the work was performed in accordance with the *approved construction documents*.~~))

1704.2.5.1.1 Application for registration. Application for registration as an *approved* fabricator shall be made to the *building official* by plants engaged in the manufacture of:

1. Prestressed or precast concrete structural products, and premixed concrete.
2. Unit masonry products.
3. Engineered wood products.
4. Prefabricated or assembly-line-produced metal products.
5. Other prefabricated products as the *building official* designates.

1704.2.5.1.2 Requirements for registration. The *building official* is authorized to examine manufacturing plants that submit applications for registration and shall issue certificates of registration if the plants have complied with the following requirements:

1. Develop and submit a detailed fabrication procedural manual reflecting key quality control procedures that will provide a basis for inspection control of the fabricating process.
2. Have the fabricator's quality control capabilities, operation of equipment and personnel as outlined in the fabrication procedural manual verified by an *approved* inspection or quality control agency.
3. Agree to have periodic plant inspections conducted by an approved inspection or quality control agency to monitor the effectiveness of the quality control program and to allow unannounced audits of the plant by the *building official*.

DRAFT

4. Agree to require the inspection or quality control agency to notify the *building official* in writing of any changes to the procedural manual.
5. Agree to submit a Certificate of Compliance, if required by the *building official*, that work was performed in accordance with the *approved* plans and specifications to the *building official* and to the *registered design professional in responsible charge*.
6. Pay a registration fee determined by the *building official* in accordance with provisions of the *Fee Subtitle*.

1704.2.5.1.3 Review by the building official for denial of registration of fabricators. The fabricator may request in writing a review before the *building official* to reconsider the decision to deny registration. The request shall be filed in writing with the *building official*.

1704.2.5.1.3.1 Review procedure. The review shall occur no later than 15 working days from receipt of the written request unless otherwise agreed by the *person* requesting the review. Any *person* affected by the decision to deny registration may submit additional information to the *building official* for consideration as part of the review at any time prior to the review. The review will be made by a representative of the *building official* who will review all additional information received. The reviewer may request clarification of the information and a site visit.

1704.2.5.1.3.2 Decision. After the review, the *building official* shall:

1. Sustain the denial of registration;
2. Withdraw the denial of registration;
3. Modify the decision to deny registration; or
4. Continue the review to a date certain.

1704.2.5.1.3.3 Order. The *building official* shall issue an order within ten days after the review is completed and shall send it by regular first class mail to the *person* or *persons* requesting the review and any other *person* who requested a copy.

1704.2.5.1.4 Renewal of registration. Registration of *approved* fabricators is valid for one year from the date of issuance and is subject to renewal annually. Registration may be renewed upon application, contingent on compliance with quality control procedures during the past year and payment of a fee in accordance with provisions of the *Fee Subtitle*. The *building official* is authorized to revoke registration for cause.

1704.2.5.1.5 Fees. Fees for examination and registration of *special inspectors* are determined by the *building official* in accordance with the *Fee Subtitle*.

1704.3 Statement of special inspections. Where *special inspections* or tests are required by Section 1705, the *registered design professional in responsible charge* shall prepare a statement of *special inspections* in accordance with Section 1704.3.1 for submittal by the applicant in accordance with Section 1704.2.3.

Exception: The statement of *special inspections* is permitted to be prepared by a qualified person *approved* by the *building official* for construction not designed by a *registered design professional*.

[S] 1704.3.1 Content of statement of special inspections. The statement of *special inspections* shall identify the following:

1. The materials, systems, components and work required to have *special inspections* or tests by the *building official* or by the *registered design professional* responsible for each portion of the work.
2. The type and extent of each *special inspection*, if required by the *building official*.
3. The type and extent of each test, if required by the *building official*.
4. Additional requirements for *special inspections* or tests for seismic or wind resistance as specified in Sections 1705.11, 1705.12 and 1705.13.
5. For each type of *special inspection*, identification as to whether it will be continuous *special inspection*, periodic *special inspection* or performed in accordance with the notation used in the referenced standard where the inspections are defined.

1704.3.2 Seismic requirements in the statement of special inspections. Where Section 1705.12 or 1705.13 specifies *special inspections* or tests for seismic resistance, the statement of *special inspections* shall identify the designated seismic systems and seismic force-resisting systems that are subject to the *special inspections* or tests.

1704.3.3 Wind requirements in the statement of special inspections. Where Section 1705.11 specifies *special inspection* for wind resistance, the statement of *special inspections* shall identify the main windforce-resisting systems and wind-resisting components that are subject to *special inspections*.

DRAFT

[S] ((~~1704.4 Contractor responsibility.~~ ~~Each contractor responsible for the construction of a main wind- or seismic force-resisting system, designated seismic system or a wind- or seismic force-resisting component listed in the statement of special inspections shall submit a written statement of responsibility to the *building official* and the owner or the owner's authorized agent prior to the commencement of work on the system or component. The contractor's statement of responsibility shall contain acknowledgement of awareness of the special requirements contained in the statement of *special inspections*.~~))

1704.5 Submittals to the building official. In addition to the submittal of reports of *special inspections* and tests in accordance with Section 1704.2.4, reports and certificates shall be submitted by the owner or the owner's authorized agent to the *building official* for each of the following:

1. *Certificates of compliance* for the fabrication of structural, load-bearing or lateral load-resisting members or assemblies on the premises of an *approved fabricator* in accordance with Section 1704.2.5.1.
2. *Certificates of compliance* for the seismic qualification of nonstructural components, supports and attachments in accordance with Section 1705.13.2.
3. *Certificates of compliance* for *designated seismic systems* in accordance with Section 1705.13.3.
4. Reports of preconstruction tests for shotcrete in accordance with Section 1908.5.
5. *Certificates of compliance* for open web steel joists and joist girders in accordance with Section 2207.5.
6. Reports of material properties verifying compliance with the requirements of AWS D1.4 for weldability as specified in Section 26.6.4 of ACI 318 for reinforcing bars in concrete complying with a standard other than ASTM A706 that are to be welded.
7. Reports of mill tests in accordance with Section 20.2.2.5 of ACI 318 for reinforcing bars complying with ASTM A615 and used to resist earthquake-induced flexural or axial forces in the special moment frames, special structural walls or coupling beams connecting special structural walls of *seismic force-resisting systems* in *structures* assigned to *Seismic Design Category* B, C, D, E or F.

[S] 1704.6 Structural observations. Where required by the provisions of Section 1704.6.1, 1704.6.2 or 1704.6.3, the owner or the owner's authorized agent shall employ a *registered design professional* to perform structural observations. Structural observation does not include or waive the responsibility for the inspections in Section ((~~110~~)) 108 or the *special inspections* in Section 1705 or other sections of this code.

Prior to the commencement of observations, the structural observer shall submit to the *building official* a written statement identifying the frequency and extent of structural observations.

At the conclusion of the work included in the permit, the structural observer shall submit to the *building official* a written statement that the site visits have been made and identify any reported deficiencies that, to the best of the structural observer's knowledge, have not been resolved.

1704.6.1 Structural observations for structures. Structural observations shall be provided for those structures where one or more of the following conditions exist:

1. The structure is classified as *Risk Category IV*.
2. The structure is a *high-rise building*.
3. Such observation is required by the *registered design professional* responsible for the structural design.
4. The structure includes five *stories* of wood-frame construction.

((~~4~~)) 5. Such observation is specifically required by the *building official*.

1704.6.2 Structural observations for seismic resistance. Structural observations shall be provided for those structures assigned to *Seismic Design Category* D, E or F where one or more of the following conditions exist:

1. The structure is classified as *Risk Category* III or IV.
2. The structure is assigned to *Seismic Design Category* E, is classified as *Risk Category* I or II, and is greater than two *stories above* the *grade plane*.

1704.6.3 Structural observations for wind resistance. Structural observations shall be provided for those structures sited where *V* is 130 mph (58 m/sec) or greater and the structure is classified as *Risk Category* III or IV.

SECTION 1705
REQUIRED SPECIAL INSPECTIONS AND TESTS

1705.1 General. *Special inspections* and tests of elements and nonstructural components of buildings and structures shall meet the applicable requirements of this section.

DRAFT

1705.1.1 Special cases. *Special inspections* and tests shall be required for proposed work that is, in the opinion of the building official, unusual in its nature, such as, but not limited to, the following examples:

1. Construction materials and systems that are alternatives to materials and systems prescribed by this code.
2. Unusual design applications of materials described in this code.
3. Materials and systems required to be installed in accordance with additional manufacturer's instructions that prescribe requirements not contained in this code or in standards referenced by this code.

[S] 1705.2 Steel construction. The *special inspections* and nondestructive testing of steel construction in buildings, structures, and portions thereof shall be in accordance with this section.

Exception: *Special inspections* of the steel fabrication process shall not be required where the fabrication process for the entire building or structure does not include any welding, thermal cutting or heating operation of any kind. ((~~In such cases, the fabricator shall be required to submit a detailed procedure for material control that demonstrates the fabricator's ability to maintain suitable records and procedures such that, at any time during the fabrication process, the material specification and grade for the main stress-carrying elements are capable of being determined. Mill test reports shall be identifiable to the main stress-carrying elements where required by the *approved construction documents*.~~))

1705.2.1 Structural steel. *Special inspections* and nondestructive testing of *structural steel elements* in buildings, structures and portions thereof shall be in accordance with the quality assurance inspection requirements of AISC 360.

Exception: *Special inspection* of railing systems composed of *structural steel elements* shall be limited to welding inspection of welds at the base of cantilevered rail posts.

1705.2.2 Cold-formed steel deck. *Special inspections* and qualification of welding special inspectors for cold-formed steel floor and roof deck shall be in accordance with the quality assurance inspection requirements of SDI QA/QC.

1705.2.3 Open-web steel joists and joist girders. *Special inspections* of open-web steel joists and joist girders in buildings, structures and portions thereof shall be in accordance with Table 1705.2.3.

TABLE 1705.2.3
REQUIRED SPECIAL INSPECTIONS OF OPEN-WEB STEEL JOISTS AND JOIST GIRDERS

TYPE	CONTINUOUS SPECIAL INSPECTION	PERIODIC SPECIAL INSPECTION	REFERENCED STANDARD[a]
1. Installation of open-web steel joists and joist girders.			
a. End connections – welding or bolted.	—	X	SJI specifications listed in Section 2207.1.
b. Bridging – horizontal or diagonal.	—	—	—
1. Standard bridging.	—	X	SJI specifications listed in Section 2207.1.
2. Bridging that differs from the SJI specifications listed in Section 2207.1.	—	X	—

For SI: 1 inch = 25.4 mm.
a. Where applicable, see Section 1705.12, Special inspections for seismic resistance.

1705.2.4 Cold-formed steel trusses spanning 60 feet or greater. Where a cold-formed steel truss clear span is 60 feet (18 288 mm) or greater, the special inspector shall verify that the temporary installation restraint/bracing and the permanent individual truss member restraint/bracing are installed in accordance with the *approved* truss submittal package.

1705.3 Concrete construction. *Special inspections* and tests of concrete construction shall be performed in accordance with this section and Table 1705.3.

Exception: *Special inspections* and tests shall not be required for:

1. Isolated spread concrete footings of buildings three stories or less above *grade plane* that are fully supported on earth or rock.
2. Continuous concrete footings supporting walls of buildings three stories or less above *grade plane* that are fully supported on earth or rock where:
   - 2.1. The footings support walls of light-frame construction.
   - 2.2. The footings are designed in accordance with Table 1809.7.
   - 2.3. The structural design of the footing is based on a specified compressive strength, f'_c, not more than 2,500 pounds per square inch (psi) (17.2 MPa), regardless of the compressive strength specified in the *approved construction documents* or used in the footing construction.
3. Nonstructural concrete slabs supported directly on the ground, including prestressed slabs on grade, where the effective prestress in the concrete is less than 150 psi (1.03 MPa).

DRAFT

4. Concrete foundation walls constructed in accordance with Table 1807.1.6.2.
5. Concrete patios, driveways and sidewalks, on grade.

[S] TABLE 1705.3
REQUIRED SPECIAL INSPECTIONS AND TESTS OF CONCRETE CONSTRUCTION

TYPE	CONTINUOUS SPECIAL INSPECTION	PERIODIC SPECIAL INSPECTION	REFERENCED STANDARD[a]	IBC REFERENCE
1. Inspect reinforcement, including prestressing tendons, and verify placement.	—	X	ACI 318: Ch. 20, 25.2, 25.3, 26.6.1-26.6.3	1908.4
2. Reinforcing bar welding: a. Verify weldability of reinforcing bars other than ASTM A706; b. Inspect single-pass fillet welds, maximum 5/16″; and c. Inspect all other welds.	— X	X X	AWS D1.4 ACI 318: 26.6.4	—
3. Inspect anchors cast in concrete.	—	X	ACI 318: 17.8.2	—
4. Inspect anchors post-installed in hardened concrete members.[b] a. Adhesive anchors installed in horizontally or upwardly inclined orientations to resist sustained tension loads. b. Mechanical anchors and adhesive anchors not defined in 4.a.	X	X	ACI 318: 17.8.2.4 ACI 318: 17.8.2	—
5. Verify use of required design mix.	—	X	ACI 318: Ch. 19, 26.4.3, 26.4.4	1904.1, 1904.2, 1908.2, 1908.3
6. Prior to concrete placement, fabricate specimens for strength tests, perform slump and air content tests, and determine the temperature of the concrete.	X	—	ASTM C172 ASTM C31 ACI 318: 26.5, 26.12	1908.10
7. Inspect concrete and shotcrete placement for proper application techniques.	X	—	ACI 318: 26.5	1908.6, 1908.7, 1908.8
8. Verify maintenance of specified curing temperature and techniques.	—	X	ACI 318: 26.5.3-26.5.5	1908.9
9. Inspect prestressed concrete for: a. Application of prestressing forces; and b. Grouting of bonded prestressing tendons.	 X X	 — —	ACI 318: 26.10	—
10. Inspect erection of precast concrete members.	—	X	ACI 318: 26.9	—
11. Verify in-situ concrete strength, prior to stressing of tendons in post-tensioned concrete and prior to removal of shores and forms from beams and structural slabs.	—	X	ACI 318: 26.11.2	—
12. Inspect formwork for general conformity to approved plans for size and shape, ((~~location and dimensions~~)) of the concrete member being formed.	—	X	ACI 318: 26.11.1.2(b)	—

For SI: 1 inch = 25.4 mm.

a. Where applicable, see Section 1705.12, Special inspections for seismic resistance.

b. Specific requirements for special inspection shall be included in the research report for the anchor issued by an approved source in accordance with 17.8.2 in ACI 318, or other qualification procedures. Where specific requirements are not provided, special inspection requirements shall be specified by the registered design professional and shall be approved by the building official prior to the commencement of the work.

1705.3.1 Welding of reinforcing bars. *Special inspections* of welding and qualifications of *special inspectors* for reinforcing bars shall be in accordance with the requirements of AWS D1.4 for *special inspection* and of AWS D1.4 for special inspector qualification.

1705.3.2 Material tests. In the absence of sufficient data or documentation providing evidence of conformance to quality standards for materials in Chapters 19 and 20 of ACI 318, the *building official* shall require testing of materials in accordance with the appropriate standards and criteria for the material in Chapters 19 and 20 of ACI 318.

DRAFT

1705.3.3 Inspection during concrete mixing. *Special inspections* are required during mixing of concrete under one of the following circumstances:

1. Concrete mixes prepared in a batch plant that is not certified by The City of Seattle;
2. All structural lightweight concrete mixes;
3. Concrete mixes with f'_c greater than 6000 psi (41.4 Mpa);
4. Concrete mixes containing alternative materials addressed in Section 1705.3.2; or
5. Other unusual circumstances as determined by the *building official.*

Exception: Inspection during the mixing of concrete is not required if the proportions of ingredients are established in accordance with Table 1905.1.10 or if a mix has been granted continuous approval by the *building official.*

1705.4 Masonry construction. *Special inspections* and tests of masonry construction shall be performed in accordance with the quality assurance program requirements of TMS 402 and TMS 602.

Exception: *Special inspections* and tests shall not be required for:

1. Empirically designed masonry, glass unit masonry or masonry veneer designed in accordance with Section 2109, 2110 or Chapter 14, respectively, where they are part of a structure classified as *Risk Category* I, II or III.
2. Masonry foundation walls constructed in accordance with Table 1807.1.6.3(1), 1807.1.6.3(2), 1807.1.6.3(3) or 1807.1.6.3(4).
3. Masonry fireplaces, masonry heaters or masonry chimneys installed or constructed in accordance with Section 2111, 2112 or 2113, respectively.

1705.4.1 Empirically designed masonry, glass unit masonry and masonry veneer in Risk Category IV. *Special inspections* and tests for empirically designed masonry, glass unit masonry or masonry veneer designed in accordance with Section 2109, 2110 or Chapter 14, respectively, where they are part of a structure classified as *Risk Category* IV shall be performed in accordance with TMS 602, Level 2.

1705.4.2 Vertical masonry foundation elements. *Special inspections* and tests of *vertical masonry foundation elements* shall be performed in accordance with Section 1705.4.

1705.5 Wood construction. *Special inspections* of prefabricated wood structural elements and assemblies shall be in accordance with Section 1704.2.5. *Special inspections* of site-built assemblies shall be in accordance with this section.

1705.5.1 High-load diaphragms. High-load diaphragms designed in accordance with Section 2306.2 shall be installed with *special inspections* as indicated in Section 1704.2. The special inspector shall inspect the wood structural panel sheathing to ascertain whether it is of the grade and thickness shown on the *approved construction documents*. Additionally, the special inspector must verify the nominal size of framing members at adjoining panel edges, the nail or staple diameter and length, the number of fastener lines and that the spacing between fasteners in each line and at edge margins agrees with the *approved construction documents.*

1705.5.2 Metal-plate-connected wood trusses spanning 60 feet or greater. Where a truss clear span is 60 feet (18 288 mm) or greater, the special inspector shall verify that the temporary installation restraint/bracing and the permanent individual truss member restraint/bracing are installed in accordance with the approved truss submittal package.

[W] 1705.5.3 Mass timber construction. *Special inspections* of *mass timber* elements in Types IV-A, IV-B, and IV-C construction shall be in accordance with Table 1705.5.3.

[W] TABLE 1705.5.3
REQUIRED SPECIAL INSPECTIONS OF MASS TIMBER CONSTRUCTION

TYPE	CONTINUOUS SPECIAL INSPECTION	PERIODIC SPECIAL INSPECTION
1. Inspection of anchorage and connections of mass timber construction to timber deep foundation systems.		X
2. Inspect erection and sequence of mass timber construction.		X
3. Inspection of connections where installation methods are required to meet design loads.		
3.1. Threaded fasteners.		
3.1.1. Verify use of proper installation equipment.		X
3.1.2. Verify use of predrilled holes where required.		X
3.1.3. Inspect screws, including diameter, length, head type, spacing, installation angle, and depth.		X
3.2. Adhesive anchors installed in horizontal or upwardly inclined orientation to resist sustained tension loads.	X	
3.3. Adhesive anchors not defined in 3.2.		X
3.4. Bolted connections.		X
3.5. Concealed connection.		X

DRAFT

1705.6 Soils. *Special inspections* and tests of existing site soil conditions, fill placement and load-bearing requirements shall be performed in accordance with this section and Table 1705.6. The *approved* geotechnical report and the *construction documents* prepared by the *registered design professionals* shall be used to determine compliance. During fill placement, the special inspector shall verify that proper materials and procedures are used in accordance with the provisions of the *approved* geotechnical report.

Exception: Where Section 1803 does not require reporting of materials and procedures for fill placement, the special inspector shall verify that the in-place dry density of the compacted fill is not less than 90 percent of the maximum dry density at optimum moisture content determined in accordance with ASTM D1557.

TABLE 1705.6
REQUIRED SPECIAL INSPECTIONS AND TESTS OF SOILS

TYPE	CONTINUOUS SPECIAL INSPECTION	PERIODIC SPECIAL INSPECTION
1. Verify materials below shallow foundations are adequate to achieve the design bearing capacity.	—	X
2. Verify excavations are extended to proper depth and have reached proper material.	—	X
3. Perform classification and testing of compacted fill materials.	—	X
4. Verify use of proper materials, densities and lift thicknesses during placement and compaction of compacted fill.	X	—
5. Prior to placement of compacted fill, inspect subgrade and verify that site has been prepared properly.	—	X

1705.7 Driven deep foundations. *Special inspections* and tests shall be performed during installation of driven deep foundation elements as specified in Table 1705.7. The approved geotechnical report and the *construction documents* prepared by the *registered design professionals* shall be used to determine compliance.

TABLE 1705.7
REQUIRED SPECIAL INSPECTIONS AND TESTS OF DRIVEN DEEP FOUNDATION ELEMENTS

TYPE	CONTINUOUS SPECIAL INSPECTION	PERIODIC SPECIAL INSPECTION
1. Verify element materials, sizes and lengths comply with the requirements.	X	—
2. Determine capacities of test elements and conduct additional load tests, as required.	X	—
3. Inspect driving operations and maintain complete and accurate records for each element.	X	—
4. Verify placement locations and plumbness, confirm type and size of hammer, record number of blows per foot of penetration, determine required penetrations to achieve design capacity, record tip and butt elevations and document any damage to foundation element.	X	—
5. For steel elements, perform additional special inspections in accordance with Section 1705.2.	—	—
6. For concrete elements and concrete-filled elements, perform tests and additional special inspections in accordance with Section 1705.3.	—	—
7. For specialty elements, perform additional inspections as determined by the registered design professional in responsible charge.	—	—

1705.8 Cast-in-place deep foundations. *Special inspections* and tests shall be performed during installation of cast-in-place deep foundation elements as specified in Table 1705.8. The *approved* geotechnical report and the *construction documents* prepared by the *registered design professionals* shall be used to determine compliance.

TABLE 1705.8
REQUIRED SPECIAL INSPECTIONS AND TESTS OF CAST-IN-PLACE DEEP FOUNDATION ELEMENTS

TYPE	CONTINUOUS SPECIAL INSPECTION	PERIODIC SPECIAL INSPECTION
1. Inspect drilling operations and maintain complete and accurate records for each element.	X	—
2. Verify placement locations and plumbness, confirm element diameters, bell diameters (if applicable), lengths, embedment into bedrock (if applicable) and adequate end-bearing strata capacity. Record concrete or grout volumes.	X	—
3. For concrete elements, perform tests and additional special inspections in accordance with Section 1705.3.	—	—

DRAFT

1705.9 Helical pile foundations. *Continuous special inspections* shall be performed during installation of helical pile foundations. The information recorded shall include installation equipment used, pile dimensions, tip elevations, final depth, final installation torque and other pertinent installation data as required by the *registered design professional in responsible charge*. The *approved* geotechnical report and the *construction documents* prepared by the *registered design professional* shall be used to determine compliance.

1705.10 Fabricated items. *Special inspections* of *fabricated items* shall be performed in accordance with Section 1704.2.5.

1705.11 Special inspections for wind resistance. *Special inspections* for wind resistance specified in Sections 1705.11.1 through 1705.11.3, unless exempted by the exceptions to Section 1704.2, are required for buildings and structures constructed in the following areas:

1. In wind Exposure Category B, where V_{asd} as determined in accordance with Section 1609.3.1 is 120 miles per hour (52.8 m/sec) or greater.
2. In wind Exposure Category C or D, where V_{asd} as determined in accordance with Section 1609.3.1 is 110 mph (49 m/sec) or greater.

[W] 1705.11.1 Structural wood. *Continuous special inspection* is required during field gluing operations of elements of the main windforce-resisting system. *Periodic special inspection* is required for nailing, bolting, anchoring and other fastening of elements of the main windforce-resisting system, including wood shear walls, wood diaphragms, drag struts, braces and hold-downs.

Exception: *Special inspections* are not required for wood shear walls, shear panels and diaphragms, including nailing, bolting, anchoring and other fastening to other elements of the main windforce-resisting system, where the ((~~specified~~)) lateral resistance is provided by sheathing of wood structural panels, and the fastener spacing ((~~at panel edges~~)) of the sheathing is more than 4 inches (102 mm) on center.

1705.11.2 Cold-formed steel light-frame construction. *Periodic special inspection* is required for welding operations of elements of the main windforce-resisting system. *Periodic special inspection* is required for screw attachment, bolting, anchoring and other fastening of elements of the main windforce-resisting system, including shear walls, braces, diaphragms, collectors (drag struts) and hold-downs.

Exception: *Special inspections* are not required for cold-formed steel light-frame shear walls and diaphragms, including screwing, bolting, anchoring and other fastening to components of the windforce resisting system, where either of the following applies:

1. The sheathing is gypsum board or fiberboard.
2. The sheathing is wood structural panel or steel sheets on only one side of the shear wall, shear panel or diaphragm assembly and the fastener spacing of the sheathing is more than 4 inches (102 mm) on center (o.c.).

1705.11.3 Wind-resisting components. *Periodic special inspection* is required for fastening of the following systems and components:

1. Roof covering, roof deck and roof framing connections.
2. Exterior wall covering and wall connections to roof and floor diaphragms and framing.

1705.12 Special inspections for seismic resistance. *Special inspections* for seismic resistance shall be required as specified in Sections 1705.12.1 through 1705.12.9, unless exempted by the exceptions of Section 1704.2.

Exception: The *special inspections* specified in Sections 1705.12.1 through 1705.12.9 are not required for structures designed and constructed in accordance with one of the following:

1. The structure consists of light-frame construction; the design spectral response acceleration at short periods, S_{DS}, as determined in Section 1613.2.4, does not exceed 0.5; and the *building height* of the structure does not exceed 35 feet (10 668 mm).
2. The seismic force-resisting system of the structure consists of reinforced masonry or reinforced concrete; the design spectral response acceleration at short periods, S_{DS}, as determined in Section 1613.2.4, does not exceed 0.5; and the *building height* of the structure does not exceed 25 feet (7620 mm).
3. The structure is a detached one- or two-family dwelling not exceeding two *stories above grade plane* and does not have any of the following horizontal or vertical irregularities in accordance with Section 12.3 of ASCE 7:
   - 3.1. Torsional or extreme torsional irregularity.
   - 3.2. Nonparallel systems irregularity.
   - 3.3. Stiffness-soft story or stiffness-extreme soft story irregularity.
   - 3.4. Discontinuity in lateral strength-weak story irregularity.

DRAFT

1705.12.1 Structural steel. *Special inspections* for seismic resistance shall be in accordance with Section 1705.12.1.1 or 1705.12.1.2, as applicable.

1705.12.1.1 Seismic force-resisting systems. *Special inspections* of structural steel in the seismic force-resisting systems in buildings and structures assigned to *Seismic Design Category* B, C, D, E or F shall be performed in accordance with the quality assurance requirements of AISC 341.

Exceptions:

1. In buildings and structures assigned to *Seismic Design Category* B or C, *special inspections* are not required for structural steel seismic force-resisting systems where the response modification coefficient, *R*, designated for "Steel systems not specifically detailed for seismic resistance, excluding cantilever column systems" in ASCE 7, Table 12.2-1, has been used for design and detailing.
2. In structures assigned to *Seismic Design Category* D, E, or F, *special inspections* are not required for structural steel seismic force-resisting systems where design and detailing in accordance with AISC 360 is permitted by ASCE 7, Table 15.4-1.

1705.12.1.2 Structural steel elements. *Special inspections* of *structural steel elements* in the seismic force-resisting systems of buildings and structures assigned to *Seismic Design Category* B, C, D, E or F other than those covered in Section 1705.12.1.1, including struts, collectors, chords and foundation elements, shall be performed in accordance with the quality assurance requirements of AISC 341.

Exceptions:

1. In buildings and structures assigned to *Seismic Design Category* B or C, *special inspections* of *structural steel elements* are not required for seismic force-resisting systems with a response modification coefficient, *R*, of 3 or less.
2. In structures assigned to *Seismic Design Category* D, E, or F, *special inspections* of *structural steel elements* are not required for seismic force-resisting systems where design and detailing other than AISC 341 is permitted by ASCE 7, Table 15.4-1. *Special inspection* shall be in accordance with the applicable referenced standard listed in ASCE 7, Table 15.4-1.

[W][S] 1705.12.2 Structural wood. For the seismic force-resisting systems of structures assigned to *Seismic Design Category* C, D, E or F:

1. *Continuous special inspection* shall be required during field gluing operations of elements of the seismic force-resisting system.
2. *Periodic special inspection* shall be required for nailing, bolting, anchoring and other fastening of elements of the seismic force-resisting system, including wood shear walls, wood diaphragms, drag struts, braces, shear panels and hold-downs.

Exceptions:

1. *Special inspections* are not required for wood shear walls, shear panels and diaphragms, including nailing, bolting, anchoring and other fastening to other elements of the seismic force-resisting system other than adhesive-grouted anchor bolts, where the lateral resistance is provided by sheathing of wood structural panels, and the fastener spacing of the sheathing is more than 4 inches (102 mm) on center.
2. *Special inspection* is not required for Group R-3 structures for other than structural insulated panels used as shear walls.
3. *Special inspection* is not required in Group R-1 and R-2 structures three *stories* and less in height for other than structural insulated panels used as shear walls.
4. *Special inspection* is not required for adhesive-grouted anchor bolts in Group R-1 and R-2 buildings if wood shear-wall fastener spacing is 4 inches (102 mm) or more on center (o.c.) and hold down capacities are less than 5,000 pounds (22.2 kN).

1705.12.3 Cold-formed steel light-frame construction. For the seismic force-resisting systems of structures assigned to *Seismic Design Category* C, D, E or F, periodic special inspection shall be required for both:

1. Welding operations of elements of the seismic force-resisting system.
2. Screw attachment, bolting, anchoring and other fastening of elements of the seismic force-resisting system, including shear walls, braces, diaphragms, collectors (drag struts) and hold-downs.

Exception: *Special inspections* are not required for cold-formed steel light-frame shear walls and diaphragms, including screw installation, bolting, anchoring and other fastening to components of the seismic force-resisting system, where either of the following applies:

1. The sheathing is gypsum board or fiberboard.

DRAFT

2. The sheathing is wood structural panel or steel sheets on only one side of the shear wall, shear panel or diaphragm assembly and the fastener spacing of the sheathing is more than 4 inches (102 mm) on center.

1705.12.4 Designated seismic systems. For structures assigned to *Seismic Design Category* C, D, E or F, the special inspector shall examine *designated seismic systems* requiring seismic qualification in accordance with Section 13.2.2 of ASCE 7 and verify that the label, anchorage and mounting conform to the *certificate of compliance*.

1705.12.5 Architectural components. *Periodic special inspection* is required for the erection and fastening of exterior cladding, interior and exterior nonbearing walls and interior and exterior veneer in structures assigned to *Seismic Design Category* D, E or F.

Exception: *Periodic special inspection* is not required for the following:

1. Exterior cladding, interior and exterior nonbearing walls and interior and exterior veneer 30 feet (9144 mm) or less in height above grade or walking surface.
2. Exterior cladding and interior and exterior veneer weighing 5 psf (24.5 N/m^2) or less.
3. Interior nonbearing walls weighing 15 psf (73.5 N/m^2) or less.

1705.12.5.1 Access floors. Periodic *special inspection* is required for the anchorage of access floors in structures assigned to *Seismic Design Category* D, E or F.

[W] 1705.12.6 Plumbing, mechanical and electrical components. *Periodic special inspection* of plumbing, mechanical and electrical components shall be required for the following:

1. Anchorage of electrical equipment for emergency and standby power systems in structures assigned to *Seismic Design Category* C, D, E or F.
2. Anchorage of other electrical equipment in structures assigned to *Seismic Design Category* E or F.
3. Installation and anchorage of piping systems designed to carry hazardous materials and their associated mechanical units in structures assigned to *Seismic Design Category* C, D, E or F.
4. Installation and anchorage of ductwork designed to carry hazardous materials in structures assigned to *Seismic Design Category* C, D, E or F.
5. Installation and anchorage of vibration isolation systems in structures assigned to *Seismic Design Category* C, D, E or F where the *approved construction documents* require a nominal clearance of 1/4 inch (6.4 mm) or less between the equipment support frame and restraint.
6. Installation of mechanical and electrical equipment, including duct work, piping systems and their structural supports, where automatic fire sprinkler systems are installed in *Risk Category IV* structures assigned to Seismic Design Category C, D, E or F to verify one of the following:
   6.1. Minimum clearances have been provided as required by Section 13.2.3 ASCE/SEI 7.
   6.2. A nominal clearance of not less than 3 inches (76 mm) has been be provided between fire protection sprinkler system drops and sprigs and: structural members not used collectively or independently to support the sprinklers; equipment attached to the building structure; and other systems' piping.

   Where flexible sprinkler hose fittings are used, special inspection of minimum clearances is not required.

1705.12.7 Storage racks. *Periodic special inspection* is required for the anchorage of storage racks that are 8 feet (2438 mm) or greater in height in structures assigned to *Seismic Design Category* D, E or F.

1705.12.8 Seismic isolation systems. *Periodic special inspection* shall be provided for seismic isolation systems in seismically isolated structures assigned to *Seismic Design Category* B, C, D, E or F during the fabrication and installation of isolator units and energy dissipation devices.

1705.12.9 Cold-formed steel special bolted moment frames. *Periodic special inspection* shall be provided for the installation of cold-formed steel special bolted moment frames in the *seismic force-resisting systems* of structures assigned to *Seismic Design Category* D, E or F.

1705.13 Testing for seismic resistance. Testing for seismic resistance shall be required as specified in Sections 1705.13.1 through 1705.13.4, unless exempted from *special inspections* by the exceptions of Section 1704.2.

1705.13.1 Structural steel. Nondestructive testing for seismic resistance shall be in accordance with Section 1705.13.1.1 or 1705.13.1.2, as applicable.

1705.13.1.1 Seismic force-resisting systems. Nondestructive testing of structural steel in the seismic force-resisting systems in buildings and structures assigned to *Seismic Design Category* B, C, D, E or F shall be performed in accordance with the quality assurance requirements of AISC 341.

DRAFT

Exceptions:

1. In buildings and structures assigned to *Seismic Design Category* B or C, nondestructive testing is not required for structural steel seismic force-resisting systems where the response modification coefficient, *R*, designated for "Steel systems not specifically detailed for seismic resistance, excluding cantilever column systems" in ASCE 7, Table 12.2-1, has been used for design and detailing.
2. In structures assigned to *Seismic Design Category* D, E, or F, nondestructive testing is not required for structural steel seismic force-resisting systems where design and detailing in accordance with AISC 360 is permitted by ASCE 7, Table 15.4-1.

1705.13.1.2 Structural steel elements. Nondestructive testing of structural steel elements in the seismic force-resisting systems of buildings and structures assigned to *Seismic Design Category* B, C, D, E or F other than those covered in Section 1705.13.1.1, including struts, collectors, chords and foundation elements, shall be performed in accordance with the quality assurance requirements of AISC 341.

Exceptions:

1. In buildings and structures assigned to *Seismic Design Category* B or C, nondestructive testing of *structural steel elements* is not required for seismic force-resisting systems with a response modification coefficient, *R*, of 3 or less.
2. In structures assigned to *Seismic Design Category* D, E or F, nondestructive testing of *structural steel elements* is not required for seismic force-resisting systems where design and detailing other than AISC 341 is permitted by ASCE 7, Table 15.4-1. Nondestructive testing of *structural steel elements* shall be in accordance with the applicable referenced standard listed in ASCE 7, Table 15.4-1.

1705.13.2 Nonstructural components. For structures assigned to *Seismic Design Category* B, C, D, E or F, where the requirements of Section 13.2.1 of ASCE 7 for nonstructural components, supports or attachments are met by seismic qualification as specified in Item 2 therein, the *registered design professional* shall specify on the *approved construction documents* the requirements for seismic qualification by analysis, testing or experience data. *Certificates of compliance* for the seismic qualification shall be submitted to the *building official* as specified in Section 1704.5.

1705.13.3 Designated seismic systems. For structures assigned to *Seismic Design Category* C, D, E or F and with *designated seismic systems* that are subject to the requirements of Section 13.2.2 of ASCE 7 for certification, the *registered design professional* shall specify on the *approved construction documents* the requirements to be met by analysis, testing or experience data as specified therein. *Certificates of compliance* documenting that the requirements are met shall be submitted to the *building official* as specified in Section 1704.5.

1705.13.4 Seismic isolation systems. Seismic isolation systems in seismically isolated structures assigned to *Seismic Design Category* B, C, D, E or F shall be tested in accordance with Section 17.8 of ASCE 7.

[BF] 1705.14 Sprayed fire-resistant materials. *Special inspections* and tests of sprayed fire-resistant materials applied to floor, roof and wall assemblies and structural members shall be performed in accordance with Sections 1705.14.1 through 1705.14.6. *Special inspections* shall be based on the fire-resistance design as designated in the *approved construction documents*. The tests set forth in this section shall be based on samplings from specific floor, roof and wall assemblies and structural members. *Special inspections* and tests shall be performed after the rough installation of electrical, automatic sprinkler, mechanical and plumbing systems and suspension systems for ceilings, where applicable.

[BF] 1705.14.1 Physical and visual tests. The *special inspections* and tests shall include the following to demonstrate compliance with the listing and the *fire-resistance rating*:

1. Condition of substrates.
2. Thickness of application.
3. Density in pounds per cubic foot (kg/m^3).
4. Bond strength adhesion/cohesion.
5. Condition of finished application.

[BF] 1705.14.2 Structural member surface conditions. The surfaces shall be prepared in accordance with the *approved* fire-resistance design and the written instructions of *approved* manufacturers. The prepared surface of structural members to be sprayed shall be inspected by the special inspector before the application of the sprayed fire-resistant material.

[S][BF] 1705.14.3 Application. The substrate shall have a minimum ambient temperature before and after application as specified in the written instructions of *approved* manufacturers. ((~~The area for application shall be ventilated during and after application as required by the written instructions of *approved* manufacturers.~~))

DRAFT

[S] ((~~1705.16 Exterior insulation and finish systems (EIFS).~~ ~~*Special inspections* shall be required for all EIFS applications.~~

~~**Exceptions:**~~

1. ~~*Special inspections* shall not be required for EIFS applications installed over a *water-resistive barrier* with a means of draining moisture to the exterior.~~
2. ~~*Special inspections* shall not be required for EIFS applications installed over masonry or concrete walls.~~

~~**1705.16.1 Water-resistive barrier coating.** A *water-resistive barrier* coating complying with ASTM E2570 requires *special inspection* of the *water-resistive barrier* coating where installed over a sheathing substrate.~~))

[W] 1705.16 Sealing of mass timber. Periodic special inspections of sealants or adhesives shall be conducted where sealant or adhesive required by Section 703.9 is applied to mass timber building elements as designated in the approved construction documents.

[BF] 1705.17 Fire-resistant penetrations and joints. In *high-rise buildings* or in buildings assigned to *Risk Category* III or IV, *special inspections* for *through-penetrations*, membrane penetration firestops, *fire-resistant joint systems* and perimeter fire barrier systems that are tested and *listed* in accordance with Sections 714.4.1.2, 714.5.1.2, 715.3 and 715.4 shall be in accordance with Section 1705.17.1 or 1705.17.2.

[BF] 1705.17.1 Penetration firestops. Inspections of penetration firestop systems that are tested and *listed* in accordance with Sections 714.4.1.2 and 714.5.1.2 shall be conducted by an *approved agency* in accordance with ASTM E2174.

[BF] 1705.17.2 Fire-resistant joint systems. Inspection of fire-resistant joint systems that are tested and *listed* in accordance with Sections 715.3 and 715.4 shall be conducted by an *approved agency* in accordance with ASTM E2393.

[S][F] 1705.18 Testing for smoke control. Smoke control systems shall be inspected and tested ((~~by a special inspector~~)) according to standards specified by the *building official*.

((~~[F] 1705.18.1 Testing scope.~~ ~~The test scope shall be as follows:~~

1. ~~During erection of ductwork and prior to concealment for the purposes of leakage testing and recording of device location.~~
2. ~~Prior to occupancy and after sufficient completion for the purposes of pressure difference testing, flow measurements and detection and control verification.~~

~~**[F] 1705.18.2 Qualifications.** *Approved agencies* for smoke control testing shall have expertise in fire protection engineering, mechanical engineering and certification as air balancers.~~))

DRAFT

SECTION 1706
DESIGN STRENGTHS OF MATERIALS

1706.1 Conformance to standards. The design strengths and permissible stresses of any structural material that are identified by a manufacturer's designation as to manufacture and grade by mill tests, or the strength and stress grade is otherwise confirmed to the satisfaction of the *building official*, shall conform to the specifications and methods of design of accepted engineering practice or the *approved* rules in the absence of applicable standards.

1706.2 New materials. For materials that are not specifically provided for in this code, the design strengths and permissible stresses shall be established by tests as provided for in Section 1707.

SECTION 1707
ALTERNATIVE TEST PROCEDURE

[S] 1707.1 General. In the absence of *approved* rules or other *approved* standards, the *building official* shall make, or cause to be made, the necessary tests and investigations; or the *building official* shall accept duly authenticated reports from *approved agencies* in respect to the quality and manner of use of new materials or assemblies as provided for in Section ((~~104.11~~)) 104.4 or 104.5. The cost of all tests and other investigations required under the provisions of this code shall be borne by the owner or the owner's authorized agent.

SECTION 1708
IN-SITU LOAD TESTS

1708.1 General. Whenever there is a reasonable doubt as to the stability or load-bearing capacity of a completed building, structure or portion thereof for the expected loads, an engineering assessment shall be required. The engineering assessment shall involve either a structural analysis or an in-situ load test, or both. The structural analysis shall be based on actual material properties and other as-built conditions that affect stability or load-bearing capacity, and shall be conducted in accordance with the applicable design standard. The in-situ load tests shall be conducted in accordance with Section 1708.2. If the building, structure

1709.4 Wall and partition assemblies. *Load-bearing wall* and partition assemblies shall sustain the test load both with and without window framing. The test load shall include all design load components. Wall and partition assemblies shall be tested both with and without door and window framing.

[W] 1709.5 Exterior window and door assemblies. The design pressure rating of exterior windows and doors in buildings shall be determined in accordance with Section 1709.5.1 or 1709.5.2. For exterior windows and doors tested in accordance with Sections 1709.5.1 or 1709.5.2, required design wind pressures determined from ASCE 7 shall be permitted to be converted to allowable stress design by multiplying by 0.6.

Exceptions:

1. Structural wind load design pressures for window units smaller than the size tested in accordance with Section 1709.5.1 or 1709.5.2 shall be permitted to be higher than the design value of the tested unit provided such higher pressures are determined by accepted engineering analysis. Components of the small unit shall be the same as the tested unit. Where such calculated design pressures are used, they shall be validated by an additional test of the window unit having the highest allowable design pressure.

[S] 2. Custom exterior windows and doors manufactured by *small business* are exempt from all testing requirements in Section 1709 if they meet the applicable provisions of Chapter 24.

1709.5.1 Exterior windows and doors. Exterior windows and sliding doors shall be tested and *labeled* as conforming to AAMA/WDMA/CSA101/I.S.2/A440. The *label* shall state the name of the manufacturer, the *approved* labeling agency and the product designation as specified in AAMA/WDMA/CSA101/I.S.2/A440. Exterior side-hinged doors shall be tested and *labeled* as conforming to AAMA/WDMA/CSA101/I.S.2/A440 or comply with Section 1709.5.2. Products tested and *labeled* as conforming to AAMA/WDMA/CSA 101/I.S.2/A440 shall not be subject to the requirements of Sections 2403.2 and 2403.3.

1709.5.2 Exterior windows and door assemblies not provided for in Section 1709.5.1. Exterior window and door assemblies shall be tested in accordance with ASTM E330. Structural performance of garage doors and rolling doors shall be determined in accordance with either ASTM E330 or ANSI/DASMA 108, and shall meet the acceptance criteria of ANSI/DASMA 108. Exterior window and door assemblies containing glass shall comply with Section 2403. The design pressure for testing shall be calculated in accordance with Chapter 16. Each assembly shall be tested for 10 seconds at a load equal to 1.5 times the design pressure.

1709.6 Skylights and sloped glazing. Skylights and sloped glazing shall comply with the requirements of Chapter 24.

1709.7 Test specimens. Test specimens and construction shall be representative of the materials, workmanship and details normally used in practice. The properties of the materials used to construct the test assembly shall be determined on the basis of tests on samples taken from the load assembly or on representative samples of the materials used to construct the load test assembly. Required tests shall be conducted or witnessed by an *approved agency*.

DRAFT

CHAPTER 18

SOILS AND FOUNDATIONS

User notes:

About this chapter: *Chapter 18 provides criteria for geotechnical and structural considerations in the selection, design and installation of foundation systems to support the loads imposed by the structure above. This chapter includes requirements for soils investigation and site preparation for receiving a foundation, including the load-bearing values for soils and protection for the foundation from frost and water intrusion. Section 1808 addresses the basic requirements for all foundation types while subsequent sections address foundation requirements that are specific to shallow foundations and deep foundations.*

Code development reminder: *Code change proposals to this chapter will be considered by the IBC—Structural Code Development Committee during the 2019 (Group B) Code Development Cycle. See explanation on page iv.*

SECTION 1801
GENERAL

1801.1 Scope. The provisions of this chapter shall apply to building and foundation systems.

SECTION 1802
DESIGN BASIS

[S] 1802.1 General. Allowable bearing pressures, allowable stresses and design formulas provided in this chapter shall be used with the *allowable stress design* load combinations specified in Section 1605.3. The quality and design of materials used structurally in excavations and foundations shall comply with the requirements specified in Chapters 16, 19, 21, 22 and 23. Excavations, ((~~and~~)) fills and *land-disturbing activity* shall comply with Chapter 33, the Seattle Stormwater Code (*Seattle Municipal Code* Chapter 22.800), the Seattle Grading Code (*Seattle Municipal Code* Chapter 22.170), and the Regulations for Environmentally Critical Areas (*Seattle Municipal Code* Chapter 25.09) and any rules adopted and conditions imposed under any of them.

SECTION 1803
GEOTECHNICAL INVESTIGATIONS

1803.1 General. Geotechnical investigations shall be conducted in accordance with Section 1803.2 and reported in accordance with Section 1803.6. Where ((~~required by the *building official* or where~~)) geotechnical investigations involve in-situ testing, laboratory testing or engineering calculations, such investigations shall be conducted by a *registered design professional*.

1803.2 Investigations required. Geotechnical investigations shall be conducted in accordance with Sections 1803.3 through 1803.5.

Exception: The *building official* shall be permitted to waive the requirement for a geotechnical investigation where satisfactory data from adjacent areas is available that demonstrates an investigation is not necessary for any of the conditions in Sections 1803.5.1 through 1803.5.6 and Sections 1803.5.10 and 1803.5.11.

1803.3 Basis of investigation. Soil classification shall be based on observation and any necessary tests of the materials disclosed by borings, test pits or other subsurface exploration made in appropriate locations. Additional studies shall be made as necessary to evaluate slope stability, soil strength, position and adequacy of load-bearing soils, the effect of moisture variation on soil-bearing capacity, compressibility, liquefaction and expansiveness.

1803.3.1 Scope of investigation. The scope of the geotechnical investigation including the number and types of borings or soundings, the equipment used to drill or sample, the in-situ testing equipment and the laboratory testing program shall be determined by a *registered design professional*.

1803.4 Qualified representative. The investigation procedure and apparatus shall be in accordance with generally accepted engineering practice. The *registered design professional* shall have a fully qualified representative on site during all boring or sampling operations.

1803.5 Investigated conditions. Geotechnical investigations shall be conducted as indicated in Sections 1803.5.1 through 1803.5.12.

1803.5.1 Classification. Soil materials shall be classified in accordance with ASTM D2487.

DRAFT

1803.5.2 Questionable soil. Where the classification, strength or compressibility of the soil is in doubt or where a load-bearing value superior to that specified in this code is claimed, the *building official* shall be permitted to require that a geotechnical investigation be conducted.

1803.5.3 Expansive soil. In areas likely to have expansive soil, the *building official* shall require soil tests to determine where such soils do exist.

Soils meeting all four of the following provisions shall be considered to be expansive, except that tests to show compliance with Items 1, 2 and 3 shall not be required if the test prescribed in Item 4 is conducted:

1. Plasticity index (PI) of 15 or greater, determined in accordance with ASTM D4318.
2. More than 10 percent of the soil particles pass a No. 200 sieve (75 μm), determined in accordance with ASTM D422.
3. More than 10 percent of the soil particles are less than 5 micrometers in size, determined in accordance with ASTM D422.
4. Expansion index greater than 20, determined in accordance with ASTM D4829.

[S] 1803.5.4 Ground water table. A subsurface soil investigation shall be performed to determine whether the existing static ground water table is above or within 5 feet (1524 mm) below the elevation of the lowest floor level where such floor is located below the finished ground level adjacent to the foundation.

Exception: A subsurface soil investigation to determine the location of the ground water table shall not be required where waterproofing is provided in accordance with Section 1805.

1803.5.5 Deep foundations. Where deep foundations will be used, a geotechnical investigation shall be conducted and shall include all of the following, unless sufficient data on which to base the design and installation is otherwise available:

1. Recommended deep foundation types and installed capacities.
2. Recommended center-to-center spacing of deep foundation elements.
3. Driving criteria.
4. Installation procedures.
5. Field inspection and reporting procedures (to include procedures for verification of the installed bearing capacity where required).
6. Load test requirements.
7. Suitability of deep foundation materials for the intended environment.
8. Designation of bearing stratum or strata.
9. Reductions for group action, where necessary.

[S] 1803.5.6 Rock strata. Where subsurface explorations at the project site indicate variations in the structure of rock on which foundations are to be constructed, the *building official* is permitted to require a sufficient number of borings ((~~shall~~)) to be drilled to sufficient depths to assess the competency of the rock and its load-bearing capacity.

1803.5.7 Excavation near foundations. Where excavation will reduce support from any foundation, a *registered design professional* shall prepare an assessment of the structure as determined from examination of the structure, the review of available design documents and, if necessary, excavation of test pits. The *registered design professional* shall determine the requirements for underpinning and protection and prepare site-specific plans, details and sequence of work for submission. Such support shall be provided by underpinning, sheeting and bracing, or by other means acceptable to the *building official*.

1803.5.8 Compacted fill material. Where shallow foundations will bear on compacted fill material more than 12 inches (305 mm) in depth, a geotechnical investigation shall be conducted and shall include all of the following:

1. Specifications for the preparation of the site prior to placement of compacted fill material.
2. Specifications for material to be used as compacted fill.
3. Test methods to be used to determine the maximum dry density and optimum moisture content of the material to be used as compacted fill.
4. Maximum allowable thickness of each lift of compacted fill material.
5. Field test method for determining the in-place dry density of the compacted fill.
6. Minimum acceptable in-place dry density expressed as a percentage of the maximum dry density determined in accordance with Item 3.
7. Number and frequency of field tests required to determine compliance with Item 6.

1803.5.9 Controlled low-strength material (CLSM). Where shallow foundations will bear on controlled low-strength material (CLSM), a geotechnical investigation shall be conducted and shall include all of the following:

DRAFT

1. Specifications for the preparation of the site prior to placement of the CLSM.
2. Specifications for the CLSM.
3. Laboratory or field test method(s) to be used to determine the compressive strength or bearing capacity of the CLSM.
4. Test methods for determining the acceptance of the CLSM in the field.
5. Number and frequency of field tests required to determine compliance with Item 4.

[S] ((~~1803.5.10 Alternate setback and clearance.~~ ~~Where setbacks or clearances other than those required in Section 1808.7 are desired, the *building official* shall be permitted to require a geotechnical investigation by a *registered design professional* to demonstrate that the intent of Section 1808.7 would be satisfied. Such an investigation shall include consideration of material, height of slope, slope gradient, load intensity and erosion characteristics of slope material.~~))

[S] 1803.5.11 Seismic Design Categories C through F. For structures assigned to *Seismic Design Category* C, D, E or F, and where the structure is located in an area known to be a geologic hazard area as defined in the Regulations for Environmentally Critical Areas (*Seattle Municipal Code* Chapter 25.09), a geotechnical investigation shall be conducted, and shall include an evaluation of all of the following potential geologic and seismic hazards:

1. Slope instability.
2. Liquefaction.
3. Total and differential settlement.
4. Surface displacement due to faulting or seismically induced lateral spreading or lateral flow.

Exception: The *building official* is permitted to waive this evaluation upon receipt of the written opinion of a geotechnical engineer that the building's foundation design adequately addresses liquefaction.

[S] 1803.5.11.1 Slope instability. The potential for slope instability shall be evaluated for the design earthquake ground motion specified in Chapter 16 and Section 11.4.5 of ASCE 7. Peak ground acceleration is also permitted to be determined based on a site-specific study taking into account soil amplification effects. If a pseudostatic stability analysis is performed, the seismic coefficient shall correspond to some fraction of the anticipated peak ground acceleration.

[S] 1803.5.12 Seismic Design Categories D through F. For structures assigned to *Seismic Design Category* D, E or F, and where the structure is located in an area known to be a geologic hazard area as defined in the Regulations for Environmentally Critical Areas (*Seattle Municipal Code* Chapter 25.09), or where basement or retaining walls in geologic hazard areas exceed 12 feet (3658 mm) in height, the geotechnical investigation required by Section 1803.5.11 shall include all of the following as applicable:

1. The determination of dynamic seismic lateral earth pressures on foundation walls and retaining walls supporting more than 6 feet (1.83 m) of backfill height due to design earthquake ground motions.
2. The potential for liquefaction and soil strength loss evaluated for site peak ground acceleration, earthquake magnitude and source characteristics consistent with the maximum considered earthquake ground motions. Peak ground acceleration shall be determined based on one of the following:
   - 2.1. A site-specific study in accordance with Chapter 21 of ASCE 7.
   - 2.2. In accordance with Section 11.8.3 of ASCE 7.
3. An assessment of potential consequences of liquefaction and soil strength loss including, but not limited to, the following:
   - 3.1. Estimation of total and differential settlement.
   - 3.2. Lateral soil movement.
   - 3.3. Lateral soil loads on foundations.
   - 3.4. Reduction in foundation soil-bearing capacity and lateral soil reaction.
   - 3.5. Soil downdrag and reduction in axial and lateral soil reaction for pile foundations.
   - 3.6. Increases in soil lateral pressures on retaining walls.
   - 3.7. Flotation of buried structures.
4. Discussion of mitigation measures such as, but not limited to, the following:
   - 4.1. Selection of appropriate foundation type and depths.
   - 4.2. Selection of appropriate structural systems to accommodate anticipated displacements and forces.
   - 4.3. Ground stabilization.
   - 4.4. Any combination of these measures and how they shall be considered in the design of the structure.

DRAFT

[S] 1803.6 Reporting. Where geotechnical investigations are required, a written report of the investigations shall be submitted to the *building official* by the permit applicant at the time of permit application. This geotechnical report shall include, but need not be limited to, the following information:

1. A plot showing the location of the soil investigations.
2. A complete record of the soil boring and penetration test logs and soil samples.
3. A record of the soil profile.
4. Elevation of the water table, if encountered.
5. Recommendations for foundation type and design criteria, including but not limited to: bearing capacity of natural or compacted soil; provisions to mitigate the effects of expansive soils; mitigation of the effects of liquefaction, differential settlement and varying soil strength; mitigation of the effects of slope instability; and the effects of adjacent loads.
6. Expected total and differential settlement.
7. Deep foundation information in accordance with Section 1803.5.5.
8. Special design and construction provisions for foundations of structures founded on expansive soils, as necessary.
9. Compacted fill material properties and testing in accordance with Section 1803.5.8.
10. Controlled low-strength material properties and testing in accordance with Section 1803.5.9.

SECTION 1804
EXCAVATION, GRADING AND FILL

1804.1 Excavation near foundations. Excavation for any purpose shall not reduce vertical or lateral support for any foundation or adjacent foundation without first underpinning or protecting the foundation against detrimental lateral or vertical movement, or both.

1804.2 Underpinning. Where underpinning is chosen to provide the protection or support of adjacent structures, the underpinning system shall be designed and installed in accordance with provisions of this chapter and Chapter 33.

1804.2.1 Underpinning sequencing. Underpinning shall be installed in a sequential manner that protects the neighboring structure and the working construction site. The sequence of installation shall be identified in the *approved construction documents.*

1804.3 Placement of backfill. The excavation outside the foundation shall be backfilled with soil that is free of organic material, construction debris, cobbles and boulders or with a controlled low-strength material (CLSM). The backfill shall be placed in lifts and compacted in a manner that does not damage the foundation or the waterproofing or dampproofing material.

Exception: CLSM need not be compacted.

1804.4 Site grading. The ground immediately adjacent to the foundation shall be sloped away from the building at a slope of not less than one unit vertical in 20 units horizontal (5-percent slope) for a minimum distance of 10 feet (3048 mm) measured perpendicular to the face of the wall. If physical obstructions or lot lines prohibit 10 feet (3048 mm) of horizontal distance, a 5-percent slope shall be provided to an *approved* alternative method of diverting water away from the foundation. Swales used for this purpose shall be sloped not less than 2 percent where located within 10 feet (3048 mm) of the building foundation. Impervious surfaces within 10 feet (3048 mm) of the building foundation shall be sloped not less than 2 percent away from the building.

Exceptions:

1. Where climatic or soil conditions warrant, the slope of the ground away from the building foundation shall be permitted to be reduced to not less than one unit vertical in 48 units horizontal (2-percent slope).
2. Impervious surfaces shall be permitted to be sloped less than 2 percent where the surface is a door landing or ramp that is required to comply with Section 1010.1.5, 1012.3 or 1012.6.1.

The procedure used to establish the final ground level adjacent to the foundation shall account for additional settlement of the backfill.

1804.5 Grading and fill in flood hazard areas. In *flood hazard areas* established in Section 1612.3, grading, fill, or both, shall not be *approved*:

1. Unless such fill is placed, compacted and sloped to minimize shifting, slumping and erosion during the rise and fall of floodwater and, as applicable, wave action.
2. In floodways, unless it has been demonstrated through hydrologic and hydraulic analyses performed by a *registered design professional* in accordance with standard engineering practice that the proposed grading or fill, or both, will not result in any increase in flood levels during the occurrence of the *design flood.*

DRAFT

1805.2.2.1 Surface preparation of walls. Prior to application of dampproofing materials on concrete walls, holes and recesses resulting from the removal of form ties shall be sealed with a bituminous material or other *approved* methods or materials. Unit masonry walls shall be parged on the exterior surface below ground level with not less than 3/8 inch (9.5 mm) of Portland cement mortar. The parging shall be coved at the footing.

Exception: Parging of unit masonry walls is not required where a material is *approved* for direct application to the masonry.

1805.3 Waterproofing. Where the ground water investigation required by Section 1803.5.4 indicates that a hydrostatic pressure condition exists, and the design does not include a ground water control system as described in Section 1805.1.3, walls and floors shall be waterproofed in accordance with this section.

1805.3.1 Floors. Floors required to be waterproofed shall be of concrete and designed and constructed to withstand the hydrostatic pressures to which the floors will be subjected.

Waterproofing shall be accomplished by placing a membrane of rubberized asphalt, butyl rubber, fully adhered/fully bonded HDPE or polyolefin composite membrane or not less than 6-mil [0.006 inch (0.152 mm)] polyvinyl chloride with joints lapped not less than 6 inches (152 mm) or other *approved* materials under the slab. Joints in the membrane shall be lapped and sealed in accordance with the manufacturer's installation instructions.

1805.3.2 Walls. Walls required to be waterproofed shall be of concrete or masonry and shall be designed and constructed to withstand the hydrostatic pressures and other lateral loads to which the walls will be subjected.

Waterproofing shall be applied from the bottom of the wall to not less than 12 inches (305 mm) above the maximum elevation of the ground water table. The remainder of the wall shall be dampproofed in accordance with Section 1805.2.2. Waterproofing shall consist of two-ply hot-mopped felts, not less than 6-mil (0.006 inch; 0.152 mm) polyvinyl chloride, 40-mil (0.040 inch; 1.02 mm) polymer-modified asphalt, 6-mil (0.006 inch; 0.152 mm) polyethylene or other *approved* methods or materials capable of bridging nonstructural cracks. Joints in the membrane shall be lapped and sealed in accordance with the manufacturer's installation instructions.

1805.3.2.1 Surface preparation of walls. Prior to the application of waterproofing materials on concrete or masonry walls, the walls shall be prepared in accordance with Section 1805.2.2.1.

1805.3.3 Joints and penetrations. Joints in walls and floors, joints between the wall and floor and penetrations of the wall and floor shall be made watertight utilizing *approved* methods and materials.

1805.4 Subsoil drainage system. Where a hydrostatic pressure condition does not exist, dampproofing shall be provided and a base shall be installed under the floor and a drain installed around the foundation perimeter. A subsoil drainage system designed and constructed in accordance with Section 1805.1.3 shall be deemed adequate for lowering the ground-water table.

1805.4.1 Floor base course. Floors of basements, except as provided for in Section 1805.1.1, shall be placed over a floor base course not less than 4 inches (102 mm) in thickness that consists of gravel or crushed stone containing not more than 10 percent of material that passes through a No. 4 (4.75 mm) sieve.

Exception: Where a site is located in well-drained gravel or sand/gravel mixture soils, a floor base course is not required.

1805.4.2 Foundation drain. A drain shall be placed around the perimeter of a foundation that consists of gravel or crushed stone containing not more than 10-percent material that passes through a No. 4 (4.75 mm) sieve. The drain shall extend not less than 12 inches (305 mm) beyond the outside edge of the footing. The thickness shall be such that the bottom of the drain is not higher than the bottom of the base under the floor, and that the top of the drain is not less than 6 inches (152 mm) above the top of the footing. The top of the drain shall be covered with an *approved* filter membrane material. Where a drain tile or perforated pipe is used, the invert of the pipe or tile shall not be higher than the floor elevation. The top of joints or the top of perforations shall be protected with an *approved* filter membrane material. The pipe or tile shall be placed on not less than 2 inches (51 mm) of gravel or crushed stone complying with Section 1805.4.1, and shall be covered with not less than 6 inches (152 mm) of the same material.

[S] 1805.4.3 Drainage discharge. The floor base and foundation perimeter drain shall discharge by gravity or mechanical means into an *approved* drainage system that complies with the *International Plumbing Code*.

((~~Exception:~~ ~~Where a site is located in well-drained gravel or sand/gravel mixture soils, a dedicated drainage system is not required.~~))

SECTION 1806
PRESUMPTIVE LOAD-BEARING VALUES OF SOILS

1806.1 Load combinations. The presumptive load-bearing values provided in Table 1806.2 shall be used with the *allowable stress design* load combinations specified in Section 1605.3. The values of vertical foundation pressure and lateral bearing pressure given in Table 1806.2 shall be permitted to be increased by one-third where used with the alternative basic load combinations of Section 1605.3.2 that include wind or earthquake loads.

DRAFT

(1829 mm) of backfill height measured to the bottom of the footing shall incorporate the additional seismic lateral earth pressure in accordance with the geotechnical investigation where required in Section 1803.2.

1807.2.3 Safety factor. Retaining walls shall be designed to resist the lateral action of soil to produce sliding and overturning with a minimum safety factor of 1.5 in each case. The load combinations of Section 1605 shall not apply to this requirement. Instead, design shall be based on 0.7 times nominal earthquake loads, 1.0 times other *nominal loads*, and investigation with one or more of the variable loads set to zero. The safety factor against lateral sliding shall be taken as the available soil resistance at the base of the retaining wall foundation divided by the net lateral force applied to the retaining wall.

Exception: Where earthquake loads are included, the minimum safety factor for retaining wall sliding and overturning shall be 1.1.

1807.3 Embedded posts and poles. Designs to resist both axial and lateral loads employing posts or poles as columns embedded in earth or in concrete footings in earth shall be in accordance with Sections 1807.3.1 through 1807.3.3.

1807.3.1 Limitations. The design procedures outlined in this section are subject to the following limitations:

1. The frictional resistance for structural walls and slabs on silts and clays shall be limited to one-half of the normal force imposed on the soil by the weight of the footing or slab.
2. Posts embedded in earth shall not be used to provide lateral support for structural or nonstructural materials such as plaster, masonry or concrete unless bracing is provided that develops the limited deflection required.

Wood poles shall be treated in accordance with AWPA U1 for sawn timber posts (Commodity Specification A, Use Category 4B) and for round timber posts (Commodity Specification B, Use Category 4B).

1807.3.2 Design criteria. The depth to resist lateral loads shall be determined using the design criteria established in Sections 1807.3.2.1 through 1807.3.2.3, or by other methods *approved* by the *building official*.

1807.3.2.1 Nonconstrained. The following formula shall be used in determining the depth of embedment required to resist lateral loads where lateral constraint is not provided at the ground surface, such as by a rigid floor or rigid ground surface pavement, and where lateral constraint is not provided above the ground surface, such as by a structural diaphragm.

$d = 0.5A\{1 + [1 + (4.36h/A)]1/2\}$ **(Equation 18-1)**

where:

A = $2.34P/(S_1b)$.

b = Diameter of round post or footing or diagonal dimension of square post or footing, feet (m).

d = Depth of embedment in earth in feet (m) but not over 12 feet (3658 mm) for purpose of computing lateral pressure.

h = Distance in feet (m) from ground surface to point of application of "P."

P = Applied lateral force in pounds (kN).

S_1 = Allowable lateral soil-bearing pressure as set forth in Section 1806.2 based on a depth of one-third the depth of embedment in pounds per square foot (psf) (kPa).

1807.3.2.2 Constrained. The following formula shall be used to determine the depth of embedment required to resist lateral loads where lateral constraint is provided at the ground surface, such as by a rigid floor or pavement.

$$d = \sqrt{\frac{4.25Ph}{S_3b}}$$ **(Equation 18-2)**

or alternatively

$$d = \sqrt{\frac{4.25M_g}{S_3b}}$$ **(Equation 18-3)**

where:

M_g = Moment in the post at grade, in foot-pounds (kN-m).

S_3 = Allowable lateral soil-bearing pressure as set forth in Section 1806.2 based on a depth equal to the depth of embedment in pounds per square foot (kPa).

1807.3.2.3 Vertical load. The resistance to vertical loads shall be determined using the vertical foundation pressure set forth in Table 1806.2.

1807.3.3 Backfill. The backfill in the annular space around columns not embedded in poured footings shall be by one of the following methods:

DRAFT

tions. Such alternative methods shall be rational and the basis for all aspects and parameters of the method shall be available for peer review.

1808.6.3 Removal of expansive soil. Where expansive soil is removed in lieu of designing foundations in accordance with Section 1808.6.1 or 1808.6.2, the soil shall be removed to a depth sufficient to ensure a constant moisture content in the remaining soil. Fill material shall not contain expansive soils and shall comply with Section 1804.5 or 1804.6.

Exception: Expansive soil need not be removed to the depth of constant moisture, provided that the confining pressure in the expansive soil created by the fill and supported structure exceeds the swell pressure.

1808.6.4 Stabilization. Where the active zone of expansive soils is stabilized in lieu of designing foundations in accordance with Section 1808.6.1 or 1808.6.2, the soil shall be stabilized by chemical, dewatering, presaturation or equivalent techniques.

[S] 1808.7 ((~~Foundations on or adjacent to slopes~~)) Reserved. ((~~The placement of buildings and structures on or adjacent to slopes steeper than one unit vertical in three units horizontal (33.3 percent slope) shall comply with Sections 1808.7.1 through 1808.7.5.~~

~~**1808.7.1 Building clearance from ascending slopes.** In general, buildings below slopes shall be set a sufficient distance from the slope to provide protection from slope drainage, erosion and shallow failures. Except as provided in Section 1808.7.5 and Figure 1808.7.1, the following criteria will be assumed to provide this protection. Where the existing slope is steeper than one unit vertical in one unit horizontal (100 percent slope), the toe of the slope shall be assumed to be at the intersection of a horizontal plane drawn from the top of the foundation and a plane drawn tangent to the slope at an angle of 45 degrees (0.79 rad) to the horizontal. Where a retaining wall is constructed at the toe of the slope, the height of the slope shall be measured from the top of the wall to the top of the slope.~~

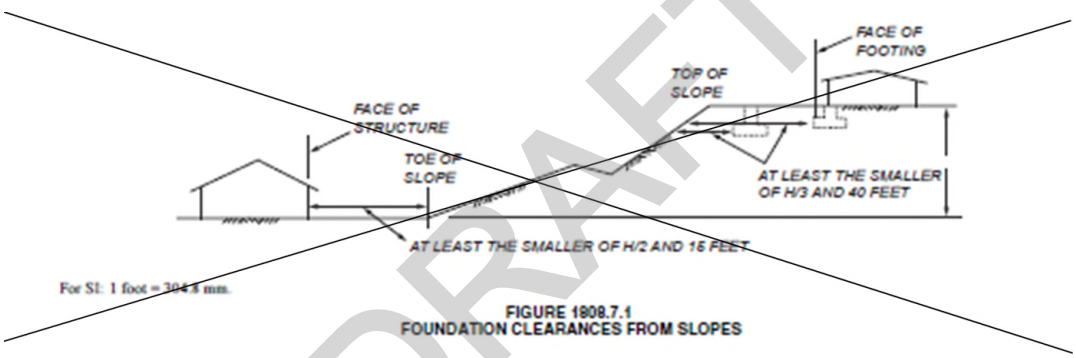

FIGURE 1808.7.1
FOUNDATION CLEARANCES FROM SLOPES

DRAFT

~~**1808.7.2 Foundation setback from descending slope surface.** Foundations on or adjacent to slope surfaces shall be founded in firm material with an embedment and set back from the slope surface sufficient to provide vertical and lateral support for the foundation without detrimental settlement. Except as provided for in Section 1808.7.5 and Figure 1808.7.1, the following setback is deemed adequate to meet the criteria. Where the slope is steeper than 1 unit vertical in 1 unit horizontal (100 percent slope), the required setback shall be measured from an imaginary plane 45 degrees (0.79 rad) to the horizontal, projected upward from the toe of the slope.~~

~~**1808.7.3 Pools.** The setback between pools regulated by this code and slopes shall be equal to one-half the building footing setback distance required by this section. That portion of the pool wall within a horizontal distance of 7 feet (2134 mm) from the top of the slope shall be capable of supporting the water in the pool without soil support.~~

~~**1808.7.4 Foundation elevation.** On graded sites, the top of any exterior foundation shall extend above the elevation of the street gutter at point of discharge or the inlet of an *approved* drainage device not less than 12 inches (305 mm) plus 2 percent. Alternate elevations are permitted subject to the approval of the *building official*, provided that it can be demonstrated that required drainage to the point of discharge and away from the structure is provided at all locations on the site.~~

~~**1808.7.5 Alternate setback and clearance.** Alternate setbacks and clearances are permitted, subject to the approval of the *building official*. The *building official* shall be permitted to require a geotechnical investigation as set forth in Section 1803.5.10.~~))

1808.8 Concrete foundations. The design, materials and construction of concrete foundations shall comply with Sections 1808.8.1 through 1808.8.6 and the provisions of Chapter 19.

Exception: Where concrete footings supporting walls of light-frame construction are designed in accordance with Table 1809.7, a specific design in accordance with Chapter 19 is not required.

1808.8.1 Concrete or grout strength and mix proportioning. Concrete or grout in foundations shall have a specified compressive strength (f'_c) not less than the largest applicable value indicated in Table 1808.8.1.

1810.3.9.5 Belled drilled shafts. Where drilled shafts are belled at the bottom, the edge thickness of the bell shall be not less than that required for the edge of footings. Where the sides of the bell slope at an angle less than 60 degrees (1 rad) from the horizontal, the effects of vertical shear shall be considered.

1810.3.9.6 Socketed drilled shafts. Socketed drilled shafts shall have a permanent pipe or tube casing that extends down to bedrock and an uncased socket drilled into the bedrock, both filled with concrete. Socketed drilled shafts shall have reinforcement or a structural steel core for the length as indicated by an *approved* method of analysis.

The depth of the rock socket shall be sufficient to develop the full load-bearing capacity of the element with a minimum safety factor of two, but the depth shall be not less than the outside diameter of the pipe or tube casing. The design of the rock socket is permitted to be predicated on the sum of the allowable load-bearing pressure on the bottom of the socket plus bond along the sides of the socket.

Where a structural steel core is used, the gross cross-sectional area of the core shall not exceed 25 percent of the gross area of the drilled shaft.

1810.3.10 Micropiles. Micropiles shall be designed and detailed in accordance with Sections 1810.3.10.1 through 1810.3.10.4.

1810.3.10.1 Construction. Micropiles shall develop their load-carrying capacity by means of a bond zone in soil, bedrock or a combination of soil and bedrock. Micropiles shall be grouted and have either a steel pipe or tube or steel reinforcement at every section along the length. It shall be permitted to transition from deformed reinforcing bars to steel pipe or tube reinforcement by extending the bars into the pipe or tube section by not less than their development length in tension in accordance with ACI 318.

1810.3.10.2 Materials. Reinforcement shall consist of deformed reinforcing bars in accordance with ASTM A615 Grade 60 or 75 or ASTM A722 Grade 150.

The steel pipe or tube shall have a minimum wall thickness of 3/16 inch (4.8 mm). Splices shall comply with Section 1810.3.6. The steel pipe or tube shall have a minimum yield strength of 45,000 psi (310 MPa) and a minimum elongation of 15 percent as shown by mill certifications or two coupon test samples per 40,000 pounds (18 160 kg) of pipe or tube.

1810.3.10.3 Reinforcement. For micropiles or portions thereof grouted inside a temporary or permanent casing or inside a hole drilled into bedrock or a hole drilled with grout, the steel pipe or tube or steel reinforcement shall be designed to carry not less than 40 percent of the design compression load. Micropiles or portions thereof grouted in an open hole in soil without temporary or permanent casing and without suitable means of verifying the hole diameter during grouting shall be designed to carry the entire compression load in the reinforcing steel. Where a steel pipe or tube is used for reinforcement, the portion of the grout enclosed within the pipe is permitted to be included in the determination of the allowable stress in the grout.

[S] 1810.3.10.4 Seismic reinforcement. For structures assigned to *Seismic Design Category* C, a permanent steel casing shall be provided from the top of the micropile down to the point of zero curvature. For structures assigned to *Seismic Design Category* D, E or F, the micropile shall be considered as an alternative system in accordance with Section ((~~104.11~~)) 104.5. The alternative system design, supporting documentation and test data shall be submitted to the *building official* for review and approval.

1810.3.11 Pile caps. Pile caps shall be of reinforced concrete, and shall include all elements to which vertical deep foundation elements are connected, including grade beams and mats. The soil immediately below the pile cap shall not be considered as carrying any vertical load, with the exception of a combined pile raft. The tops of vertical deep foundation elements shall be embedded not less than 3 inches (76 mm) into pile caps and the caps shall extend not less than 4 inches (102 mm) beyond the edges of the elements. The tops of elements shall be cut or chipped back to sound material before capping.

1810.3.11.1 Seismic Design Categories C through F. For structures assigned to *Seismic Design Category* C, D, E or F, concrete deep foundation elements shall be connected to the pile cap by embedding the element reinforcement or field-placed dowels anchored in the element into the pile cap for a distance equal to their development length in accordance with ACI 318. It shall be permitted to connect precast prestressed piles to the pile cap by developing the element prestressing strands into the pile cap provided that the connection is ductile. For deformed bars, the development length is the full development length for compression, or tension in the case of uplift, without reduction for excess reinforcement in accordance with Section 25.4.10 of ACI 318. Alternative measures for laterally confining concrete and maintaining toughness and ductile-like behavior at the top of the element shall be permitted provided that the design is such that any hinging occurs in the confined region.

The minimum transverse steel ratio for confinement shall be not less than one-half of that required for columns.

For resistance to uplift forces, anchorage of steel pipes, tubes or H-piles to the pile cap shall be made by means other than concrete bond to the bare steel section. Concrete-filled steel pipes or tubes shall have reinforcement of not less than 0.01 times the cross-sectional area of the concrete fill developed into the cap and extending into the fill a length equal to two times the required cap embedment, but not less than the development length in tension of the reinforcement.

DRAFT

4. Subsequent micropiles shall not be drilled near elements that have been grouted until the grout has had sufficient time to harden.
5. Micropiles shall be grouted as soon as possible after drilling is completed.
6. For micropiles designed with a full-length casing, the casing shall be pulled back to the top of the bond zone and reinserted or some other suitable means employed to ensure grout coverage outside the casing.

1810.4.11 Helical piles. Helical piles shall be installed to specified embedment depth and torsional resistance criteria as determined by a *registered design professional*. The torque applied during installation shall not exceed the maximum allowable installation torque of the helical pile.

1810.4.12 Special inspection. *Special inspections* in accordance with Sections 1705.7 and 1705.8 shall be provided for driven and cast-in-place deep foundation elements, respectively. *Special inspections* in accordance with Section 1705.9 shall be provided for helical piles.

[S] SECTION 1811
METHANE REDUCTION MEASURES

[S] 1811.1 Applicability. This section applies to all construction activities on or within 1,000 feet (305 m) of an active, closed or abandoned landfill (landfill zone) that has been identified by the *building official* to be generating levels of methane gas on-site at the lower explosive limits or greater levels. The distance shall be calculated from the location of the proposed structure to the nearest property line of the active or former landfill site. The *building official* is permitted to waive these requirements if technical studies demonstrate that dangerous amounts of methane are not present on the location of the proposed structure.

[S] 1811.2 Protection of Structures. All enclosed structures to be built within the 1,000 foot (305 m) landfill zone shall be protected from potential methane migration. The method for protecting a structure from methane shall be identified in a report prepared by a licensed civil engineer and submitted by the applicant to the *building official* for approval. The report shall contain a description of the investigation and recommendations for preventing the accumulation of explosive concentrations of methane gas within or under enclosed portions of the building or structure. At the time of final inspection, the civil engineer shall furnish a signed statement attesting that, to the best of the engineer's knowledge, the building or structure has been constructed in accordance with the recommendations for addressing methane gas migration.

DRAFT

SECTION 1903
SPECIFICATIONS FOR TESTS AND MATERIALS

1903.1 General. Materials used to produce concrete, concrete itself and testing thereof shall comply with the applicable standards listed in ACI 318.

Exception: *The following standards as referenced in Chapter 35 shall be permitted to be used.*

1. *ASTM C150*
2. *ASTM C595*
3. *ASTM C1157*

1903.2 Special inspections. *Where required, special inspections and tests shall be in accordance with Chapter 17.*

1903.3 Glass fiber-reinforced concrete. *Glass fiber-reinforced concrete (GFRC) and the materials used in such concrete shall be in accordance with the PCI MNL 128 standard.*

1903.4 Flat wall insulating concrete form (ICF) systems. *Insulating concrete form material used for forming flat concrete walls shall conform to ASTM E2634.*

SECTION 1904
DURABILITY REQUIREMENTS

1904.1 Structural concrete. Structural concrete shall conform to the durability requirements of ACI 318.

Exception: *For Group R-2 and R-3 occupancies not more than three stories above grade plane, the specified compressive strength, f'_c, for concrete in basement walls, foundation walls, exterior walls and other vertical surfaces exposed to the weather shall be not less than 3,000 psi (20.7 MPa).*

[S] 1904.2 Nonstructural concrete. *The registered design professional shall assign nonstructural concrete a freeze-thaw exposure class, as defined in ACI 318, based on the anticipated exposure of nonstructural concrete. Nonstructural concrete shall have a minimum specified compressive strength, f'_c, of 2,500 psi (17.2 MPa) for Class F0; 3,000 psi (20.7 MPa) for Class F1; and 3,500 psi (24.1 MPa) for Classes F2 and F3. Nonstructural concrete shall be air entrained in accordance with ACI 318.*

Code Alternate CA1904.2: Five-sack 2000 psi (13.8 MPa) and five 1/2-sack 2500 psi (17.2 MPa) concrete mixes shall be deemed to comply with the requirements for 3000 psi (20.7 MPa) concrete in Sections 1904.1 and 1904.2. Air-entrainment is not required for durability purposes. Mixes shall be proportioned to produce a 5-inch or less slump, with a maximum allowable tolerance of 1-inch plus.

DRAFT

SECTION 1905
MODIFICATIONS TO ACI 318

[S] 1905.1 General. The text of ACI 318 shall be modified as indicated in Sections 1905.1.1 through ((~~1905.1.8~~)) 1905.1.10.

1905.1.1 ACI 318, Section 2.3. Modify existing definitions and add the following definitions to ACI 318, Section 2.3.

DESIGN DISPLACEMENT. Total lateral displacement expected for the design-basis earthquake, *as specified by Section 12.8.6 of ASCE 7.*

DETAILED PLAIN CONCRETE STRUCTURAL WALL. A wall complying with the requirements of Chapter 14, including 14.6.2.

ORDINARY PRECAST STRUCTURAL WALL. A precast wall complying with the requirements of Chapters 1 through 13, 15, 16 and 19 through 26.

ORDINARY REINFORCED CONCRETE STRUCTURAL WALL. A *cast-in-place* wall complying with the requirements of Chapters 1 through 13, 15, 16 and 19 through 26.

ORDINARY STRUCTURAL PLAIN CONCRETE WALL. A wall complying with the requirements of Chapter 14, *excluding 14.6.2.*

SPECIAL STRUCTURAL WALL. A cast-in-place or precast wall complying with the requirements of 18.2.4 through 18.2.8, 18.10 and 18.11, as applicable, in addition to the requirements for ordinary reinforced concrete structural walls *or ordinary precast structural walls, as applicable. Where ASCE 7 refers to a "special reinforced concrete structural wall," it shall be deemed to mean a "special structural wall."*

1905.1.2 ACI 318, Section 18.2.1. Modify ACI 318 Sections 18.2.1.2 and 18.2.1.6 to read as follows:

18.2.1.2 – Structures assigned to Seismic Design Category A shall satisfy requirements of Chapters 1 through 17 and 19 through 26*; Chapter 18 does not apply.* Structures assigned to *Seismic Design Category* B, C, D, E or F shall satisfy

2.3. Anchors are located a minimum of 1-3/4 inches (45 mm) from the edge of the concrete parallel to the length of the track.

2.4. Anchors are located a minimum of 15 anchor diameters from the edge of the concrete perpendicular to the length of the track.

2.5. The track is 33 to 68 mil (0.84 mm to 1.73 mm) designation thickness.

Allowable in-plane shear strength of exempt anchors, parallel to the edge of concrete, shall be permitted to be determined in accordance with AISI S100 Section E3.3.1.

3. In light-frame construction bearing or nonbearing walls, shear strength of concrete anchors less than or equal to 1 inch [25 mm] in diameter attaching sill plate or track to foundation or foundation stem wall need not satisfy 17.2.3.5.3(a) through (c) when the design strength of the anchors is determined in accordance with 17.5.2.1(c).

[S] 1905.1.9 ACI 318, Section 19.2.1.2. Modify ACI 318, Section 19.2.1.2, to read as follows:

19.2.1.2 The specified compressive strength shall be used for proportioning of concrete mixtures in Section 26.4.3 and for testing and acceptance of concrete in Section 26.12.3.

Exception: Concrete is permitted to be designed and constructed in accordance with Section 1905.1.10.

[S] 1905.1.10 ACI 318, Section 26.4.3. Modify ACI 318, Section 26.4.3 by adding new Section 26.4.3.2 as follows:

Concrete proportioning in accordance with Table 1905.1.10 is permitted to be used for concrete to be made with cements meeting strength requirements for Type I, II, or III of ASTM C 150. Table 1905.1.10 shall not be used to proportion concrete containing lightweight aggregates. If approved by the building official, Table 1905.1.10 is permitted to be used with air-entraining admixtures (conforming to ASTM C260) and/or normal-range water-reducing admixtures (conforming to ASTM C494-11 Standard Specification for Chemical Admixtures for Concrete, Types A, D or E; or C618-12 Standard Specification for Coal Fly Ash and Raw or Calcined Natural Pozzolan for Use in Concrete). For strengths greater than 4000 psi (27.7 MPa), proportions shall be established on the basis of field experience and trial mixtures according to ACI Section 26.4.3.1(b) or by proportioning without field mixtures or trial mixtures according to ACI Section 26.4.4.1(b). When approved by the building official, concrete proportions shall be determined in accordance with the provisions of ACI 318, Section 26.4.3.1(b) or 26.4.4.1(b).

[S] TABLE 1905.1.10
MINIMUM PERMISSIBLE CEMENT CONTENT FOR CONCRETE
(Strength Data from Trial Batches or Field Experience are not Available)

SPECIFIED 28-DAY COMPRESSIVE STRENGTH IN psi (f'_{cc})	MINIMUM PERMISSIBLE CEMENT CONTENT IN lb/cu yd	MINIMUM PERMISSIBLE CEMENT CONTENT IN STD. 94-lb SACKS/cu yd
2000	423	4 1/2[1]
2500	470	5[1]
3000	517	5 1/2
4000[2]	611	6 1/2

1. Where special inspection is not required under Section 1705, the minimum permissible cement content shall be increased by 1/2 sack per cubic yard of concrete.
2. For strengths above 4000 psi, see Section 1905.1.10.

SECTION 1906
STRUCTURAL PLAIN CONCRETE

1906.1 Scope. The design and construction of structural plain concrete, both cast-in-place and precast, shall comply with the minimum requirements of ACI 318, as modified in Section 1905.

Exception: For Group R-3 occupancies and buildings of other occupancies less than two stories above grade plane of light-frame construction, the required footing thickness of ACI 318 is permitted to be reduced to 6 inches (152 mm), provided that the footing does not extend more than 4 inches (102 mm) on either side of the supported wall.

SECTION 1907
MINIMUM SLAB PROVISIONS

1907.1 General. The thickness of concrete floor slabs supported directly on the ground shall be not less than 3-1/2 inches (89 mm). A 6-mil (0.006 inch; 0.15 mm) polyethylene vapor retarder with joints lapped not less than 6 inches (152 mm) shall be placed between the base course or subgrade and the concrete floor slab, or other *approved* equivalent methods or materials shall be used to retard vapor transmission through the floor slab.

DRAFT

the chimney. Straps shall be hooked around the outer bars and extend 6 inches (152 mm) beyond the bend. Each strap shall be fastened to not fewer than four floor joists with two 1/2-inch (12.7 mm) bolts.

Exception: Seismic anchorage is not required for the following:

1. In structures assigned to *Seismic Design Category* A or B.
2. Where the masonry fireplace is constructed completely within the exterior walls.

2111.6 Firebox walls. Masonry fireboxes shall be constructed of solid masonry units, hollow masonry units grouted solid, stone or concrete. Where a lining of firebrick not less than 2 inches (51 mm) in thickness or other *approved* lining is provided, the minimum thickness of back and sidewalls shall each be 8 inches (203 mm) of solid masonry, including the lining. The width of joints between firebricks shall be not greater than 1/4 inch (6.4 mm). Where a lining is not provided, the total minimum thickness of back and sidewalls shall be 10 inches (254 mm) of solid masonry. Firebrick shall conform to ASTM C27 or ASTM C1261 and shall be laid with medium-duty refractory mortar conforming to ASTM C199.

2111.6.1 Steel fireplace units. Steel fireplace units are permitted to be installed with solid masonry to form a masonry fireplace provided that they are installed according to either the requirements of their listing or the requirements of this section. Steel fireplace units incorporating a steel firebox lining shall be constructed with steel not less than 1/4 inch (6.4 mm) in thickness, and an air-circulating chamber that is ducted to the interior of the building. The firebox lining shall be encased with solid masonry to provide a total thickness at the back and sides of not less than 8 inches (203 mm), of which not less than 4 inches (102 mm) shall be of solid masonry or concrete. Circulating air ducts employed with steel fireplace units shall be constructed of metal or masonry.

2111.7 Firebox dimensions. The firebox of a concrete or masonry fireplace shall have a minimum depth of 20 inches (508 mm). The throat shall be not less than 8 inches (203 mm) above the fireplace opening. The throat opening shall be not less than 4 inches (102 mm) in depth. The cross-sectional area of the passageway above the firebox, including the throat, damper and smoke chamber, shall be not less than the cross-sectional area of the flue.

Exception: Rumford fireplaces shall be permitted provided that the depth of the fireplace is not less than 12 inches (305 mm) and not less than one-third of the width of the fireplace opening, and the throat is not less than 12 inches (305 mm) above the lintel, and not less than 1/20 the cross-sectional area of the fireplace opening.

[W] 2111.8 Fireplaces. Fireplaces shall be provided with each of the following:

1. Tightly fitting flue dampers, operated by a readily accessible manual or *approved* automatic control.

   Exception: Fireplaces with gas logs shall be installed in accordance with *International Mechanical Code* Section 901, except that the standards for liquefied petroleum gas installations shall be NFPA 58 (*Liquefied Petroleum Gas Code*) and NFPA 54 (*National Fuel Gas Code*).

2. An outside source for combustion air ducted into the firebox. The duct shall be at least 6 square inches and shall be provided with an operable outside air duct damper.

   Exception: Washington certified fireplaces shall be installed with the combustion air systems necessary for their safe and efficient combustion and specified by the manufacturer in accordance with Section 2115.

3. Site built fireplaces shall have tight fitting glass or metal doors, or a flue draft induction fan or as *approved* for minimizing back-drafting. Factory built fireplaces shall use doors listed for the installed appliance.

2111.8.1 Lintel and throat. Masonry over a fireplace opening shall be supported by a lintel of noncombustible material. The minimum required bearing length on each end of the fireplace opening shall be 4 inches (102 mm). The fireplace throat or damper shall be located not less than 8 inches (203 mm) above the top of the fireplace opening.

((~~2111.8.1~~)) 2111.8.2 Damper. Masonry fireplaces shall be equipped with a ferrous metal damper located not less than 8 inches (203 mm) above the top of the fireplace opening. Dampers shall be installed in the fireplace or at the top of the flue venting the fireplace, and shall be operable from the room containing the fireplace. Damper controls shall be permitted to be located in the fireplace.

2111.9 Smoke chamber walls. Smoke chamber walls shall be constructed of solid masonry units, hollow masonry units grouted solid, stone or concrete. The total minimum thickness of front, back and sidewalls shall be 8 inches (203 mm) of solid masonry. The inside surface shall be parged smooth with refractory mortar conforming to ASTM C199. Where a lining of firebrick not less than 2 inches (51 mm) thick, or a lining of vitrified clay not less than 5/8 inch (15.9 mm) thick, is provided, the total minimum thickness of front, back and sidewalls shall be 6 inches (152 mm) of solid masonry, including the lining. Firebrick shall conform to ASTM C1261 and shall be laid with refractory mortar conforming to ASTM C199. Vitrified clay linings shall conform to ASTM C315.

2111.9.1 Smoke chamber dimensions. The inside height of the smoke chamber from the fireplace throat to the beginning of the flue shall be not greater than the inside width of the fireplace opening. The inside surface of the smoke chamber shall not be inclined more than 45 degrees (0.76 rad) from vertical where prefabricated smoke chamber linings are used or where the

DRAFT

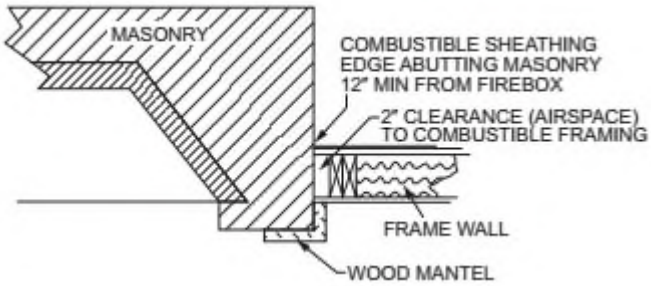

FIGURE 2113.19
ILLUSTRATION OF EXCEPTION THREE CHIMNEY CLEARANCE PROVISION

2113.20 Chimney fireblocking. All spaces between chimneys and floors and ceilings through which chimneys pass shall be fireblocked with noncombustible material securely fastened in place. The fireblocking of spaces between wood joists, beams or headers shall be self-supporting or be placed on strips of metal or metal lath laid across the spaces between combustible material and the chimney.

SECTION 2114
DRY-STACK MASONRY

2114.1 General. The design of dry-stack masonry structures shall comply with the requirements of Chapters 1 through 8 of TMS 402 except as modified by Sections 2114.2 through 2114.5.

2114.2 Limitations. Dry-stack masonry shall be prohibited in Risk Category IV structures.

2114.3 Materials. Concrete masonry units complying with ASTM C90 shall be used.

2114.4 Strength. Dry-stack masonry shall be of adequate strength and proportions to support all superimposed loads without exceeding the allowable stresses listed in Table 2114.4. Allowable stresses not specified in Table 2114.4 shall comply with the requirements of Chapter 8 of TMS 402.

TABLE 2114.4
GROSS CROSS-SECTIONAL AREA ALLOWABLE STRESS FOR DRY-STACK MASONRY

DESCRIPTION	MAXIMUM ALLOWABLE STRESS (psi)
Compression	45
Flexural tension Horizontal span Vertical span	 30 18
Shear	10

For SI:1 pound per square inch = 0.006895 MPa.

2114.5 Construction. Construction of dry-stack masonry shall comply with ASTM C946.

[S] SECTION 2115
EMISSION STANDARDS

[S] 2115.1 Emission standards for factory-built fireplaces. New and used factory-built fireplaces shall be certified and labeled in accordance with procedures and criteria specified in ASTM E2558 Standard Test Method for Determining Particulate Matter Emission from Fires in Low Mass Wood-burning Fireplaces.

To certify an entire fireplace model line, the internal assembly shall be tested to determine its particulate matter emission performance. Retesting and recertifying is required if the design and construction specifications of the fireplace model line internal assembly change. Testing for certification shall be performed by a Washington State Department of Ecology (DOE) approved and U. S. Environmental Protection Agency (EPA) accredited laboratory.

[S] 2115.2 Emission standards for certified masonry and concrete fireplaces. Masonry and concrete fireplace model lines certified to Washington State Building Code Standard 31-2 prior to July 1, 2013 may retain certification if the design and construction specifications of the fireplace model line internal assembly do not change.

DRAFT

14. Required permanent individual truss member restraint location and the method and details of restraint/bracing to be used in accordance with Section 2303.4.1.2.

[S] 2303.4.1.2 Permanent individual truss member restraint. Where permanent restraint of truss members is required on the truss design drawings, it shall be accomplished by one of the following methods:

1. Permanent individual truss member restraint/bracing shall be installed using standard industry lateral restraint/bracing details in accordance with generally accepted engineering practice. Locations for lateral restraint shall be identified on the truss design drawing.
2. The trusses shall be designed so that the buckling of any individual truss member is resisted internally by the individual truss through suitable means (for example, buckling reinforcement by T-reinforcement or L-reinforcement, proprietary reinforcement). The buckling reinforcement of individual members of the trusses shall be installed as shown on the truss design drawing or on supplemental truss member buckling reinforcement details provided by the truss designer.
3. A project-specific permanent individual truss member restraint/bracing design shall be permitted to be specified by any qualified *registered design professional*.

2303.4.1.3 Trusses spanning 60 feet or greater. The owner or the owner's authorized agent shall contract with any qualified *registered design professional* for the design of the temporary installation restraint/bracing and the permanent individual truss member restraint/bracing for all trusses with clear spans 60 feet (18 288 mm) or greater.

2303.4.1.4 Truss designer. The individual or organization responsible for the design of trusses.

2303.4.1.4.1 Truss design drawings. Where required by the *registered design professional*, the *building official* or the statutes of the jurisdiction in which the project is to be constructed, each individual truss design drawing shall bear the seal and signature of the truss designer.

Exceptions:

1. Where a cover sheet and truss index sheet are combined into a single sheet and attached to the set of truss design drawings, the single cover/truss index sheet is the only document required to be signed and sealed by the truss designer.
2. Where a cover sheet and a truss index sheet are separately provided and attached to the set of truss design drawings, the cover sheet and the truss index sheet are the only documents required to be signed and sealed by the truss designer.

2303.4.2 Truss placement diagram. The truss manufacturer shall provide a truss placement diagram that identifies the proposed location for each individually designated truss and references the corresponding truss design drawing. The truss placement diagram shall be provided as part of the truss submittal package, and with the shipment of trusses delivered to the job site. Truss placement diagrams that serve only as a guide for installation and do not deviate from the *permit* submittal drawings shall not be required to bear the seal or signature of the truss designer.

2303.4.3 Truss submittal package. The truss submittal package provided by the truss manufacturer shall consist of each individual truss design drawing, the truss placement diagram, the permanent individual truss member restraint/bracing method and details and any other structural details germane to the trusses; and, as applicable, the cover/truss index sheet.

2303.4.4 Anchorage. The design for the transfer of loads and anchorage of each truss to the supporting structure is the responsibility of the *registered design professional*.

2303.4.5 Alterations to trusses. Truss members and components shall not be cut, notched, drilled, spliced or otherwise altered in any way without written concurrence and approval of a *registered design professional*. Alterations resulting in the addition of loads to any member (for example, HVAC equipment, piping, additional roofing or insulation) shall not be permitted without verification that the truss is capable of supporting such additional loading.

[S] 2303.4.6 TPI 1 specifications. In addition to Sections 2303.4.1 through 2303.4.5, the design, manufacture and quality assurance of metal-plate-connected wood trusses shall be in accordance with TPI 1. Job-site inspections shall be in compliance with Section ((~~110.4~~)) 108, as applicable.

2303.4.7 Truss quality assurance. Trusses not part of a manufacturing process in accordance with either Section 2303.4.6 or a referenced standard, which provides requirements for quality control done under the supervision of a third-party quality control agency, shall be manufactured in compliance with Sections 1704.2.5 and 1705.5, as applicable.

2303.5 Test standard for joist hangers. Joist hangers shall be in accordance with ASTM D7147.

2303.6 Nails and staples. Nails and staples shall conform to requirements of ASTM F1667, including Supplement 1. Nails used for framing and sheathing connections shall have minimum average bending yield strengths as follows: 80 kips per square inch (ksi) (551 MPa) for shank diameters larger than 0.177 inch (4.50 mm) but not larger than 0.254 inch (6.45 mm), 90 ksi (620 MPa) for shank diameters larger than 0.142 inch (3.61 mm) but not larger than 0.177 inch (4.50 mm) and 100 ksi (689 MPa) for shank diameters of not less than 0.099 inch (2.51 mm) but not larger than 0.142 inch (3.61 mm). Staples used for framing and sheathing connections

DRAFT

shall have minimum average bending moments as follows: 3.6 in.-lbs (0.41 N-m) for No. 16 gage staples, 4.0 in.-lbs (0.45 N-m) for No. 15 gage staples, and 4.3 in.-lbs (0.49 N-m) for No. 14 gage staples. Staples allowable bending moments shall be listed on the construction documents.

2303.7 Shrinkage. Consideration shall be given in design to the possible effect of cross-grain dimensional changes considered vertically that may occur in lumber fabricated in a green condition.

SECTION 2304
GENERAL CONSTRUCTION REQUIREMENTS

2304.1 General. The provisions of this section apply to design methods specified in Section 2302.1.

2304.2 Size of structural members. Computations to determine the required sizes of members shall be based on the net dimensions (actual sizes) and not nominal sizes.

2304.3 Wall framing. The framing of exterior and interior walls shall be in accordance with the provisions specified in Section 2308 unless a specific design is furnished.

2304.3.1 Bottom plates. Studs shall have full bearing on a 2-inch-thick (actual 1-1/2-inch, 38 mm) or larger plate or sill having a width not less than equal to the width of the studs.

2304.3.2 Framing over openings. Headers, double joists, trusses or other *approved* assemblies that are of adequate size to transfer loads to the vertical members shall be provided over window and door openings in load-bearing walls and partitions.

2304.3.3 Shrinkage. Wood walls and bearing partitions shall not support more than two floors and a roof unless an analysis satisfactory to the *building official* shows that shrinkage of the wood framing will not have adverse effects on the structure or any plumbing, electrical or mechanical systems or other equipment installed therein due to excessive shrinkage or differential movements caused by shrinkage. The analysis shall show that the roof drainage system and the foregoing systems or equipment will not be adversely affected or, as an alternate, such systems shall be designed to accommodate the differential shrinkage or movements.

2304.4 Floor and roof framing. The framing of wood-joisted floors and wood-framed roofs shall be in accordance with the provisions specified in Section 2308 unless a specific design is furnished.

2304.5 Framing around flues and chimneys. Combustible framing shall be not less than 2 inches (51 mm), but shall be not less than the distance specified in Sections 2111 and 2113 and the *International Mechanical Code*, from flues, chimneys and fireplaces, and 6 inches (152 mm) away from flue openings.

2304.6 Exterior wall sheathing. Wall sheathing on the outside of exterior walls, including gables, and the connection of the sheathing to framing shall be designed in accordance with the general provisions of this code and shall be capable of resisting wind pressures in accordance with Section 1609.

2304.6.1 Wood structural panel sheathing. Where wood structural panel sheathing is used as the exposed finish on the outside of exterior walls, it shall have an exterior exposure durability classification. Where wood structural panel sheathing is used elsewhere, but not as the exposed finish, it shall be of a type manufactured with exterior glue (Exposure 1 or Exterior). Wood structural panel sheathing, connections and framing spacing shall be in accordance with Table 2304.6.1 for the applicable wind speed and exposure category where used in enclosed buildings with a mean roof height not greater than 30 feet (9144 mm) and a topographic factor (K_{zt}) of 1.0.

TABLE 2304.6.1
MAXIMUM ALLOWABLE STRESS DESIGN WIND SPEED, V_{asd} PERMITTED FOR WOOD STRUCTURAL PANEL WALL SHEATHING USED TO RESIST WIND PRESSURES[a, b, c]

MINIMUM NAIL		MINIMUM WOOD STRUCTURAL PANEL SPAN RATING	MINIMUM NOMINAL PANEL THICKNESS (inches)	MAXIMUM WALL STUD SPACING (inches)	PANEL NAIL SPACING		MAXIMUM ALLOWABLE STRESS DESIGN WIND SPEED, V_{asd}[d] (MPH)		
Size	Penetration (inches)				Edges (inches o.c.)	Field (inches o.c.)	Wind exposure category		
							B	C	D
6d common (2.0″ × 0.113″)	1.5	24/0	3/8	16	6	12	110	90	85
		24/16	7/16	16	6	12	110	100	90
						6	150	125	110
8d common (2.5″ × 0.131″)	1.75	24/16	7/16	16	6	12	130	110	105
						6	150	125	110
				24	6	12	110	90	85
						6	110	90	85

For SI: 1 inch = 25.4 mm, 1 mile per hour = 0.447 m/s.

DRAFT

2304.9.4.2 Nailing. Each piece of decking shall be toenailed at each support with one 16d common nail through the tongue and face-nailed with one 16d common nail.

2304.9.4.3 Controlled random pattern. There shall be a minimum distance of 24 inches (610 mm) between end joints in adjacent courses. The pieces in the first and second courses shall bear on not fewer than two supports with end joints in these two courses occurring on alternate supports. Not more than seven intervening courses shall be permitted before this pattern is repeated.

2304.9.5 Three- and four-inch sawn tongue-and-groove decking. Three- and four-inch (76 mm and 102 mm) sawn tongue-and-groove decking shall comply with Sections 2304.9.5.1 through 2304.9.5.3.

2304.9.5.1 General. Three-inch (76 mm) and four-inch (102 mm) decking shall have a maximum moisture content of 19 percent. Decking shall be machined with a double tongue-and-groove pattern. Decking pieces shall be interconnected and nailed to the supports.

2304.9.5.2 Nailing. Each piece shall be toenailed at each support with one 40d common nail and face-nailed with one 60d common nail. Courses shall be spiked to each other with 8-inch (203 mm) spikes at maximum intervals of 30 inches (762 mm) through predrilled edge holes penetrating to a depth of approximately 4 inches (102 mm). One spike shall be installed at a distance not exceeding 10 inches (254 mm) from the end of each piece.

2304.9.5.3 Controlled random pattern. There shall be a minimum distance of 48 inches (1219 mm) between end joints in adjacent courses. Pieces not bearing on a support are permitted to be located in interior bays provided that the adjacent pieces in the same course continue over the support for not less than 24 inches (610 mm). This condition shall not occur more than once in every six courses in each interior bay.

[W] 2304.10 Connectors and fasteners. Connectors and fasteners shall comply with the applicable provisions of Sections 2304.10.1 through ((~~2304.10.7~~)) 2304.10.8.

2304.10.1 Fastener requirements. Connections for wood members shall be designed in accordance with the appropriate methodology in Section 2302.1. The number and size of fasteners connecting wood members shall be not less than that set forth in Table 2304.10.1.

DRAFT

[W] 2304.10.8 Connection fire resistance rating. Fire resistance ratings for connections in Type IV-A, IV-B, or IV-C construction shall be determined by one of the following:

1. Testing in accordance with Section 703.2 where the connection is part of the fire resistance test.
2. Engineering analysis that demonstrates that the temperature rise at any portion of the connection is limited to an average temperature rise of 250°F (139°C), and a maximum temperature rise of 325°F (181°C), for a time corresponding to the required fire resistance rating of the structural element being connected. For the purposes of this analysis, the connection includes connectors, fasteners, and portions of wood members included in the structural design of the connection.

2304.11 Heavy timber construction. Where a structure, portion thereof or individual structural elements are required by provisions of this code to be of heavy timber, the building elements therein shall comply with the applicable provisions of Sections 2304.11.1 through 2304.11.4. Minimum dimensions of heavy timber shall comply with the applicable requirements in Table 2304.11 based on roofs or floors supported and the configuration of each structural element, or in Sections 2304.11.2 through 2304.11.4. Lumber decking shall be in accordance with Section 2304.9.

TABLE 2304.11
MINIMUM DIMENSIONS OF HEAVY TIMBER STRUCTURAL MEMBERS

		MINIMUM NOMINAL SOLID SAWN SIZE		MINIMUM GLUED-LAMINATED NET SIZE		MINIMUM STRUCTURAL COMPOSITE LUMBER NET SIZE	
SUPPORTING	HEAVY TIMBER STRUCTURAL ELEMENTS	Width, inch	Depth, inch	Width, inch	Depth, inch	Width, inch	Depth, inch
Floor loads only or combined floor and roof loads	Columns; Framed sawn or glued-laminated timber arches that spring from the floor line; Framed timber trusses	8	8	6-3/4	8-1/4	7	7-1/2
	Wood beams and girders	6	10	5	10-1/2	5-1/4	9-1/2
Roof loads only	Columns (roof and ceiling loads); Lower half of: wood-frame or glued-laminated arches that spring from the floor line or from grade	6	8	5	8-1/4	5-1/4	7-1/2
	Upper half of: wood-frame or glued-laminated arches that spring from the floor line or from grade	6	6	5	6	5-1/4	5-1/2
	Framed timber trusses and other roof framing; [a] Framed or glued-laminated arches that spring from the top of walls or wall abutments	4[b]	6	3[b]	6-7/8	3-1/2[b]	5-1/2

For SI: 1 inch = 25.4 mm.

a. Spaced members shall be permitted to be composed of two or more pieces not less than 3 inches nominal in thickness where blocked solidly throughout their intervening spaces or where spaces are tightly closed by a continuous wood cover plate of not less than 2 inches nominal in thickness secured to the underside of the members. Splice plates shall be not less than 3 inches nominal in thickness.

b. Where protected by approved automatic sprinklers under the roof deck, framing members shall be not less than 3 inches nominal in width.

2304.11.1 Details of heavy timber structural members. Heavy timber structural members shall be detailed and constructed in accordance with Sections 2304.11.1 through 2304.11.1.3.

2304.11.1.1 Columns. Minimum dimensions of columns shall be in accordance with Table 2304.11. Columns shall be continuous or superimposed throughout all stories and connected in an approved manner. Girders and beams at column connections shall be closely fitted around columns and adjoining ends shall be cross tied to each other, or intertied by caps or ties, to transfer horizontal loads across joints. Wood bolsters shall not be placed on tops of columns unless the columns support roof loads only. Where traditional heavy timber detailing is used, connections shall be by means of reinforced concrete or metal caps with brackets, by properly designed steel or iron caps, with pintles and base plates, by timber splice plates affixed to the columns by metal connectors housed within the contact faces, or by other approved methods.

2304.11.1.2 Floor framing. Minimum dimensions of floor framing shall be in accordance with Table 2304.11. *Approved* wall plate boxes or hangers shall be provided where wood beams, girders or trusses rest on masonry or concrete walls. Where intermediate beams are used to support a floor, they shall rest on top of girders, or shall be supported by an *approved* metal hanger into which the ends of the beams shall be closely fitted. Where traditional heavy timber detailing is used, these connections shall be permitted to be supported by ledgers or blocks securely fastened to the sides of the girders.

DRAFT

2407.1.2 Structural glass baluster panels. Guards with structural glass baluster panels shall be installed with an attached top rail or handrail. The top rail or handrail shall be supported by not fewer than three glass baluster panels, or shall be otherwise supported to remain in place should one glass baluster panel fail.

Exception: An attached top rail or handrail is not required where the glass baluster panels are laminated glass with two or more glass plies of equal thickness and of the same glass type. The panels shall be tested to remain in place as a barrier following impact or glass breakage in accordance with ASTM E2353.

2407.1.3 Parking garages. Glazing materials shall not be installed in handrails or *guards* in parking garages except for pedestrian areas not exposed to impact from vehicles.

2407.1.4 Glazing in windborne debris regions. Glazing installed in in-fill panels or balusters in *windborne debris regions* shall comply with the following:

2407.1.4.1 Balusters and in-fill panels. Glass installed in exterior railing in-fill panels or balusters shall be laminated glass complying with Category II of CPSC 16 CFR Part 1201 or Class A of ANSI Z97.1.

2407.1.4.2 Glass supporting top rail. Where the top rail is supported by glass, the assembly shall be tested according to the impact requirements of Section 1609.2. The top rail shall remain in place after impact.

SECTION 2408
GLAZING IN ATHLETIC FACILITIES

2408.1 General. Glazing in athletic facilities and similar uses subject to impact loads, which forms whole or partial wall sections or which is used as a door or part of a door, shall comply with this section.

2408.2 Racquetball and squash courts.

2408.2.1 Testing. Test methods and loads for individual glazed areas in racquetball and squash courts subject to impact loads shall conform to those of CPSC 16 CFR Part 1201 or ANSI Z97.1 with impacts being applied at a height of 59 inches (1499 mm) above the playing surface to an actual or simulated glass wall installation with fixtures, fittings and methods of assembly identical to those used in practice.

Glass walls shall comply with the following conditions:

1. A glass wall in a racquetball or squash court, or similar use subject to impact loads, shall remain intact following a test impact.
2. The deflection of such walls shall be not greater than 1-1/2 inches (38 mm) at the point of impact for a drop height of 48 inches (1219 mm).

Glass doors shall comply with the following conditions:

1. Glass doors shall remain intact following a test impact at the prescribed height in the center of the door.
2. The relative deflection between the edge of a glass door and the adjacent wall shall not exceed the thickness of the wall plus 1/2 inch (12.7 mm) for a drop height of 48 inches (1219 mm).

2408.3 Gymnasiums and basketball courts. Glazing in multipurpose gymnasiums, basketball courts and similar athletic facilities subject to human impact loads shall comply with Category II of CPSC 16 CFR Part 1201 or Class A of ANSI Z97.1.

SECTION 2409
GLASS IN WALKWAYS, ELEVATOR HOISTWAYS AND ELEVATOR CARS

[S] 2409.1 Glass walkways. Glass installed as ((~~a part of a floor/ceiling assembly as~~)) a walking surface ((~~and constructed with~~)) shall comply with Chapter 16.

Exception: ((~~laminated~~)) Laminated glass ((~~shall comply~~)) designed in accordance with ASTM E2751 ((~~or with the load requirements specified in~~)) is not required to comply with Chapter 16.

Such assemblies shall comply with the *fire-resistance rating* and marking requirements of this code where applicable.

2409.2 Glass in elevator hoistway enclosures. Glass in elevator hoistway enclosures and hoistway doors shall be laminated glass conforming to ANSI Z97.1 or CPSC 16 CFR Part 1201.

2409.2.1 Fire-resistance-rated hoistways. Glass installed in hoistways and hoistway doors where the hoistway is required to have a fire-resistance rating shall comply with Section 716.

2409.2.2 Glass hoistway doors. The glass in glass hoistway doors shall be not less than 60 percent of the total visible door panel surface area as seen from the landing side.

2409.3 Visions panels in elevator hoistway doors. Glass in vision panels in elevator hoistway doors shall be permitted to be any transparent glazing material not less than 1/4 inch (6.4 mm) in thickness conforming to Class A in accordance with ANSI

DRAFT

CHAPTER 25

GYPSUM BOARD, GYPSUM PANEL PRODUCTS AND PLASTER

User notes:

About this chapter: *Chapter 25 contains the provisions and referenced standards that regulate the design, construction and quality of gypsum board, gypsum panel products and plaster and, in addition, addresses reinforced gypsum concrete. These materials are some of the most commonly used interior and exterior finish materials in the building industry. This chapter primarily addresses quality-control-related issues with regard to material specifications and installation requirements. Most products are manufactured in accordance with industry standards. The building official or inspector needs to verify that the appropriate product is used and properly installed for the intended use and location. Proper design and installation of these materials are necessary to provide weather resistance and required fire protection for both structural and nonstructural building components.*

Code development reminder: *Code change proposals to this chapter will be considered by the IBC—Structural Code Development Committee during the 2019 (Group B) Code Development Cycle. See explanation on page iv.*

SECTION 2501
GENERAL

2501.1 Scope. Provisions of this chapter shall govern the materials, design, construction and quality of gypsum board, gypsum panel products, lath, gypsum plaster, cement plaster and reinforced gypsum concrete.

2501.2 Other materials. Other *approved* wall or ceiling coverings shall be permitted to be installed in accordance with the recommendations of the manufacturer and the conditions of approval.

SECTION 2502
PERFORMANCE

2502.1 General. Lathing, plastering and gypsum board and gypsum panel product construction shall be done in the manner and with the materials specified in this chapter and, where required for fire protection, shall comply with the provisions of Chapter 7.

SECTION 2503
INSPECTION

[S] 2503.1 Inspection. Lath, gypsum board and gypsum panel products shall be inspected in accordance with Section ((~~110.3.5~~)) 108.9.

SECTION 2504
VERTICAL AND HORIZONTAL ASSEMBLIES

2504.1 Scope. The following requirements shall be met where construction involves gypsum board, gypsum panel products or lath and plaster in vertical and horizontal assemblies.

2504.1.1 Wood framing. Wood supports for lath, gypsum board or gypsum panel products, as well as wood stripping or furring, shall be not less than 2 inches (51 mm) nominal thickness in the least dimension.

Exception: The minimum nominal dimension of wood furring strips installed over solid backing shall be not less than 1 inch by 2 inches (25 mm by 51 mm).

2504.1.2 Studless partitions. The minimum thickness of vertically erected studless solid plaster partitions of 3/8-inch (9.5 mm) and 3/4-inch (19.1 mm) rib metal lath, 1/2-inch-thick (12.7 mm) gypsum lath, gypsum board or gypsum panel product shall be 2 inches (51 mm).

SECTION 2505
SHEAR WALL CONSTRUCTION

2505.1 Resistance to shear (wood framing). Wood-frame shear walls sheathed with gypsum board, gypsum panel products or lath and plaster shall be designed and constructed in accordance with Section 2306.3 and are permitted to resist wind and seismic loads. Walls resisting seismic loads shall be subject to the limitations in Section 12.2.1 of ASCE 7.

DRAFT

CHAPTER 27

ELECTRICAL

User note:

About this chapter: *Electrical systems and components are integral to most structures; therefore it is necessary for the code to address their installation and protection. Structures depend on electricity for the operation of many life safety systems including fire alarm, smoke control and exhaust, fire suppression, fire command and communication systems. Since power supply to these systems is essential, Chapter 27 addresses where standby and emergency power must be provided.*

SECTION 2701
GENERAL

[S] 2701.1 Scope. The provisions of this chapter and ((~~NFPA 70~~)) the *Seattle Electrical Code* shall govern the design, construction, erection and installation of the electrical components, appliances, equipment and systems used in buildings and structures covered by this code. The *International Fire Code*, the *International Property Maintenance Code* and ((~~NFPA 70~~)) the *Seattle Electrical Code* shall govern the use and maintenance of electrical components, appliances, equipment and systems. The *International Existing Building Code* and ((~~NFPA 70~~)) the *Seattle Electrical Code* shall govern the alteration, repair, relocation, replacement and addition of electrical components, appliances, or equipment and systems.

DRAFT

SECTION 2702
EMERGENCY AND LEGALLY REQUIRED STANDBY POWER SYSTEMS

[S][F] 2702.1 General. Emergency power systems and *legally required* standby power systems shall comply with Sections 2702.1.1 through 2702.1.8.

[S][F] 2702.1.1 Stationary generators. Stationary emergency and legally required standby power generators required by this code shall be listed in accordance with UL 2200.

[F] 2702.1.2 Fuel-line piping protection. Fuel lines supplying a generator set inside a *high-rise building* shall be separated from areas of the *building* other than the room the generator is located in by an *approved* method, or an assembly that has a fire-resistance rating of not less than 2 hours. Where the *building* is protected throughout with an automatic sprinkler system installed in accordance with Section 903.3.1.1, the required fire-resistance rating shall be reduced to 1 hour.

[S][F] 2702.1.3 Installation. Emergency power systems and *legally required* standby power systems required by this code or the *International Fire Code* shall be installed in accordance with the *International Fire Code*, ((~~NFPA 70~~)) the *Seattle Electrical Code*, NFPA 110 and NFPA 111.

Exceptions:

1. Where located within a sprinklered parking garage of Type I or II construction, emergency power and *legally required standby power systems* with fixed fuel quantities meeting the limits of Section 603.3 of the *International Fire Code*, and their transfer switches, are not required to be in a separate room. Other occupancies located in the *story* where the system is located shall be separated from the system by fire barriers with a minimum 1 hour fire-resistance rating.
2. Combustion and radiator intake air are permitted to be transferred from the adjacent garage. Radiator discharge air is permitted to be transferred to the adjacent garage. Radiator ventilation intake and discharge air locations shall be separated to maintain the radiator ventilation intake air temperature below the maximum temperature allowed to meet the emergency and *legally required standby power system* loads.

[S][F] 2702.1.4 Load transfer. Emergency power systems shall automatically provide secondary power within 10 seconds after primary power is lost, unless specified otherwise in this code. ((~~Standby~~)) *Legally required standby* power systems shall automatically provide secondary power within 60 seconds after primary power is lost, unless specified otherwise in this code.

[W][S][F] 2702.1.5 Load duration. *Emergency power systems* and *legally required standby power systems* shall be designed to provide the required power for a minimum duration of ((~~2~~)) 8 hours without being refueled or recharged, unless specified otherwise in this code.

EXCEPTION: The minimum duration of all required power loads may be reduced to 2 hours for all systems except for fire pumps that require a minimum duration of 8 hours in accordance with NFPA 20.

[F] 2702.1.6 Uninterruptable power source. An uninterrupted source of power shall be provided for equipment where required by the manufacturer's instructions, the listing, this code or applicable referenced standards.

[F] 2702.1.7 Interchangeability. Emergency power systems shall be an acceptable alternative for installations that require standby power systems.

[F] 2702.1.8 Group I-2 occupancies. In Group I-2 occupancies located in flood hazard areas established in Section 1612.3, where new essential electrical systems are installed, and where new essential electrical system generators are installed, the systems and generators shall be located and installed in accordance with ASCE 24. Where connections for hookup of temporary generators are provided, the connections shall be located at or above the elevation required in ASCE 24.

[S][F] 2702.2 Where required. Emergency and *legally required* standby power systems shall be provided where required by Sections 2702.2.1 through 2702.2.18 and other sections of this code.

[F] 2702.2.1 Ambulatory care facilities. Essential electrical systems for ambulatory care facilities shall comply with Section 422.6.

[S][F] 2702.2.2 Elevators and platform lifts. ((~~Standby~~)) Legally required standby power shall be provided for elevators and platform lifts used as accessible *means of egress* as required in Sections 1009.4.1 ((~~,~~)) and 1009.5. ((~~, 3003.1, 3007.8 and 3008.8.~~)) Emergency power shall be provided for elevators in high-rise buildings as required in Section 403.4.8.4.

[S][F] 2702.2.3 Emergency responder radio coverage systems. Emergency power shall be provided for emergency responder radio coverage systems in high-rise buildings as required in Section 403.4.8.4. ((~~Standby~~)) Legally required standby power shall be provided for other emergency responder radio coverage systems required in ((~~Section 918 and~~)) the *International Fire Code*. ((~~The standby power supply shall be capable of operating the emergency responder radio coverage system for a duration of not less than 12 hours at 100-percent system operation capacity.~~))

[F] 2702.2.4 Emergency voice/alarm communication systems. Emergency power shall be provided for emergency voice/alarm communication systems as required in Section 907.5.2.2.5. The system shall be capable of powering the required load for a duration of not less than 24 hours, as required in NFPA 72.

[F] 2702.2.5 Exhaust systems. Standby power shall be provided for common exhaust systems for domestic kitchens located in multistory structures as required in Section 505.5 of the *International Mechanical Code.* Standby power shall be provided for common exhaust systems for clothes dryers located in multistory structures as required in Section 504.10 of the *International Mechanical Code* and Section 614.10 of the *International Fuel Gas Code*.

[F] 2702.2.6 Exit signs. Emergency power shall be provided for exit signs as required in Section 1013.6.3. The system shall be capable of powering the required load for a duration of not less than 90 minutes.

[F] 2702.2.7 Gas detection system. Emergency or standby power shall be provided for gas detection systems in accordance with the *International Fire Code*.

[F] 2702.2.8 Group I-2 occupancies. Essential electrical systems for Group I-2 occupancies shall be in accordance with Section 407.11.

[F] 2702.2.9 Group I-3 occupancies. Emergency power shall be provided for power-operated doors and locks in Group I-3 occupancies as required in Section 408.4.2.

[S][F] 2702.2.10 Hazardous materials. Emergency or legally required standby power shall be provided in occupancies with hazardous materials where required by the *International Fire Code*.

[S][F] 2702.2.11 High-rise buildings. Emergency ((~~and standby~~)) power shall be provided in high-rise buildings as required in Section 403.4.8.

[F] 2702.2.12 Laboratory suites. Standby or emergency power shall be provided in accordance with Section 5004.7 of the *International Fire Code* where *laboratory suites* are located above the sixth story above grade plane or located in a story below grade plane.

[F] 2702.2.13 Means of egress illumination. Emergency power shall be provided for means of egress illumination as required in Section 1008.3. The system shall be capable of powering the required load for a duration of not less than 90 minutes.

[S][F] 2702.2.14 Membrane structures. ((~~Standby~~)) Legally required standby power shall be provided for auxiliary inflation systems in permanent membrane structures as required in Section 3102.8.2. ((~~Standby~~)) Legally required standby power shall be provided for a duration of not less than 4 hours. Auxiliary inflation systems in temporary air-supported and air-inflated membrane structures shall be provided in accordance with Section 3103.10.4 of the *International Fire Code.*

[F] 2702.2.15 Semiconductor fabrication facilities. Emergency power shall be provided for semiconductor fabrication facilities as required in Section 415.11.10.

DRAFT

[S][F] 2702.2.16 Smoke control systems. ((~~Standby~~)) Emergency power shall be provided for smoke control systems as required in Sections 404.7, 909.11, 909.20.5.7, 909.20.6.2 and 909.21.5. *Legally required standby power systems* shall be provided for pressurization systems in low-rise buildings in accordance with Sections 909.20.6 and 909.21.5.

[S][F] 2702.2.17 Special purpose horizontal sliding, accordion or folding doors. ((~~Standby~~)) Legally required standby power shall be provided for special purpose horizontal sliding, accordion or folding doors as required in Section 1010.1.4.3. The standby power supply shall have a capacity to operate not fewer than 50 closing cycles of the door.

[S][F] 2702.2.18 Underground buildings. Emergency ((~~and standby~~)) power shall be provided in underground buildings as required in Section 405.

[F] 2702.3 Critical circuits. Required critical circuits shall be protected using one of the following methods:

1. Cables, used for survivability of required critical circuits, that are listed in accordance with UL 2196 and have a fire-resistance rating of not less than 1 hour.
2. Electrical circuit protective systems having a fire-resistance rating of not less than 1 hour. Electrical circuit protective systems are installed in accordance with their listing requirements.
3. Construction having a fire-resistance rating of not less than 1 hour.

[F] 2702.4 Maintenance. Emergency and standby power systems shall be maintained and tested in accordance with the *International Fire Code*.

DRAFT

CHAPTER 29

PLUMBING SYSTEMS

User note:

About this chapter: *Plumbing systems are another key element of any building. Chapter 29 provides the necessary number of plumbing fixtures, including water closets, lavatories, bathtubs and showers. The quality and design of each fixture must be in accordance with the* International Plumbing Code®*.*

SECTION 2901
GENERAL

[S][P] 2901.1 Scope. The provisions of this chapter and the ((~~*International*~~)) *Uniform Plumbing Code* shall govern the design, construction, erection and installation of plumbing components, appliances, equipment and systems used in *buildings* and structures covered by this code. Toilet and bathing rooms shall be constructed in accordance with Section 1209. ((~~Private sewage disposal systems shall conform to the *International Private Sewage Disposal Code.*~~)) The *International Fire Code*, the *International Property Maintenance Code* and the ((~~*International*~~)) *Uniform Plumbing Code* shall govern the use and maintenance of plumbing components, appliances, equipment and systems. The *International Existing Building Code* and the ((~~*International*~~)) *Uniform Plumbing Code* shall govern the *alteration, repair,* relocation, replacement and *addition* of plumbing components, *appliances, equipment* and systems.

[S] 2901.2 Enforcement. The Director of Public Health–Seattle and King County is authorized to enforce this chapter.

[S] 2901.3 Health codes. In food preparation, serving and related storage areas, additional fixture requirements may be dictated by state and local health codes.

[W] 2901.4 Fixed guideway transit and passenger rail systems. In construction of a fixed guideway and passenger rail system, subject to Section 3114, public plumbing fixtures are not required.

SECTION 2902
MINIMUM PLUMBING FACILITIES

[S][P] 2902.1 Minimum number of fixtures. Plumbing fixtures shall be provided in the minimum number as shown in Table 2902.1. ((~~based on the actual use of the building or space.~~)) Uses not shown in Table 2902.1 shall be ((~~considered~~)) determined individually by the ((~~code~~)) *building official* based on the occupancy which most nearly resembles the proposed occupancy. The number of occupants shall be determined by this code. Plumbing fixtures need not be provided for unoccupied buildings or facilities.

DRAFT

[S][P] TABLE 2902.1
MINIMUM NUMBER OF REQUIRED PLUMBING FIXTURES[a]
(See Sections 2902.1.1 and 2902.2)

No.	CLASSIFICATION	DESCRIPTION	WATER CLOSETS (((~~URINALS SEE SECTION 424.2 OF THE INTERNATIONAL PLUMBING CODE~~)))		LAVATORIES		BATHTUBS/ SHOWERS	((~~DRINKING FOUNTAINS (SEE SECTION 410 OF THE INTERNATIONAL PLUMBING CODE)~~	~~OTHER~~))
			Male	Female	Male	Female			
1	Assembly	Theaters and other buildings for the performing arts and motion pictures[d]	1 per 125	1 per 65	1 per 200		—	((~~1 per 500~~	~~1 service sink~~
		Nightclubs, bars, taverns, dance halls and buildings for similar purposes[d]	1 per 40	1 per 40	1 per 75		—	((~~1 per 500~~	~~1 service sink~~
		Restaurants, banquet halls and food courts[d]	1 per 75	1 per 75	1 per 200		—	((~~1 per 500~~	~~1 service sink~~
		Casino gaming areas	1 per 100 for the first 400 and 1 per 250 for the remainder exceeding 400	1 per 50 for the first 400 and 1 per 150 for the remainder exceeding 400	1 per 250 for the first 750 and 1 per 500 for the remainder exceeding 750		—	((~~1 per 1,000~~	~~1 service sink~~
		Auditoriums without permanent seating, art galleries, exhibition halls, museums, lecture halls, libraries, arcades and gymnasiums[d]	1 per 125	1 per 65	1 per 200		—	((~~1 per 500~~	~~1 service sink~~
		Passenger terminals and transportation facilities[d]	1 per 500	1 per 500	1 per 750		—	((~~1 per 1,000~~	~~1 service sink~~
		Places of worship and other religious services[d]	1 per 150	1 per 75	1 per 200		—	((~~1 per 1,000~~	~~1 service sink~~
		Coliseums, arenas, skating rinks, pools and tennis courts for indoor sporting events and activities	1 per 75 for the first 1,500 and 1 per 120 for the remainder exceeding 1,500	1 per 40 for the first 1,520 and 1 per 60 for the remainder exceeding 1,520	1 per 200	1 per 150	—	((~~1 per 1,000~~	~~1 service sink~~
		Stadiums, amusement parks, bleachers and grandstands for outdoor sporting events and activities[f]	1 per 75 for the first 1,500 and 1 per 120 for the remainder exceeding 1,500	1 per 40 for the first 1,520 and 1 per 60 for the remainder exceeding 1,520	1 per 200	1 per 150	—	((~~1 per 1,000~~	~~1 service sink~~

DRAFT

[S][P] TABLE 2902.1—continued
MINIMUM NUMBER OF REQUIRED PLUMBING FIXTURES[a]
(See Sections 2902.1.1 and 2902.2)

No.	CLASSIFICATION	DESCRIPTION	WATER CLOSETS (((~~URINALS SEE SECTION 424.2 OF THE INTERNATIONAL PLUMBING CODE~~)))		LAVATORIES		BATHTUBS/ SHOWERS	((~~DRINKING FOUNTAINS (SEE SECTION 410 OF THE INTERNATIONAL PLUMBING CODE)~~	~~OTHER~~))
			Male	Female	Male	Female			
2	Business	Buildings for the transaction of business, professional services, other services involving merchandise, office buildings, banks, light industrial, ambulatory care and similar uses	1 per 25 for the first 50 and 1 per 50 for the remainder exceeding 50		1 per 40 for the first 80 and 1 per 80 for the remainder exceeding 80		—	((~~1 per 100~~	~~1 service sink[e]~~))
3	Educational	Educational facilities	1 per ((~~50~~)) 35		1 per 85	1 per 50	—	((~~1 per 100~~	~~1 service sink~~))
4	Factory and industrial	Structures in which occupants are engaged in work fabricating, assembly or processing of products or materials	1 per 100		1 per 100		((—)) See footnote g	((~~1 per 400~~	~~1 service sink~~))
5	Institutional	Custodial care facilities	1 per 10		1 per 10		1 per 8	((~~1 per 100~~	~~1 service sink~~))
		Medical care recipients in hospitals and nursing homes[b]	1 per room[c]		1 per room[c]		1 per 15	((~~1 per 100~~	~~1 service sink~~))
		Employees in hospitals and nursing homes[b]	1 per 25		1 per 35		—	((~~1 per 100~~	—))
		Visitors in hospitals and nursing homes	1 per 75		1 per 100		—	((~~1 per 500~~	—))
		Prisons[b]	1 per cell		1 per cell		1 per 15	((~~1 per 100~~	~~1 service sink~~))
		Reformatories, detention centers and correctional centers[b]	1 per 15		1 per 15		1 per 15	((~~1 per 100~~	~~1 service sink~~))
		Employees in reformitories, detention centers and correctional centers[b]	1 per 25		1 per 35		—	((~~1 per 100~~	—))
		Adult day care and child day care	1 per 15		1 per 15		1	((~~1 per 100~~	~~1 service sink~~))

DRAFT

[S][P] TABLE 2902.1—continued
MINIMUM NUMBER OF REQUIRED PLUMBING FIXTURES[a]
(See Sections 2902.1.1 and 2902.2)

No.	CLASSIFICATION	DESCRIPTION	WATER CLOSETS (((~~URINALS SEE SECTION 424.2 OF THE *INTERNATIONAL PLUMBING CODE*~~)))		LAVATORIES		BATHTUBS/ SHOWERS	((~~DRINKING FOUNTAINS (SEE SECTION 410 OF THE *INTERNATIONAL PLUMBING CODE*)~~	~~OTHER~~))
			Male	Female	Male	Female			
6	Mercantile	Retail stores, service stations, shops, salesrooms, markets and shopping centers	1 per 500		1 per 750		—	((~~1 per 1,000~~	~~1 service sink[e]~~))
7	Residential	Hotels, motels, boarding houses (transient)	1 per sleeping unit		1 per sleeping unit		1 per sleeping unit	((—	~~1 service sink~~))
		Dormitories, fraternities, sororities and boarding houses (not transient)	1 per 10		1 per 10		1 per 8	((~~1 per 100~~	~~1 service sink~~))
		Apartment house	1 per dwelling unit		1 per dwelling unit		1 per dwelling unit	((—	~~1 kitchen sink per dwelling unit; 1 automatic clothes washer connection per 20 dwelling units~~))
		One- and two-family dwellings and lodging houses with five or fewer guestrooms	1 per dwelling unit		1 per 10		1 per dwelling unit	((—	~~1 kitchen sink per dwelling unit; 1 automatic clothes washer connection per dwelling unit~~))
		Congregate living facilities with 16 or fewer persons	1 per 10		1 per 10		1 per 8	((~~1 per 100~~	~~1 service sink~~))
8	Storage	Structures for the storage of goods, warehouses, storehouses and freight depots, low and moderate hazard	1 per 100		1 per 100		((—)) See footnote g	((~~1 per 1,000~~	~~1 service sink~~))

a. The fixtures shown are based on one fixture being the minimum required for the number of persons indicated or any fraction of the number of persons indicated. The number of occupants shall be determined by this code, except with respect to Group E occupancies the provisions of note "e" shall apply.
b. Toilet facilities for employees shall be separate from facilities for inmates or care recipients.
c. A single-occupant toilet room with one water closet and one lavatory serving not more than two adjacent patient sleeping units shall be permitted, provided that each patient sleeping unit has direct access to the toilet room and provisions for privacy for the toilet room user are provided.
d. The occupant load for seasonal outdoor seating and entertainment areas shall be included when determining the minimum number of facilities required.
e. ((~~For business and mercantile classifications with an occupant load of 15 or fewer, a service sink shall not be required.~~)) For Group E occupancies the number of occupants shall be determined by using a calculation of 100 square feet gross building area per student for the minimum number of plumbing fixtures.
f. The required number and type of plumbing fixtures for outdoor swimming pools shall be in accordance with Section 609 of the *International Swimming Pool and Spa Code*.
g. See *Uniform Plumbing Code* Section 416.0 for installation requirements for emergency shower and eyewash equipment.

[P] 2902.1.1 Fixture calculations. To determine the *occupant load* of each sex, the total *occupant load* shall be divided in half. To determine the required number of fixtures, the fixture ratio or ratios for each fixture type shall be applied to the *occupant load* of each sex in accordance with Table 2902.1. Fractional numbers resulting from applying the fixture ratios of Table

DRAFT

2902.1 shall be rounded up to the next whole number. For calculations involving multiple occupancies, such fractional numbers for each occupancy shall first be summed and then rounded up to the next whole number.

Exception: The total *occupant load* shall not be required to be divided in half where *approved* statistical data indicate a distribution of the sexes of other than 50 percent of each sex.

[S] 2902.1.1.1 Private offices. Fixtures only accessible to private offices shall not be counted to determine compliance with this section.

[W] 2902.1.1.2 Urinals in men's facilities. Where urinals are provided in men's facilities, one water closet less than the number specified may be provided for each urinal installed, except the number of water closets in such cases shall not be reduced to less than 25 percent of the minimum specified. For men's facilities serving 26 or more persons, not less than one urinal shall be provided.

2902.1.1.3 Urinals in gender neutral facilities. Where urinals are provided in gender-neutral facilities, one water closet less than the number specified may be provided for each urinal installed, except the number of water closets in such cases shall not be reduced to less than 25 percent of the minimum specified. For facilities serving 26 or more persons, not less than one urinal shall be provided.

[P] 2902.1.2 Single-user toilet facility and bathing room fixtures. The plumbing fixtures located in single-user toilet facilities and bathing rooms, including family or assisted-use toilet and bathing rooms that are required by Section 1109.2, shall contribute toward the total number of required plumbing fixtures for a building or tenant space. Single-user toilet facilities and bathing rooms, and family or assisted-use toilet rooms and bathing rooms shall be identified for use by either sex.

[P] 2902.1.3 Lavatory distribution. Where two or more toilet rooms are provided for each sex, the required number of lavatories shall be distributed proportionately to the required number of water closets.

2902.1.4 Family or assisted-use toilet and bath fixtures. Fixtures located within family or assisted-use toilet and bathing rooms required by Section 1109.2.1 are permitted to be included in the number of required fixtures for either the male or female occupants in assembly and mercantile occupancies.

[W][S][P] 2902.2 Separate facilities. Where plumbing fixtures are required, separate facilities shall be provided for each sex.

Exceptions:

1. Separate facilities shall not be required for *dwelling units* and *sleeping units*.
2. Separate facilities shall not be required in structures or tenant spaces with a total *occupant load*, including both employees and customers, of 15 or fewer.
3. Separate facilities shall not be required in mercantile occupancies in which the maximum occupant load is 100 or fewer.
4. Separate facilities shall not be required in business occupancies in which the maximum occupant load is ((~~25~~)) 30 or fewer.
5. Single-occupant restrooms shall not be restricted to a specific sex or gender identity and shall use appropriate signage to indicate such facilities are designated for use by any person, regardless of sex or gender identity. See SMC 14.07.
6. Separate facilities shall not be required when gender-neutral facilities are provided in accordance with Section 2902.2.2.

[P] 2902.2.1 Family or assisted-use toilet facilities serving as separate facilities. Where a building or tenant space requires a separate toilet facility for each sex and each toilet facility is required to have only one water closet, two family or assisted-use toilet facilities shall be permitted to serve as the required separate facilities. Family or assisted-use toilet facilities shall not be required to be identified for exclusive use by either sex as required by Section 2902.4.

[W] 2902.2.2 Gender-neutral facilities. Gender-neutral toilet facilities, when provided, shall be in accordance with the following:

1. There is no reduction in the number of fixtures required to be provided for male and female in the type of occupancy and in the minimum number shown in Table 2902.1.
2. Gender-neutral multiuser toilet rooms shall have water closets and urinals located in toilet compartments in accordance with ICC A117.1.
3. Gender-neutral multiuser toilet room water closet and urinal compartments shall have full-height walls and a door enclosing the fixture to ensure privacy.
4. Gender-neutral toilet room water closet and urinal compartment doors shall be securable from within the compartment.
5. Gender-neutral toilet rooms provided for the use of multiple occupants, the egress door from the room shall not be lockable from the inside of the room.
6. Compartments shall not be required in a single-occupant toilet room with a lockable door.

[P] 2902.3 Employee and public toilet facilities. For structures and tenant spaces intended for public utilization, customers, patrons and visitors shall be provided with public toilet facilities. Employees associated with structures and tenant spaces shall be provided with toilet facilities. The number of plumbing fixtures located within the required toilet facilities shall be provided

DRAFT

in accordance with Section 2902 for all users. Employee toilet facilities shall be either separate or combined employee and public toilet facilities.

Exception: Public toilet facilities shall not be required for:

1. Parking garages where operated without parking attendants.
2. Structures and tenant spaces intended for quick transactions, including takeout, pickup and drop-off, having a public access area less than or equal to 300 square feet (28 m^2).

[S][P] 2902.3.1 Access. The route to the public toilet facilities required by Section 2902.3 shall not pass through kitchens, food preparation areas, unpackaged food storage areas, storage rooms or closets. Access to the required facilities shall be from within the building or from the exterior of the building. Access to toilets serving multiple tenants shall be through a common use area and not through an area controlled by a tenant. Routes shall comply with the accessibility requirements of this code. The public shall have access to the required toilet facilities at all times that the building is occupied. For other requirements for plumbing facilities, see Chapter 11.

[P] 2902.3.2 Prohibited toilet room location. Toilet rooms shall not open directly into a room used for the preparation of food for service to the public.

[S][P] 2902.3.3 Location of toilet facilities in occupancies other than malls. In occupancies other than covered and open mall buildings, the required public and employee toilet facilities shall be located in each building not more than one *story* above or below the space required to be provided with toilet facilities, or conveniently in a building adjacent thereto on the same property, and the path of travel to such facilities shall not exceed a distance of 500 feet (152 m).

Exception: The location and maximum distances of travel to required employee facilities in factory and industrial occupancies are permitted to exceed that required by this section, provided that the location and maximum distance of travel are *approved*.

[P] 2902.3.4 Location of toilet facilities in malls. In covered and open mall buildings, the required public and employee toilet facilities shall be located not more than one story above or below the space required to be provided with toilet facilities, and the path of travel to such facilities shall not exceed a distance of 300 feet (91 mm). In mall buildings, the required facilities shall be based on total square footage (m^2) within a covered mall building or within the perimeter line of an open mall building, and facilities shall be installed in each individual store or in a central toilet area located in accordance with this section. The maximum distance of travel to central toilet facilities in mall buildings shall be measured from the main entrance of any store or tenant space. In mall buildings, where employees' toilet facilities are not provided in the individual store, the maximum distance of travel shall be measured from the employees' work area of the store or tenant space.

[P] 2902.3.5 Pay facilities. Where pay facilities are installed, such facilities shall be in excess of the required minimum facilities. Required facilities shall be free of charge.

[P] 2902.3.6 Door locking. Where a toilet room is provided for the use of multiple occupants, the egress door for the room shall not be lockable from the inside of the room. This section does not apply to family or assisted-use toilet rooms.

[W][P] 2902.4 Signage. Required public facilities shall be provided with signs that designate the sex as ((~~required by Section 2902.2~~)) for separate facilities or indicate gender-neutral facilities. Signs shall be readily visible and located near the entrance to each toilet facility. Signs for accessible toilet facilities shall comply with Section 1111.

[P] 2902.4.1 Directional signage. Directional signage indicating the route to the required public toilet facilities shall be posted in a lobby, corridor, aisle or similar space, such that the sign can be readily seen from the main entrance to the building or tenant space.

[S][P] 2902.5 Drinking fountain location. Drinking fountains shall not be required to be located in individual tenant spaces provided that public drinking fountains are located within a distance of travel of 500 feet (152 m) of the most remote location in the tenant space and not more than one story above or below the tenant space. Where the tenant space is in a covered or open mall, such distance shall not exceed 300 feet (91 440 mm). Drinking fountains shall be located on an accessible route. Drinking fountains shall not be located in toilet rooms.

[S] 2902.5.1 Drinking fountain number. Occupant loads over 30 shall have one drinking fountain for the first 150 occupants, then one per each additional 500 occupants.

Exceptions:

1. Sporting facilities with concessions serving drinks shall have one drinking fountain for each 1,000 occupants.
2. A drinking fountain need not be provided in a drinking or dining establishment.

[S] 2902.5.2 Multistory buildings. Drinking fountains shall be provided on each floor having more than 30 occupants in schools, dormitories, auditoriums, theaters, offices and public buildings.

[S] 2902.5.3 Penal institutions. Penal institutions shall have one drinking fountain on each cell block floor and one on each exercise floor.

[S] 2902.5.4 Bottle filling stations. *Bottle filling stations* shall be provided in accordance with Sections 2902.5.4.1 through 2902.5.4.3.

2902.5.4.1 Group E occupancies. In Group E occupancies with an occupant load over 30, a minimum of one *bottle filling station* shall be provided on each floor. This *bottle filling station* may be integral to a drinking fountain.

DRAFT

2902.5.4.2 Substitution. In all occupancies that require more than two drinking fountains per floor or secured area, *bottle filling stations* shall be permitted to be substituted for up to 50 percent of the required number of drinking fountains.

2902.5.4.3 Accessibility. At least one of the required *bottle filling stations* shall be located in accordance with Section 309 of ICC A117.1.

[S] 2902.6 Dwelling units. Dwelling units shall be provided with a kitchen sink.

[S] 2902.7 Water closet space requirements. The water closet stool in all occupancies shall be located in a clear space not less than 30 inches (762 mm) in width, with a clear space in front of the stool of not less than 24 inches (610 mm).

[S] 2902.8 Water. Each required sink, lavatory, bathtub and shower stall shall be equipped with hot and cold running water necessary for its normal operation.

[P] ((~~2902.6~~)) 2902.9 Small occupancies. Drinking fountains shall not be required for an occupant load of 15 or fewer.

DRAFT

CHAPTER 30

ELEVATORS AND CONVEYING SYSTEMS

Note: Chapter 30 is entirely Seattle amendments to the *International Building Code* and is not underlined.

SECTION 3001
PURPOSE

The purpose of this chapter is to protect persons, buildings and the contents thereof from hazards arising from the use of elevators, dumbwaiters, material lifts, escalators, moving walks and other conveyances by establishing minimum requirements regulating the design, construction, alteration, operation and maintenance of elevators, dumbwaiters, material lifts, escalators, moving walks and other conveyances, and by establishing procedures by which these requirements may be enforced.

SECTION 3002
SCOPE

3002.1 General. This code of safety standards covers the design, construction, installation, operation, inspection testing, maintenance, alteration and repair of elevators, dumbwaiters, material lifts, escalators, moving walks and other conveyances.

3002.2 Application to existing conveyances.

3002.2.1 Minimum standard for existing conveyances. All existing conveyances shall comply with Washington Administrative Code (WAC) Chapter 296-96 Part D as it existed on February 15, 2013 and with Section 3011 as minimum standards.

3002.2.2 Maintenance. All conveyances covered under this chapter, both existing and new, and all parts thereof shall be maintained in a safe condition. All devices and safeguards that are required by this chapter shall be maintained in good working order. All devices or safeguards that were required by a code in effect when the conveyance was installed, altered, or repaired shall be maintained in good working order. Maintenance shall comply with ASME A17.1 Section 8.6. The owner or the owner's designated agent is responsible for the maintenance of such equipment.

3002.2.3 Repairs and replacements. Repairs to existing conveyances and replacements of devices and components shall be made with parts of at least equivalent material, strength and design. They shall comply with WAC 296-96 Part D and ASME A17.1 Section 8.6.

3002.2.4 Additions and alterations. Additions and alterations are permitted to be made to the conveyance system of *existing buildings* or structures without making the entire system comply with all of the requirements of this chapter for new buildings or structures, provided the additions and alterations that are made comply with the requirements of this chapter for a new system, except as otherwise specifically provided in this code and in other applicable retroactive ordinances of the city.

Unless otherwise *approved* by the *building official*, alterations, repairs, replacements and maintenance of_conveyances shall comply with the requirements of ASME A17.1 Section 8.7. Where Section 8.7 refers to a requirement that has been amended by this chapter, the requirements of this chapter take precedence. Where Section 8.7 refers to ASME A17.3, the requirements of WAC 296-96 Part D apply. Alterations to existing material lifts shall conform with the requirements of WAC Chapter 296-96 Part C1 Material Lifts.

3002.2.5 Seismic improvements. The *building official* is authorized to promulgate rules to establish standards for seismic improvements to existing conveyances.

3002.2.6 Change of use. When the use of an existing freight elevator is changed to carrying of passengers, the elevator must comply with the retroactive requirements of this code, ASME A17.1, 2.16.4 and WAC 296-96 Part D for passenger elevators.

3002.2.7 Historic buildings and structures. See the *International Existing Building Code* for regulations regarding *historic buildings* or structures.

3002.3 References to the National Electrical Code. For the purpose of this chapter, all references in the ASME Code to the National Electrical Code include the Seattle Electrical Code. All electrical work shall be done in accordance with the requirements of the Seattle Electrical Code.

3002.4 Conflicts. In any case where the codes adopted by reference in Section 3003 conflict with the requirements of this chapter, this chapter controls.

DRAFT

SECTION 3003
CODES

3003.1 Seattle Elevator Code. The following are adopted by reference as part of the Seattle Building Code. They also constitute the Elevator Code of the City of Seattle.

1. Safety Code for Elevators and Escalators, ASME A17.1-2013, as amended in this ordinance and Appendices A through D, F through J, L, M and P through V.

   Exceptions:

   1.1. ASME A17.1 Sections 5.4, 5.5, 5.10, 5.11, and 5.12 are not adopted.

   1.2. ASME A17.1 Section 1.2.1, Purpose, is not adopted.

2. Safety Standard for Platform Lifts and Stairway Chairlifts, ASME A18.1-2011.
3. Standard for Elevator Suspension, Compensation, and Governor Systems, ASME A17.6-2010.

   Exception: ASME A17.6 Part 2 Aramid Fiber Ropes for Elevators, is not adopted.

4. Safety regulations for all elevators, dumbwaiters, escalators and other conveyances, Washington Administrative Code Chapter 296-96 as it existed on February 15, 2013.

   Exception: The following sections of WAC Chapter 296-96 are not part of the *Elevator Code of the City of Seattle*:

   1. Part B, Licenses and Fees for all Elevators, Dumbwaiters, Escalators, and Other Devices.
   2. Part B-1, Regulations and Fees for All Elevators, Dumbwaiters, Escalators and Other Conveyances
   3. Part C, Regulations for New and Altered Elevators and Lifting Devices, WAC 296-96-02400 through WAC 296-96-02420.
   4. Part C3, Construction, Operation, Maintenance and Inspection of Private Residence Conveyances for Transporting Property for Residential Use.
   5. Part C4, Temporary Hoists.
   6. Part C5, Additional Types of Conveyances.

3003.2 Licensing. All persons and firms working on conveyances in Seattle shall comply with chapter 70.87 RCW and chapter 296-96 WAC.

3003.3 Administrative rules. The *building official* is authorized to adopt by administrative rule, in accordance with Section 104.8, that furthers the intent and purpose of this code, that encourages the use of state of the art technology, materials or methods of construction, and which provides standards that are equal or better than those contained in this code.

DRAFT

SECTION 3004
DEFINITIONS

The following words and terms shall, for the purposes of this section and as used elsewhere in this code, have the meanings shown herein. These definitions are in addition to ASME A17.1 Section 1.3, RCW 70.87, Laws Governing Elevators and Other Lifting Devices, and Chapter 2 of this code.

ALTERATIONS, REPAIRS AND REPLACEMENTS. See ASME A17.1 Section 1.3.

AUTOMATIC ELEVATOR. A type of elevator that does not require an attendant. All calls are registered by the passengers.

AUTOMOBILE PARKING ELEVATOR. An elevator located in either a stationary or horizontally moving hoistway and used exclusively for parking automobiles where, during the parking process, each automobile is moved under its own power onto and off the elevator directly into parking spaces or cubicles in line with the elevator and where no persons are normally stationed on any level except the receiving level.

CONTROL ROOM. An enclosed control space outside the hoistway, intended for full bodily entry, that contains the motor controller. The room could also contain electrical or mechanical equipment used directly in connection with the elevator, dumbwaiter, or material lift but not the electric driving machine or the hydraulic machine.

CONTROL SPACE. A space outside the hoistway, intended to be accessed with or without full bodily entry, that contains the motor controller. This space could also contain electrical or mechanical equipment used directly in connection with the elevator, dumbwaiter, or material lift but not the electric driving machine or the hydraulic machine.

CONVEYANCE. An elevator, accessibility lift, escalator, dumbwaiter, material lift, automobile parking elevator, moving walk or other elevating device.

CONVEYANCES IN SERVICE. Units that are in operation, are inspected and certified by the *building official* for operation.

CONVEYANCES OUT OF SERVICE. The use of the unit has been prohibited either temporarily or permanently in accordance with Section 3005 below.

ELEVATOR GROUP. A grouping of elevators in a building located adjacent or directly across from one another that responds to common hall call buttons.

ENFORCING AUTHORITY. As used in ASME A17.1 means the *building official*.

EXISTING INSTALLATIONS. All conveyances that have been tested and approved for use by the *building official*.

INSPECTOR. Inspectors employed by the City of Seattle and working under the direction of the *building official*.

MACHINE ROOM. An enclosed machinery space outside the hoistway, intended for full bodily entry, that contains the electric driving machine or the hydraulic machine. The room could also contain the motor controller, and electrical and/or mechanical equipment used directly in connection with the elevator, dumbwaiter, or material lift.

MACHINERY SPACE. A space inside or outside the hoistway, intended to be accessed with or without full bodily entry, that contains elevator, dumbwaiter, or material lift mechanical equipment, and could also contain electrical equipment used directly in connection with the elevator, dumbwaiter, or material lift. This space could also contain the electric driving machine.

MATERIAL LIFT. A fixed, stationary conveyance that:

1. Has a car or platform that moves in guides;
2. Serves two or more floors or landings of a building or structure;
3. Has a vertical rise of at least 30 inches (762 mm) and no more than sixty feet (18 288 mm);
4. Has a maximum speed of fifty feet (15 240 mm) per minute;
5. Is an isolated, self-contained lift and is not a part of a conveying system;
6. Travels in an inclined or vertical, but not horizontal, direction;
7. Is operated only by, or under the direct supervision of, an individual designated by the employer; and
8. Is installed in a commercial or industrial area, and not in an area that is open to access by the general public.

DRAFT

SECTION 3005
AUTHORITY TO DISCONNECT UTILITIES, TAKE CONVEYANCES OUT OF SERVICE AND INVESTIGATE ACCIDENTS

3005.1 Disconnection of utilities. In addition to the provisions for Emergency Orders provided in Section 102, the *building official* is authorized to disconnect or order discontinuance of any utility service or energy supply to equipment regulated by this code in cases of emergency or where necessary for safety to life and property. Such utility service shall be discontinued until the equipment, appliances, devices or wiring found to be defective or defectively installed are replaced, repaired, or restored to a safe condition. Proper posting and seals shall be affixed to the equipment to prevent inadvertent use.

3005.2 Conveyances out of service. A conveyance shall be taken out of service temporarily after the *building official* has inspected the unit for proper parking of the car, securing the hoistway openings, and disconnection of power. A seal and tag shall be placed on the equipment to insure against unauthorized use. A conveyance is permitted to remain in a temporarily out-of-service status for a period not to exceed two years, after which time it shall be placed in a permanently out-of-service status.

Exception: Elevators that could be returned to service without repair are permitted to remain in a temporary out-of-service status with approval of the *building official*.

A conveyance shall be placed permanently out of service by landing the car and counterweights and removing the hoisting cables or fluid lines. Conveyances placed in a permanently out-of-service status shall have the hoistway sealed off for fire protection by securing existing doors.

Conveyances in an out-of-service status either temporarily or permanently are permitted to be placed back into service and classified as an existing installation unless determined to be hazardous by the *building official*. Requirements in effect at that time must be completed before certification and use. No installation or reconnection of hydraulic elevators powered by city water pressure is permitted.

3005.3 Report and investigation of accidents. The owner or the owner's authorized agent shall promptly notify the *building official* of each accident involving a conveyance that requires the service of a physician or results in a disability exceeding one day, and shall afford the *building official* every facility for investigating and inspecting the accident. The *building official* shall without delay, after being notified, make an inspection and shall place on file a full and complete report of the accident. The report shall give in detail all material facts and information available and the cause or causes, so far as they can be determined. The report shall be open to public inspection at all reasonable hours. If an accident involves the failure or destruction of any part of the construction or the operating mechanism of a conveyance, the use of the conveyance is forbidden until it has been made safe, it has been reinspected and any repairs, changes, or alterations have been *approved* by the department, and a permit has

been issued by the *building official*. The removal of any part of the damaged construction or operating mechanism from the premises is forbidden until the *building official* grants permission to do so.

SECTION 3006
INSTALLATION AND ALTERATION PERMITS

3006.1 Installation permits. A permit issued by the *building official* is required to install any elevator, escalator, dumbwaiter, automobile parking elevator, material lift moving walk, accessibility lifts or other conveyance. A separate permit shall be obtained for each conveyance installed regardless of location and/or contract arrangements.

3006.2 Alteration/repair permits. A permit is required to make any alterations to existing elevators, escalators, dumbwaiters, automobile parking elevators, material lifts, moving walks or other conveyances. A separate permit shall be obtained for each conveyance altered or relocated regardless of location and/or contract arrangements.

Exceptions:

1. Permits for repairs required by inspection reports are permitted to be combined for a single building.
2. The *building official* is permitted to issue a single permit for minor alterations to more than one conveyance that do not require individual retesting of each conveyance.
3. No permit shall be required for ordinary repairs made with parts of the same materials, strength and design normally necessary for maintenance.

3006.3 Temporary use permits. The *building official* is permitted to issue a temporary use permit for a period not to exceed 60 days to allow completion of installation and passing of the final inspection. Temporary use permits may be renewed by the *building official*. If, at any time during the period of temporary use, the *building official* determines that the building owner is not making adequate progress toward completion of the installation and passing of the final inspection, the *building official* is permitted to withdraw the temporary use permit on 7 days' notice. The *building official* is authorized to forbid further use of the conveyance until a certificate of inspection is obtained. If any conveyance is found to be *unsafe* or fails to comply with a notice of correction, the *building official* is authorized to revoke the temporary use permit.

3006.4 Expiration, renewal and revocation of permits. Sections 106.9 through 106.12 apply to permits required by this chapter.

DRAFT

SECTION 3007
PLANS AND SPECIFICATIONS

3007.1 Permit drawings. Two sets of drawings shall be submitted with applications for installations of new elevators, escalators, dumbwaiters, automobile parking elevators, material lifts, moving walks and other conveyances.

The drawings shall show beams, attachments, loads and reactions, and shall bear the seal of a structural engineer licensed under the laws of Washington State.

The *structural engineer in responsible charge* for the building shall review the drawings and forward them to the *building official* with a notation indicating that the drawings have been reviewed and been found to be in general conformance to the design of the building.

Exception: An engineer's stamp is not required for hydraulic elevators.

3007.2 Amendments to the permit. If changes to the *approved* work are made during construction, approval of the *building official* shall be obtained prior to execution. The inspector may approve minor changes for work that will not reduce the structural strength or fire and life safety of the structure. The inspector shall determine if it is necessary to revise the *approved construction documents.* No changes that are subject to special inspection required by Chapter 17 shall be made during construction unless approved by the *building official*. If revised plans are required, changes shall be shown on two sets of plans that shall be submitted to and approved by the *building official*, accompanied by fees specified in the *Fee Subtitle* prior to occupancy. All changes shall conform to the requirements of this code and other pertinent laws and ordinances and other issued permits.

SECTION 3008
REQUIRED INSTALLATION INSPECTIONS

3008.1 Installation inspections. It is the duty of the person doing the work authorized by a permit to notify the *building official* that such work is ready for inspection.

It is the duty of the person requesting any inspections required by this chapter to provide access to and means for proper inspection of such work.

Final inspection shall be called for by the applicant when the work described on the permit has been completed, and when ready for testing with weights and instruments, as needed. A final inspection is required after all wiring has been completed and all permanent fixtures such as switches, outlet receptacles, plates, lighting fixtures and all other equipment has been properly installed, and the hoistway, control rooms, machine rooms and machine spaces are properly completed.

SECTION 3009
CERTIFICATES OF INSPECTION AND OPERATION

3009.1 Certificates required. It is a violation of this code to operate any elevator, escalator, dumbwaiter, automobile parking elevator, material lift, moving walk or other conveyance without a certificate of inspection or authorization of temporary use issued by the *building official.* A certificate of inspection shall be issued following an inspection by the *building official* showing that the conveyance has been found to be in safe operating condition and applicable fees for inspection time, as set forth in the *Fee Subtitle*, have been paid. The certificate is valid until 45 days after the next inspection or until the certificate is withdrawn, whichever comes first.

If any conveyance is found to be *unsafe* or fails to comply with a notice of correction, the *building official* is authorized to withdraw the certificate of inspection.

3009.2 Periodic inspections. The *building official* shall cause inspections to be made of every conveyance at intervals of 12 months or as soon thereafter as is practical. The inspector shall file a full and correct report on each conveyance with the *building official* that shall note any code violations, corrections required and the general condition of the conveyance.

3009.3 Inspection report by building official. After each required inspection of a conveyance the *building official* shall mail a copy of the inspection report to the owner of the conveyance inspected. If inspection shows a conveyance to be in violation of the requirements of this chapter, the *building official* shall issue a notice in writing listing the corrections to be made to the conveyance that are necessary to bring it into compliance with this chapter and is authorized to order the operation thereof discontinued until the corrections are made. The owner upon receipt of inspection report shall complete all corrections within 90 days. The owner or owner's authorized agent shall notify the *building official* in writing when deficiencies are corrected.

3009.4 Inspections, tests and test reports. Reports of required tests shall be submitted to the owner and to the *building official* on forms furnished by the *building official*. Reports shall be submitted to the *building official* in writing within 60 days of completion of tests. Performance of required tests and their cost shall be the responsibility of the owner. Identification of conveyances shall be noted by use of assigned city numbers.

DRAFT

SECTION 3010
REQUIREMENTS FOR OPERATION AND MAINTENANCE

3010.1 Responsibility for operation and maintenance. The owner is responsible for the safe operation and maintenance of each device regulated by this chapter. The installation of pipes, ducts, conduits, wiring and the storage of materials not required for the operation of the elevator is prohibited in hoistways, control rooms, machine rooms and machine spaces. See Section 3022. Sidewalk elevators in public places are also subject to the requirements of Title 15, Seattle Municipal Code, Street and Sidewalk Use, as amended. See Part 8 of ASME A17.1 for requirements for operation and maintenance.

SECTION 3011
RETROACTIVE REQUIREMENTS FOR EXISTING INSTALLATIONS

3011.1 General. Existing conveyances shall be made to comply with WAC 296-96 Part D, Regulations for Existing Elevators, Dumbwaiters, and Escalators and the provisions of this section.

3011.2 Doors to elevator and dumbwaiter machine rooms. Doors to elevator and dumbwaiter machine rooms, control rooms and machinery spaces shall be self-closing and self-locking. The lock shall be a spring-type lock arranged to permit the door to be opened from the inside without a key, incapable of being left in the unlocked position, and accessible only by a key from the outside.

3011.3 Key retainer box. The key retainer box shall comply with Section 3011.3.1 or 3011.3.2.

3011.3.1 Conveyances installed between March 1, 1956 and August 14, 2004. A key retainer box locked and keyed to the standard City access key for elevator access and operation keys shall be provided. The key retainer box shall meet the following standards:

1. Dimensions – 8 inches high, 6 inches wide, 1 inch deep.
2. Material – 16 gauge steel welded.
3. Color – red (unless located in the main lobby above the hall call button, 6 feet nominal above the floor).
4. Labeling – "FOR FIRE DEPARTMENT USE."

5. Lock – Ace one-inch cylinder cam lock key #39504.

The key retainer box is to be installed at the designated recall floor above the Phase I recall switch or in the main lobby above the hall call button when no recall feature exists. The key retainer box is to be mounted 6 feet nominal above the floor. The *building official* is permitted to approve other locations upon request.

Key retainer boxes are permitted to comply with Section 3011.3.2 or 3016.9 as an alternative to complying with this section.

3011.3.2 Conveyances installed between August 15, 2004 and November 5, 2016. A key retainer box locked and keyed to the secure city access key for elevator and other conveyance access and operation keys shall be provided. The key retainer box shall meet the following standards:

1. Minimum dimensions – 6 1/2 inches high, 6 inches wide, 2 inches deep.
2. Material – at least 16 gauge steel welded.
3. Color – red (unless located in the main lobby above the hall call button, 6 feet above the floor).
4. Labeling – "For Emergency Use."
5. Lock – high security Medeco lock specified by the *building official*. Use of the key shall be restricted to fire, emergency response, and elevator inspection personnel.

The key retainer box shall be flush or surface mounted, installed at the designated recall floor above the Phase I recall switch or in the main lobby above the hall call button if no recall feature exists. The key retainer box is to be mounted approximately 6 feet above the floor. The key retainer box shall be attached to the building so as to be able to withstand a force of 300 lbf/square foot applied horizontally at any point. In buildings with more than one elevator, the key retainer box shall be large enough to accommodate all required keys. The building official may approve other locations and custom box types upon request.

Key retainer boxes are permitted to comply with Section 3016.9 as an alternative to complying with this section.

3011.4 Elevator access keys. Keys for access to and for the operation of elevating equipment shall be tagged and retained in the key retainer box. The key retainer box shall contain fire emergency service keys (Phase I and II, one key for each switch) and keys for any of the following that are in the building:

1. Doors to the control room, machine room and machine space;
2. Secondary level door;
3. Pit door;
4. Roof door;
5. Independent, hospital emergency and/or attendant operation;
6. Hoistway access;
7. Mechanical hoistway access devices (broken arm, lunar, etc.);
8. Miscellaneous switches with locks;
9. Fire alarm panel room;
10. Sprinkler valve control room.

3011.5 Dumbwaiter machinery access. Access doors to dumbwaiter machinery spaces shall be provided with electric contacts and labeled on the exterior side "DANGER – DUMBWAITER MACHINE" in one-inch letters.

3011.6 Machine space lighting and receptacles. Permanent electric lighting shall be provided in all control rooms, machine rooms and machinery spaces. The illumination shall be not less than 10 foot-candles (108 lux) at the floor level. The lighting control switch shall be located within easy reach of the access to the room or space. Where practicable, the light control switch shall be located on the lock-jamb side of the access door. Where practical, elevator pits, control rooms, machine rooms and machine spaces shall be provided with an electrical receptacle.

3011.7 Access to terminal landings. Mechanical access to terminal landings of elevator hoistways shall be provided in accordance with WAC 296-96-23162 (1).

3011.8 Wall covering material for passenger cars. All materials exposed to the car interior and the hoistway shall be metal or shall conform to the following:

(1) Materials in their end use configuration, other than those covered by paragraph (2) below, shall conform to the following requirements, based on the tests conducted in accordance with the requirements of ASTM E 84, ANSI/UL 723 or NFPA 252:

(a) Flame spread rating of 0 to 75;

DRAFT

(b) Smoke development of 0 to 450.

(2) Napped, tufted, wove, looped, and similar materials in their end use configuration on car enclosure walls shall have a flame spread rating of 0 to 25.

(3) Padded protective linings, for temporary use in passenger cars during the handling of freight, shall be of materials conforming to either paragraph (1) or (2) above. The protective lining shall clear the floor by not less than 4 inches (102 mm).

(4) Floor covering, underlayment, and its adhesive shall have a critical radiant flux of not less than 0.45 W/cm^2 as measured by ASTM E 648. Floor finish materials of a traditional type such as wood, vinyl, linoleum and terrazzo are permitted to be used.

Exception: Handrails, operating devices, ventilating devices, signal fixtures, audio and visual communication devices, and their housings are not required to comply with this Section 3011.8.

3011.9 Control and operating circuits and overcurrent protection. Overcurrent protection shall be maintained in accordance with *1984 National Electrical Code* Section 620-61.

3011.9.1 Control and operating circuits.

3011.9.1.1 Electric elevators.

1. For electric elevators, the normal and final terminal stopping device shall not control the same controller switches unless two or more separate and independent switches are provided, two of which shall be closed to complete the driving-machine motor-and-brake circuit in either direction of travel. Where a two- or three-phase alternating current driving-machine motor is used, these switches shall be of the multipole type.

   The control shall be so designed and installed that a single ground or short circuit may permit either, but not prevent both, the normal and final stopping device circuits from stopping the car.

2. In the design and installation of the control and operating circuits in electric elevators, the following requirements shall be met:

   a. If springs are used to actuate switches, contactors or relays to break the circuit to stop an elevator at the terminal landings, they shall be of the compression type.

   b. The completion or maintenance of an electric circuit shall not be used to interrupt the power to the elevator driving-machine motor or brake at the terminal landings, nor to stop the car when the emergency stop switch is opened or any of the electrical protective devices operate.

      Exception: The requirements of this rule do not apply to dynamic braking, nor to speed control switches.

   c. The failure of any single magnetically operated switch, contactor or relay to release in the intended manner, or the failure of any static control device to operate as intended, or the occurrence of a single accidental ground, shall not permit the car to start or run if any hoistway door interlock is unlocked or if any hoistway door or car door or gate electric contact is not in the closed position.

   d. If generator-field control is used, means shall be provided to prevent the generator from building up and applying sufficient current to the elevator driving-machine motor to move the car if the elevator motor control switches are in the “OFF” position. The means used shall not interfere with maintenance of an effective dynamic-braking circuit during stopping and standstill conditions.

   e. The control circuits shall be so designed and installed that the car speed in the down direction with rated load in the car, under normal operating conditions with the power supply on or off does not exceed governor tripping speed or 125 percent of rated speed, whichever is less.

3. Elevators with driving motors employing static control without motor generator sets shall conform to the following requirements:

   a. Two devices shall be provided to remove power independently from the driving-machine motor. At least one device shall be an electromechanical contactor.

   b. The contactor shall be arranged to open each time the car stops.

   c. The contactor shall open the driving-machine brake circuit.

   d. An additional contactor shall be provided to also open the driving-machine brake circuit. This contactor is not required to have contacts in the driving-machine motor circuit.

   e. The electrical protective devices required by Rule 210.2 of ASME A17.1d-1986 shall control the solid state device and both contactors.

      Exception: Leveling can take place with power opening of doors and gates as restricted by the requirements of Rules 112.2a(1) and 112.2b(1) of ASME A17.1d-1986.

DRAFT

f. After each elevator stop, the car shall not respond to a signal to start unless both contactors are in the de-energized position.

Exception: Elevators employing alternating-current hoist motors driven from a direct-current source through a static inverter.

4. Elevators employing alternating-current driving motors driven from a direct-current power source through a static inverter shall conform to the following requirements:

a. Two separate means shall be provided to independently inhibit the flow of alternating current through the solid state devices that connect the direct-current power source to the alternating-current driving motor. At least one of the means shall be an electromechanical relay.

b. The relay shall be arranged to open each time the car stops.

c. The relay shall cause the driving-machine brake circuit to open.

d. An additional contactor shall be provided to also open the driving-machine brake circuit. This contactor is not required to have contacts in the driving-machine motor circuit.

e. The electrical protective devices required by Rule 210.2 of ASME A17.1d-1986 shall control both the means that inhibit the flow of alternating current through the solid state devices and the contactors in the brake circuit.

Exception: Leveling can take place with power opening of the doors and gates as restricted by the requirements of Rules 112.2a(1) and 112.2b(1) of ASME A17.1d-1986.

f. After each elevator stop, the car shall not respond to a signal to start unless the relay that inhibits the flow of alternating current through the solid state devices, and the contactors in the brake circuit, are in the de-energized position.

3011.9.1.2 Hydraulic elevators. The design and installation of the control and operating circuits for hydraulic elevators shall conform to the following requirements:

a. Springs, where used to actuate switches, contactors or relays to stop an elevator at the terminals or to actuate electrically operated valves, shall be of the compression type.

b. The completion or maintenance of an electric circuit shall not be used to interrupt the power to control-valve-operating magnets nor to the pump driving motor of electro-hydraulic elevators under the following conditions:

1. To stop the car at the terminals.

2. To stop the car when the emergency-stop switch or any of the electrical protective devices operate.

c. The failure of any single magnetically operated switch, contactor or relay to release in the intended manner or the occurrence of a single accidental ground shall not permit the car to start or run if any hoistway door interlock is unlocked or if any hoistway-door or car-door or gate contact is not in the closed position.

3011.10 Roped hydraulic elevators. Roped horizontal hydraulic elevators are permitted to continue in service but once taken out of service shall not be reactivated.

3011.11 Pit Access and equipment. Access ladders shall be installed in elevator pits deeper than 3 feet.

Pits shall be illuminated by a permanent luminaire that provides not less than 5 foot-candles (54 lux) of illumination at the pit floor. Light bulbs shall be externally guarded to prevent contact and accidental breakage.

Pit light control switches shall be located inside the hoistway of every elevator approximately 48 inches above the threshold, and either within 18 inches of the access door or within reach from the access floor and adjacent to the pit ladder if provided.

Access shall be provided for safe maintenance and inspection of all equipment located in the pit.

3011.12 Floor numbers. Elevator hoistways shall have floor numbers not less than 2 inches in height, placed on the walls and/or doors of hoistways at intervals such that a person in a stalled elevator upon opening the car door could determine the floor position.

3011.13 Car top work light. A permanently wired work light and outlet shall be installed on top of freight and passenger elevators to provide adequate illumination for inspection and work in the hoistway. The light shall be provided with a non-keyed switch in or adjacent to the fixture. The fixture shall be protected from accidental breakage.

3011.14 Labeling. All equipment (disconnect switches, machines and controllers) operating on a voltage in excess of 250 volts shall be labeled for the voltage used in letters 3/4 inches high.

3011.15 Interior alterations. Alterations or modifications of elevator car interiors shall comply with ASME A17.1, 8.7.2.15.2 (increase or decrease in deadweight of car), Building Code requirements concerning flame spread ratings for wall coverings (See Chapter 8), and lighting requirements of ASME A17.1.

DRAFT

3011.16 Illumination. Illumination in the elevator car shall be maintained unless it is turned off manually by the switch in the car. A readily-accessible and labeled toggle-type test switch shall be provided on the top of the car to cut lighting power manually and test the emergency lighting.

3011.17 Conveyance number designation. In any building with more than one elevator, escalator or other type of conveyance a designating number (not less than two inches in height) shall be located at the door of the main entrance lobby, inside the car, on the machine, on the disconnect switch or stop switch, and on escalator upper and lower front plates.

3011.18 Escalator starting switches. "Up" and "Down" positions shall be clearly indicated on all starting switches.

3011.19 Anchorage for elevator equipment. All elevator equipment, hydraulic or cable type shall be anchored.

3011.20 Restricted opening of doors. All existing passenger elevators in Group R-1 hotels and dormitory buildings shall comply with the following.

1. When a car is outside the unlocking zone, the hoistway doors or car doors shall be so arranged that the hoistway doors or car doors cannot be opened more than 4 inches (102 mm) from inside the car.
2. When the car doors are so arranged that they cannot be opened when the car is outside the unlocking zone, the car doors shall be openable from outside the car without the use of special tools.
3. The doors shall be unlocked when the car is within 3 inches (76 mm) above or below the landing and are permitted to be configured to be unlocked up to 18 inches (457 mm) above or below the landing.

SECTION 3012
RETROACTIVE REQUIREMENTS FOR EXISTING MATERIAL LIFTS

3012.1 General. Existing material lifts shall be made to comply with the following requirements. (Note: New material lifts shall comply with Section 3013).

3012.2 Hoistway enclosure gates and doors. The openings at each material lift landing shall have gates or doors that guard the full width of the opening. A hoistway door shall be vertically sliding, bi-parting, counter-balanced, or horizontally swinging or sliding. Gates and doors shall meet the following requirements:

1. A balanced-type, vertically sliding hoistway gate shall extend from not more than 2 inches from the landing threshold to not less than 66 inches above the landing threshold.
2. A gate shall be solid or openwork of a design that will reject a ball 2 inches in diameter. A gate shall be located so that the distance from the hoistway face of the gate to the hoistway edge of the landing sill is not more than 2-1/2 inches. A gate shall be designed and guided so that it will withstand a lateral pressure of one hundred pounds applied at approximately its center without breaking or being permanently deformed and without displacing the gate from its guides or tracks.
3. Hoistway gates or doors shall have a combination mechanical lock and electric contact, which shall prevent operation of the material lift by the normal operating devices unless the door or gate is closed.

3012.3 Controls.

1. The control station shall be remotely mounted so that it is inaccessible from the material lift car.
2. Controls shall be clearly marked or labeled to indicate the function of control.
3. All control stations shall have a stop switch. When opened, the stop switch shall remove the electrical power from the driving machine and brake. The stop switch shall:
   - 3.1 Be manually operated;
   - 3.2 Have red operating handles or buttons;
   - 3.3 Be conspicuously and permanently marked "STOP";
   - 3.4 Indicate the stop and run positions; and
   - 3.5 Be arranged to be locked in the open position.

3012.4 Capacity posting and no-riders sign. Each material lift shall have a capacity sign permanently and securely fastened in place in the material lift car and on the landings. The sign shall indicate the rated load of the material lift in pounds. The sign shall be metal with black letters two inches high on yellow background.

A sign stating "NO PERSONS PERMITTED TO RIDE THIS DEVICE" shall be conspicuously and securely posted on the landing side of all hoistway gates and doors and in the enclosure of each material lift car. The sign shall be metal with black letters 2 inches high on red background.

DRAFT

SECTION 3013
REQUIREMENTS FOR NEW MATERIAL LIFTS

3013.1 New material lifts. New material lifts shall comply with ASME A17.1, Sections 2.7, 2.8 and 3.7. WAC 296-96 Part C1, Minimum Standards for All Material Lifts, as it existed on February 15, 2013, applies to all material lifts as defined in Section 3004.

SECTION 3014
EMERGENCY SERVICE FOR ELEVATORS IN EXISTING BUILDINGS – PHASE I RECALL

3014.1 General. All existing elevators requiring Phase I recall when installed or under Chapter 93 of the *Seattle Fire Code* shall comply with this section.

Exceptions:

1. Elevators that comply with the standards for new installations provided in Section 3018;
2. Elevators with less than 25 feet of travel if the *building official* and the *fire code official* give written approval; and
3. Elevators that comply with ASME A17.1, Rule 211.3a 1984 edition or later and Sections 3014.10 and 3014.11.

3014.2 Phase I recall keyed switch. A three-position ("on," "off" and "by-pass") key cylinder switch shall be provided at each designated level within easy line of sight of the elevator controlled by the switch. If additional switches are provided in a central control station they shall be two position ("off" and "on") key-operated switches.

3014.3 Keyed cylinder-type switches. Keyed cylinder-type switches shall comply with the following:

1. Keys shall be removable only in the emergency ("on") and normal ("off") positions. Keys shall not be removable in the by-pass position.
2. One key shall be provided for each Phase I switch or key cylinder.
3. All emergency operation cylinders (Phases I and II) shall be keyed alike but such key shall not be a part of a building master key system.

3014.4 Key location.

1. A key box meeting the standards of Section 3011.3 shall be provided at the designated recall floor above the Phase I recall switch. The key box is to be mounted approximately 6 feet above the floor. The *building official* is permitted to approve other locations upon request.
2. When a central control station is provided, an additional set of keys shall be provided and hung in the control station in a location designated by the fire chief. The keys shall be identified by a ring or paddle.

3014.5 Key switch functions.

1. The three positions of the switch shall be marked "by-pass," "off" and "on."
2. If the switch is in the "off" position, normal elevator service shall be provided and smoke detectors, if required, shall be functional.
3. If the switch is in the "by-pass" position, normal elevator service shall be restored independent of any required smoke detectors.
4. If the switch is in the "on" position, the elevators are in Phase I elevator recall mode.

3014.6 Phase I automatic recall operation. If the Phase I recall switch is in the emergency ("on") position:

1. All cars controlled by this switch that are on automatic service shall return nonstop to the designated level and power-operated doors shall open and remain open.
2. A car traveling away from the designated level shall reverse at or before the next available floor without opening its doors.
3. A car stopped at a landing shall have the in-car emergency stop switch or in-car stop switch rendered inoperative as soon as the doors are closed and the car starts toward the designated level. A moving car, traveling to or away from the designated level, shall have the in-car emergency stop or in-car stop switch rendered inoperative immediately.
4. A car standing at a floor other than the designated level, with doors open and in-car emergency stop switch or in-car stop switch in the run position, shall conform to the following:

   4.1 Elevators having automatic power-operated horizontally sliding doors shall close the doors without delay and proceed to the designated level;

   4.2 Elevators having power-operated vertically sliding doors provided with automatic or momentary pressure closing operation in accordance with ASME A17.1 Rule 112.3d 1984 or later edition shall have the closing sequence initiated

DRAFT

without delay in accordance with ASME A17.1 Rule 112.3d (1), (2), (3), and (5) 1984 or later edition, and the car shall proceed to the designated level;

4.3 Elevators having power-operated doors provided with continuous pressure closing operation per ASME A17.1 Rule 112.3b 1984 or later edition or elevators having manual doors shall conform to the requirements of Section 3014.7. Sequence operation, if provided, shall remain effective.

5. Door reopening devices for power-operated doors that are sensitive to smoke or flame shall be rendered inoperative. Mechanically actuated door reopening devices not sensitive to smoke or flame shall remain operative. Car door open buttons shall remain operative. Door closing shall conform to the requirements of ASME A17.1 Rule 112.5 1984 or later edition. Door hold open switches shall be rendered inoperative.
6. All car and corridor call buttons and all corridor door opening and closing buttons shall be rendered inoperative. All call register lights and directional lanterns shall be extinguished and remain inoperative. Position indicators, if provided, shall remain in service. All prior registered calls shall be canceled.
7. The activation of a smoke detector installed in accordance with Article 93 of the *Seattle Fire Code* in any elevator lobby or associated elevator machine room, other than the designated level, shall cause all cars in all groups that serve that lobby to return nonstop to the designated level. The *fire code official* is permitted to approve the connection of other detection devices to activate recall. The operation shall conform to the requirements of Phase I emergency recall operation. Whenever new elevator controllers are installed, they shall meet all provisions of the then current building and elevator codes. Newly-installed controllers shall have the capability of selecting alternate recall floors.

3014.7 Attendant-operated recall operation. Attendant-operated elevators shall be provided with visible and audible signals that alert the operator to return to the lobby when the car has been recalled under Phase I control.

3014.8 Dual recall operation. Elevators arranged for dual operation shall conform to all requirements for automatic operation and attendant operation as applicable.

3014.9 Inspection/maintenance recall operation. During inspection operation the audible and visible signals required in Section 3014.7 will be actuated when the car has been recalled under Phase I control. The car shall remain under the control of the operator and/or car top station until the car is returned to service.

3014.10 Nurses' preemption. Nurses' preemption (hospital service) is permitted to commandeer up to one-half of the cars in a particular bank of elevators. At least one-half of the cars shall respond to Phase I and all cars not preempted shall respond.

3014.11 Operation instruction. Instructions for operation of elevators under Phase I shall be incorporated with or adjacent to the Phase I switch at the designated level. Instructions for operation of elevators under Phase II shall be incorporated with or adjacent to the switch, in or adjacent to the operating panel in each car. In addition, Phase I operating instructions shall be adjacent to the Phase I switch in the fire control center and other *approved* locations.

Instructions shall be in letters not less than 1/8 inch (3.2 mm) in height and shall be permanently installed and protected against removal or defacement.

3014.12 Latching. All cars responding to Phase I Recall, activated by a smoke detector or other *approved* detection device, shall return to the appropriate recall floor as determined by the first detector recall signal received. No device other than the Phase I switch is permitted to override the first recall signal received. A later detection signal shall not change the recall floor. Smoke detector activation shall only be reset manually.

DRAFT

SECTION 3015
EMERGENCY SERVICE FOR ELEVATORS IN EXISTING BUILDINGS – PHASE II HIGH RISE IN-CAR OPERATION

3015.1 General. Existing elevators in buildings having floors used for human occupancy located more than 75 feet above the lowest level of fire department vehicle access, or buildings having floors used for human occupancy 35 feet above grade, which lack fire department vehicle access to at least one side shall have Phase II in-car operation and shall comply with this section.

Exceptions:

1. Elevators that comply with the standards for new installations as provided in Section 3019;
2. Elevators with less than 25 feet of travel when the *building official* and *fire code official* give written approval; and
3. Elevators that comply with ASME A17.1 Rule 211.3c 1984 or later edition.

3015.2 Phase II in-car operation key switch.

1. A two-position ("off" and "on") key cylinder switch shall be provided in each elevator car.
2. The switch shall become effective only when the designated level Phase I switch is in the "on" position or a smoke detector has been activated and the car has returned to the designated level. The "on" position shall place the elevator in Phase II in-car operation.

3. The elevator shall be removed from Phase II operation only by moving the switch to the “off” position with the car at the designated level.
4. The switch shall be operable by the Phase I key and such key shall not be part of a building’s master key system.
5. The key shall be removable only in the “off” position.
6. One key shall be provided for each Phase II switch or key cylinder.

3015.3 Key location. See Section 3014.4 for the location of the keys.

3015.4 Designated operator. The operation of elevators on Phase II emergency in-car operation shall be by trained emergency service personnel only.

3015.5 Car operation only. An elevator shall be operable only by a person in the car.

3015.6 Corridor call buttons and directional lanterns. All corridor call buttons and directional lanterns shall remain inoperative.

3015.7 Car and Hoistway Door Operation. The operation of car and hoistway doors shall comply with the following:

1. The opening of power-operated doors shall be controlled only by constant-pressure open buttons or switches.
2. If the constant-pressure open button or switch is released prior to the doors reaching the fully open position, the doors shall automatically reclose. Once doors are fully open, they shall remain open until signaled to close.
3. The closing of power-operated doors shall be by constant pressure of either the call button or door-close button. If a door-close button is supplied, it shall be operable.
4. If the constant-pressure close button or car call button is released prior to the doors reaching the fully closed position, the doors shall automatically reopen. Once doors are fully closed, they shall remain closed until signaled to open.

Exception: Momentary pressure control of doors using the sill trip-type operator may be permitted as existing; however, the doors must not open automatically upon arrival at a floor.

3015.8 Door reopening devices. Smoke-sensitive door reopening devices and door hold-open switches shall be rendered inoperative. Non-smoke-sensitive door reopening devices required to be operative under all other conditions may be rendered inoperative under Phase II in-car operation only if the doors are closed by constant pressure.

3015.9 Car call cancellation. All registered calls shall cancel at the first stop.

3015.10 Direction of travel. Direction of travel and start shall be by the car call buttons. With doors in the closed position, actuation of the car call button shall select the floor, and start the car to the selected floor. If no door-close button is available, constant pressure of the car call button shall select the floor, close the door, and start the car to the selected floor.

Exception: On proximity-type car call buttons or any other type subject to false firing (calls being placed by line spikes, intermittent loss of power, etc.), the doors shall be closed by a door-close button. Floors may be selected either before or after closing of the doors. The car will start only on the call button or door close button depending on which is the last device to be actuated.

3015.11 Motor generator time out. The motor generator shall not time out automatically.

3015.12 Car position indicators. The car position indicators, when provided, shall be operative.

3015.13 Phase II priority. Phase II operation shall override any floor calls keyed out for security reasons. Floor selection buttons shall be provided in the car to permit travel to all floors served by the car. Means that prevent the operation of these buttons shall be rendered inoperative.

3015.14 False starts. The elevator shall not start if no calls registered.

3015.15 Terminal runs. The elevator shall not make unprogrammed terminal runs.

3015.16 Loss of power. Elevators on fire emergency Phase II car operation shall remain in their respective locations and in Phase II mode upon loss of power. They shall not move unless the elevator is under the control of the operator and power has been restored.

SECTION 3016
NEW INSTALLATIONS – CONSTRUCTION STANDARDS

3016.1 General. All new elevators, escalators, moving walks, dumbwaiters and other conveyances and their installation shall conform to the requirements of ASME A17.1 as amended by this chapter.

3016.2 Wall covering material for passenger cars. Wall covering material for passenger cars shall comply with the following:

1. ASME A17.1 Section 2.14.

DRAFT

2. *Seattle Building Code* requirements concerning flame spread ratings for wall coverings and use of plastics. (See Chapter 8.)
3. WAC 296-96-23216 as it existed on February 15, 2013, except that interior finish materials need not be firmly bonded flat to the enclosure and are permitted to be padded.

3016.3 Seismic considerations. New installations shall comply with ASME A17.1 Section 8.4. The provisions for Seismic Zone 3 shall apply.

3016.4 Requirements to accommodate people with disabilities. All new elevators shall comply with Chapter 11. In addition, WAC 296-96-02425 through 296-96-02605 applies as those sections existed on February 15, 2013.

3016.5 Hoistway pressurization. The requirements of Section 3016.5 apply in addition to ASME A17.1, 2.1.4 and Section 713.14.

1. When pressurization is installed in elevator hoistways, the pressurization of the hoistway shall be measured with all elevator systems in recall mode, Phase I, and all cars at the designated recall level with the doors in the open position.
2. Activation of the fan serving the hoistway pressurization system may be delayed by up to 30 seconds so that elevator recall can be initiated prior to pressurizing the hoistway.
3. Unless specifically installed to serve that space only, environmental air systems and pressurization systems shall not be located in hoistways, elevator mechanical rooms and elevator machinery spaces.

   Exceptions:

   1. Pressurization ducts serving a hoistway that are separated from the room or space by construction equal to the rated construction of the room or space and so located that all required clearances are maintained.
   2. Pressurization duct openings, dampers and grilles are permitted to be located in hoistway shaft walls if the pressurization air does not impair the operation of the elevator.
4. Hoistways shall not be pressurized through pressurization of elevator control rooms or machine rooms. The machine room floor between the hoistway and overhead control rooms or machine room shall contain as few penetrations as possible. All penetrations for cable drops, etc., shall be held to a minimum size.
5. Elevator doors shall operate properly when hoistway pressurization is in effect.
6. Ventilation louver operating motors shall not infringe on any elevator machinery or controller working clearances.

3016.6 Elevator operation on emergency power. All elevators required to be supplied with emergency power shall comply with the following:

1. Each elevator shall be transferable to the emergency power supply system.
2. Emergency power supply systems capable of handling all elevators on the premises need no sequencing or switching other than the possibility of staggering the restarting of the generators.
3. Emergency power supply systems whose capacity can only handle one elevator of a duplex or one elevator in each elevator group shall comply with the following.

   3.1 All elevators on automatic operation shall be automatically assigned emergency power in sequence and returned to the Phase I recall or lobby floor, where they shall open their doors and then time out of service.

   3.2 The last car down will generally be the selected car of a duplex or an elevator group to remain in service. The service shall continue to be automatic.

   3.3 The assignment of emergency power will skip or rotate past cars that are out of service (emergency stop switch pulled, malfunction, car top operation, etc.). If assignment is made to a manual or attendant-operated car and the car is unattended, the system shall rotate past the car as though it is out of service.
4. The lights for the car, control room, machine room and machine space shall be activated on the emergency system.
5. A manual emergency power assignment switch or switches shall be in an elevator status panel located in the fire department central control station. Each elevator shall be capable of being assigned emergency power from this location. The manual switching shall be effective at all times other than when the cars are automatically sequencing to the lobby or when the selected car is traveling. The switch shall not remove power in midflight or with doors closed.
6. Elevators on Phase II car operation shall remain in their respective locations upon loss of power. They shall remain in Phase II mode and shall not move unless the elevator is under the control of the operator and normal power has been restored or emergency power has been assigned to the car by either automatic or manual means.
7. Loss of power and initiation of emergency power immediately after Phase I recall operation has occurred shall not cause any cars to be stranded in the building. Upon the application of emergency power to the equipment, the cars shall follow the normal sequencing to the lobby, open their doors and time out of service. When all cars have been bypassed (out of

DRAFT

service) or returned to the lobby, the assigned car shall then become available for firefighter's use on Phase II in-car operation.

8. Each elevator operating on emergency power shall be tested in accordance with applicable ASME A17.1a-2013, 2.16.8, 2.26.10 and 2.27.2, and ASME A17.2-2014, Part 6.
9. If the elevator cars are recalled to the alternate floor by Phase I recall and a loss of power occurs, the cars shall be sequenced to the alternate floor upon assignment of emergency power. The cars shall not go to the primary designated recall floor under these conditions. The alternate floor shall be provided with a means of identifying the elevator that is supplied with emergency power.
10. The elevator position indicator system, if provided, shall not become disoriented due to the loss of power or any other reason. However, upon the resumption of power, the car may move to reestablish absolute car position.
11. Communications to the car shall remain in service.

3016.7 Multiple hoistways. The number of elevators permissible in a hoistway is as follows. See ASME A17.1, 2.1.1.4.

1. No more than four elevators shall be in a single hoistway.
2. No more than three elevators serving all or the same portion of a building are permitted to be in a single hoistway.

   Exception: Four elevators serving all or the same portions of a building are permitted to be in a common hoistway under the following conditions:

   1. The hoistway is pressurized; and
   2. Emergency generator power is available to serve both the elevators and pressurization equipment.

3016.8 Additional doors. Doors other than the hoistway door and the elevator car door are prohibited at the point of access to an elevator car.

Exception: Doors that are readily openable from the car side without a key, tool, or special knowledge or effort.

3016.9 Knox box 1400 series key retainer box. A key retainer box that meets the requirements of this section shall be provided.

1. The box shall be locked and keyed to the secure city access key for elevator and other conveyance access and operation keys.
2. The box shall be located at the designated recall floor above the Phase I recall switch or in the main lobby above the hall call button if no recall feature exists.
3. The box shall be flush or surface mounted approximately 6 feet above the floor.
4. The box shall be attached to the building so as to be able to withstand a force of 300 psf applied horizontally at any point.
5. The box shall be large enough to accommodate all required keys.
6. The box shall be labeled "For Emergency Use."
7. The lock shall be high security Medeco lock specified by the *building official*.
8. The *building official* may approve other locations and custom box types upon request.

3016.10 Elevator access keys. Keys for access to and for the operation of elevator and other conveyance equipment shall tagged and retained in the key retainer box. The key retainer box shall contain fire emergency service keys (Phase I and II, one key for each switch) and keys to all of the following that are in the building:

1. Doors to the control room, machine room and machine space;
2. Doors preceding elevator control room, machine room, and machine space;
3. Secondary level door;
4. Pit door;
5. Roof door;
6. Independent, hospital emergency and attendant operation;
7. Hoistway access;
8. Mechanical hoistway access devices (broken arm, lunar, etc.);
9. Lighting and fan;
10. Fob or card reader for secured car calls and or hall call buttons;
11. Miscellaneous switch keys;
12. Fire alarm panel room;

DRAFT

13. Sprinkler valve control; room;
14. Fire command center;
15. Elevator central control station/panel.

3016.11 Escalator and moving walk conveyance number designation. In any building with more than one escalator or moving walk, a designating number (not less than two inches in height) shall be located on the upper and lower front plates.

[W] 3016.12 Elevator car to accommodate ambulance stretcher. In buildings provided with an elevator, at least one elevator shall provide fire department emergency access to all floors served in:

1. Buildings four or more *stories* above or below *grade plane*, and
2. Any R-1, R-2 or I occupancy building regardless of the number of *stories*.

The elevator car shall be of a size and arrangement to accommodate a 24-inch by 84-inch (610 mm by 2134 mm) ambulance stretcher with not less than 5-inch (127 mm) radius corners, in the horizontal, open position. The elevator shall be identified by the international symbol for emergency medical services (star of life). The symbol shall not be less than 3 inches (76 mm) in height and shall be placed inside on both sides of the hoistway door frame on both the designated level and the alternate level.

Exception: Private residence elevators are not required to comply with this section.

Note: The stretcher-sized elevator car may also serve as an *accessible means of egress* as required by Section 1009.2.1 of the *Seattle Building Code*.

3016.13 Signs. A sign complying with ASME A17.1 2.27.9 shall be posted in the elevator lobby of every elevator equipped for firefighters' emergency operation. The signs shall be located above each hall call fixture noting that the elevators will be recalled to the building lobby on fire alarm.

Exception: If *approved* by the *building official*, signs need not be posted in lobbies at the main egress level if the means of egress are obviously identifiable.

A sign indicating the number or alphabet of each elevator shall be posted and maintained in the elevator lobby at the designated recall level and at alternate recall floors, if provided.

3016.14 Fire service access elevators and occupant evacuation elevators. See Section 403 and ASME A17.1 for provisions related to fire service access elevators and occupant evacuation elevators.

3016.15 Energy efficiency. Elevator systems shall comply with the Seattle Energy Conservation Code.

Note: The Seattle Energy Code includes the following provisions for energy efficiency of elevators and escalators.

C405.9.1 Elevator cabs. For the luminaires in each elevator cab, not including signals and displays, the sum of the lumens divided by the sum of the watts shall be no less than 35 lumens per watt. Ventilation fans in elevators that do not have their own air conditioning system shall not consume more than 0.33 watts/cfm at the maximum rated speed of the fan. Controls shall be provided that will de-energize ventilation fans and lighting systems when the elevator is stopped, unoccupied and with its doors closed for over 15 minutes.

C405.9.2 Escalators and moving walks. Escalators and moving walks shall comply with ASME A17.1/CSA B44 and shall have automatic controls configured to reduce speed to the minimum permitted speed in accordance with ASME A17.1/CSA B44 or applicable local code when not conveying passengers.

Exception: A power factor controller that reduces operating voltage in response to light loading conditions ((~~may~~)) <u>is permitted to</u> be provided in lieu of the variable speed function.

C405.9.3 Regenerative drive. An escalators designed either for one-way down operation only or for reversible split shall have a variable frequency regenerative drive that supplies electrical energy to the building electrical system when the escalator is loaded with passengers whose combined weight exceeds 750 pounds.

3016.16 Elevator landing illumination. Elevators shall comply with ASME A17.1, 2.11.10.2 Illumination at Landing Sills, as amended below.

2.11.10.2 Illumination at Landing Sills. The building corridors shall be so lighted that the illumination at the landing sills, when an elevator is in service, shall be not less than 100 lx (10 fc). <u>Illumination under emergency power shall comply with Section 1008.</u>

DRAFT

SECTION 3017
NEW INSTALLATIONS – GENERAL EMERGENCY OPERATION REQUIREMENTS

3017.1 General. All elevators shall conform to the requirements of this section and the specific requirements of Sections 3018 and 3019.

3017.2 Central control stations. The following criteria shall be met if buildings provide a fire command center in accordance with Section 911:

1. An additional two-position ("off" and "on") Phase I recall switch for each elevator or elevator group shall be installed when the control station is not within easy line of sight of the lobby Phase I recall switches; the switch(es) shall be rotated clockwise to go from "off" to "on" position;
2. A car position indicator shall be permanently installed, which shall be of a positive type that will not lose the car position nor need resetting on loss of power. Reading of the indicator shall not require special knowledge.
3. Firefighter's phone jacks shall be provided that allow each elevator car to be connected to the fire control center;

   Exception: Fire department radio systems may be provided in lieu of phone jacks if approved by the fire department.
4. A manual emergency power assignment switch;
5. A Phase I indicator;
6. A Phase II indicator.

3017.3 Nurses' preemption. Nurses' preemption (hospital service) may be allowed to commandeer up to one-half of the cars in a particular bank of elevators. At least one-half of the cars shall respond to Phase I and all cars not preempted shall respond.

3017.4 Phase I and II operation instructions. Operation instructions shall be available in accordance with ASME A17.1, 2.27.7. In addition, Phase I operating instructions shall be adjacent to the Phase I switch in the fire command center and other *approved* locations. The Phase II operation instructions shall identify the location of the elevator machine rooms and control rooms.

3017.5 Fireman's visual signal, ASME 2.27.3.2.6. Elevators requiring Phase I or Phase II operation shall comply with ASME 2.27.3.2.6 as amended below:

When ((~~Phase I Emergency Recall Operation is initiated by a fire alarm initiating device~~)) a smoke or heat detector for any location listed in 2.27.3.2.6(a) through (e) ((~~,~~)) is activated during Phase I Emergency Recall Operation as required by 2.27.3.2.3 or 2.27.3.2.4, or Phase II Emergency In-Car Operation as required by 2.27.3.3, the visual signal [see 2.27.3.1.6(h) and Fig. 2.27.3.1.6(h)] shall illuminate intermittently only in a car(s) with equipment in that location, as follows:

(a) machine room

(b) machinery space containing a ((~~motor controller~~)) or driving machine

(c) control room

((~~(d) control space~~))

(e) hoistway

DRAFT

SECTION 3018
NEW INSTALLATIONS – PHASE I RECALL REQUIREMENTS

3018.1 ASME A17.1, 2.27.3 General. ASME A17.1, 2.27.3, Firefighters' Emergency Operation: Automatic Elevators, is superseded by the following.

Phase I emergency recall operation shall be provided for all elevators with fully automatic open and close power-operated doors.

3018.2 ASME A17.1, 2.27.3.1 Phase I emergency recall operation. Elevators requiring Phase I recall emergency operation shall comply with ASME A17.1, 2.27.3.1 Phase I Emergency Recall Operation, and the following:

Elevator groups containing four or more cars shall be provided with two, three-position key switches per group. Two-position ("off" and "on") switches shall be provided in the fire command center if this code requires such a center. The switch(es) shall be rotated clockwise to go from "off" to "on" position. Hall call buttons common to an elevator group shall remain in service unless both Phase I recall switches of a four-car or larger group are placed in the recall mode, or a fire alarm recall signal is initiated.

SECTION 3019
NEW INSTALLATIONS – PHASE II IN-CAR OPERATION REQUIREMENTS (ASME A17.1, 2.27.8)

3019.1 Phase II In-car Operation. Elevators requiring Phase II in-car operation shall comply with ASME A17.1, 2.27.8 Switch Keys, as amended below.

ASME 2.27.8 Switch Keys. The key switches required by 2.27.2 through 2.27.5 and 2.27.11 for all elevators in a building shall be operable by the FEO-K1 key. The keys shall be Group 3 Security (see 8.1). A separate key shall be provided for each switch. These keys shall be kept in the key retainer box required by Section 3016.9 or 3016.16. ((~~on the premises in a location readily accessible to firefighters and emergency personnel, but not where they are available to the public.~~)) This key shall be of a tubular, 7 pin, style 137 construction and shall have a bitting of 6143521 starting at the tab sequenced clockwise as viewed from the barrel end of the key and cutting depths shall be in accordance with Fig. 2.27.8. The key shall be coded "FEO-K1." The possession of the "FEO-K1" key shall be limited to elevator personnel, emergency personnel, elevator equipment manufacturers, and authorized personnel during checking of Firefighters' Emergency Operation (see 8.1 ~~and 8.6.11.1~~).

((~~Where provided, a lock box, including its lock and other components, shall conform to the requirement of UL 1037 (see Part 9).~~

~~NOTE (2.27.8): Local authorities may specify additional requirements for a uniform keyed lock box and its location to contain the necessary keys.~~))

SECTION 3020
NEW INSTALLATIONS –
CONSTRUCTION OF HOISTWAYS, MACHINE ROOMS AND CONTROL ROOMS

3020.1 Construction of hoistways. All new elevator hoistways shall comply with ASME A17.1, section 2.1 as amended below.

SECTION 2.1
CONSTRUCTION OF HOISTWAYS AND HOISTWAY ENCLOSURES

2.1.1 Hoistway Enclosures

((~~Hoistway enclosures shall conform to 2.1.1.1, 2.1.1.2, or 2.1.1.3.~~))

Hoistways that penetrate a floor/ceiling assembly shall be protected by a fire-resistance-rated enclosure complying with this section.

Exceptions:

1. In other than Group H occupancies, an enclosure is not required for elevators located within atriums complying with Section 404. The elevator is required to comply with 2.1.1.3.
2. Hoistway enclosures are not required to be fire-resistance rated as provided in items 2.1 and 2.2.
   - 2.1 In parking garages, hoistway enclosures that serve only the parking garage are not required to be rated.
   - 2.2 In other than Groups I-2 and I-3, hoistway enclosures are not required to be rated, if the hoistway:
     - 2.2.1 Does not connect more than two *stories*.
     - 2.2.2 Does not open to a corridor in Group I and R occupancies.
     - 2.2.3 Does not open to a corridor on nonsprinklered floors in any occupancy.
     - 2.2.4 Is separated from floor openings and air transfer openings serving other floors by construction conforming to required shaft enclosures.
     - 2.2.5 Is limited to one smoke compartment.

2.1.1.1 Fire-Resistive Construction

2.1.1.1.1 ((~~Where fire-resistive construction is required, hoistways shall be enclosed in conformance with the requirements of the building code (see 1.3).~~)) Where rated hoistway enclosures are required, the enclosure shall be of fire-resistance rated construction as required for shafts by Section 713.4.

2.1.1.1.2 Partitions between hoistways and machine rooms and control rooms

(((~~*a*) machinery spaces outside the hoistway~~

~~(*b*) machine rooms~~

~~(*c*) control spaces outside the hoistway~~

~~(*d*) control rooms that have~~)) shall be fire partitions complying with Section 708 having a fire-resistive rating of at least one hour, or shall be of noncombustible solid ((~~or openwork~~)) construction ((~~that meets the requirements of~~

DRAFT

~~2.1.1.2.2(d)(1), (2), and (3)~~)). Partitions ((~~of solid construction~~)) shall be permitted to have openings essential for ropes, drums, sheaves, and other elevator equipment.

((~~Openwork construction shall reject a ball 25 mm (1 in.) in diameter, except where there are openings essential for ropes, drums, sheaves, and other elevator equipment.~~))

2.1.1.1.3 Hoistway enclosure openings shall be protected ((~~with entrances or access doors having a fire-protection rating conforming to the requirements of the building code~~)) in accordance with Section 716 as required for fire partitions. Doors shall be self- or automatic-closing by smoke detection in accordance with Section 716.5.9.3.

2.1.1.2 Non-Fire-Resistive Construction

2.1.1.2.1 Where fire-resistive construction is not required by 2.1.1, ((~~the building code,~~)) hoistway construction shall conform to 2.1.1.2.2 or 2.1.1.3.

2.1.1.2.2 The hoistway shall be fully enclosed ((~~conforming to 2.1.1.2.2(a), (b), (c), and (d); or 2.1.1.2.2(a), (b), and (e)~~.

~~(*a*) Enclosures and doors shall be unperforated to a height of 2 000 mm (79 in.) above each floor or landing and above the treads of adjacent stairways. The enclosure shall be unperforated, adjacent to, and for 150 mm (6 in.) on either side of any moving equipment that is within 100 mm (4 in.) of the enclosure.~~))

(*b*) Partitions between hoistways and machine rooms and control rooms

((~~(*1*) machinery spaces outside the hoistway~~

~~(*2*) machine rooms~~

~~(*3*) control spaces outside the hoistway~~

~~(*4*) control rooms~~)) shall be of solid ((~~or openwork~~)) construction ((~~that meets the requirements of 2.1.1.2.2(d)(1), (2), and (3)~~)). Partitions of solid construction shall be permitted to have openings essential for ropes, drums, sheaves, and other elevator equipment. ((~~Openwork construction shall reject a ball 25 mm (1 in.) in diameter, except where there are openings for ropes, drums, sheaves, and other elevator equipment.~~

~~(*c*) Openwork enclosures, where used above the 2 000 mm (79 in.) level, shall reject a ball 25 mm (1 in.) in diameter.~~

~~(*d*) Openwork enclosures shall be~~

~~(*1*) at least 2.2 mm (0.087 in.) thick wire, if of steel wire grille~~

~~(*2*) at least 2.2 mm (0.087 in.) thick, if of expanded metal~~

~~(*3*) so supported and braced as to deflect not over 15 mm (0.6 in.) when subjected to a force of 450 N (100 lbf) applied horizontally at any point~~))

(*e*) Enclosures shall be permitted to be glass, provided it is laminated glass conforming to ANSI Z97.1, 16 CFR Part 1201. ((~~, or CAN/CGSB-12.1, whichever is applicable (see Part 9).~~)) Markings as specified in the applicable standard shall be on each separate piece of glass and shall remain visible after installation.

2.1.1.2.3 Entrances shall be in conformance with 2.11, except 2.11.14, 2.11.15, 2.11.16, and 2.11.18.

2.1.1.3 Partially Enclosed Hoistways. For elevators that are not required to be fully enclosed by 2.1.1, protection at least 2 400 mm (94.5 in.) high shall be provided on the hoistway sides that are located 1 500 mm (59 in.) or less from elevator equipment to areas accessible to other than elevator personnel. Such protection shall comply with 2.1.1.2.

2.1.1.4 Multiple Hoistways. The number of elevators permissible in a hoistway shall be in conformance with the building code.

2.1.1.5 Strength of Enclosure. The hoistway enclosure adjacent to a landing opening shall be of sufficient strength to maintain, in true lateral alignment, the hoistway entrances. Operating mechanisms and locking devices shall be supported by the building wall, if load-bearing, or by other building structure. Adequate consideration shall be given to pressure exerted on hoistway enclosures as a result of windage and elevator operation. In high-rise buildings in Risk Category III or IV in accordance with Section 1604.5, for fire service access elevators according to Section 403.6.1, and in all buildings that are more than 420 feet (128 m) in *building height*, hoistway enclosures shall comply with Section 403.2.3.

3020.2 Private residence elevator hoistways. Hoistways for private residence elevators shall comply with Section 3020.1. ASME A17.1, 5.3.1.1, 5.3.1.1.1 and 5.3.1.1.2 do not apply.

3020.3 Location of equipment. Motor controllers, motion controllers and drives shall not be located in hoistways.

3020.4 Elevator machine rooms and control rooms. Elevator controls and machinery other than driving machines and governors shall be located in a room dedicated exclusively to elevator equipment. Listed electrical equipment that serves the machine room is permitted to be installed in machine rooms. Air conditioning equipment is permitted to be installed in machine rooms in accordance with ASME A17.1, 2.8.5.

DRAFT

3020.4.1 Fire-resistance rating of machine and control rooms. Elevator machine rooms and control rooms that are adjacent to the hoistway with unprotected openings into the hoistway shall be enclosed by fire partitions and horizontal assemblies with a fire-resistance rating of at least one-hour but not less than the rating of the hoistway. The separation between the room and the hoistway is permitted to be nonrated. Exterior walls and roofs are not required to have a fire-resistance rating unless required by other sections of this code.

ASME A17.1 sections 2.7.1.1 and 2.7.1.2 are superseded by this section.

3020.4.2 Machine rooms and control rooms for electric elevators. All machine rooms and control rooms for electric elevators shall comply with ASME A17.1 Section 2.7, Enclosure of Machine Rooms and Machinery Spaces, except 2.7.1.1 and 2.7.1.2.

3020.4.3 Machine rooms and control rooms for hydraulic elevators. All machine rooms and control rooms for hydraulic elevators shall have fire-resistive construction as required by Section 3020.4. Hydraulic elevator machine and control rooms are permitted to be located overhead, adjacent to, underneath the hoistway, or at a remote location. They shall not be located in the hoistway. Where hydraulic machines and electrical control equipment are located in spaces separated from the hoistway enclosure (see ASME 2.1.1 and 3020.1), such spaces shall be separated from other parts of the building by enclosures conforming to ASME 2.7.1.2 as amended by this code. ASME A17.1 Section 3.7 is superseded by this section.

3020.5 Working clearances. The following working clearances shall be provided inside the machine room or control room for all elevators.

1. The width of working space in front of controllers shall be the width of the controller or 30 inches, whichever is greater. The depth of the working space in the direction of access shall be not less than 48 inches.
2. The minimum clear space working clearances for free-standing equipment shall be 18 inches on two sides and between units of controllers, selectors and/or walls or other building obstructions. The 18 inch side clearance is permitted to be combined to permit 36 inches clear on one side only.
3. The minimum space at the rear of controllers with back-wiring, terminals or other elements requiring access shall be 36 inches.
4. The working space shall be free of pipes, vents, storage, ducts or any other obstruction.

Exception: If approved by the *building official*, space outside elevator control rooms and machine rooms is permitted to be used to provide working clearance required for the front of controllers for rooms containing only elevator controls. If the space outside the room serves as a means of egress, not more than one-half the required egress width shall overlap the working clearance. If space outside the control room or machine room is used to provide working clearance, means shall be provided for protection of the working clearance during alteration, repair and maintenance of elevator equipment. The working clearance shall be located in conditioned space. The room where the controls or machines are located shall comply with all other requirements for control rooms or machine rooms.

3020.6 Machine rooms or control rooms for private residence elevators. Private residence elevators shall be provided with a machine room or control room. No fire resistance rating is required for private residence elevator equipment or machine rooms.

3020.7 Labeling. Elevator machine and control rooms shall be identified by a permanent label on the door of the room. In buildings with more than one machine room or control room, the label shall identify which cars are served by the equipment in the room.

SECTION 3021
NEW INSTALLATIONS – FLOORS

3021.1 Floors. All new elevator hoistways, machine rooms and control rooms shall comply with ASME A17.1, 2.1.3.3, Construction of Floors, as amended below. ASME A17.1, 2.1.3.4 is not adopted.

ASME 2.1.3.3 Construction of Floors. Floors of hoistways, control rooms and machine rooms shall ((~~be of concrete or metal construction with or~~)) have a coated concrete or metal surface without perforations that will resist absorption of oil, grease and similar materials. Control rooms and machine rooms shall have floors that cover the entire area of the room. ((~~Metal floors shall conform to the following:~~

~~*(a)* If of bar-type grating, the openings between bars shall reject a ball 20 mm (0.8 in.) in diameter.~~

~~*(b)* If of perforated sheet metal or of fabricated openwork construction, the openings shall reject a ball 25 mm (1 in.) in diameter.~~))

DRAFT

SECTION 3022
EQUIPMENT IN HOISTWAYS, MACHINE ROOMS AND CONTROL ROOMS
(ASME A17.1 Section 2.8)

3022.1 Prohibited wiring, pipes and ducts. In accordance with ASME A17.1 Section 2.8 non-elevator electric wiring, pipes and ducts are prohibited in elevator machine rooms, control rooms and hoistways except as otherwise provided in this section. The use of false ceilings and furring does not remove such items from the elevator spaces and shall not be acceptable except as allowed by ASME A17.1, 2.8.2 as amended below.

3022.2 Amendment to ASME A17.1 2.8.3 All elevator hoistways, machine rooms and control rooms shall comply with ASME A17.1 2.8.1 and 2.8.3, as amended below.

ASME 2.8 Equipment in Hoistways, Machinery Spaces, Machine Rooms, ((~~Control Spaces,~~)) and Control Rooms

2.8.1 Equipment Allowed. Only machinery and equipment used directly in connection with the elevator shall be permitted in elevator hoistways, machinery spaces, machine rooms, ((~~control spaces,~~)) and control rooms.

2.8.3 Pipes, Ducts, Tanks, and Sprinklers

2.8.3.1 ((~~Steam and hot water pipes shall be~~)) Pipes conveying gases, vapors or liquids are not permitted to be installed in hoistways, machinery spaces, machine rooms, ((~~control spaces,~~)) and control rooms unless necessary for operation or maintenance of the elevator and not used for any other purpose. ((~~for the purpose of heating these areas only, subject to 2.8.3.1.1 through 2.8.3.1.3~~)).

Exception: Subject to the approval of the *building official*, pipes that are not necessary for operation or maintenance of the elevator are permitted in machinery spaces, machine rooms and control rooms if they are protected with double containment and the joints within the machine space, machine room or control room are threaded, soldered or welded. Pipes shall not be located less than 7 feet above the floor in machine rooms.

((~~2.8.3.1.1~~ ~~Heating pipes shall convey only low pressure steam [100 kPa (15 psi) or less] or hot water [100° C (212° F) or less].~~

~~**2.8.3.1.2** All risers and return pipes shall be located outside the hoistway. When the machinery space, machine room, control space, or control room is located above the roof of the building, heating pipes for the machinery space, machine room, control space, or control room shall be permitted to be located in the hoistway between the top floor and the machinery space, machine room, control space, or control room.~~

~~**2.8.3.1.3** Traps and shutoff valves shall be provided in accessible locations outside the hoistway.~~))

2.8.3.2 Ducts shall be permitted to be installed in the hoistway, ((~~machinery space,~~)) machine room, ((~~control space,~~)) or control room for the purpose of heating, cooling, ventilating, and venting these areas only and shall not encroach upon the required clearances.

Ducts and electrical conduit are permitted to pass through an elevator machine room or control room if they are separated from the room by construction equal to the rated construction of the room and so located that all required clearances are maintained.

2.8.3.3 Sprinkler systems conforming to NFPA 13 ((~~or the NBCC, whichever is applicable (see Part 9)~~)) shall be permitted to be installed in the hoistway, ((~~machinery space,~~)) machine room, ((~~control space,~~)) or control room subject to rules promulgated by the *building official*. ((~~2.8.3.3.1 through 2.8.3.3.4.~~

~~**2.8.3.3.1** All risers shall be located outside these spaces. Branch lines in the hoistway shall supply sprinklers at not more than one floor level. When the machinery space, machine room, control space, or control room is located above the roof of the building, risers and branch lines for these sprinklers shall be permitted to be located in the hoistway between the top floor and the machinery space, machine room, control space, or control room.~~

~~**2.8.3.3.2** In jurisdictions not enforcing the NBCC, where elevator equipment is located or its enclosure is configured such that application of water from sprinklers could cause unsafe elevator operation, means shall be provided to automatically disconnect the main line power supply to the affected elevator and any other power supplies used to move the elevator upon or prior to the application of water.~~

~~(*a*) This means shall be independent of the elevator control and shall not be self-resetting.~~

~~(*b*) Heat detectors and sprinkler flow switches used to initiate main line elevator power shutdown shall comply with the requirements of NFPA 72.~~

~~(*c*) The activation of sprinklers outside of such locations shall not disconnect the main line elevator power supply. See also 2.27.3.3.6.~~

~~**2.8.3.3.3** Smoke detectors shall not be used to activate sprinklers in these spaces or to disconnect the main line power supply.~~))

DRAFT

2.8.3.3.4 ((~~In jurisdictions not enforcing the NBCC, when~~)) Where sprinklers are installed not more than 600 mm (24 in.) above the pit floor, 2.8.3.3.4(a) and (b) apply to elevator electrical equipment and wiring in the hoistway located less than 1200 mm (48 in.) above the pit floor, except earthquake protective devices conforming to 8.4.10.1.2(d); and on the exterior of the car at the point where the car platform sill and the lowest landing hoistway door sill are in vertical alignment.

(*a*) Elevator electrical equipment shall be weatherproof (Type 4 as specified in NEMA 250).

(*b*) Elevator wiring, except traveling cables, shall be identified for use in wet locations in accordance with the requirements in the Seattle Electrical Code. ((~~NFPA 70.~~))

2.8.3.4 Other pipes or ducts conveying gases, vapors, or liquid and not used in connection with the operation of the elevator shall not be installed in any hoistway, machinery space, machine room, ((~~control space,~~)) or control room. Where a machinery space, machine room, ((~~control space,~~)) or control room, or hoistway extend above the roof of a building, pipes shall be permitted from roof drains to the closest point where they can be diverted out of this space. Pipes shall be covered to prevent leakage or condensate from entering the machinery space, machine room, ((~~control space,~~)) control room, or hoistway.

2.8.3.5 Where permitted and provided, pipes, drains, and tanks, or similar equipment that contains liquids, shall not be located directly above the elevator equipment and shall not encroach upon the required clearances in the hoistway, ((~~machinery space,~~)) machine room, ((~~control space,~~)) or control room.

SECTION 3023
PITS (ASME A17.1, 2.2.2)

3023.1 Design and Construction of Pits. The design and construction of elevator pits shall comply with ASME A17.1, 2.2.2 as amended below:

2.2.2.1 The construction of the pit walls, the pit floor, and any pit access doors (see 2.2.4) shall conform to 2.1.1 and 2.1.2.

2.2.2.2 The floor of the pit shall be approximately level, except that

(a) trenches or depressions shall be permitted for the installation of buffers, compensating sheaves and frames, and vertically sliding biparting hoistway doors, where structural conditions make such trenches or depressions necessary

(b) in *existing buildings*, where new elevators are installed or existing elevators are altered, existing foundation footings extending above the general level of the pit floor shall be permitted to remain in place, provided that the maximum encroachment of such footings does not exceed 15% of the cubic content of the pit, and further provided that it is impracticable to remove the footing.

2.2.2.3 Permanent provisions shall be made to prevent accumulation of ground water in the pit (see 2.1.2.2).

2.2.2.4 Drains and sump pumps, where provided, shall comply with the applicable plumbing code, and they shall be provided with a positive means to prevent water, gases, and odors from entering the hoistway.

2.2.2.5 In elevators that are fire service access or occupant evacuation elevators ((~~provided with Firefighters' Emergency Operation~~)), a drain or sump pump shall be provided in the area of the pit that serves those elevators. The sump pump/drain shall have the capacity to remove a minimum of 11.4 m^3/h (3,000 gal/h) per ((~~elevator~~)) hoistway.

2.2.2.6 Sumps and sump pumps in pits, where provided, shall be covered. The cover shall be secured and level with the pit floor.

All elevators other than fire service access and occupant evacuation elevators shall be provided with sump holes that are at least 18 inches by 18 inches by 18 inches per hoistway.

3023.2 Access to Pits. All pits shall comply with ASME A17.1, 2.2.4 as amended below:

ASME 2.2.4 Pit Access. Safe and convenient access shall be provided to all pits, and shall conform to 2.2.4.1 through 2.2.4.6.

2.2.4.1 Access shall be by means of the lowest hoistway door or by means of a separate pit access door.

2.2.4.2 There shall be installed in the pit of each elevator, where the pit extends more than 900 mm (35 in.) below the sill of the pit access door (lowest hoistway door or separate pit access door), a fixed vertical ladder of noncombustible material, located within reach of the access door. The ladder is permitted to be retractable or nonretractable. Nonretractable ladders, where provided, shall conform to 2.2.4.2.1 through 2.2.4.2.6. Retractable ladders, where provided, shall conform to 2.2.4.2.1 through 2.2.4.2.3 and 2.2.4.2.5 through 2.2.4.8. When in the extended position, retractable ladders shall conform to 2.2.4.2.4.

2.2.4.2.1 The ladder shall extend not less than 1 200 mm (48 in.) above the sill of the access door or handgrips shall be provided to the same height.

DRAFT

2.2.4.2.2 The ladder rungs, cleats, or steps shall be a minimum of 400 mm (16 in.) wide. When obstructions are encountered, the width shall be permitted to be decreased to less than 400 mm (16 in.). The reduced width shall be as wide as the available space permits, but not less than 225 mm (9 in.).

2.2.4.2.3 The ladder rungs, cleats, or steps shall be spaced 300 mm (12 in.) ± 13 mm (± 0.5 in.) on center, shall be provided to not less than the height of access door sill, and shall be designed to minimize slipping (e.g. knurling, dimpling, coating with skid-resistant material, etc.).

2.2.4.2.4 A clear distance of not less than 115 mm (4.5 in.) from the centerline of the rungs, cleats, or steps to the nearest permanent object in back of the ladder shall be provided.

2.2.4.2.5 Side rails, if provided, shall have a clear distance of not less than 115 mm (4.5 in.) from their centerline to the nearest permanent object.

2.2.4.2.6 The ladder and its attachments shall be capable of sustaining a load of 135 kg (300 lb.)

2.2.4.2.7 Retractable ladders that are in the line of movement of the car or counterweight when not fully retracted, shall operate a retractable ladder electrical device (see 2.26.2.38) that shall cause the power to be removed from the elevator driving-machine motor and brake unless the ladder is in its fully retracted position.

2.2.4.2.8 Retractable ladders shall be capable of being extended, mechanically secured and unsecured, and retracted from the access door, and

(*a*) the force(s) required to extend a retractable ladder from the fully retracted position to the extended and mechanically secured position shall not exceed 220 N (50 lbf)

(*b*) after being extended and mechanically secured, a retractable ladder shall remain secured in the extended position when subjected to a horizontal force not to exceed 2 220 N (500 lbf)

(*c*) the force(s) required to retract a retractable ladder from its extended position to its fully retracted position, after being unsecured, shall not exceed 220 N (50 lbf)

(*d*) the ladder shall be mechanically secured when in the retracted position

2.2.4.3 Pit access by a ladder shall not be permitted when the pit floor is more than 3 000 mm (120 in.) below the sill of the access door, except where there is no building floor below the bottom terminal landing, this height shall be permitted to be greater but not more than 4 200 mm (165 in.).

2.2.4.4 Pits shall be accessible only to elevator personnel.

2.2.4.5 Separate pit access door, when provided, shall be subject to the following requirements:

(*a*) If the door swings into the pit, it shall be located so that it does not interfere with moving equipment.

(*b*) If the door swings out, and the lowest structural or mechanical part, equipment, or device installed beneath the car platform, except guide shoes or rollers or safety jaw assemblies, projects below the top of the separate pit access door opening when the car is level with the bottom terminal landing

(*1*) an electric contact conforming to 2.26.2.26 shall be provided to prevent operation of the elevator when the door is open

(*2*) the door shall be provided with a vision panel(s) that is glazed with clear wired glass not less than 6 mm (0.25 in.) thick, will reject a ball 150 mm (6 in.) in diameter, and have an area of not more than 0.03 m^2 (47 $in.^2$).

(*c*) The door shall provide a minimum opening of 750 mm (29.5 in.) in width and ((~~1 825~~)) <u>2 032</u> mm (((~~72~~)) <u>80</u> in.) in height.

(*d*) The door shall be equipped with a barrier conforming to 2.11.1.2(i), where the door sill is located more than 300 mm (12 in.) above the pit floor.

(*e*) The door shall be self-closing and provided with a spring-type lock arranged to permit the door to be opened from inside of the pit without a key. Such doors shall be kept closed and locked. A key shall be required to unlock the lock from outside the hoistway. The key shall be of Group 1 Security (see 8.1).

<u>(*f*) Separate pit access doors shall not be located where a person, upon entering the pit, can be struck by any part of the car or counterweight when either is on its fully compressed buffer.</u>

2.2.4.6 Means to unlock the access door from inside the pit shall be provided. The means shall be located

(*a*) when no pit ladder is provided, not more than 1 825 mm (72 in.) vertically above the pit floor, or

(*b*) when a pit ladder is provided, not more than 1 825 mm (72 in.) vertically above a rung, cleat, or step. The minimum distance from the top rung, cleat, or step to the top of the pit ladder or handhold shall not be less than 1 200 mm (48 in.) (see 2.2.4.2.1 and Nonmandatory Appendix J, Fig. J-1), and

DRAFT

(*c*) with the door in the closed position, in a plane not more than 1 000 mm (39 in.) horizontally from a rung, cleat, or step of the pit ladder (see Nonmandatory Appendix J, Fig. J-1).

3023.2 Access to underside of cars. Access to the underside of cars shall comply with ASME A17.1, 2.2.8 as amended below:

2.2.8 Access to Underside of Car. Where the distance from the pit floor to the underside of the plank channels or slings exceeds 2 100 mm (83 in.), with the car at the lowest landing, a means shall be permanently installed or permanently stored in the pit to provide access to the equipment on the underside of the car. When access is provided by means of a working platform it shall conform to the requirements of 2.7.5.3.2 through 2.7.5.3.6.

When working platform inspection operation is provided according to 2.7.5.3.6, in hoistways containing a single elevator

(*a*) a pit access door is required, or

(*b*) an additional elevator personnel shall be present outside the hoistway when the pit inspection operation is in effect.

SECTION 3024
SHUTOFF VALVE (ASME A17.1, 3.19.4.1)

3024.1 Hydraulic elevator shutoff valve. All hydraulic elevators shall comply with ASME A17.1, 3.19.4.1, Shutoff Valve, as amended below:

ASME 3.19.4.1 Shutoff Valve. A manually operated shutoff valve shall be provided between the hydraulic machines and the hydraulic jack and shall be located outside the hoistway and adjacent to the hydraulic machine. An additional shutoff valve may be required in the pit by WAC 296-96-02425 as it existed on February 15, 2013.

((~~Where the hydraulic machine is located in the hoistway, the manually operated shutoff valve shall be permitted to be located inside the hoistway, provided that it is accessible from outside the hoistway to elevator personnel only (see 8.1).~~))

SECTION 3025
GUARD AT CEILING INTERSECTION (ASME A17.1, 6.1.3.3.11)

3025.1 Escalator guards. All escalators shall comply with ASME A17.1, 6.1.3.3.11, Guard at Ceiling Intersection, and the following:

Guards shall be provided at any pinching, snagging or wedging points between the handrail, balustrade and adjacent building components or equipment if such points are within the clearances delineated in 6.1.3.3.11.

DRAFT

SECTION 3026
TEST REPORTS

3026.1 Test reports. For tests required by Section 3028 and ASME 17.1, Part 8, as amended in this code, immediately after tests are completed all test results shall be submitted to the *building official* for approval on forms furnished by the *building official*. The submitted results shall be completed and signed by the person performing the tests and shall identify the testing firm. Copies of the completed forms shall be provided to the owner or to the owner's authorized agent.

SECTION 3027
ACCEPTANCE INSPECTIONS AND TESTS

3027.1 Acceptance inspections and tests. Inspections and tests shall comply with ASME A17.1, 8.10, Acceptance Inspection and Tests, as amended below.

ASME 8.10.1 General Requirements for Acceptance Inspections and Tests

8.10.1.1 Persons Authorized to Make Acceptance Inspections and Tests

8.10.1.1.1 The acceptance inspection shall be made by an inspector employed by the ((~~authority having jurisdiction, or by a person authorized by the authority having jurisdiction~~)) *building official*.

8.10.1.1.2 The person installing or altering the equipment shall perform all of the tests required by ASME A17.1, 8.10.2 through 8.10.5 in the presence of the inspector specified in 8.10.1.1.1.

((~~**8.10.1.1.3** The inspector shall meet the qualification requirements of the ASME QEI-1. Inspectors and inspection supervisors shall be certified by an independent, accredited, certifying organization as specified in 8.10.1.2 (see 1.3).~~))

SECTION 3028
PERIODIC INSPECTIONS AND TESTS

3028.1 Persons authorized to make periodic inspections and witness tests. Periodic inspection and tests shall comply with WAC 296-96-23600 as it existed on February 15, 2013 and ASME A17.1, 8.11 as amended below.

8.11.1 General Requirements for Periodic Inspections and Witnessing of Tests

((~~**8.11.1.1 Persons Authorized to Make Periodic Inspections and Witness Tests.** The inspector shall meet the qualification requirements of the ASME QEI-1. Inspectors and inspection supervisors shall be certified an independent, accredited, certifying organization as specified in 8.10.1.2 (see 1.3).~~))

8.11.1.1.1 Periodic Inspections

(a) Periodic inspections shall be made by an inspector employed by the ((~~authority having jurisdiction~~)) *building official* or by a person authorized by the ((~~authority having jurisdiction~~)) *building official.*

((~~*(b)* The inspector shall submit a signed written report to the authority having jurisdiction containing the following information:~~

~~*(1)* date of inspection(s)~~

~~*(2)* components or systems that have not been inspected~~

~~*(3)* Code deficiencies noted during the inspection and a statement as to corrective action taken, if any~~))

8.11.1.1.2 Periodic tests

(a) Periodic tests as required in 8.6 shall be performed by elevator personnel that are qualified to perform such tests. These tests shall be witnessed by an inspector (see 8.11.1.1) employed by the ((~~authority having jurisdiction~~)) *building official*, or by persons authorized by the ((~~authority having jurisdiction~~)) *building official.*

((~~*(b)* The inspector shall submit a signed written report to the authority having jurisdiction containing the following information:~~

~~*(1)* date of inspection(s)~~

~~*(2)* type of test(s) performed~~

~~*(3)* detailed results of the test(s) including but not limited to, speed, governor trip speed, safety slide distance, relief valve setting, escalator/moving walk brake torque setting, etc.~~

~~*(4)* Code deficiencies noted during the test~~

~~*(5)* statement as to any corrective action taken~~))

8.11.1.2 Applicability of Inspection Requirements. Inspections required by 8.11.2 through 8.11.5 are to determine that the existing equipment conforms with the following applicable Code requirements:

(a) the Code at the time of installation

(b) the Code effective as applicable to and for each alteration

((~~*(c)* the ASME A17.3 Code, if adopted by the authority having jurisdiction~~

~~NOTES (8.11.1.2):~~

~~*(1)* The ASME A17.2 *Guide for Inspection of Elevators, Escalators, and Moving Walks* (see Preface, ASME Elevator Publications) is a guide for inspections.~~

~~*(2)* References to "Items" of the ASME A17.2 *Guide for Inspection of Elevators, Escalators, and Moving Walks* and to the requirements of this Code are indicated in parentheses as a convenient reference to the applicable inspection procedures and requirements. It is important to understand that suggested test and inspection methodologies represent an approach but are neither exclusive nor comprehensive.~~

8.11.1.3 Periodic Inspection and Test Frequency. ((~~The frequency of periodic inspections and tests shall be established by the authority having jurisdiction.~~)) The equipment listed in Table 3028 shall be inspected and tested at the intervals specified in Table 3028.

NOTE: Recommended intervals for periodic inspections and tests can be found in ((~~Nonmandatory Appendix N~~)) Table 3028.

8.11.1.4 Installation Placed Out of Service. Periodic inspections and tests shall not be required when an installation is placed "out of service":

(a) as defined by the ((~~authority having jurisdiction~~)) *building official;* or

(b) when an installation whose power feed lines have been disconnected from the mainline disconnect switch; and

DRAFT

(1) an electric elevator, dumbwaiter, or material lift whose suspension ropes have been removed, whose car and counterweight rest at the bottom of the hoistway, and whose hoistway doors have been permanently barricaded or sealed in the closed position on the hoistway side;

(2) a hydraulic elevator, dumbwaiter, or material lift whose car rests at the bottom of the hoistway; when provided with suspension ropes and counterweight, the suspension ropes have been removed and the counterweight rests at the bottom of the hoistway; whose pressure piping has been disassembled and a section removed from the premises and whose hoistway doors are permanently barricaded or sealed in the closed position on the hoistway side; or

(3) an escalator or moving walk whose entrances have been permanently barricaded.

8.11.1.5 Making Safety Devices Ineffective. No person shall at any time make any required safety device or electrical protective device ineffective, except where necessary during tests and inspections. Such devices shall be restored to their normal operating condition in conformity with the applicable requirements prior to returning the equipment to service (see 2.26.7).

8.11.1.7 Unique or Product-Specific Procedures or Methods. Where unique or product-specific procedures or methods are required to maintain, repair, replace, inspect or test equipment, such procedures or methods shall be provided by the manufacturer or installer. These procedures and any unique devices required by the procedures for inspection and testing shall be accessible on site to elevator personnel [see 8.6.1.2.2(b)].

Table 3028
Inspection and Test Intervals
Note: Intervals are specified in months; sections reference ASME A17.1 unless otherwise specified

Section	Equipment Type	Periodic Inspections		Periodic Tests							
				Category One		Category Three		Category Five		Other	
		Requirement	Interval	Requirement	Interval	Requirement	Interval	Requirement	Interval	Requirement	Interval
8.11.2	Electric elevators	8.11.2.1	12	8.6.4.19	12	N/A	N/A	8.6.4.20	60		
8.11.3	Hydraulic elevators	8.11.3.1	12	8.6.5.14	12	8.6.5.15	36	8.6.5.16	60		
8.11.4; SBC 3028	Escalators & moving walks	8.11.4.1	12	8.6.8.15	12	N/A	N/A	N/A	N/A	SBC 3028	12
8.11.5.3	Hand elevators	8.11.2.1	12	8.6.4.19	12	N/A	N/A	8.6.4.20, 8.6.5.16	60		
8.11.5.4	Dumbwaiters	8.11.2.1, 8.11.3.1	12	8.6.4.19, 8.6.5.14	12	8.6.5.15	36	8.6.4.20, 8.6.5.16	60		
8.11.5.5	Material lifts and dumbwaiters with automatic transfer devices	8.11.2.1, 8.11.3.1	12	8.6.4.19, 8.6.5.14	12	8.6.5.15		8.6.4.20, 8.6.5.16	60		
8.11.5.6	Special purpose personnel elevators	8.11.2.1, 8.11.3.1	12	8.6.4.19, 8.6.5.14		8.6.5.15		8.6.4.20, 8.6.5.16	60		
8.11.5.7	Inclined elevators	8.11.2.1, 8.11.3.1	12	8.6.4.19, 8.6.5.14		8.6.5.15		8.6.4.20, 8.6.5.16	60		
8.11.5.9	Screw-column elevators	8.11.2.1, 8.11.3.1	12	8.6.4.19, 8.6.5.14		8.6.5.15		8.6.4.20, 8.6.5.16	60		
8.11.5.10	Rooftop elevators	8.11.2.1, 8.11.3.1	12	8.6.4.19, 8.6.5.14		8.6.5.15		8.6.4.20, 8.6.5.16	60		
8.11.5.11	Rack & pinion elevators	8.11.2.1, 8.11.3.1	12	8.6.4.19, 8.6.5.14		8.6.5.15		8.6.4.20, 8.6.5.16	60		
8.11.5.12	Limited use/ limited application elevators	8.11.2.1, 8.11.3.1	12	8.6.4.19, 8.6.5.14		8.6.5.15		8.6.4.20, 8.6.5.16	60		

DRAFT

3028.2 Category Five tests. Elevators shall be subject to five-year inspection test requirements in accordance with Table 3028, Periodic Test Requirements – Category Five, except that safety and governor systems of cars operating on wood guide rails shall be tested by tripping the governor by hand with rated load in the car, and the car at rest.

All Category Five tests shall comply with ASME A17.1, 8.6 as amended below:

ASME 8.6.4.20 Periodic Test Requirements – Category 5.

NOTE: For test frequency, see ((~~8.11.1.3~~)) Table 3028.

8.6.4.20.1 Car and Counterweight Safeties. Types A, B, and C car and counterweight safeties shall be tested in accordance with 8.6.4.20.1(a) ((~~or subject to approval by the authority having jurisdiction with 8.6.4.20.1(b)~~)).

(a) Rated Load and Rated Speed Test. Car safeties, except those operating on wood guide rails, and their governors, shall be tested with rated load in the car. Counterweight safety tests shall be made with no load in the car. Tests shall be made by tripping the governor by hand at the rated speed. The following operational conditions shall be checked (Item 2.29.2):

(1) Type B safeties shall stop the car with the rated load within the required range of stopping distances for which the governor is tripped (Item 2.29.2) and the level of the platform checked for conformance to 2.17.9.2.

(2) For Type A safeties and Type A safety parts of Type C safeties, there shall be sufficient travel of the safety rollers or dogs remaining after the test to bring the car and its rated load to rest on safety application at governor tripping speed. The level of the platform shall be checked for conformance to 2.17.9.2.

((~~*(b) Alternative Test Method for Car Safeties.* The alternative test methods shall comply with 8.6.11.10 and the following:~~

~~*(1)* The testing of safeties with any load in the car, centered on each quarter of the platform symmetrically with relation to the centerlines of the platform from no load up to rated load, and at not less than rated speed shall be permitted provided that~~

~~*(a)* when the alternative test is performed, the test shall stop the car and verify that the safeties will be capable of stopping an overspeeding car in accordance with the requirements of Section 2.17 applicable to the specific classification of safeties, and~~

~~*(b)* when applied, the method shall verify that the safeties perform or are capable of performing in compliance with 8.6.4.20.1(a) and the platform shall not be out of level more than 30 mm/m (0.36 in./ft) in any direction.~~))

(2) A test tag as required in 8.6.1.7.2 shall be provided.

8.6.4.20.2 Governors

(a) The tripping speed of the governor and the speed at which the governor overspeed switch, where provided, operates shall be tested to determine conformance with the applicable requirements and the adjustable means shall be sealed (Item 2.13.2.1).

(b) The governor rope pull-through and pull-out forces shall be tested to determine conformance with the applicable requirements, and the adjustment means shall be sealed (Item 2.13.2.1).

(c) After these tests in jurisdictions enforcing NBCC, a metal tag indicating the date of the governor tests, together with the name of the person or firm that performed the tests, shall be attached to the governor in a permanent manner.

8.6.4.20.3 Oil Buffers

(a) Car oil buffers shall be tested to determine conformance with the applicable requirements by

(1) running the car onto the buffer with rated load at rated speed, ((~~or~~

~~*(2)* subject to approval by the authority having jurisdiction~~

~~*(a)* running the car with any load, from no load up to rated load onto the buffer at rated speed when the requirements of 8.6.11.10 are complied with, provided that when applied the method verifies that the buffer performs or is capable of performing in compliance with 8.6.4.20.3(a), except as specified in 8.6.4.20.3(b) and (c) (Item 5.9.2.1). Counterweight oil buffers shall be tested by running the counterweight onto its buffer at rated speed with no load in the car, except as specified in 8.6.4.20.3(b) and (c) (Item 5.9.2.1), or~~

~~*(b)* running the car onto the buffer with any load, from no load up to rated load, and at less than rated speed, when the requirements of 8.6.11.10 are complied with, provided that when applied, the method verifies that the buffer performs or is capable of performing in compliance with 8.6.4.20.3(a)~~))

(b) For reduced stroke buffers, this test shall be made at the reduced striking speed permitted (Item 5.9.2.1).

(c) This test is not required where a Type C safety is used (see 8.6.4.20.1).

(d) In making these tests, the normal and emergency terminal stopping devices shall be made temporarily inoperative. The final terminal stopping devices shall remain operative and be temporarily relocated, if necessary, to permit compression of the buffer during the test.

(e) After completion of the test, a metal tag, indicating the date of the test, together with the name of the person or firm who performed the test, shall be attached to the buffer [Item 5.3.2(b)].

(f) Counterweight oil buffers shall be tested by running the counterweight onto its buffer at rated speed with no load in the car, except as specified in 8.6.4.20.3(b) and (c) (Item 5.9.2.1), or at reduced speed if the requirements of 8.6.11.10 are met.

DRAFT

(g) A test tag as required in 8.6.1.7.2 shall be provided.

8.6.4.20.4 Driving-Machine Brake(s). For passenger elevators and all freight elevators, the driving-machine brake shall be tested for compliance with applicable requirements, in accordance with 8.6.4.20.4(a), ((~~or subject to approval by the authority having jurisdiction with 8.6.4.20.4(b).~~))

For elevators installed under ASME A17.1-2000/ CSA B44-00 and later editions, have the brake setting verified in accordance with the data on the brake marking plate.

Upon completion of the test, the means of adjusting the holding capacity shall be sealed to prevent changing the adjustment without breaking the seal. The seal shall bear or otherwise attach the identification of the person or firm that installed it. (See also 8.6.1.7.2, Periodic Test Tags.)

(a) Test with load per Table 8.6.4.20.4. Place the load as shown in Table 8.6.4.20.4 in the car. The driving-machine brake, on its own, shall hold the car with this load. With no load in the car the driving-machine brake shall hold the empty car at rest, and shall decelerate an empty car traveling in the up direction from governor tripping speed. The driving-machine brake on freight elevators of Class C-2 loading, when loaded to their maximum design load, shall hold the elevator car at rest (Item 2.17.2.1).

~~(((*(b) Alternative Test Method for Driving-Machine Brakes.* The alternative test methods shall comply with 8.6.11.10 and the following:~~

~~*(1)* Any method of verifying conformity of the driving-machine brake with the applicable Code requirements (see 2.24.8.3 and Table 8.6.4.20.4) shall be permitted, including the testing method of the brakes with or without any load in the car, provided that when applied the method verifies that the brake performs or is capable of performing in compliance with 8.6.4.20.4(a).~~))

(2) A test tag as required in 8.6.1.7.2 shall be provided.

((~~**8.6.11.10 Category 5 Tests Without Load Via Alternative Test Methodologies**~~

~~**8.6.11.10.1 Where Permitted.** Alternative test methods without load are permitted for Category 5 testing subject to approval by the authority having jurisdiction of~~

~~*(a)* car and counterweight safeties per 8.6.4.20.1~~

~~*(b)* oil buffers per 8.6.4.20.3~~

~~*(c)* driving-machine brakes per 8.6.4.20.4, and~~

~~*(d)* braking system, traction, and traction limits per 8.6.4.20.10~~

~~NOTE: See 8.10, Note (2).~~

~~**8.6.11.10.2 Alternative Test Method and Tools**~~

~~*(a)* An alternative test method shall be~~

~~*(1)* based on sound engineering principles~~

~~*(2)* validated and documented via engineering tests~~

~~*(b)* The method, measuring devices, and tools shall be capable of producing reliable and consistent measurements, suitable for the intended measurement. The monitoring and calibration of the measuring devices or tools shall be in accordance with the provider's guidelines.~~

~~**8.6.11.10.3 Alternative Test Method Procedure.** The alternative test method shall~~

~~*(a)* include requirements to obtain and verify car and counterweight masses if necessary for the test~~

~~*(b)* have a procedure document that~~

~~*(1)* defines the permissible equipment range and limitations regarding use~~

~~*(2)* establishes monitoring and calibration criteria for tools or measuring devices as appropriate~~

~~*(3)* defines the test set-up procedure~~

~~*(4)* provides instructions on how to interpret results and correlate the results to pass-fail criteria~~

~~*(c)* describe how to correlate no-load test results with previously acquired full load and no load results~~

~~*(d)* be included in the maintenance control program [see 8.6.1.2.1(a)]~~

~~*(e)* include the information required by 8.6.1.2.1(f) where applicable, and~~

~~*(f)* require a report conforming to 8.6.11.10.4.~~

~~**8.6.11.10.4 Alternative Test Method Report.** The alternative test method report shall~~

~~*(a)* identify the alternative test tool (make/model) used to perform the test~~

DRAFT

~~*(b)* identify the company performing the tests, names of personnel conducting and witnessing the tests, and testing dates~~

~~*(c)* contain all required printouts or record of tests required to demonstrate compliance to the testing requirement that were gathered during an acceptance test~~

~~*(d)* identify which results from the baseline test are to be used for future compliance evaluation~~

~~*(e)* record the car and counterweight masses that were obtained per 8.6.11.10.3(a) during the acceptance test and during any subsequent Category 5 test if required by test method~~

~~*(f)* contain all subsequent Category 5 results with pass-fail conclusions regarding Code compliance~~

~~*(g)* remain on site or shall be available to elevator personnel and the authority having jurisdiction.~~))

3028.3 Cleaning and testing of escalators and moving walks. In addition to the periodic inspection and tests specified in Table 3028, escalator and moving walk trusses and pans shall be cleaned every 12 months.

3028.4 Step/skirt test. The step/skirt performance index test specified in 8.6.8.15.19 is required for all periodic escalator tests at intervals specified in Table 3028. Escalator and moving walk step/skirt shall be performed every 12 months.

SECTION 3029
REQUIREMENTS FOR MAINTENANCE CONTROL PROGRAM AND REMOTE MONITORING

3029.1 ASME A17.1, 8.6.1 General Maintenance Requirements. Conveyances shall be maintained in accordance with ASME A17.1, 8.6.1 as amended below.

8.6.1.2.1 A written Maintenance Control Program shall be in place to maintain the equipment in compliance with the requirements of 8.6. The MCP shall specify examinations, tests, cleaning, lubrication, and adjustments to applicable components at regular intervals (see definition for *maintenance*) and shall comply with the following.

(a) "A Maintenance Control Program for each unit (see 8.6.1.1.1) shall be provided by the person(s) and/or firm maintaining the equipment and shall be viewable on-site by elevator personnel at all times from time of acceptance inspection and test or from the time of equipment installation or alteration (see 8.10.1.5)."

(b) The MCP shall include, but not be limited to, the Code required maintenance tasks, maintenance procedures, and examination and test listed with the associated requirement (see 8.6.4 through 8.6.11). Where maintenance tasks, maintenance procedures, or examinations or tests have been revised in 8,6, the MCP shall be updated.

(c) The MCP shall reference On-Site Equipment Documentation (see 8.6.1.2.2) needed to fulfill 8.6.1.2.1(b) and On-Site Maintenance Records (see 8.6.1.4.1) that record the completion of all associated maintenance tasks specified in 8.6.1.4.1(a).

((~~(d) Where the MCP is maintained remotely from the machine room, machinery space, control room, or control space (see 8.11.1.8), instructions for on-site locating or viewing the MCP either in hard copy or in electronic formal shall be posted on the controller or at the means necessary for test (see 2.7.4). The instructions shall be permanently legible with characters a minimum of 3 mm (0.125 in.) in height.~~)) The MCP shall be posted in the machine room, machinery place or control room.

(e) The specified scheduled maintenance intervals (see 1.3) shall, as applicable, be based on

(1) equipment age, condition, and accumulated wear

(2) design and inherent quality of the equipment

(3) usage

(4) environmental conditions

(5) improved technology

(6) the manufacturer's recommendations and original equipment certification for any SIL rated devices or circuits (see 8.6.3.12 and 8.7.1.9)

(7) the manufacturer's recommendations based on any ASME A17.7/CSA B44.7 approved components or functions

(f) Procedures for tests; periodic inspections; maintenance; replacements; adjustments; and repairs for traction-loss detection means, broken-suspension-member detection means, residual-strength detection means, and related circuits shall be incorporated into the made part of the Maintenance Control Program. [See 2.20.8.1, 2.20.8.2, 2.20.8.3, ((~~8.6.11.10, 8.10.2.2.2(cc)(3)(c)(2),~~)) 8.10.2.2.2(ss), and ((~~8.6.4.19.12b~~)) 8.6.4.19.12.

8.6.1.2.2 On-Site Documentation. The following documents specified in 8.6.1.2.2(a), (b), and (c) shall be written and permanently kept on-site in the machine room, machinery space, control room, ((~~control space, or the means necessary for test (2.7.6.4)~~)) in hard copy for each unit for elevator personnel.

DRAFT

The documentation specified in 8.6.1.2.2(d) shall be on-site and available to the specified personnel.

(a) Up-to-date wiring diagrams detailing circuits of all electrical protective devices (see 2.26.2) and critical operating circuits (see 2.26.3).

(b) Procedures for inspections and tests not described in ASME A17.2 and procedures or methods required for elevator personnel to perform maintenance, repairs, replacements, and adjustments, as follows:

(1) all procedures specifically identified in the Code as required to be written (e.g., 8.6.4.20.8, check out procedure for leveling; 8.6.5.16.5, check out procedure for overspeed valve; and 8.6.8.15.7, check out procedure for reversal stop switch, etc.)

(2) unique maintenance procedures or methods required for inspection, tests, and replacement of SIL rated E/E/PES electrical protective devices and circuits. See 2.26.4.3.2, 2.26.9.3.2(b), 1.2.26.9.5.1(b), and 2.26.9.6.1(b)

(3) unique maintenance procedures or methods required for inspection, tests, and replacement of equipment applied under alternative arrangements (see 1.2.2.1) shall be provided by the manufacturer or installer

(4) unique maintenance procedures or unique methods required for inspection and test of equipment specified in an ASME A17.7/CSA B44.7, Code Compliance Document (CCD)

(c) Written checkout procedures

(1) to demonstrate E/E/PES function as intended (see 8.6.4.19.10)

(2) for elevator leveling speed with open doors (see 8.6.4.20.8)

(3) for hydraulic elevator overspeed valve (see 8.6.5.16.5)

(4) for escalator reversal stopping device (see 8.6.8.15.7)

(5) for escalator handrail retarding force (see 8.6.8.15.13)

(d) Written procedures for the following:

(1) Evacuation procedures for elevators by authorized persons and emergency personnel shall be available on-site (see 8.6.11.5.2 and ASME A17.4)

(2) the procedure for cleaning of a car and hoistway transparent enclosures by authorized persons (see 8.6.11.4.2)

8.6.1.3 Maintenance Personnel. Maintenance, repairs, replacements, and tests shall be performed only by elevator personnel (see 1.3)

8.6.1.4 Maintenance Records. Maintenance records shall document compliance with 8.6. Instructions for locating the maintenance records of each unit, for viewing on-site, shall be posted on the controller or at the means necessary for test (see 2.7.6.4). The provided instructions shall be permanently legible with characters a minimum of 3 mm (0.125 in.) in height. These records shall be retained for the most recent 5 yr or from the date of installation or adoption of this Code edition, whichever is less or as specified by the authority having jurisdiction. Existing maintenance records up to 5 yr shall be retained.

8.6.1.4.1 On-Site Maintenance Records

(a) Maintenance Control Program Records

(1) A record that shall include the maintenance tasks listed with the associated requirements of 8.6 identified in the Maintenance Control Program (8.6.1.2.1), other tests (see 8.6.1.2.2), examinations and adjustments, and the specified scheduled intervals shall be maintained.

(2) The specified scheduled maintenance intervals (see 1.3) shall, as applicable, be based on the criteria given in 8.6.1.2.1(e).

(3) MCP records shall be viewable on-site by elevator personnel in ((~~either~~)) hard copy ((~~or electronic format acceptable to the authority having jurisdiction~~)) and shall include but not limited to the following:

(a) site name and address

(b) service provider name

(c) conveyance identification (I.D.) and type

(d) date of record

(e) a description of the maintenance task, interval, and associated requirements of 8.6

(f) indication of completion of maintenance task

DRAFT

NOTE: [8.6.1.4.1(a)]: Recommended format for documenting Maintenance Control Program records can be found in Nonmandatory Appendix Y. This is only an example format. A specific maintenance control program that includes all maintenance needs is required for each unit.

(b) *Repair and Replacement Records.* The following repairs and replacements shall be recorded and shall be kept on-site for viewing by elevator personnel in ((~~either~~)) hard copy. ((~~or electronic format. Instructions for locating the records of each unit for immediate viewing shall be posted on the controller or at the means necessary for test (see 2.7.6.4).~~)) Records in electronic format may be provided if approved by the *building official.* The provided instructions shall be permanently legible with characters a minimum of 3 mm (0.125 in) in height. The record shall include an explanation of the repair or replacement, date, and name of person(s) and/or firm performing the task. The record of repairs and replacements shall be retained by the owner of the equipment for the most recent 5 yr or from the date of installation or adoption of this Code edition, whichever is less or as specified by the authority having jurisdiction and shall be a permanent record for the installation. ((~~These records may be kept remotely from the site.~~))

(1) Repairs (8.6.2.1 through 8.6.2.5) including repairs of components and devices listed in 8.6.4, 8.6.5, 8.6.6, 8.6.7, 8.6.8, 8.6.9, and 8.6.10.

(2) Replacements (8.6.3.1 through 8.6.3.11 except 8.6.3.7 and 8.6.3.10) including replacements of components and devices listed in 8.6.4, 8.6.5, 8.6.6, 8.6.7, 8.6.8, 8.6.9, and 8.6.10.

(c) *Other Records.* The following written records shall be kept on-site for each unit. Instruction for locating the records of each unit for immediate viewing shall be posted on the controller or at the means necessary for test (see 2.7.6.4). The provided instructions shall be permanently legible with characters a minimum of 3 mm (0.125 in.) in height. These records shall be retained for the most recent 5 yr from of the date of installation or adoption of this Code edition, whichever is less or as specified by the authority having jurisdiction. The record shall include the date and name of person(s) and/or firm performing the task.

(1) A record of oil usage (8.6.5.7).

(2) A record of findings for firefighters' service operation required by 8.6.11.1 with identification of the person(s) that performed the operation.

(3) Periodic tests (see 8.6.1.7) shall be documented or recorded in accordance with 8.6.1.7.2.

(4) Written record to document compliance with replacement criteria specified in ASME A17.6 requirement 1.10.1.1(c).

(d) Permanent Record. A permanent record of the results of all acceptance tests as required by 8.10.1.1.4 and 8.10.1.1.5 shall be kept with the on-site records.

Test tags, complying with 2.16.3.3 for marking plates (except lettering shall be 1.6 mm [0.0625 in]), permanently attached to or adjacent to the controller, shall meet this requirement.

DRAFT

NOTE: This requirement does not apply to equipment installed under ASME A17.1-2010 and earlier editions.

8.6.1.4.2 Call Backs (Trouble Calls). A record of call backs shall be maintained and shall include the description of reported troubles, dates, time, and corrective action(s) taken that are reported by any means to elevator personnel. These records shall be made available to elevator personnel when performing corrective action. For elevator personnel other than personnel performing the corrective action, records will be available upon request. Instructions on how to report any need for corrective action (trouble calls) to the responsible party shall be posted on the controller or at the means necessary for test (see 2.7.6.4). The instructions shall be permanently legible with characters a minimum of 3 mm (0.125 in.) in height.

3029.2 Remote Monitoring and Operation Elevators and other conveyances found operating with a device that can directly effect a change in its controls from a remote location is prohibited unless it is operated under the direct on-site supervision of a person who is a licensed elevator mechanic in accordance with Section 3003.2.

NOTE: Remote operation controls, operated by building personnel located within the building, may be installed for security purposes upon prior approval of the *building official.*

CHAPTER 31

SPECIAL CONSTRUCTION

User notes:

About this chapter: *Chapter 31 provides regulations for unique buildings and building elements. Those include buildings such as membrane structures, greenhouses and relocatable buildings. Special elements include pedestrian walkways and tunnels, awnings, canopies and marquees, vehicular gates and solar energy systems.*

Code development reminder: *Code change proposals to sections preceded by the designation [BS] will be considered by the IBC—Structural Code Development Committee during the 2019 (Group B) Code Development Cycle. See explanation on page iv.*

SECTION 3101
GENERAL

3101.1 Scope. The provisions of this chapter shall govern special building construction including membrane structures, temporary structures, *pedestrian walkways* and tunnels, automatic *vehicular gates, awnings* and *canopies, marquees,* signs, towers, antennas, relocatable buildings, swimming pool enclosures and safety devices, and solar energy systems and fixed guideway transit and passenger rail systems.

SECTION 3102
MEMBRANE STRUCTURES

3102.1 General. The provisions of Sections 3102.1 through 3102.8 shall apply to air-supported, air-inflated, membrane-covered cable, membrane-covered frame and *tensile membrane structures*, collectively known as membrane structures, erected for a period of 180 days or longer. Those erected for a shorter period of time shall comply with the *International Fire Code*. Membrane structures covering water storage facilities, water clarifiers, water treatment plants, sewage treatment plants, greenhouses and similar facilities not used for human occupancy are required to meet only the requirements of Sections 3102.3.1 and 3102.7. Membrane structures erected on a building, balcony, deck or other structure for any period of time shall comply with this section.

3102.2 Tensile membrane structures and air-supported structures. Tensile membrane structures and air-supported structures, including permanent and temporary structures, shall be designed and constructed in accordance with ASCE 55. The provisions in Sections 3102.3 through 3102.6 shall apply.

[W] 3102.3 Type of construction. Noncombustible membrane structures shall be classified as Type IIB construction. Noncombustible frame or cable-supported structures covered by an approved membrane in accordance with Section 3102.3.1 shall be classified as Type IIB construction. Heavy timber frame-supported structures covered by an *approved* membrane in accordance with Section 3102.3.1 shall be classified as Type IV-HT construction. Other membrane structures shall be classified as Type V construction.

Exception: Plastic less than 30 feet (9144 mm) above any floor used in greenhouses, where occupancy by the general public is not authorized, and for aquaculture pond covers is not required to meet the fire propagation performance criteria of Test Method 1 or Test Method 2, as appropriate, of NFPA 701.

3102.3.1 Membrane and interior liner material. Membranes and interior liners shall be either noncombustible as set forth in Section 703.5 or meet the fire propagation performance criteria of Test Method 1 or Test Method 2, as appropriate, of NFPA 701 and the manufacturer's test protocol.

Exception: Plastic less than 20 mil (0.5 mm) in thickness used in greenhouses, where occupancy by the general public is not authorized, and for aquaculture pond covers is not required to meet the fire propagation performance criteria of Test Method 1 or Test Method 2, as appropriate, of NFPA 701.

3102.4 Allowable floor areas. The area of a membrane structure shall not exceed the limitations specified in Section 506.

3102.5 Maximum height. Membrane structures shall not exceed one story nor shall such structures exceed the height limitations in feet specified in Section 504.3.

Exception: Noncombustible membrane structures serving as roofs only.

3102.6 Mixed construction. Membrane structures shall be permitted to be utilized as specified in this section as a portion of buildings of other types of construction. Height and area limits shall be as specified for the type of construction and occupancy of the building.

DRAFT

3102.6.1 Noncombustible membrane. A noncombustible membrane shall be permitted for use as the roof or as a skylight of any building or atrium of a building of any type of construction provided that the membrane is not less than 20 feet (6096 mm) above any floor, balcony or gallery.

[W] 3102.6.1.1 Membrane. A membrane meeting the fire propagation performance criteria of Test Method 1 or Test Method 2, as appropriate, of NFPA 701 shall be permitted to be used as the roof or as a skylight on buildings of Type IIB, III, IV-HT and V construction, provided that the membrane is not less than 20 feet (6096 mm) above any floor, balcony or gallery.

3102.7 Engineering design. The structure shall be designed and constructed to sustain dead loads; loads due to tension or inflation; live loads including wind, snow or flood and seismic loads and in accordance with Chapter 16.

3102.7.1 Lateral restraint. For membrane-covered frame structures, the membrane shall not be considered to provide lateral restraint in the calculation of the capacities of the frame members.

3102.8 Inflation systems. Air-supported and air-inflated structures shall be provided with primary and auxiliary inflation systems to meet the minimum requirements of Sections 3102.8.1 through 3102.8.3.

3102.8.1 Equipment requirements. The inflation system shall consist of one or more blowers and shall include provisions for automatic control to maintain the required inflation pressures. The system shall be so designed as to prevent overpressurization of the system.

3102.8.1.1 Auxiliary inflation system. In addition to the primary inflation system, in buildings larger than 1,500 square feet (140 m^2) in area, an auxiliary inflation system shall be provided with sufficient capacity to maintain the inflation of the structure in case of primary system failure. The auxiliary inflation system shall operate automatically when there is a loss of internal pressure and when the primary blower system becomes inoperative.

3102.8.1.2 Blower equipment. Blower equipment shall meet all of the following requirements:

1. Blowers shall be powered by continuous-rated motors at the maximum power required for any flow condition as required by the structural design.
2. Blowers shall be provided with inlet screens, belt guards and other protective devices as required by the *building official* to provide protection from injury.
3. Blowers shall be housed within a weather-protecting structure.
4. Blowers shall be equipped with backdraft check dampers to minimize air loss when inoperative.
5. Blower inlets shall be located to provide protection from air contamination. The location of inlets shall be *approved*.

[S] 3102.8.2 ((~~Standby~~)) Legally required standby power. Wherever an auxiliary inflation system is required, an *approved* legally required standby power ((~~generating~~)) system shall be provided. The system shall be equipped with a suitable means for automatically starting the generator set upon failure of the normal electrical service and for automatic transfer and operation of all of the required electrical functions at full power within 60 seconds of such service failure. ((~~Standby~~)) The legally required standby power system shall be capable of operating independently for not less than 4 hours.

3102.8.3 Support provisions. A system capable of supporting the membrane in the event of deflation shall be provided for in air-supported and air-inflated structures having an *occupant load* of 50 or more or where covering a swimming pool regardless of *occupant load*. The support system shall be capable of maintaining membrane structures used as a roof for Type I construction not less than 20 feet (6096 mm) above floor or seating areas. The support system shall be capable of maintaining other membranes not less than 7 feet (2134 mm) above the floor, seating area or surface of the water.

SECTION 3103
TEMPORARY STRUCTURES

[S] 3103.1 ((~~General.~~ ~~The provisions of Sections 3103.1 through 3103.4 shall apply to structures erected for a period of less than 180 days. Tents, umbrella structures and other membrane structures erected for a period of less than 180 days shall comply with the *International Fire Code*. Those erected for a longer period of time shall comply with applicable sections of this code.~~)) See Section 106.13.

[S] ((~~3103.1.1 Conformance.~~ ~~Temporary structures and uses shall conform to the structural strength, fire safety, *means of egress*, accessibility, light, ventilation and sanitary requirements of this code as necessary to ensure public health, safety and general welfare.~~))

[S] ((~~3103.1.2 Permit required.~~ ~~Temporary structures that cover an area greater than 120 square feet (11.16 m^2), including connecting areas or spaces with a common *means of egress* or entrance that are used or intended to be used for the gathering together of 10 or more persons, shall not be erected, operated or maintained for any purpose without obtaining a *permit* from the *building official*.~~))

DRAFT

[S] ((~~3103.2 Construction documents.~~ ~~A *permit* application and *construction documents* shall be submitted for each installation of a temporary structure. The *construction documents* shall include a site plan indicating the location of the temporary structure and information delineating the *means of egress* and the *occupant load*.~~))

[S] ((~~3103.3 Location.~~ ~~Temporary structures shall be located in accordance with the requirements of Table 602 based on the *fire-resistance rating* of the *exterior walls* for the proposed type of construction.~~))

[S] ((~~3103.4 Means of egress.~~ ~~Temporary structures shall conform to the *means of egress* requirements of Chapter 10 and shall have an *exit access* travel distance of 100 feet (30 480 mm) or less.~~))

SECTION 3104
PEDESTRIAN WALKWAYS AND TUNNELS

3104.1 General. This section shall apply to connections between buildings such as *pedestrian walkways* or tunnels, located at, above or below grade level, that are used as a means of travel by persons. The *pedestrian walkway* shall not contribute to the *building area* or the number of *stories* or height of connected buildings.

3104.1.1 Application. Pedestrian walkways shall be designed and constructed in accordance with Sections 3104.2 through 3104.9. Tunnels shall be designed and constructed in accordance with Sections 3104.2 and 3104.10.

3104.2 Separate structures. Buildings connected by *pedestrian walkways* or tunnels shall be considered to be separate structures.

Exceptions:

1. Buildings that are on the same lot and considered as portions of a single building in accordance with Section 503.1.2.
2. For purposes of calculating the number of Type B units required by Chapter 11, structurally connected buildings and buildings with multiple wings shall be considered to be one structure.

3104.3 Construction. The *pedestrian walkway* shall be of noncombustible construction.

Exceptions:

1. Combustible construction shall be permitted where connected buildings are of combustible construction.
2. *Fire-retardant-treated wood*, in accordance with Section 603.1, Item 1.3, shall be permitted for the roof construction of the *pedestrian walkway* where connected buildings are not less than Type I or II construction.

3104.4 Contents. Only materials and decorations *approved* by the *building official* shall be located in the *pedestrian walkway*.

3104.5 Connections of pedestrian walkways to buildings. The connection of a *pedestrian walkway* to a building shall comply with Section 3104.5.1, 3104.5.2, 3104.5.3 or 3104.5.4.

Exception: Buildings that are on the same lot and considered as portions of a single building in accordance with Section 503.1.2.

3104.5.1 Fire barriers. *Pedestrian walkways* shall be separated from the interior of the building by not less than 2-hour *fire barriers* constructed in accordance with Section 707 and Sections 3104.5.1.1 through 3104.5.1.3.

3104.5.1.1 Exterior walls. Exterior walls of buildings connected to *pedestrian walkways* shall be 2-hour fire-resistance rated. This protection shall extend not less than 10 feet (3048 mm) in every direction surrounding the perimeter of the pedestrian walkway.

3104.5.1.2 Openings in exterior walls of connected buildings. Openings in exterior walls required to be fire-resistance rated in accordance with Section 3104.5.1.1 shall be equipped with opening protectives providing a not less than 3/4-hour *fire protection rating* in accordance with Section 716.

3104.5.1.3 Supporting construction. The fire barrier shall be supported by construction as required by Section 707.5.1.

3104.5.2 Alternative separation. The wall separating the *pedestrian walkway* and the building shall comply with Section 3104.5.2.1 or 3104.5.2.2 where:

1. The distance between the connected buildings is more than 10 feet (3048 mm).
2. The *pedestrian walkway* and connected buildings are equipped throughout with an *automatic sprinkler system* in accordance with Section 903.3.1.1, and the roof of the walkway is not more than 55 feet (16 764 mm) above grade connecting to the fifth, or lower, story above grade plane, of each building.

   Exception: Open parking garages need not be equipped with an automatic sprinkler system.

3104.5.2.1 Passage of smoke. The wall shall be capable of resisting the passage of smoke.

3104.5.2.2 Glass. The wall shall be constructed of a tempered, wired or laminated glass and doors separating the interior of the building from the pedestrian walkway. The glass shall be protected by an *automatic sprinkler system* in accordance with Section 903.3.1.1 that, when actuated, shall completely wet the entire surface of interior sides of the wall or glass. Obstructions shall not be installed between the sprinkler heads and the wall or glass. The glass shall be in a gasketed frame

DRAFT

and installed in such a manner that the framing system will deflect without breaking (loading) the glass before the sprinkler operates.

3104.5.3 Open sides on walkway. Where the distance between the connected buildings is more than 10 feet (3048 mm), the walls at the intersection of the *pedestrian walkway* and each building need not be fire-resistance rated provided that both sidewalls of the pedestrian walkway are not less than 50 percent open with the open area uniformly distributed to prevent the accumulation of smoke and *toxic* gases. The roof of the walkway shall be located not more than 40 feet (12 160 mm) above grade plane, and the walkway shall only be permitted to connect to the third or lower story of each building.

Exception: Where the *pedestrian walkway* is protected with a sprinkler system in accordance with Section 903.3.1.1, the roof of the walkway shall be located not more than 55 feet (16 764 mm) above grade plane and the walkway shall only be permitted to connect to the fifth or lower story of each building.

3104.5.4 Exterior walls greater than 2 hours. Where *exterior walls* of connected buildings are required by Section 705 to have a *fire-resistance rating* greater than 2 hours, the walls at the intersection of the pedestrian walkway and each building need not be fire-resistance rated provided:

1. The *pedestrian walkway* is equipped throughout with an *automatic sprinkler system* installed in accordance with Section 903.3.1.1.
2. The roof of the walkway is not located more than 55 feet (16 764 mm) above grade plane and the walkway connects to the fifth, or lower, story above grade plane of each building.

[S] 3104.6 Public way. *Pedestrian walkways* over a *public way* shall comply with Chapter 32 and the Street Use Ordinance, *Seattle Municipal Code* Title 15.

3104.7 Egress. Access shall be provided at all times to a *pedestrian walkway* that serves as a required *exit*.

3104.8 Width. The unobstructed width of *pedestrian walkways* shall be not less than 36 inches (914 mm). The total width shall be not greater than 30 feet (9144 mm).

3104.9 Exit access travel. The length of *exit access* travel shall be 200 feet (60 960 mm) or less.

Exceptions:

1. *Exit access* travel distance on a *pedestrian walkway* equipped throughout with an *automatic sprinkler system* in accordance with Section 903.3.1.1 shall be 250 feet (76 200 mm) or less.
2. *Exit access* travel distance on a *pedestrian walkway* constructed with both sides not less than 50 percent open shall be 300 feet (91 440 mm) or less.
3. *Exit access* travel distance on a *pedestrian walkway* constructed with both sides not less than 50 percent open, and equipped throughout with an *automatic sprinkler system* in accordance with Section 903.3.1.1, shall be 400 feet (122 m) or less.

3104.10 Tunneled walkway. Separation between the tunneled walkway and the building to which it is connected shall be not less than 2-hour fire-resistant construction and openings therein shall be protected in accordance with Section 716.

DRAFT

SECTION 3105
AWNINGS AND CANOPIES

[S] ((~~3105.1 General.~~ ~~*Awnings* and *canopies* shall comply with the requirements of Sections 3105.2 and 3105.3 and other applicable sections of this code.~~))

[S] ((~~3105.2 Design and construction.~~ ~~*Awnings* and *canopies* shall be designed and constructed to withstand wind or other lateral loads and live loads as required by Chapter 16 with due allowance for shape, open construction and similar features that relieve the pressures or loads. Structural members shall be protected to prevent deterioration. *Awnings* shall have frames of noncombustible material, *fire-retardant-treated wood*, heavy timber complying with Section 2304.11, or 1-hour construction with combustible or noncombustible covers and shall be either fixed, retractable, folding or collapsible.~~))

[S] ((~~3105.3 Awnings and canopy materials.~~ ~~Awnings and *canopies* shall be provided with an *approved* covering that complies with one of the following:~~

~~1. The fire propagation performance criteria of Test Method 1 or Test Method 2, as appropriate, of NFPA 701.~~
~~2. Has a flame spread index not greater than 25 when tested in accordance with ASTM E84 or UL 723.~~
~~3. Meets all of the following criteria when tested in accordance with NFPA 286:~~
   ~~3.1. During the 40 kW exposure, flames shall not spread to the ceiling.~~
   ~~3.2. Flashover, as defined in NFPA 286, shall not occur.~~
   ~~3.3. The flame shall not spread to the outer extremity of the sample on any wall or ceiling.~~
   ~~3.4. The peak heat release rate throughout the test shall not exceed 800 kW.~~

~~**Exception:** The fire propagation performance and flame spread index requirements shall not apply to awnings installed on detached one- and two-family dwellings.~~))

door or opening used as a *means of egress*, or so as to prevent free passage from one part of a roof to any other part of a roof. No *awning*, *canopy*, or portion thereof shall be attached in any form, shape or manner to a fire escape or standpipe, nor be placed in any manner that interferes with any opening providing ventilation or light required by Chapter 12 of this *Code*.

[S] 3105.9 Location. All portions of *awnings* and *canopies* shall be at least 8 feet (2438 mm) above any walking surface immediately below. All portions of *awnings* and *canopies* located over public property shall be at least 8 feet (2438 mm) above grade and at least 2 feet (610 mm) from the curb. *Awnings* and *canopies* shall be located where they will not obstruct, obscure or interfere with any publicly maintained street tree, streetlight or utility pole.

[S] 3105.10 Supports. The supports for *awnings* and *canopies* shall be located on private property.

Exception: Where approved by the Director of Transportation, stanchions for *awnings* located at the entrance to buildings are permitted to be installed on public property if they are located in line with other street furniture. Individual stanchions shall have a cross sectional dimension or diameter no greater than 6 inches (152 mm).

[S] 3105.11 Drainage.

[S] 3105.11.1 Awning drainage. *Awnings* shall shed water uniformly from the *awning* covering.

[S] 3105.11.2 Canopy drainage. *Canopies* draining away from the *building line* shall shed water uniformly over the *canopy* edge. The upper surface of a *canopy* shall be sloped a minimum of 1 unit vertical in 48 units horizontal (2% slope). Approval shall be obtained from the Director of Public Utilities when a *canopy* drains back toward the building and is connected to an infiltration facility, a side sewer or is conveyed under a sidewalk to a gutter.

[S] 3105.12 Design loads. *Awnings* and *canopies* shall be designed and constructed to resist all forces to which they are subject as specified in Chapter 16. Where signs, *electric signs* or luminaires are attached to an *awning* or *canopy* structure, the additional load of all attachments shall be included in the design loads and shall comply with the requirements of Chapter 16 and Section 3107.10.1 of this *Code*.

[S] 3105.13 Pitch. The upper surface of all *awnings* shall have a pitch of at least 30 degrees (0.52 rad) from the horizontal. The *building official* is authorized to approve *awnings* with a smaller pitch when the design is prepared by a licensed structural engineer.

[S] 3105.14 Attachment of awnings and canopies. All *awnings* and *canopies* attached to masonry, concrete, aluminum, or steel shall be safely secured with steel anchors and bolts, or approved expansion bolts of sufficient size and anchorage to support the loads safely. No support or attachment for an *awning* or *canopy* shall be connected to, supported by, or fastened to exterior veneer.

[S] 3105.15 Size. Where an *awning* or *canopy* is located at an exit door from a stairway or *exit passageway* that is fire-resistance rated, the distance the *awning* or *canopy* projects from the building shall be no more than one-half the distance from the walking surface to the lowest point of the bottom of the *awning* or *canopy*.

[S] 3105.16 Approved materials. The *building official* may require that sufficient technical data be submitted to substantiate the proposed *use* of any material; and may approve *use* of the material if the *building official* determined that the evidence submitted is satisfactory for the intended *use*.

[S] 3105.17 Inspections. All *awnings* and *canopies* regulated by this chapter are subject to inspection by the *building official*. The permit holder must request a final inspection within 3 business days of completing the installation.

[S] 3105.18 Footing or foundation inspection. Footings or foundations for *awnings* and *canopies* are subject to inspection by the *building official*. An inspection must be requested and completed before the footing is filled.

[S] 3105.19 Electrical inspection. All electrical wiring is subject to the *Seattle Electrical Code*. Upon energizing any electrical elements, the permit holder must request an inspection within one business day.

SECTION 3106
MARQUEES

[S] 3106.1 General. ((~~Marquees shall comply with Sections 3106.2 through 3106.5 and other applicable sections of this code.~~)) *Marquees* are, by definition, a *canopy* and shall comply with Section 3105.

[S] ((~~**3106.2 Thickness.** The height or thickness of a marquee measured vertically from its lowest to its highest point shall be not greater than 3 feet (914 mm) where the marquee projects more than two-thirds of the distance from the *lot line* to the curb line, and shall be not greater than 9 feet (2743 mm) where the marquee is less than two-thirds of the distance from the lot line to the curb line.~~))

[S] ((~~**3106.3 Roof construction.** Where the roof or any part thereof is a skylight, the skylight shall comply with the requirements of Chapter 24. Every roof and skylight of a marquee shall be sloped to downspouts that shall conduct any drainage from the marquee in such a manner so as not to spill over the sidewalk.~~))

DRAFT

[S] ((~~3106.4 Location prohibited.~~ ~~Every marquee shall be so located as not to interfere with the operation of any exterior standpipe, and such that the marquee does not obstruct the clear passage of *stairways* or *exit discharge* from the building or the installation or maintenance of street lighting.~~))

[S] ((~~3106.5 Construction.~~ ~~A marquee shall be supported entirely from the building and constructed of noncombustible materials. Marquees shall be designed as required in Chapter 16. Structural members shall be protected to prevent deterioration.~~))

SECTION 3107
SIGNS

[S] ((~~3107.1 General.~~ ~~Signs shall be designed, constructed and maintained in accordance with this code.~~))

[S] 3107.1 General. It is the purpose of this chapter to safeguard the life, health, property and welfare of people within the City by regulating and controlling the design, quality of materials, construction, location, illumination, and maintenance of signs and *sign structures* that are visible from any portion of public places and rights-of-way.

[S] 3107.2 Enforcement.

[S] 3107.2.1 Authority. The Director of Transportation and the *building official* shall enforce the provisions of this chapter as it relates to signs located over public places. "Public places" is defined in Section 15.02.046 of the *Seattle Municipal Code*, *Street and Sidewalk Use*. The *building official* shall enforce the provisions of this chapter as it relates to signs located over all other property in the City of Seattle.

[S] 3107.2.2 Other requirements. All signs shall comply with any additional sign regulations imposed by *Seattle Municipal Code* Title 23, *Land Use Code*, and Title 15, *Street Use Code*, and other City regulations, even when no permit is required. Signs having electrical wiring and light fixtures are subject to the requirements of the *Seattle Electrical Code*.

[S] 3107.3 Definitions

[S] 3107.3.1 Definitions – Building Code. The following definitions are found in Chapter 2 of this *Code*:

AWNING SIGN.

CANOPY SIGN.

DISPLAY SURFACE.

NONSTRUCTURAL TRIM.

PROJECTING SIGN.

PROJECTION.

SIGN STRUCTURE.

VENEER.

[S] 3107.3.2 Definitions – Land Use Code. The following sign-related definitions are found in the Seattle *Land Use Code* Chapter 23.84A:

ELECTRIC SIGN.

ON-PREMISES SIGN.

PROJECTING SIGN.

ROOF SIGN.

SIGN.

WALL SIGN.

[S] 3107.4 Permits.

[S] 3107.4.1 Permits required. Except as otherwise specifically provided in this section, a permit shall be obtained from the *building official* before any sign is erected, constructed, posted, applied, or altered.

A permit must be obtained for:

1. All signs viewable from public rights of way, except signs considered temporary signs by the *Land Use Code* Section 23.55.
2. All *electric signs*.
3. A new permit is required for existing signs when a different business entity uses the sign.
4. Any *display surface* greater than 5 square feet (0.46 m^2) in area.

DRAFT

5. Signs located within the interior of the building that are not visible from the public right-of-way when:
   5.1. The sign is mounted within the interior of a covered or open mall of a multi-tenant retail facility and the sign is located over or adjoining the pedestrian walking surface; or
   5.2. When the sign is greater than 5 square feet (0.46 m^2) in area; or
   5.3 When it is an *electric sign*.
6. Existing signs that are removed and reinstalled.
7. Signs that are refurbished, retro-fitted, relocated or field-assembled.

[S] 3107.4.2 Work exempt from permit. A sign permit is not required for:

1. Changes made to the message copy installed on the *display surface* of a sign when the *sign structure* is lawfully erected and is specifically designed for using manually replaceable copy.
2. Maintenance which is limited to painting, repainting, cleaning and minor repairs.
3. Signs for public facilities that indicate danger or that provide service or safety information and are not greater than 24 square feet (2.23 square meters).

[S] 3107.4.3 Temporary signs. The erection, re-erection, construction, posting or placement of temporary signs that are allowed by Section 23.55.012 of the *Land Use Code* do not require a sign permit. The owner of a temporary sign is responsible for compliance with the provisions of this section and other applicable laws or codes regulating signs, and for the removal of any temporary sign at the end of the allowed term. Failure to comply with the requirements of either this *Code* or the *Land Use Code* is a violation and subject to the provisions of Section 103 of this *Code* and the provisions of Chapter 23.91 of the *Land Use Code.*

[S] 3107.4.4 Maximum number of signs. Temporary signs allowed by Section 23.55.012 of the *Land Use Code* and signs not requiring a permit as specified in Section 3107.4.1 of this *Code* are not counted as part of the maximum number of signs allowed under Chapter 23.55 of the *Land Use Code*.

[S] 3107.4.5 Attachments to signs. Ancillary devices, displays and attachments, that are not part of the original sign design for which a permit was issued, shall not be added to an existing sign except as provided Chapter 23.55 of the *Land Use Code* and requires a new permit issued by the *building official*.

Where ancillary devices, displays, *electric signs* or luminaires are attached to a *sign structure*, the additional load of all attachments shall be included in the design loads and shall comply with the requirements of Chapter 16 and Section 3107.10 of this *Code*.

[S] 3107.5 Permit application. To obtain a sign permit, the applicant shall submit an application to the Department which provides the following information:

1. The address of the proposed sign installation;
2. Specifications, plans and drawings of the structure, site and vicinity, and a numbering system that identifies the placement of each proposed sign on the elevation and plan view drawings;
3. Signature, contact information and City business license number of the building owner;
4. Signature, contact information and City business license number of the business establishment served by the sign or *awning sign*;
5. Signature, contact information, City business license number, and State contractor or electrical contractor license number of the installer;
6. Electrical connection and illumination information when the sign has electrical components; and
7. Permit fee as specified in the *Fee Subtitle*.

Note: Electrical permits are required for *electric signs* pursuant to the *Seattle Electrical Code*, and street use permits shall be obtained from the Department of Transportation for signs over any public place pursuant to the *Street Use Code*. Review and approval by the Department of Neighborhoods is required for signs located on the site of a *historic building*, or in a *landmark* or special review district.

[S] 3107.6 Inspections. All signs regulated by this chapter are subject to inspection by the *building official*, including sign footings, refurbished or relocated used signs and retrofitted and field-assembled signs. The permit holder must request a final inspection within 3 business days of completing the installation. The *building official* may require an inspection of any temporary sign to ensure public safety.

[S] 3107.6.1 Electrical sign inspection. All electrical wiring is subject to the *Seattle Electrical Code.* Upon energizing an *electrical sign*, the permit holder must request an inspection within one business day.

DRAFT

[S] 3107.6.2 Sign footing inspection. Footings for all signs greater than 5 square feet (0.46 m^2) in area require a footing inspection. An inspection must be requested and completed before the footing is filled.

[S] 3107.7 Maintenance and closure of business.

[S] 3107.7.1 Maintenance. The owners of signs shall maintain their signs, together with all supports, braces, guys and anchors, in good repair and in a proper state of preservation. The owners shall keep *display surfaces* of all signs neatly painted or posted at all times. Failure to maintain any sign, *display surface* or *sign structure* and the component parts is a violation and subject to the provisions of Section 103 of this *Code*.

[S] 3107.7.2 Closure of business and abandoned signs. Upon the closure and vacation of a business or activity, the operator of the business or activity is responsible for removing all related signs within 90 days from the date of closure. If the operator fails to remove any sign and the business or activity is not resumed during the 90-day period, then the owner of the premises upon which the signs are located is responsible and must remove all signs within 180 days from the date of closure and vacation of the business or activity.

Note: A new permit is required for existing signs when a different business entity uses the sign. See Section 3107.4.

[S] 3107.8 Nonconforming signs. Maintenance to keep a nonconforming sign in good condition is required. Minor structural or electrical additions or alterations deemed to be necessary for public safety may be authorized by the *building official*. A nonconforming sign, for the purpose of this C*ode*, is a sign or any portion of a sign which, because of its location or construction, could not lawfully be reconstructed in its present location.

[S] 3107.9 General requirements.

[S] 3107.9.1 General. All signs shall conform to the requirements of this section.

[S] 3107.9.2 Clearance from overhead electrical conductors. Signs shall be located no closer than 3 feet (914 mm) horizontally or 8 feet (2438 mm) vertically from overhead electrical conductors which are energized at 1000 volts or less and not less than 10 feet (3048 mm) in any direction from overhead conductors energized at more than 1000 volts.

Exception: Overhead conductors enclosed in an approved raceway or enclosure.

[S] 3107.9.3 Clearance from fire escapes, exits or standpipes. No sign or *sign structure* shall be erected in such a manner that any portion of its surface or supports will interfere in any way with the free use of any fire escape, exit or standpipe.

[S] 3107.9.4 Obstruction of exits, light and ventilation. No portion of the surface or support of any sign shall be erected, constructed or maintained so as to obstruct any fire escape or standpipe, or any window, door or opening used as a *means of egress*, or so as to prevent free passage from one part of a roof to any other part of the roof. No sign, or portion of a sign, shall be attached in any form, shape or manner to a fire escape or standpipe, nor be placed in such a manner as to interfere with any opening providing the ventilation or light required by Chapter 12 of this *Code*.

[S] 3107.9.5 Supporting members. Signs mounted on and attached to buildings shall be so designed and mounted that secondary structural members shall be incorporated into and become a part of the sign display. Exterior bracing such as angle irons, guy wires, cables and similar devices are permitted only where no other reasonable method of fastening consistent with safety is possible.

[S] 3107.9.6 Non-display surfaces. If a sign is visible from more than one direction, all areas not intended as a *display surface* including the back and sides, shall be designed so the non-*display surfaces* are given a finished appearance and the *display surface* is visible only from the direction that it is intended to be seen.

[S] 3107.9.7 Electrical permit sticker. Each *electrical sign* shall display the electrical permit sticker issued with the sign permit. The sticker shall be located where it is clearly visible without use of a ladder and without requiring access into a building, unless otherwise authorized by the *building official*.

[S] 3107.9.8 Labels. Every permanent sign shall display the name of the sign erector or manufacturer. Electrical signs must display listing labels required by the *Seattle Electrical Code*.

[S] 3107.10 Design.

[S] 3107.10.1 General. Signs and *sign structures* shall be designed and constructed to resist all forces to which they are subject as specified in Chapter 16 and this section. All signs shall be designed and installed to transfer all forces directly to the structural frame of the building or structure. The overturning moment produced from lateral forces shall in no case exceed two-thirds of the dead load resisting moment. Uplifts due to overturning shall be adequately resisted by proper anchorage to the ground or to the structural frame of the building. The weight of earth superimposed over footings is permitted to be used in determining the dead load resisting moment. Such earth shall be carefully placed and thoroughly compacted.

[S] 3107.10.2 Wind and seismic loads. Signs and *sign structures* shall be designed and constructed to resist wind and seismic forces as specified in Chapter 16 of this *Code*.

DRAFT

[S] 3107.10.3 Allowable stresses. The design of wood, concrete, steel or aluminum members shall conform to the requirements of Chapters 19, 20, 22 and 23. Loads, both vertical and horizontal, exerted on the soil shall not produce stresses exceeding those specified in Chapter 16 of this *Code*. The working stresses of wire rope and its fastenings shall not exceed 25 percent of the ultimate strength of the rope or fasteners.

[S] 3107.11 Construction.

[S] 3107.11.1 General. The supports for all signs and *sign structures* shall be placed in or upon private property and shall be securely built, constructed, and erected in conformance with the requirements of this chapter. All structural welding on signs and *sign structures* shall conform to the requirements of Chapter 20 for aluminum and Chapter 22 for steel.

[S] 3107.11.2 Materials. Materials for construction of signs and *sign structures* shall be:

1. Of a quality and grade allowed by specific chapters in this *Code* for the materials proposed; or
2. Listed or rated for the proposed *use*; or
3. Approved by the *building official*.

[S] 3107.11.3 Approved materials. The *building official* may require that sufficient technical data be submitted to substantiate the proposed *use* of any material; and may approve *use* of the material when the *building official* determines that the evidence submitted is satisfactory for the intended *use*.

[S] 3107.11.4 Anchorage. Members supporting unbraced signs shall be so proportioned that the bearing loads imposed on the soil in either direction, horizontal or vertical, shall not exceed the design requirements.

Braced ground signs shall be anchored to resist the specified wind or seismic load acting in any direction. Anchors and supports shall be designed for safe bearing loads on the soil and for an effective resistance to pull-out amounting to a force 25 percent greater than the required resistance to overturning.

Signs attached to masonry, concrete or steel shall be safely and securely fastened thereto by means of metal anchors, bolts or approved expansion screws of sufficient size and anchorage to support safely the loads applied. No wooden blocks or plugs or anchors with wood used in connection with screws or nails is considered proper anchorage except in the case of signs attached to wood framing.

No lead plugs or anchors shall be used to support signs. No anchor or support of any sign shall be connected to or supported by an unbraced parapet wall unless the wall is designed or braced for the added forces.

[S] 3107.12 Roof signs.

[S] 3107.12.1 General. *Roof signs* shall be constructed of approved material as specified in Section 3107.11. The sign shall be secured and anchored to the structural frame of the building.

[S] 3107.12.2 Clear passage. A passage clear of all obstructions shall be left under or around, and immediately adjacent to, signs exceeding a height of 4 feet (1219 mm) above the roof. The passage shall not be less than 3 feet (914 mm) wide and 4 feet (1219 mm) high and shall be at parapet or roof level. There shall be one clear passage opening as follows:

1. One for each *roof sign*.
2. One for every 50 lineal feet (15 240 mm) of horizontally running *sign structure*.
3. Within 20 feet (6096 mm) of walls and parapets when *roof signs* are at right angles to a face of the building.

[S] 3107.13 Electrical signs.

[S] 3107.13.1 Construction. Structures supporting *electrical signs* shall comply with Section 3107.11 of this *Code*.

[S] 3107.13.2 Installation. Electrical signs and branch circuits supplying power to *electric signs* shall be installed in accordance with the Article 600 of the *Seattle Electrical Code*.

[S] 3107.13.3 Inspections. The permit holder must request a final inspection within 3 business days of completing the installation or within one business day upon energizing an *electrical sign*.

SECTION 3108
TELECOMMUNICATION AND BROADCAST TOWERS

[BS] 3108.1 General. Towers shall be designed and constructed in accordance with the provisions of TIA-222. Towers shall be designed for seismic loads; exceptions related to seismic design listed in Section 2.7.3 of TIA-222 shall not apply. In Section 2.6.6.2 of TIA 222, the horizontal extent of Topographic Category 2, escarpments, shall be 16 times the height of the escarpment.

Exception: Single free-standing poles used to support antennas not greater than 75 feet (22 860 mm), measured from the top of the pole to grade, shall not be required to be noncombustible.

DRAFT

[BS] 3108.2 Location and access. Towers shall be located such that guy wires and other accessories shall not cross or encroach on any street or other public space, or over above-ground electric utility lines, or encroach on any privately owned property without the written consent of the owner of the encroached-upon property, space or above-ground electric utility lines. Towers shall be equipped with climbing and working facilities in compliance with TIA-222. Access to the tower sites shall be limited as required by applicable OSHA, FCC and EPA regulations.

SECTION 3109
SWIMMING POOLS, SPAS AND HOT TUBS

[S] 3109.1 General. The design and construction of swimming pools, spas and ((~~hot tubs~~)) other aquatic recreation facilities shall comply with the *International Swimming Pool and Spa Code*, ((~~.~~)) where the facility is one of the following:

1. For the sole use of residents and invited guests at a single-family *dwelling*;
2. For the sole use of residents and invited guests of a duplex owned by the residents;
3. Operated exclusively for physical therapy or rehabilitation and under the supervision of licensed medical practitioner.

All other "water recreation facilities" as defined in RCW 70.90.110 are regulated under chapters 246-260 and 246-262 WAC.

SECTION 3110
AUTOMATIC VEHICULAR GATES

3110.1 General. *Automatic vehicular gates* shall comply with the requirements of Sections 3110.2 and 3110.3 and other applicable sections of this code.

3110.2 Vehicular gates intended for automation. *Vehicular gates* intended for automation shall be designed, constructed and installed to comply with the requirements of ASTM F2200.

3110.3 Vehicular gate openers. *Vehicular gate* openers, where provided, shall be *listed* in accordance with UL 325.

DRAFT

SECTION 3111
SOLAR ENERGY SYSTEMS

3111.1 General. Solar energy systems shall comply with the requirements of this section.

3111.1.1 Wind resistance. Rooftop-mounted photovoltaic panels and modules and solar thermal collectors shall be designed in accordance with Section 1609.

3111.1.2 Roof live load. Roof structures that provide support for solar energy systems shall be designed in accordance with Section 1607.13.5.

3111.2 Solar thermal systems. Solar thermal systems shall be designed and installed in accordance with Section 2606.12, the *International Plumbing Code*, the *International Mechanical Code* and the *International Fire Code.*

3111.2.1 Equipment. Solar thermal systems and components shall be *listed* and *labeled* in accordance with ICC 900/SRCC 300 and ICC 901/SRCC 100.

3111.3 Photovoltaic solar energy systems. Photovoltaic solar energy systems shall be designed and installed in accordance with this section, the *International Fire Code*, NFPA 70 and the manufacturer's installation instructions.

3111.3.1 Equipment. Photovoltaic panels and modules shall be *listed* and *labeled* in accordance with UL 1703. Inverters shall be *listed* and *labeled* in accordance with UL 1741. Systems connected to the utility grid shall use inverters *listed* for utility interaction.

3111.3.2 Fire classification. Rooftop-mounted photovoltaic systems shall have a fire classification in accordance with Section 1505.9. Building-integrated photovoltaic systems shall have a fire classification in accordance with Section 1505.8.

3111.3.3 Building-integrated photovoltaic systems. Building-integrated photovoltaic systems that serve as roof coverings shall be designed and installed in accordance with Section 1507.18.

3111.3.4 Access and pathways. Roof access, pathways and spacing requirements shall be provided in accordance with Section 1204 of the *International Fire Code.*

3111.3.5 Ground-mounted photovoltaic systems. Ground-mounted photovoltaic systems shall be designed and installed in accordance with Chapter 16 and the *International Fire Code.*

3111.3.5.1 Fire separation distances. Ground-mounted photovoltaic systems shall be subject to the fire separation distance requirements determined by the local jurisdiction.

SECTION 3114
FIXED GUIDEWAY TRANSIT AND PASSENGER RAIL SYSTEMS

[W] 3114.1 Fixed guideway transit and passenger rail systems. Construction of fixed guideway transit and passenger rail systems shall be in accordance with NFPA 130-17, standard for fixed guideway transit and passenger rail systems.

3114.1 Means of egress. The means of egress for fixed guideway transit and passenger rail systems shall be in accordance with NFPA 130-17.

DRAFT

CHAPTER 32

ENCROACHMENTS INTO THE PUBLIC RIGHT-OF-WAY

User note:

About this chapter: *From time to time it is necessary or appropriate for a portion of a building to encroach onto an adjoining public right-of-way. Chapter 32 establishes parameters for such encroachments not only at grade but also above and below grade.*

SECTION 3201
GENERAL

3201.1 Scope. The provisions of this chapter shall govern the encroachment of structures into the public right-of-way.

3201.2 Measurement. The projection of any structure or portion thereof shall be the distance measured horizontally from the *lot line* to the outermost point of the projection.

3201.3 Other laws. The provisions of this chapter shall not be construed to permit the violation of other laws or ordinances regulating the use and occupancy of public property.

[S] ((~~3201.4 Drainage.~~ ~~Drainage water collected from a roof, *awning*, canopy or marquee, and condensate from mechanical equipment shall not flow over a public walking surface.~~))

[S] 3201.4 Approval of encroachments. All encroachments of buildings and structures on, over or under sidewalks, streets and other public places are subject to approval by the Director of Transportation and the *building official*. Encroachments shall comply with this code and other applicable codes including Seattle Municipal Code, Title 15.

[S] 3201.5 Doors and gates. No door or gate in any position shall project over public property.

[S] 3201.6 Materials. Structures and appendages regulated by this code shall be constructed of materials specified in this code for structures on private property.

DRAFT

[S] ((~~SECTION 3202~~
~~ENCROACHMENTS~~

~~**3202.1 Encroachments below grade.** Encroachments below grade shall comply with Sections 3202.1.1 through 3202.1.3.~~

~~**3202.1.1 Structural support.** A part of a building erected below grade that is necessary for structural support of the building or structure shall not project beyond the *lot lines*, except that the footings of street walls or their supports that are located not less than 8 feet (2438 mm) below grade shall not project more than 12 inches (305 mm) beyond the street *lot line*.~~

~~**3202.1.2 Vaults and other enclosed spaces.** The construction and utilization of vaults and other enclosed spaces below grade shall be subject to the terms and conditions of the applicable governing authority.~~

~~**3202.1.3 Areaways.** Areaways shall be protected by grates, *guards* or other *approved* means.~~

~~**3202.2 Encroachments above grade and below 8 feet in height.** Encroachments into the public right-of-way above grade and below 8 feet (2438 mm) in height shall be prohibited except as provided for in Sections 3202.2.1 through 3202.2.3. Doors and windows shall not open or project into the public right-of-way.~~

~~**3202.2.1 Steps.** Steps shall not project more than 12 inches (305 mm) and shall be guarded by *approved* devices not less than 3 feet (914 mm) in height, or shall be located between columns or pilasters.~~

~~**3202.2.2 Architectural features.** Columns or pilasters, including bases and moldings, shall not project more than 12 inches (305 mm). Belt courses, lintels, sills, architraves, pediments and similar architectural features shall not project more than 4 inches (102 mm).~~

~~**3202.2.3 Awnings.** The vertical clearance from the public right-of-way to the lowest part of any *awning*, including valances, shall be not less than 7 feet (2134 mm).~~

~~**3202.3 Encroachments 8 feet or more above grade.** Encroachments 8 feet (2438 mm) or more above grade shall comply with Sections 3202.3.1 through 3202.3.4.~~

~~**3202.3.1 Awnings, canopies, marquees and signs.** *Awnings*, canopies, marquees and signs shall be constructed so as to support applicable loads as specified in Chapter 16. *Awnings*, canopies, marquees and signs with less than 15 feet (4572 mm) of clearance above the sidewalk shall not extend into or occupy more than two-thirds the width of the sidewalk measured from~~

~~the building. Stanchions or columns that support *awnings*, canopies, marquees and signs shall be located not less than 2 feet (610 mm) in from the curb line.~~

~~**3202.3.2 Windows, balconies, architectural features and mechanical equipment.** Where the vertical clearance above grade to projecting windows, balconies, architectural features or mechanical equipment is more than 8 feet (2438 mm), 1 inch (25 mm) of encroachment is permitted for each additional 1 inch (25 mm) of clearance above 8 feet (2438 mm), but the maximum encroachment shall be 4 feet (1219 mm).~~

~~**3202.3.3 Encroachments 15 feet or more above grade.** Encroachments 15 feet (4572 mm) or more above grade shall not be limited.~~

~~**3202.3.4 Pedestrian walkways.** The installation of a pedestrian walkway over a public right-of-way shall be subject to the approval of the applicable governing authority. The vertical clearance from the public right-of-way to the lowest part of a *pedestrian walkway* shall be not less than 15 feet (4572 mm).~~

~~**3202.4 Temporary encroachments.** Where allowed by the applicable governing authority, vestibules and storm enclosures shall not be erected for a period of time exceeding 7 months in any 1 year and shall not encroach more than 3 feet (914 mm) nor more than one-fourth of the width of the sidewalk beyond the street *lot line*. Temporary entrance *awnings* shall be erected with a clearance of not less than 7 feet (2134 mm) to the lowest portion of the hood or *awning* where supported on removable steel or other *approved* noncombustible support.~~))

DRAFT

CHAPTER 33

SAFEGUARDS DURING CONSTRUCTION

User notes:

About this chapter: *While the balance of the chapters in this code specify how a building is to be designed and constructed in order to be in compliance with the code, Chapter 33 looks to the actual construction process. Parameters are provided for demolition and for protecting adjacent property during demolition and construction. Issues such as how to provide egress while the building is growing, the timing of standpipe and sprinkler installation, and protection of pedestrians are addressed.*

Code development reminder: *Code change proposals to sections preceded by the designation [BS] will be considered by the IBC—Structural Code Development Committee during the 2019 (Group B) Code Development Cycle. See explanation on page iv.*

SECTION 3301
GENERAL

3301.1 Scope. The provisions of this chapter shall govern safety during construction and the protection of adjacent public and private properties.

3301.2 Storage and placement. Construction equipment and materials shall be stored and placed so as not to endanger the public, the workers or adjoining property for the duration of the construction project.

SECTION 3302
CONSTRUCTION SAFEGUARDS

3302.1 Alterations, repairs and additions. Required *exits*, existing structural elements, fire protection devices and sanitary safeguards shall be maintained at all times during *alterations*, *repairs* or *additions* to any building or structure.

Exceptions:

1. Where such required elements or devices are being altered or repaired, adequate substitute provisions shall be made.
2. Maintenance of such elements and devices is not required where the existing building is not occupied.

3302.2 Manner of removal. Waste materials shall be removed in a manner that prevents injury or damage to persons, adjoining properties and public rights-of-way.

3302.3 Fire safety during construction. Fire safety during construction shall comply with the applicable requirements of this code and the applicable provisions of Chapter 33 of the *International Fire Code.*

SECTION 3303
DEMOLITION

3303.1 Construction documents. *Construction documents* and a schedule for demolition shall be submitted where required by the *building official*. Where such information is required, work shall not be done until such *construction documents* or schedule, or both, are *approved*.

[S] 3303.2 Pedestrian protection. The work of demolishing any building shall not be commenced until pedestrian protection is in place as required by this chapter and the Street Use Ordinance, *Seattle Municipal Code* Title 15.

3303.3 Means of egress. A *horizontal exit* shall not be destroyed unless and until a substitute *means of egress* has been provided and *approved*.

[S] ((~~3303.4 Vacant lot.~~ ~~Where a structure has been demolished or removed, the vacant lot shall be filled and maintained to the existing grade or in accordance with the ordinances of the jurisdiction having authority.~~))

[S] 3303.4 Surface condition and fill. The site shall be left level and free of debris upon completion of demolition, and all holes shall be filled or protected with secure fences. Holes are permitted to be filled with concrete, rocks or other nondecaying material no larger than 12 inches (305 mm) in diameter. Wood and other organic material shall not be buried on the site.

Leaving the site level means:

1. The grade conforms to that existing on all sides;
2. Surface water will drain off;
3. Surface is smooth; and

DRAFT

4. Broken sections of the foundation or other material are not exposed.

The site shall be seeded upon completion of the demolition if it is to be left vacant for more than 6 months.

3303.5 Water accumulation. Provision shall be made to prevent the accumulation of water or damage to any foundations on the premises or the adjoining property.

[S] 3303.6 Utility connections. Service utility connections shall be discontinued and capped in accordance with ((~~the *approved* rules and the requirements of the applicable governing authority~~)) requirements of the governing utility or agency including, but not limited to, Seattle Public Utilities, Seattle Department of Transportation, Seattle Fire Department, Seattle City Light, Puget Sound Energy and CenturyLink.

3303.7 Fire safety during demolition. Fire safety during demolition shall comply with the applicable requirements of this code and the applicable provisions of Chapter 33 of the *International Fire Code.*

[S] 3303.8 Removal of hazardous and combustible materials. All asbestos and other hazardous material shall be removed prior to demolition, in accordance with regulations of the Environmental Protection Agency, the Puget Sound Clean Air Agency and other pertinent agencies. Combustible waste shall be removed in accordance with the *International Fire Code*. During demolition, streets and sidewalks shall be left clean at the end of each day's operation.

[S] 3303.9 Welding and cutting. Welding and cutting shall be performed in accordance with the *International Fire Code*.

[S] 3303.10 Erosion and sediment control. Provision shall be made to stabilize ground conditions to eliminate dust and erosion. Demolition sites shall comply with *Seattle Municipal Code* Title 22 Subtitle VIII, the *Seattle Stormwater Code* and *Seattle Municipal Code* Chapter 22.170, the *Seattle Grading Code*.

[S] 3303.11 Drainage. If the demolition will result in a change of drainage patterns, the flow of all watercourses, including streams, ditches, drains, combined sewers and runoff, intercepted during the progress of the work, shall be returned to the condition present before the demolition or as specified on the permit, and in accordance with *Seattle Municipal Code* Title 22 Subtitle VIII, the *Seattle Stormwater Code* and *Seattle Municipal Code* Chapter 22.170, the *Seattle Grading Code*, respectively.

[S] 3303.12 Foundations and footings. All concrete or masonry floors, foundations, footings, basement walls and retaining walls not to be reused shall be removed to 18 inches (457 mm) below final grade. All concrete floors left in place shall be broken so as to allow water to drain through unless the floors are to be used.

[S] 3303.13 Engineer's report. The *building official* is permitted to require a structural engineer's analysis of proposed demolition or any portions of a structure remaining after demolition.

[S] 3303.14 Underground tanks. When demolition occurs, all underground tanks on the site shall either be removed or filled, as required by the *International Fire Code*.

[S] 3303.15 Rat eradication program. All applicants for a demolition permit shall initiate a rat eradication program on the project site at least 15 days prior to the start of demolition or any clearing or grading activity on the demolition site.

[S] 3303.15.1 Duration of rat eradication program. The rat eradication program must continue at least until demolition begins. No demolition or clearing or grading on the demolition site shall begin until the rat eradication program is complete unless approved by the *building official*. The rat eradication program may be terminated or waived by the *building official* when supported by a written recommendation of a licensed pest control agent.

[S] 3303.15.2 Requirements of rat eradication program. The rat eradication program shall be approved by a qualified pest control agent and shall comply with the Seattle-King County Public Health Department guidelines and recommendations for rat baiting. The use of any pesticide shall comply with WAC 16-228-1380. The *building official* may require additional deterrent measures on recommendation of the Seattle-King County Public Health Department.

[S] 3303.15.3 Demolition permit. The *building official* shall not issue any demolition permit until the applicant has provided a copy of the rat eradication program and a declaration that the requirements of Section 3303.15 have been or will be complied with prior to the start of demolition.

SECTION 3304
SITE WORK

3304.1 Excavation and fill. Excavation and fill for buildings and structures shall be constructed or protected so as not to endanger life or property. Stumps and roots shall be removed from the soil to a depth of not less than 12 inches (305 mm) below the surface of the ground in the area to be occupied by the building. Wood forms that have been used in placing concrete, if within the ground or between foundation sills and the ground, shall be removed before a building is occupied or used for any purpose. Before completion, loose or casual wood shall be removed from direct contact with the ground under the building.

3304.1.1 Slope limits. Slopes for permanent fill shall be not steeper than one unit vertical in two units horizontal (50-percent slope). Cut slopes for permanent excavations shall be not steeper than one unit vertical in two units horizontal (50-percent

DRAFT

slope). Deviation from the foregoing limitations for cut slopes shall be permitted only upon the presentation of a soil investigation report acceptable to the *building official*.

3304.1.2 Surcharge. Fill or other surcharge loads shall not be placed adjacent to any building or structure unless such building or structure is capable of withstanding the additional loads caused by the fill or surcharge. Existing footings or foundations that can be affected by any excavation shall be underpinned adequately or otherwise protected against settlement and shall be protected against lateral movement.

[S] ((~~3304.1.3 Footings on adjacent slopes.~~ ~~For footings on adjacent slopes, see Chapter 18.~~))

3304.1.4 Fill supporting foundations. Fill to be used to support the foundations of any building or structure shall comply with Section 1804.6. *Special inspections* of compacted fill shall be in accordance with Section 1705.6.

3304.5.1 Fire watch during construction. Where required by the fire code official, a fire watch shall be provided during nonworking hours for new construction that exceeds 40 feet (12,192 mm) in height above the lowest adjacent grade.

EXCEPTIONS:

1. New construction that is built under the IRC.
2. New construction less than 5 stories and 50,000 square feet per story.

SECTION 3305
SANITARY

[S] 3305.1 Facilities required. Sanitary facilities shall be provided during construction, remodeling or demolition activities in accordance with the ((~~*International*~~)) *Uniform Plumbing Code.*

SECTION 3306
PROTECTION OF PEDESTRIANS

[S][BS] 3306.1 Protection required. ((~~Pedestrians shall be protected during construction, remodeling and demolition activities as required by this chapter and Table 3306.1. Signs shall be provided to direct pedestrian traffic.~~)) The protection of the public and of the sidewalks, streets and other public property during construction or demolition shall be provided as required by the Street Use Ordinance, *Seattle Municipal Code* Title 15.

[S] ((~~TABLE 3306.1~~
~~PROTECTION OF PEDESTRIANS~~

~~HEIGHT OF CONSTRUCTION~~	~~DISTANCE FROM CONSTRUCTION TO LOT LINE~~	~~TYPE OF PROTECTION REQUIRED~~
~~8 feet or less~~	~~Less than 5 feet~~	~~Construction railings~~
	~~5 feet or more~~	~~None~~
~~More than 8 feet~~	~~Less than 5 feet~~	~~Barrier and covered walkway~~
	~~5 feet or more, but not more than one-fourth the height of construction~~	~~Barrier and covered walkway~~
	~~5 feet or more, but between one-fourth and one-half the height of construction~~	~~Barrier~~
	~~5 feet or more, but exceeding one-half the height of construction~~	~~None~~

~~For SI: 1 foot = 304.8 mm.~~))

[S] ((~~[BS] 3306.2 Walkways.~~ ~~A walkway shall be provided for pedestrian travel in front of every construction and demolition site unless the applicable governing authority authorizes the sidewalk to be fenced or closed. A walkway shall be provided for pedestrian travel that leads from a *building* entrance or exit of an occupied structure to a public way.Walkways shall be of sufficient width to accommodate the pedestrian traffic, but shall be not less than 4 feet (1219 mm) in width. Walkways shall be provided with a durable walking surface. Walkways shall be *accessible* in accordance with Chapter 11 and shall be designed to support all imposed loads, and the design live load shall be not less than 150 pounds per square foot (psf) (7.2 kN/m^2).~~))

[S] ((~~[BS] 3306.3 Directional barricades.~~ ~~Pedestrian traffic shall be protected by a directional barricade where the walkway extends into the street. The directional barricade shall be of sufficient size and construction to direct vehicular traffic away from the pedestrian path.~~))

[S] ((~~[BS] 3306.4 Construction railings.~~ ~~Construction railings shall be not less than 42 inches (1067 mm) in height and shall be sufficient to direct pedestrians around construction areas.~~))

DRAFT

[S] ((~~[BS] 3306.5 Barriers.~~ ~~Barriers shall be not less than 8 feet (2438 mm) in height and shall be placed on the side of the walkway nearest the construction. Barriers shall extend the entire length of the construction site. Openings in such barriers shall be protected by doors that are normally kept closed.~~))

[S] ((~~[BS] 3306.6 Barrier design.~~ ~~Barriers shall be designed to resist loads required in Chapter 16 unless constructed as follows:~~

1. ~~Barriers shall be provided with 2-inch by 4-inch (51 mm by 102 mm) top and bottom plates.~~
2. ~~The barrier material shall be boards not less than 3/4-inch (19.1 mm) thick or wood structural panels not less than 1/4-inch (6.4 mm) thick.~~
3. ~~Wood structural use panels shall be bonded with an adhesive identical to that for exterior wood structural use panels.~~
4. ~~Wood structural use panels 1/4 inch (6.4 mm) or 5/16 inch (23.8 mm) in thickness shall have studs spaced not more than 2 feet (610 mm) on center.~~
5. ~~Wood structural use panels 3/8 inch (9.5 mm) or 1/2 inch (12.7 mm) in thickness shall have studs spaced not more than 4 feet (1219 mm) on center provided that a 2-inch by 4-inch (51 mm by 102 mm) stiffener is placed horizontally at mid-height where the stud spacing is greater than 2 feet (610 mm) on center.~~
6. ~~Wood structural use panels 5/8 inch (15.9 mm) or thicker shall not span over 8 feet (2438 mm).~~

[S] ((~~[BS] 3306.7 Covered walkways.~~ ~~Covered walkways shall have a clear height of not less than 8 feet (2438 mm) as measured from the floor surface to the canopy overhead. Adequate lighting shall be provided at all times. Covered walkways shall be designed to support all imposed loads. The design live load shall be not less than 150 psf (7.2 kN/m²) for the entire structure.~~

~~**Exception:** Roofs and supporting structures of covered walkways for new, light-frame construction not exceeding two *stories* above *grade plane* are permitted to be designed for a live load of 75 psf (3.6kN/m²) or the loads imposed on them, whichever is greater. In lieu of such designs, the roof and supporting structure of a covered walkway are permitted to be constructed as follows:~~

1. ~~Footings shall be continuous 2-inch by 6-inch (51 mm by 152 mm) members.~~
2. ~~Posts not less than 4 inches by 6 inches (102 mm by 152 mm) shall be provided on both sides of the roof and spaced not more than 12 feet (3658 mm) on center.~~
3. ~~Stringers not less than 4 inches by 12 inches (102 mm by 305 mm) shall be placed on edge upon the posts.~~
4. ~~Joists resting on the stringers shall be not less than 2 inches by 8 inches (51 mm by 203 mm) and shall be spaced not more than 2 feet (610 mm) on center.~~
5. ~~The deck shall be planks not less than 2 inches (51 mm) thick or wood structural panels with an exterior exposure durability classification not less than 23/32 inch (18.3 mm) thick nailed to the joists.~~
6. ~~Each post shall be knee braced to joists and stringers by members not less than 2 inches by 4 inches (51 mm by 102 mm); 4 feet (1219 mm) in length.~~
7. ~~A curb that is not less than 2 inches by 4 inches (51 mm by 102 mm) shall be set on edge along the outside edge of the deck.~~))

[S] ((~~[BS] 3306.8 Repair, maintenance and removal.~~ ~~Pedestrian protection required by this chapter shall be maintained in place and kept in good order for the entire length of time pedestrians are subject to being endangered. The *owner* or the *owner's* authorized agent, on completion of the construction activity, shall immediately remove walkways, debris and other obstructions and leave such public property in as good a condition as it was before such work was commenced.~~))

[S] ((~~[BS] 3306.9 Adjacent to excavations.~~ ~~Every excavation on a site located 5 feet (1524 mm) or less from the street *lot line* shall be enclosed with a barrier not less than 6 feet (1829 mm) in height. Where located more than 5 feet (1524 mm) from the street *lot line*, a barrier shall be erected where required by the *building official*. Barriers shall be of adequate strength to resist wind pressure as specified in Chapter 16.~~))

SECTION 3307
PROTECTION OF ADJOINING PROPERTY

[S][BS] 3307.1 Protection required. Adjoining public and private property shall be protected from damage during construction, remodeling and demolition work. Protection shall be provided for footings, foundations, party walls, chimneys, skylights and roofs. Provisions shall be made to control water runoff and erosion during construction or demolition activities. ((~~The person making or causing an excavation to be made shall provide written notice to the *owners* of adjoining buildings advising them that the excavation is to be made and that the adjoining buildings should be protected. Said notification shall be delivered not less than 10 days prior to the scheduled starting date of the excavation.~~)) When the existing grade of a site is altered by filling, excavating, dredging or moving of earth materials, the *owner* shall protect all adjoining property during construction from encroachment or collapse by sloping the sides of the temporary grading at a slope that is safe and not more than one horizontal to one vertical. In addition, adjoining property shall be protected from encroachment or collapse by sloping the sides of the permanent

DRAFT

grading at a slope not greater than two horizontal to one vertical. The *building official* is authorized to approve temporary or permanent slopes that are steeper based on a design by an experienced geotechnical engineer.

In areas of known unsuitable soils, the *building official* is authorized to require slopes that are less steep to assure protection of adjoining property.

SECTION 3308
TEMPORARY USE OF STREETS, ALLEYS AND PUBLIC PROPERTY

[S] 3308.1 ((~~Storage and handling of materials~~)) General. ((~~The temporary use of streets or public property for the storage or handling of materials or of equipment required for construction or demolition, and the protection provided to the public shall comply with the provisions of the applicable governing authority and this chapter.~~))

[S] ((~~3308.1.1 Obstructions.~~ ~~Construction materials and equipment shall not be placed or stored so as to obstruct access to fire hydrants, standpipes, fire or police alarm boxes, catch basins or manholes, nor shall such material or equipment be located within 20 feet (6096 mm) of a street intersection, or placed so as to obstruct normal observations of traffic signals or to hinder the use of public transit loading platforms.~~))

[S] ((~~3308.2 Utility fixtures.~~ ~~Building materials, fences, sheds or any obstruction of any kind shall not be placed so as to obstruct free approach to any fire hydrant, fire department connection, utility pole, manhole, fire alarm box or catch basin, or so as to interfere with the passage of water in the gutter. Protection against damage shall be provided to such utility fixtures during the progress of the work, but sight of them shall not be obstructed.~~))

SECTION 3309
FIRE EXTINGUISHERS

[F] 3309.1 Where required. Structures under construction, *alteration* or demolition shall be provided with not fewer than one *approved* portable fire extinguisher in accordance with Section 906 and sized for not less than ordinary hazard as follows:

1. At each *stairway* on all floor levels where combustible materials have accumulated.
2. In every storage and construction shed.
3. Additional portable fire extinguishers shall be provided where special hazards exist, such as the storage and use of flammable and combustible liquids.

[F] 3309.2 Fire hazards. The provisions of this code and the *International Fire Code* shall be strictly observed to safeguard against all fire hazards attendant upon construction operations.

DRAFT

SECTION 3310
MEANS OF EGRESS

3310.1 Stairways required. Where building construction exceeds 40 feet (12 192 mm) in height above the lowest level of fire department vehicle access, a temporary or permanent stairway shall be provided. As construction progresses, such stairway shall be extended to within one floor of the highest point of construction having secured decking or flooring.

[F] 3310.2 Maintenance of means of egress. *Means of egress* and required *accessible means of egress* shall be maintained at all times during construction, demolition, remodeling or *alterations* and *additions* to any building.

Exception: Existing means of egress need not be maintained where a*pproved* temporary *means of egress* systems and facilities are provided.

[S] 3310.3 Stairway floor number signs. Temporary stairway floor number signs shall be provided in accordance with the requirements of Section 1023.9.

SECTION 3311
STANDPIPES

[F] 3311.1 Where required. In buildings required to have standpipes by Section 905.3.1, not fewer than one standpipe shall be provided for use during construction. Such standpipes shall be installed prior to construction exceeding 40 feet (12 192 mm) in height above the lowest level of fire department vehicle access. Such standpipes shall be provided with fire department hose connections at locations adjacent to *stairways* complying with Section 3310.1. As construction progresses, such standpipes shall be extended to within one floor of the highest point of construction having secured decking or flooring.

[F] 3311.2 Buildings being demolished. Where a building is being demolished and a standpipe exists within such a building, such standpipe shall be maintained in an operable condition so as to be available for use by the fire department. Such standpipe shall be demolished with the building but shall not be demolished more than one floor below the floor being demolished.

[F] 3311.3 Detailed requirements. Standpipes shall be installed in accordance with the provisions of Chapter 9.

Exception: Standpipes shall be either temporary or permanent in nature, and with or without a water supply, provided that such standpipes conform to the requirements of Section 905 as to capacity, outlets and materials.

SECTION 3312
AUTOMATIC SPRINKLER SYSTEM

[S][F] 3312.1 Completion before occupancy. In buildings where an *automatic sprinkler system* is required by this code, it shall be unlawful to occupy any portion of a building or structure until the *automatic sprinkler system* installation has been tested and *approved*, ((~~except as provided in Section 111.3~~)) unless *approved* by the *building official*.

[F] 3312.2 Operation of valves. Operation of sprinkler control valves shall be permitted only by properly authorized personnel and shall be accompanied by notification of duly designated parties. When the sprinkler protection is being regularly turned off and on to facilitate connection of newly completed segments, the sprinkler control valves shall be checked at the end of each work period to ascertain that protection is in service.

SECTION 3313
WATER SUPPLY FOR FIRE PROTECTION

[F] 3313.1 Where required. An *approved* water supply for fire protection, either temporary or permanent, shall be made available as soon as combustible material arrives on the site.

SECTION 3314
FIRE WATCH DURING CONSTRUCTON

[F] 3314.1 Fire watch during combustible construction. Where required by the *fire code official*, a fire watch shall be provided during nonworking hours for construction that exceeds 40 feet (12 192 mm) in height above the lowest adjacent grade.

[S] SECTION 3315
CONSTRUCTION MATERIAL MANAGEMENT

[S] 3315.1 Storage and handling of materials. Materials stored and handled on site during construction shall comply with the manufacturer's printed instructions. Where manufacturer's printed instructions are not available, approved standards or guidelines shall be followed.

[S] 3315.2 Construction phase moisture control. Porous or fibrous materials and other materials subject to moisture damage shall be protected from moisture during construction. Material damaged by moisture or that is visibly colonized by fungi either prior to delivery or during construction shall be cleaned and dried or, where damage cannot be corrected by such means, shall be removed and replaced.

DRAFT

APA—continued

APA PDS Supplement 4—12: Design and Fabrication of Plywood Sandwich Panels (revised 2013)
2306.1

APA PDS Supplement 5—16: Design and Fabrication of All-plywood Beams (revised 2013)
2306.1

ANSI/APA PRG 320—((~~17~~)) ~~18~~: Standard for Performance-rated Cross-laminated Timber
2303.1.4, 602.4

APA R540—13: Builders Tips: Proper Storage and Handling of Glulam Beams
2306.1

APA S475—16: Glued Laminated Beam Design Tables
2306.1

APA S560—14: Field Notching and Drilling of Glued Laminated Timber Beams
2306.1

APA T300—16: Glulam Connection Details
2306.1

APA X440—17: Product Guide: Glulam
2306.1

APA X450—01: Glulam in Residential Construction—Western Edition
2306.1

ASABE

American Society of Agricultural and Biological Engineers
2950 Niles Road
St. Joseph, MI 49085

EP 484.3 MON2016: Diaphragm Design of Metal-clad, Wood-frame Rectangular Buildings
2306.1

EP 486.2 OCT 2012ED: Shallow-post and Pier Foundation Design
2306.1

EP 559.2 MON2016: Design Requirements and Bending Properties for Mechanically Laminated Wood Assemblies
2306.1

DRAFT

ASCE/SEI

American Society of Civil Engineers
Structural Engineering Institute
1801 Alexander Bell Drive
Reston, VA 20191-4400

7—16: Minimum Design Loads and Associated Criteria for Buildings and Other Structures
202, Table 1504.1.1, Table 1504.8, 1602.1, 1604.3, Table 1604.3, 1604.5, Table 1604.5, 1604.8.2, 1604.9, 1605.1, 1605.2.1, 1605.3.1, 1605.3.1.2, 1605.3.2, 1605.3.2.1, 1607.8.1, 1607.8.1.1, 1607.8.1.2, 1607.9, 1607.13.1, 1607.13.3.1, 1608.1, 1608.2, 1608.3, 1609.1.1, 1609.2, 1609.3, 1609.5.1, 1609.5.3, 1611.2, 1612.2, 1613.1, 1613.2.2, 1613.2.3, 1613.2.5, Table 1613.2.3(1), Table 1613.2.3(2), 1613.2.5.1, 1613.2.5.2, 1613.3, 1614.1, 1615.1, 1705.12, 1705.12.1.1, 1705.12.1.2, 1705.12.4, 1705.13.1.1, 1705.13.1.2, 1705.13.2, 1705.13.3, 1705.13.4, 1709.5, 1803.5.12, 1808.3.1, 1809.13, 1810.3.6.1, 1810.3.8.3.2, 1810.3.8.3.3, 1810.3.9.4, 1810.3.11.2, 1810.3.12, 1901.2, 1905.1.1, 1905.1.2, 1905.1.7, 1905.1.8, 2205.2.1.1, 2205.2.1.2, 2205.2.2, 2206.2.1, 2209.1, 2209.2, 2210.2, 2211.1.1.1, Table 2304.6.1, Table 2306.3(3), Table 2308.7.5, 2404.1, 2505.1, 2505.2, 2506.2.1

8—02: Standard Specification for the Design of Cold-formed Stainless Steel Structural Members
1604.3.3, 2210.1, 2210.2

19—16: Structural Applications of Steel Cables for Buildings
2208.1

24—14: Flood Resistant Design and Construction
1202.4.2, 1202.4.4, 1612.4, 1612.5, 2702.1.8, 3001.3

29—05: Standard Calculation Methods for Structural Fire Protection
722.1

NFPA—continued

17—17: Standard for Dry Chemical Extinguishing Systems
904.6, 904.12

17A—17: Standard for Wet Chemical Extinguishing Systems
904.5, 904.12

20—16: Standard for the Installation of Stationary Pumps for Fire Protection
412.2.4.1, 913.1, 913.2, 913.2.1, 913.5

30—18: Flammable and Combustible Liquids Code
415.6, 507.8.1.1.1, 507.8.1.1.2

30A—18: Code for Motor Fuel Dispensing Facilities and Repair Garages
406.2.9.2

31—16: Standard for the Installation of Oil-burning Equipment
2113.15

32—16: Standard for Dry Cleaning Plants
415.9.3

40—16: Standard for the Storage and Handling of Cellulose Nitrate Film
409.1

45—15: Standard on Fire Protection Laboratories Using Chemicals (2015 Edition)
428.3.7

58—17: Liquefied Petroleum Gas Code
415.9.2

61—17: Standard for the Prevention of Fires and Dust Explosions in Agricultural and Food Product Facilities
426.1

70—17: National Electrical Code
108.3, 406.2.7, 406.2.9, 412.5.7, 415.11.1.8, Table 509, 904.3.1, 907.6.1, 909.12.2, 909.16.3, 910.4.6, 1204.4.1, 2701.1, 2702.1.3, 3111.3

72—16: National Fire Alarm and Signaling Code
407.4.4.3, 407.4.4.5, 407.4.4.5.1, 901.6, 903.4.1, 904.3.5, 907.1.2, 907.2, 907.2.6, 907.2.9.3, 907.2.10, 907.2.12.2, 907.3, 907.3.3, 907.3.4, 907.5.2.1.2, 907.5.2.2, 907.5.2.2.5, 907.6, 907.6.1, 907.6.2, 907.6.6, 907.7, 907.7.1, 907.7.2, 911.1.6, 917.1, 2702.2.4, 3005.5, 3007.7

80—16: Standard for Fire Doors and Other Opening Protectives
410.2.5, 509.4.2, 716.1, 716.2.5.1, 716.2.6.4, 716.2.9, 716.3.4.1, 716.3.5, 1010.1.4.3

82—14: Standard on Incinerators and Waste and Linen Handling Systems and Equipment
713.13

85—15: Boiler and Combustion System Hazards Code
426.1

92—15: Standard for Smoke Control Systems
909.7, 909.8

99—18: Health Care Facilities Code
407.11, 422.6, 425.1

101—18: Life Safety Code
1029.6.2

105—16: Standard for Smoke Door Assemblies and Other Opening Protectives
405.4.2, 710.5.2.2, 716.2.10, 909.20.4.1

110—16: Standard for Emergency and Standby Power Systems
2702.1.3

111—13: Standard on Stored Electrical Energy Emergency and Standby Power Systems
2702.1.3

120—15: Standard for Fire Prevention and Control in Coal Mines
426.1

130—17: Standard forFixed Guideway Transit and Guideway Transit and Passenger Rail Systems
3101.1, 3114

170—18: Standard for Fire Safety and Emergency Symbols
1025.2.6.1

DRAFT