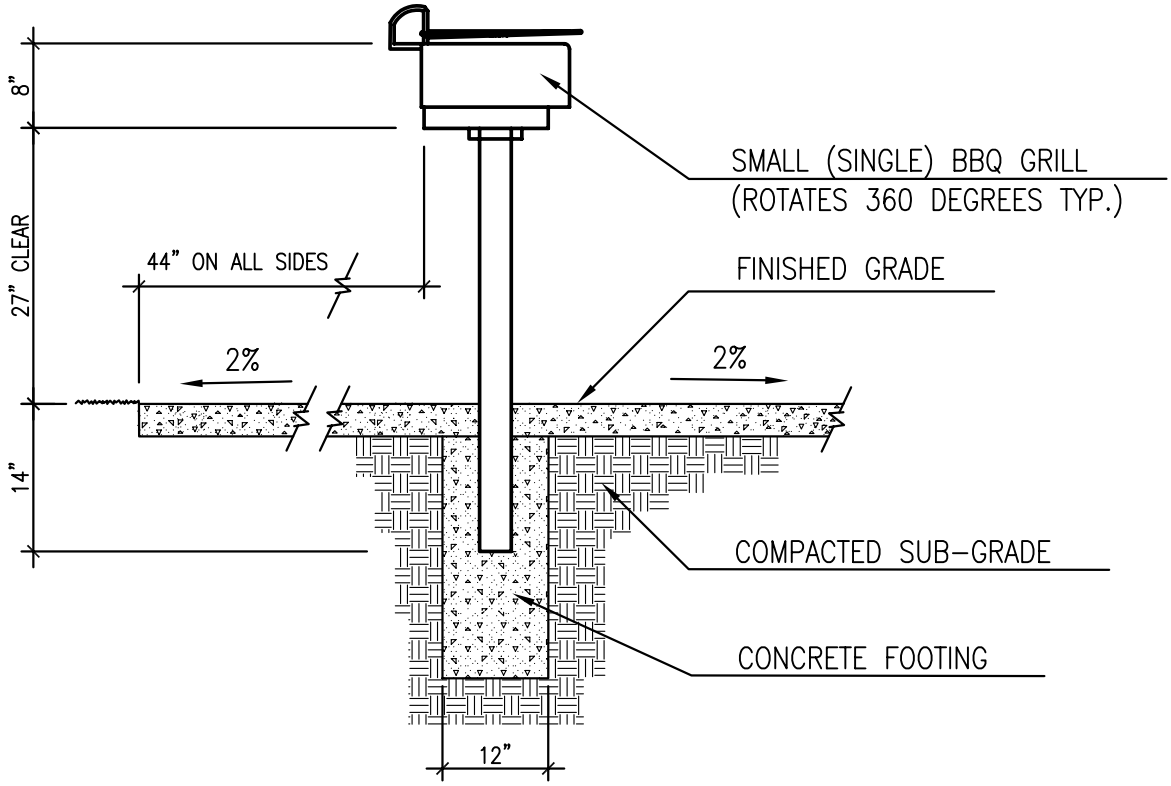

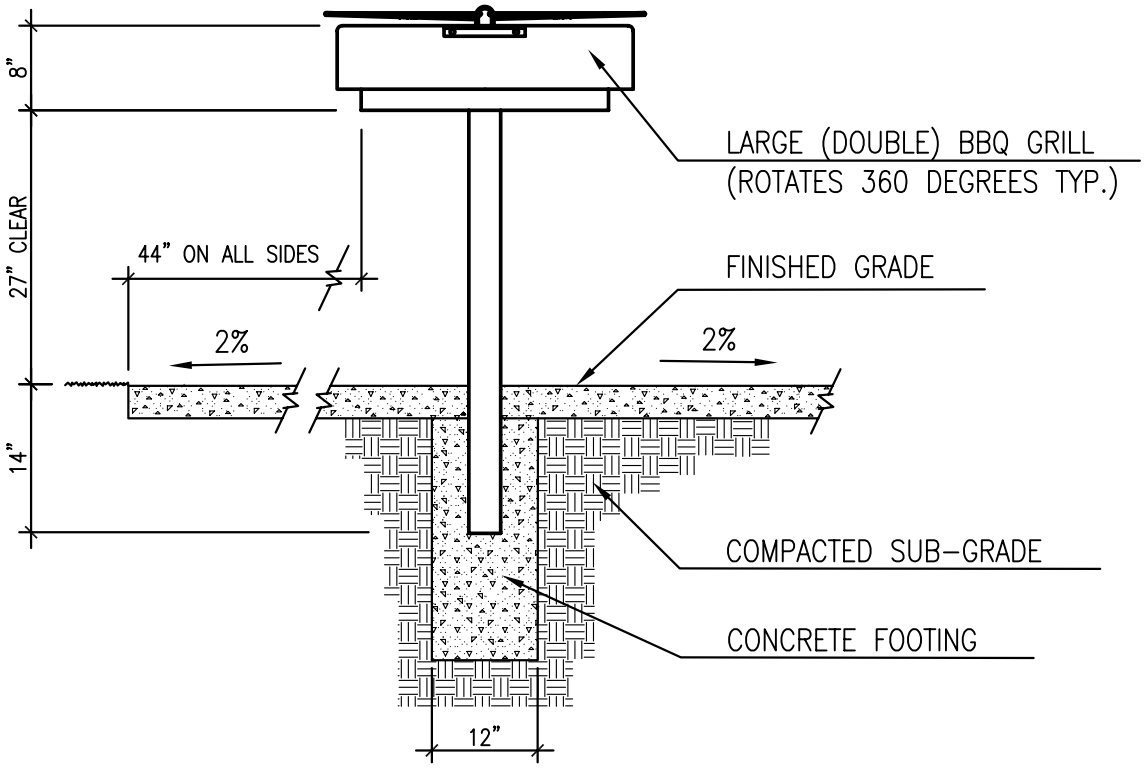

City of Seattle **Department of Parks & Recreation**	**BBQ GRILL INSTALLATION DETAIL** **STD. DETAIL NO. 12 93 53.13**