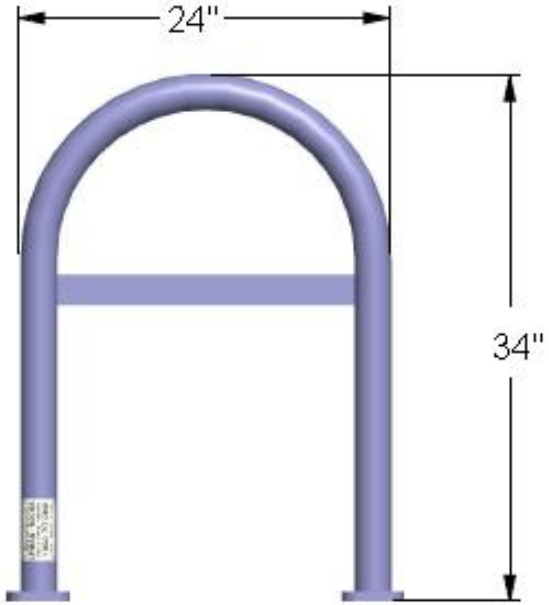

Urban Bicycle Parking System – “UB1000-STD”

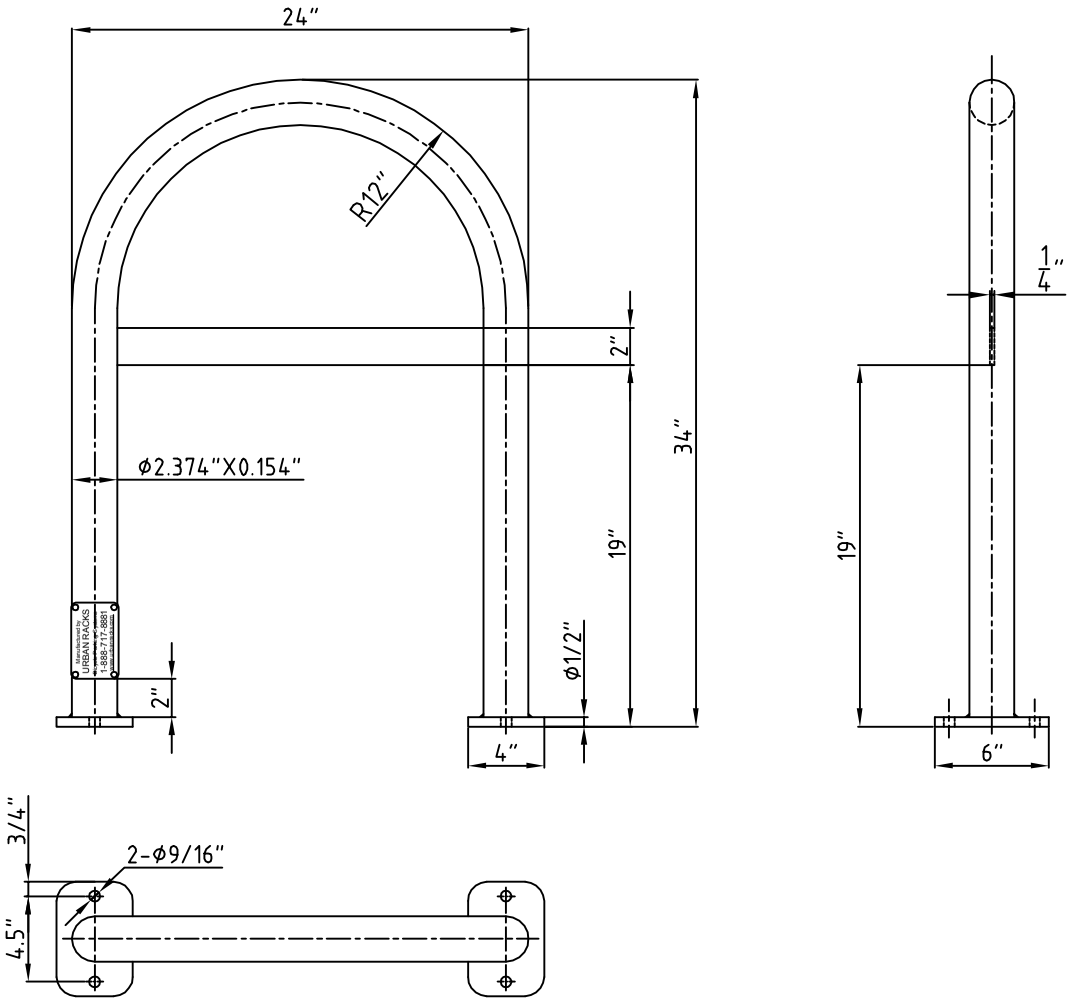

Urban Bicycle Parking System – “UB1000-STD”