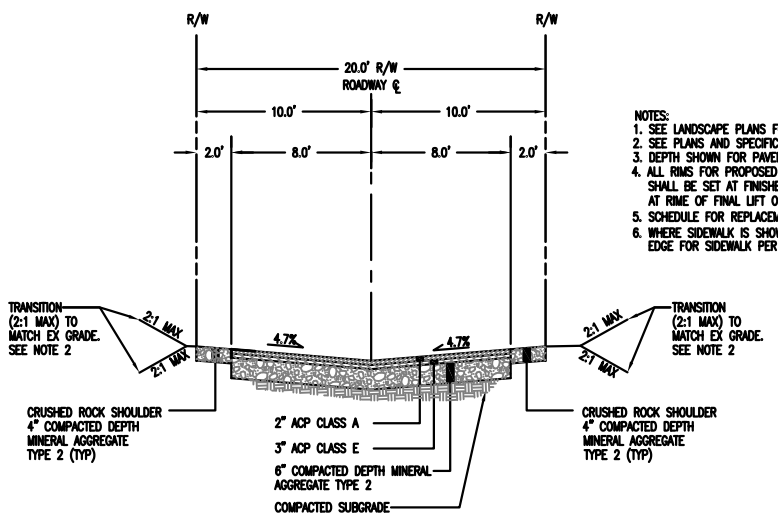

NOTES:
1. SEE LANDSCAPE PLANS FOR STREET TREES AND PLANTING LOCATION.
2. SEE PLANS AND SPECIFICATIONS FOR TRANSITION AREAS WITH TREES TO BE SAVED.
3. DEPTH SHOWN FOR PAVEMENT SECTIONS ARE COMPACTED DEPTHS.
4. ALL RIMS FOR PROPOSED STRUCTURES AND EXISTING STRUCTURES TO REMAIN SHALL BE SET AT FINISHED GRADE OF CLASS E. ADJUST RIMS TO FINISH GRADE AT RIME OF FINAL LIFT OF ACP.
5. SCHEDULE FOR REPLACEMENT OF FINAL ACP CLASS A LIFT PER DIRECTION OF GENERAL CONTRACTOR.
6. WHERE SIDEWALK IS SHOWN ON PLAN ADJACENT TO CURB PROVIDE THICKENED EDGE FOR SIDEWALK PER COS STD PLAN 420.

PHASE 1 ALLEY NAME	SHEETS
ALLEY 2E	2.53
ALLEY 2S	2.54
ALLEY 10N	2.55
ALLEY 11N	2.56
ALLEY 10S	2.57
ALLEY 11S	2.58
ALLEY 16N	2.59
ALLEY 16S	2.60
ALLEY 18	2.61

1"=5'
Cross Section Public Alley 1

STREET NAME	SHEETS	INTERSECTION
35TH AVE SW	2.28	VACATED SW LANHAM ST

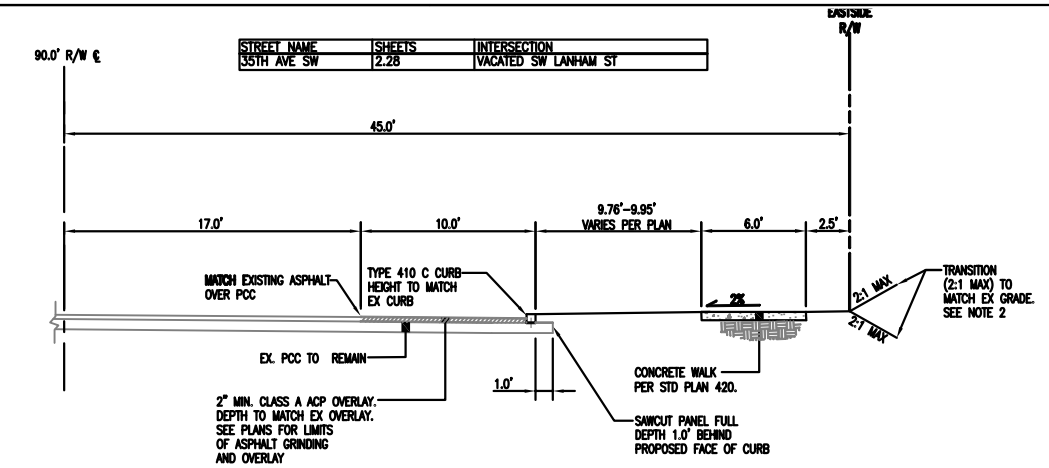

NOTES:
1. SEE LANDSCAPE PLANS FOR STREET TREES AND PLANTING LOCATION.
2. SEE PLANS AND SPECIFICATIONS FOR TRANSITION AREAS WITH TREES TO BE SAVED.
3. DEPTH SHOWN FOR PAVEMENT SECTIONS ARE COMPACTED DEPTHS.

NTS
35th Avenue • Vacated SW Lanham St 2

STREET NAME	SHEETS	INTERSECTION
30TH AVE SW	2.45, 2.46	SW GRAHAM ST to SW EDDY ST

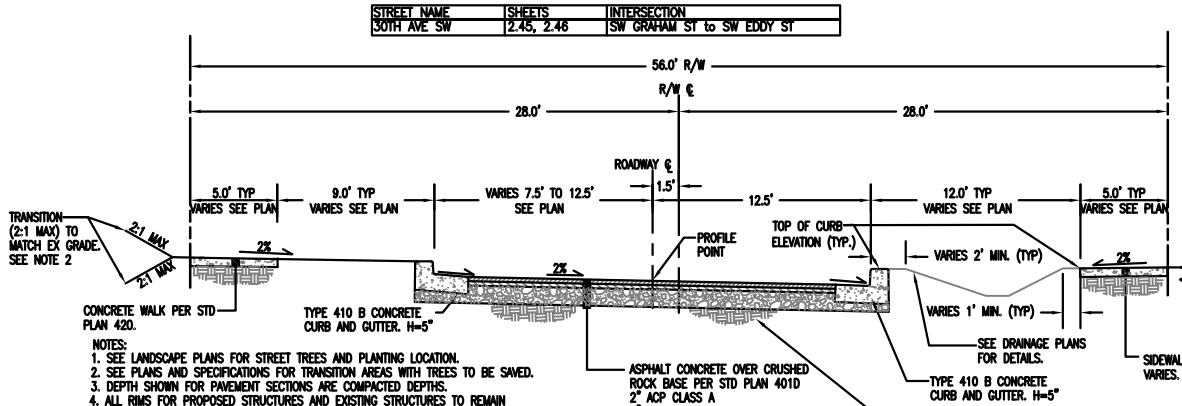

NOTES:
1. SEE LANDSCAPE PLANS FOR STREET TREES AND PLANTING LOCATION.
2. SEE PLANS AND SPECIFICATIONS FOR TRANSITION AREAS WITH TREES TO BE SAVED.
3. DEPTH SHOWN FOR PAVEMENT SECTIONS ARE COMPACTED DEPTHS.
4. ALL RIMS FOR PROPOSED STRUCTURES AND EXISTING STRUCTURES TO REMAIN SHALL BE SET AT FINISHED GRADE OF CLASS E. ADJUST RIMS TO FINISH GRADE AT RIME OF FINAL LIFT OF ACP.
5. SCHEDULE FOR REPLACEMENT OF FINAL ACP CLASS A LIFT PER DIRECTION OF GENERAL CONTRACTOR.
6. WHERE SIDEWALK IS SHOWN ON PLAN ADJACENT TO CURB PROVIDE THICKENED EDGE FOR SIDEWALK PER COS STD PLAN 420.

1"=5'
Cross Section 25' Road, 56' Right Of Way, Swale on Right 3

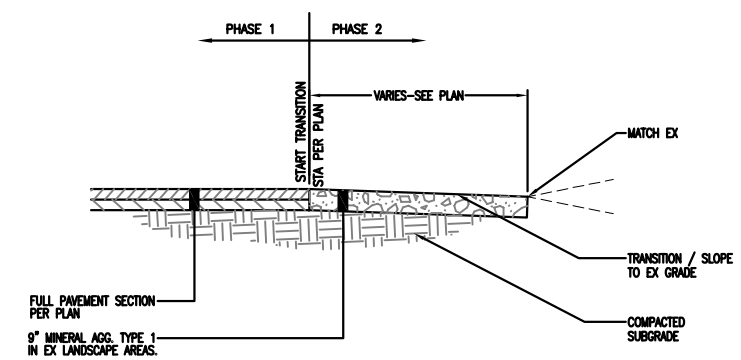

NOTES:
DEPTH SHOWN FOR PAVEMENT SECTIONS ARE COMPACTED DEPTHS.

NTS
Temporary Transition Between Phase I And II In Existing Landscape Areas 4

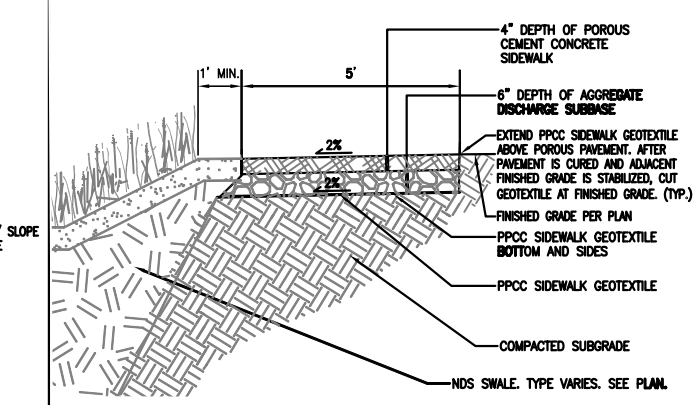

NTS
Porous Cement Concrete Sidewalk 5

STREET NAME	SHEETS	INTERSECTION
34TH AVE SW	2.76	26+42.98 TO 26+87.01 34th AVE. SW

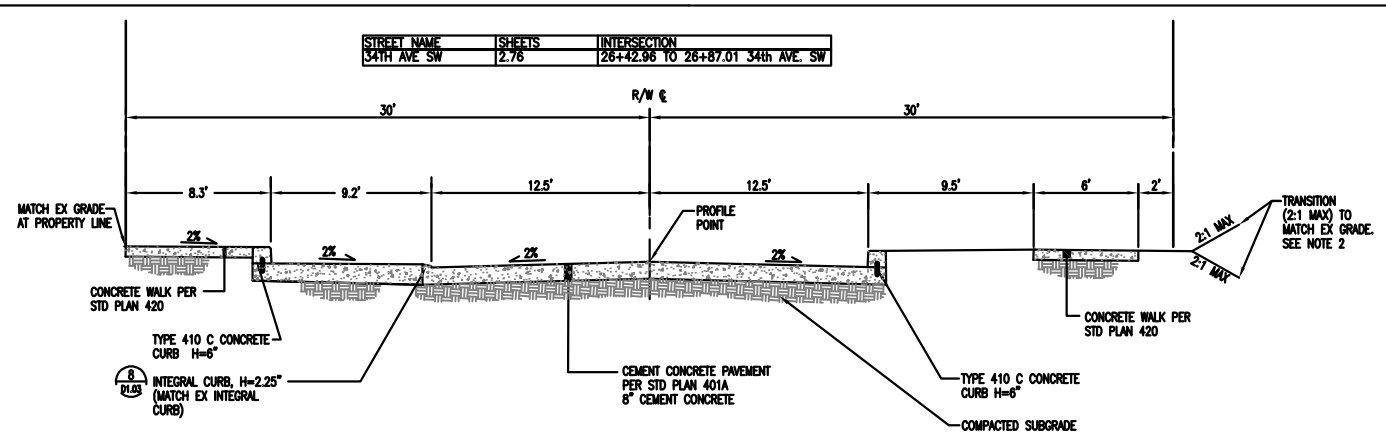

NOTES:
1. SEE LANDSCAPE PLANS FOR STREET TREES AND PLANTING LOCATION.
2. SEE PLANS AND SPECIFICATIONS FOR TRANSITION AREAS WITH TREES TO BE SAVED.
3. DEPTH SHOWN FOR PAVEMENT SECTIONS ARE COMPACTED DEPTHS.
4. WHERE SIDEWALK IS SHOWN ON PLAN ADJACENT TO CURB PROVIDE THICKENED EDGE FOR SIDEWALK PER COS STD PLAN 420.

NTS
34th Ave SW Cross Section 7

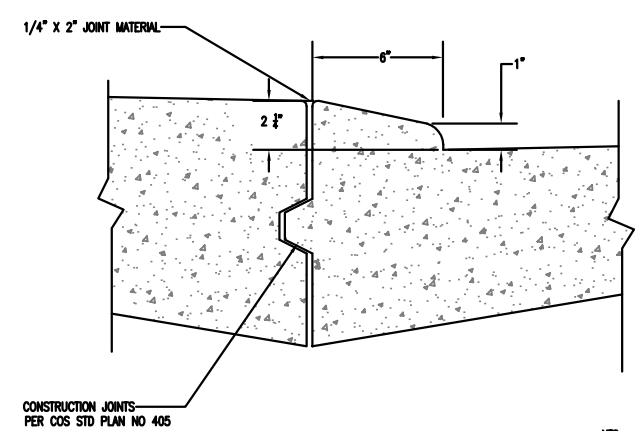

NTS
Integral Curb 8

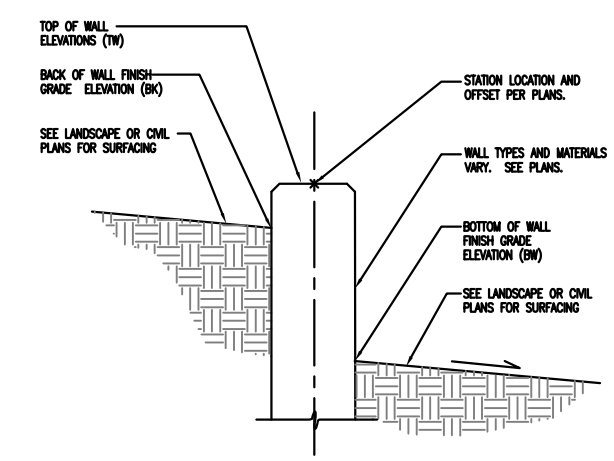

NTS
Typical Elevation At Walls 9

3000 SW GRAHAM ST.
HIGH POINT REVITALIZATION

SDOT PROJECT NO. T03–1748

DPD PERMIT NO. 737141

VAULT SERIAL NO.	DATE	MARK	NATURE REVISIONS	MADE	CHK'D	REV'D
34265						

File: G:\DG\DD03DL\Current\PC-plans\hpi_Details1-03.dwg ID: kathg Date: 16-Sep-04 3:21:41pm
Layered:

MITHŪN
Architects•Designers•Planners
Pier 56
1201 Alaskan Way
Suite 200
Seattle, WA 98101
tel 206.623.9344
fax 206.623.9345

SVR DESIGN COMPANY
815 Western Ave., Suite 400
Seattle, WA 98104
Phone: 206.223.0326
FAX: 206.223.0125
WWW.SVRDESIGN.COM

Seattle Housing Authority

KATHRYN M. GWILYM
STATE OF WASHINGTON
PROFESSIONAL ENGINEER
EXPIRES 6/24/05

REVIEWED BY SPU/WATER ENGINEERING	NAME OR INITIALS AND DATE	INITIALS AND DATE
..... 20.....	DESIGNED KG	REVIEWED:
REVIEWED BY SPU/DRAINAGE	CHECKED TvS	PLAN REVIEW ANALYST .....
..... 20.....	DRAWN JZ, CB	PLAN REVIEW SEC. MGR .....
APPROVED BY SDOT STREET IMPROVEMENT PERMITTING	CHECKED June 18, 2004	RECEIVED.....
..... 20.....	DESIGN REVIEW _____	REVISED AS–BUILT.....

All work done in accordance with the City of Seattle Standard Plans and Specifications in effect on the date shown above, and supplemented by Special Provisions.

THOMAS R. VON SCHRADER
STATE OF WASHINGTON
PROFESSIONAL ENGINEER
EXPIRES 3/24/05
QA/QC REVIEWER

City of Seattle
Seattle Department of Transportation

WORK ORDER NO. TWP0503
PERMIT NO. X8134
SCALE: H.AS NOTED V.
SPU NO. NS10188
APPROVED
INSPECTORS'S BOOK

HIGH POINT DRIVE SW et al
WM, PSS, PSD, C/W, CONC. CURB, PAVING, ETC.
Street Section Details

SDOT PROJECT NO. T03–1748
VAULT PLAN NO. 777–588
SHEET D1.03 OF