Flow Control Technical Requirements Manual

Issued November 2000

City of Seattle

Title 22.800 Stormwater, Grading & Drainage Control Code

Volume 1: Source Control Technical Requirements Manual
Volume 2: Construction Stormwater Control Technical Requirements Manual
Volume 3: Flow Control Technical Requirements Manual
Volume 4: Stormwater Treatment Technical Requirements Manual

Contacts For More Information

For questions regarding drainage codes and policies, drainage systems for new development, drainage problems associated with development under construction, or existing public and private drainage utilities, contact:

Department of Design, Construction and Land Use (DCLU)

Until January 25, 2001:
Drainage Review Desk
Foster Marshall Building
720 Second Avenue
(206) 684-5362

After January 29, 2001:
Drainage Review Desk
Key Tower
700 Fifth Avenue, Suite 2000
Seattle, WA 98104
(206) 684-5362

For questions regarding maintenance of private storm water facilities, source control practices and surface water quality, contact:

Seattle Public Utilities (SPU)
Dexter-Horton Building
710 2nd Avenue
Seattle, WA 98104
(206) 684-7560

For online information about the SPU surface water quality program, see the City's web page at: **www.ci.seattle.wa.us/util/RESCONS/swq/**

For questions regarding side sewer or drainage permitting and fees, changes to existing drainage systems unrelated to new development, or complaints regarding existing drainage, contact:

Seattle Department of Transportation (SEATRAN)
Street Use Counter
Seattle Municipal Building
600 4th Avenue
Seattle, WA 98104
(206) 684-5253

City of Seattle

DCLU	Director's Rule 26-2000
SPU	Director's Rule 03-00

Applicant: Seattle Public Utilities Department of Design, Construction and Land Use	**Page** iii of 61	**Supersedes:** SED DR 93-3
	Publication: 10/19/00	**Effective:** 1/1/01
Subject: Flow Control Technical Requirements Manual	**Code and Section Reference:** SMC 22.800-22.808	
	Type of Rule: Code Interpretation	
Index: Title 22.800 Stormwater, Grading and Drainage Control Code	**Ordinance Authority:** SMC 3.06.040	
	Approved Diana Gale **Date** 11/10/00 **Diana Gale, Director, SPU**	
	Approved **Date** 11/27/00 **R.F. Krochalis, Director, DCLU**	

Contents

Chapter 1: Requirements 1
1.1 Context 1
1.2 Purpose of this Rule 1
1.3 Discharge Point Requirements 2
1.4 Stormwater Code Flow Control Requirements 2
1.5 Principles of Flow Control 4
1.6 Stormwater Management Design Options 5
1.7 Facility Design Methods 7
1.8 Hydrologic Analysis Method 7
1.9 Planter Sizing Method 9
1.10 Submittal Requirements 10
- Standard Drainage Review 11
- Comprehensive Drainage Review 12

Chapter 2: Design Specifications for Detention Facilities 14
2.1 Detention System 14
2.2 Detention Vault 17
2.3 Stormwater Planter 18
2.4 Surface Detention 19

Chapter 3: Design Specificiations for Bioengineered and Infiltration Facilities 20
3.1 Description 20
3.2 Applicability and Setbacks 21
3.3 Siting Requirements 21
3.4 Overflow Conveyance System 22
3.5 Construction Requirements 22
3.6 Submittal Requirements 22
3.7 Operation and Maintenance Requirements 24
3.8 Additional Conditions and Responsibilities 24
3.9 Bioengineered Facilities: Bioengineered Planting Strip 25
3.10 Infiltration Facility: Infiltration Trench 27
3.11 Infiltration Facility: Dry Well 29
3.12 Infiltration Facility: Infiltration Planter 30

Additional References 32

Appendix A: City of Seattle Hyetograph 33

Appendix B: Impervious Surface Reduction Credit 36

Appendix C: Detention System Figures 41

Appendix D: Maintenance Requirements **48**

Appendix E: Planter Sizing Method Example **58**

List of Figures

Figure 1 Pre-developed and Developed Hydrographs 5
Figure 2 Stormwater Planter 18
Figure 3 Bioengineered Planting Strip 25
Figure 4 Infiltration Trench 27
Figure 5 Dry Well 29
Figure 6 Infiltration Planter 30
Figure 7 Porous Pavement 36
Figure 8 Eco-Roof 38
Figure 9 Roof Garden 39
Figure 10 Landscape Planter 40
Figure 11 Layout of a Detention System 41
Figure 12 Detention System Profile 41
Figure 13 Flow Control Structure 42
Figure 14 Flow Control Design Options 43
Figure 15 Ring and Cover 44
Figure 16 Type 200 Manhole 45
Figure 17 Tee Installation 46
Figure 18 Dual Orifice 47

List of Tables

Table 1 Summary of Stormwater Control Regulations 4
Table 2 Impervious Surface Reduction Designs 6
Table 3 Bioengineered and Infiltration Facilities 6
Table 4 Detention Facilities 7
Table 5 SCS Western Washington Runoff Curve Numbers, 1982 8
Table 6 Size Requirements for Standard Plan Detention System 16
Table 7 Detention Pipe Material and Diameter 16
Table 8 Size Requirements for Stormwater Planter 19
Table 9 Recommended Design Infiltration Rate based on ASTM Gradation Testing 23
Table 10 Size Requirements for Bioengineered Planting Strips 26
Table 11 Size Requirements for Infiltration Trench 28
Table 12 Size Requirements for Infiltration Planter 31
Table 13 Porous Pavement Impervious Surface Reduction Credit 36
Table 14 Maintenance Requirements for Catch Basins, Maintenance Holes, and Inlets ... 49
Table 15 Maintenance Requirements for Dry/Wet Vaults, Tanks, Pipes 51
Table 16 Maintenance Requirements for Bioengineered Planting Strips 52
Table 17 Maintenance Requirements for Infiltration Trenches 54
Table 18 Maintenance Requirements for Ponds and Constructed Wetlands 56

1

Requirements

1.1 Context

Seattle's creeks, lakes, and bays play an important role in the quality of life for the people who live, work and play in the Puget Sound region. Many swim, boat, and fish in these waters, and many others enjoy the plants and wildlife these aquatic habitats support. Long before Seattle was developed, wetlands, meadows and forests supported these aquatic habitats by retaining much of the rainfall and releasing the runoff slowly throughout the year to streams, lakes and estuaries. As Seattle has developed, urban stormwater runoff from decreased vegetation and increased impervious surface has compromised the health of Seattle's aquatic resources. In addition, downstream properties may be subject to flooding from increased imperious surface upland. Now, Seattle residents, businesses and agencies are faced with the challenge of protecting the waters that make Seattle the "Emerald City," while continuing to build and enhance the civic amenities of a thriving urban center.

Under the Federal Clean Water Act, the Washington State Department of Ecology regulates the impacts of non-point pollution on water quality through the National Pollutant Discharge Elimination System (NPDES) municipal stormwater permit. As a condition of the City of Seattle's NPDES permit, the City regulates development and land use activities that impact the quality and quantity of stormwater runoff through the Seattle Municipal Code, *Stormwater, Grading and Drainage Control Code* (Stormwater Code). To protect and enhance the health of Seattle's creeks, lakes and bays, flow control standards for development are designed to lower the peak flow in urban creeks, decrease downstream flooding, and reduce combined sewer overflow events.

1.2 Purpose of this Rule

This document provides the technical requirements and guidance necessary for complying with the flow control requirements prescribed in the Stormwater Code. Projects meeting the thresholds described in this Rule must install flow control facilities to meet the discharge rate requirements prescribed in the Stormwater Code, unless approved by the Director of SPU. The flow control options and associated technical requirements are intended for private development. Public facilities and facilities in the public right of way must comply with the City of Seattle Standard Plans for Municipal Public Works Construction and other regulations governing work in the public right of way.

Definition

Flow control facility *means a method for controlling the discharge rate of stormwater runoff from a site.*

1.3 Discharge Point Requirements

The discharge of drainage water from a project site shall be limited to one or more of the discharge points listed below, unless otherwise approved by the Director of Seattle Public Utilities:

- A public piped storm drain; or
- A natural or constructed drainage location, such as a designated receiving water, or an existing stream, lake, river, ditch, or culvert system; or
- A public combined sewer.

When more than one discharge point is available, the Director of Seattle Public Utilities may specify the discharge point and may require that drainage water be discharged at a combination of the above locations to preserve existing water courses and riparian rights or to prevent damage from drainage water. When specifying the discharge point(s), the Director shall consider the need to protect streambanks from erosion, to protect the water table, and to prevent downstream flooding and erosion, sewer overflows, and groundwater problems. Drainage water shall not be discharged to a public sanitary sewer, unless it is determined by the Director of Seattle Public Utilities that:

- A sewer designated as 'sanitary' in the Seattle Public Utilities records was originally constructed as a combined sewer, and there is no other feasible alternative, or
- The drainage water is of such likelihood to carry significant pollutants that it is determined by the Director of Seattle Public Utilities, with the concurrence of King County, that the drainage water shall be discharge to the sanitary sewer for pollution control purposes.

FYI

Project sites without one of the approved discharge points may apply for an exemption from side sewer connection as specified in the Side Sewer Code.

1.4 Stormwater Code Flow Control Requirements

The Stormwater Code prescribes the following flow control requirements for new development:

> *The peak drainage water discharge rate from the portion of the site being developed shall not exceed 0.2 cubic feet per second per acre under 25-year, 24-hour design storm conditions or 0.15 cubic feet per second per acre under 2-year, 24-hour design storm conditions unless the site discharges water directly to a designated receiving water or to a public storm drain which the Director of SPU determines has sufficient capacity to carry existing and anticipated loads from the point of connection to a designated receiving water body. Projects with more than 2,000 square feet of new and replaced impervious surface shall be required to install and maintain a flow control facility, in accordance with rules promulgated by the Director, that is sized for the volume of runoff routed through the facility. Approved exceptions and flow control methods may be prescribed in rules promulgated by the Director. (22.802.015.C2)*

The following additional requirement applies for projects that add or replace 5,000 square feet of impervious surface or create one acre or more of land disturbing activity:

> *Effective January 1, 2001, in addition to the discharge rate specified in Section 22.802.015, the peak drainage water discharge rate shall not exceed 0.5 cubic feet per second per acre in a 100-*

> *year, 24-hour design storm for portions of the site being developed that drain to a Class A or Class B Riparian Corridor, excluding Bitter Lake and Haller Lake, as defined by Section 25.09.020 or to a drainage control system that drains to a Class A or Class B Riparian Corridor, excluding Bitter Lake and Haller Lake. (22.802.016.B1)*

Definitions

Flow control *means controlling the discharge rate of stormwater runoff from the site through means such as infiltration or detention.*

Impervious surface *means any surface exposed to rainwater from which most water runs off including, but not limited to, paving, packed earth material, oiled macadam, or other treated surfaces, and roof surfaces, patios, and formal planters.*

Public storm drain *means the part of a public drainage control system which is wholly or partially piped, is owned or operated by a public entity, and is designed to carry only drainage water.*

Public combined sewer *means a publicly owned and maintained sewage system which carries drainage water and sewage and flows to a publicly owned treatment works.*

Designated receiving waters *means the Duwamish River, Puget Sound, Lake Washington, Lake Union, and the Lake Washington Ship Canal, and other receiving waters designated by the Director of SPU as having the capacity to receive drainage discharges.*

Class A *or* ***Class B Riparian Corridors*** *are stable established streams and lakes that flow year-round and/or support salmonids, and include but are not limited to, corridors that have an established floodplain as mapped by the FEMA Flood Insurance Program, and include Longfellow, Thorton, Pipers, Ravenna, Mapes, DeadHorse/Mill, Maple Leaf and Little Brook Creeks, and Haller and Bitter Lakes.* ***Class B Riparian Corridors*** *are not mapped by FEMA and are intermittent streams without salmonids that still demonstrate a high water mark.*

When necessary to accomplish the purposes of the Stormwater, Grading and Drainage Control Code, the Directory of Seattle Public Utilities may require detention for the 2-year, 25-year, or 100-year design storm in the following circumstances:

- A pumped drainage system where a drainage system overflow or pump failure would cause a public hazard or private property damage, or
- Cases in which there is limited downstream capacity and drainage-related flooding problems are know to occur.

FYI

In addition to flow control requirements, development projects with one acre or more of land disturbing activity or addition or replacement of 5,000 square feet or more of impervious surface may be subject to the stormwater treatment requirements in the Stormwater Code (unless the entire project drains to a public combined sewer.) Refer to the Stormwater Code and/or Stormwater Treatment Technical Requirements Manual for more information on this requirement.

The table below summarizes the flow control and stormwater treatment requirements based on project threshold and discharge destination.

Table 1. Summary of Stormwater Control Requirements

<table>
<tr><td></td><td colspan="3">Drainage Destination</td></tr>
<tr><td>New and Replaced Impervious Surface</td><td>Receiving Water Body</td><td>Class A or Class B Riparian Corridor</td><td>Public Combined Sewer</td></tr>
<tr><td>< 2,000 sf</td><td colspan="3">No Flow Control or Stormwater Treatment Required</td></tr>
<tr><td>2,000 – 5,000 sf</td><td></td><td colspan="2">25-year Detention Required</td></tr>
<tr><td>> 5,000 sf*</td><td>Treatment may be required. See Treatment Directors' Rule.</td><td>100-year Detention Required
Treatment may be required. See Treatment Directors' Rule.</td><td></td></tr>
</table>

* or one acre or more of land disturbing activity.

1.5 Principles of Flow Control

When rain falls, it may soak into soil as infiltration, it may be absorbed by vegetation and return to the atmosphere as evapotranspiration, or it may collect and flow off roofs, pavement or saturated soil as stormwater runoff. Long before Seattle was developed, wetlands, meadows and forests retained much of the rainfall and released runoff slowly throughout the year to streams, lakes and estuaries. When Seattle developed, vegetation decreased and impervious surface increased, causing higher volumes and much faster stormwater runoff. Increased runoff has compromised the health of Seattle's aquatic resources. **Figure 1** illustrates these impacts by comparing the rate of runoff over time (the hydrograph) from a pre-developed condition with the hydrograph from a developed condition. A developed site has much more runoff, flowing at a much faster rate.

Now that Seattle is fully developed, no one project can turn the clock back, however each contribution to slow down runoff and keep water on site helps keep Seattle's creeks and water bodies healthy. To protect and enhance the health of Seattle's creeks, lakes and bays, flow control standards for development are designed to lower the peak flow in urban creeks, decrease downstream flooding, and reduce combined sewer overflow events. Flow control attempts to mitigate the impacts of urban development by replenishing vegetated cover and pervious surfaces to slow stormwater release rates and increase stormwater infiltration into local soils. When clay soils or landslide prone areas discourage infiltration or site conditions restrict vegetative techniques, underground detention systems can slow the rate of runoff.

Figure 1. Pre-developed and Developed Hydrographs

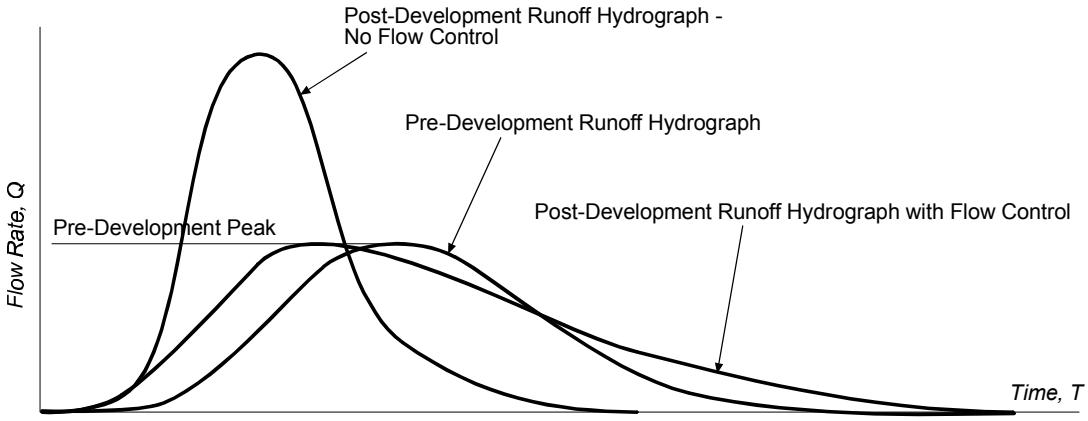

Diagram showing the relationship between pre-development hydrographs, post-development hydrographs, and post-development hydrographs with flow control

1.6 Stormwater Management Design Options

Several methods may be used to manage stormwater flow rates. Acceptable methods include:

- Impervious Surface Reduction Credit (reducing the total impervious surface on site),
- Detention Facilities (tightlined stormwater planters, detention vaults or tanks),
- Bioengineered Facilities (vegetated stormwater management systems),
- Infiltration Facilities (infiltration facilities where conditions permit).

These stormwater management design options and design methods are explained below.

Impervious Surface Reduction Credit

Impervious surface reduction is recommended as a first step in managing stormwater on site. Flow control and stormwater treatment requirements are based on the amount of new and replaced impervious surface. The amount of impervious surface may be reduced with any of the best management practices listed below in **Table 2**. Impervious surface reduction credit is applied as described in **Table 2** and **Appendix B**. If the total impervious surface for the project is reduced below the flow control threshold (2,000 if discharging to a public combined sewer, or a Class A or Class B Riparian Corridor), then additional flow control is not required. If application of impervious surface reduction credit does not lower the total impervious surface of the project below the requirement threshold, then the modified total impervious surface for the project may be used to design additional stormwater management facilities. Specifications for Impervious Surface Reduction designs are included in **Appendix B**.

Table 2. Impervious Surface Reduction Designs

Impervious Surface Reduction Design	Credit	Modification	Description
Porous pavement	Modify curve number	Paving replacement	Reduces and cleanses runoff from pavement
Eco-roof	Varies	Roof replacement	Reduces and cleanses roof runoff
Roof garden	1 to 1	Partial Roof replacement	Reduces and cleanses roof runoff
Landscape planter	1 to 1	Paving replacement	Planter slows runoff and drains to pavement

Bioengineered and Infiltration Facilities

Bioengineered and infiltration systems are stormwater management facilities that use soil, gravel or vegetation to detain and cleanse stormwater runoff. Vegetated and infiltrating systems have additional benefits over standard detention systems such as increased infiltration, pollution reduction, and in some cases, reduced cost. However suitability varies according to soil conditions and other site constraints. For more information on requirements see Chapter 3.

Definition

Infiltration *system means a drainage facility that temporarily stores, and then percolates stormwater runoff into the underlying soil. Examples include but are not limited to infiltration trenches, ponds, vaults, and tanks.*

Table 3. Bioengineered and Infiltration Facilities

Facilities	Function
Bioengineered Planting Strip	Collects, filters and conveys stormwater; appropriate discharge required
Infiltration Planter	Collects, filters and infiltrates stormwater
Infiltration Trench	Collects and infiltrates stormwater
Drywell	Collects and infiltrates stormwater

Detention Systems

Detention systems detain stormwater flow before discharging to the public drainage control system, or other approved discharge point. Detention systems may be the only option if space is limited on site, if the site is located in, or within a buffer of, one of the critical areas described in Chapter 3, or if soils do not meet minimum infiltration rates. Chapter 3 includes specifications for two standard detention systems: detention tanks and detention vaults. Specifications are also included for a Stormwater Planter, which has the added benefit of filtering stormwater before discharging to an approved discharge point. For more information on standard detention systems, refer to Chapter 2: Design Specifications for Detention Facilities.

Definition

Detention system *means a facility designed to control the discharge rate of stormwater runoff from a site by detaining flows.*

Table 4. Detention Facilities

Facility	Function
Stormwater planter	Detains and cleanses stormwater through soil, vegetation and reservoir storage
Detention tank or vault	Detains stormwater through storage and controlled release orifice

1.7 Facility Design Methods

If the total modified impervious surface is less than 5,000 square feet then facility size requirements may be determined with the sizing tables provided in Chapters 2 and 3. If the total modified impervious surface of the project is 5,000 square feet or greater, then the appropriate hydrologic analysis method described below must be used. A simple Excel model is also available at the permit counter that calculates volumes for detention tanks and vaults using the SBUH method.

1.8 Hydrologic Analysis Method

Flow control facilities should be sized based on the Santa Barbara Urban Hydrograph (SBUH) method[1] with the City of Seattle hyetograph **(Appendix A)**. The method and parameters are briefly described below. The SBUH method calculates detention volumes based on the area of impervious surface, the area and degree of pervious surface, the time of concentration, and the design storm hyetograph for a specific 24-hour event. The parameters should be based on the following:

Area: The calculations must include the total pervious and impervious area draining to the facility.

Curve Number: Curve numbers (CN), used to account for the degree of perviousness on site, have been developed by the Soil Conservation Service (SCS) based on a combination of soil type and land use called the "soil-cover complex." **Table 5** shows the CNs, by land use description, for the four hydrologic soil groups. For purposes of designing flow control facilities, the curve number shall be 98 for impervious areas, and 85 or greater for pervious surfaces, unless a soil report by an experienced geotechnical/civil engineer indicates that the site soils are sufficiently pervious to allow a smaller SCS curve number to be used.

Time of Concentration: Time of concentration (T_c), is the time it takes for runoff to travel from the hydraulically most distant point of the drainage area. T_c is computed by summing all the travel times for consecutive components of the drainage conveyance system. T_c influences the shape and peak of the runoff hydrograph. Urbanization and steep slopes usually decrease T_c, thereby increasing peak discharge. T_c can be increased as a result of either ponding or by reduction of land slope through grading.

[1] Other hydrograph methods such as the Stormwater Management Model (SWMM), versions 4.2 and XP, developed by the Environmental Protection Agency (EPA), may be used if approved by the Director.

Table 5. SCS Western Washington Runoff Curve Numbers, 1982

LAND USE DESCRIPTION		CURVE NUMBERS BY HYDROLOGIC SOIL GROUP			
		A	B	C	D
LAND COVER	**CONDITION**				
Cultivated land (I)	winter condition	86	91	94	95
Mountain open areas	low growing brush & grasslands	74	82	89	92
Meadow or pasture		65	78	85	89
Wood or forest land	Undisturbed	42	64	76	81
Wood or forest land	young second growth or brush	55	72	81	86
Orchard	with cover crop	81	88	92	94
Open spaces, lawns, parks, golf courses, cemeteries, landscaping	Good: grass cover on ≥75% of the area	68	80	86	90
	Fair: grass cover on 50-75% of the area	77	85	90	92
Gravel roads & parking lots		76	85	89	91
Dirt roads & parking lots		72	82	87	89
Impervious surfaces, pavement, roofs etc.		98	98	98	98
Open water bodies: lakes, wetlands, ponds		100	100	100	100

Design Storm Hyetograph

The design storm hyetograph is essentially a plot of rainfall depth versus time for a given design storm frequency and duration. It is usually presented as a dimensionless plot of unit rainfall depth (increment rainfall depth for each time interval divided by the total rainfall depth) versus time. The hyetograph provided in Appendix A must be used for hydrograph analysis to size flow control facilities. This City of Seattle hyetograph is based on a SCS Type 1A that has been modified so that 9.92% of the rainfall occurs during the ten-minute period at the peak of the storm event. This modified SCS Type 1A hyetograph causes a higher design flow to be computed than would be computed using the standard SCS Type 1A hyetograph. This modification sizes stormwater facilities larger to account for the likelihood of sequential storm events. The design storm hyetograph is constructed by multiplying the dimensionless hyetograph times the rainfall depth (in inches) for the design storm. For the City of Seattle, the following values should be used:

6-month, 24-hour storm	1.075 inches
2-year, 24-hour storm	1.680 inches
25-year, 24-hour storm	3.125 inches
100-year, 24-hour storm	3.840 inches

The Santa Barbara Urban Hydrograph (SBUH) Method

The SBUH method uses two steps to synthesize the runoff hydrograph:

1. Compute the instantaneous hydrograph, I(t), in cfs, at each time step, dt, as follows:

$$I(t) = 60.5\ R(t)\ A/dt$$

where:
R(t) = total runoff depth (both impervious and pervious runoffs) at time increment dt, in inches (also known as precipitation excess)
A = area in acres
dt = time interval in minutes[2]

2. Compute the runoff hydrograph by routing the instantaneous hydrograph I(t), through an imaginary reservoir with a time delay equal to the time of concentration, T_c, of the drainage basin. The following equation estimates the routed flow, Q(t):

$$Q(t+l) = Q(t) + w[I(t) + I(t+l) - 2Q(t)]$$

where:
w = $dt/(2T_c + dt)$
dt = time interval in minutes

For more information on the SBUH method or parameters, refer to the Stormwater Management Manual for the Puget Sound Basin, Ecology 1992 or King County's 1990 Surface Water Design Manual.

1.9 Planter Sizing Method

The following method or equivalent should be used to size the Infiltration Planter, the Stormwater Planter and the Bioengineered Planting Strip.

Infiltration in the planter is calculated using a water balance approach where inflow volume into the planter equals the storage volume in the planter plus the outflow volume from the planter. The storage volume in the planter is estimated as:

$$S_e = A_p D_p q_e \qquad (1)$$

Where,
S_e = Effective storage volume, Area of planter, ft^3
A_p = Area of planter, ft^2
D_p = Depth of planter, ft
q_e = effective porosity, ft^3/ft^3

The effective porosity is defined as

$$q_e = h - q_r \qquad (2)$$

Where,
q_r = residual moisture content after soil has thoroughly drained, ft^3/ft^3
h = porosity, ft^3/ft^3

[2] A maximum time interval of 10 minutes should be used for all design storms of 24-hour duration. A maximum time interval of 60 minutes should be used for the 100-year, 7-day design storm.

The effective porosity for the topsoil of loamy sand was estimated as 0.34 based on a porosity of 0.43 and residual moisture content of 0.09 (Chow et al., 1988). The value for the pea gravel layer was estimated as 0.31 based on porosity of 0.38 and residual moisture content of 0.07 (Chow et al., 1988).

The outflow from the planter is estimated using the Darcy's law for saturated flow conditions (Gaymon, 1994).

$$Q_{outflow} = A_p K_{avg} \frac{\Delta h}{L_t} \qquad (3)$$

Where,
$Q_{outflow}$ = Outflow rate from planter, cfs
A_p = Area of the planter
K_{avg} = Average infiltration rate[3] for the loamy sand and sand/gravel layer in the planter, in
Dh = total head of water ponding in the planter[4], in
L_t = Total length of soil in planter, $L_1 + L_2$, where L_1 and L_2 are the lengths of the sandy loam, and sand/gravel layers, respectively, inches.

The average infiltration rate K_{avg} through the planter is estimated as the average infiltration rate of the two layers, the loamy sand and the pea gravel layers (Gaymon, 1994; Luthin, 1965):

$$K_{avg} = \frac{L_1 + L_2}{\frac{L_1}{K_1} + \frac{L_2}{K_2}} \qquad (4)$$

Where,
L_1 =the depth of layer 1, in
L_2 =the depth of layer 2, in
K_{avg} =the average infiltration rate, in/hr
K_1 and K_2 = infiltration rates of the sandy loam and sand/gravel layers, in/hr

The outflow of the Infiltration Planter should be estimated in part with a composite average infiltration rate from the loamy sand layer and the sand/gravel layer accounting for two-thirds of the outflow. This assumption reflects the fact that the composite section covers two-thirds of the planter volume. The rest of the outflow is assumed to come through the non-composite (loamy sand) section of the planter.

Appendix E includes an example of the Planter Sizing Method illustrating how to use the equations described above to size a Stormwater Planter.

1.10 Submittal Requirements

As the Stormwater Code states:

[3] A correction factor of 2 should be applied to the hydrologic infiltration rate to obtain the design infiltration rate. According to soil properties defined in the Ecology 1992 manual, loamy sand should have a hydrologic infiltration rate of 2.41 inches per hour, and the gravel layer should have a hydrologic infiltration rate of 20 inches per hour.

[4] A conservative, constant head total should be used based on the depth of medium and no surface storage.

> *Applications for drainage control review and approval shall be prepared and submitted in accordance with provisions of the Stormwater Code, the Side Sewers Code, and with associated rules and regulations adopted jointly by the Directors of DCLU and SPU. The Director of DCLU may require additional information necessary to adequately evaluate applications for compliance with the requirements of the Stormwater Code, the Side Sewer Code and other laws and regulations, including SMC Chapter 25.09, Regulations for Environmentally Critical Areas. The Director of DCLU may also require appropriate information about adjoining properties that may be related to, or affected by, the drainage control proposal in order to evaluate effects on the adjacent property. This additional information may be required as a precondition for permit application review and approval.*

Standard Drainage Review

> *The following information shall be submitted to the Director for all projects for which drainage control review is required:*

> ***1. Standard Drainage Control Plan.*** *A drainage control plan shall be submitted to DCLU.*

A standard drainage control plan consists of the standard elements found in a drainage control system, including but not limited to downspouts, conveyance pipes, catch basins, and discharge from the site, that meet the requirements of the Stormwater Grading, and Drainage Control Code and applicable rules. For projects requiring detention, the standard drainage control plan must include the location of the flow control facility, the proposed discharge point and elevation, the lowest elevation of drainage water collection on the site.

Applications for projects that include less than 1 acre of land disturbing activities or less than the cumulative addition of 5,000 square feet of new and replaced impervious surface, may need to submit a comprehensive drainage control plan if one the following site conditions exist:

- Location in an Environmental Critical Area; or
- Absence of an apparent discharge point; or
- Presence of surface or underground drainage water originating from off the site that is discharged to or passes through the site, such as a surface stream, swale, ditch, lake, or bog or underground pipe or spring; or
- Proposed obstruction or relocation of an existing watercourse or disruption of existing drainage flowing to or through the site; or
- Other complex or unusual drainage circumstances determined by the Director of Seattle Public Utilities.

> ***2. Construction Stormwater Control Plan*** *(Standard Erosion and Sediment Control Plan). A construction stormwater control plan demonstrating controls sufficient to determine compliance with the requirements prescribed in the Stormwater Code. Refer to the Construction Stormwater Control Manual for specific technical and submittal requirements.*
>
> ***3. Memorandum of Drainage Control.*** *The owner(s) of the site shall sign a "memorandum of drainage control" that has been prepared by the Director of SPU. Completion of the memorandum shall be a condition precedent to issuance of any permit or approval for which a drainage control plan is required. The applicant shall file the memorandum of drainage control with the King County Department of Records and Elections so as to become part of the King*

> *County real property records. The applicant shall give the Director of SPU proof of filing of the memorandum. The memorandum shall not be required when the drainage control facility will be owned and operated by the City. A memorandum of drainage control shall include:*
> - *The legal description of the site;*
> - *A summary of the terms of the drainage control plan, including any known limitations of the drainage control facilities, and an agreement by the owners to implement those terms;*
> - *An agreement that the owner(s) shall inform future purchasers and other successors and assignees of the existence of the drainage control facilities and other elements of the drainage control plan, the limitations of the drainage control facilities, and of the requirements for continued inspection and maintenance of the drainage control facilities;*
> - *The side sewer permit number and the date and name of the permit or approval for which the drainage control plan is required;*
> - *Permission for the City to enter the property for inspection, monitoring, correction, and abatement purposes;*
> - *An acknowledgment by the owner(s) that the City is not responsible for the adequacy or performance of the drainage control plan, and a waiver of any and all claims against the City for any harm, loss, or damage related to the plan, or to drainage or erosion on the property, except for claims arising from the City's sole negligence; and*
> - *The owner(s)' signatures acknowledged by a notary public.*

Comprehensive Drainage Review

> *In addition to the submittal requirements for Standard Drainage Control Review, the following information is required for large projects--those that include 1 acre of land disturbing activities or the cumulative addition of 5,000 square feet or more of new and replaced impervious surface:*
>
> ***1. A Comprehensive Drainage Control Plan.*** *A comprehensive drainage control plan, in lieu of a Standard Drainage Control Plan, prepared by a licensed civil engineer shall be submitted with the permit application.*

The Comprehensive Drainage Control Plan depicts in detail a system designed in accordance with the requirements of the Stormwater Code and applicable rules. The plan shall include, but not be limited to the following:

- The professional stamp and signature of a licensed civil engineer.
- The Legal Description, and Legal Owner.
- Elevations tied to either the NAVD88 or the City of Seattle Datum; conversion factors generally are not acceptable.
- Existing and proposed drainage elements, including surface drainage patterns (by contours or spot elevations), public and private drainage utilities, existing natural drainage courses, and any off-site drainage elements affected by, or affecting, the on-site drainage.
- The design assumptions used to calculate the required storm water detention volume. These include the area of pervious and impervious surfaces, time of concentration, coefficient of run-off, and orifice size. If it is not practical to include this information on the plan then a separate drainage control report should be provided.
- Material specifications and standard notes. The storm drainage system shall be constructed according to approved plans. Any deviation from the approved plans will require written approval from the Director of Seattle Public Utilities. A copy of these approved plans must be on the job site whenever construction is in progress. All required storm water detention facilities must be

constructed and in operation prior to any paving unless otherwise approved by Seattle Public Utilities.

Four copies of the comprehensive drainage control plans, drafted on sheets the size as the associated building permit plans, should be submitted with the building permit application plan set.

> ***2. Inspection and Maintenance Schedule****. A schedule shall be submitted that provides for inspection of temporary and permanent drainage control facilities, treatment facilities, and source controls to comply with the requirements in the Stormwater Code.*
>
> ***3. Off-site analysis.*** *When the portion of a site being developed is within ¼ mile of a stream and discharges directly to that stream, or to a drainage system that discharges to that stream, an analysis of impacts to off-site water quality resulting from the project prepared in accordance with the Stormwater Code shall be submitted.*

2

Design Specifications for Detention Facilities

2.1 Detention Systems

Layout of the Detention System

Figure 11 in Appendix C shows an example of a detention system on a typical site, including a detention pipe, connections of downspouts and catch basins, and a discharge point. There must be 4 feet of clearance between the detention pipe and buildings or property lines. If this clearance is not possible, SEATRAN must approve the location, and may require a concrete pipe. The main components of a standard detention system (Figure 12, Appendix C) are a detention pipe that temporarily stores stormwater runoff, a flow control structure (a maintenance hole), and a flow control device. The underground detention pipe stores stormwater, which is released at the approved discharge rate through the flow control structure.

Flow Control Structure

Flow control structures must comply with the specifications outlined in the City's Standard Plan (Figure 13, Appendix C). The inside diameter of the flow control structure must be at least 4 feet to allow maintenance and repair access, and to accommodate stormwater overflow. A larger diameter manhole is required for corrugated metal pipes (CMP) greater than 30 inches in diameter, or for concrete pipe. For required flow control structure diameter relative to detention tank diameter size, see Figure 14. Access must be provided to the flow control structure from the ground surface with a circular ring and solid cover (Figure 15, Appendix C). A rectangular cover, or a cover that allows water to enter through the top of the flow control structure, may not be used. If the flow control structure is located in a driveway, the lid must be strong enough to bear the weight of vehicles. The ring and cover must be set so the flow control device or the ladder is visible at the edge of the access opening.

The invert elevation of the detention pipe must be at least 2 inches higher than the invert elevation of the outlet pipe. The top of the overflow pipe must be at least 6 inches below the bottom of the manhole's top slab, and must be no lower than the upstream end of the detention pipe. The minimum diameter of the flow control structure outlet pipe is the same as the minimum diameter required for the general drainage system pipe (also referred to as the service drain), which is 6 or 8 inches, depending on the size of the project. See Side Sewer Specifications. The Side Sewer Permit application and the Standard Drainage Control Plan must include the flow control structure rim elevation, the storage pipe invert elevation, the outlet pipe invert elevation, and, the elevation of the top of the storage pipe, and the elevation of the top of the overflow pipe.

Flow Control Device

A flow control device, made from a "tee," is mounted inside the flow control structure (Figure 13, Appendix C). The tee has a cap or plug in the bottom through which a small hole (orifice) is drilled. The orifice in the flow control device must be at least 1/2 inch in diameter. For projects required to meet the 100-year design storm discharge rate, the Comprehensive Drainage Control Plan must specify a dual orifice flow control device, indicating the height and diameter of the second orifice and supporting calculations. (Figure 18, Appendix C) The flow control device must be PVC, not Corrugated Metal Pipe (CMP). The mounting straps and the outlet adapter must be installed in a manner that will make the flow control device easily removable for maintenance, repair, or replacement. For a flow control device with a 6-inch or smaller diameter outlet pipe, use one strap placed above the outlet pipe. For a device with an 8-inch or larger diameter outlet pipe, use two straps—one placed above the outlet pipe, and one below the outlet pipe. The outlet pipe adapter may be a plastic, bell-end pipe or a plastic coupling with rubber gaskets. The outside of the pipe or coupling must be sand blasted, epoxy coated, and sand impacted to bond with the flow control structure. This preparation must be done by the manufacturer or supplier, not in the field.

Detention Pipe Size

To determine the size of the detention pipe and the orifice for standard plans, see **Table 6:** Standard Plan Detention System Design Parameters or the Excel model described in Chapter 1. The slope of the detention pipe must be 0.5 % to use this table. Round off your project's impervious surface to the next larger 500 square feet. Impervious surface, for the purpose of these calculations, includes all areas to be covered with buildings or other structures, porches, eaves, or other overhangs, and any paved or graveled areas that are part of the project whether they are located on the site or in adjacent public street areas. Detention pipes larger than 36 inches in diameter may be connected to a flow control structure by a transition pipe, at least 2 feet long and at least one-half the diameter of the detention pipe. The diameter of the transition pipe must be at least 30 inches and not more than 48 inches. Larger diameter pipes must be vented. For transition pipe options see Figure 14, Flow Control Design Options.

Detention pipes more than 50 feet long must provide a cleanout. Detention pipes more than 100 feet long must have a maintenance hole (Figure 16, Appendix C) at each end to allow for maintenance and repair. Detention pipes over 200 feet long must have a maintenance hole at the upstream end and a cleanout at least every 100 feet.

Table 6. Size Requirements for Standard Plan Detention System

Impervious area (sf)	Required storage volume (cf)	Detention pipe diameter and length and orifice size					
		24" diameter pipe		30" diameter pipe		36" diameter pipe	
		Length	Orifice Dia.	Length	Orifice Dia.	Length	Orifice Dia.
2000	138	36'**	½"	22'	1/2"	13'	1/2"
2500	172	47'	½"	29'	1/2"	18'	1/2"
3000	206	58'	½"	36'	1/2"	22'	1/2"
3500	240	68'	5/8"	42'	5/8"	27'	1/2"
4000	274	79'	5/8"	49'	5/8"	32'	5/8"
4500	309	90'	5/8"	56'	5/8"	37'	5/8"
5000	343			63'	5/8"	42'	5/8"

Detention Pipe Material and Diameter

The detention pipe must be made of approved materials and must meet the specifications listed in **Table 7**. The material, diameter, and specification of pipe selected must be indicated on the Side Sewer Permit application, required before installing the drainage system. If the detention pipe is located under a building, a load analysis must be evaluated by a licensed civil engineer to determine the pipe specifications. The pipe must not be located under the foundation or have pressure exerted on it by the foundation. Flow control structures located under buildings should be accessible to vehicles. Do not use Corrugated Metal Pipe for detention pipes constructed in a public right-of-way, an Environmental Critical Area or Geologic Hazard Area.

Table 7. Detention Pipe Material and Diameter

Pipe Material	Pipe diameter	Specification
Concrete	24" or larger	ASTM C76 CL IV
Corrugated Metal	24" in diameter	14 gauge (24" CMP is not usually available in 12 gauge)
	30" to 72" in diameter	12 gauge
	84" or larger in diameter	10 gauge
• Galvanized or aluminized corrugated steel		AASHTO[5] M36. Galvanized steel pipe must have Asphalt Treatment #1.
• Corrugated aluminum alloy		ASSHTO M196, with no Perforations.
"ADS" or equal	All	AASHTO M294 Type S
Ductile Iron	12" or larger	ANSI[6] A21.51 Class 50, with push-on joints
PVC	12'" or larger	12" to 15" diameter: ASTM D3034 SDR35 18" in diameter: ASTM F679

[5] American Association of State Highway and Transportation Officials.
[6] American Society for Testing and Materials.

Detention Pipe End Plates and Connections

The upstream end of the detention pipe must have a watertight end plate or plug of standard manufacture (not constructed in the field) and must be made from the same material as the detention pipe. The inlet pipes may connect to the flow control structure or the detention pipe. Connections to the detention pipe are most easily made through the end plate. For connections through the side of a corrugated metal detention pipe, consult Figure 17 in Appendix C.

Cover, Bedding, and Slope

The bedding required for detention pipes is the same as for other pipes in the drainage system. Use washed, crushed aggregate type 22 for corrugated metal pipes. Use 3/8-inch washed gravel (City-Mineral Aggregate, Type 9) for other pipes. Place at least 4 inches of gravel under the pipe. The gravel must fill the trench to a point half-way up the sides of the pipe (to the "spring line"). Provide at least 2 feet of cover over a detention pipe. For single-family and duplex residences, 18 inches of cover is allowable. Before a side sewer permit is signed-off as completed, a SEATRAN inspector must approve the installed system, including the detention pipe and the flow control structure, after it is bedded but before it is covered with soil. The standard slope for detention pipes is 0.5 %. The inlet pipe to the detention pipe and the outlet pipe from the flow control structure must have at least a 2 % slope, the same as required for other service drain pipes.

2.2 Detention Vaults

Detention vaults are allowed for comprehensive drainage control plans. Applicants for a standard plan may use the volumes listed in **Table 6:** Size Requirements for Standard Plan Detention System and must provide calculations that demonstrate that the vault provides the same volume as a detention pipe system. For large projects submitting a comprehensive drainage control plan, the detention volume required in a vault varies from that required in a pipe, and the engineer's calculations must reflect this fact. The flow control device should be the same as that used in a standard system.

2.3 Stormwater Planter

Figure 2. Stormwater Planter

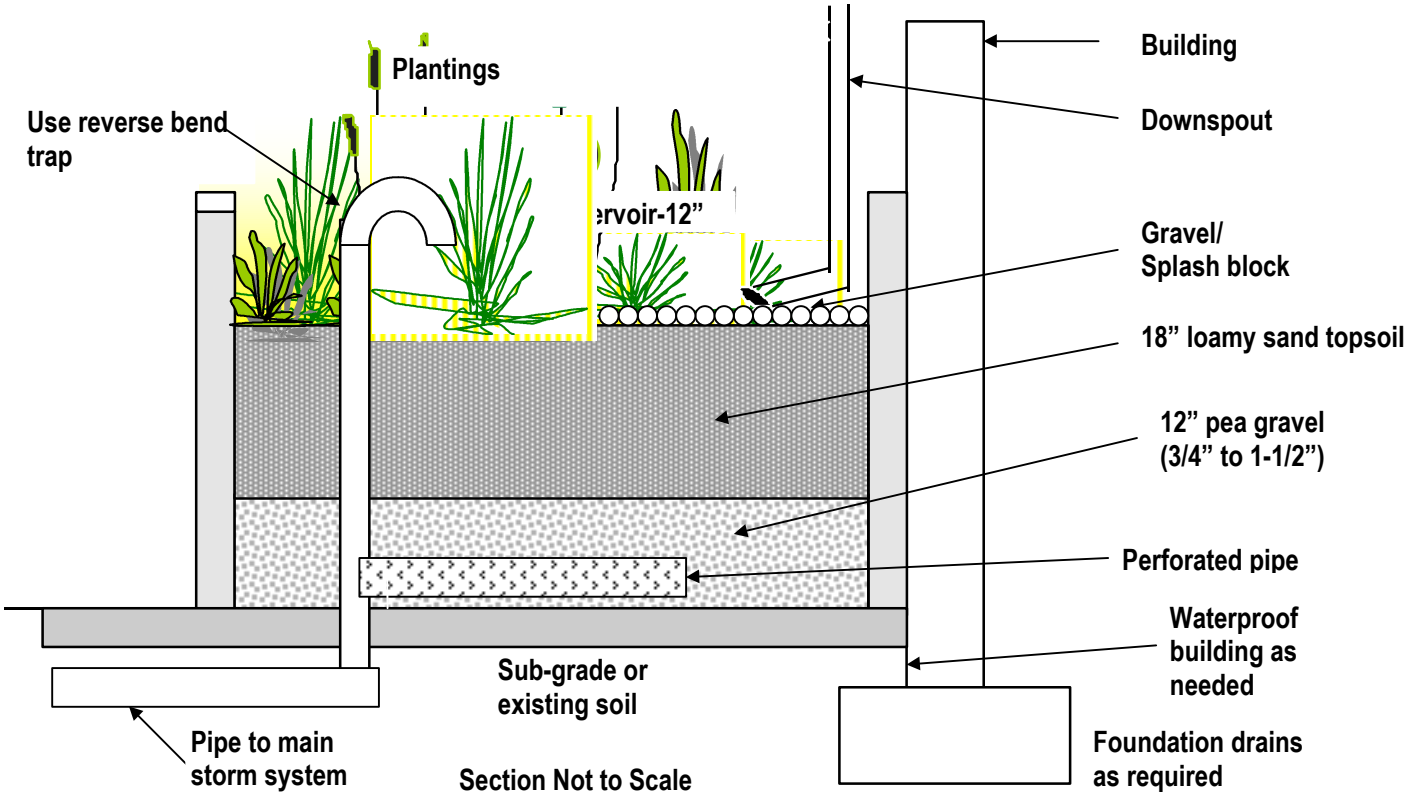

Description

The Stormwater Planter is designed with an impervious bottom or is placed on an impervious surface. Flow control is obtained by storing the water in a reservoir above the soil. The additional benefit of pollutant reduction is achieved as the water filters through the vegetation and soil. Planters may be in-ground or above grade. For soils with a minimum infiltration rate of 4 inches/hour, see the Infiltrating Planter in Chapter 3.

Technical Requirements

Minimum planter width is 24 inches. Planters shall include a 12-inch layer of uniformly graded washed gravel with nominal size from 3/4" to 1-½," covered by a minimum of 18 inches of loamy sand topsoil with an infiltration rate of 2"/hr. The planter must include an overflow and be designed to drain to an approved discharge point. Plantings shall be appropriate for moist and seasonally dry conditions, and can include rushes reeds, sedges, iris, dogwood, currants, and numerous other shrubs, trees, and herbs/grasses.

Sizing

For small projects, the sizing table below may be used to determine the required square footage of the stormwater planter. For large projects, facilities must be designed according to the Planter Sizing Method and approved by a licensed civil engineer. For projects required to detain the 100-year, 24-hour design storm, additional flow control facilities may be required.

Table 8. Size Requirements for Stormwater Planter

	Square footage of impervious surface draining to facility						
	2000	2500	3000	3500	4000	4500	5000
Required trench area (sf)	115	141	169	197	225	253	281

2.4 Surface Detention

A comprehensive drainage control plan prepared by a licensed civil engineer is required for surface detention. Allowable storage areas for surface detention include parking lots, dry ponds, or permanent ponds. The engineer shall calculate the detention volume using the same release rate and design storm used for other forms of detention.

Additional Specifications

- Provide at least 2 feet of clearance between the first "occupied" floor and the top of the detention pond overflow. "Occupied floor" includes areas with equipment, boilers, etc., but not parking areas.
- Depth of storage in parking lots must be 3 inches or less for parking serving retail and office buildings, and 6 inches or less for parking serving commercial truck traffic only.
- The embankment of surface ponds must be compacted and stabilized for erosion control.
- Use a standard flow control structure. The rim of the flow control structure will be higher than the surface detention area and, in the case of parking lot surface detention, is usually placed in a nearby landscaped berm.
- Place a catch basin at the lowest point in the surface storage facility and connect it to the flow control structure.
- Set the overflow pipe at an elevation at least 12 inches below the top of the pond embankment. For parking lot storage, set the overflow elevation to provide 12 inches minimum of freeboard, above a twenty-five year design storm elevation, to adjacent property lines and buildings.

3

Design Specifications for Bioengineered and Infiltration Facilities

3.1 Description

Bioengineered and Infiltration flow control facilities use soil, gravel or vegetation to store, filter and infiltrate stormwater. Stormwater management facilities that use soil and vegetation have additional benefits over standard detention systems such as increased infiltration, pollution reduction[7], and in some cases, reduced cost. However, due to the geologic and topographic conditions in Seattle, not all sites are suitable for discharging stormwater into the ground. In addition, Bioengineered and Infiltration facilities are not permitted in the public right-of-way unless approved by the Director of Seattle Public Utilities. Refer to the applicability section below to determine whether your site is suitable for these options.

Infiltration facility means a system designed to reduce or eliminate surface water runoff through on-site percolation. Infiltration facilities may be used in areas with relatively high infiltration rates, and, if designed to accommodate the required design-storm, may not need to discharge to the public drainage control system. Benefits of infiltration include the preservation of baseflow in streams, recharge of groundwater, and reduction of runoff peak flows. Infiltration facilities may include trenches, ponds, vaults, drywells, or tanks. This section outlines the minimum requirements for infiltration facilities in general and provides specific design criteria for ***infiltration trenches, infiltration planters*** and ***dry wells.***

Bioengineered systems use soil and vegetation to detain and cleanse stormwater, and then discharge to the public drainage control system. Bioengineered systems are appropriate for soils with a moderate infiltration rate. In addition to providing flow control, bioengineered systems improve water quality, and may be integrated with landscape design on site. This chapter includes specifications for ***bioengineered planting strips.*** The ***Stormwater Planter*** in Chapter 2, also designed with soil and vegetation, can be used for sites where discharging to the ground is prohibited.

The Director of Seattle Public Utilities may propose or approve alternative infiltration or bioengineered facilities that are determined to provide equal or greater flow control protection. However alternative infiltration facilities must meet the minimum general requirements and setbacks described in this section.

[7] The infiltration facilities describing in this section are designed for flow control, and do not satisfy the stormwater treatment requirement. If a project requires treatment, stormwater runoff must be treated before draining to the infiltration facility. Requirements and technical guidance for stormwater treatment facilities are outlined in the City's *Stormwater Treatment Technical Requirements Manual*.

3.2 Applicability and Setbacks

- ***Geologic Hazard Areas.*** Infiltrating stormwater into the ground is not permitted within designated steep slope areas or landslide-prone areas as defined by the Regulations for Environmental Critical Areas (SMC 25.09). A geotechnical analysis is required for infiltration within 500 feet upslope of landslide prone areas (which includes areas of potential landslide due to geologic conditions, steep slopes and documented landslides), or within 50 feet upslope of the toe of a designated steep slope area.
- ***Structures.*** Geotechnical analysis is required for facilities within 20 feet from any structure or property line, or within 50 feet up-slope of a building when the slope is greater than 5%.
- ***Soils.*** For small projects using the design specifications outlined in this chapter, that are not located within the restricted zones described above, or within the buffers of restricted zones, no soils report is required and the Simple Soil Test Method may be used to determine the infiltration rate. For all other projects, the applicant must demonstrate through engineering analysis and the written opinion of a experienced geotechnical engineer that construction of a properly functioning infiltration facility is feasible. An experienced geotechnical engineer shall provide a report stating whether the site is suitable for the proposed infiltration facility, and shall recommend a design infiltration rate.
  - Unless geotechnical analysis demonstrates lower infiltration rates can be accommodated by the site and facility design, a minimum infiltration rate of .5 inch per hour is required for bioengineered facilities and a minimum infiltration rate of 4 inches per hour is required for infiltration facilities.
  - The base of all proposed facilities must be located at least three (3) feet above the seasonal high groundwater level, bedrock (or hardpan), and/or other impermeable layer. A minimum of three (3) feet of permeable soil must exist below the proposed facility.
  - The site must not contain contaminated soils. Sites which have been used in the past to dispose of materials or which may have been subjected to industrial or commercial contamination, leaks or spills must submit a geotechnical report indicating no contaminated soils exist on the site.

3.3 Siting Requirements

- Infiltration facilities shall not be located under buildings.
- Infiltration facilities may not be placed beneath pavement, or any surface that is subject to the compacting action of vehicular traffic, except for the following situations:
  - Infiltration facilities serving single family residences may be located under driveways.
  - Infiltration facilities may be located under pavement (except in the public right-of-way) that is not subject to vehicular traffic, provided that an overflow is placed at an elevation of at least one (1) foot below that of any overlying pavement and in a location that can accommodate the overflow. The overflow must be five (5) feet away from property lines unless it discharges to a stream or ditch.

3.4 Overflow Conveyance System

All systems must be designed with an overflow conveyance designed to convey the 25-year, 24-hour developed peak flow rate to the downstream storm drain system or other acceptable discharge location. An overflow shall be located at an approved discharge point, a minimum of five (5) feet from any property line unless the overflow discharges into a stream or a ditch. The overflow location must not result in significant adverse impacts, such as uncontrolled, erosive, concentrated flows, or other impacts to drainage systems of the adjacent or downhill property. Systems shall be designed with emergency surface storage on site equal to at least 10% of the design storm volume.

3.5 Construction Requirements

- Infiltration facility areas must be delineated with fences prior to construction to prevent compaction by heavy equipment. Care must be taken not to compact soil during construction.
- No runoff from construction sites shall be allowed to enter the facility prior to completion of all construction activities, including re-vegetation and final site stabilization. Facilities may not be used as temporary sediment traps during the construction phase. If construction runoff enters the infiltration facility prior to site stabilization, all contaminated materials must be removed and replaced with new, clean materials before final inspection.
- Final construction of facilities shall not be done until after other site construction has finished and the site has been properly stabilized with permanent erosion control practices. If the area contributing to the facility cannot be stabilized prior to the start of construction, sediment laden runoff must be diverted away from the facility construction area.

3.6 Submittal Requirements

1. Drainage Control Plan

In addition to other specified information, the Drainage Control Plan must include:

- Topography of the site and 50 feet beyond the property boundary at 2 foot intervals (or 5 foot intervals for slopes greater than 15%)
- All structures or walls, which alter the perviousness or topography of the site
- Location of proposed pipes and infiltration facilities
- Overflow discharge points
- Sizing calculations, including drainage area contributing to the infiltration facility

2. An as-built drawing submitted prior to side sewer permit approval

3. A Soils Report (see also “Simple Soil Test Method” on pg. 24*)

The applicant must demonstrate through engineering analysis, and the written opinion of an experienced geotechnical engineer that construction of a properly functioning infiltration facility is feasible. An experienced geotechnical engineer shall provide a report stating whether the site is

suitable for the proposed infiltration facility, and shall recommend a design infiltration rate. The soils report must also contain the following information:

- A site map indicating locations of subsurface explorations and proposed infiltration facility.
- Explorations must extend a minimum of three feet below the proposed base of the facility. All explorations shall be at the same depth. At least one exploration should be taken for every 50 feet of trench length. One exploration should be taken within 20 feet of proposed drywell locations. (one exploration may be used for a cluster of drywells.) An additional exploration shall be taken for every 5,000 square feet of infiltrating surface area. Additional explorations may be required if, in the judgement of a experience geotechnical engineer, the soil characteristics vary greatly, the site is located in an area with a seasonal high groundwater table, or increasing the depth or number of explorations is necessary to accurately estimate the performance of the infiltration system. The exploration program may be decreased if, I the opinion of the experienced geotechnical engineer, the conditions are relatively uniform and the borings omitted will not influence the design or successful operation of the facility.
- Detailed soil logs for each exploration that include depth of hole, soil descriptions, the location of and depth to the seasonal high water table, bedrock, impermeable layer, and/or dissimilar soil layers if located during borings.
- Soils in each exploration shall be characterized by laboratory testing (grain size distribution for granular soils per ASTM Method D-422, Atterberg limits for silt and clay type soils per ASTM Method D-4318) and note any evidence of high ground water such as mottling or moisture, and variations and nature of stratification.
- Infiltration rates may be estimated on grain size distribution from the explorations. As a minimum, one soil gradation test per soil stratum in each test hole shall be performed within 2.5 times the maximum design depth of the water proposed for the infiltration facility, but with no less than 6 feet. This will result in a minimum of 2-3 soil gradation tests per soil stratum if the stratum is continuous across the facility. Below this depth, adequate soil gradation and classification testing shall be preformed to characterize the soil strata, but no less than one soil classification per test soil stratum. **Table 9** provides recommended design infiltration rates per grain size. In-situ testing, such as the Pilot Infiltration Test (PIT), may be required for larger facilities.

Table 9. Recommended Design Infiltration Rate based on ASTM Gradation Testing

D^{10} Size from ASTM D422 Soil Gradation Test (mm)	Design Infiltration Rate (in./hr.)
>/= 0.4	9
.3	6.5
.2	3.5
.1	2.0
.05	0.8

- A statement that soil conditions are adequate for the proposed infiltration system, and that no adjacent downstream private or public properties will be adversely affected by the infiltration of storm water on the site.

- Additional information as determined by DCLU or SPU due to the nature of the site or the proposed project.

***Simple Soil Test Method**

For Small Projects that are not located within the restricted zones, or within the buffers of restricted zones, a Simple Soil Test Method may be conducted, in place of a soils report developed by a experienced geotechnical engineer, to determine whether the site meets the minimum infiltration rate required for bioengineered or infiltration facilities. The soil test shall be conducted in accordance with the procedure described below:

1. Excavate test hole 6 inches in diameter at the site of the proposed infiltration facility. Complete excavation of test hole to 3 feet below the bottom of the proposed facility.
2. Carefully scrape the bottom and sides of the hole to provide a clean interface with the native soil. Remove all loose material from the test hole. Add two inches of coarse (1/2 to ¾ inch) washed gravel to the bottom of the hole.
3. Fill the hole with clear water to a minimum depth of 12 inches over the gravel. Care should be taken to direct water slowly to the graveled bottom to prevent erosion of the sides of the hole while filling with water. Keep water in the hole, by re-filling if necessary, for at least four hours and preferably overnight. If the soil, other than loose sand, has a dry appearance when the hole is initially dug, the soil must be allowed to swell overnight after the soaking period. If the soil was initially wet to saturation, proceed with the percolation rate measurement below after the initial four hours of soaking.
4. After saturating the soil and permitting it to swell, adjust the depth of water in the test hole to six inches over the gravel. From the surface, measure the reduction in water level over three 30-minute intervals. This average reduction in water depth over 30 minutes is used to calculate the percolation rate expressed as inches per hour.

3.7 Operation and Maintenance Requirements

Infiltration facilities and bioengineered systems can clog after extended use, thereby requiring system replacement. Proper maintenance methods will prolong the useful life of an infiltration facility. The property owner must comply with the maintenance requirements outlined in the Appendix for each facility.

3.8 Additional Conditions and Responsibilities

If not properly designed or maintained, or during intense storms, infiltration facilities may overflow to the surface and cause temporary flooding. When the City authorizes the use of infiltration on a site, the property owner and the experienced geotechnical engineer shall be responsible for determining the suitability of the site for infiltration and shall be responsible for any damage that may occur as a result of infiltration.

Infiltration and bioengineered facilities require regular maintenance and periodic replacement. The property owner is responsible for maintaining and replacing onsite infiltration and bioengineered facilities designed to meet the flow control requirement.

If the Director of Seattle Public Utilities determines (either before or after issuance of a side sewer permit for drainage), that the site topography and/or soils are unsuitable for infiltration, the property owner is responsible for design and installation of a suitable alternative, such as a detention pipe with controlled release, or an extension of a public storm drain.

3.9 Bioengineered Facilities: Bioengineered Planting Strip

Figure 3. Bioengineered Planting Strip

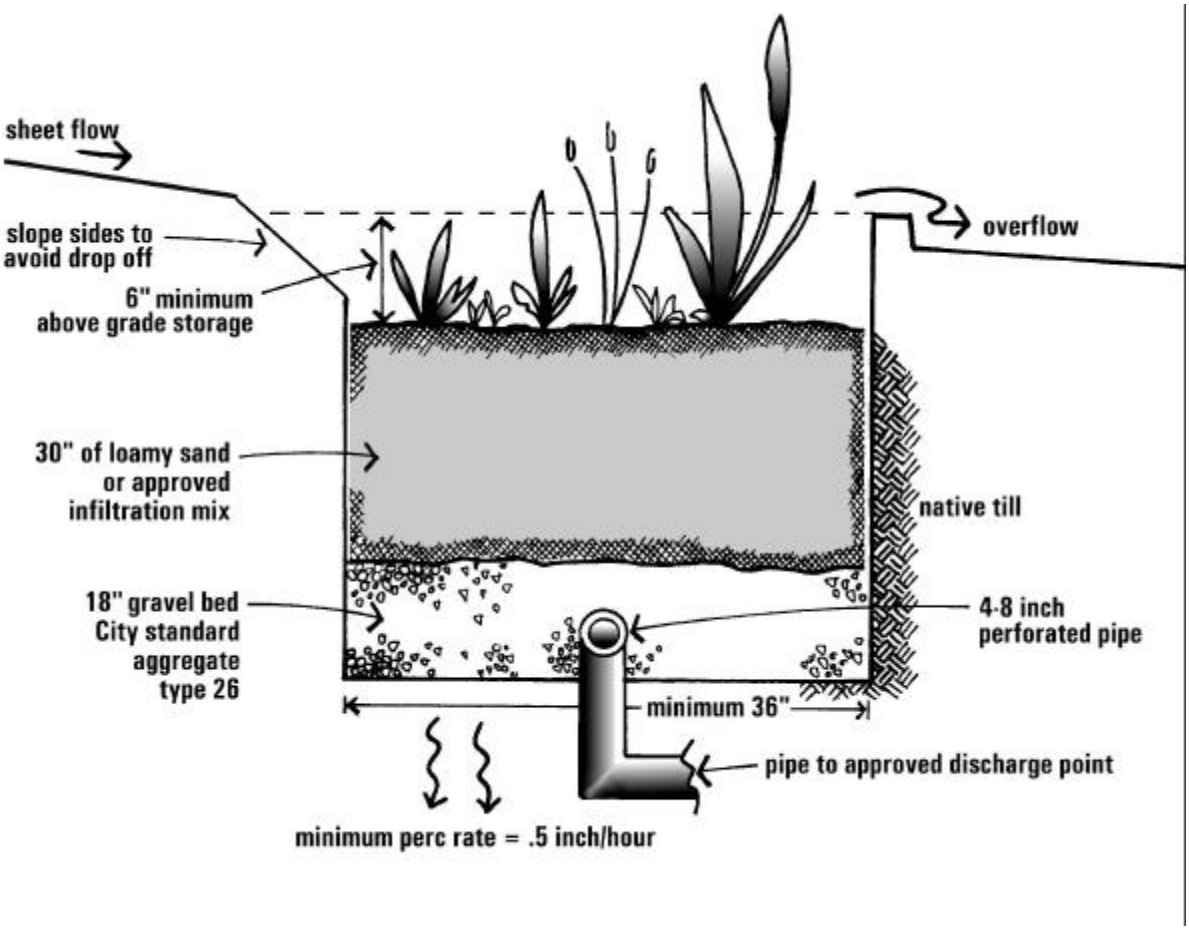

Description

A Bioengineered Planting Strip (see **Figure 3**) is an excavated trench backfilled with gravel and loamy sand and planted with groundcover and shrubs. Bioengineered Planting Strips must include an overflow system and a perforated pipe to convey excess drainage to the public drainage control system or other approved discharge point, (unless the soils report and calculations demonstrate full infiltration of the required design-storm.) Bioengineered Planting Strips may receive sheet flow from adjacent pavement, or may be modified to receive concentrated flows.

Design Requirements

Bioengineered planting strips must be designed according to the following criteria:

- Trenches designed to receive concentrated flows must use a conveyance pipe of ASTM 3034 SDR 35 or equivalent, and include a Type 241 catch basin with trap or sump and a central trench pipe (4" to 8" perforated pipe)
- For trenches designed to receive flow from adjacent pavement, the site must be graded so that runoff is directed in sheet flow across the length of the facility.
- Trenches should be excavated in a manner that does not disturb the native soil on the sides of the trench.
- The bottom of the trench must have a minimum longitudinal slope of 1-1/2% and a maximum slope of 2%.
- Trenches must be a minimum of three feet wide.
- The minimum depth of an infiltration trench 4–1/2 feet, including 6 inches of surface storage. The trench must be backfilled with:
  - a bottom layer of 18 inches of City standard aggregate type 26;
  - Covered with 30 inches of loamy sand (or approved infiltration mix) with a minimum discharge rate of 2 in./hr.
- Trenches shall have perforated pipe in the center of the gravel portion. The pipe shall be between four (4) inches and eight (8) inches in diameter. The pipe shall be:
  - PVC ASTM 3034 SDR 35, meeting the requirements of AASHTO M 278, or
  - perforated corrugated polyethylene underdrain pipe, Type S, meeting the requirements of AASHTO M 294, or equivalent.
- Trenches must contain an overflow structure
- Trenches must be equipped with an observation well, with a secure locking well cap, to measure the drawdown time following a storm and to monitor sedimentation to determine maintenance needs. The observation well may be a 4" diameter perforated pipe that extends to the bottom of the trench, located at a point approximately halfway along the trench length
- Plantings shall be designed to provide full cover within one year.

Sizing

For small projects, the sizing table below may be used to determine the required square footage of the bioengineered planting strip trench. For large projects, facilities must be designed according to the Planter Sizing Method and approved by a licensed civil engineer. For projects required to detain the 100-year, 24-hour design storm, additional flow control facilities may be required.

Table 10. Size Requirements for Bioengineered Planting Strips

	Square footage of impervious surface draining to facility						
	2000	2500	3000	3500	4000	4500	5000
Required trench area (sf)	165	205	246	287	328	369	410

3.10 Infiltration Facility: Infiltration Trench

Figure 4. Infiltration Trench

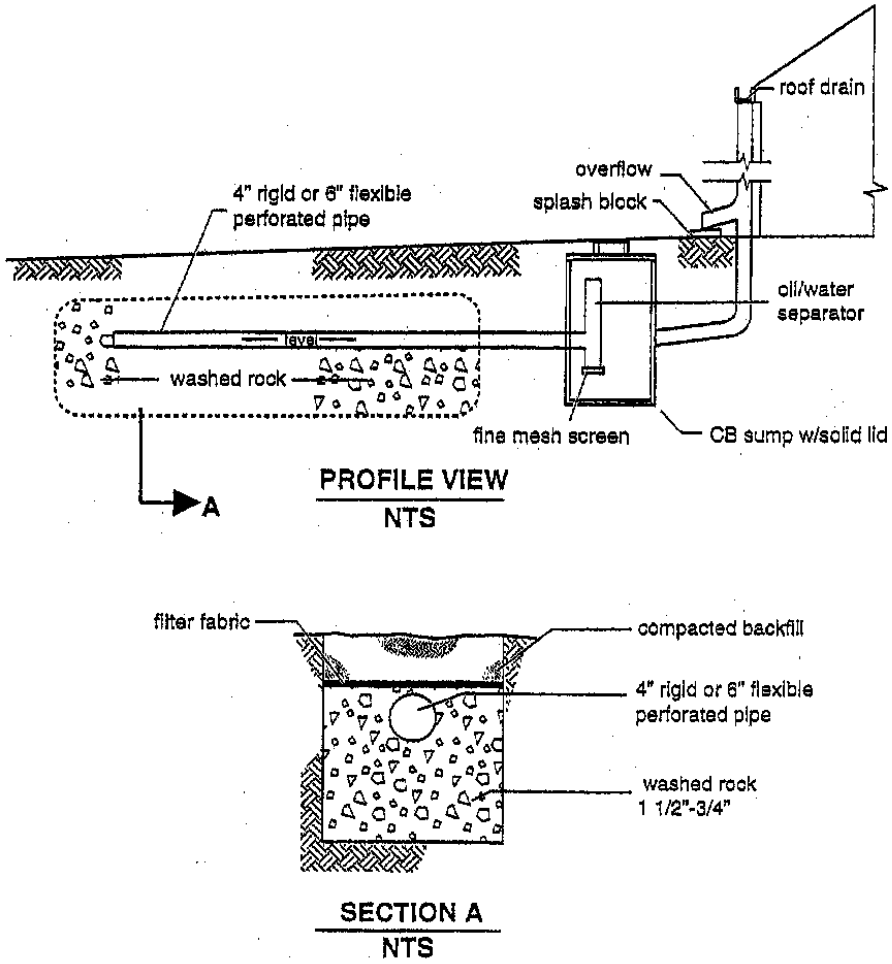

Description

An ***infiltration trench*** is a shallow, excavated trench that has been backfilled with coarse stone aggregate to create an underground reservoir. See **Figure 4.** Stormwater runoff diverted into the trench gradually exfiltrates from the bottom of the trench into the subsoil and eventually into the water table. Infiltration trenches are a good option with sandy soils where the depth to the maximum wet-season water table or hardpan is between 3 and 6 feet.

Sizing

Infiltration facilities shall be sized according to Darcy's Law of Groundwater Movement, to infiltrate a 25-year, 24-hour design storm within 48 hours. For projects required to detain the 100-year storm, additional flow control facilities may be required. For small projects, Table 8 may be used to determine the minimum trench length for every 1000 square feet of impervious surface.

Table 11. Size Requirements for Infiltration Trench

Minimum Length (ft) per 1000 Square Feet of Impervious Surface

Soil Infiltration Rate	(2.40 in/hr)*	(4 in/hr)	(8.27 in/hr)
Correction factor of 1.2	2.00 in/hr	3.33 in/hr	6.89 in/hr
2 ft deep x 2 ft wide	90	60	30
3 ft deep x 3 ft wide	60	40	20
4 ft deep x 4 ft wide	50	30	20

*geotechnical analysis recommended

Design Requirements

Infiltration trenches must be designed according to the following criteria:

- Trenches must contain an overflow structure
- Trenches designed to receive concentrated flows must use a conveyance pipe of ASTM 3034 SDR 35 or equivalent, and include a Type 241 catch basin with trap or sump and a central trench pipe (4" to 8" perforated pipe)
- For trenches designed to receive sheet flow, the site must be graded so that runoff is directed in sheet flow across a minimum 10 foot grass buffer strip to remove larger sediment particles.
- Trenches shall run parallel to site contour lines.
- Sides of adjacent trenches shall be a minimum of five (5) feet apart.
- The bottom of the trench must be level.
- The trench must have a minimum of one (1) foot of cover.
- The minimum width and depth of an infiltration trench shall be two feet (2) and the maximum width and depth shall be four (4) feet.
- Geotextile fabric, according to the specifications below, shall be placed around the walls and bottom of the trench. A six (6) inch layer of sand may also be used as a filter media at the bottom of the trench.

Grab tensile strength (lbs.)	75 (min)	ASTM D4632
Burst strength (psi)	130 (min)	ASTM D3786
Puncture resistance (lbs)	80 (min)	ASTM D4833
Permeability (cm/sec) Permittivity (sec^{-1})	0.2 (min)	ASTM D4491
AOS (sieve size)	#60 - #70	ASTM D4751
Ultraviolet resistance	70% (min)	ASTM D4355

- Trenches shall be filled with uniformly graded washed gravel with nominal size from 3/4" to 1 1/2" diameter.
- Trenches shall have perforated pipe in the center of the cross section. The pipe shall be between four (4) inches and eight (8) inches in diameter. The pipe shall be:
  - PVC ASTM 3034 SDR 35, meeting the requirements of AASHTO M 278, or

- perforated corrugated polyethylene underdrain pipe, Type S, meeting the requirements of AASHTO M 294, or equivalent.

- Trenches must be equipped with an observation well, with a secure locking well cap, to measure the drawdown time following a storm and to monitor sedimentation to determine maintenance needs. For projects with more than 5,000 square feet of impervious surface, each trench shall have one observation well (4" diameter perforated pipe with a secure locking well cap) that extends to the bottom of the trench, located at a point approximately halfway along the trench length.

3.11 Infiltration Facility: Dry Well

Figure 5. Dry Well

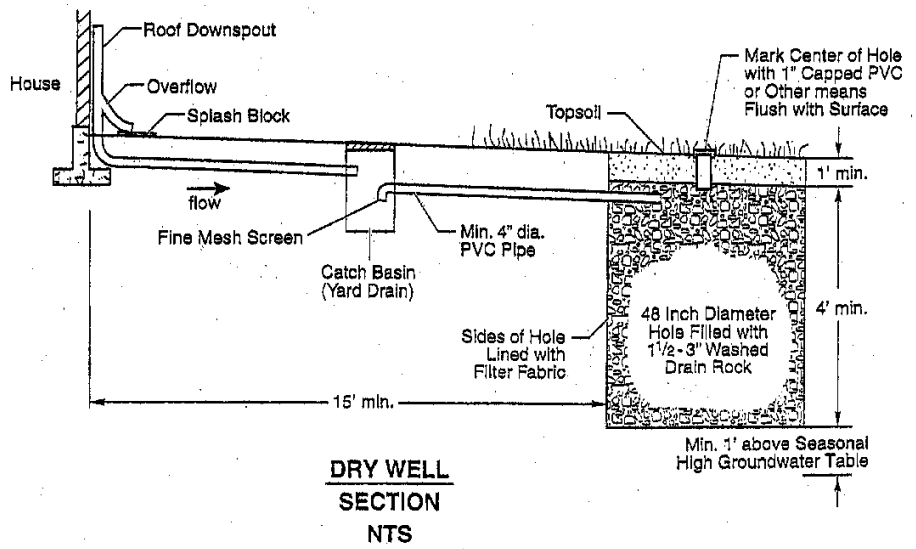

Description

Dry wells are designed to be deep and therefore are generally more compact than infiltration trenches, but are appropriate only where the depth to maximum wet-season water table is 6 feet or greater. **Figure 5** illustrates the requirements for infiltration dry wells as outlined below:

Sizing

For small projects meeting the minimum infiltration rate, each dry well may serve up to 1000 square feet of impervious surface. For each 1000 square footage drainage area, the dry well should be 48 inches in diameter (minimum) and have a depth of 5 feet (4 feet of gravel and 1 foot of suitable cover material). See the detail in **Figure 5**. For large projects, dry wells shall be sized according to Darcy's Law of Groundwater Movement to infiltrate the 25-year, 24-hour storm within 48 hours. For projects required to detain the 100-year design storm, additional flow control facilities may be required.

Design Requirements

- Dry wells designed to receive concentrated flows must use a conveyance pipe of ASTM 3034 SDR 35 or equivalent, and include a Type 241 catch basin with trap or sump and a central trench pipe (4" to 8" perforated pipe)
- Dry well bottoms must be a minimum of 1 foot above seasonal high groundwater level or impermeable soil layers.
- Filter fabric (geotextile) shall be placed on top of the drain rock and on dry well sides prior to backfilling.
- Spacing between dry wells should be a minimum of 4 feet.
- Dry wells must be equipped with an observation well, with a secure locking oil cap, to measure the drawdown time following a storm and to monitor sedimentation to determine maintenance needs.
- A minimum 5-foot setback shall be maintained between any part of a dry well and any structure or property line.

3.12 Infiltration Facility: Infiltration Planter

Figure 6. Infiltration Planter

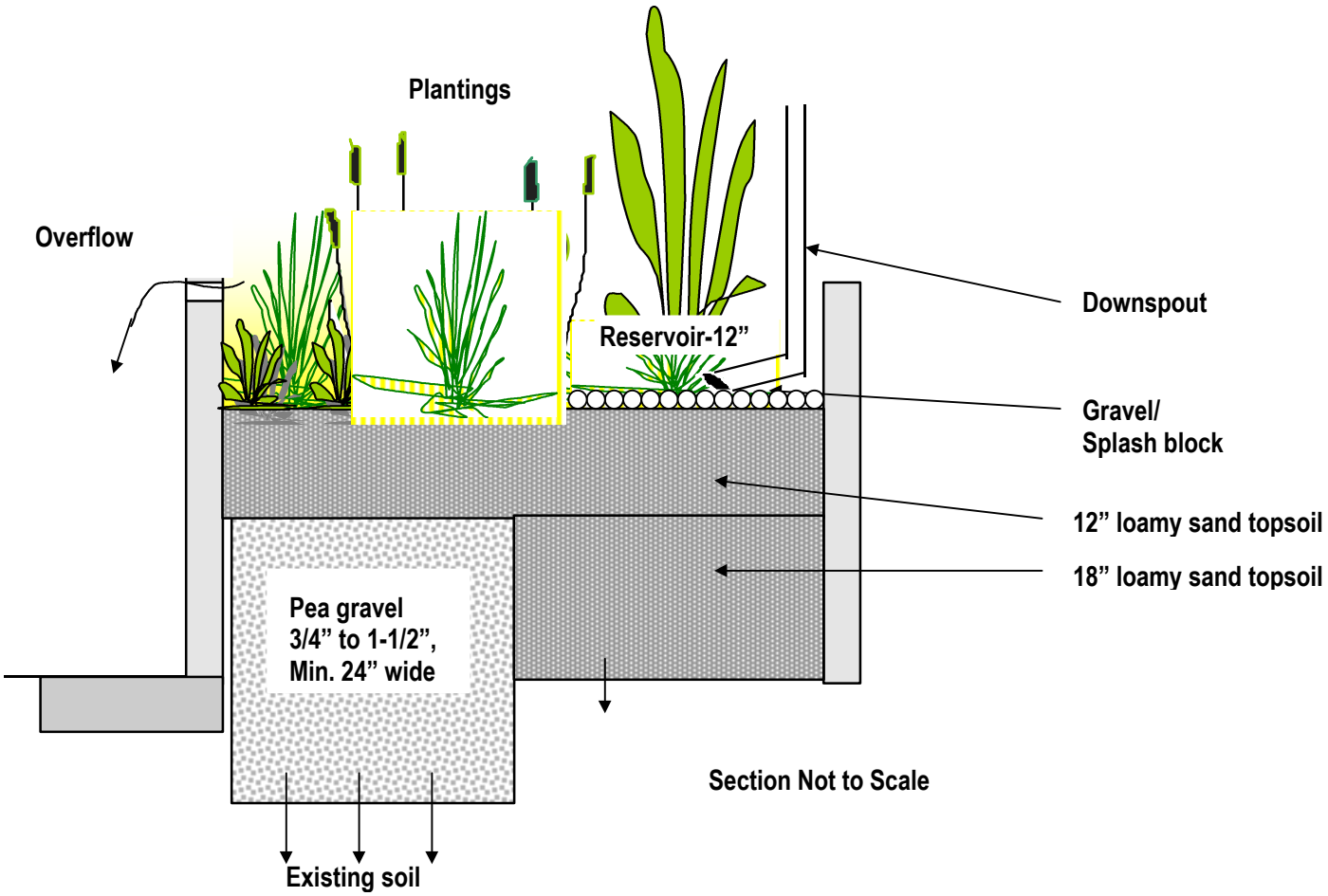

Description

The Infiltration Planter is designed to temporarily store runoff in a reservoir, filter stormwater through the planter soils and vegetation, and then infiltrate into the native soil. Planters may be in-ground or above grade.

Technical Requirements

Minimum planter width is 36 inches. The planter shall include a 24-inch wide, 48-inch deep trench filled with uniformly graded washed gravel with nominal size from 3/4" to 1½", covered with 12" of loamy sand topsoil. The remainder of the planter should be backfilled with loamy sand with a minimum infiltration rate of 2 inches per hour, leaving a 12" reservoir or surface storage. (See **Figure 6**). Plantings shall be appropriate for moist and seasonally dry conditions, and can include rushes, reeds, sedges, iris, dogwood, currants, and numerous other shrubs, trees, and herbs/grasses.

Sizing

For small projects, infiltration planters may be sized according to the table below. For large projects, facilities must be designed according to the Planter Sizing Method and approved by a licensed civil engineer. For projects required to detain the 100-year, 24-hour design storm, additional flow control facilities may be required.

Table 12. Size Requirements for Infiltration Planter

	Square footage of impervious surface draining to facility						
	2000	2500	3000	3500	4000	4500	5000
Required planter area (sf)	100	125	150	175	200	225	250

Additional References

City of Portland, Oregon, Bureau of Environmental Services, “Stormwater Management Manual.” Adopted July 1, 1999.

City of Seattle Board of Public Works Rules Chapter 4.40, "Street and Sidewalk Pavement Opening and Restoration.”

City of Seattle Construction Stormwater Control Manual

City of Seattle Source Control Technical Requirements Manual

City of Seattle Standard Plans for Municipal Public Works Construction, 2000

City of Seattle Standard Specifications for Road, Bridge and Municipal Construction, 2000

City of Seattle Stormwater Treatment Technical Requirements Manual

City of Seattle Street and Sidewalk Opening and Restoration Rules, SEATRAN Director’s Rule 94-8.

City of Seattle Traffic Control Manual for In-Street Work

King County, Washington Department of Natural Resources, “Surface Water Design Manual.” September 1998.

Washington State Department of Ecology, “Stormwater Management Manual for the Puget Sound Basin (The Technical Manual).” February 1992.

“Side Sewers,” Chapter 21.16 of the Seattle Municipal Code.

“Regulations for Environmental Critical Areas,” Chapter 25.09, Seattle Municipal Code

Appendix A: City of Seattle Hyetograph

CITY OF SEATTLE 24-HOUR DESIGN STORM HYETOGRAPH VALUES

Time from Beginning of Storm (Minutes)	Percent Rainfall	2 Year Storm Rainfall in Inches	25 Year Storm Rainfall in Inches	100 Year Storm Rainfall in Inches	Cumulative Percent Rainfall
0 - 10	0.40	0.0067	0.0125	0.0154	0.40
10 - 20	0.40	0.0067	0.0125	0.0154	0.80
20 - 30	0.40	0.0067	0.0125	0.0154	1.20
30 - 40	0.40	0.0067	0.0125	0.0154	1.60
40 - 50	0.40	0.0067	0.0125	0.0154	2.00
50 - 60	0.40	0.0067	0.0125	0.0154	2.40
60 - 70	0.40	0.0067	0.0125	0.0154	2.80
70 - 80	0.40	0.0067	0.0125	0.0154	3.20
80 - 90	0.40	0.0067	0.0125	0.0154	3.60
90 - 100	0.40	0.0067	0.0125	0.0154	4.00
100 - 110	0.50	0.0084	0.0156	0.0192	4.50
110 - 120	0.50	0.0084	0.0156	0.0192	5.00
120 - 130	0.50	0.0084	0.0156	0.0192	5.50
130 - 140	0.50	0.0084	0.0156	0.0192	6.00
140 - 150	0.50	0.0084	0.0156	0.0192	6.50
150 - 160	0.50	0.0084	0.0156	0.0192	7.00
160 - 170	0.60	0.0101	0.0188	0.0230	7.60
170 - 180	0.60	0.0101	0.0188	0.0230	8.20
180 - 190	0.60	0.0101	0.0188	0.0230	8.80
190 - 200	0.60	0.0101	0.0188	0.0230	9.40
200 - 210	0.60	0.0101	0.0188	0.0230	10.00
210 - 220	0.60	0.0101	0.0188	0.0230	10.60
220 - 230	0.70	0.0118	0.0219	0.0269	11.30
230 - 240	0.70	0.0118	0.0219	0.0269	12.00
240 - 250	0.70	0.0118	0.0219	0.0269	12.70
250 - 260	0.70	0.0118	0.0219	0.0269	13.40
260 - 270	0.70	0.0118	0.0219	0.0269	14.10
270 - 280	0.70	0.0118	0.0219	0.0269	14.80
280 - 290	0.82	0.0138	0.0256	0.0315	15.62
290 - 300	0.82	0.0138	0.0256	0.0315	16.44
300 - 310	0.82	0.0138	0.0256	0.0315	17.26
310 - 320	0.82	0.0138	0.0256	0.0315	18.08
320 - 330	0.82	0.0138	0.0256	0.0315	18.90
330 - 340	0.82	0.0138	0.0256	0.0315	19.72
340 - 350	0.95	0.0160	0.0297	0.0365	20.67
350 - 360	0.95	0.0160	0.0297	0.0365	21.62
360 - 370	0.95	0.0160	0.0297	0.0365	22.57
370 - 380	0.95	0.0160	0.0297	0.0365	23.52
380 - 390	0.95	0.0160	0.0297	0.0365	24.47
390 - 400	0.95	0.0160	0.0297	0.0365	25.42
400 - 410	1.33	0.0223	0.0416	0.0511	26.75
410 - 420	1.33	0.0223	0.0416	0.0511	28.08
420 - 430	1.33	0.0223	0.0416	0.0511	29.41
430 - 440	1.80	0.0302	0.0563	0.0691	31.21
440 - 450	1.80	0.0302	0.0563	0.0691	33.01
450 - 460	4.16	0.0699	0.1300	0.1597	37.17

Time from Beginning of Storm (Minutes)	Percent Rainfall	2 Year Storm Rainfall in Inches	25 Year Storm Rainfall in Inches	100 Year Storm Rainfall in Inches	Cumulative Percent Rainfall
460 - 470	9.92	0.1667	0.3100	0.3809	47.09
470 - 480	2.70	0.0454	0.0844	0.1037	49.79
480 - 490	1.80	0.0302	0.0563	0.0691	51.59
490 - 500	1.34	0.0225	0.0419	0.0515	52.93
500 - 510	1.34	0.0225	0.0419	0.0515	54.27
510 - 520	1.34	0.0225	0.0419	0.0515	55.61
520 - 530	0.88	0.0148	0.0275	0.0338	56.49
530 - 540	0.88	0.0148	0.0275	0.0338	57.37
540 - 550	0.88	0.0148	0.0275	0.0338	58.25
550 - 560	0.88	0.0148	0.0275	0.0338	59.13
560 - 570	0.88	0.0148	0.0275	0.0338	60.01
570 - 580	0.88	0.0148	0.0275	0.0338	60.89
580 - 590	0.88	0.0148	0.0275	0.0338	61.77
590 - 600	0.88	0.0148	0.0275	0.0338	62.65
600 - 610	0.88	0.0148	0.0275	0.0338	63.53
610 - 620	0.88	0.0148	0.0275	0.0338	64.41
620 - 630	0.88	0.0148	0.0275	0.0338	65.29
630 - 640	0.88	0.0148	0.0275	0.0338	66.17
640 - 650	0.72	0.0121	0.0225	0.0276	66.89
650 - 660	0.72	0.0121	0.0225	0.0276	67.61
660 - 670	0.72	0.0121	0.0225	0.0276	68.33
670 - 680	0.72	0.0121	0.0225	0.0276	69.05
680 - 690	0.72	0.0121	0.0225	0.0276	69.77
690 - 700	0.72	0.0121	0.0225	0.0276	70.49
700 - 710	0.72	0.0121	0.0225	0.0276	71.21
710 - 720	0.72	0.0121	0.0225	0.0276	71.93
720 - 730	0.72	0.0121	0.0225	0.0276	72.65
730 - 740	0.72	0.0121	0.0225	0.0276	73.37
740 - 750	0.72	0.0121	0.0225	0.0276	74.09
750 - 760	0.72	0.0121	0.0225	0.0276	74.81
760 - 770	0.57	0.0096	0.0178	0.0219	75.38
770 - 780	0.57	0.0096	0.0178	0.0219	75.95
780 - 790	0.57	0.0096	0.0178	0.0219	76.52
790 - 800	0.57	0.0096	0.0178	0.0219	77.09
800 - 810	0.57	0.0096	0.0178	0.0219	77.66
810 - 820	0.57	0.0096	0.0178	0.0219	78.23
820 - 830	0.57	0.0096	0.0178	0.0219	78.80
830 - 840	0.57	0.0096	0.0178	0.0219	79.37
840 - 850	0.57	0.0096	0.0178	0.0219	79.94
850 - 860	0.57	0.0096	0.0178	0.0219	80.51
760 - 770	0.57	0.0096	0.0178	0.0219	81.08
770 - 780	0.57	0.0096	0.0178	0.0219	81.65
880 - 890	0.50	0.0084	0.0156	0.0192	82.15
890 - 900	0.50	0.0084	0.0156	0.0192	82.65
900 - 910	0.50	0.0084	0.0156	0.0192	83.15
910 - 920	0.50	0.0084	0.0156	0.0192	83.65
920 - 930	0.50	0.0084	0.0156	0.0192	84.15
930 - 940	0.50	0.0084	0.0156	0.0192	84.65
940 - 950	0.50	0.0084	0.0156	0.0192	85.15
950 - 960	0.50	0.0084	0.0156	0.0192	85.65

Time from Beginning of Storm (Minutes)	Percent Rainfall	2 Year Storm Rainfall in Inches	25 Year Storm Rainfall in Inches	100 Year Storm Rainfall in Inches	Cumulative Percent Rainfall
960 - 970	0.50	0.0084	0.0156	0.0192	86.15
970 - 980	0.50	0.0084	0.0156	0.0192	86.65
980 - 990	0.50	0.0084	0.0156	0.0192	87.15
990 - 1000	0.50	0.0084	0.0156	0.0192	87.65
1000 - 1010	0.40	0.0067	0.0125	0.0154	88.05
1010 - 1020	0.40	0.0067	0.0125	0.0154	88.45
1020 - 1030	0.40	0.0067	0.0125	0.0154	88.85
1030 - 1040	0.40	0.0067	0.0125	0.0154	89.25
1040 - 1050	0.40	0.0067	0.0125	0.0154	89.65
1050 - 1060	0.40	0.0067	0.0125	0.0154	90.05
1060 - 1070	0.40	0.0067	0.0125	0.0154	90.45
1070 - 1080	0.40	0.0067	0.0125	0.0154	90.85
1080 - 1090	0.40	0.0067	0.0125	0.0154	91.25
1090 - 1100	0.40	0.0067	0.0125	0.0154	91.65
1100 - 1110	0.40	0.0067	0.0125	0.0154	92.05
1110 - 1120	0.40	0.0067	0.0125	0.0154	92.45
1120 - 1130	0.40	0.0067	0.0125	0.0154	92.85
1130 - 1140	0.40	0.0067	0.0125	0.0154	93.25
1140 - 1150	0.40	0.0067	0.0125	0.0154	93.65
1150 - 1160	0.40	0.0067	0.0125	0.0154	94.05
1160 - 1170	0.40	0.0067	0.0125	0.0154	94.45
1170 - 1180	0.40	0.0067	0.0125	0.0154	94.85
1180 - 1190	0.40	0.0067	0.0125	0.0154	95.25
1190 - 1200	0.40	0.0067	0.0125	0.0154	95.65
1200 - 1210	0.32	0.0054	0.0100	0.0123	95.97
1210 - 1220	0.32	0.0054	0.0100	0.0123	96.29
1220 - 1230	0.32	0.0054	0.0100	0.0123	96.61
1230 - 1240	0.32	0.0054	0.0100	0.0123	96.93
1240 - 1250	0.32	0.0054	0.0100	0.0123	97.25
1250 - 1260	0.32	0.0054	0.0100	0.0123	97.57
1260 - 1270	0.32	0.0054	0.0100	0.0123	97.89
1270 - 1280	0.32	0.0054	0.0100	0.0123	98.21
1280 - 1290	0.16	0.0027	0.0050	0.0061	98.37
1290 - 1300	0.16	0.0027	0.0050	0.0061	98.53
1300 - 1310	0.16	0.0027	0.0050	0.0061	98.69
1310 - 1320	0.16	0.0027	0.0050	0.0061	98.85
1320 - 1330	0.16	0.0027	0.0050	0.0061	99.01
1330 - 1340	0.16	0.0027	0.0050	0.0061	99.17
1340 - 1350	0.16	0.0027	0.0050	0.0061	99.33
1350 - 1360	0.16	0.0027	0.0050	0.0061	99.49
1360 - 1370	0.16	0.0027	0.0050	0.0061	99.65
1370 - 1380	0.16	0.0027	0.0050	0.0061	99.81
1380 - 1390	0.03	0.0005	0.0010	0.0012	99.84
1390 - 1400	0.03	0.0005	0.0010	0.0012	99.87
1400 - 1410	0.03	0.0005	0.0010	0.0012	99.90
1410 - 1420	0.03	0.0005	0.0010	0.0012	99.94
1420 - 1430	0.03	0.0005	0.0010	0.0012	99.97
1430 - 1440	0.03	0.0005	0.0010	0.0012	100.00
Total Rainfall	100%	1.68”	3.125”	3.84”	

Appendix B: Impervious Surface Reduction Credit

Porous Pavement

Figure 7. Porous Pavement Specifications

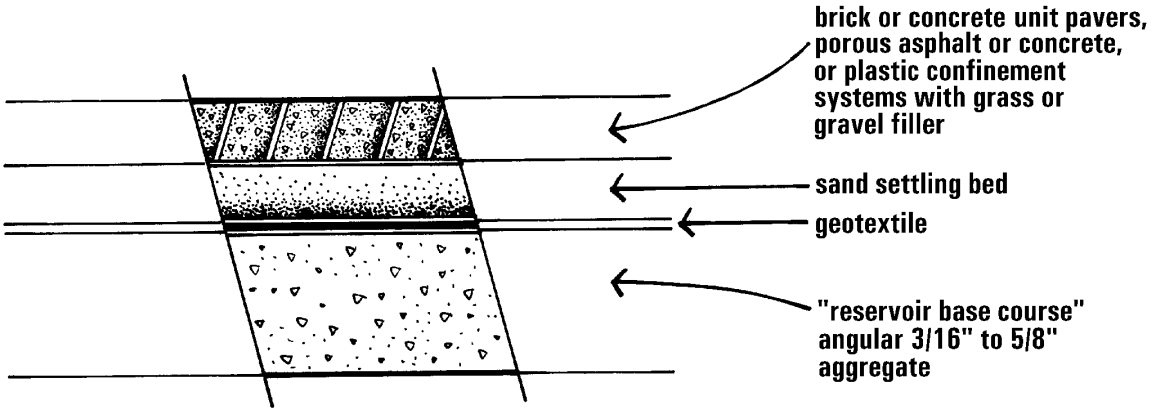

Description

Porous or permeable pavements allow for the infiltration of stormwater while simultaneously providing a stable load-bearing surface suitable for walking and driving. They contain sufficient void space to infiltrate runoff into the underlying reservoir base course and soil. Pavements include brick or concrete, unit pavers, porous asphalt or concrete, and plastic confinement systems with grass or gravel filler.

Technical Requirements

Impervious surface reduction credit will be applied to the area of porous pavement designed according to these specifications. Credit is applied by modifying the curve number of the porous pavement based on the Soil Conservation Service (SCS) hydrologic soil group classification of the native soil as described in **Table 13.**

Table 13. Porous Pavement Impervious Surface Reduction Credit[8]

	SCS Hydrologic Soil Group			
	A	B	C	D
Curve Number	76	85	89	91

All porous pavements have a reservoir base course in common. The base course shall be an aggregate engineered fill or an aggregate/soil engineered fill for turf products. The base course must meet these requirements:

[8] Curve numbers are based on the gravel road land use description in the SCS Table for Western Washington Runoff Curve Numbers, 1982. A lower curve number may be used if the applicant demonstrates that the porous pavement will retain more runoff.

- The aggregate engineered fill should be angular with a predominant particle range from 3/16 inch to 5/8 inch and should contain less than 3 – 5 % passing the #200 sieve. The aggregate shall have a known void space when compacted. A rock filter or geotextile fabric shall be used to eliminate fine soil movement between the subbase and the subsoil.
- The underlying soil shall have a minimum percolation rate of .5 inch/hour. Prior to placement of the placement of the porous pavement, the subgrade shall be tested for rate of permeability by double ring infiltrometer, or other suitable test of subgrade permeability. The tested permeability must reasonably compare to the design permeability.
- The bottom of the subgrade shall be placed above the high water table.
- Topsoil for turf applications shall contain sufficient organic materials to support organic growth. Topsoil such as sandy loam is recommended. Topsoil shall be pulverized prior to application.
- The pavements shall have adequate drainage capability through the system so that the presence of water within the subbase does not remain 24 hours after a storm.

The material must be installed and maintained according to the manufacturer's specifications. If placing pervious concrete or porous asphalt, the contractor shall be experienced in the placement of the products and shall place, joint and cure test panels, each to be a minimum of 225 sq. ft to demonstrate that in-place-weights and the required 15%-21% void structure can be attained.

Eco-Roofs

Figure 8. Eco-Roof Specifications

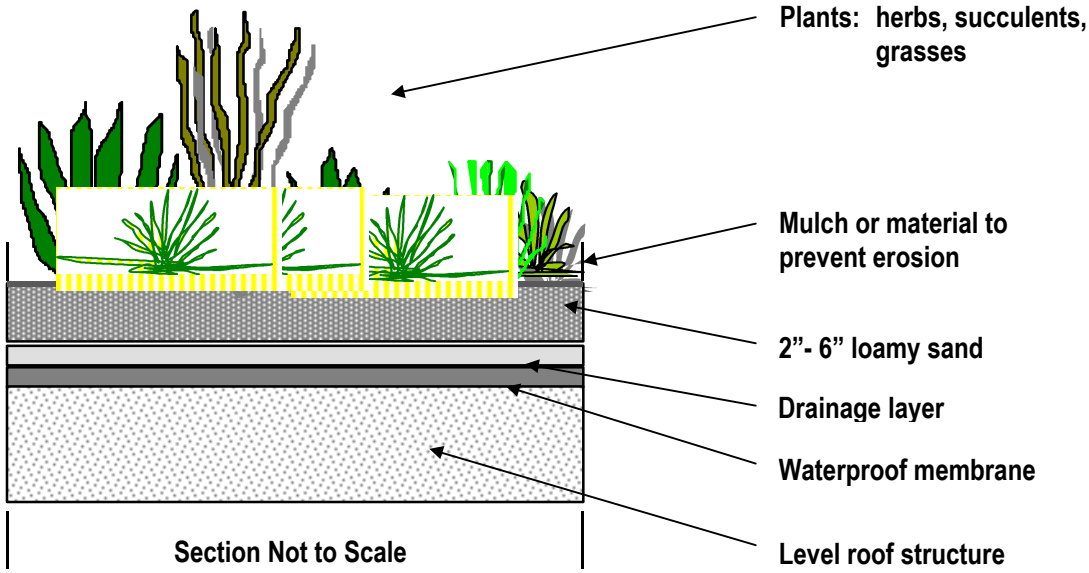

Description

An eco-roof is a lightweight roof system of waterproofing material with a thin soil/vegetation protective cover. The eco-roof can be used in place of a traditional roof, and is suitable for construction on most existing, conventionally constructed buildings. Control of stormwater runoff is achieved by mimicking the processes that occur in nature, intercepting and delaying rainfall runoff by: capturing and holding precipitation in the plant foliage; absorbing water in the root zone; and slowing the velocity of direct runoff as it infiltrates through the layers of vegetated cover.

Vegetated roof covers incorporate internal drainage networks that convey water away from the roof deck. Consequently, water drains quickly from the roof, and pools of water will not develop.

Technical Requirements

Impervious surface reduction credit will vary for Eco-roofs according to the soil depth, slope of roof, and discharge rate restriction of the conveyance system. Applicant must model the storage capacity and discharge rate of the eco-roof using the methods described in Chapter 1 and, if necessary, include a flow control structure in the design to meet the discharge rate requirements. Additional drainage control facilities will likely be required to meet the flow control requirements.

Soil shall be of adequate fertility and drainage capacity at depths of 2-6 inches. Plants shall be self-sustaining, without the need for fertilizers or pesticides. Soil coverage to prevent erosion shall be established immediately upon installation. Ninety-percent plant coverage shall be achieved within 2 years. Roofs with slopes greater than 8 degrees may be installed but require installation of landscape retainers at the roof membrane elevation (follow manufacturer's installation procedures). Temporary irrigation to establish plants is recommended. A permanent irrigation system using potable water may be used, but the water application shall not exceed 0.2 inches every 14 days for the June-September season.

Roof Gardens

Figure 9. Roof Garden Specifications

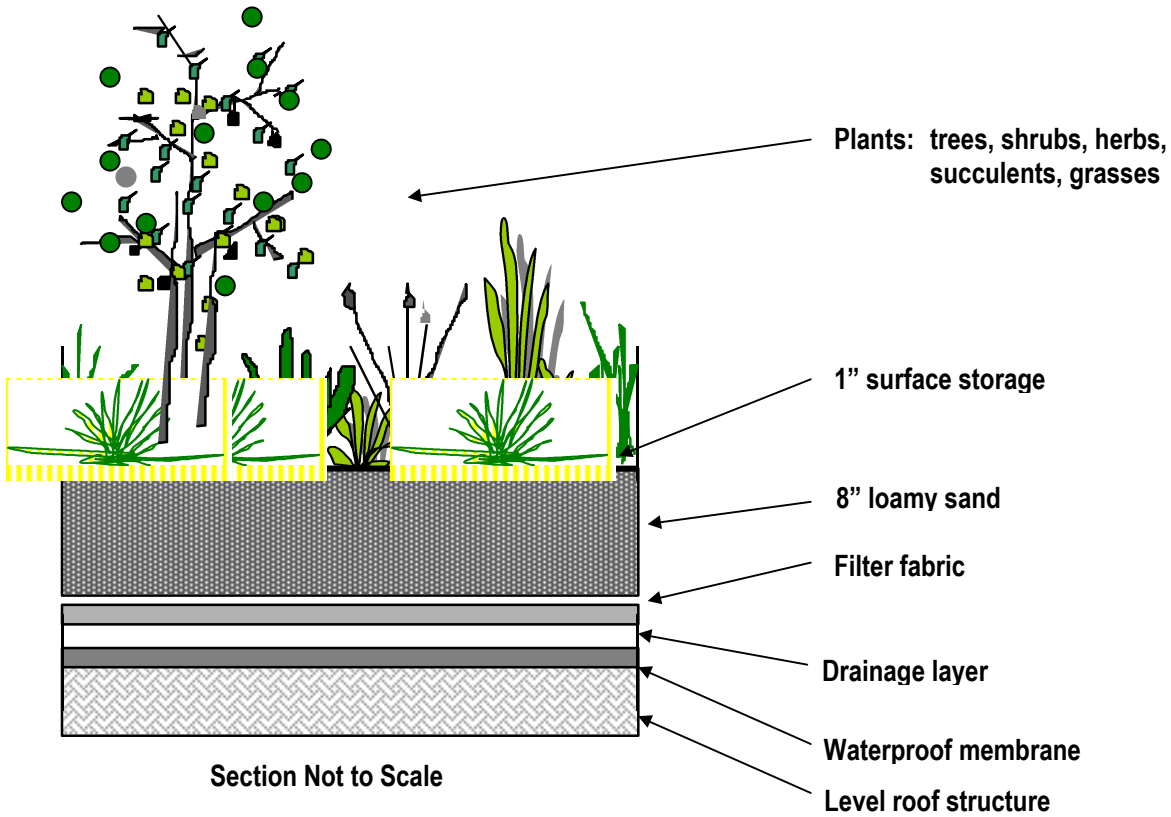

Description

Roof gardens typically cover a portion or potentially all of the roof. They typically have a greater depth of soil and are therefore heavier than an eco-roof. Roof gardens can be placed on an existing roof, or constructed in place of a traditional roof. They may exist as built-up planting areas where vegetables or flowers may be grown or harvested, or they may cover a rooftop with limited access. Impervious area reduction credit is only for the roof garden area with soil and plantings; no credit is given for paved terraces.

Technical Requirements

Impervious surface reduction credit is applied to roof gardens as a one-to-one credit. Roof Gardens must include a minimum 8" of soil and a 1" surface storage area to qualify for the credit. Applicant must model the discharge rate of the roof garden using the methods described in Chapter 1 and, if necessary, include a flow control structure in the design to meet the discharge rate requirements.

Consult with a design engineer prior to construction of a rooftop garden to insure that the roof can carry the additional load. A minimum 8-inch depth of loamy sand is required. Plants shall be relatively self-sustaining, with little need for chemical fertilizers or pesticides. An irrigation system using potable water is allowed, but conservation is strongly encouraged. Projects are encouraged to use alternative sources of irrigation, such as cooling tower condensate or other non-potable sources. Alternative sources should be analyzed to determine if the source has chemicals that might harm or kill the vegetation and soil organisms.

Landscape Planters

Figure 10. Landscape Planter Specifications

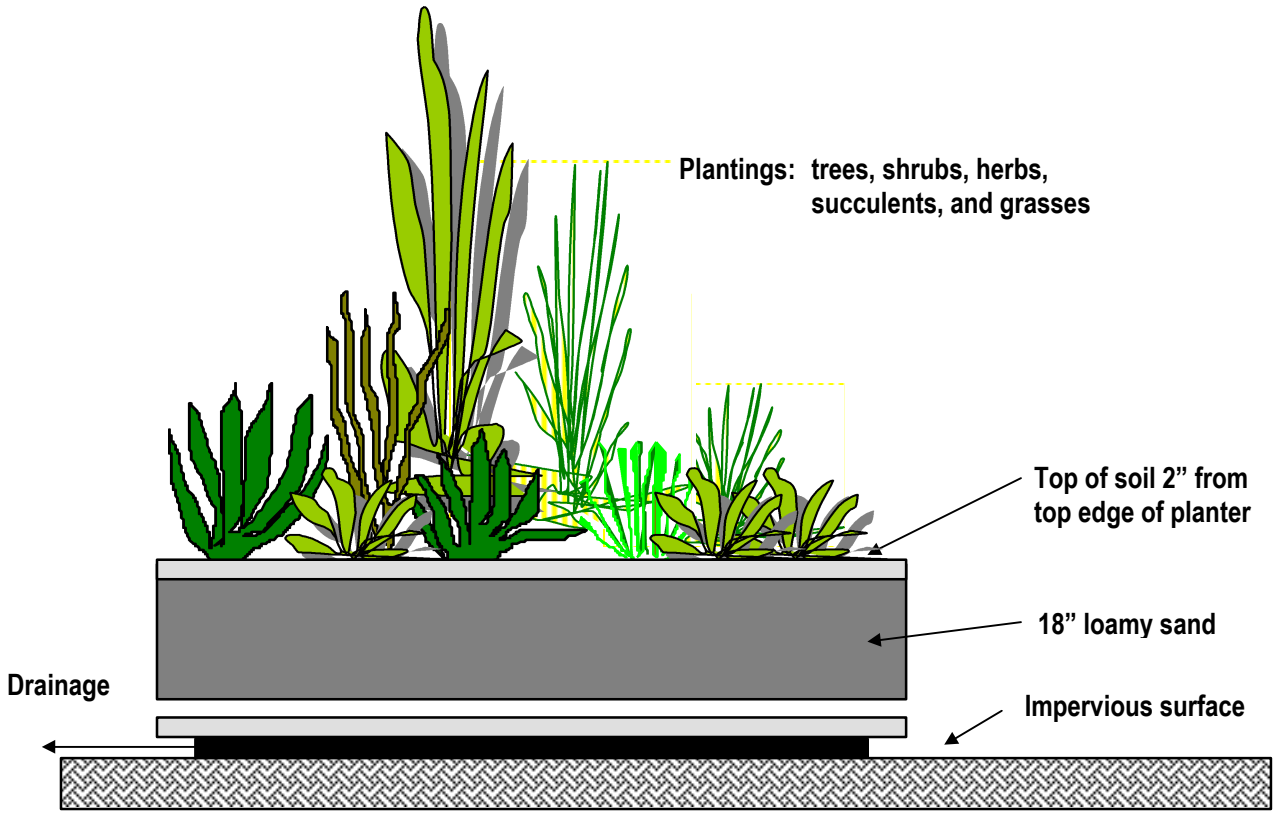

Section Not to Scale

Description

Landscape planters are used for planting trees, shrubs, and ground cover. The planter may be a prefabricated pot of various dimensions or may be constructed in place and have an infinite variety of shapes and sizes. Planters accept precipitation only, not stormwater runoff. Planters are placed on impervious surfaces, such as sidewalks, plazas and rooftops. Drainage is allowed through the bottom of the planter onto the impervious surface.

Technical Requirements

Impervious surface reduction credit is applied to landscape planters as a one-to-one credit. Landscape planters must include a minimum 18" of loamy sand and a 2" surface storage area to qualify for the credit. In addition, the size of the drain holes for the planters shall be less than 10% of the total planter area.

Plants shall be relatively self-sustaining, with little need for fertilizers or pesticides. Plant viability shall be maintained through appropriate irrigation. The structural elements of the planters shall be stone, concrete, brick, wood, or other durable material. Treated wood shall not leach out any toxic chemicals.

Appendix C: Detention System Figures

Figure 11. Layout of a Detention System

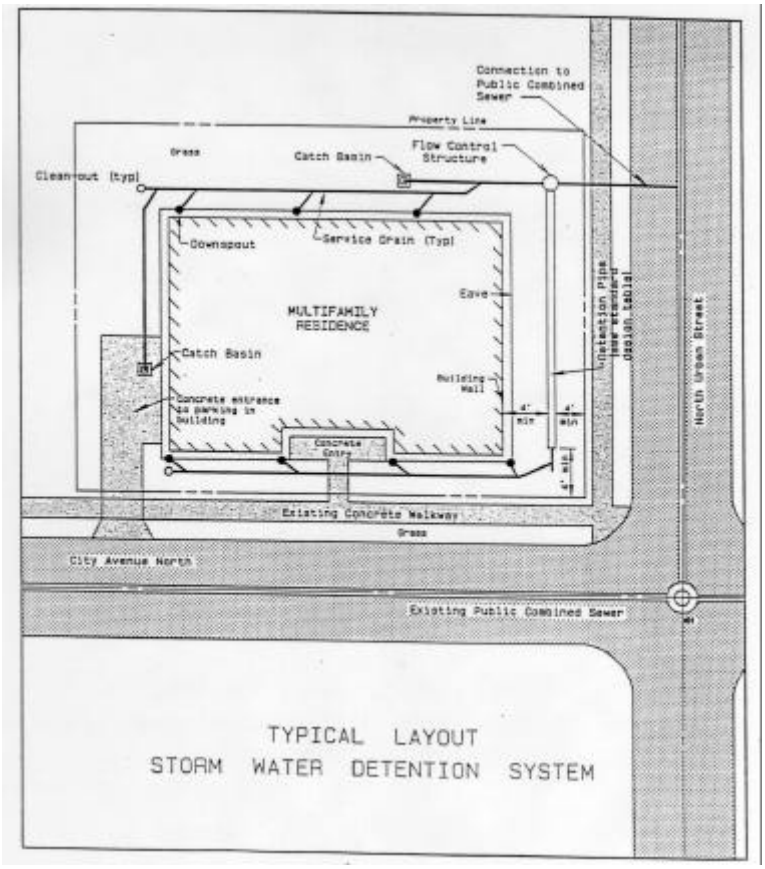

Figure 12. Detention System Profile

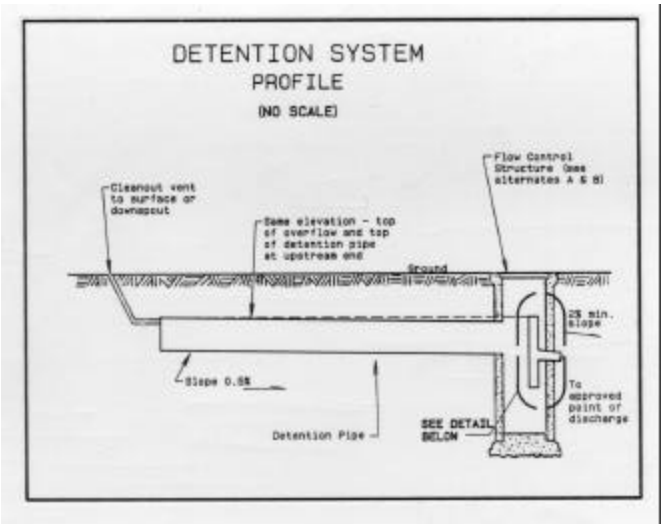

Figure 13. Flow Control Structure (SP 272)

STANDARD PLAN NO 272

REV DATE: 1991

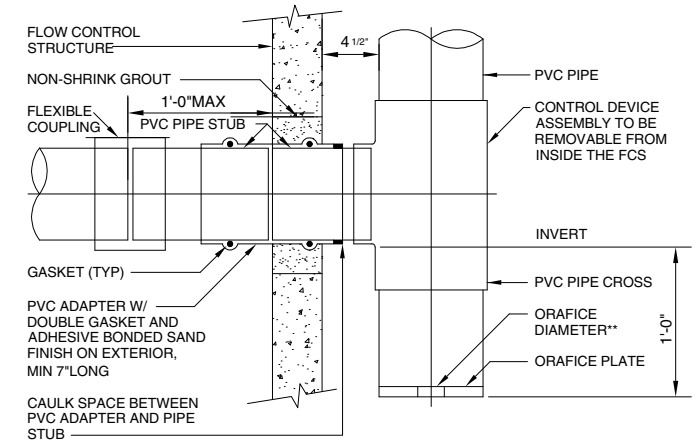

CONNECTION & CONTROL DEVICE DETAIL A

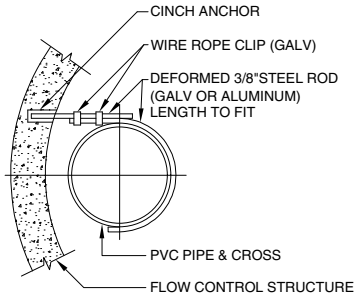

PIPE SUPPORT DETAIL B

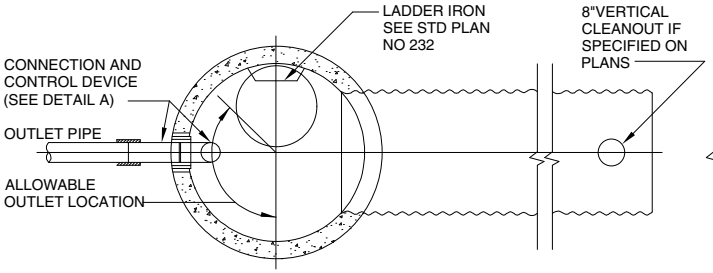

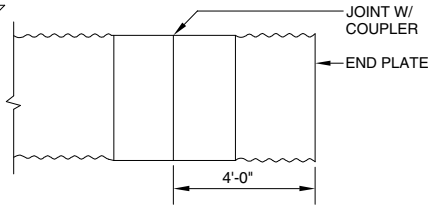

END CAP DETAIL
(WHEN REQUIRED)

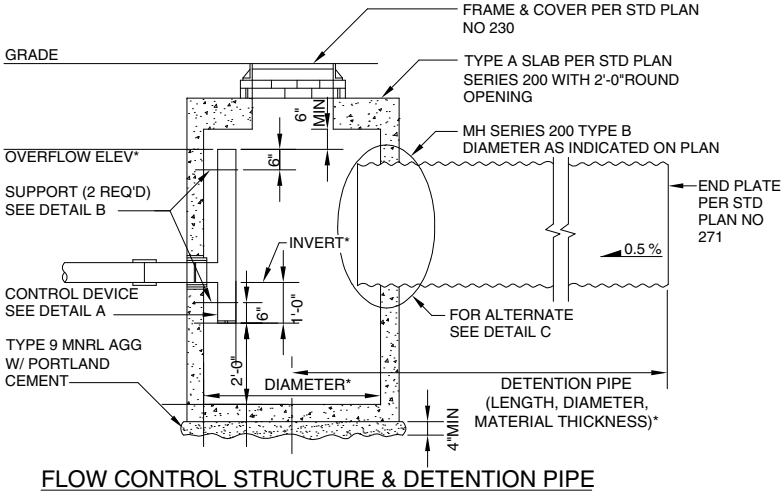

FLOW CONTROL STRUCTURE & DETENTION PIPE
*SPECIFIC DESIGN INFORMATION AS INDICATED ON CONSTRUCTION DRAWINGS

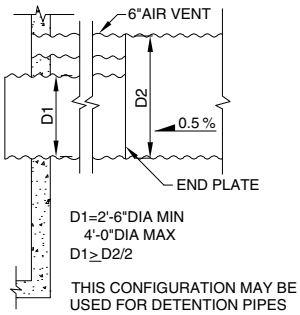

D1=2'-6"DIA MIN
4'-0"DIA MAX
D1≥D2/2

THIS CONFIGURATION MAY BE USED FOR DETENTION PIPES LARGER THAN 3'-0"DIA. USE CONFIGURATION SHOWN ON CONSTRUCTION DRAWING PROFILE

DETAIL C

NOT TO SCALE

	CITY OF SEATTLE PUBLIC UTILITIES DEPARTMENT	FLOW CONTROL STRUCTURE

Figure 14. Flow Control Design Options

INLET CONNECTION TO FLOW CONTROL STRUCTURE:

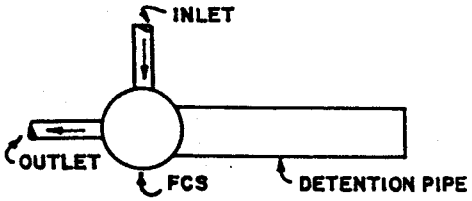

METHOD I
PLAN VIEW

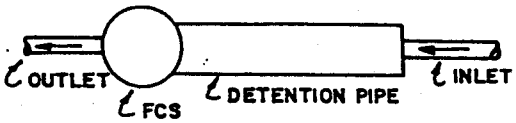

METHOD 2
PLAN VIEW

DETENTION CONNECTION TO FLOW CONTROL STRUCTURE:

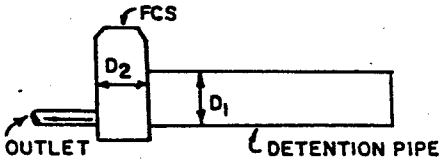

METHOD A
CROSS SECTION

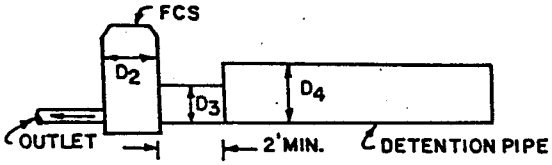

METHOD B
CROSS SECTION

D_2	MAX D_1, D_3	
	CMP	CONCRETE PIPE
48"	30"	24"
54"	36"	30"
60"	48"	36"
72"	60"	48"

$$D_3 \geq \frac{D_4}{2}$$

AND D_3= 30"MIN., 48"MAX.

VENTING PROVISIONS:

FOR SLOPE = 0.5% AND L≤ 100':

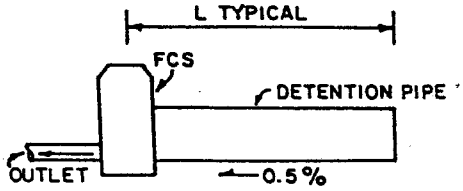

METHOD I
CROSS SECTION

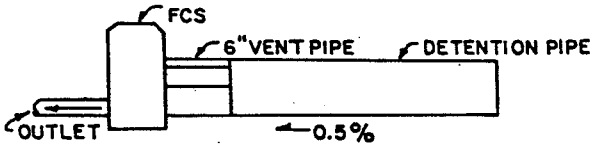

METHOD II
CROSS SECTION

FOR SLOPE >0.5 % AND L≤ 100':

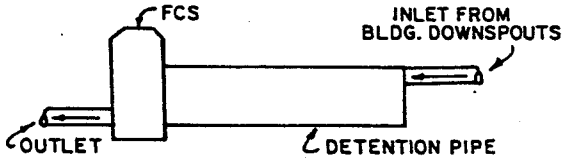

METHOD III
CROSS SECTION

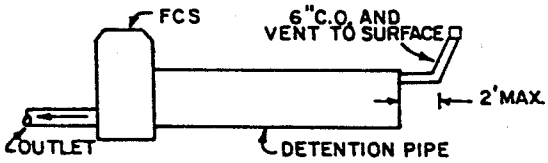

METHOD IV
CROSS SECTION

FOR L>100': UPSTREAM M.H. REQUIRED

Figure 15. Ring and Cover (SP 230.1)

STANDARD PLAN NO 230

REV DATE: 1999

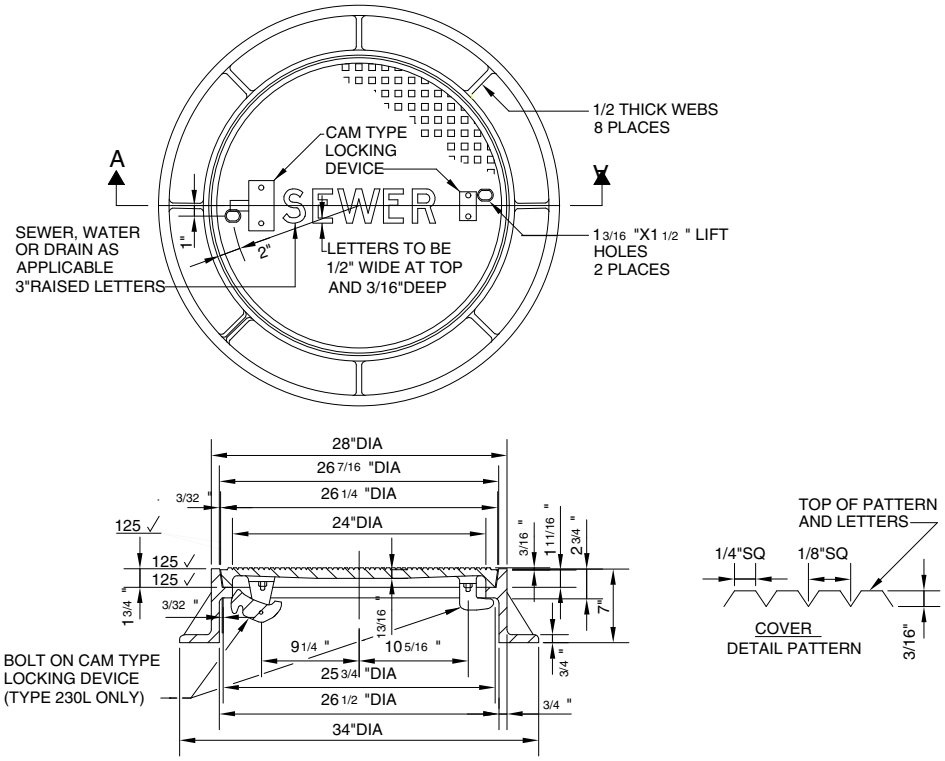

SECTION A-A

NOTES:

1. DESIGNATE LOCKING COVER AS 230L
2. FOR PAVEMENT DEPTH 7" THE FRAME AND COVER SHALL BE CONSTRUCTED TO THE FINISHED GRADE OF THE PAVEMENT. REINFORCEMENT SHALL BE PLACED AROUND THE CASTING AT MID-POINT BETWEEN THE FINISHED GRADE OF THE PAVEMENT AND THE TOP OF THE FLANGE. #4 REINFORCING BARS SHALL BE USED IN THE CONFIGURATION OF 2 SEPARATE SQUARES OFF-ROTATED 45 DEGREES FROM EACH OTHER AND GIVING A CLEARANCE OF 2 INCHES AT THE SHORTEST DISTANCE WITH THE FRAME
3. FOR PAVEMENT DEPTH GREATER THAN 7" USE FRAME EXTENSION(S) (STANDARD PLAN NO 231) TO BRING THE COVER UP TO THE LEVEL OF THE FINISHED PAVEMENT WITHOUT EMBEDDING THE BOTTOM FLANGE OF THE CASTING IN THE PAVEMENT
4. COVER THICKNESS IS MEASURED FROM THE BOTTOM OF THE PATTERN
5. REFER TO SECTION 5-05 FOR OTHER REQUIREMENTS FOR REINFORCING BARS
6. FRAMES SHALL BE MANUFACTURED FROM CAST IRON OR DUCTILE IRON
7. COVERS SHALL BE MANUFACTURED FROM DUCTILE IRON

REF STD SPEC SEC 7-05 & 9-12

	CITY OF SEATTLE PUBLIC UTILITIES DEPARTMENT	2'-0"DIAMETER FRAME AND COVER

Figure 16. Type 200 Manhole (SP 200.1a)

STANDARD PLAN NO 200a

REV DATE: 1999

NOTES:

1. TYPE A MANHOLE DESIGNATES MANHOLES WITH PRECAST CONCENTRIC CONE SECTIONS.
2. TYPE B MANHOLE DESIGNATES MANHOLES WITH TOP SLABS.
3. TOP SLAB AND BASE SECTION DETAILS, SEE STANDARD PLAN NO 200b.
4. MAXIMUM DIMENSION FROM OUTSIDE MANHOLE WALL TO THE FIRST PIPE JOINT. THE GREATER OF 1/2 INSIDE PIPE DIAMETER OR 1'-0".
5. FOR TYPE A MANHOLE, LOCATE MANHOLE STEPS ON THE SIDE PERPENDICULAR TO THE DIRECTION OF THE FLOW IN THE CHANNEL.
6. FOR TYPE B MANHOLE, LOCATE MANHOLE STEPS OPPOSITE TO THE DOWNSTREAM OPENING.
7. TOTAL HEIGHT OF AN EXTENSION, MANHOLE FRAME AND LEVELING BRICKS SHALL NOT EXCEED 2'-2".
8. MANHOLE BASE SECTIONS SHOWN IN SECTION A-A AND SECTION B-B ARE TYPICAL FOR TYPE A AND TYPE B MANHOLES.
9. THE MAXIMUM HOLE SIZE SHALL BE THE OUTSIDE DIAMETER OF THE PIPE PLUS THE MANHOLE WALL THICKNESS. THE MINIMUM HOLE SIZE SHALL BE THE OUTSIDE DIAMETER OF THE PIPE PLUS 4 INCHES. MINIMUM DISTANCE BETWEEN HOLES IS 8 INCHES.
10. PRECAST MANHOLE COMPONENTS SHALL CONFORM TO ASTM C478. JOINTS BETWEEN PRECAST COMPONENTS SHALL BE RUBBER GASKETED CONFORMING TO ASTM C443.

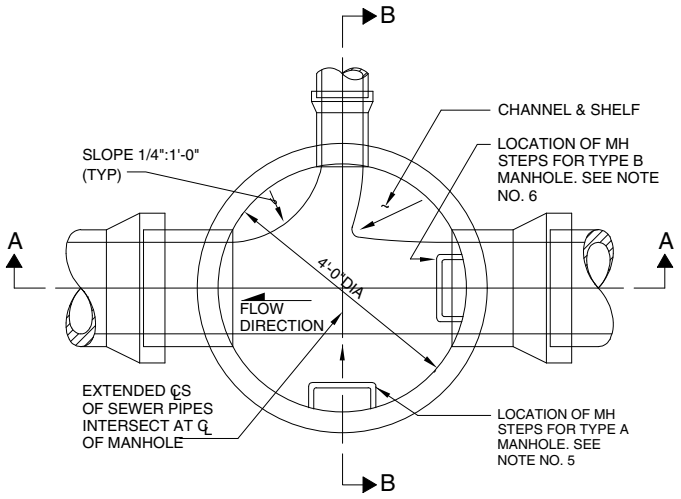

PLAN VIEW
(TOP REMOVED)

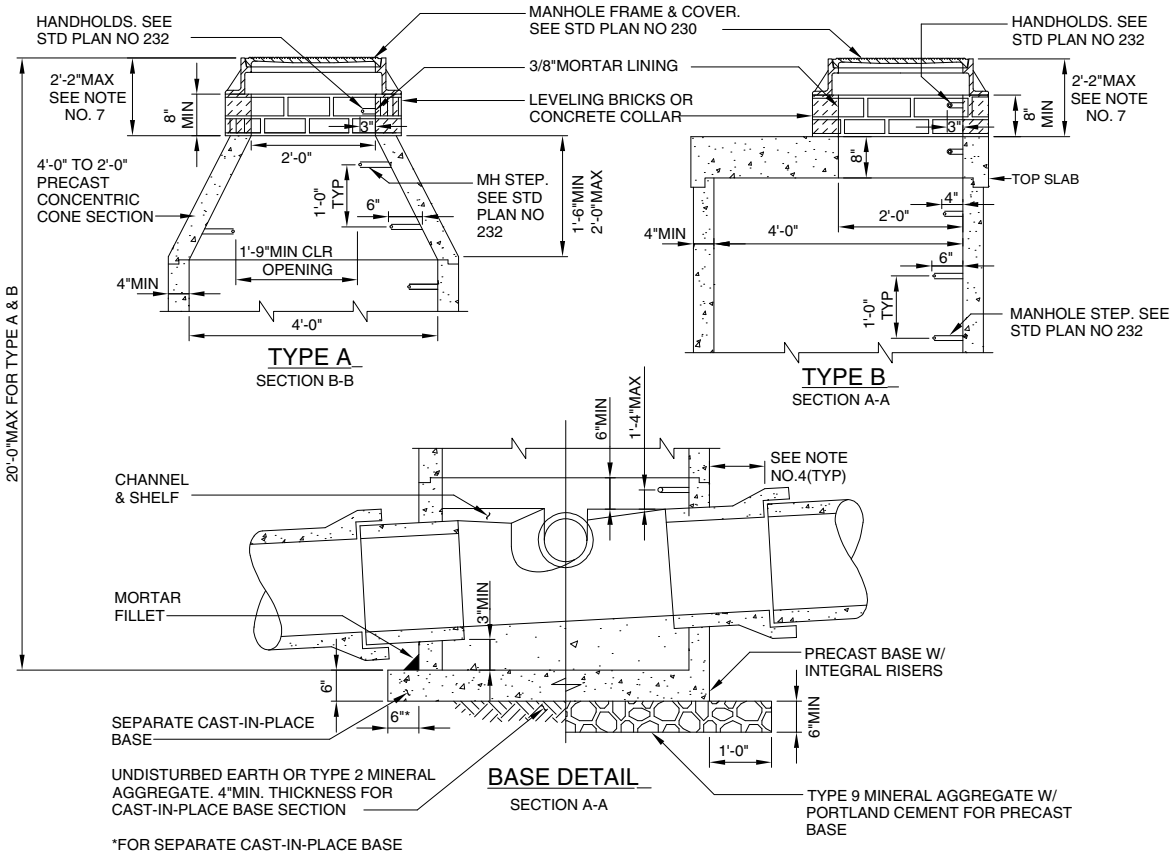

REF STD SPEC SEC 7-05

	CITY OF SEATTLE PUBLIC UTILITIES DEPARTMENT	TYPE 200 MANHOLE

Figure 17. Tee Installation, Corrugated Metal Pipe (SP 279)

STANDARD PLAN NO 279

REV DATE: 1999

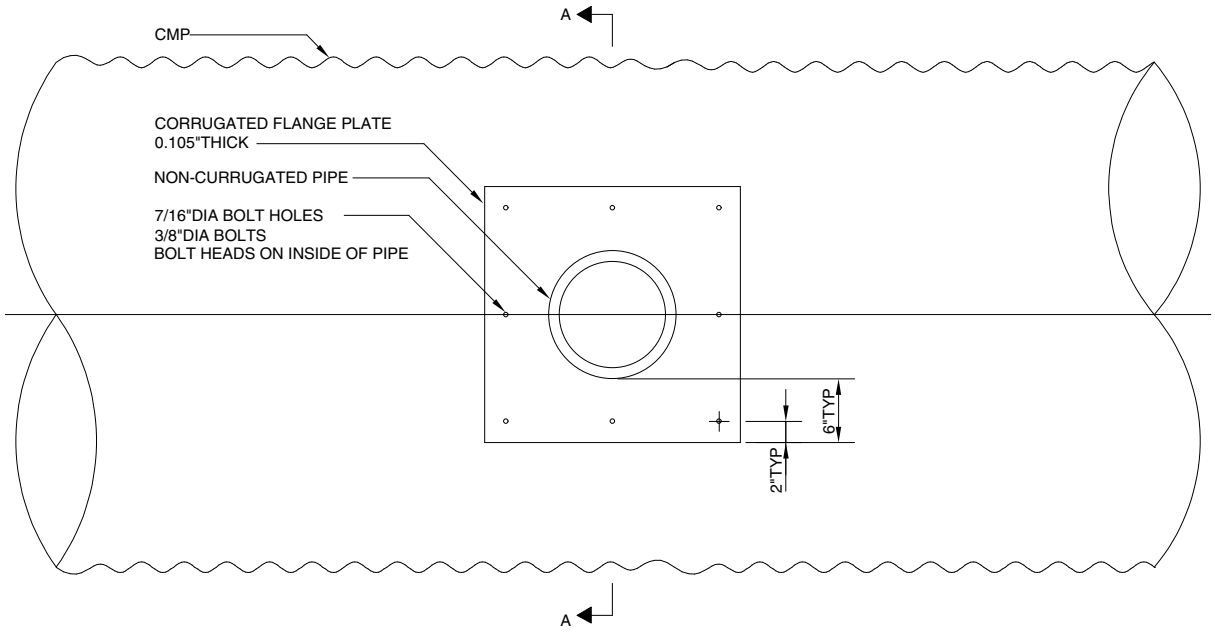

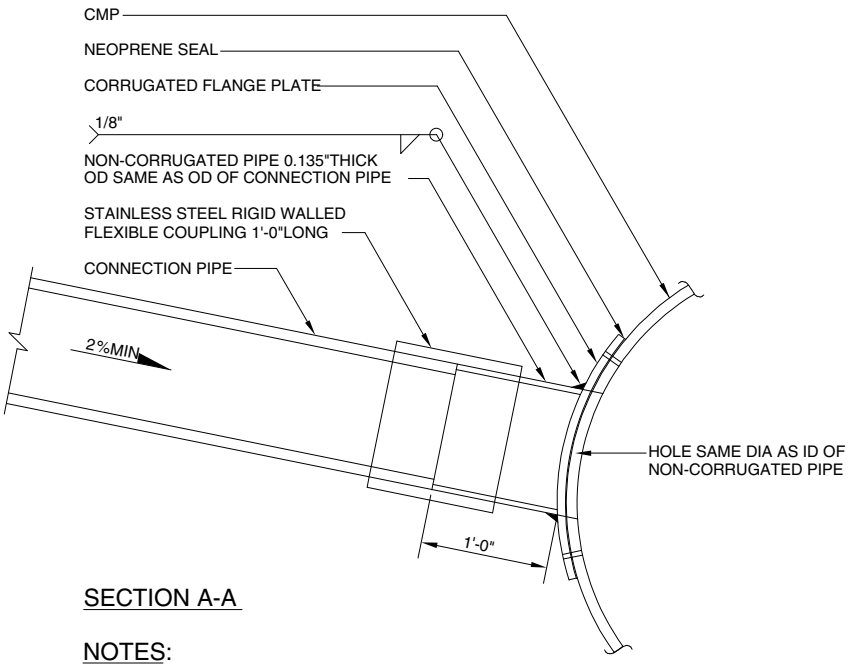

SECTION A-A

NOTES:

1. CORRUGATED FLANGE PLATE AND NON-CORRUGATED PIPE TO BE SAME MATERIAL AND HAVE SAME COATING AS CMP
2. BOLTS TO BE GALV STEEL MEETING ASTM A-307 OR STAINLESS STEEL MEETING ASTM A-193

	CITY OF SEATTLE PUBLIC UTILITIES DEPARTMENT	TEE INSTALLATION CORRUGATED METAL PIPE

Figure 18. Dual orifice

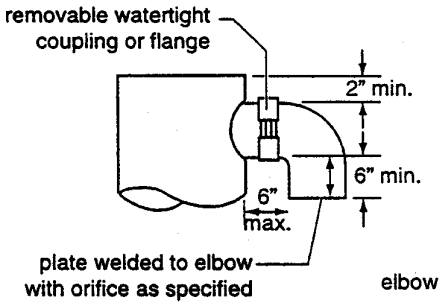

ELBOW RESTRICTOR DETAIL
NTS

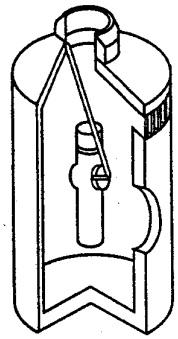

ISOMETRIC
NTS

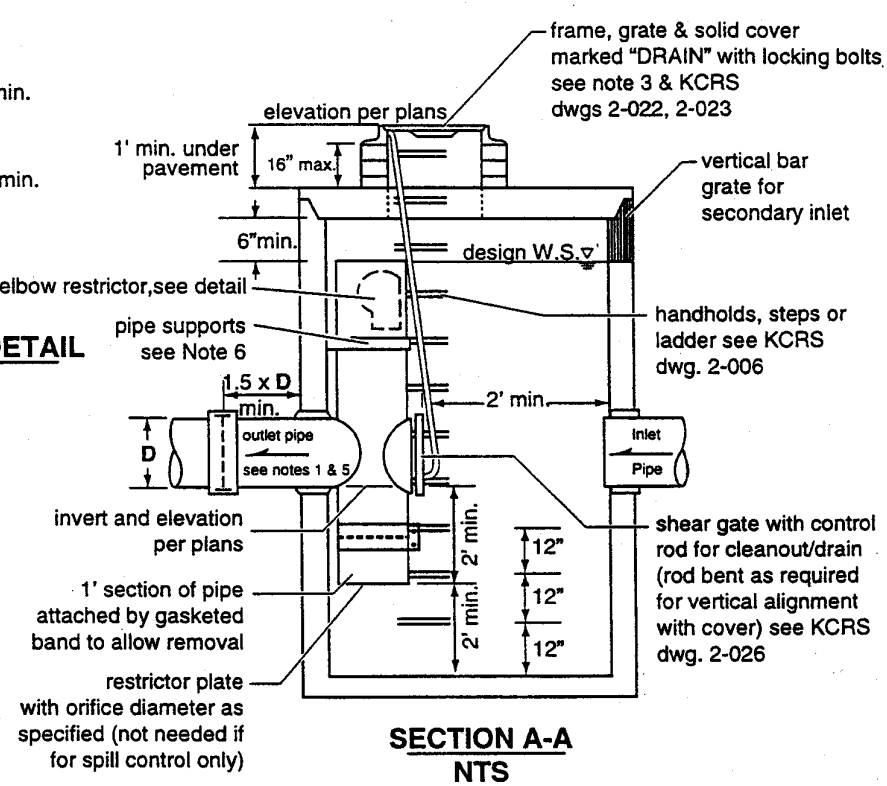

SECTION A-A
NTS

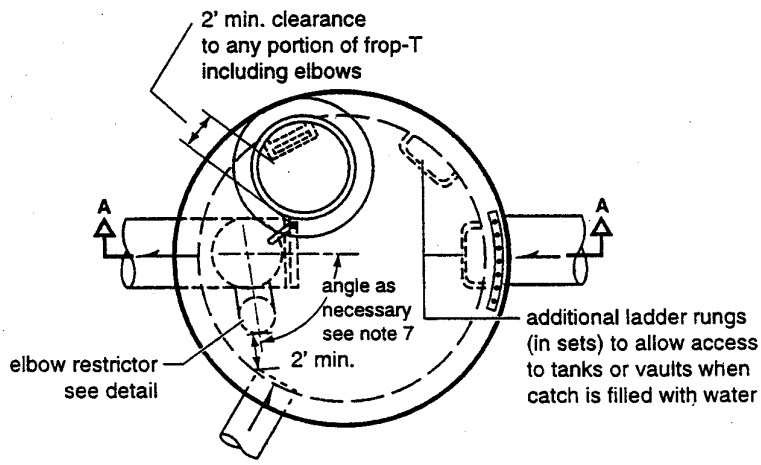

PLAN VIEW
NTS

NOTES:

1. Use a minimum of a 54" diameter type 2 catch basin.
2. Outlet Capacity: 100-Year developed peak flow.
3. Metal Parts: Corrosion resistant. Non-Galvanized parts perferred. Galvanized pipe parts to have asphalt treatment 1.
4. Frame and ladder or steps offset so:
   A. Cleanout gate is visible from top.
   B. Climb-down space is clear of riser and cleanout gate.
   C. Frame is clear of curb.
5. If metal outlet pipe connects to cement concrete pipe: outlet pipe to have smooth O.D. equal to concrete pipe I.D. less 1/4".
6. Provide at least one 3" X .090 gage support bracket anchored to concrete wall. (maximum 3'-0" vertical spacing)
7. Locate elbow restrictor(s) as necessary to provide minimum clearance as shown.
8. Locate additional ladder rungs in structures used as access to tanks or vaults to allow access when catch basin is filled with water.

Appendix D: Maintenance Requirements

Introduction

This appendix outlines inspection, maintenance, and recordkeeping requirements. Each section includes a description and lists the inspection and maintenance requirements of each type of drainage system. The inspection and maintenance requirements include information about what features to inspect at each facility, when and how often these systems should be inspected, and how to identify specific defects that warrant corrective action. Corrective actions are described that should be taken to maintain system performance. The description includes basic information about the common types of drainage systems used to detain urban runoff, how they function, and how well they perform in removing stormwater pollutants. The types of drainage systems covered in this appendix include:

- Catch basins, maintenance holes, and storm drain inlets
- Vaults, tanks, and pipes
- Bioengineered Planting Strips (swales and filter strips)
- Infiltration trenches
- Ponds and constructed wetlands

Catch Basins, Maintenance Holes, and Storm Drain Inlets

Grated and curb-inlet type catch basins are designed to collect and direct runoff into the storm drainage system, as well as to trap debris and litter present in roadway runoff. Unlike maintenance holes and inlets, catch basins contain a sump at the bottom of the structure to collect sediment and other debris. The purpose of the sump is to prevent the downstream pipes from becoming clogged and to prevent sediment and debris from being discharged into receiving waters. In addition, the outlet pipe on catch basins in Seattle is typically installed with a downturned elbow or tee to trap floatable material. Storm drain inlets and maintenance holes which do not contain sumps are not effective in removing pollutants from stormwater.

Pollutant Removal Efficiency

Catch basins are capable of removing larger size sediment particles (e.g., sand and gravel) and debris (e.g., pine needles, leaves, and litter). Typical removal pollutant efficiencies for catch basins are provided below:

Pollutant	Removal Efficiency (percent)
Total suspended solids	10-25
Total phosphorus	5-10
Total nitrogen	5-10
Lead	10-25
Zinc	5-10
Hydrocarbons	0

Table 14. Maintenance Requirements for Catch Basins, Maintenance Holes, and Inlets

CATCH BASIN	INSPECTION FREQUENCY[1]			
Components	**W**	**A**	**Condition when maintenance required**	**Action Required**
CLEANING				
Trash, debris, sediment, vegetation	✓	✓	Accumulated material within 18 inches of the bottom of the lowest pipe entering or exiting the structure.	Remove/dispose
	✓	✓	Sediment visible in inlet/outlet pipes.	Rod lines
	✓	✓	Root intrusion greater than 6 inches in length or less than 6 inches apart	Root saw pipes
	✓	✓	Vegetation/debris on inlet grate.	Clean and dispose material
Pollution	✓	✓	Chemicals (solvents, gas, diesel, paint, natural gas) present	Identify and control source.
STRUCTURE				
Frame and/or top slab		✓	Corner extends more than 0.75 inch past curb face or street surface (where applicable)	Repair so frame even with curb
		✓	Holes greater than 2" or cracks greater than 0.5" in top slab	Repair to water tight condition
		✓	Frame not flush with top slab (separation >0.75")	Repair
CB structure		✓	Cracks wider than 0.5" and longer than 3 feet, missing bricks, or any evidence of water leakage, bricks missing	Repair
		✓	Cracks wider than 0.5" and longer than 1 foot at pipe inlet/outlet	Repair
Cover/grate		✓	Cover/grate missing, damaged, or only partially in place	Repair/replace
		✓	Cannot be opened by one person. Locking bolts missing or damaged	Repair/replace
	✓	✓	Buried	Excavate
Ladder		✓	Ladder rungs damaged, missing, or misaligned	Repair/replace

[1] **Inspection frequency:**

W = Wet season inspections. Inspect the items that are checked once in the early part of the wet season (December) and again near the end of the wet season (March).

A = Annual inspection. Inspect the items that are checked once each year. To avoid interference caused by rainfall, the annual inspection should be conducted during the dry season (August - September).

Vaults, tanks, and pipes

Vaults, tanks, and pipes are underground storage facilities that can be designed as dry systems (i.e., detention for flow control), wet systems for water quality treatment, or as combined systems that provide both flow and water quality control. Underground facilities are generally used to manage storm water from smaller sites (e.g., less than 5 acres). Vaults are typically constructed of reinforced concrete, while tanks and pipes are usually made of corrugated metal or plastic pipe.

Dry vaults/tanks. In Seattle, dry vaults/tanks (i.e., detention) are most common. Detention systems are designed primarily to control the rate of runoff from developed sites. Runoff enters the vault or tank and is temporarily stored as water is slowly released through a small orifice to the downstream drainage system. Detention storage is often referred to as "live" storage. Controlling peak discharge rates from developed sites reduces stream bank erosion and minimizes flooding in downstream areas. Detention vaults/tanks are designed to drain completely dry following storm events. Although not specifically designed to provide water quality treatment, these systems can also remove some pollutants if the storage volume is large enough to adequately detain incoming runoff. Typically a storage time of 24 hours or more is needed for a detention vault/tank to provide any significant amount of pollutant removal. Removal occurs primarily via sedimentation as suspended solids and particulate-bound pollutants settle out in the vault/tank.

Wet vaults/tanks. Wet vaults/tanks contain a permanent pool (i.e., wet pool) that functions as an energy dissipater, slowing the velocity of incoming storm water and allowing suspended sediment to settle. The permanent pool volume is generally referred to as "dead" storage. Wet vaults/tanks typically provide no live storage for flow control purposes and function only as water treatment devices.
Combined systems. Combined systems simply incorporate the live storage of a dry vault/tank with the dead storage (i.e., wet pool) of a wet vault/tank into a single facility. Consequently, these facilities provide both flow control and water quality treatment. Pollutant removal mechanisms in a combined system are similar to those described above under water quality ponds.

Pollutant Removal Efficiency

Pollutant removal in vaults, tanks, and pipes occurs primarily via sedimentation. Opportunities for biological treatment are negligible in these below ground structures. In addition, it should be pointed out that tank/pipe systems constructed of galvanized pipe are likely a source of zinc to the downstream system. Vaults, tanks, and ponds remove suspended sediment and particulate-bound pollutants. Typical removal efficiencies are provided below:

	Pollutant Removal Efficiency (percent)	
Pollutant	**Dry Vault[a]**	**Wet Vault[a]**
Total suspended solids	10-60	40-75
Total phosphorus	10-25	20-60
Total nitrogen	10-15	10-75
Lead	60-80	10-80
Zinc	25-50	10-80
Hydrocarbons	40-60	

[a] Vault removal efficiencies estimated at 85 percent of pond removal efficiencies.

Table 15. Maintenance Requirements for Dry/Wet Vaults, Tanks, Pipes

	INSPECTION FREQUENCY			
Vault Components	**W**	**A**	**Condition when maintenance required**	**Action Required**
GENERAL				
Trash/debris	✓	✓	More than 1 ft^3	Remove/dispose
Sediment		✓	Accumulated sediment in vault/tank exceeds 6 inches.	Remove/dispose
Pollution *(check for noticeable sheen or unusual odor)*		✓	Any visible accumulation of oil, gas, or other contaminant.	Remove/dispose
VAULT/TANK STRUCTURE				
Ladder		✓	Ladder rungs damaged, missing, or misaligned	Repair/replace
Concrete *(inspect when vault cleaned)*		✓	Riser, concrete walls, or joints cracked or leaking. Bricks missing. Cracks greater than 0.5 inches wide.	Repair
Maintenance holes		✓	Cannot be opened by one person. Locking bolts missing or damaged	Repair/replace
		✓	Buried	Excavate
Inlet grates		✓	Cracked or broken grate	Replace
Baffle(s)		✓	Corroded, cracked, or warped.	Repair/replace
Air vents		✓	Plugged or blocked with debris	Clean
CONTROL STRUCTURE				
Shear gate (*exercise full open/close and inspect)*		✓	Gate cannot be operated by 1 person	Lubricate, repair, or replace
		✓	Gate rusted, not watertight, or missing	Repair/replace
		✓	Chain or pull rod missing	Replace
		✓	Not plumb within 10%	Repair
		✓	Connection to outlet pipe rusted or leaking	Repair/replace
Orifice plates *(inspect when vault cleaned)*		✓	Bent, rusted, or missing	Replace
Sediment/debris		✓	More than 12 inches of accumulated material.	Clean/remove
Outlet pipe		✓	Submerged or partially submerged	Check for downstream obstruction
Oil absorbent pads		✓	Pads missing or stained over more than 75% of pad area	Remove and replace
SHUTOFF VALVE AND/OR MAINTENANCE DRAIN				
Valve exercised		✓	Valve cannot be operated by 1 person. Valve rusted or not watertight.	Repair/replace
Sediment		✓	Vertical distance between sediment and drain pipe is less than 6 inches.	Remove and dispose
INLET/OUTLET				
Trash rack	✓	✓	Trash or other debris present on trash rack.	Clean and dispose trash
		✓	Bar screen damaged or missing	Replace
Pipes		✓	Root intrusion greater than 6 inches in length or less than 6 inches apart	Root saw pipes
Receiving water	✓	✓	Erosion damage along banks	Regrade/armour below outlet

[1] **Inspection frequency:**
W = Wet season inspections. Inspect the items that are checked once in the early part of the wet season (December) and again near the end of the wet season (March).
A = Annual inspection. Inspect the items that are checked once each year. To avoid interferences caused by rainfall, the annual inspection should be conducted during the dry season (August - September).

Bioengineered Planting Strips

A Bioengineered Planting Strip is an excavated trench backfilled with gravel and sandy loam and planted with groundcover and shrubs. Although the planting strip is designed to provide flow control, these facilities have the added benefit of removing pollutants by filtering stormwater through vegetation. They are usually planted with grass, however other vegetation such as emergent wetland species can be used depending on site conditions.

The bioengineered planting strips included in this manual are designed for flow control. However, bioengineered planting strips are likely effective in removing suspended sediment and particulate-bound pollutants via filtration and sedimentation. Dense vegetation aids in the filtration process as particulates and associated pollutants adhere to the grass blades as runoff passes through the filter. Sedimentation occurs when runoff is spread across the large filtration area, thus reducing the flow velocity and allowing particles to settle in the filter. To a lesser extent, bioengineered planting strips can remove dissolved pollutants through biological and chemical mechanisms. Biological removal occurs primarily through plant uptake and microbial degradation. Removal efficiencies for bioengineered planting strips are still being determined.

Table 16. Maintenance Requirements for Bioengineered Planting Strips

SWALE/FILTER TIP			INSPECTION FREQUENCY	
Components	**W**	**A**	**Condition when maintenance required**	**Action Required**
SWALE/FILTER AREAS				
Trash/yard waste	✓	✓	More than 1 ft^3	Remove/dispose
Sediment	✓	✓	Accumulated sediment exceeds 4 inches or covers grass, especially within the upper section, near inlet.	Remove/dispose sediment. Restore grass, protect from erosion until vegetation established.
Pollution		✓	Any visible accumulation of oil, gas, or other contaminant.	Remove/dispose
Noxious weeds		✓	Any nuisance or noxious veg. (morning glory, English ivy, reed canary grass, Japanese knotweed, purple loosestrife, blackberry, Scotch broom, tansy, poison oak, stinging nettles, devils club).	Remove and dispose cuttings
Grass/vegetation		✓	Poor vegetation growth (<75 percent coverage)	Aerate soil, fertilize with 21-3-21 low P fertilizer, and reseed
Flow characteristics		✓	Standing/stagnant water, no visible water movement.	Check for downstream obstruction.
Erosion/scouring		✓	Flow channelized, forming rills/gullies more than 2 inches deep.	Regrade swale bottom, re-install flow spreader, revegetate, protect from erosion until vegetation established.
FLOW SPREADER				
Sediment	✓	✓	Ports/notches clogged or sediment trap filled.	Remove and dispose
Grade board/baffle	✓	✓	Damaged or not level	Remove and reinstall to level position.

[1] **Inspection frequency:**

W = Wet season inspections. Inspect the items that are checked once in the early part of the wet season (December) and again near the end of the wet season (March).

A = Annual inspection. Inspect the items that are checked once each year. To avoid interference caused by rainfall, the annual inspection should be conducted during the dry season (August - September).

Infiltration Trenches

Infiltration trenches and other stormwater infiltration systems such as rock pockets and dry wells temporarily store stormwater so that it can gradually seep into the underlying soil and groundwater. Infiltration systems treat stormwater runoff by physically filtering particulates and particulate-bound pollutants as the water moves through the soil. In addition, pollutants can sorb onto the soil particles which aids in removing dissolved pollutants. Microbial degradation of some contaminants can also occur as water infiltrates through the soil.

Infiltration systems can also be used to reduce the rate of runoff from a site by removing the volume of runoff that would otherwise be discharged to the surface drainage system and allowing it to infiltrate into the ground. However, due to the relatively low permeability of soil in many areas of the City of Seattle, infiltration systems have fairly limited applicability in the Seattle area. Infiltration systems in Seattle are typically only useful for fairly small sites where the volume of runoff is low.

Pollutant Removal Efficiency

Infiltration systems can provide effective removal of suspended sediment and particulate-bound pollutants. Typical removal efficiencies are provided below:

Pollutant	Pollutant Removal Efficiency (percent)
Total suspended solids	45-100
Total phosphorus	40-100
Total nitrogen	0-100
Lead	45-100
Zinc	45-100
Hydrocarbons	

Table 17. Maintenance Requirements for Infiltration Trenches

			INSPECTION FREQUENCY[1]	
Trench Components	**W**	**A**	**Condition when maintenance required**	**Action Required**
GENERAL				
Trash/debris	✓	✓	More than 1 ft^3	Remove/dispose
Pollution *(check for noticeable sheen or unusual odor)*	✓	✓	Any visible accumulation of oil, gas, or other contaminant	Remove/dispose
Noxious weeds	✓	✓	Any nuisance or noxious veg. (morning glory, English ivy, reed canary grass, Japanese knotweed, purple loosestrife, blackberry, Scotch broom, tansy, poison oak, stinging nettles, devils club).	Remove and dispose cuttings
Drain rock	✓	✓	Water ponds at surface during storm events. Little or no water flows through system	Replace rock material
Roof downspout	✓	✓	Splash pad missing or damaged	Repair/replace
STORAGE SUMP (IF PRESENT)				
Sediment		✓	Accumulated material within 18 inches of the bottom of the outlet pipe.	Remove/dispose
Maintenance holes		✓	Cannot be opened by one person. Lock missing or damaged	Repair/replace
		✓	Buried	Excavate
Pollution *(check for noticeable sheen or unusual odor)*	✓	✓	Any visible accumulation of oil, gas, or other contaminant	Remove/dispose

[1] **Inspection frequency:**

W = Wet season inspections. Inspect the items that are checked once in the early part of the wet season (December) and again near the end of the wet season (March).

A = Annual inspection. Inspect the items that are checked once each year. To avoid interference caused by rainfall, the annual inspection should be conducted during the dry season (August - September).

Ponds and Constructed Wetlands

Like vaults, ponds are storage facilities that can be designed as detention, water quality, or combined systems, except that ponds are above ground rather than underground facilities. Ponds are not commonly used in Seattle because above ground systems require more land to construct, which is usually not available in a highly urban setting. In addition to physical removal via sedimentation, ponds, particularly wet ponds also provide a suitable environment and adequate hydraulic residence time to promote biological and chemical reactions, which improves their ability to remove pollutants from urban runoff. In addition, aquatic plants that establish in the wet pool can also enhance sedimentation and promote pollutant uptake.

Pollutant Removal Efficiency

Well-maintained ponds can provide effective removal of suspended sediment and particulate-bound pollutants. Typical removal efficiencies for extended detention ponds and water quality ponds are provided below:

	Pollutant Removal Efficiency (percent)	
Pollutant	**Dry Pond**	**Wet Pond**
Total suspended solids	10-70	50-90
Total phosphorus	10-30	25-70
Total nitrogen	10-20	10-90
Lead	75-90	10-95
Zinc	30-60	10-95
Hydrocarbons	50-70	

Table 18. Maintenance Requirements for Ponds and Constructed Wetlands

	INSPECTION FREQUENCY[1]			
Pond Components	**W**	**A**	**Condition when maintenance required**	**Action Required**
DRY POND AREAS				
Trash/yard waste	✓	✓	More than 1 ft^3	Remove/dispose
Sediment		✓	Accumulated sediment exceeds 1 foot.	Remove/restore
Pollution	✓	✓	Any visible accumulation of oil, gas, or other contaminant.	Remove/dispose
Noxious weeds		✓	Any nuisance or noxious veg. (morning glory, English ivy, reed canary grass, Japanese knotweed, purple loosestrife, blackberry, Scotch broom, tansy, poison oak, stinging nettles, devils club).	Remove and dispose cuttings
Grass/ground cover		✓	Residential area: mow when grass height reaches 18". In other areas, match adjacent ground cover/terrain as long as there is no interference with facility function.	Mow to 2-inch height. Remove cuttings and dispose
Insects		✓	Wasps, hornets interfere with operations	Remove
Tree/brush growth		✓	Growth does not allow maintenance access, interferes with future maintenance activity (e.g., alder), or reduces storage capacity. Otherwise leave alone.	Remove and restore pond bottom
Fence		✓	Damage to gate/fence, posts out of plumb, or rails bent more than 6 inches.	Repair/replace
		✓	Brush/weeds along fenceline	Remove brush to within 3 feet of fence
		✓	Erosion/settlement causing opening under the fence greater than 4 inches and 12-18 inches wide or openings along fenceline greater than 8-inch diameter.	Repair
EMBANKMENT AND EMERGENCY SPILLWAY				
Spillway		✓	Rock lining down to 1 layer of rock	Add rock to design conditions.
		✓	Brush, tree (alder) growth on spillway.	Remove and dispose
Embankment		✓	Downstream face wet, seeps or leaks evident	Plug holes. Contact geotechnial engineer ASAP
		✓	Any evidence of rodent holes or water piping around holes if facility acts as dam or berm	Eradicate rodents/repair holes (fill and compact)
		✓	Erosion (gullies/rills) greater than 2 inches around inlets, outlet, and along side slopes. Note evidence of leakage through embankment.	Eliminate source of erosion and stabilize damaged area (regrade, rock, vegetation, erosion control blanket)
		✓	Settlement greater than 4 inches (relative to undisturbed sections of berm)	Restore to design height

Table 18. Maintenance Requirements for Ponds and Constructed Wetlands (cont. from pg. 56)

	INSPECTION FREQUENCY[1]			
Pond Components	**W**	**A**	**Condition when maintenance required**	**Action Required**
CONTROL STRUCTURE				
Shear gate (*exercise full open/close and inspect)*				Lubricate, repair, or replace
Shear gate (cont)		✓	Gate rusted, not watertight, or missing	Repair/replace
		✓	Chain or pull rod missing	Replace
Riser		✓	Loose, not firmly attached to manhole wall	Repair
		✓	Not plumb within 10%	Repair
		✓	Connection to outlet pipe rusted or leaking	Repair/replace
Maintenance hole		✓	Cannot be opened by one person. Lock missing or damaged	Repair/replace
		✓	Buried	Excavate
Orifice plate(s)		✓	Bent, rusted, or missing	Replace
Structural integrity		✓	Ladder rungs damaged, missing, or misaligned	Repair/replace
		✓	Cracks wider than 0.5" and longer than 3 feet, missing bricks, or any evidence of water leakage	Repair
		✓	Lock bolts on maintenance hole cover missing	Replace
		✓	Cracked or broken grate	Replace
Sediment, trash		✓	Accumulated material within 18 inches of the bottom of the outlet pipe.	Remove/dispose
Outlet pipe		✓	Submerged or partially submerged	Check for downstream obstruction
		✓	Root intrustion greater than 6 inches in length or less than 6 inches apart	Root saw pipes
PERMANENT POOL (WET PONDS)				
Undesirable or excessive vegetation		✓	Undesirable plants: Eurasion water-milfoil, Brazilian elodea, yellow iris, purple loosestrife, parrotfeather, white pond lily, reed canary grass, and Japanese knotweed. Remove if growth affects storage capacity: willows, cattails.	Remove and replant with sedges, rushes, other wetland plants.
Sediment		✓	Accumulated sediment greater than depth of the sediment zone in forebay (typically 1 foot) plus 6 inches.	Remove, regrade, and replant pond bottom.
SHUTOFF VALVE AND/OR MAINTENANCE DRAIN				
Valve exercised		✓	Valve cannot be operated by 1 person. Valve rusted or not watertight.	Repair/replace
Sediment		✓	Vertical distance between sediment and drain pipe is less than 6 inches.	Remove and dispose
POND OUTLET				
Trash rack	✓	✓	Trash or other debris present on trash rack.	Clean and dispose trash
		✓	Bar screen damaged or missing	Replace
Inlet/outlet pipes			Root intrusion greater than 6 inches in length or less than 6 inches apart	Root saw pipes
Receiving water	✓	✓	Erosion damage along banks	Regrade/armour below outlet

[1] **Inspection frequency:**

W = Wet season inspections. Inspect the items that are checked once in the early part of the wet season (December) and again near the end of the wet season (March).

A = Annual inspection. Inspect the items that are checked once each year. To avoid interference caused by rainfall, the annual inspection should be conducted during the dry season (August - September).

Appendix E: Planter Sizing Method Example

The following example illustrates how to use the Planter Strip Method described in Chapter 1 to size a Stormwater Planter. The spreadsheet on the following pages determines the minimum stormwater planter square footage, by calculating the storage demand (cumulative inflow-outflow in cubic feet) for a 25-year, 24-hour design storm hyetograph, a 5,000 square footage drainage area, and a storage depth of 12 inches.

Given:

Input	Parameter
18 inches	Depth of First Layer of Soil (L1)
12 inches	Depth of Second Layer of Soil (L2)
30 inches	Total Depth of Soil
2 in/hr	Permeability of First layer (K1)
5 in/hr	Permeability of Second Layer (K2)
2.63 in/hr	Average Permeability = average infiltration rate (in/hr) = (Kavg) = (L1 + L2)/ (L1/K1 +L2/K2)
0.34	Effective Porosity of First layer
0.31	Effective Porosity of Second layer
25 yr storm	Storm Hydrograph Routed Through Planter (SBUH)
5000 sf	Size of Impervious Area
0.115 acres	
0.2 cfs/acre	Maximum Outflow Rate Allowed for 25-year Storm
0.023 cfs	Maximum Outflow Rate Allowed From Planter (Area x 0.2 cfs/acre)
0.017 cfs	Maximum Outflow from Planter (= Maximum Outflow Rate from Column 6)

Calculate:

Output	Parameter
281 sf	Area of Planter (Use *Goal Seek* in Excel *Tools* to set Value of Planter Depth equal to 12 inches by Changing Area of Planter)
0.006 acres	
12.00 inches	Storage Depth (= Maximum Depth in Planter = Maximum Value in Column 11)
1206 cf	Total Inflow (= sum of Column 3)

The spreadsheet columns are described as the following:

Column (1)	time in minutes
Column (2)	Inflow for 25yr storm and 5000 sf of impervious area using SBUH and City of Seattle Hyetograph
Column (3)	Inflow (cf) = Inflow (cfs) x 60 x 10
Column (4)	Inflow (in) = Inflow (cf) x 12 /Area (sf)
Column (5)	Cumulative inflow (in) = inflow (in) + Cumulative inflow (in) of previous time step
Column (6)	Outflow (cfs) = (Area (sf) x permeability of composite (in/hr)) / (12 x 3600)
Column (7)	Cumulative outflow (cf) = outflow (cfs) x 10 x 60 + Cumulative outflow (cf) of previous time step
Column (8)	Inflow-outflow (cfs) = inflow (cfs) - outflow (cfs)
Column (9)	Incremental inflow - outflow (cf) = inflow-outflow (cfs) x 10 x 60
Column (10)	Cumulative inflow - outflow (cf) = If incremental inflow - outflow (cf) + Cumulative inflow - outflow (cf) of previous time step is less than 0, 0; if not then = incremental inflow - outflow (cf) + Cumulative inflow - outflow (cf) of previous time step)
Column (11)	Cumulative depth (in) = cumulative inflow - outflow (cf) x 12 / Area (sf)

Spreadsheet illustrating Planter Sizing Method described in Chapter 1.

(1) Time (min)	(2) Inflow (cfs)	(3) Inflow Volume (cf)	(4) Inflow Volume (in)	(5) Cumulative Inflow (in)	(6) Outflow (cfs)	(7) Cumulative Outflow Vol. (cf)	(8) Inflow-outflow (cfs)	(9) Incremental Inflow-Outflow (cf)	(10) Cumulative Inflow-Outflow (cf)	(11) Cumulative Depth (in)
0	0.000	0.000	0.000	0.000	0.017	0.000	-0.017	-10.280	0.000	0.000
10	0.000	0.000	0.000	0.000	0.017	10.280	-0.017	-10.280	0.000	0.000
20	0.000	0.000	0.000	0.000	0.017	20.560	-0.017	-10.280	0.000	0.000
30	0.000	0.079	0.003	0.003	0.017	30.839	-0.017	-10.200	0.000	0.000
40	0.001	0.426	0.018	0.022	0.017	41.119	-0.016	-9.854	0.000	0.000
50	0.002	0.928	0.040	0.061	0.017	51.399	-0.016	-9.351	0.000	0.000
60	0.002	1.364	0.058	0.119	0.017	61.679	-0.015	-8.916	0.000	0.000
70	0.003	1.736	0.074	0.193	0.017	71.959	-0.014	-8.544	0.000	0.000
80	0.003	2.057	0.088	0.281	0.017	82.238	-0.014	-8.223	0.000	0.000
90	0.004	2.334	0.100	0.381	0.017	92.518	-0.013	-7.945	0.000	0.000
100	0.005	2.934	0.125	0.506	0.017	102.798	-0.012	-7.345	0.000	0.000
110	0.006	3.557	0.152	0.658	0.017	113.078	-0.011	-6.723	0.000	0.000
120	0.006	3.839	0.164	0.822	0.017	123.358	-0.011	-6.440	0.000	0.000
130	0.007	4.083	0.174	0.996	0.017	133.637	-0.010	-6.197	0.000	0.000
140	0.007	4.295	0.183	1.179	0.017	143.917	-0.010	-5.985	0.000	0.000
150	0.007	4.480	0.191	1.370	0.017	154.197	-0.010	-5.799	0.000	0.000
160	0.009	5.129	0.219	1.589	0.017	164.477	-0.009	-5.151	0.000	0.000
170	0.010	5.787	0.247	1.836	0.017	174.757	-0.007	-4.493	0.000	0.000
180	0.010	5.966	0.255	2.091	0.017	185.036	-0.007	-4.314	0.000	0.000
190	0.010	6.122	0.261	2.352	0.017	195.316	-0.007	-4.157	0.000	0.000
200	0.010	6.260	0.267	2.619	0.017	205.596	-0.007	-4.020	0.000	0.000
210	0.011	6.381	0.272	2.891	0.017	215.876	-0.006	-3.899	0.000	0.000
220	0.012	7.044	0.301	3.192	0.017	226.156	-0.005	-3.236	0.000	0.000
230	0.013	7.711	0.329	3.521	0.017	236.436	-0.004	-2.569	0.000	0.000
240	0.013	7.825	0.334	3.854	0.017	246.715	-0.004	-2.455	0.000	0.000
250	0.013	7.927	0.338	4.193	0.017	256.995	-0.004	-2.353	0.000	0.000
260	0.013	8.017	0.342	4.535	0.017	267.275	-0.004	-2.263	0.000	0.000
270	0.013	8.097	0.345	4.880	0.017	277.555	-0.004	-2.183	0.000	0.000
280	0.015	8.867	0.378	5.259	0.017	287.835	-0.002	-1.412	0.000	0.000
290	0.016	9.641	0.411	5.670	0.017	298.114	-0.001	-0.639	0.000	0.000
300	0.016	9.720	0.415	6.085	0.017	308.394	-0.001	-0.560	0.000	0.000
310	0.016	9.789	0.418	6.502	0.017	318.674	-0.001	-0.491	0.000	0.000
320	0.016	9.852	0.420	6.923	0.017	328.954	-0.001	-0.428	0.000	0.000
330	0.017	9.908	0.423	7.345	0.017	339.234	-0.001	-0.372	0.000	0.000
340	0.018	10.757	0.459	7.804	0.017	349.513	0.001	0.477	0.477	0.020
350	0.019	11.608	0.495	8.300	0.017	359.793	0.002	1.328	1.805	0.077
360	0.019	11.663	0.498	8.797	0.017	370.073	0.002	1.383	3.188	0.136
370	0.020	11.712	0.500	9.297	0.017	380.353	0.002	1.432	4.620	0.197
380	0.020	11.757	0.502	9.798	0.017	390.633	0.002	1.477	6.097	0.260
390	0.020	11.797	0.503	10.302	0.017	400.912	0.003	1.517	7.614	0.325
400	0.024	14.171	0.605	10.906	0.017	411.192	0.006	3.892	11.505	0.491
410	0.028	16.556	0.706	11.613	0.017	421.472	0.010	6.277	17.782	0.759
420	0.028	16.613	0.709	12.322	0.017	431.752	0.011	6.333	24.115	1.029
430	0.033	19.624	0.837	13.159	0.017	442.032	0.016	9.344	33.459	1.428
440	0.038	22.645	0.966	14.125	0.017	452.311	0.021	12.365	45.824	1.955
450	0.063	37.707	1.609	15.734	0.017	462.591	0.046	27.427	73.251	3.125
460	0.150	89.702	3.827	19.561	0.017	472.871	0.132	79.422	152.673	6.514
470	0.134	80.663	3.442	23.003	0.017	483.151	0.117	70.383	223.056	9.517
480	0.048	28.866	1.232	24.234	0.017	493.431	0.031	18.586	241.643	10.310
490	0.034	20.143	0.859	25.094	0.017	503.710	0.016	9.863	251.506	10.731
500	0.029	17.212	0.734	25.828	0.017	513.990	0.012	6.933	258.439	11.027
510	0.029	17.222	0.735	26.563	0.017	524.270	0.012	6.942	265.381	11.323
520	0.024	14.282	0.609	27.172	0.017	534.550	0.007	4.002	269.383	11.493
530	0.019	11.338	0.484	27.656	0.017	544.830	0.002	1.058	270.441	11.539
540	0.019	11.342	0.484	28.140	0.017	555.109	0.002	1.062	271.503	11.584

(1)	(2)	(3)	(4)	(5)	(6)	(7)	(8)	(9)	(10)	(11)
Time	Inflow	Inflow Volume	Inflow Volume	Cumulative Inflow	Outflow	Cumulative Outflow Vol.	Inflow-outflow	Incremental Inflow-Outflow	Cumulative Inflow-Outflow	Cumulative Depth
(min)	(cfs)	(cf)	(in)	(in)	(cfs)	(cf)	(cfs)	(cf)	(cf)	(in)
550	0.019	11.345	0.484	28.624	0.017	565.389	0.002	1.065	272.569	11.629
560	0.019	11.349	0.484	29.108	0.017	575.669	0.002	1.069	273.638	11.675
570	0.019	11.352	0.484	29.592	0.017	585.949	0.002	1.072	274.710	11.721
580	0.019	11.355	0.484	30.077	0.017	596.229	0.002	1.075	275.785	11.767
590	0.019	11.358	0.485	30.561	0.017	606.509	0.002	1.078	276.862	11.813
600	0.019	11.360	0.485	31.046	0.017	616.788	0.002	1.081	277.943	11.859
610	0.019	11.363	0.485	31.531	0.017	627.068	0.002	1.083	279.026	11.905
620	0.019	11.366	0.485	32.016	0.017	637.348	0.002	1.086	280.112	11.951
630	0.019	11.368	0.485	32.501	0.017	647.628	0.002	1.088	281.201	11.998
640	0.017	10.333	0.441	32.942	0.017	657.908	0.000	0.054	281.254	12.000
650	0.015	9.298	0.397	33.338	0.017	668.187	-0.002	-0.982	280.273	11.958
660	0.015	9.299	0.397	33.735	0.017	678.467	-0.002	-0.980	279.292	11.916
670	0.016	9.301	0.397	34.132	0.017	688.747	-0.002	-0.979	278.313	11.874
680	0.016	9.302	0.397	34.529	0.017	699.027	-0.002	-0.978	277.336	11.833
690	0.016	9.304	0.397	34.926	0.017	709.307	-0.002	-0.976	276.360	11.791
700	0.016	9.305	0.397	35.323	0.017	719.586	-0.002	-0.975	275.385	11.750
710	0.016	9.306	0.397	35.720	0.017	729.866	-0.002	-0.973	274.411	11.708
720	0.016	9.308	0.397	36.117	0.017	740.146	-0.002	-0.972	273.439	11.667
730	0.016	9.309	0.397	36.514	0.017	750.426	-0.002	-0.971	272.468	11.625
740	0.016	9.310	0.397	36.911	0.017	760.706	-0.002	-0.970	271.498	11.584
750	0.016	9.311	0.397	37.309	0.017	770.985	-0.002	-0.969	270.530	11.542
760	0.014	8.350	0.356	37.665	0.017	781.265	-0.003	-1.930	268.600	11.460
770	0.012	7.389	0.315	37.980	0.017	791.545	-0.005	-2.891	265.709	11.337
780	0.012	7.390	0.315	38.296	0.017	801.825	-0.005	-2.890	262.819	11.213
790	0.012	7.390	0.315	38.611	0.017	812.105	-0.005	-2.889	259.930	11.090
800	0.012	7.391	0.315	38.926	0.017	822.384	-0.005	-2.889	257.041	10.967
810	0.012	7.392	0.315	39.242	0.017	832.664	-0.005	-2.888	254.153	10.844
820	0.012	7.392	0.315	39.557	0.017	842.944	-0.005	-2.888	251.265	10.720
830	0.012	7.393	0.315	39.872	0.017	853.224	-0.005	-2.887	248.378	10.597
840	0.012	7.394	0.315	40.188	0.017	863.504	-0.005	-2.886	245.492	10.474
850	0.012	7.394	0.315	40.503	0.017	873.783	-0.005	-2.886	242.606	10.351
860	0.012	7.395	0.316	40.819	0.017	884.063	-0.005	-2.885	239.721	10.228
870	0.012	7.395	0.316	41.134	0.017	894.343	-0.005	-2.885	236.837	10.105
880	0.012	6.934	0.296	41.430	0.017	904.623	-0.006	-3.346	233.490	9.962
890	0.011	6.472	0.276	41.706	0.017	914.903	-0.006	-3.808	229.682	9.800
900	0.011	6.472	0.276	41.982	0.017	925.182	-0.006	-3.808	225.875	9.637
910	0.011	6.473	0.276	42.259	0.017	935.462	-0.006	-3.807	222.068	9.475
920	0.011	6.473	0.276	42.535	0.017	945.742	-0.006	-3.807	218.261	9.312
930	0.011	6.473	0.276	42.811	0.017	956.022	-0.006	-3.806	214.454	9.150
940	0.011	6.474	0.276	43.087	0.017	966.302	-0.006	-3.806	210.648	8.987
950	0.011	6.474	0.276	43.363	0.017	976.581	-0.006	-3.806	206.843	8.825
960	0.011	6.474	0.276	43.640	0.017	986.861	-0.006	-3.805	203.037	8.663
970	0.011	6.475	0.276	43.916	0.017	997.141	-0.006	-3.805	199.232	8.500
980	0.011	6.475	0.276	44.192	0.017	1007.421	-0.006	-3.805	195.428	8.338
990	0.011	6.476	0.276	44.468	0.017	1017.701	-0.006	-3.804	191.623	8.176
1000	0.010	5.821	0.248	44.717	0.017	1027.981	-0.007	-4.459	187.164	7.986
1010	0.009	5.166	0.220	44.937	0.017	1038.260	-0.009	-5.114	182.050	7.767
1020	0.009	5.166	0.220	45.158	0.017	1048.540	-0.009	-5.114	176.936	7.549
1030	0.009	5.166	0.220	45.378	0.017	1058.820	-0.009	-5.114	171.822	7.331
1040	0.009	5.166	0.220	45.598	0.017	1069.100	-0.009	-5.114	166.708	7.113
1050	0.009	5.166	0.220	45.819	0.017	1079.380	-0.009	-5.113	161.595	6.895
1060	0.009	5.167	0.220	46.039	0.017	1089.659	-0.009	-5.113	156.482	6.676
1070	0.009	5.167	0.220	46.260	0.017	1099.939	-0.009	-5.113	151.369	6.458
1080	0.009	5.167	0.220	46.480	0.017	1110.219	-0.009	-5.113	146.256	6.240
1090	0.009	5.167	0.220	46.701	0.017	1120.499	-0.009	-5.113	141.143	6.022
1100	0.009	5.167	0.220	46.921	0.017	1130.779	-0.009	-5.112	136.031	5.804
1110	0.009	5.168	0.220	47.142	0.017	1141.058	-0.009	-5.112	130.919	5.586

(1)	(2)	(3)	(4)	(5)	(6)	(7)	(8)	(9)	(10)	(11)
Time	Inflow	Inflow Volume	Inflow Volume	Cumulative Inflow	Outflow	Cumulative Outflow Vol.	Inflow-outflow	Incremental Inflow-Outflow	Cumulative Inflow-Outflow	Cumulative Depth
(min)	(cfs)	(cf)	(in)	(in)	(cfs)	(cf)	(cfs)	(cf)	(cf)	(in)
1120	0.009	5.168	0.220	47.362	0.017	1151.338	-0.009	-5.112	125.807	5.368
1130	0.009	5.168	0.220	47.583	0.017	1161.618	-0.009	-5.112	120.695	5.150
1140	0.009	5.168	0.221	47.803	0.017	1171.898	-0.009	-5.112	115.583	4.931
1150	0.009	5.168	0.221	48.024	0.017	1182.178	-0.009	-5.111	110.472	4.713
1160	0.009	5.169	0.221	48.244	0.017	1192.457	-0.009	-5.111	105.361	4.495
1170	0.009	5.169	0.221	48.465	0.017	1202.737	-0.009	-5.111	100.249	4.277
1180	0.009	5.169	0.221	48.685	0.017	1213.017	-0.009	-5.111	95.138	4.059
1190	0.009	5.169	0.221	48.906	0.017	1223.297	-0.009	-5.111	90.028	3.841
1200	0.008	4.668	0.199	49.105	0.017	1233.577	-0.009	-5.612	84.416	3.602
1210	0.007	4.166	0.178	49.283	0.017	1243.856	-0.010	-6.113	78.302	3.341
1220	0.007	4.166	0.178	49.460	0.017	1254.136	-0.010	-6.113	72.189	3.080
1230	0.007	4.167	0.178	49.638	0.017	1264.416	-0.010	-6.113	66.076	2.819
1240	0.007	4.167	0.178	49.816	0.017	1274.696	-0.010	-6.113	59.962	2.558
1250	0.007	4.167	0.178	49.994	0.017	1284.976	-0.010	-6.113	53.849	2.298
1260	0.007	4.167	0.178	50.172	0.017	1295.255	-0.010	-6.113	47.736	2.037
1270	0.007	4.167	0.178	50.349	0.017	1305.535	-0.010	-6.113	41.624	1.776
1280	0.005	3.125	0.133	50.483	0.017	1315.815	-0.012	-7.155	34.469	1.471
1290	0.003	2.084	0.089	50.572	0.017	1326.095	-0.014	-8.196	26.273	1.121
1300	0.003	2.084	0.089	50.660	0.017	1336.375	-0.014	-8.196	18.077	0.771
1310	0.003	2.084	0.089	50.749	0.017	1346.654	-0.014	-8.196	9.881	0.422
1320	0.003	2.084	0.089	50.838	0.017	1356.934	-0.014	-8.196	1.684	0.072
1330	0.003	2.084	0.089	50.927	0.017	1367.214	-0.014	-8.196	0.000	0.000
1340	0.003	2.084	0.089	51.016	0.017	1377.494	-0.014	-8.196	0.000	0.000
1350	0.003	2.084	0.089	51.105	0.017	1387.774	-0.014	-8.196	0.000	0.000
1360	0.003	2.084	0.089	51.194	0.017	1398.053	-0.014	-8.196	0.000	0.000
1370	0.003	2.084	0.089	51.283	0.017	1408.333	-0.014	-8.196	0.000	0.000
1380	0.002	1.235	0.053	51.335	0.017	1418.613	-0.015	-9.045	0.000	0.000
1390	0.001	0.386	0.016	51.352	0.017	1428.893	-0.016	-9.894	0.000	0.000
1400	0.001	0.386	0.016	51.368	0.017	1439.173	-0.016	-9.894	0.000	0.000
1410	0.001	0.386	0.016	51.385	0.017	1449.453	-0.016	-9.894	0.000	0.000
1420	0.001	0.386	0.016	51.401	0.017	1459.732	-0.016	-9.894	0.000	0.000
1430	0.001	0.386	0.016	51.418	0.017	1470.012	-0.016	-9.894	0.000	0.000
1440	0.001	0.386	0.016	51.434	0.017	1480.292	-0.016	-9.894	0.000	0.000
		1206							281	12.00