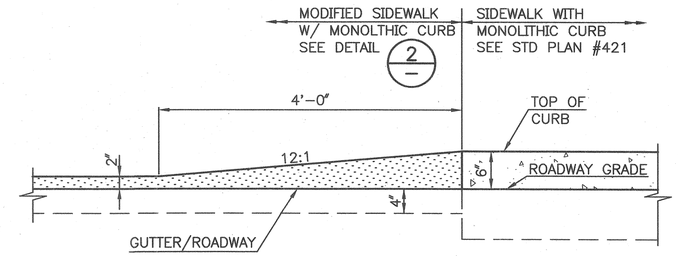

DETAIL 1/—
CURB HEIGHT TRANSITION
SCALE: 1" = 1'-0"

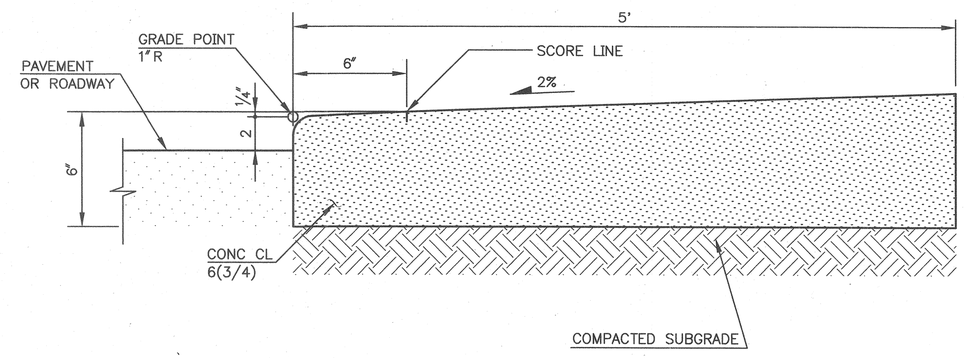

DETAIL 2/—
MODIFIED CONC WALK
W/ MONOLITHIC CURB
SCALE: 3" = 1'-0"

VAULT SERIAL NO.	DATE	MARK	NATURE REVISIONS	MADE	CHK'D	REV'D
54213						

P:\STREET\TWD9041\PAVDETAILS.DWG

City of Seattle
Seattle Department of Transportation

APPROVED FOR ADVERTISING
KENNETH J. NAKATSU
DEPARTMENT OF EXECUTIVE ADMINISTRATION
SEATTLE, WASHINGTON 20

BY:
DIRECTOR, CONTRACTING SERVICES

NAME OR INITIALS AND DATE
DESIGNED
CHECKED 5/20/03
DRAWN
CHECKED

INITIALS AND DATE
REVIEWED:
DES. CONST.
SDOT PROJ. MGR.
RECEIVED
REVISED AS BUILT

ALL WORK DONE IN ACCORDANCE WITH THE CITY OF SEATTLE STANDARD PLANS AND SPECIFICATIONS AND OTHER DOCUMENTS CALLED FOR IN SECTION 0-02.3 OF THE PROJECT MANUAL.

MICHAEL C. JOHNS
STATE OF WASHINGTON
34616
REGISTERED PROFESSIONAL ENGINEER
5/20/03
EXPIRES 03/19/2004

Seattle Public Utilities
City of Seattle
Chuck Clarke, Director

ORDINANCE NO. APPROVED
FUND:
SCALE: AS NOTED INSPECTOR'S BOOK

PAVING DETAILS

BROADVIEW GREEN GRID
4TH AVE NW TO PHINNEY AVE N

JOB NO. PC C300329
R/W
CO C300329
VAULT PLAN NO. 777-580
SHEET 57 OF 59

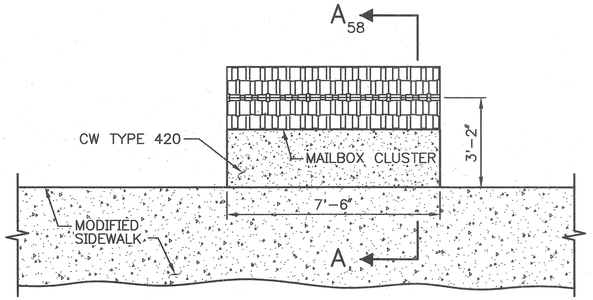

PLAN
SCALE: 3/8" = 1'-0"

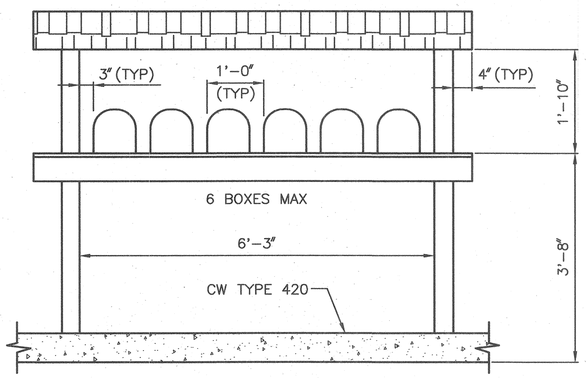

ELEVATION
SCALE: 3/4" = 1'-0"

CLUSTER MAILBOX 1 / 23,30,36,43

NOTE:

1. FOR MAILBOX CLUSTER LOCATION SEE PAVING PLAN SHEETS.
2. WOOD POSTS SHALL BE PRESSURE TREATED FIR OR HEMLOCK.

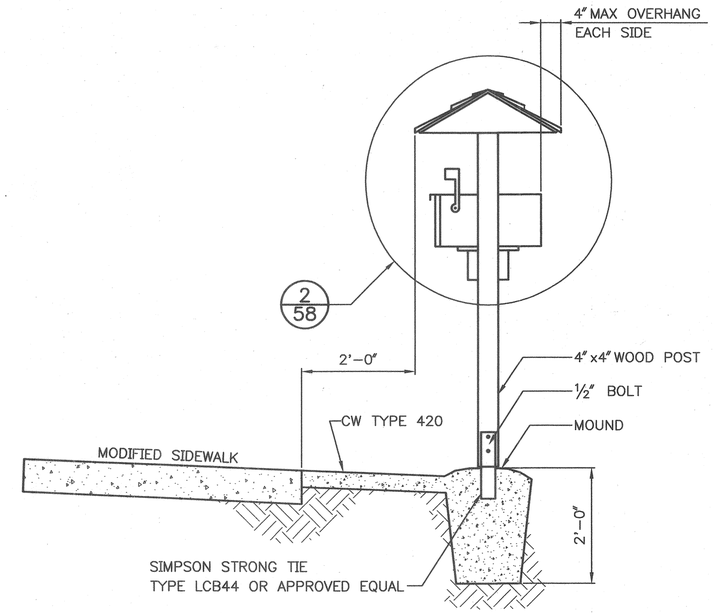

SECTION A-A 58
SCALE: 3/4" = 1'-0"

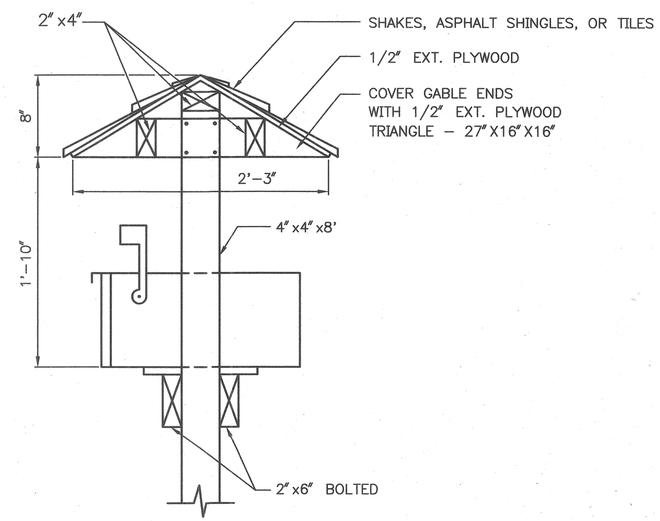

DETAIL 2 / 58
SCALE: 1 1/2" = 1'-0"

MAILBOX DETAILS

VAULT SERIAL NO.	DATE	MARK	NATURE REVISIONS	MADE	CHK'D	REV'D
34213						

APPROVED FOR ADVERTISING
KENNETH J. NAKATSU
DEPARTMENT OF EXECUTIVE ADMINISTRATION
SEATTLE, WASHINGTON 20
BY:
DIRECTOR, CONTRACTING SERVICES

NAME OR INITIALS AND DATE
DESIGNED
CHECKED 5/22/03
DRAWN JCJ
CHECKED LMJT

INITIALS AND DATE
REVIEWED:
DES. CONST.
SDOT PROJ. MGR.
RECEIVED
REVISED AS BUILT

ALL WORK DONE IN ACCORDANCE WITH THE CITY OF SEATTLE STANDARD PLANS AND SPECIFICATIONS AND OTHER DOCUMENTS CALLED FOR IN SECTIN 0-02.3 OF THE PROJECT MANUAL.

GLENN K. HASEGAWA
STATE OF WASHINGTON
20158
REGISTERED PROFESSIONAL ENGINEER
EXPIRES 06-17-2004

Seattle Public Utilities
City of Seattle
Chuck Clarke, Director
ORDINANCE NO.
FUND:
SCALE: AS SHOWN
APPROVED
INSPECTOR'S BOOK

BROADVIEW GREEN GRID
4TH AVE NW TO PHINNEY AVE N

JOB NO. PC C300329
R/W
CO C300329
VAULT PLAN NO. 777-580
SHEET 58 OF 59