REV DATE: FEB 2016

COND	Condition
CONN	Connect/Connection
CONSTR	Construction
CONT	Continuous
CORP	Corporation
COS	City of Seattle
CPEP	Corrugated Polyethylene Pipe
CR	Cross, Curb Radius
CSB	Chief Seattle Base
CULV	Culvert
CW	Concrete Walk
CY	Cubic Yard
DB	Direct Burial Cable
DC	Direct Current
DCVA	Double Check Valve Assembly
DEPT	Department
DGV	District Gate Valve
DIA Ø	Diameter
DIP or DI	Ductile Iron Pipe
DIPRA	Ductile Iron Pipe Research Assoc.
DR	Drive
DS	Downspout
DWG	Drawing
DWY	Driveway
E	East
EA	Each
ECB	Electrical Cable
ECC	Eccentric
ECD	Electrical Conduit
ED	Electrical Duct
EL/ELEV	Elevation
ELEC	Electric/Electrical
EMH	Electrical Maintenance Hole

ENCL	Enclosure
ENGR	Engineer
EOC	End of Curb
EQ	Equal
ESAL	Equivalent Single Axle Loads
ESMT	Easement
EV	Electrical Vault
EVC	End of Vertical Curb
EW	Each Way
EX	Existing
EXP	Expansion
FACB	Fire Alarm Cable
FAHH	Fire Alarm Handhole
FC	Face of Curb
FCS	Flow Control Structure
FDN	Foundation
FF	Far Face, Finished Floor
FG	Finished Grade
FIG	Figure
FIPT	Female Iron Pipe Thread
FL	Flow Line
FLG	Flange
FLR	Floor
FLT	Flat Bar
FM	Force Main
FO or FOC	Fiber Optics
FS	Far Side
FT	Feet
FTB	Fluidized Thermal Backfill
FTG	Footing
G	Gas
G REG	Gas Regulator
GA	Gauge

REF STD SPEC SEC 1-01.2

City of Seattle | NOT TO SCALE | ABBREVIATIONS

MCV	Manual Control Valve
MDV	Manual Drain Valve
MH	Maintenance Hole
MIC	Monument in Case
MIN	Minimum
MIPT	Male Iron Pipe Thread
MISC	Miscellaneous
MJ	Mechanical Joint
ML ℳ	Monument Line
MNRL AGG	Mineral Aggregate
MOD	Modify/Modified
MON	Monument
MW	Monitor Well
N	North
NAD	North American Datum
NAVD	North American Vertical Datum
NF	Near Face
NGVD	National Geodetic Vertical Datum
NIC	Not in Contract
NO	Number
NOM	Nominal
NS	Near Side
NTS	Not To Scale
OC	On Center
OD	Outside Diameter/Dimension
OF	Outside Face
OH	Overhead
PAV	Pavement
PC	Point of Curvature
PCC	Point of Compound Curve
PCW	Pervious Concrete Walk
PDP	Perforated Drain Pipe
PE	Plain End

PED	Pedestrian
PG	Performance Grade
PH	Phase
PI	Point of Intersection
PL	Plate, Place, Polyethylene
ℙ	Property Line
POC	Point on Curve
PP	Power Pole
PPB	Pedestrian Push Button
PR	Pair
PRC	Point of Reverse Curve
PROP	Proposed
PRKG	Parking
PRV	Pressure Reducing Valve
PS	Pipe Sewer Combined
PSD	Pipe Storm Drain
PSDD	Pipe Storm Drain Detention
PSI	Pounds per Square Inch
PSIA	Pounds per Square Inch Absolute
PSIG	Pounds per Square Inch Gauge
PSS	Pipe Sewer Sanitary
PT	Point of Tangency
PVB	Pressure Vacuum Breaker
PVC	Polyvinyl Chloride
PVT	Private
QTY	Quantity
R	Radius
R&R	Remove & Replace
R/W	Right of Way
RCP	Reinforced Concrete Pipe
RD	Roof Drain
RDWY	Roadway
RECONN	Reconnect

REF STD SPEC SEC 1-01.2

REV DATE: FEB 2016

TJO	Transfer of Jurisdiction Ordinance
TMH	Telephone Manhole
TMT	Treatment
TN	Ton
TOC	Top of Curb
TR	Traffic
TRCB	Traffic Signal Cable
TRCD	Traffic Signal Conduit
TRSCC	Traffic Signal Controller Cabinet
TVCB	Television Cable
TVCD	Television Conduit
TVHH	Television Handhole
TYP	Typical
UG	Underground
UIC	Underground Interconnect
UNC	Unified National Course
UP	Utility Pole
V	Valve, Variable
V/C	Vertical Curve
VAR	Variable/Varies
VB	Vertical Bend
VBOX	Valve Box
VCH or VC	Valve Chamber
VCP	Vitrified Clay Pipe
VEH	Vehicle
VERT	Vertical
VMS	Variable Message Sign
VO	Vacation Ordinance
W	Water, West
W/	With
WCR	Walkway Curb Ramp
WD	Wood/Wooden
WF	Wood Fence

WIF	Wrought Iron Fence
WM	Water Meter, Water Main
WMA	Warm Mix Asphalt
WMR	Water Main Radius
WP	Wood Pole
WS	Water Service
WSP	Wood Stave Pipe
WU	Western Union
WV	Water Valve
WWF	Welded Wire Fabric
XP	Transmission Pole

REF STD SPEC SEC 1-01.2

City of Seattle | NOT TO SCALE | ABBREVIATIONS

REV DATE: FEB 2016

ITEM	EXISTING	PROPOSED
Cement Concrete Pavement	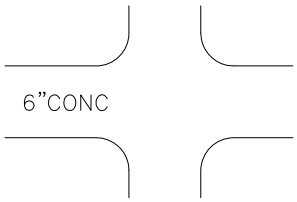	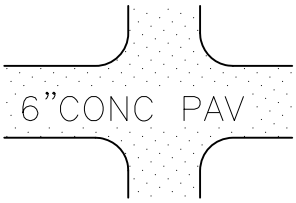
Asphalt Concrete Pavement	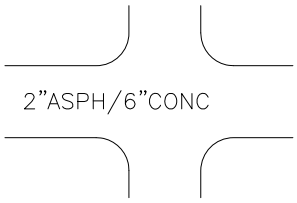	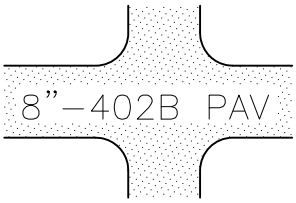
Asphalt Concrete Surfacing	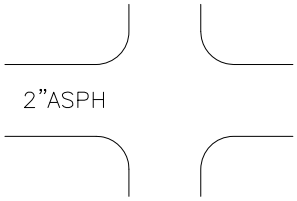	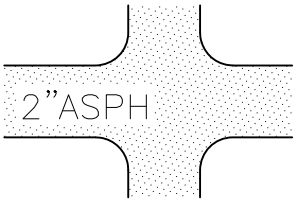
Curb		TYPE 410C CURB
Cement Concrete Walk	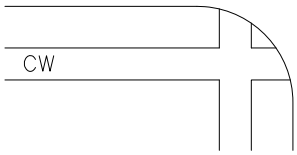	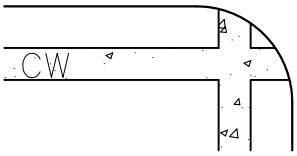
Pervious Concrete Walk		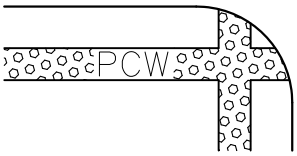

REF STD SPEC SEC

City of Seattle	NOT TO SCALE	STANDARD SYMBOLS PAVING

REV DATE: FEB 2016

ITEM	EXISTING	PROPOSED
Curb Ramp	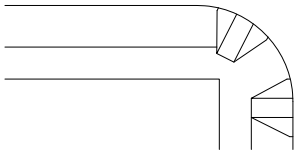	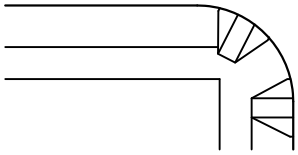
Conc Dwy	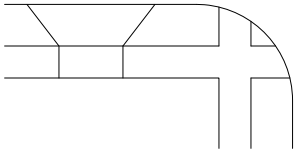	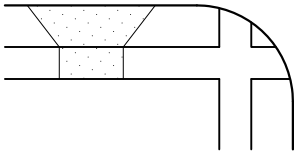
Pervious Concrete Surface		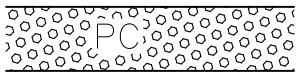
Cement Concrete Bike Way		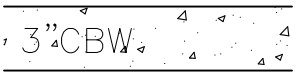
Asphalt Concrete Bike Way		
Grading	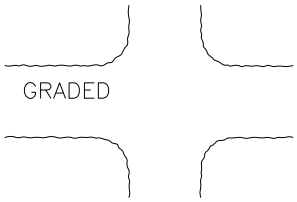	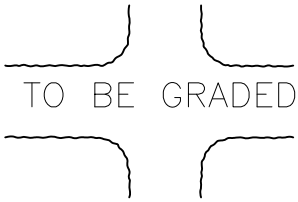

REF STD SPEC SEC

City of Seattle	NOT TO SCALE	STANDARD SYMBOLS PAVING

ITEM	EXISTING	PROPOSED
Maintenance Holes		MH-7
Inlet Type 250A		
Inlet Type 250B		
Inlet Type 252		
Inlet Type 268		
Catch Basin round inlet top		
Private CB & Inlet		
Catch Basin Type 151 (pre 1985)		
Catch Basin Type 240A	A	A
Catch Basin Type 240B	B	B
Catch Basin Type 240C	C	C
Catch Basin Type 240D	D	D
Catch Basin Type 241		
Catch Basin Type 242A		
Catch Basin Type 242B		
Junction Box Type 277A		
Junction Box Type 277B		
Area Drain		

REF STD SPEC SEC

City of Seattle

NOT TO SCALE

STANDARD SYMBOLS
SEWER & DRAINAGE

REV DATE: NOV 2015

ITEM	EXISTING	PROPOSED
Sand Box		
Clean Out		
Concrete Culvert	12″ CC	12″ CC
Pipe Sewer Combined <1'-0"Dia	8″ PS	8″ PS
Pipe Sewer Combined ≥1'-0"Dia	24″ PS	24″ PS
Side Sewer Combined	6″ SS	6″ SS
Pipe Sewer Sanitary <1'-0"Dia	8″ PSS	8″ PSS
Pipe Sewer Sanitary ≥1'-0"Dia	24″ PSS	24″ PSS
Side Sewer Sanitary	6″ SSS	6″ SSS
Pipe Storm Drain <1'-0"Dia	8″ PSD	8″ PSD
Pipe Storm Drain ≥1'-0"Dia	24″ PSD	24″ PSD

REF STD SPEC SEC

City of Seattle | NOT TO SCALE | STANDARD SYMBOLS SEWER & DRAINAGE

REV DATE: NOV 2015

ITEM	EXISTING	PROPOSED
Service Drain	8" SD	8" SD
Inlet & CB Connection		8"
Open Ended Pipe	8" PSD	8" PSD
Ditch		
Stream		

REF STD SPEC SEC

City of Seattle	NOT TO SCALE	STANDARD SYMBOLS SEWER & DRAINAGE

ITEM	EXISTING	PROPOSED
Bench Mark (found or set)		
Brass Plug/Cap (found or set)		
Hub/Tack (found or set)		
Monument in Case (found or set)		
Conc. Mon. (found or set)		
Section Corner (found or set)		
Quarter Corner (found or set)		
Section Corner (calculated)		
Quarter Corner (calculated)		
Rebar/Cap, Pipe/Cap Rebar, Iron Pipe (found or set)		
Tack/Lead, Tack PK Nail, Spike (found or set)		
Bench Mark (not found)		
Brass Plug/Cap (not found)		
MIC. (not found)		
Conc. Mon. (not found)		
Rebar/Cap, Pipe/Cap Rebar, Iron Pipe (not found)		
Tack/Lead, Tack PK Nail, Spike (not found)		
Survey Shot Point		

REF STD SPEC SEC

City of Seattle	NOT TO SCALE	STANDARD SYMBOLS TOPOGRAPHIC & MISC

REV DATE: NOV 2015

ITEM	EXISTING	PROPOSED
Center Line	CL	
Monument Line	ML	
Survey Line	SL	
Right of Way Line		
Lot & Ownership Line		
Permanent Easement Line		
Temp Const Easement Line		
Vacated Street or Alley		
State Highway Limited Access Line	STATE LAL	
Building		
Chain Link Fence		
Wood Fence		
Guardrail		
Rock Facing		
Rock Facing		
Riprap		
Trees	16"TREE 16"TREE	PER DRAWINGS

REF STD SPEC SEC

City of Seattle | NOT TO SCALE | STANDARD SYMBOLS TOPOGRAPHIC & MISC

REV DATE: NOV 2015

ITEM	EXISTING	PROPOSED
Shrub or Bush		
Ground, Grade Line		
Grade (arrow downhill)	5.6%	5.6%
Rail Road Tracks		
City Limits	CITY OF SEATTLE KING COUNTY	
Slope Line		SLOPE LINE
Contours	246	246
Slope Angle Horiz:Vert		H:V
Vertical Curve	V C	V C
Depression		
Stump		
Top of Cut Toe of Fill		TOP OF CUT TOE OF FILL
Dimension Line		
Match Line		
Test Hole & Number (test boring)	(TB) TH-7	(TB) TH-7
Bench Mark	BM	

REF STD SPEC SEC

City of Seattle	NOT TO SCALE	STANDARD SYMBOLS TOPOGRAPHIC & MISC

REV DATE: NOV 2015

ITEM	EXISTING	PROPOSED
Monitor Well	MW	
Street Name Sign		
US Mail Box	US	
Private Mail Box		
Bollard		
Posts		
Parking Meter & Pay Station		
Rectangular Casting		
Circular Casting		
Column		
Jersey Barrier & Eco Block		
Tree Pit		
North Arrow horizontal	N	
North Arrow vertical	N	

REF STD SPEC SEC

City of Seattle	NOT TO SCALE	STANDARD SYMBOLS TOPOGRAPHIC & MISC

REV DATE: NOV 2015

ITEM	EXISTING	PROPOSED
Telephone Cable (direct burial)	TCB	
Telephone Conduit	3"TCD	
Telephone Duct	12'X12"TD	
Telephone Enclosure	TEB	
Telephone Maintenance Hole	TEL VAULT	
Telephone Pole	TP	
Telephone Handhole	THH	
Television Cable (direct Burial)	TVCB	
Television Handhole	TVHH	
Telegraph Maintenance Hole	TELEG MH	
Steam Log	6"STM 14"X14"LOG	
Steam Vault	STEMV	
Gas Main	12"G	
Gas Valve		
Gas Meter	GM	
Gas Regulator	G REG	
Petroleum or Oil	OIL	
Abandon(ed)	2"ECD(ABAN)	2"ECD–ABAN

REF STD SPEC SEC

City of Seattle	NOT TO SCALE	STANDARD SYMBOLS PRIVATE UTILITIES

REV DATE: NOV 2015

ITEM	EXISTING	PROPOSED
Watermain <1'-0"Dia	8"W	8"W
Watermain ≥1'-0"Dia	24"W	36"W
11 1/4° Bend w/ Conc Blocking		8"–11 1/4°HBorVB
22 1/2° Bend		8"–22 1/2°HBorVB
45° Bend		8"–45°HBorVB
90° Bend		8"–90°HBorVB
Cross		8"X8"X6"X6"CR
Tee		8"X8"X6"T
Pipe Sleeve		
Plug w/ Conc Blocking		or
Hydrant		
Water Meter	WM	WM
Valve Box		
Gate Valve		4"GV W/VBOX
Gate Valve w/ Chamber		8"GV W/CH
Gate Valve w/ Vault Chamber		16"GV W/VCH
Reducer	8"W 4"W	8"X4"RED

REF STD SPEC SEC

City of Seattle	NOT TO SCALE	STANDARD SYMBOLS WATER

REV DATE: NOV 2015

ITEM	EXISTING	PROPOSED
Air Valve		
Blowoff		1½"BO
Fire Standpipe		
Water Test Station		
Water Chamber		
Sprinkler Head		
Irrigation Valve	IRRV	IRRV
Angle Valve		
Butterfly Valve		
Ball Valve		
Check Valve		
Cone Valve		
Globe Valve		
Needle Valve		
Plug Valve		
Resilient Seal Gate Valve		
Vertical Bend		
Concrete Blocking		

REF STD SPEC SEC

City of Seattle	NOT TO SCALE	STANDARD SYMBOLS WATER

REV DATE: FEB 2016

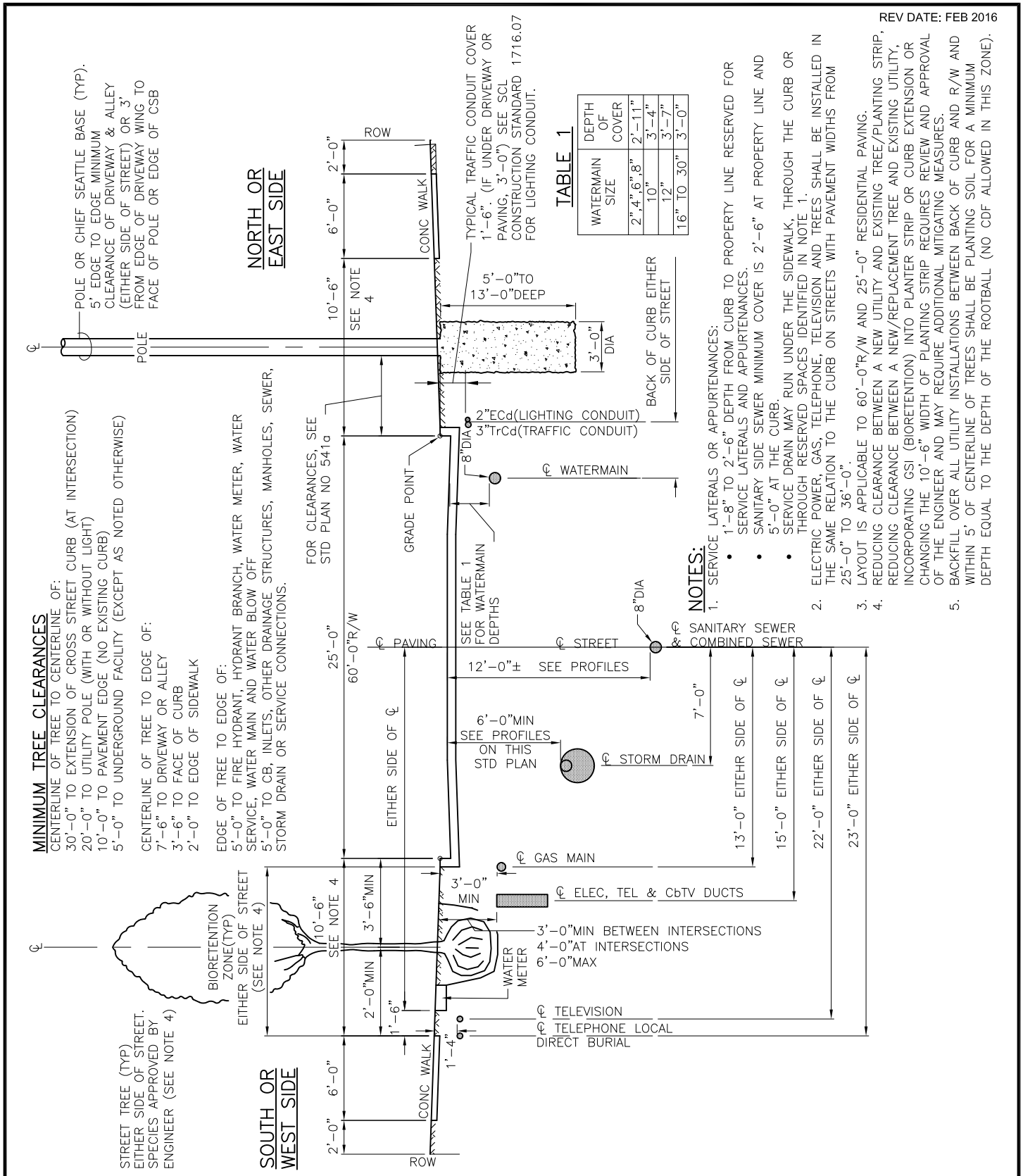

TABLE 1

WATERMAIN SIZE	DEPTH OF COVER
2",4",6",8"	2'-11"
10"	3'-4"
12"	3'-7"
16" TO 30"	3'-0"

MINIMUM TREE CLEARANCES

CENTERLINE OF TREE TO CENTERLINE OF:
30'-0" TO EXTENSION OF CROSS STREET CURB (AT INTERSECTION)
20'-0" TO UTILITY POLE (WITH OR WITHOUT LIGHT)
10'-0" TO PAVEMENT EDGE (NO EXISTING CURB)
5'-0" TO UNDERGROUND FACILITY (EXCEPT AS NOTED OTHERWISE)

CENTERLINE OF TREE TO EDGE OF:
7'-6" TO DRIVEWAY OR ALLEY
3'-6" TO FACE OF CURB
2'-0" TO EDGE OF SIDEWALK

EDGE OF TREE TO EDGE OF:
5'-0" TO FIRE HYDRANT, HYDRANT BRANCH, WATER METER, WATER SERVICE, WATER MAIN AND WATER BLOW OFF
5'-0" TO CB, INLETS, OTHER DRAINAGE STRUCTURES, MANHOLES, SEWER, STORM DRAIN OR SERVICE CONNECTIONS.

NOTES:

1. SERVICE LATERALS OR APPURTENANCES:
   - 1'-8" TO 2'-6" DEPTH FROM CURB TO PROPERTY LINE RESERVED FOR SERVICE LATERALS AND APPURTENANCES.
   - SANITARY SIDE SEWER MINIMUM COVER IS 2'-6" AT PROPERTY LINE AND 5'-0" AT THE CURB.
   - SERVICE DRAIN MAY RUN UNDER THE SIDEWALK, THROUGH THE CURB OR THROUGH RESERVED SPACES IDENTIFIED IN NOTE 1.
2. ELECTRIC POWER, GAS, TELEPHONE, TELEVISION AND TREES SHALL BE INSTALLED IN THE SAME RELATION TO THE CURB ON STREETS WITH PAVEMENT WIDTHS FROM 25'-0" TO 36'-0".
3. LAYOUT IS APPLICABLE TO 60'-0"R/W AND 25'-0" RESIDENTIAL PAVING.
4. REDUCING CLEARANCE BETWEEN A NEW UTILITY AND EXISTING TREE/PLANTING STRIP, REDUCING CLEARANCE BETWEEN A NEW/REPLACEMENT TREE AND EXISTING UTILITY, INCORPORATING GSI (BIORETENTION) INTO PLANTER STRIP OR CURB EXTENSION OR CHANGING THE 10'-6" WIDTH OF PLANTING STRIP REQUIRES REVIEW AND APPROVAL OF THE ENGINEER AND MAY REQUIRE ADDITIONAL MITIGATING MEASURES.
5. BACKFILL OVER ALL UTILITY INSTALLATIONS BETWEEN BACK OF CURB AND R/W AND WITHIN 5' OF CENTERLINE OF TREES SHALL BE PLANTING SOIL FOR A MINIMUM DEPTH EQUAL TO THE DEPTH OF THE ROOTBALL (NO CDF ALLOWED IN THIS ZONE).

REF STD SPEC SEC 1-07.16, 1-07.17 & 1-07.28

City of Seattle	NOT TO SCALE	DESIRABLE LOCATIONS FOR UTILITIES (RESIDENTIAL STREET)

REV DATE: FEB 2016

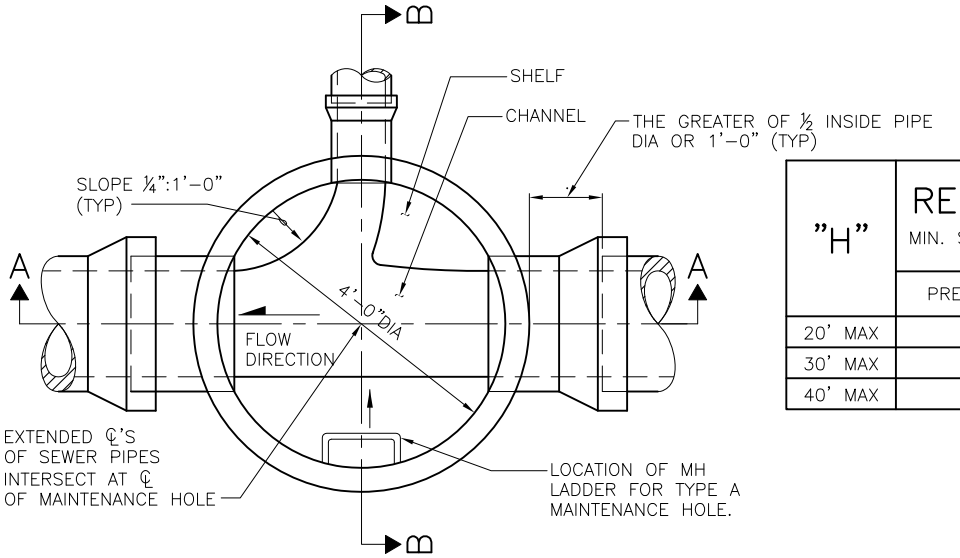

PLAN VIEW
(TOP REMOVED)

"H"	REINFORCING STEEL "A" MIN. SQ IN/FT, TOP FACE, IN EACH DIRECTION	
	PRECAST BASE	CAST–IN–PLACE BASE
20' MAX	0.25	0.17
30' MAX	0.31	0.22
40' MAX	0.36	0.25

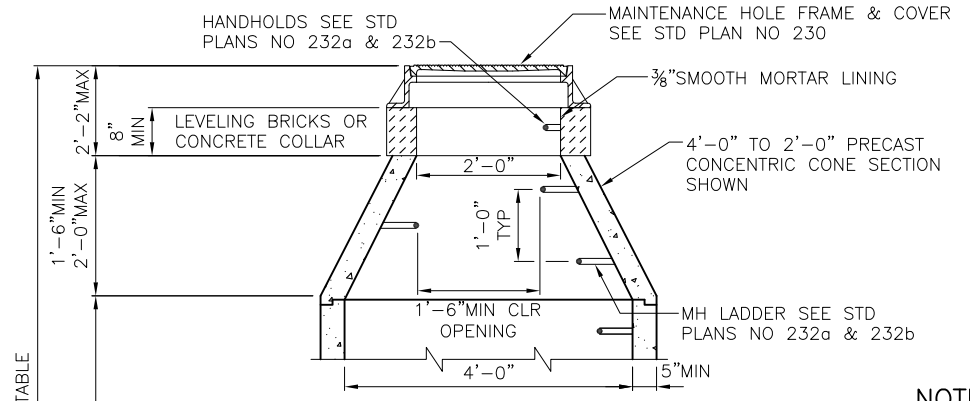

SECTION B–B

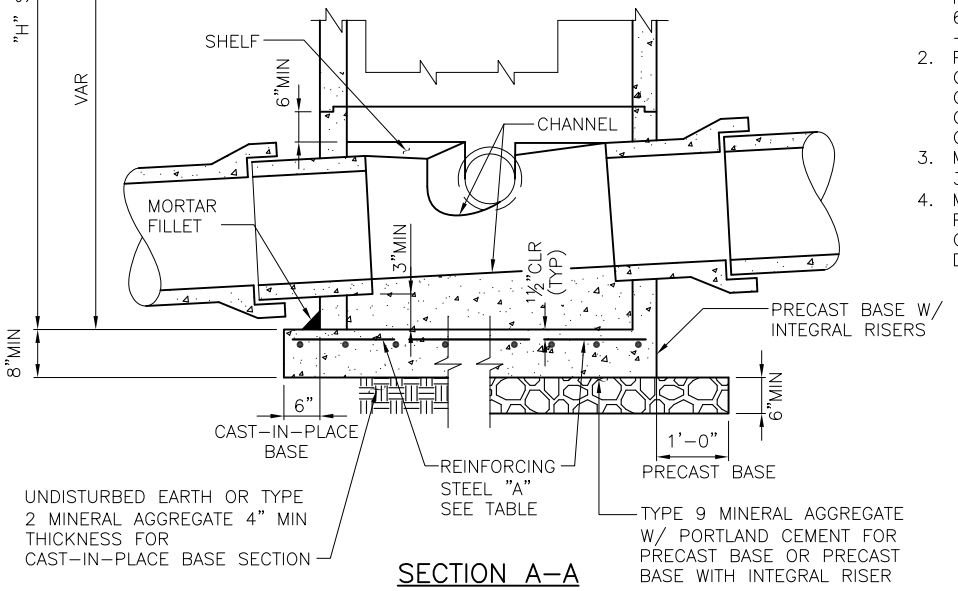

SECTION A–A

NOTES:

1. MATERIALS: CONCRETE–CLASS 4000; REINFORCING STEEL–ASTM A615 GRADE 60 MIN; CHANNEL AND SHELF MATERIAL – CONCRETE CLASS 3000.
2. PRECAST MAINTENANCE HOLE COMPONENTS SHALL CONFORM TO ASTM C 478. JOINTS BETWEEN PRECAST COMPONENTS SHALL BE RUBBER GASKETED CONFORMING TO ASTM C 443.
3. MINIMUM REQUIRED SOIL BEARING = 3,000 LBS/SQ FT
4. MAX HOLE SIZE SHALL BE OD OF PIPE PLUS 5 IN. MIN HOLE SIZE SHALL BE OD OF PIPE PLUS 3 IN. MIN CLEAR DISTANCE BETWEEN HOLES IS 8 IN.

REF STD SPEC SEC 7-05

City of Seattle	NOT TO SCALE	TYPE 204a MAINTENANCE HOLE

REV DATE: NOV 2014

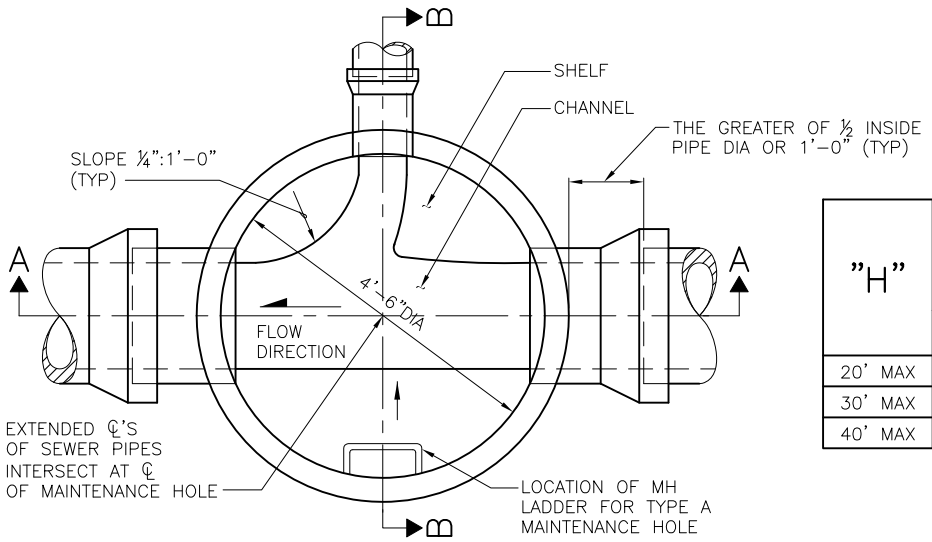

PLAN VIEW
(TOP REMOVED)

"H"	REINFORCING STEEL "A" MIN. SQ IN/FT, TOP FACE, IN EACH DIRECTION	
	PRECAST BASE	CAST–IN–PLACE BASE
20' MAX	0.29	0.21
30' MAX	0.36	0.26
40' MAX	0.42	0.31

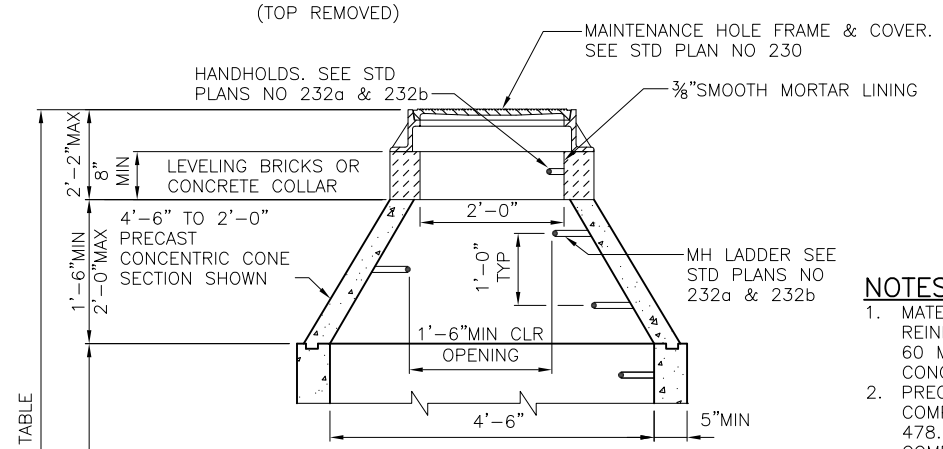

SECTION B–B

NOTES:

1. MATERIALS: CONCRETE–CLASS 4000; REINFORCING STEEL–ASTM A615 GRADE 60 MIN; CHANNEL AND SHELF MATERIAL – CONCRETE CLASS 3000.
2. PRECAST MAINTENANCE HOLE COMPONENTS SHALL CONFORM TO ASTM C 478. JOINTS BETWEEN PRECAST COMPONENTS SHALL BE RUBBER GASKETED CONFORMING TO ASTM C 443.
3. MINIMUM REQUIRED SOIL BEARING = 3,000 LBS/SQ FT
4. MAX HOLE SIZE SHALL BE OD OF PIPE PLUS 6 IN. MIN HOLE SIZE SHALL BE OD OF PIPE PLUS 3 IN. MIN CLEAR DISTANCE BETWEEN HOLES IS 8 IN.

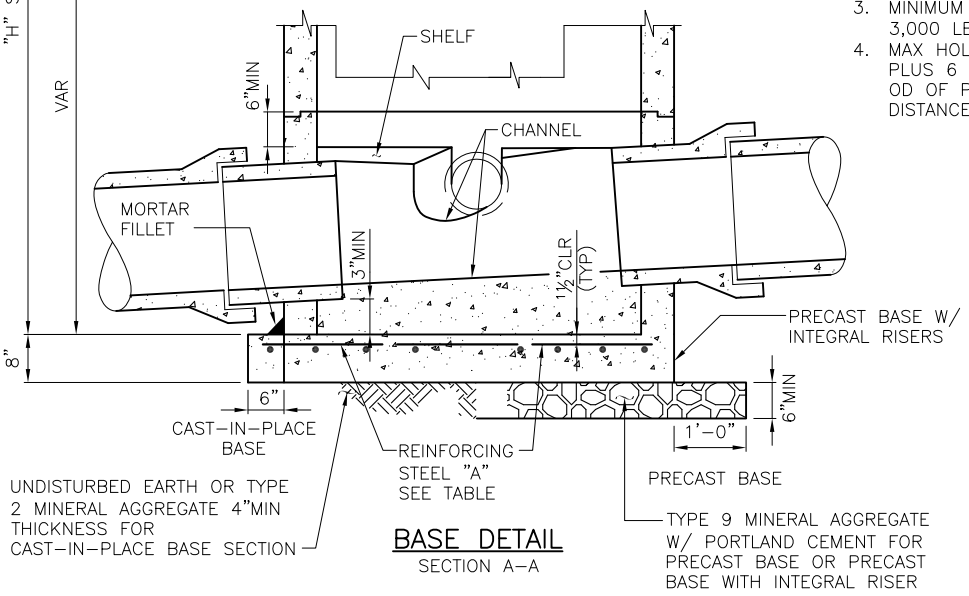

BASE DETAIL
SECTION A–A

REF STD SPEC SEC 7-05

City of Seattle	NOT TO SCALE	TYPE 204.5a MAINTENANCE HOLE

REV DATE: AUG 2015

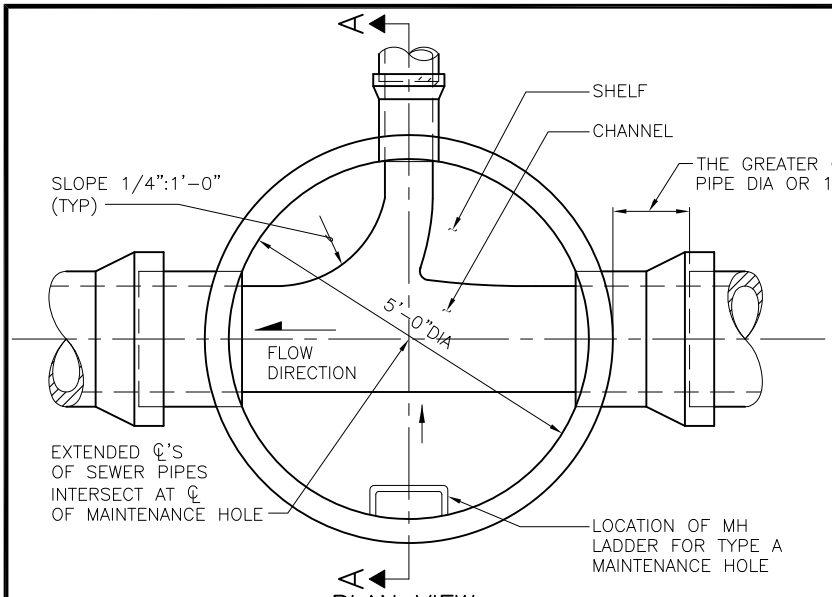

PLAN VIEW
(TOP REMOVED)

"H"	REINFORCING STEEL "A" MIN. SQ IN/FT, TOP FACE, IN EACH DIRECTION	
	PRECAST BASE	CAST–IN–PLACE BASE
20' MAX	0.33	0.25
30' MAX	0.41	0.31
40' MAX	0.49	0.37

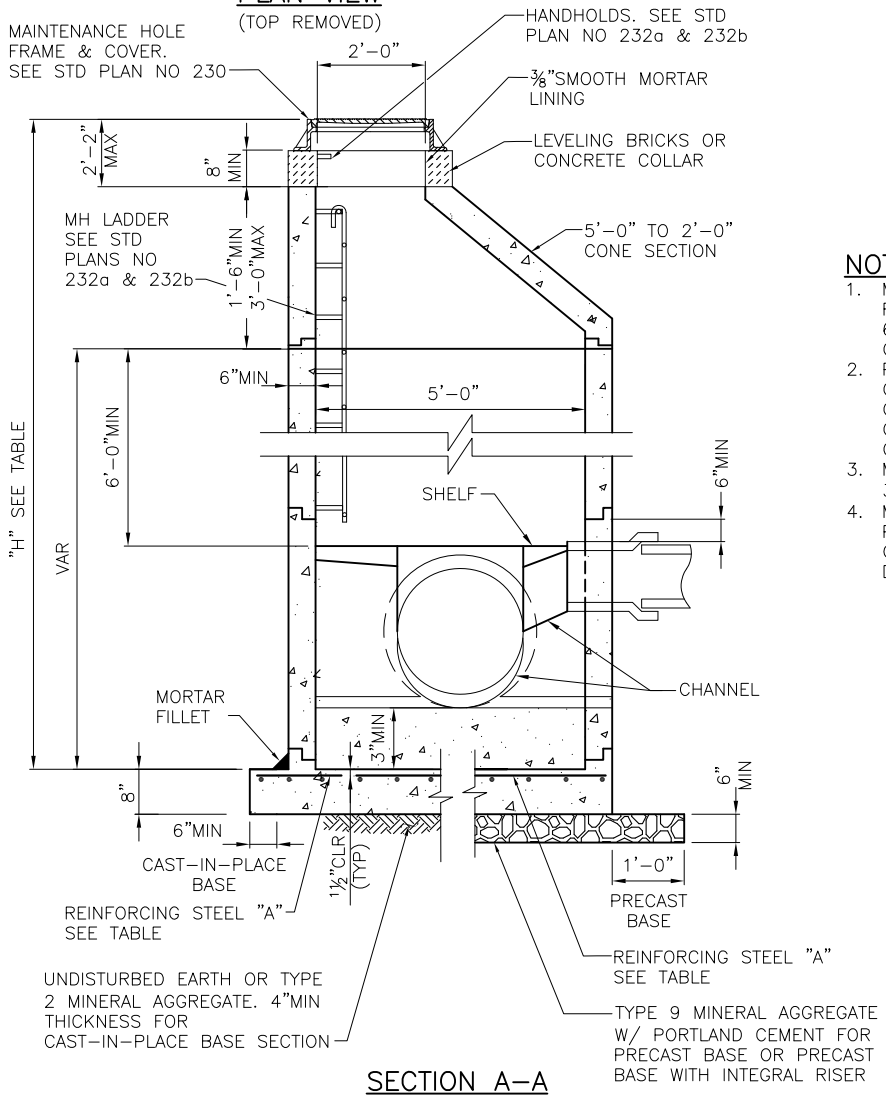

SECTION A–A

NOTES:

1. MATERIALS: CONCRETE–CLASS 4000; REINFORCING STEEL–ASTM A615 GRADE 60 MIN; CHANNEL AND SHELF MATERIAL – CONCRETE CLASS 3000.
2. PRECAST MAINTENANCE HOLE COMPONENTS SHALL CONFORM TO ASTM C 478. JOINTS BETWEEN PRECAST COMPONENTS SHALL BE RUBBER GASKETED CONFORMING TO ASTM C 443.
3. MINIMUM REQUIRED SOIL BEARING = 3,000 LBS/SQ FT
4. MAX HOLE SIZE SHALL BE OD OF PIPE PLUS 6 IN. MIN HOLE SIZE SHALL BE OD OF PIPE PLUS 3 IN. MIN CLEAR DISTANCE BETWEEN HOLES IS 8 IN.

REF STD SPEC SEC 7-05

City of Seattle	NOT TO SCALE	TYPE 205a MAINTENANCE HOLE

REV DATE: AUG 2015

"H"	REINFORCING STEEL "A" MIN. SQ IN/FT, TOP FACE, IN EACH DIRECTION	
	PRECAST BASE	CAST-IN-PLACE BASE
20' MAX	0.39	0.30
30' MAX	0.47	0.37
40' MAX	0.56	0.46

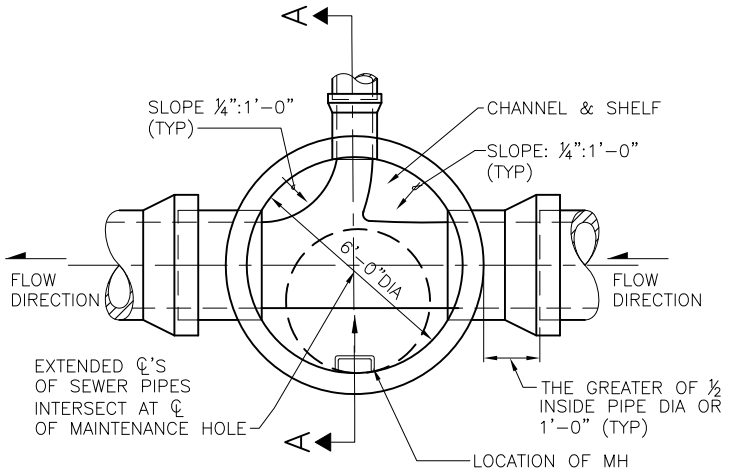

PLAN VIEW
(TOP REMOVED)

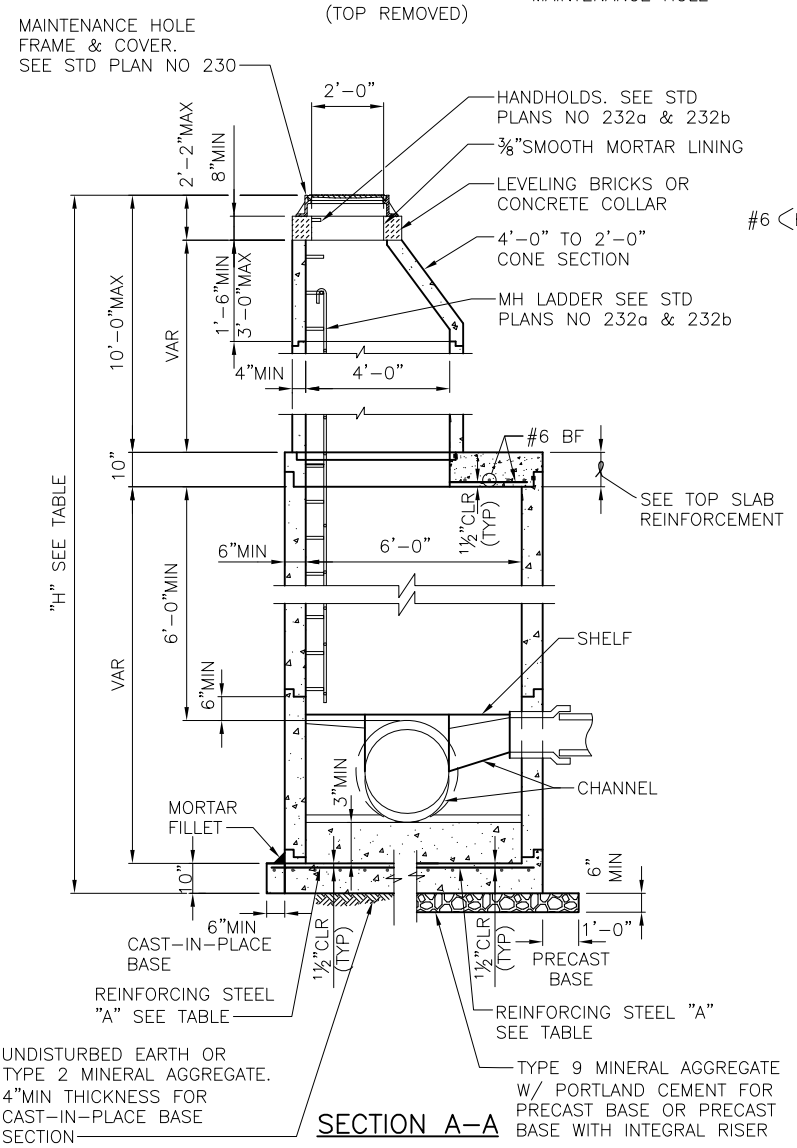

SECTION A–A

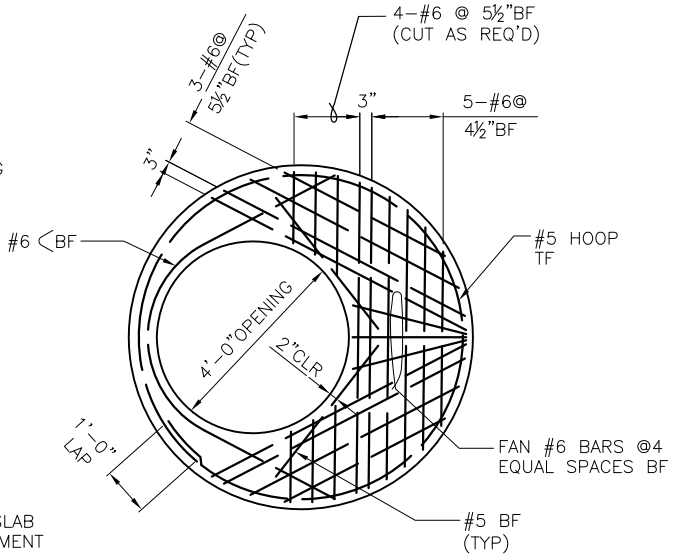

TOP SLAB REINFORCEMENT

NOTES:

1. MATERIALS: CONCRETE–CLASS 4000; REINFORCING STEEL–ASTM A615 GRADE 60 MIN; CHANNEL AND SHELF MATERIAL – CONCRETE CLASS 3000.
2. PRECAST MAINTENANCE HOLE COMPONENTS SHALL CONFORM TO ASTM C 478. JOINTS BETWEEN PRECAST COMPONENTS SHALL BE RUBBER GASKETED CONFORMING TO ASTM C 443.
3. MINIMUM REQUIRED SOIL BEARING = 3,000 LBS/SQ FT
4. MAX HOLE SIZE SHALL BE OD OF PIPE PLUS 7 IN. MIN HOLE SIZE SHALL BE OD OF PIPE PLUS 3 IN. MIN CLEAR DISTANCE BETWEEN HOLES IS 12 IN.

REF STD SPEC SEC 7-05

City of Seattle	NOT TO SCALE	TYPE 206a MAINTENANCE HOLE

REV DATE: AUG 2015

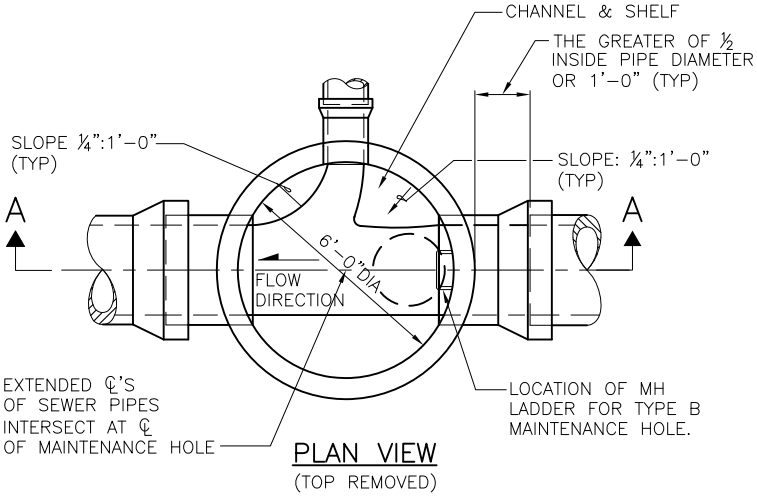

PLAN VIEW
(TOP REMOVED)

"H"	REINFORCING STEEL "A" MIN. SQ IN/FT, TOP FACE, IN EACH DIRECTION	
	PRECAST BASE	CAST–IN–PLACE BASE
20' MAX	0.29	0.24
30' MAX	0.41	0.32
40' MAX	0.49	0.41

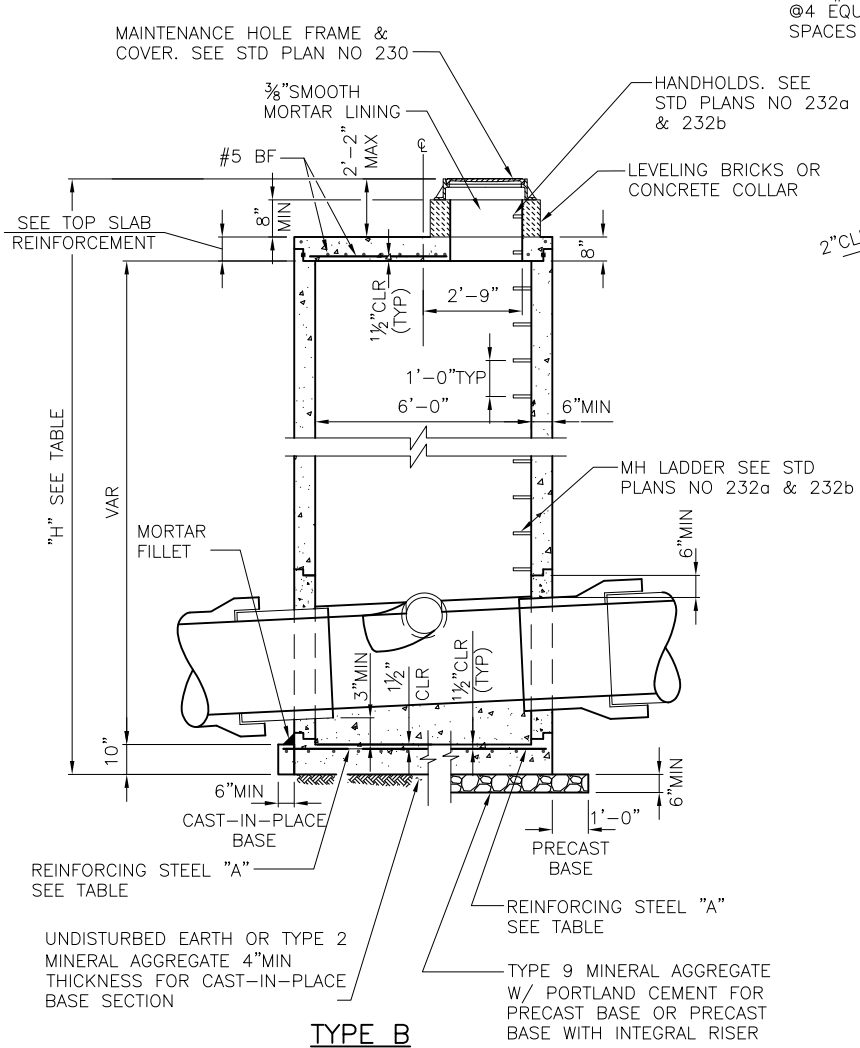

TYPE B
SECTION A–A

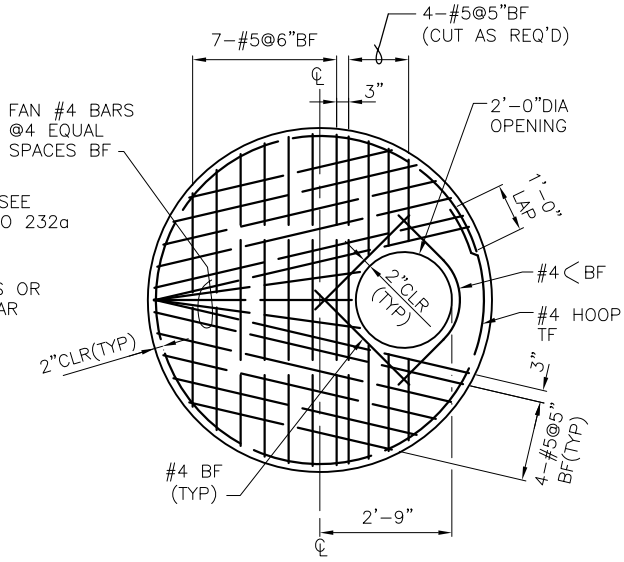

TOP SLAB REINFORCEMENT

NOTES:

1. MATERIALS: CONCRETE–CLASS 4000; REINFORCING STEEL–ASTM A615 GRADE 60 MIN; CHANNEL AND SHELF MATERIAL – CONCRETE CLASS 3000.
2. PRECAST MAINTENANCE HOLE COMPONENTS SHALL CONFORM TO ASTM C 478. JOINTS BETWEEN PRECAST COMPONENTS SHALL BE RUBBER GASKETED CONFORMING TO ASTM C 443.
3. MINIMUM REQUIRED SOIL BEARING = 3,000 LBS/SQ FT
4. MAX HOLE SIZE SHALL BE OD OF PIPE PLUS 7 IN. MIN HOLE SIZE SHALL BE OD OF PIPE PLUS 3 IN. MIN CLEAR DISTANCE BETWEEN HOLES IS 12 IN.

REF STD SPEC SEC 7-05

City of Seattle	NOT TO SCALE	TYPE 206b MAINTENANCE HOLE

REV DATE: AUG 2015

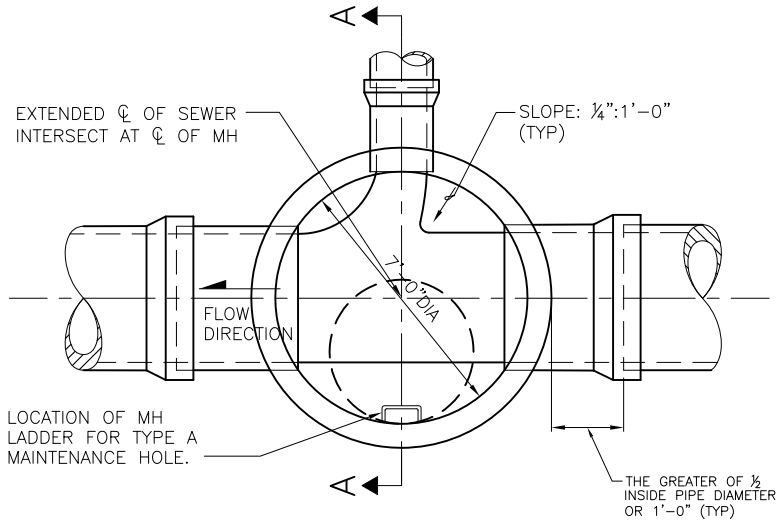

PLAN VIEW
(TOP REMOVED)

"H"	REINFORCING STEEL "A" MIN. SQ IN/FT, TOP FACE, IN EACH DIRECTION	
	PRECAST BASE	CAST–IN–PLACE BASE
20' MAX	0.42	034
30' MAX	0.51	0.41
40' MAX	0.60	0.48

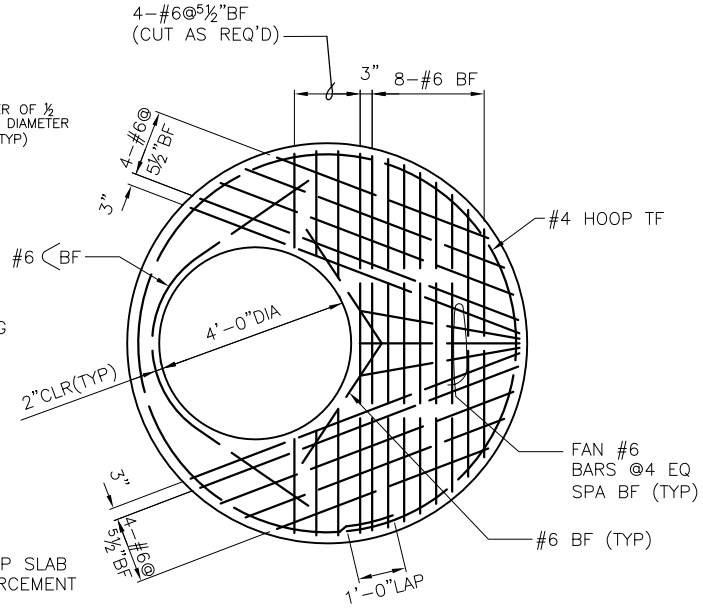

TOP SLAB REINFORCEMENT

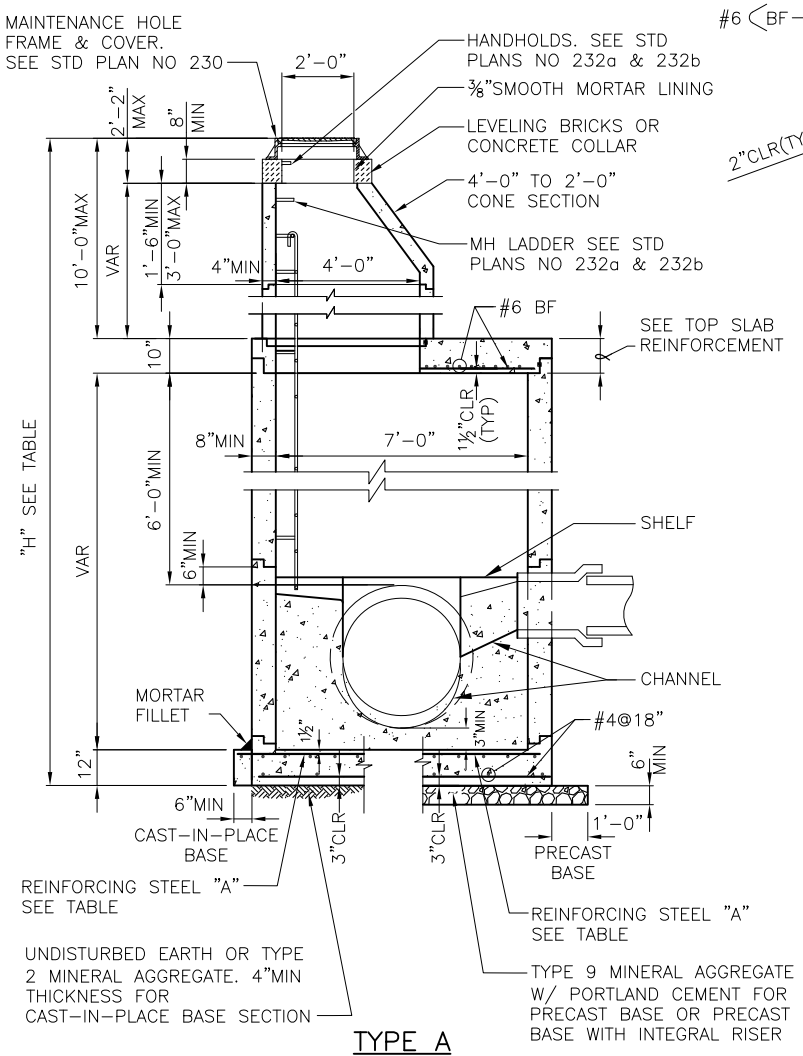

TYPE A
SECTION A–A

NOTES:

1. MATERIALS: CONCRETE–CLASS 4000; REINFORCING STEEL–ASTM A615 GRADE 60 MIN; CHANNEL AND SHELF MATERIAL – CONCRETE CLASS 3000.
2. PRECAST MAINTENANCE HOLE COMPONENTS SHALL CONFORM TO ASTM C 478. JOINTS BETWEEN PRECAST COMPONENTS SHALL BE RUBBER GASKETED CONFORMING TO ASTM C 443.
3. MINIMUM REQUIRED SOIL BEARING = 3,000 LBS/SQ FT
4. MAX HOLE SIZE SHALL BE OD OF PIPE PLUS 8 IN. MIN HOLE SIZE SHALL BE OD OF PIPE PLUS 3 IN. MIN CLEAR DISTANCE BETWEEN HOLES IS 12 IN.

REF STD SPEC SEC 7-05

City of Seattle	NOT TO SCALE	TYPE 207a MAINTENANCE HOLE

REV DATE: AUG 2015

"H"	REINFORCING STEEL "A" MIN. SQ IN/FT, TOP FACE, IN EACH DIRECTION	
	PRECAST BASE	CAST-IN-PLACE BASE
20' MAX	0.34	0.27
30' MAX	0.43	0.35
40' MAX	0.52	0.42

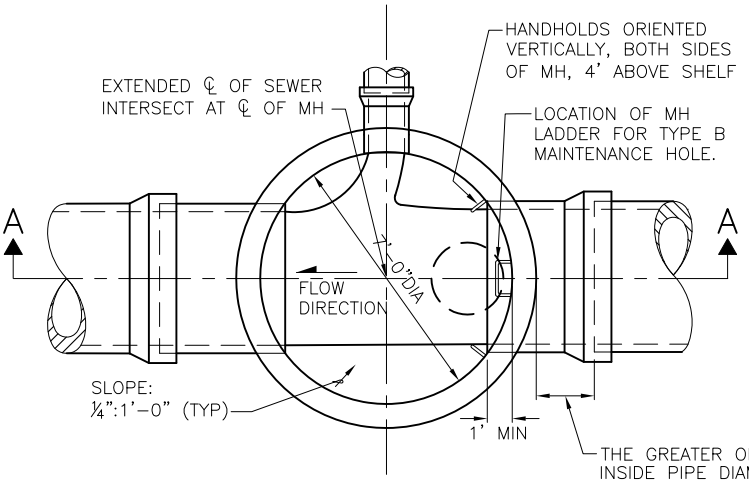

PLAN VIEW
(TOP REMOVED)

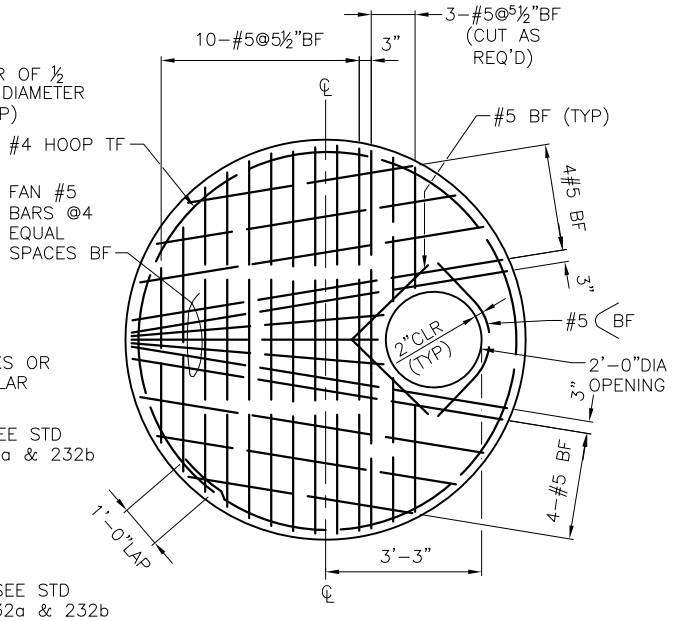

TOP SLAB REINFORCEMENT

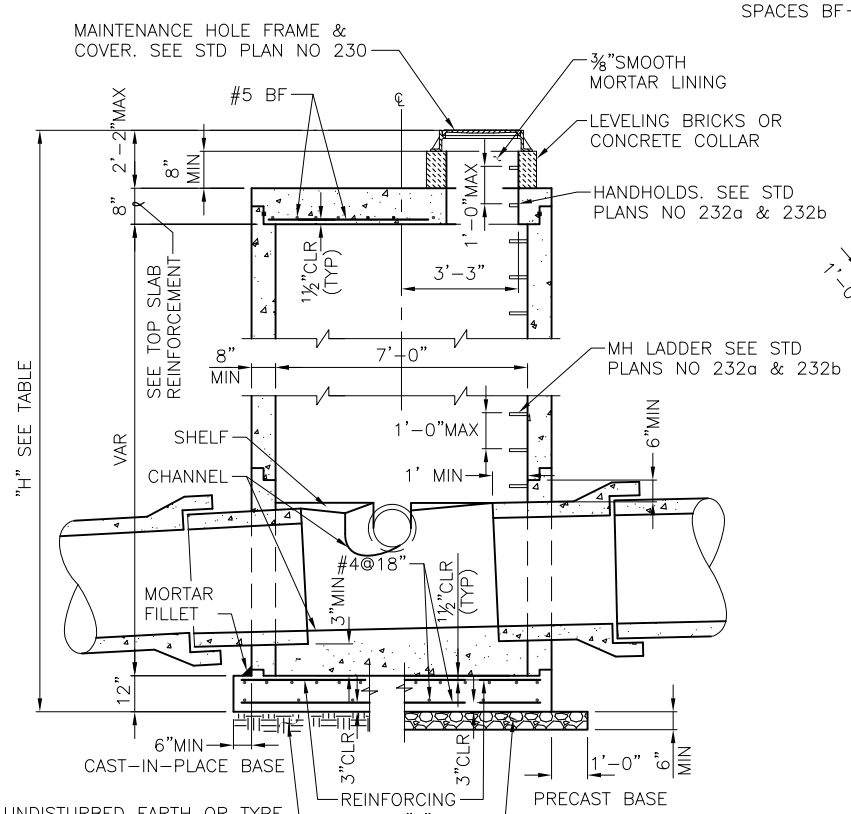

TYPE B
SECTION A-A

NOTES:

1. MATERIAL: CONCRETE-CLASS 4000; REINFORCING STEEL-ASTM A615 GRADE 60 MIN; CHANNEL AND SHELF MATERIAL-CONCRETE CLASS 3000.
2. PRECAST MAINTENANCE HOLE COMPONENTS SHALL CONFORM TO ASTM C 478. JOINTS BETWEEN PRECAST COMPONENTS SHALL BE RUBBER GASKETED CONFORMING TO ASTM C 443.
3. MINIMUM REQUIRED SOIL BEARING = 3,000 LBS/SQ FT
4. MAX HOLE SIZE SHALL BE OD OF PIPE PLUS 8 IN. MIN HOLE SIZE SHALL BE OD OF PIPE PLUS 3 IN. MIN CLEAR DISTANCE BETWEEN HOLES IS 12 IN.

REF STD SPEC SEC 7-05

City of Seattle	NOT TO SCALE	TYPE 207b MAINTENANCE HOLE

REV DATE: AUG 2015

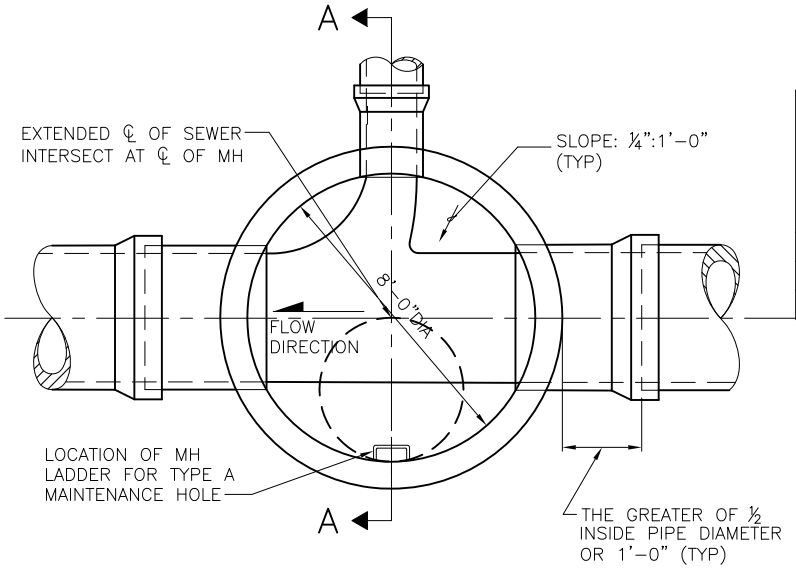

PLAN VIEW
(TOP REMOVED)

"H"	REINFORCING STEEL "A" MIN. SQ IN/FT, TOP FACE, IN EACH DIRECTION	
	PRECAST BASE	CAST–IN–PLACE BASE
20' MAX	0.54	0.45
30' MAX	0.66	0.55
40' MAX	0.78	0.64

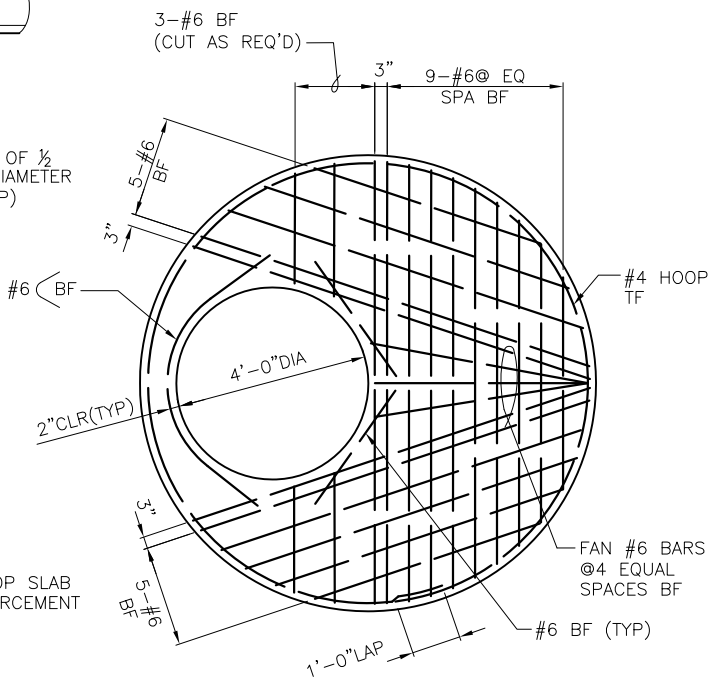

TOP SLAB REINFORCEMENT

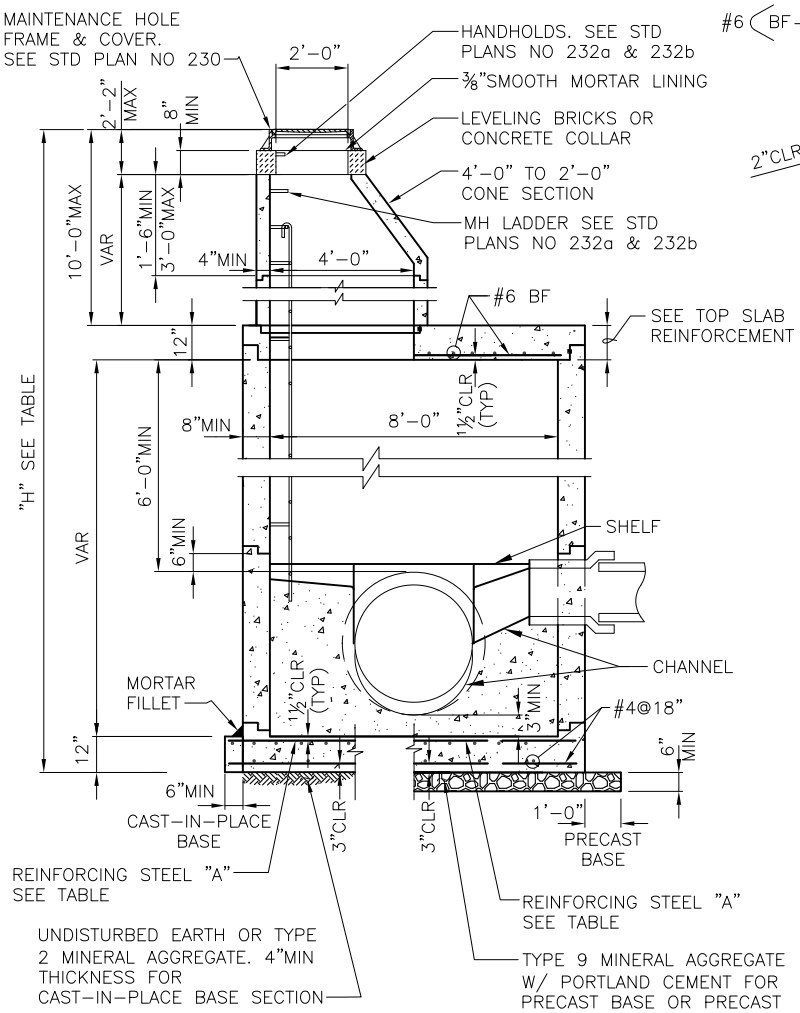

TYPE A
SECTION A–A

NOTES:

1. MATERIAL; CONCRETE–CLASS 4000 REINFORCING STEEL–ASTM A615 GRADE 60 MIN CHANNEL AND SHELF MATERIAL; CONCRETE CLASS 3000.
2. PRECAST MAINTENANCE HOLE COMPONENTS SHALL CONFORM TO ASTM C 478. JOINTS BETWEEN PRECAST COMPONENTS SHALL BE RUBBER GASKETED CONFORMING TO ASTM C 443.
3. MINIMUM REQUIRED SOIL BEARING = 3,000 LBS/SQ FT
4. MAX HOLE SIZE SHALL BE OD OF PIPE PLUS 9". MIN HOLE SIZE SHALL BE OD OF PIPE PLUS 3". MIN DISTANCE BETWEEN HOLES IS 12".

REF STD SPEC SEC 7-05

City of Seattle	NOT TO SCALE	TYPE 208a MAINTENANCE HOLE

REV DATE: AUG 2015

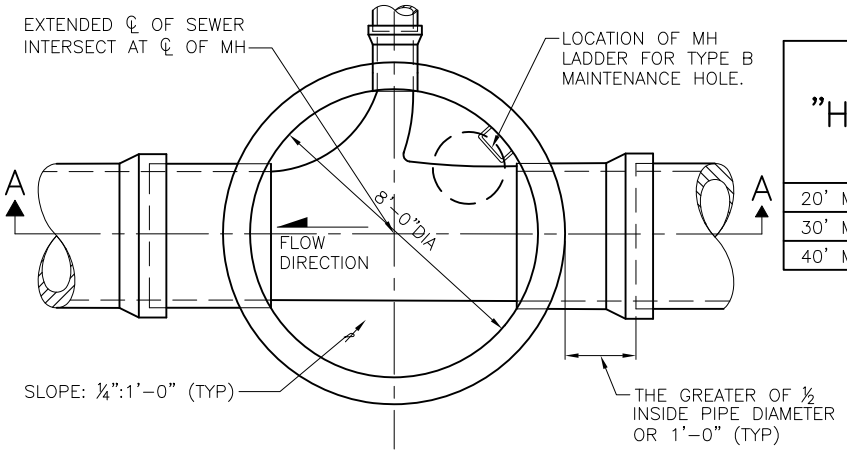

PLAN VIEW
(TOP REMOVED)

"H"	REINFORCING STEEL "A" MIN. SQ IN/FT, TOP FACE, IN EACH DIRECTION	
	PRECAST BASE	CAST-IN-PLACE BASE
20' MAX	0.42	0.35
30' MAX	0.53	0.45
40' MAX	0.65	0.54

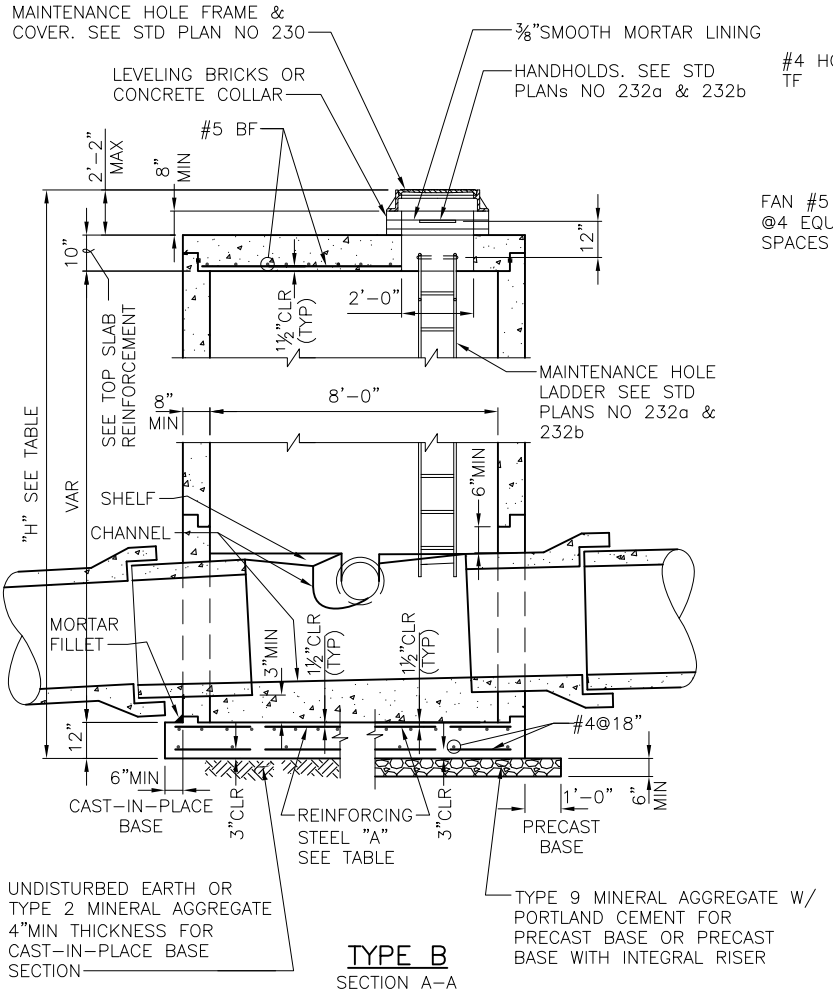

TYPE B
SECTION A-A

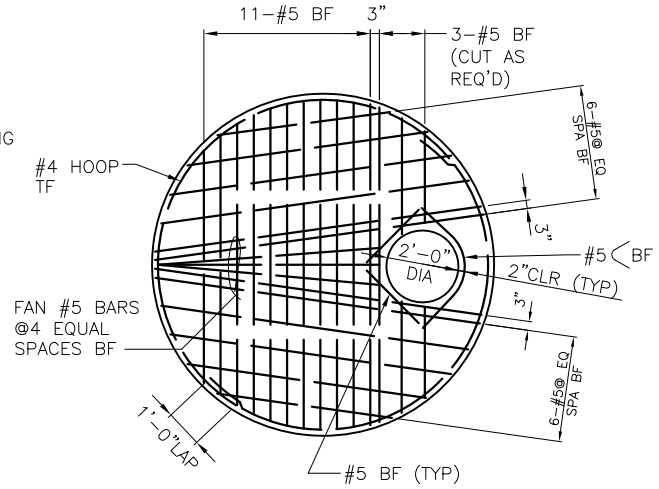

TOP SLAB REINFORCEMENT

NOTES:

1. MATERIAL; CONCRETE-CLASS 4000 REINFORCING STEEL-ASTM A615 GRADE 60 MIN CHANNEL AND SHELF MATERIAL; CONCRETE CLASS 3000.
2. PRECAST MAINTENANCE HOLE COMPONENTS SHALL CONFORM TO ASTM C 478. JOINTS BETWEEN PRECAST COMPONENTS SHALL BE RUBBER GASKETED CONFORMING TO ASTM C 443.
3. MINIMUM REQUIRED SOIL BEARING = 3,000 LBS/SQ FT
4. MAX HOLE SIZE SHALL BE OD OF PIPE PLUS 9". MIN HOLE SIZE SHALL BE OD OF PIPE PLUS 3". MIN DISTANCE BETWEEN HOLES IS 12".

REF STD SPEC SEC 7-05

City of Seattle	NOT TO SCALE	TYPE 208b MAINTENANCE HOLE

REV DATE: AUG 2015

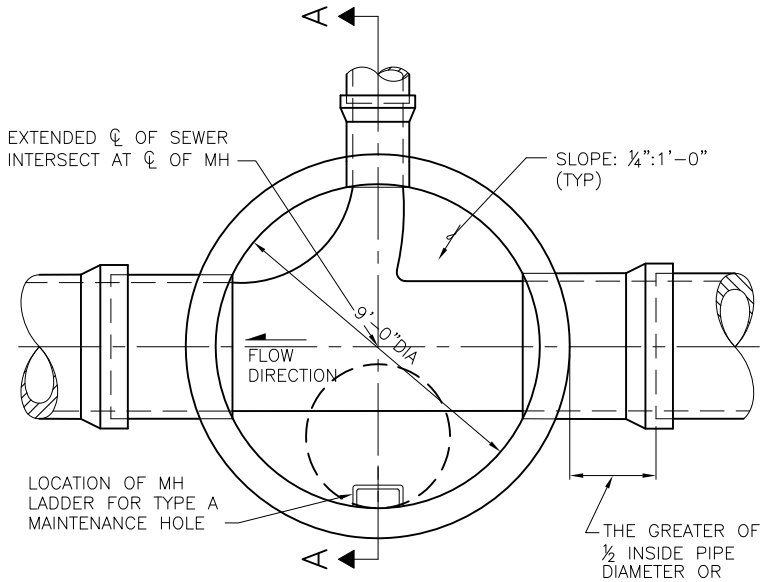

PLAN VIEW
(TOP REMOVED)

"H"	REINFORCING STEEL "A" MIN. SQ IN/FT, TOP FACE, IN EACH DIRECTION	
	PRECAST BASE	CAST–IN–PLACE BASE
20' MAX	0.57	0.49
30' MAX	0.70	0.59
40' MAX	0.81	0.69

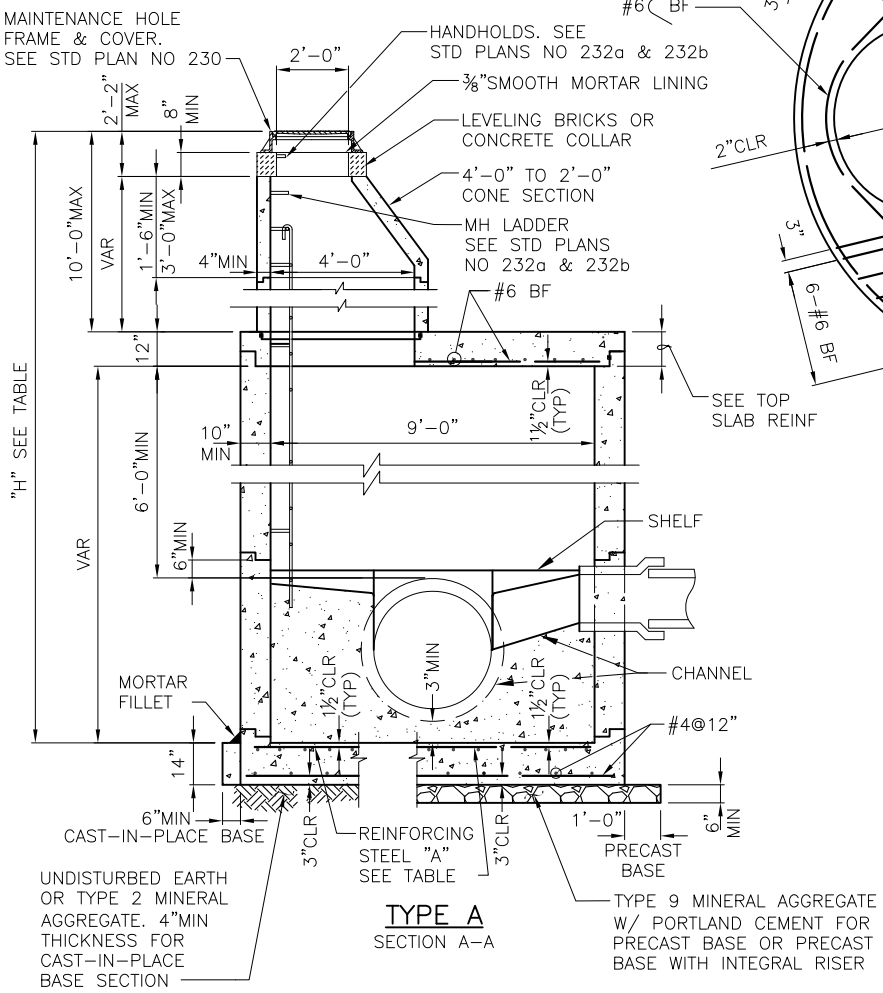

TYPE A
SECTION A–A

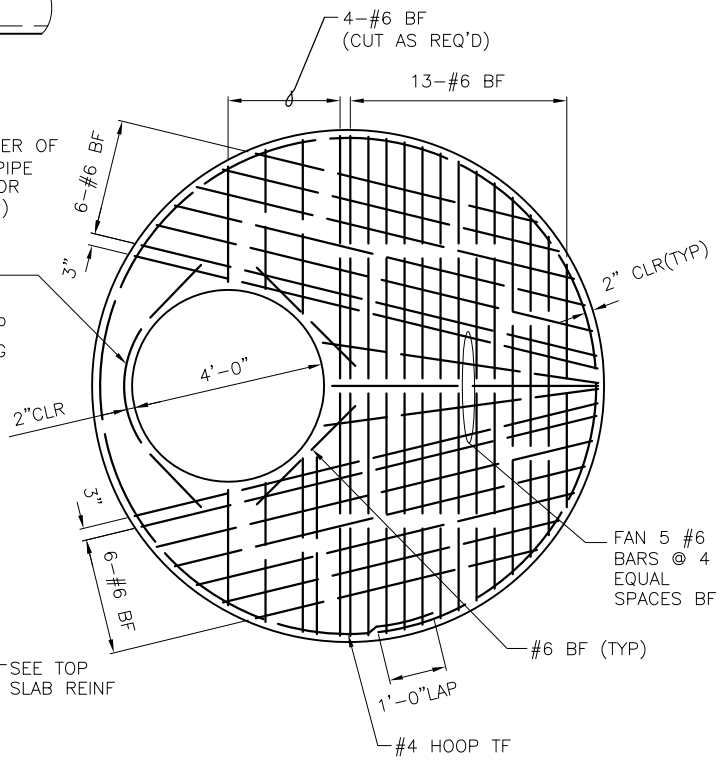

TOP SLAB REINFORCEMENT

NOTES:

1. MATERIAL; CONCRETE–CLASS 4000
   REINFORCING STEEL–ASTM A615 GRADE 60 MIN
   CHANNEL AND SHELF MATERIAL; CONCRETE CLASS 3000.
2. PRECAST MAINTENANCE HOLE COMPONENTS SHALL CONFORM TO ASTM C 478. JOINTS BETWEEN PRECAST COMPONENTS SHALL BE RUBBER GASKETED CONFORMING TO ASTM C 443.
3. MINIMUM REQUIRED SOIL BEARING = 3,000 LBS/SQ FT
4. MAX HOLE SIZE SHALL BE OD OF PIPE PLUS 10". MIN HOLE SIZE SHALL BE OD OF PIPE PLUS 3". MIN DISTANCE BETWEEN HOLES IS 12".

REF STD SPEC SEC 7-05

City of Seattle	NOT TO SCALE	TYPE 209a MAINTENANCE HOLE

REV DATE: AUG 2015

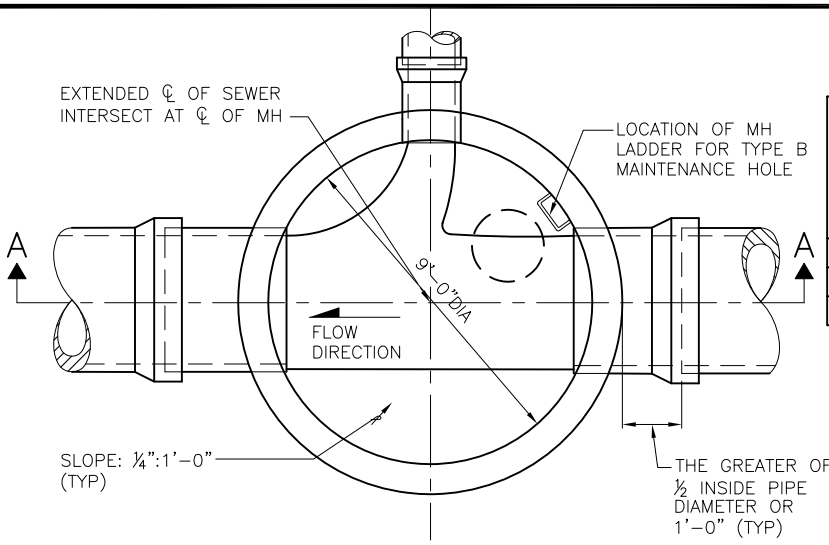

PLAN VIEW
(TOP REMOVED)

"H"	REINFORCING STEEL "A" MIN. SQ IN/FT, TOP FACE, IN EACH DIRECTION	
	PRECAST BASE	CAST-IN-PLACE BASE
20' MAX	0.44	0.37
30' MAX	0.56	0.48
40' MAX	0.68	0.58

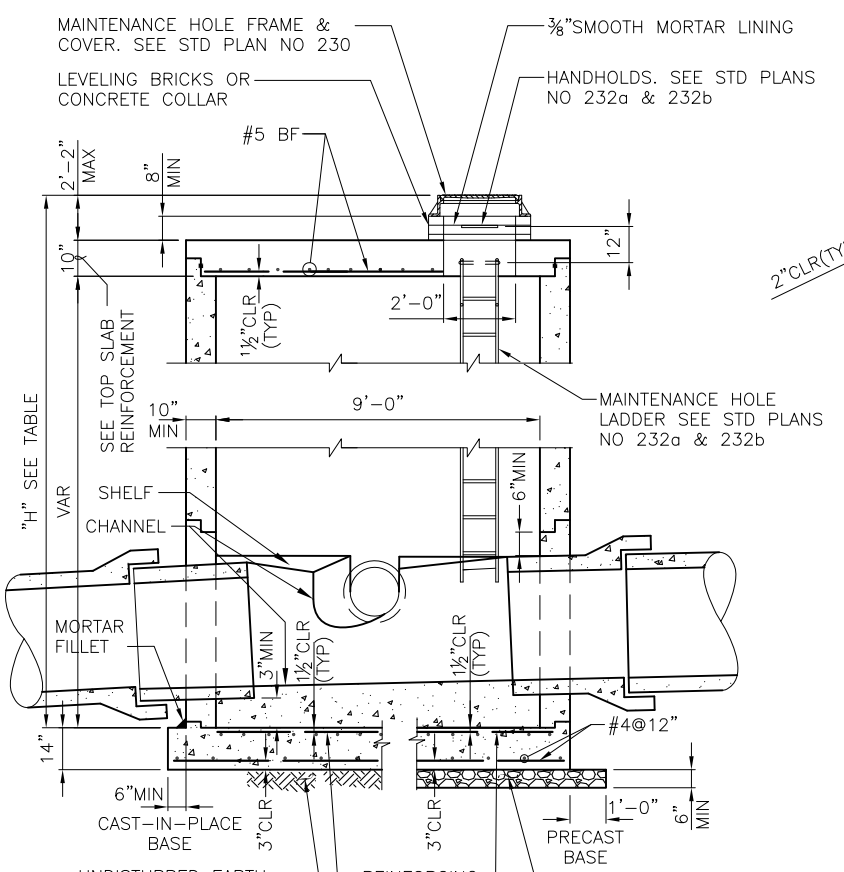

TYPE B
SECTION A-A

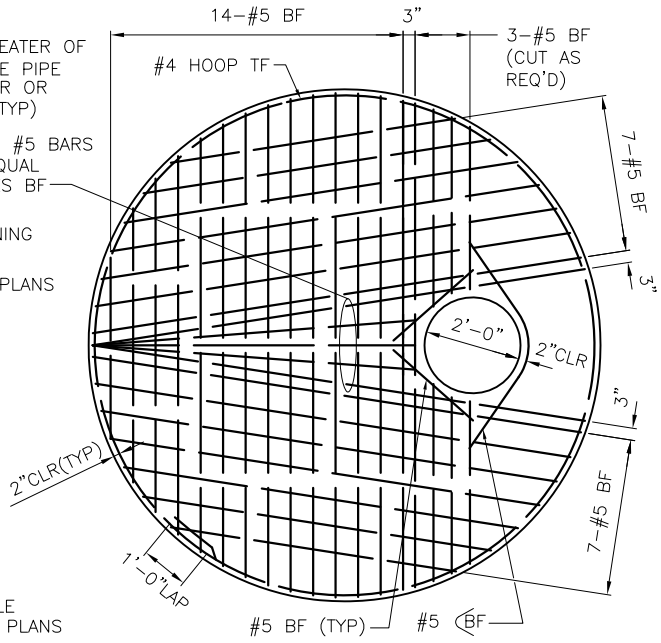

TOP SLAB REINFORCEMENT

NOTES:

1. MATERIAL; CONCRETE-CLASS 4000 REINFORCING STEEL-ASTM A615 GRADE 60 MIN CHANNEL AND SHELF MATERIAL; CONCRETE CLASS 3000.
2. PRECAST MAINTENANCE HOLE COMPONENTS SHALL CONFORM TO ASTM C 478. JOINTS BETWEEN PRECAST COMPONENTS SHALL BE RUBBER GASKETED CONFORMING TO ASTM C 443.
3. MINIMUM REQUIRED SOIL BEARING = 3,000 LBS/SQ FT
4. MAX HOLE SIZE SHALL BE OD OF PIPE PLUS 10". MIN HOLE SIZE SHALL BE OD OF PIPE PLUS 3". MIN DISTANCE BETWEEN HOLES IS 12".

REF STD SPEC SEC 7-05

City of Seattle	NOT TO SCALE	TYPE 209b MAINTENANCE HOLE

REV DATE: AUG 2015

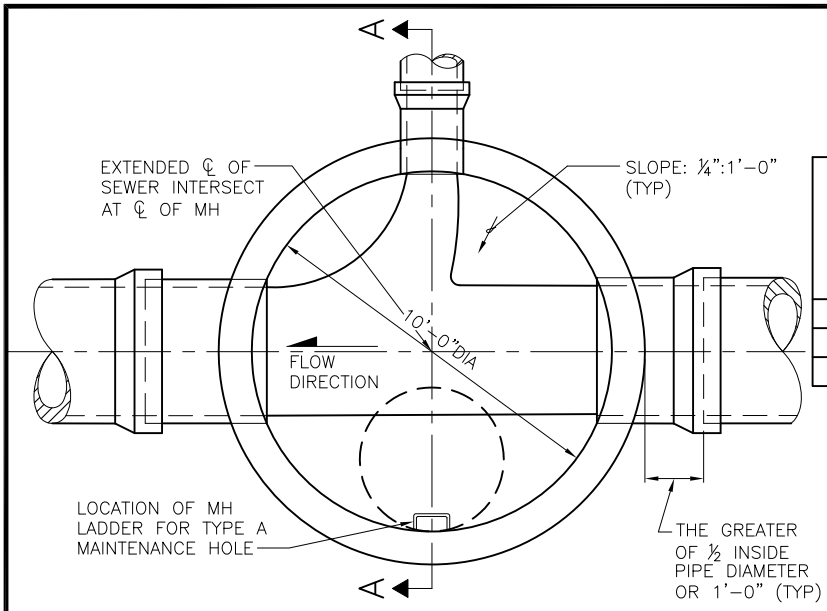

PLAN VIEW
(TOP REMOVED)

"H"	REINFORCING STEEL "A" MIN. SQ IN/FT, TOP FACE, IN EACH DIRECTION	
	PRECAST BASE	CAST–IN–PLACE BASE
20' MAX	0.70	0.60
30' MAX	0.85	0.73
40' MAX	1.00	0.86

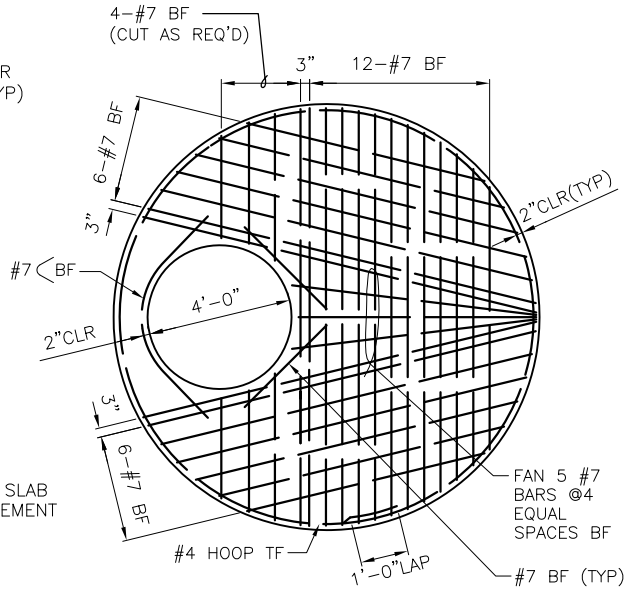

TOP SLAB REINFORCEMENT

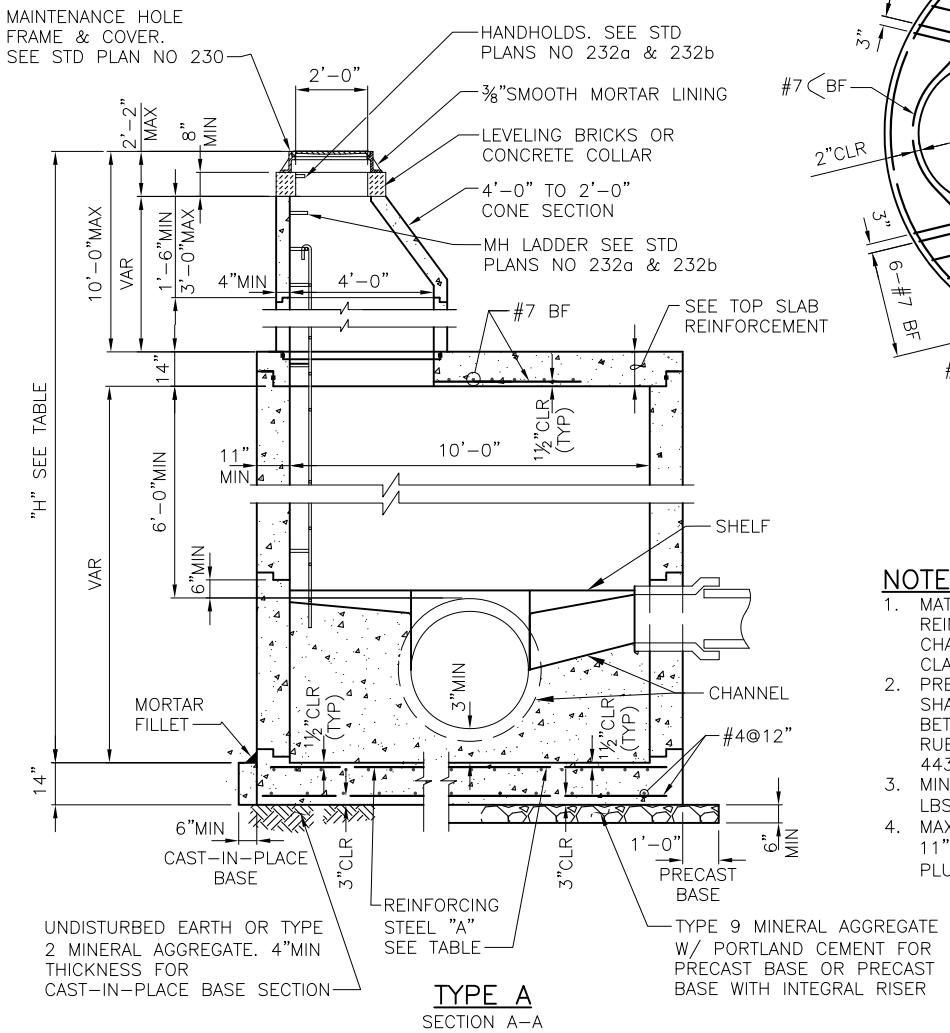

TYPE A
SECTION A–A

NOTES:

1. MATERIAL; CONCRETE–CLASS 4000 REINFORCING STEEL–ASTM A615 GRADE 60 MIN CHANNEL AND SHELF MATERIAL; CONCRETE CLASS 3000.
2. PRECAST MAINTENANCE HOLE COMPONENTS SHALL CONFORM TO ASTM C 478. JOINTS BETWEEN PRECAST COMPONENTS SHALL BE RUBBER GASKETED CONFORMING TO ASTM C 443.
3. MINIMUM REQUIRED SOIL BEARING = 3,000 LBS/SQ FT
4. MAX HOLE SIZE SHALL BE OD OF PIPE PLUS 11". MIN HOLE SIZE SHALL BE OD OF PIPE PLUS 3". MIN DISTANCE BETWEEN HOLES IS 12".

REF STD SPEC SEC 7-05

City of Seattle	NOT TO SCALE	TYPE 210a MAINTENANCE HOLE

REV DATE: AUG 2015

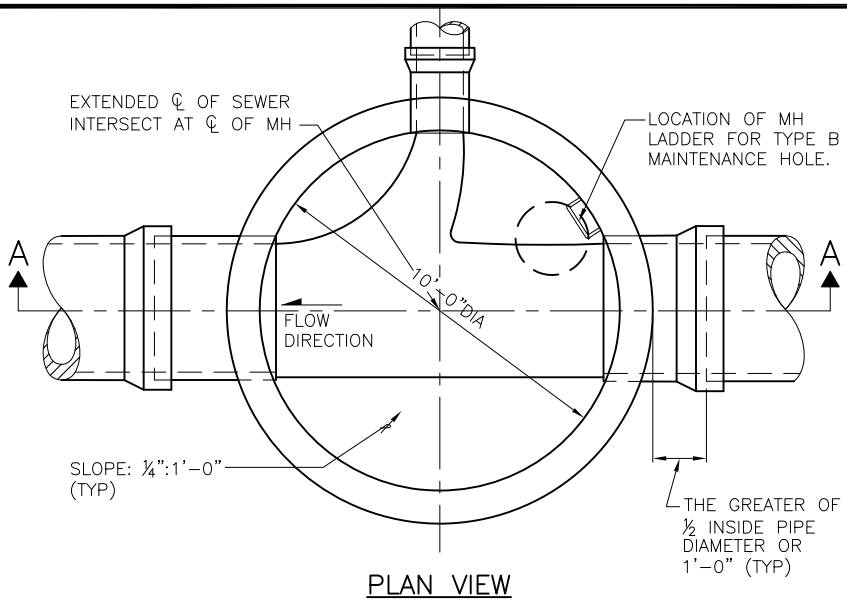

PLAN VIEW
(TOP REMOVED)

"H"	REINFORCING STEEL "A" MIN. SQ IN/FT, TOP FACE, IN EACH DIRECTION	
	PRECAST BASE	CAST-IN-PLACE BASE
20' MAX	052	0.45
30' MAX	0.66	0.57
40' MAX	0.81	0.70

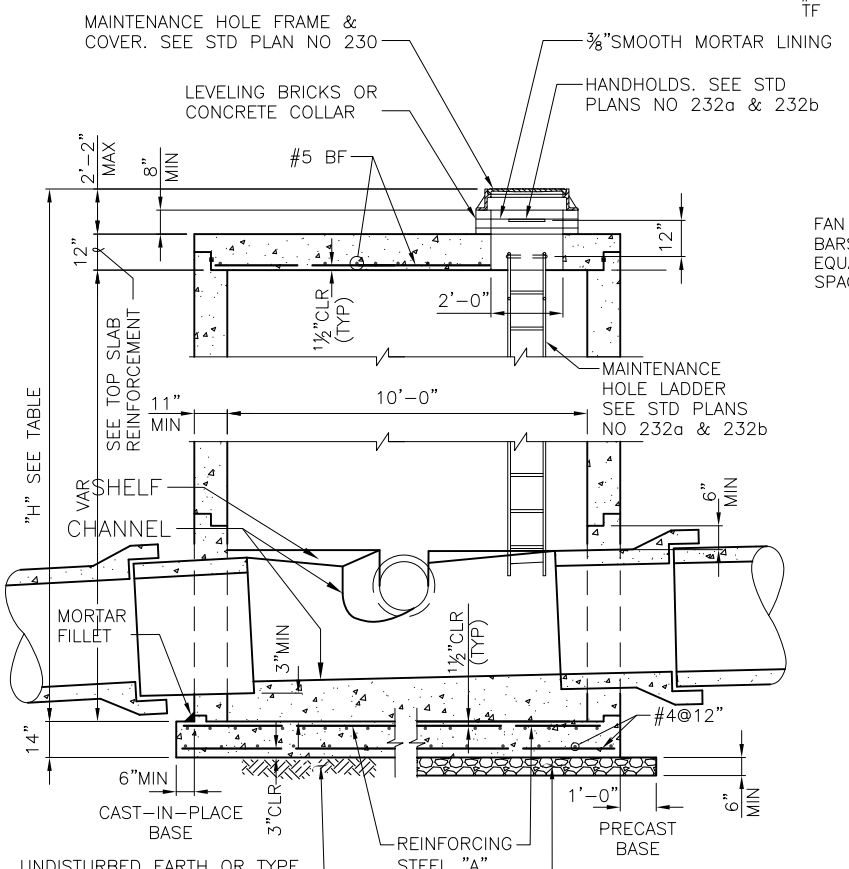

TYPE B
SECTION A-A

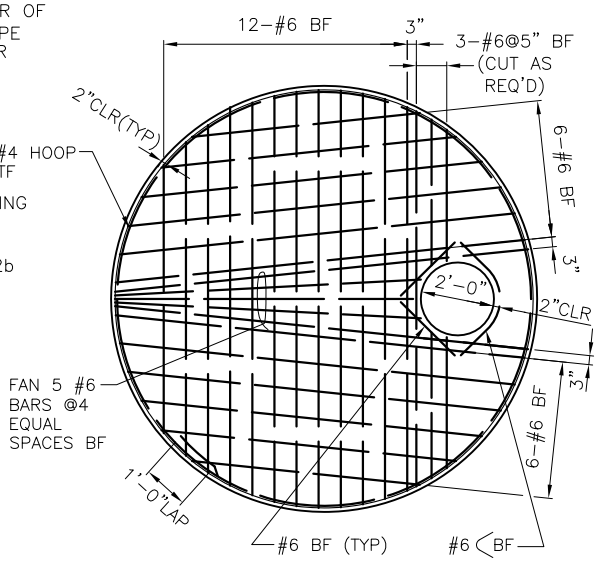

TOP SLAB REINFORCEMENT

NOTES:

1. MATERIAL; CONCRETE-CLASS 4000 REINFORCING STEEL-ASTM A615 GRADE 60 MIN CHANNEL AND SHELF MATERIAL; CONCRETE CLASS 3000.
2. PRECAST MAINTENANCE HOLE COMPONENTS SHALL CONFORM TO ASTM C 478. JOINTS BETWEEN PRECAST COMPONENTS SHALL BE RUBBER GASKETED CONFORMING TO ASTM C 443.
3. MINIMUM REQUIRED SOIL BEARING = 3,000 LBS/SQ FT
4. MAX HOLE SIZE SHALL BE OD OF PIPE PLUS 11". MIN HOLE SIZE SHALL BE OD OF PIPE PLUS 3". MIN DISTANCE BETWEEN HOLES IS 12".

REF STD SPEC SEC 7-05

City of Seattle	NOT TO SCALE	TYPE 210b MAINTENANCE HOLE

REV DATE: AUG 2015

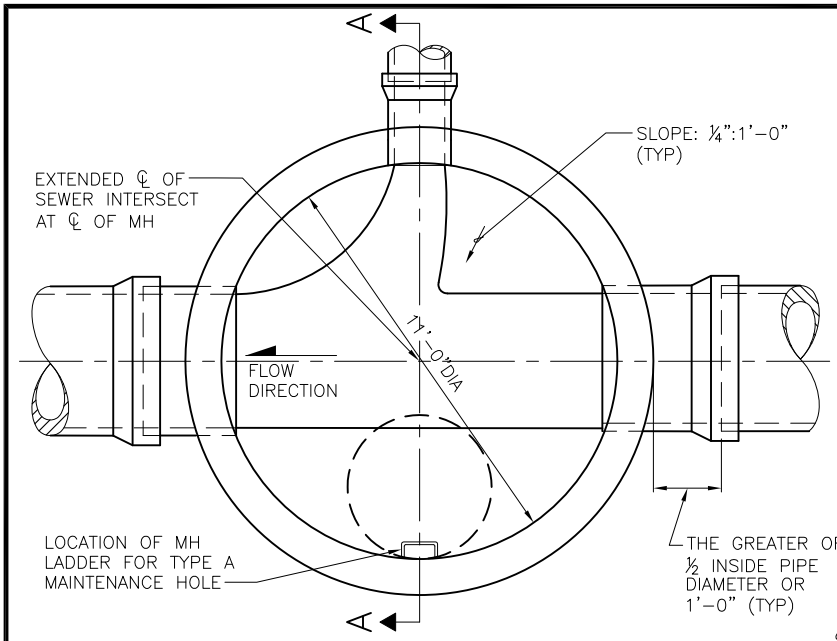

PLAN VIEW
(TOP REMOVED)

"H"	REINFORCING STEEL "A" MIN. SQ IN/FT, TOP FACE, IN EACH DIRECTION	
	PRECAST BASE	CAST–IN–PLACE BASE
20' MAX	0.85	0.74
30' MAX	1.02	0.89
40' MAX	1.20	1.05

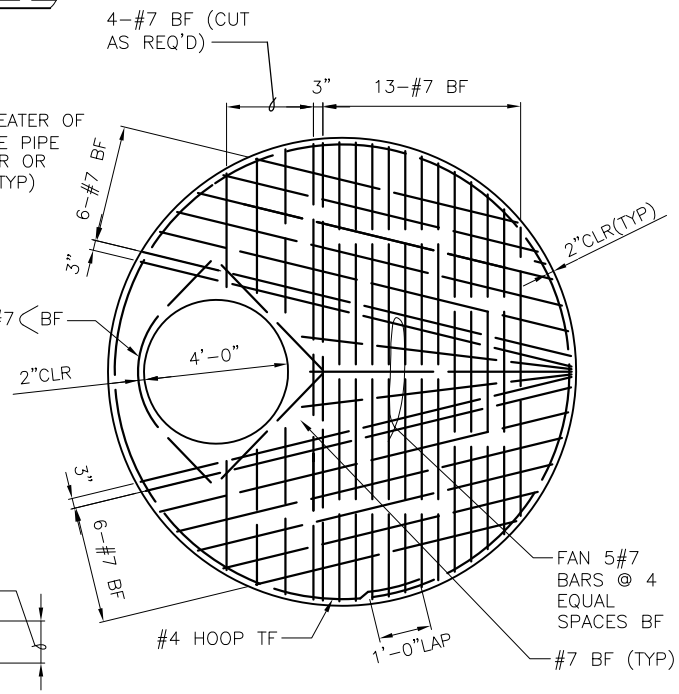

TOP SLAB REINFORCEMENT

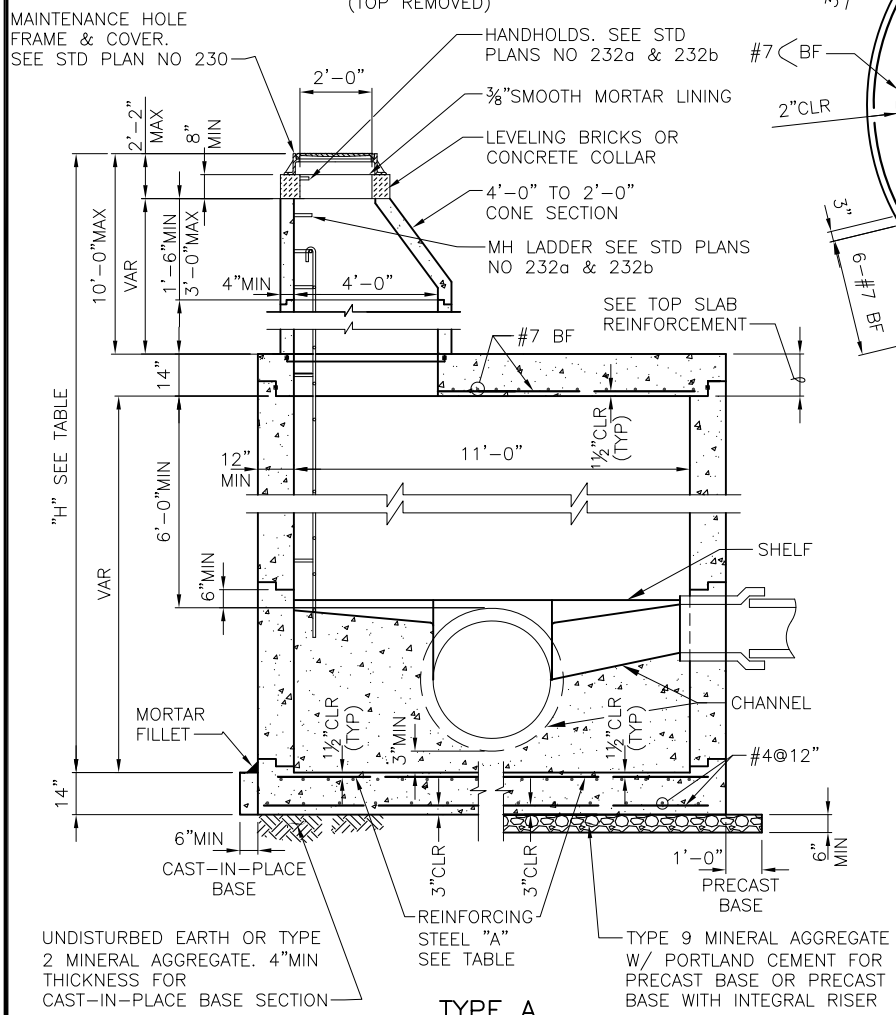

TYPE A
SECTION A–A

NOTES:

1. MATERIAL; CONCRETE–CLASS 4000 REINFORCING STEEL–ASTM A615 GRADE 60 MIN CHANNEL AND SHELF MATERIAL; CONCRETE CLASS 3000.
2. PRECAST MAINTENANCE HOLE COMPONENTS SHALL CONFORM TO ASTM C 478. JOINTS BETWEEN PRECAST COMPONENTS SHALL BE RUBBER GASKETED CONFORMING TO ASTM C 443.
3. MINIMUM REQUIRED SOIL BEARING = 3,000 LBS/SQ FT
4. MAX HOLE SIZE SHALL BE OD OF PIPE PLUS 12". MIN HOLE SIZE SHALL BE OD OF PIPE PLUS 3". MIN DISTANCE BETWEEN HOLES IS 12".

REF STD SPEC SEC 7-05

City of Seattle	NOT TO SCALE	TYPE 211a MAINTENANCE HOLE

REV DATE: AUG 2015

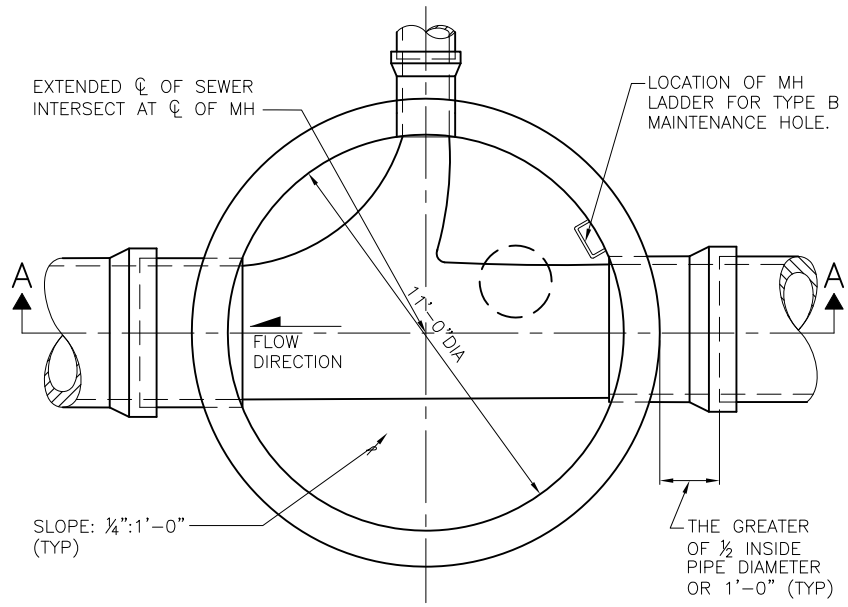

PLAN VIEW
(TOP REMOVED)

"H"	REINFORCING STEEL "A" MIN. SQ IN/FT, TOP FACE, IN EACH DIRECTION	
	PRECAST BASE	CAST-IN-PLACE BASE
20' MAX	0.62	0.54
30' MAX	0.79	0.69
40' MAX	0.97	0.85

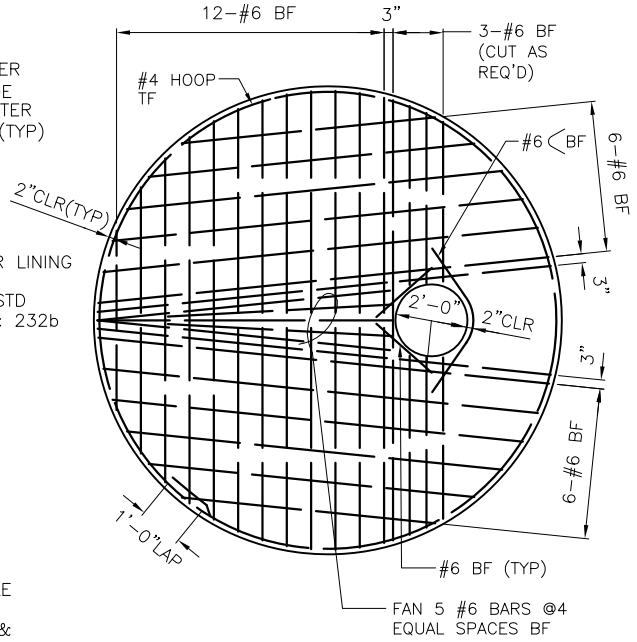

TOP SLAB REINFORCEMENT

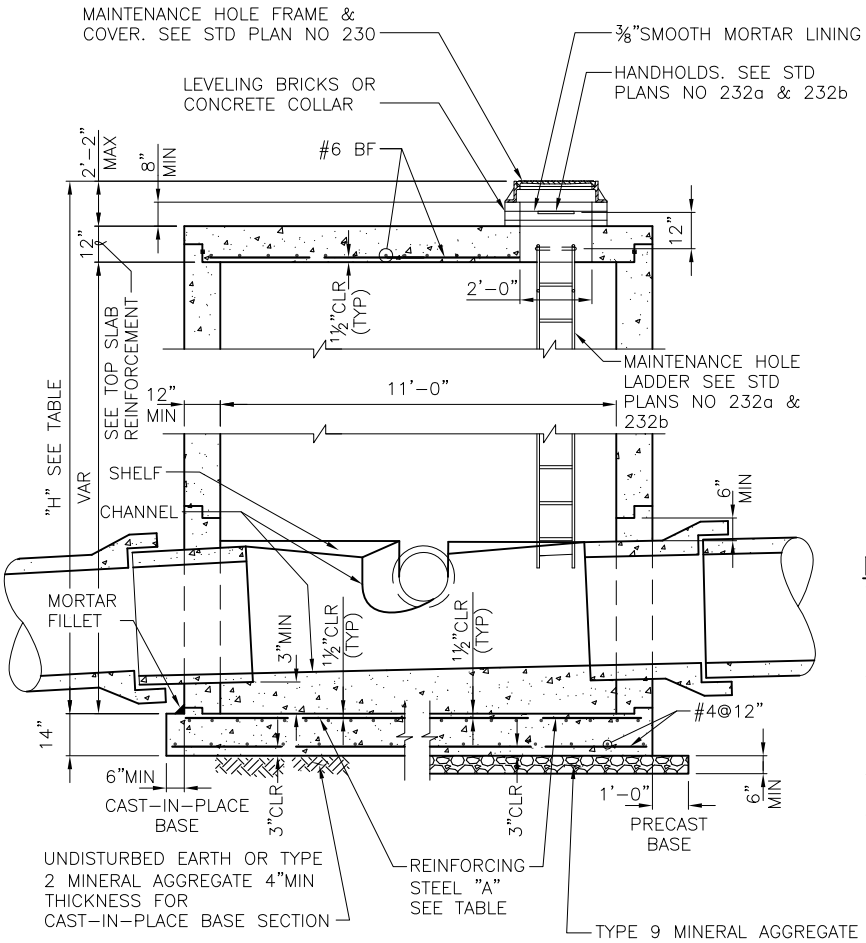

TYPE B
SECTION A-A

NOTES:

1. MATERIAL; CONCRETE-CLASS 4000 REINFORCING STEEL-ASTM A615 GRADE 60 MIN CHANNEL AND SHELF MATERIAL; CONCRETE CLASS 3000.
2. PRECAST MAINTENANCE HOLE COMPONENTS SHALL CONFORM TO ASTM C 478. JOINTS BETWEEN PRECAST COMPONENTS SHALL BE RUBBER GASKETED CONFORMING TO ASTM C 443.
3. MINIMUM REQUIRED SOIL BEARING = 3,000 LBS/SQ FT
4. MAX HOLE SIZE SHALL BE OD OF PIPE PLUS 12". MIN HOLE SIZE SHALL BE OD OF PIPE PLUS 3". MIN DISTANCE BETWEEN HOLES IS 12".

REF STD SPEC SEC 7-05

City of Seattle	NOT TO SCALE	TYPE 211b MAINTENANCE HOLE

REV DATE: AUG 2015

"H"	REINFORCING STEEL "A" MIN. SQ IN/FT, TOP FACE, IN EACH DIRECTION	
	PRECAST BASE	CAST-IN-PLACE BASE
20' MAX	1.01	0.89
30' MAX	1.28	1.13
40' MAX	1.56	1.37

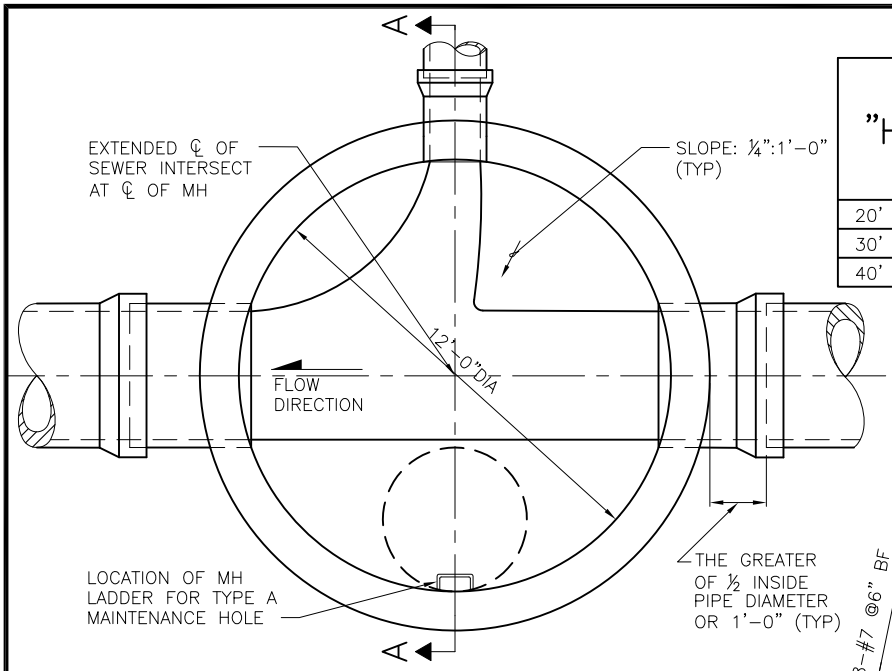

PLAN VIEW
(TOP REMOVED)

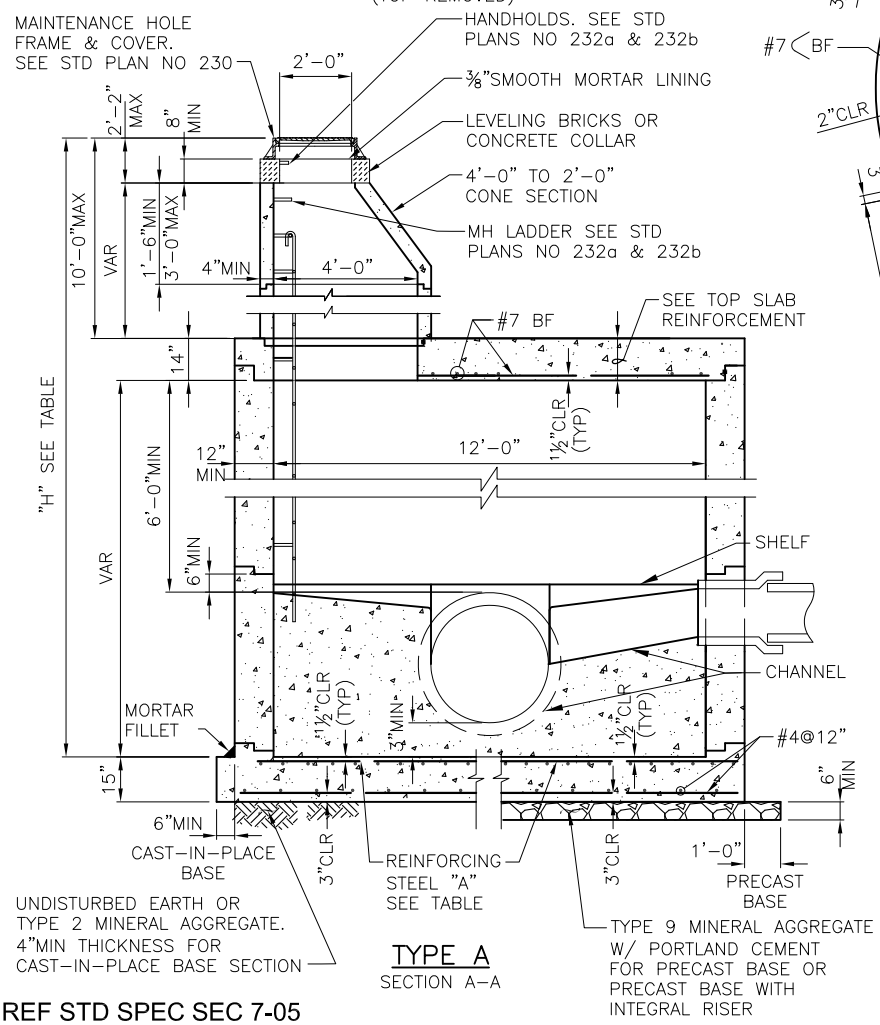

TYPE A
SECTION A-A

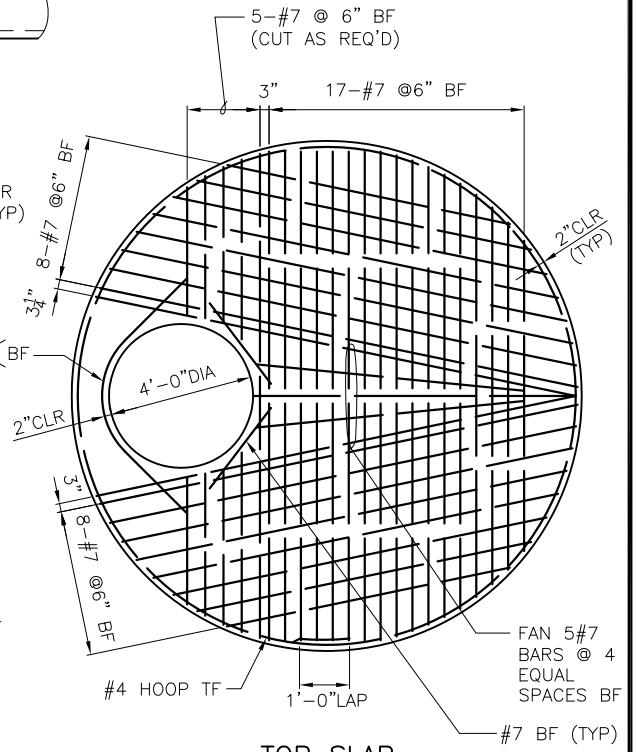

TOP SLAB REINFORCEMENT

NOTES:

1. MATERIAL; CONCRETE-CLASS 4000 REINFORCING STEEL-ASTM A615 GRADE 60 MIN CHANNEL AND SHELF MATERIAL; CONCRETE CLASS 3000.
2. PRECAST MAINTENANCE HOLE COMPONENTS SHALL CONFORM TO ASTM C 478. JOINTS BETWEEN PRECAST COMPONENTS SHALL BE RUBBER GASKETED CONFORMING TO ASTM C 443.
3. MINIMUM REQUIRED SOIL BEARING = 3,000 LBS/SQ FT
4. MAX HOLE SIZE SHALL BE OD OF PIPE PLUS 13". MIN HOLE SIZE SHALL BE OD OF PIPE PLUS 3". MIN DISTANCE BETWEEN HOLES IS 12".

REF STD SPEC SEC 7-05

City of Seattle	NOT TO SCALE	TYPE 212a MAINTENANCE HOLE

REV DATE: AUG 2015

"H"	REINFORCING STEEL "A" MIN. SQ IN/FT, TOP FACE, IN EACH DIRECTION	
	PRECAST BASE	CAST–IN–PLACE BASE
20' MAX	0.81	0.72
30' MAX	1.09	0.96
40' MAX	1.36	1.20

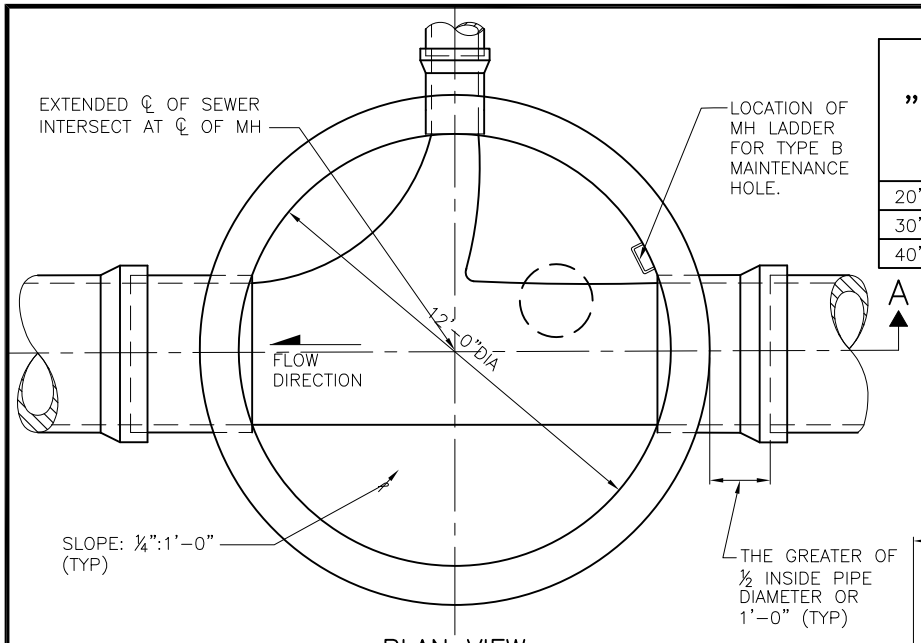

PLAN VIEW
(TOP REMOVED)

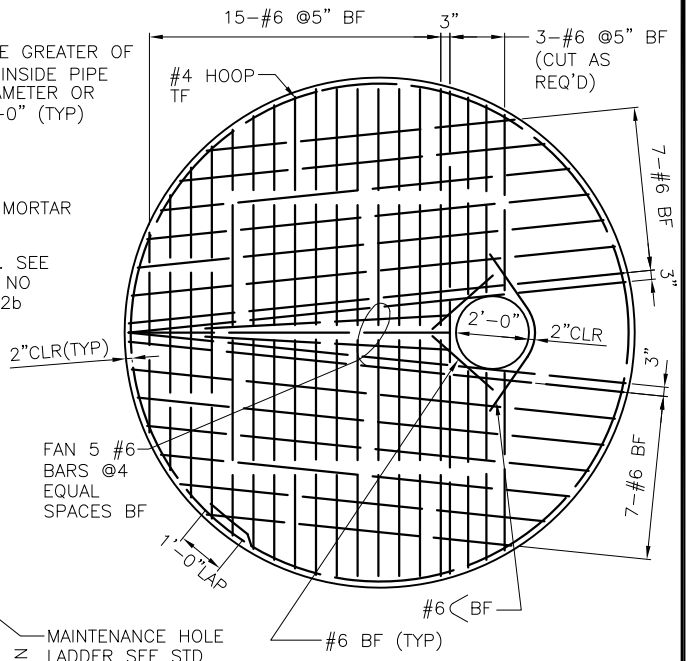

TOP SLAB REINFORCEMENT

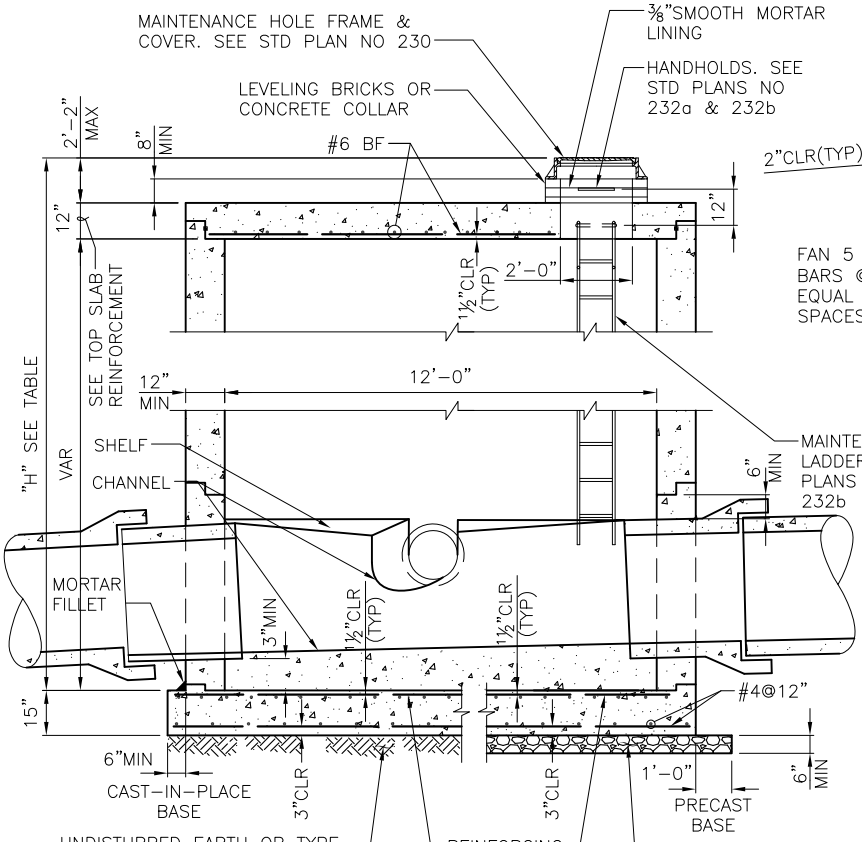

TYPE B
SECTION A–A

NOTES:

1. MATERIAL; CONCRETE–CLASS 4000 REINFORCING STEEL–ASTM A615 GRADE 60 MIN CHANNEL AND SHELF MATERIAL; CONCRETE CLASS 3000.
2. PRECAST MAINTENANCE HOLE COMPONENTS SHALL CONFORM TO ASTM C 478. JOINTS BETWEEN PRECAST COMPONENTS SHALL BE RUBBER GASKETED CONFORMING TO ASTM C 443.
3. MINIMUM REQUIRED SOIL BEARING = 3,000 LBS/SQ FT
4. MAX HOLE SIZE SHALL BE OD OF PIPE PLUS 13". MIN HOLE SIZE SHALL BE OD OF PIPE PLUS 3". MIN DISTANCE BETWEEN HOLES IS 12".

REF STD SPEC SEC 7-05

City of Seattle	NOT TO SCALE	TYPE 212b MAINTENANCE HOLE

REV DATE: JUN 2014

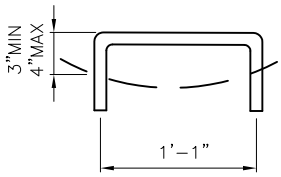

HANDHOLD

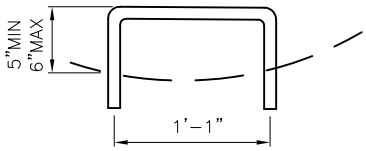

STEP

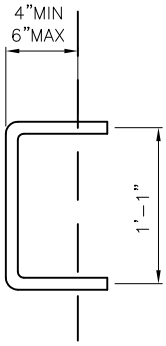

VERTICAL HANDHOLD

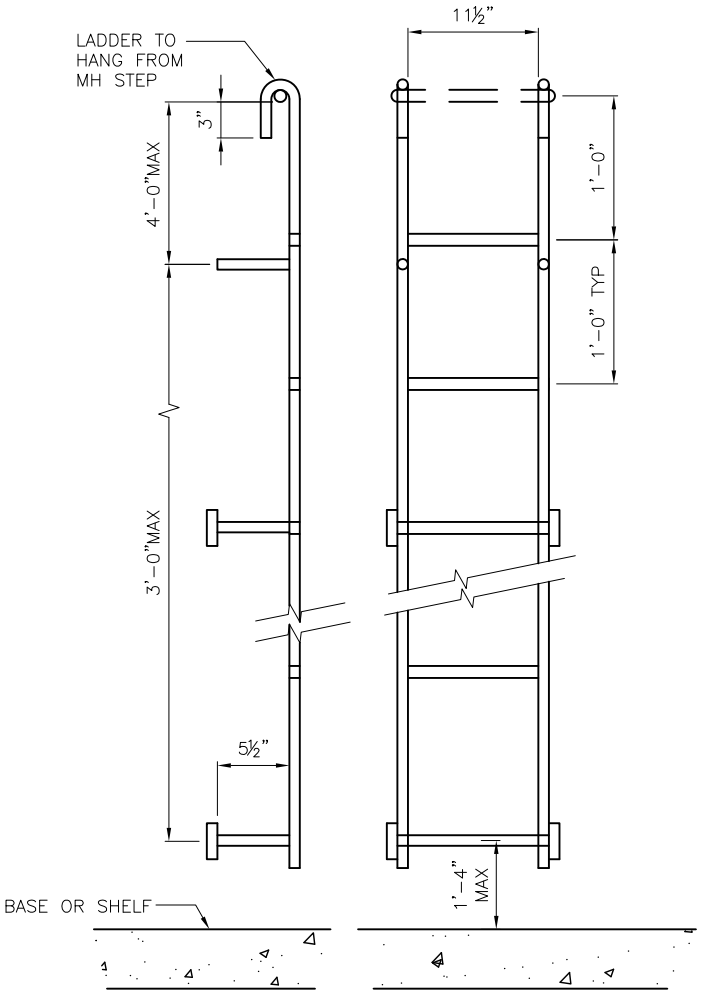

LADDER

NOTES:

1. MATERIAL – STEEL REINFORCED POLYPROPYLENE
2. DIMENSIONS FOR THE MH LADDER AND STEP ARE MINIMUM REQUIREMENTS ONLY.
3. WHEN THE DISTANCE FROM THE LAST (HIGHEST) STEP OR HANDHOLD TO THE TOP OF THE MH FRAME EXCEEDS 1'-6", A HANDHOLD SHALL BE INSTALLED MID-WAY IN THE LEVELING BRICK OR COLLAR.
4. EITHER STEPS, LADDERS OR A COMBINATION OF THE TWO CAN BE USED. IF BOTH STEPS AND LADDERS ARE USED IN ANY MH, THEY SHALL BE FROM THE SAME MANUFACTURER.
5. A VERTICAL HANDHOLD SHALL BE INSTALLED 4'-0" ABOVE THE SHELF WHEN INDICATED IN MH PLAN VIEW.

REF STD SPEC SEC 7-05

City of Seattle	NOT TO SCALE	MAINTENANCE HOLE LADDER, STEP AND HANDHOLD

REV DATE: DEC 2015

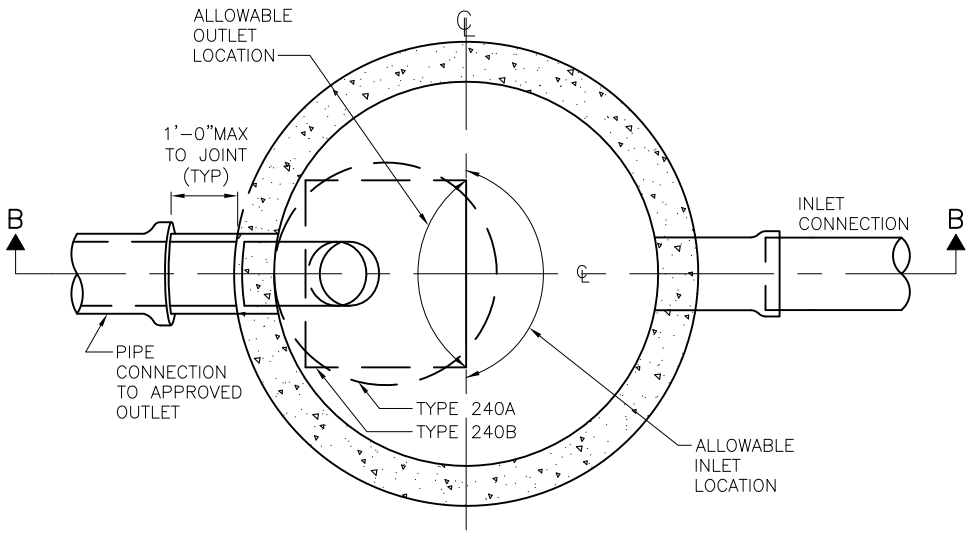

SECTION A–A

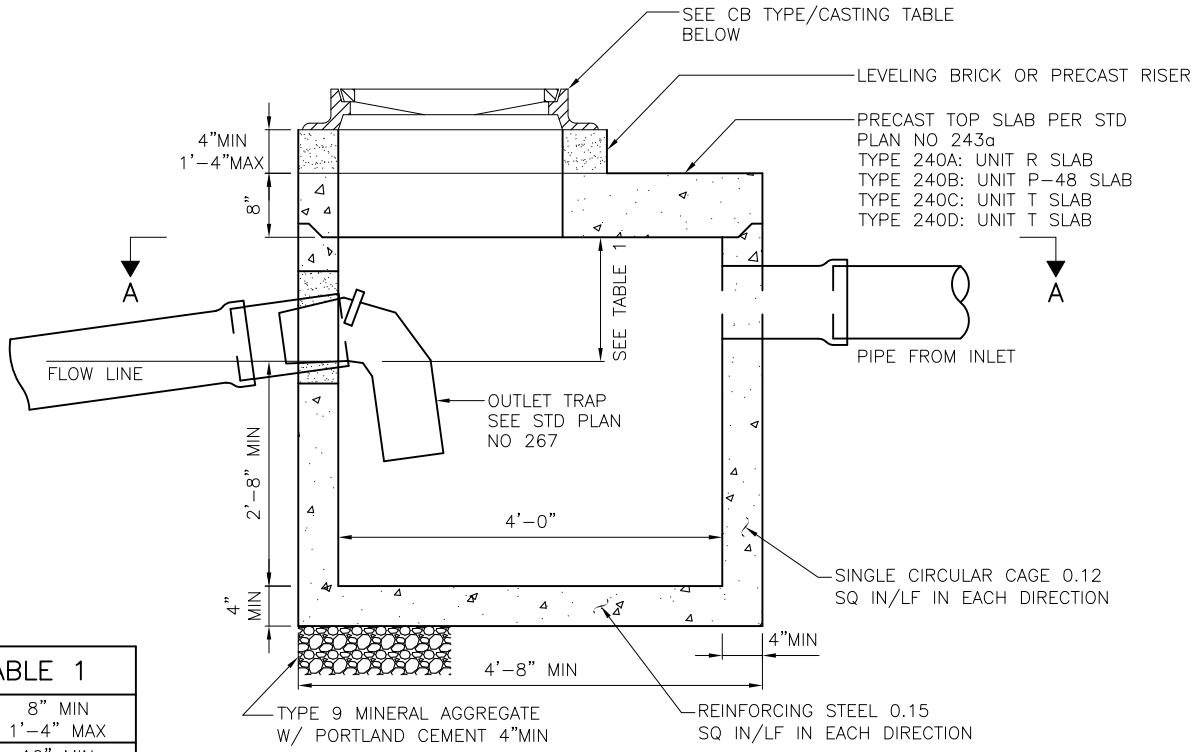

SECTION B–B

TABLE 1	
6"ø	8" MIN 1'-4" MAX
8"ø	10" MIN 1'-4" MAX
12"ø	1'-3" MIN 2'-0" MAX

NOTES:

1. FRAME & GRATE OR FRAME & COVER SHALL BE LOCATED OVER TRAP.
2. INVERT OF INLET PIPE SHALL BE 2"MIN ABOVE INVERT OF OUTLET PIPE.
3. SEE STD PLAN 261 FOR ALLOWABLE OUTLET LOCATIONS.

CB TYPE	CASTING	
	FRAME	COVER
240A	PER STD PLAN 230	PER STD PLAN 230
240B	PER STD PLAN 264	PER STD PLAN 264
240C	PER STD PLAN 262	PER STD PLAN 265
240D	PER STD PLAN 263A	PER STD PLAN 265

REF STD SPEC SEC 7-05

City of Seattle | NOT TO SCALE | TYPE 240 CATCH BASIN

REV DATE: AUG 2014

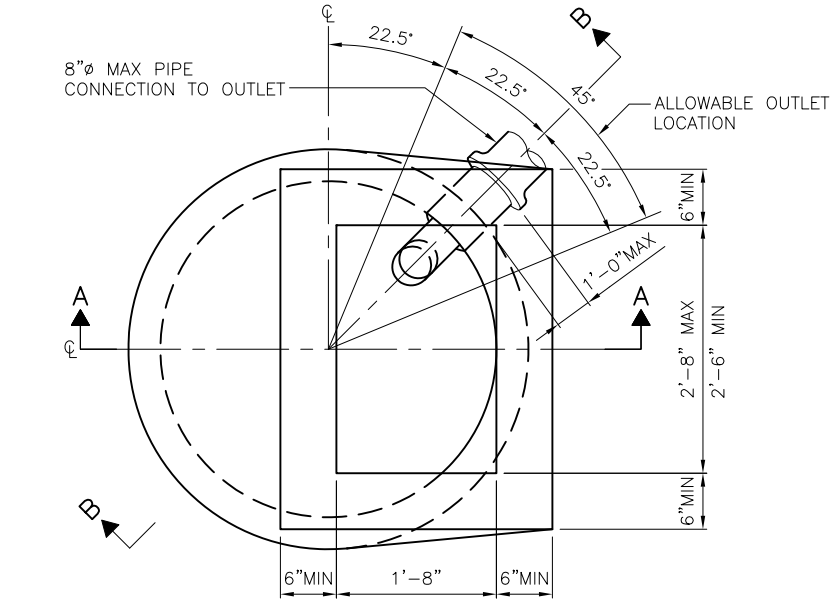

PLAN VIEW

CB TYPE	CASTING		
	FRAME	GRATE	HOOD
A	NO 262	NO 265	NONE
B	NO 263A	NO 265	NO 263A
C	NO 263A	NO 265	NO 263B

NOTES:

1. MATERIAL: CONCRETE: CLASS 4000
   REINFORCING STEEL: ASTM A 615 GR 60
2. INSTALL & LOCATE PER STD PLANS NO 260 & 261
3. OUTLET TRAP TO BE LOCATED DIRECTLY BELOW FRAME AND GRATE
4. USE OF LEVELING BRICKS SHALL BE RUNNING BOND PATTERN WITH ¼ TO ½ GROUT IN BETWEEN BRICKS.

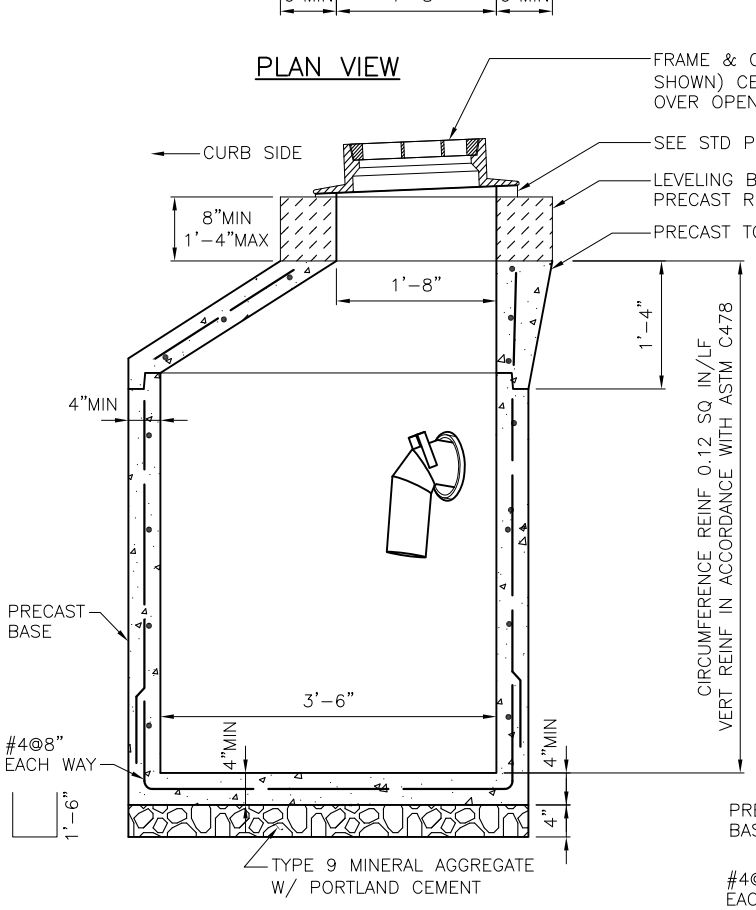

TYPE A
SECTION A–A

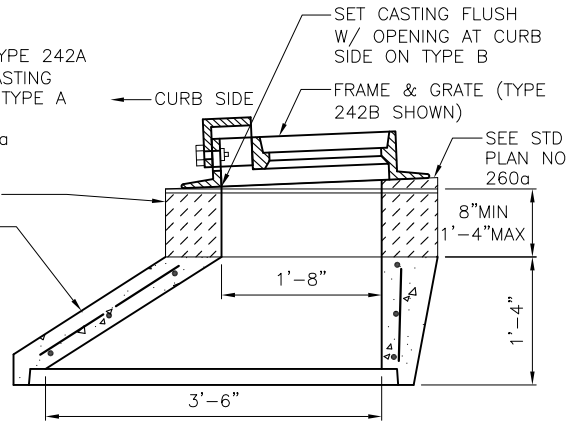

TYPE B
SECTION A–A

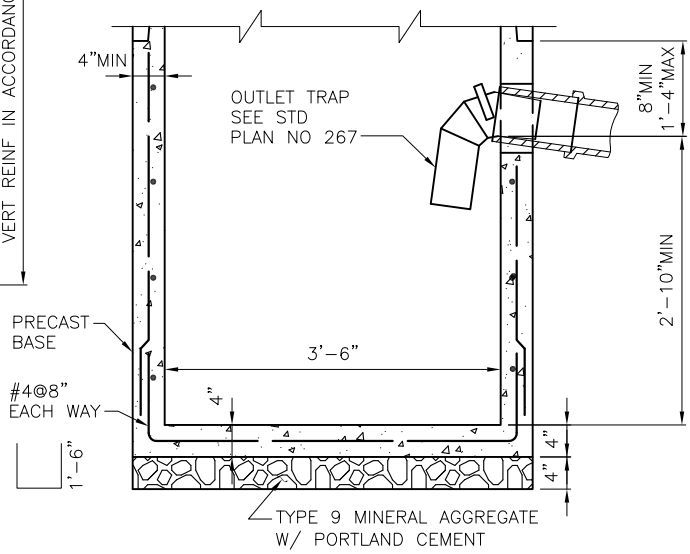

TYPE A & B
SECTION B–B

REF STD SPEC SEC 7-05

City of Seattle	NOT TO SCALE	TYPE 242 CATCH BASIN

REV DATE: SEP 2015

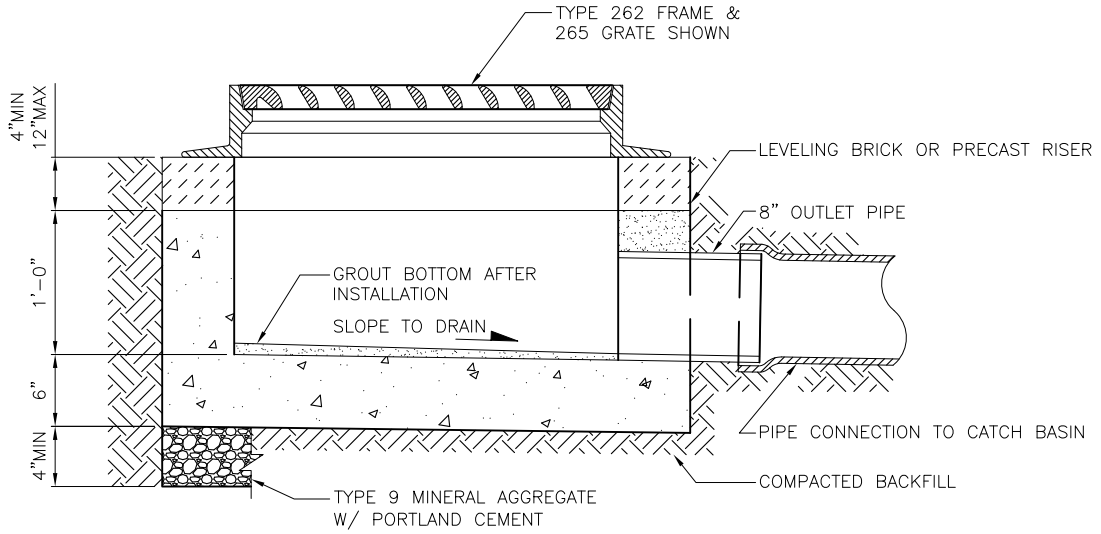

SECTION A–A

INLET TYPE	CASTING	
	FRAME	GRATE
250A	NO 262	NO 265
250B	NO 263A	NO 265

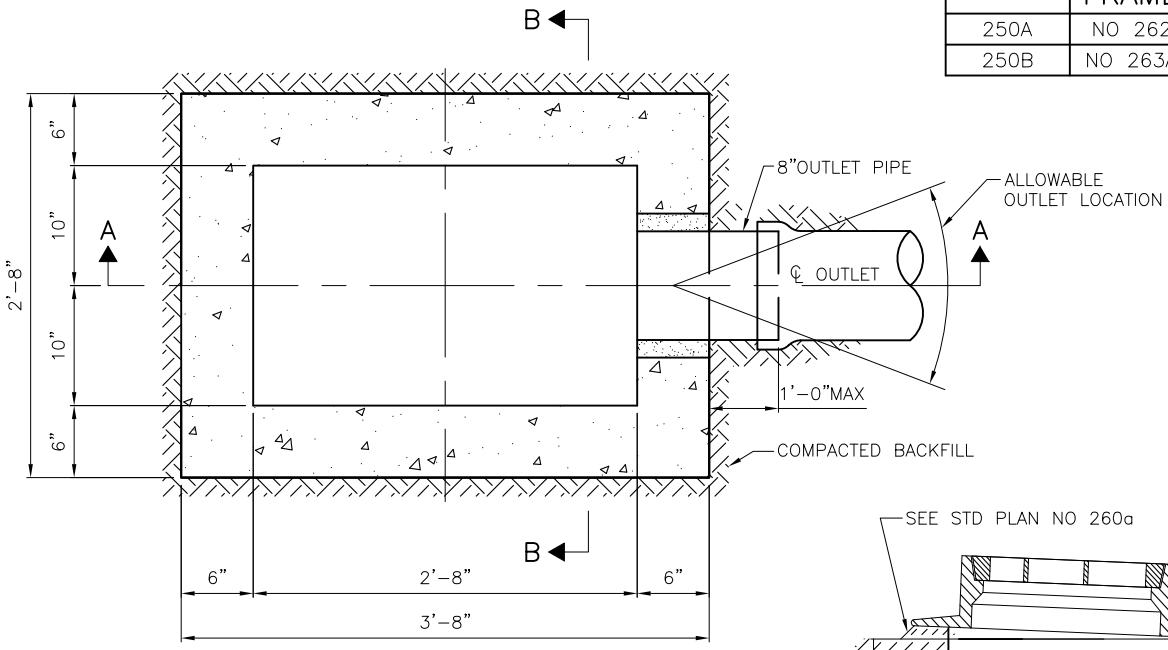

PLAN VIEW

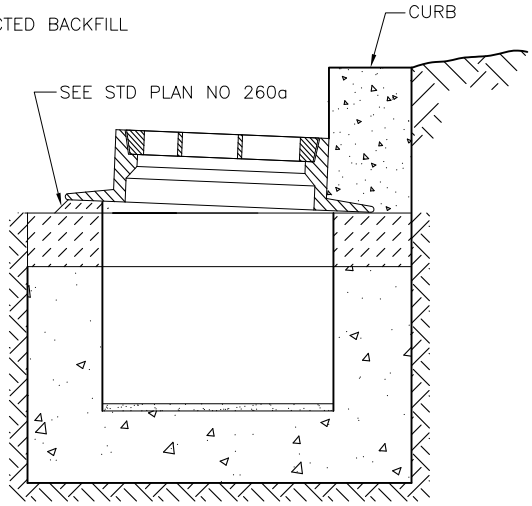

SECTION B–B
TYPE A ONLY

REF STD SPEC SEC 7-05

City of Seattle	NOT TO SCALE	TYPE 250 INLET

REV DATE: SEP 2015

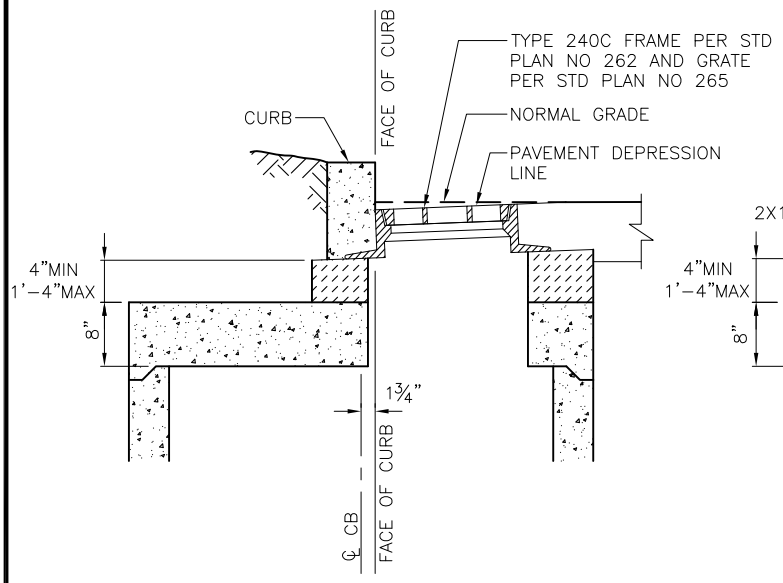

TYPE 240C CB

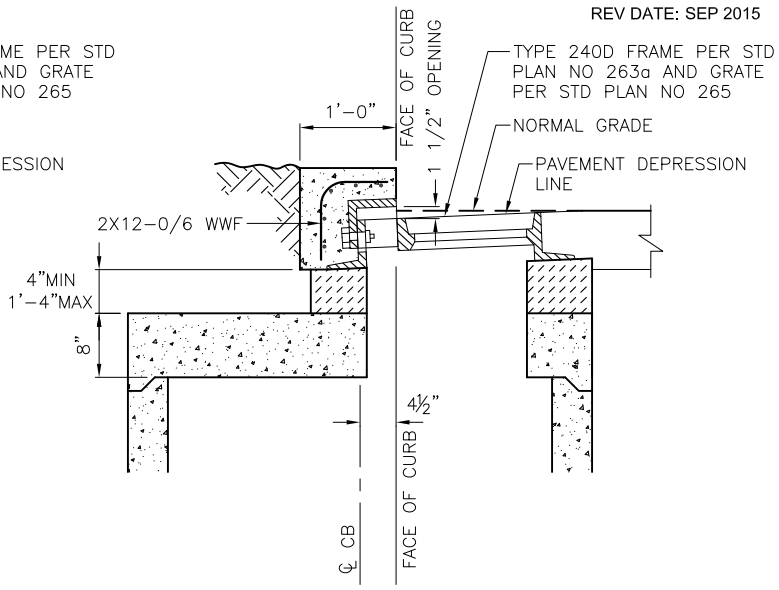

TYPE 240D CB

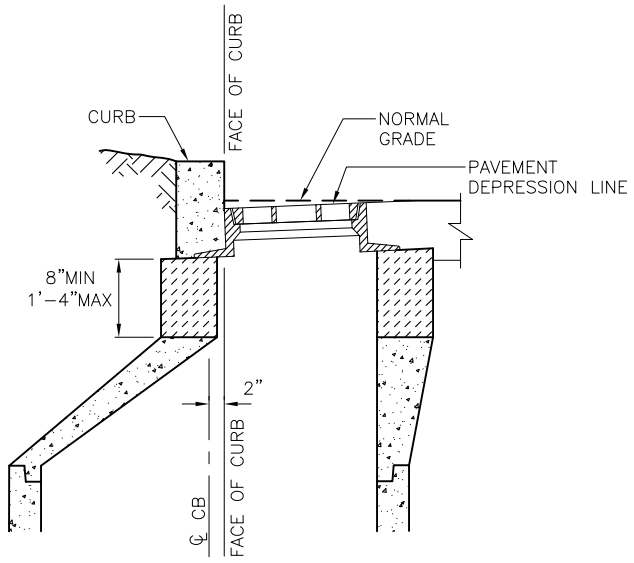

TYPE 242A CB
(TYPE 250A INLET SIMILAR)

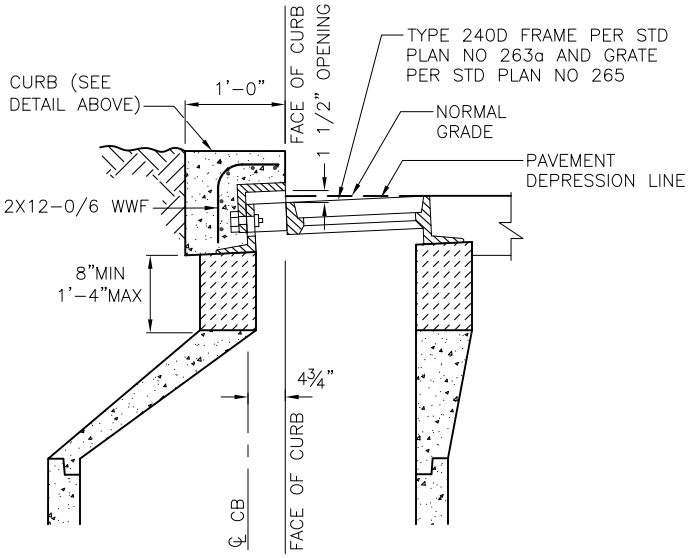

TYPE 242B CB
(TYPE 250B INLET SIMILAR)

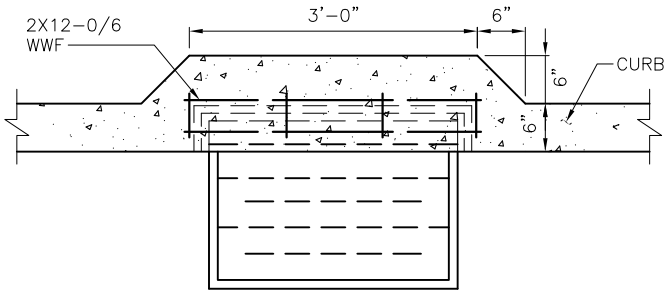

CURB DETAIL (PLAN VIEW) FOR
TYPE 240D & 242B CB & TYPE 250B INLET

REF STD SPEC SEC 7-05

City of Seattle	NOT TO SCALE	CATCH BASIN & INLET INSTALLATION

REV DATE: DEC 2015

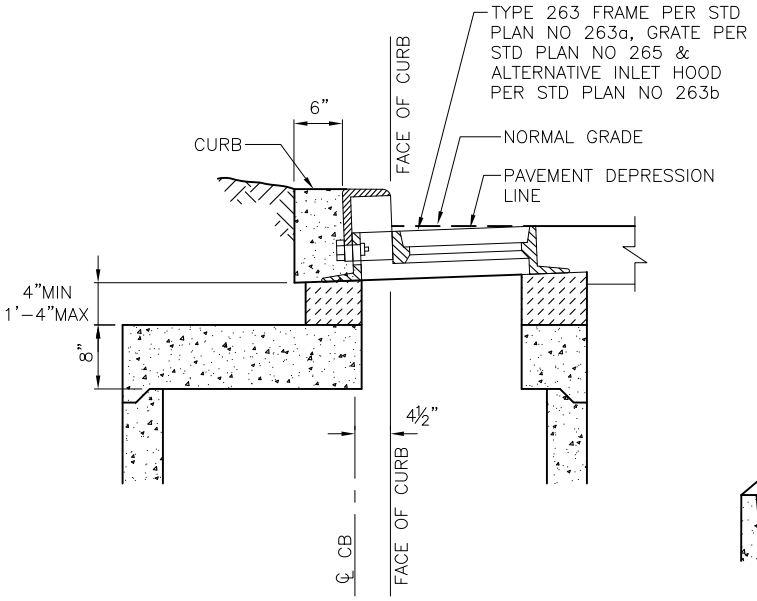

TYPE 240C CB

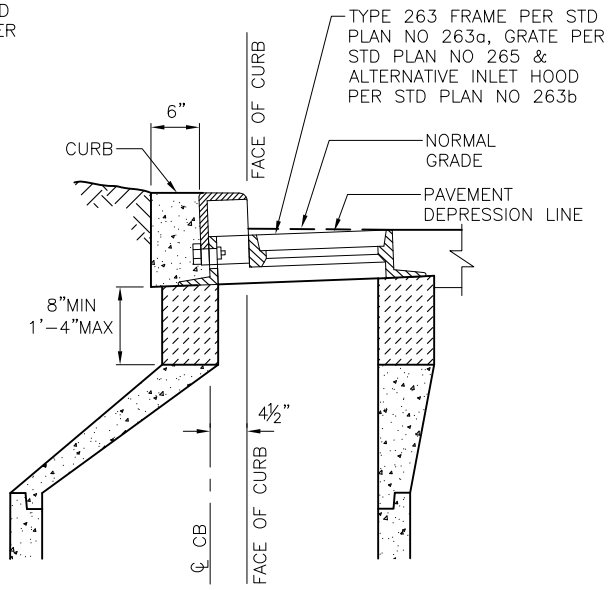

TYPE 242A CB

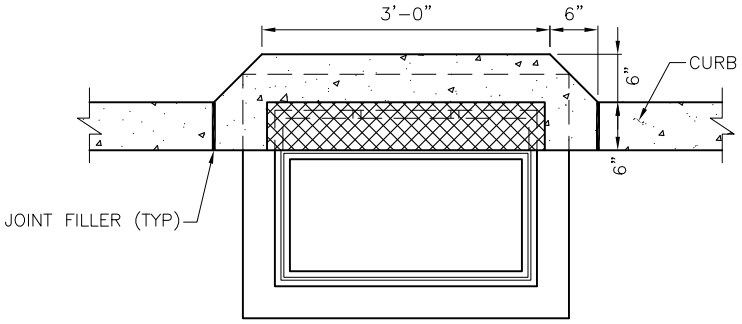

CURB DETAIL (PLAN VIEW) FOR
TYPE 240D & 242C CB & TYPE 250B INLET

REF STD SPEC SEC 7-05

City of Seattle	NOT TO SCALE	CATCH BASIN & INLET INSTALLATION WITH ALTERNATIVE HOOD 263B

REV DATE: FEB 2015

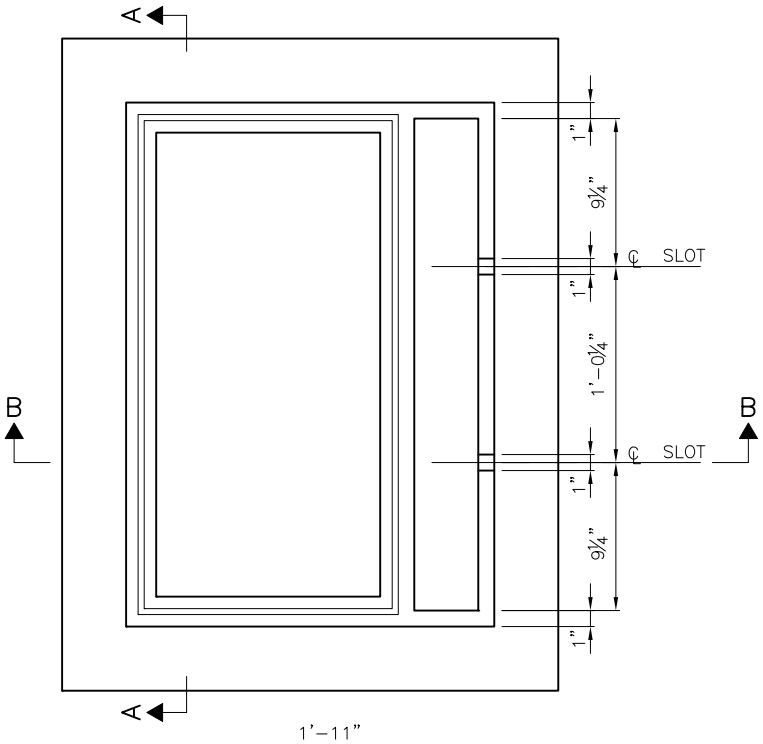

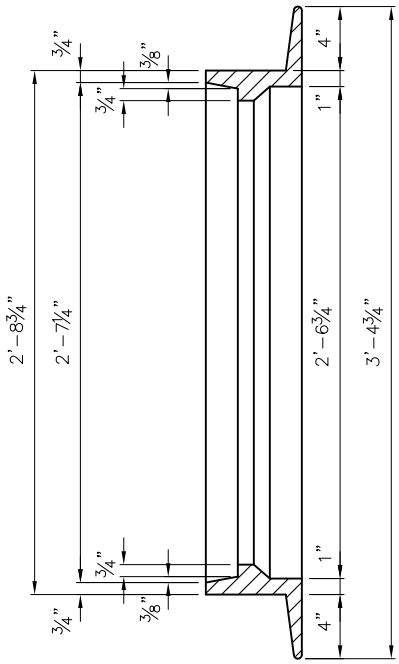

SECTION A–A

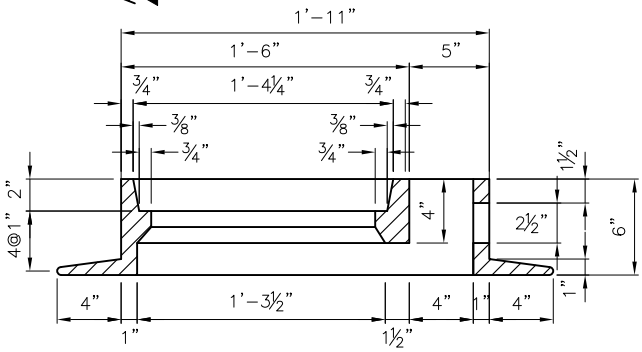

SECTION B–B

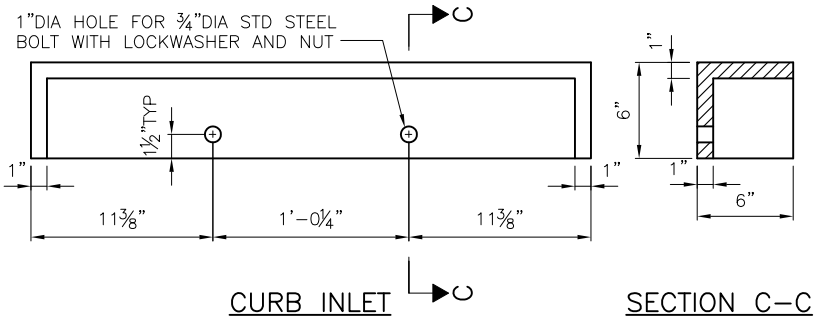

CURB INLET

SECTION C–C

REF STD SPEC SEC 9-12

City of Seattle	NOT TO SCALE	TYPE 263 INLET FRAME AND HOOD

REV DATE: DEC 2015

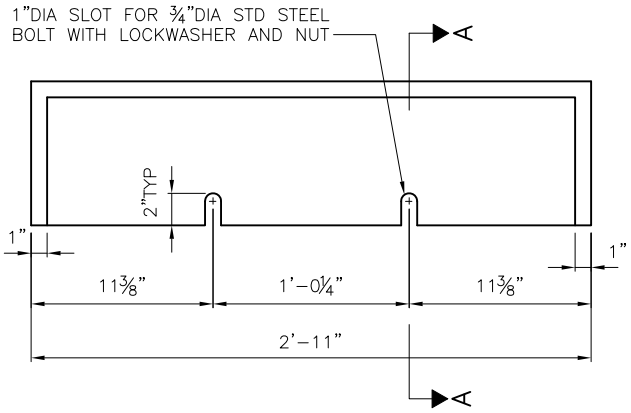

CURB INLET

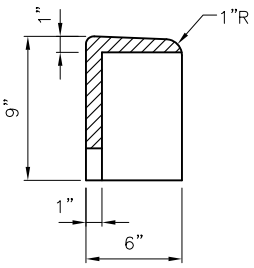

SECTION A–A

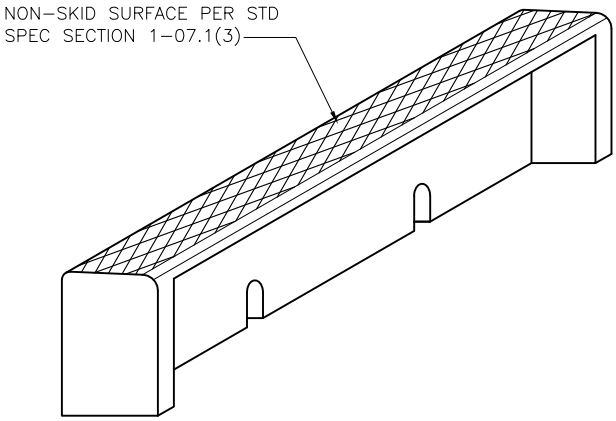

REF STD SPEC SEC 9-12

City of Seattle	NOT TO SCALE	TYPE 263 ALTERNATIVE INLET HOOD

REV DATE: MAY 2015

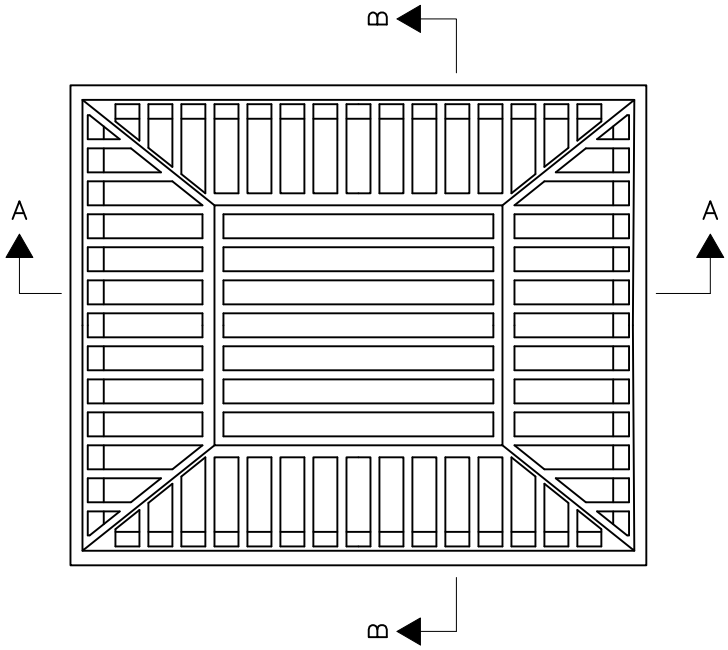

GRATE

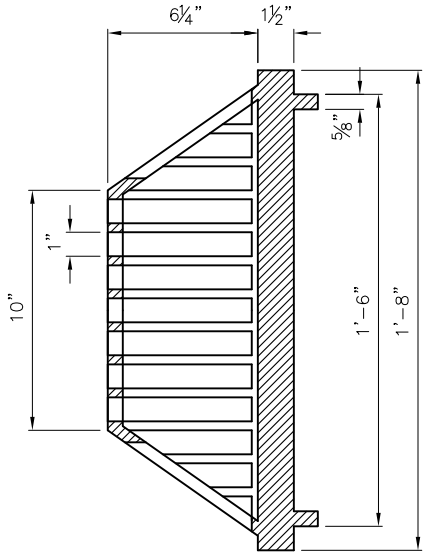

SECTION B–B

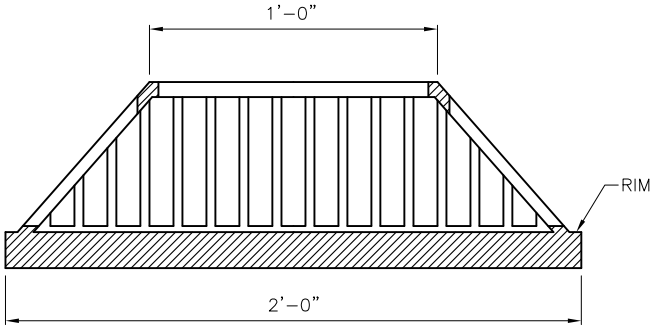

SECTION A–A

NOTES:
1. GRATE MATERIAL: DUCTILE IRON
2. FRAME PER STD PLAN NO 264

REF STD SPEC SEC 9-12

City of Seattle	NOT TO SCALE	BEEHIVE GRATE FOR BIORETENTION

REV DATE: JAN 2016

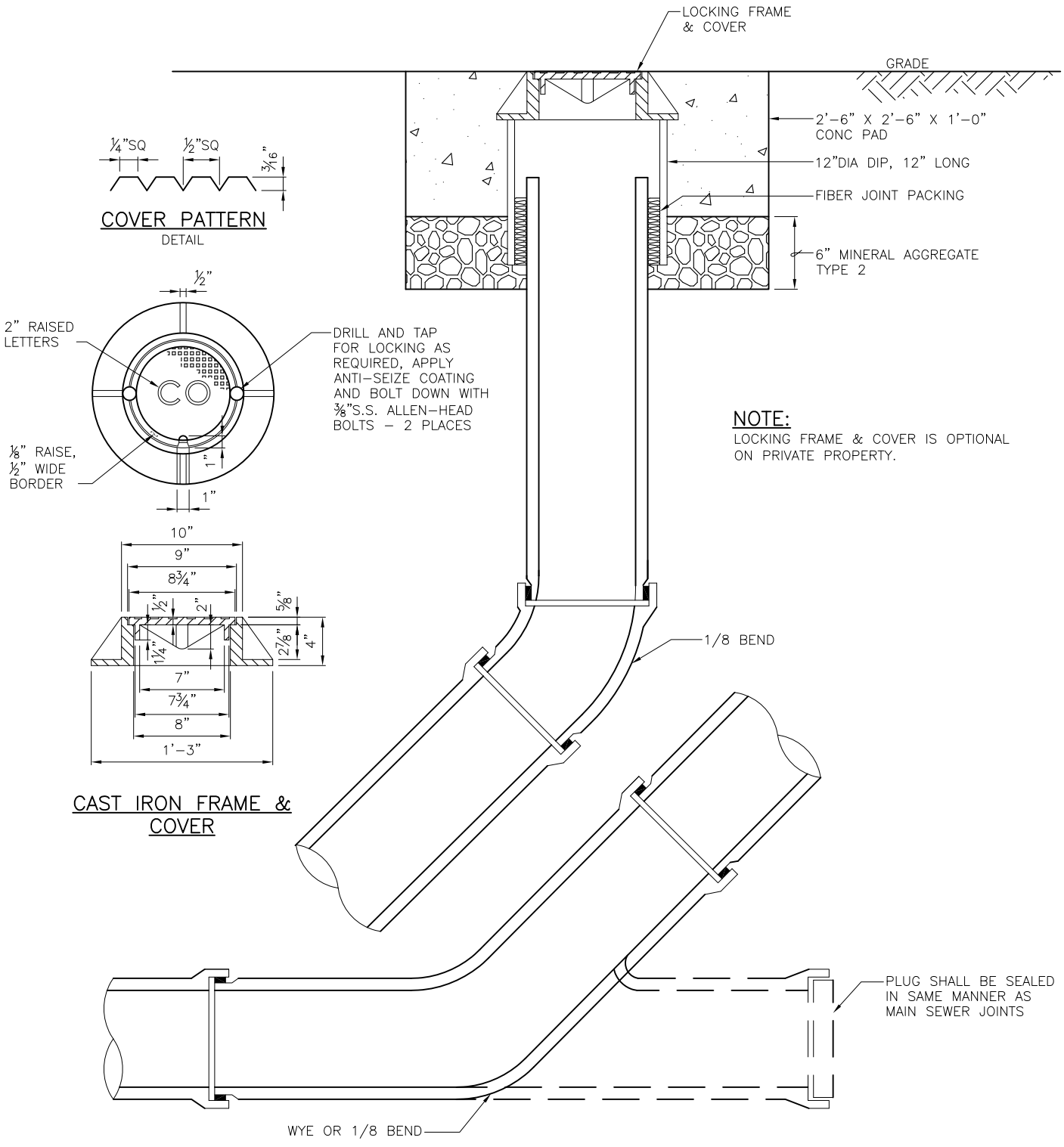

REF STD SPEC SEC 7-19

City of Seattle	NOT TO SCALE	8" CLEAN-OUT

REV DATE: MAY 2014

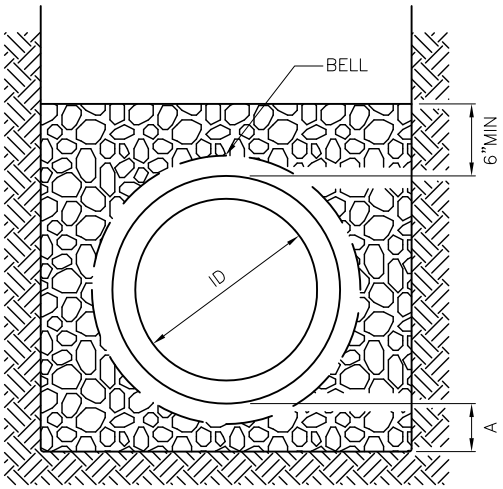

CLASS B BEDDING

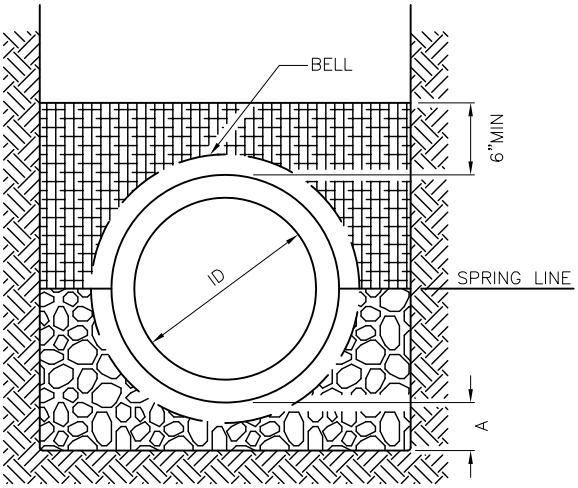

CLASS C BEDDING

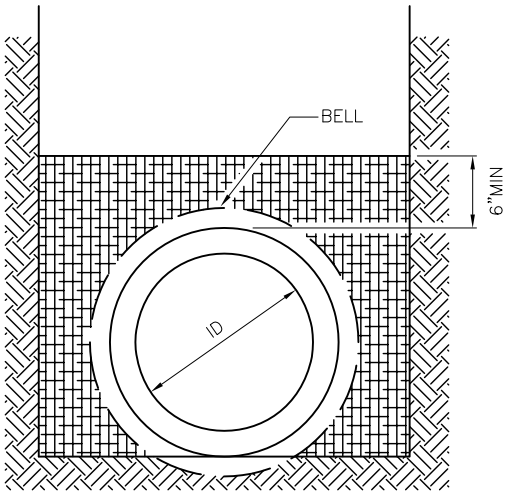

CLASS D BEDDING

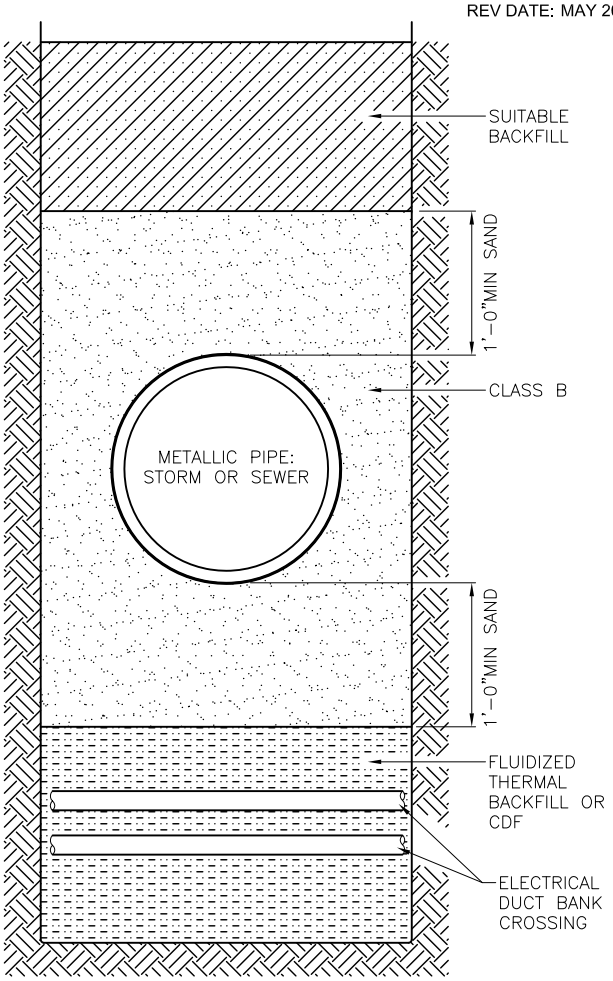

SAND BEDDING AT TRENCH CROSSING OF METAL PIPE

AT METALLIC PIPE CROSSING OF FLUIDIZED THERMAL BACKFILL OR CDF CONDUIT CROSSINGS

- MINERAL AGGREGATE PER STD SPEC 9-03.16 TYPE 9 FOR DUCTILE IRON WHEN APPLICABLE OR CONCRETE PIPE TYPE 22 FOR VITRIFIED CLAY AND FLEXIBLE PIPE
- SELECTED NATIVE MATERIAL PER STD SPEC 2-10.2(1)
- SUITABLE BACKFILL
- FLUIDIZED THERMAL BACKFILL PER SCL MATERIAL STD 7150.00 OR CDF (SEE CONTRACT DRAWINGS)
- MINERAL AGGREGATE PER STD SPEC 9-03.16, TYPE 6 OR TYPE 7

NOTES:

1. FOR TRENCH WIDTH SEE STD PLAN NO 284
2. A=4"WHEN ID IS LESS THAN 2'-6", A=6"WHEN ID IS 2'-6"OR MORE.
3. UNIFORMLY SUPPORT PIPE BARREL. EXCAVATE HOLES FOR BELLS AND COUPLING.

REF STD SPEC SEC 2-10.2, 7-11, 7-17, 9-03.16

City of Seattle	NOT TO SCALE	PIPE BEDDING SEWER/STORM DRAIN

REV DATE: DEC 2015

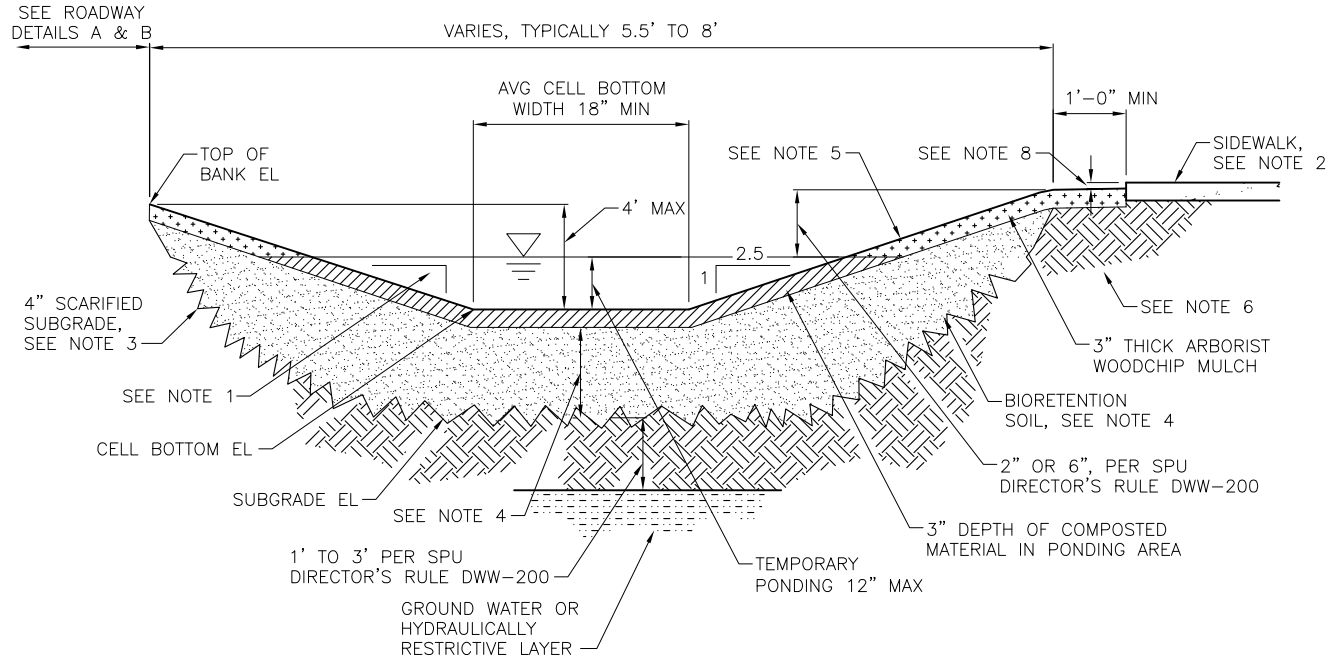

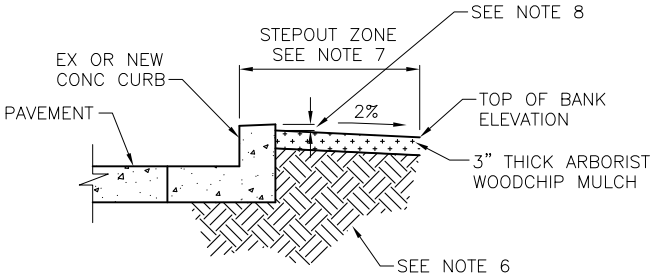

DETAIL A
CURBED ROADWAY
(ADJACENT TO PARKING ZONE)

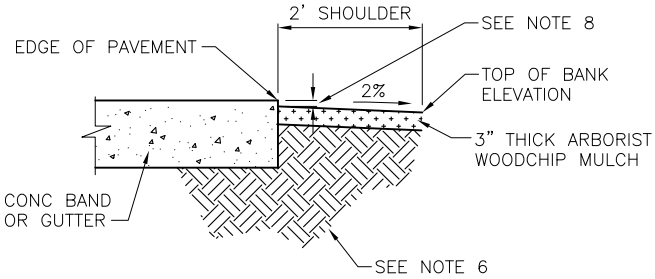

DETAIL B
CURBLESS ROADWAY

NOTES:

1. TYPICAL MAXIMUM SLOPE ALLOWED IS 2.5H=1V, 3H=1V MAX WHEN WITHIN 50-FEET OF INTERSECTIONS OR CURBLESS ROADWAY.
2. BIORETENTION OVERFLOW ELEVATIONS MUST BE SET BELOW SIDEWALK ELEVATION.
3. SCARIFY SUBGRADE 4" MIN IN THE AREA SUBJECT TO TEMPORARY PONDING BEFORE BIORETENTION SOIL INSTALLATION.
4. PROVIDE 1.5' MIN BIORETENTION SOIL FOR WATER QUALITY TREATMENT PER STORMWATER CODE REQUIREMENT.
5. CELL SHALL BE PLANTED PER APPROVED LANDSCAPE PLAN.
6. SOIL AT THE EDGE SHALL BE UNDISTURBED NATIVE SOIL OR APPROVED SOIL COMPACTED TO 95% DENSITY.
7. FACE OF CURB TO TOP OF SLOPE SHALL BE MIN 2'-0" FOR NON-MAJOR ARTERIAL STREET, MIN 4'-0" FOR MAJOR ARTERIAL STREET.
8. PROVIDE MIN ONE INCH GAP BETWEEN TOP OF WALKS, CURBS, PAVEMENTS AND DRIVEWAYS AND TOP OF ARBORIST WOODCHIP MULCH.

REF STD SPEC SEC 7-21

City of Seattle	NOT TO SCALE	INFILTRATING BIORETENTION WITH SLOPED SIDES

REV DATE: DEC 2015

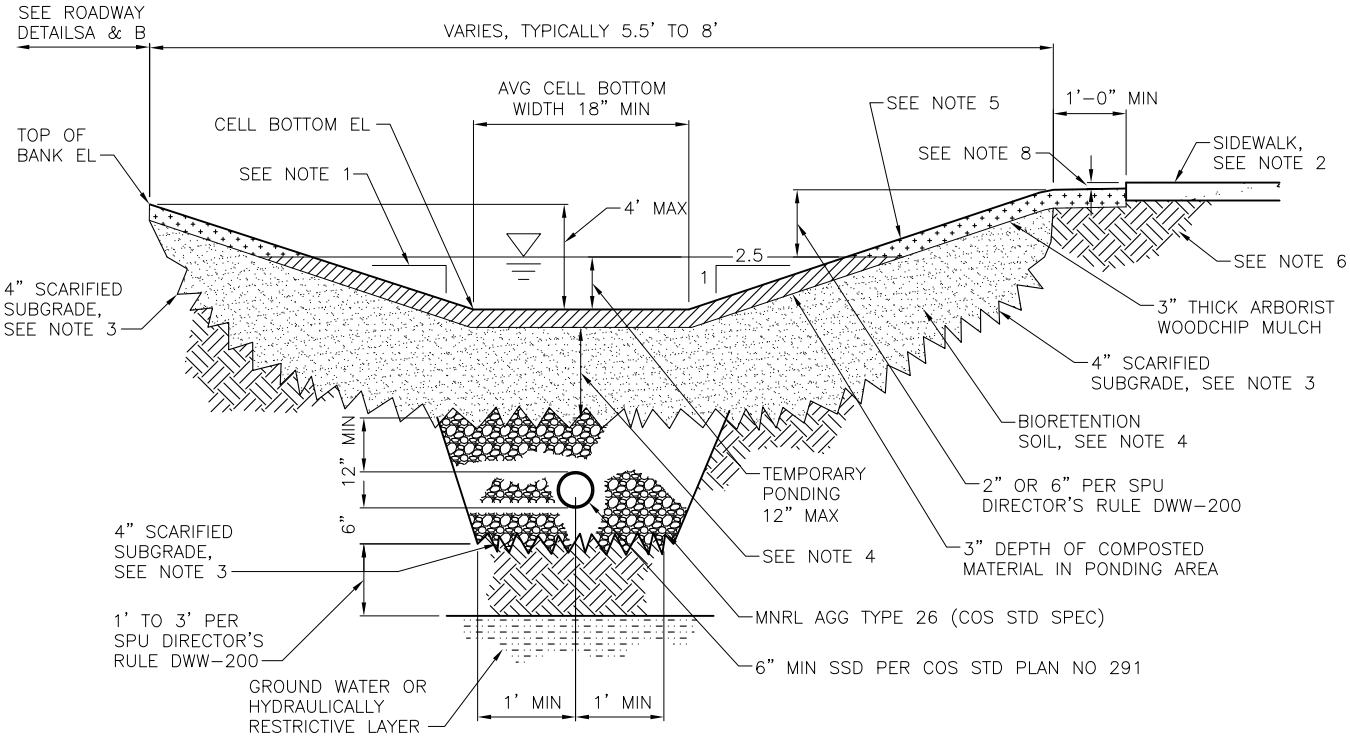

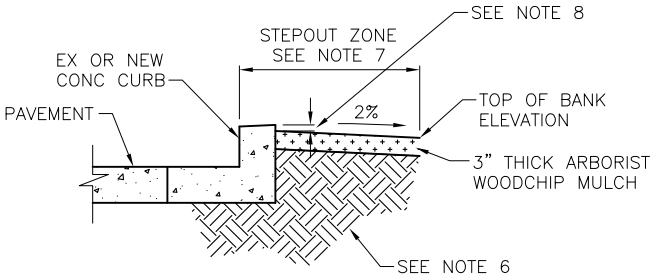

DETAIL A
CURBED ROADWAY
(ADJACENT TO PARKING ZONE)

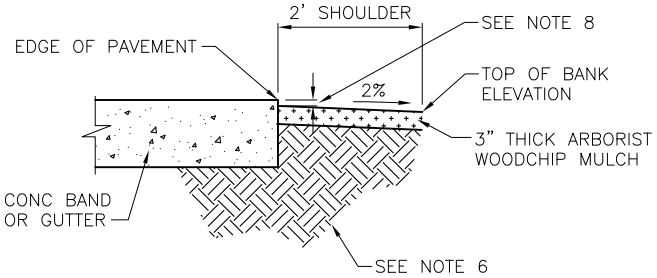

DETAIL B
CURBLESS ROADWAY

NOTES:

1. TYPICAL MAXIMUM SLOPE ALLOWED IS 2.5H=1V, 3H=1V MAX WHEN WITHIN 50-FEET OF INTERSECTIONS OR CURBLESS ROADWAY.
2. BIORETENTION OVERFLOW ELEVATIONS MUST BE SET BELOW SIDEWALK ELEVATION.
3. SCARIFY SUBGRADE 4" MIN IN THE AREA SUBJECT TO TEMPORARY PONDING BEFORE BIORETENTION SOIL INSTALLATION.
4. PROVIDE 1.5' MIN BIORETENTION SOIL FOR WATER QUALITY TREATMENT PER STORMWATER CODE REQUIREMENT.
5. CELL SHALL BE PLANTED PER APPROVED LANDSCAPE PLAN.
6. SOIL AT THE EDGE SHALL BE UNDISTURBED NATIVE SOIL OR APPROVED SOIL COMPACTED TO 95% DENSITY.
7. FACE OF CURB TO TOP OF SLOPE SHALL BE MIN 2'-0" FOR NON-MAJOR ARTERIAL STREET, MIN 4'-0" FOR MAJOR ARTERIAL STREET.
8. PROVIDE MIN ONE INCH GAP BETWEEN TOP OF WALKS, CURBS, PAVEMENTS AND DRIVEWAYS AND TOP OF ARBORIST WOODCHIP MULCH.

REF STD SPEC SEC 7-21

City of Seattle	NOT TO SCALE	INFILTRATING BIORETENTION WITH SLOPED SIDES & UNDER DRAIN

REV DATE: DEC 2015

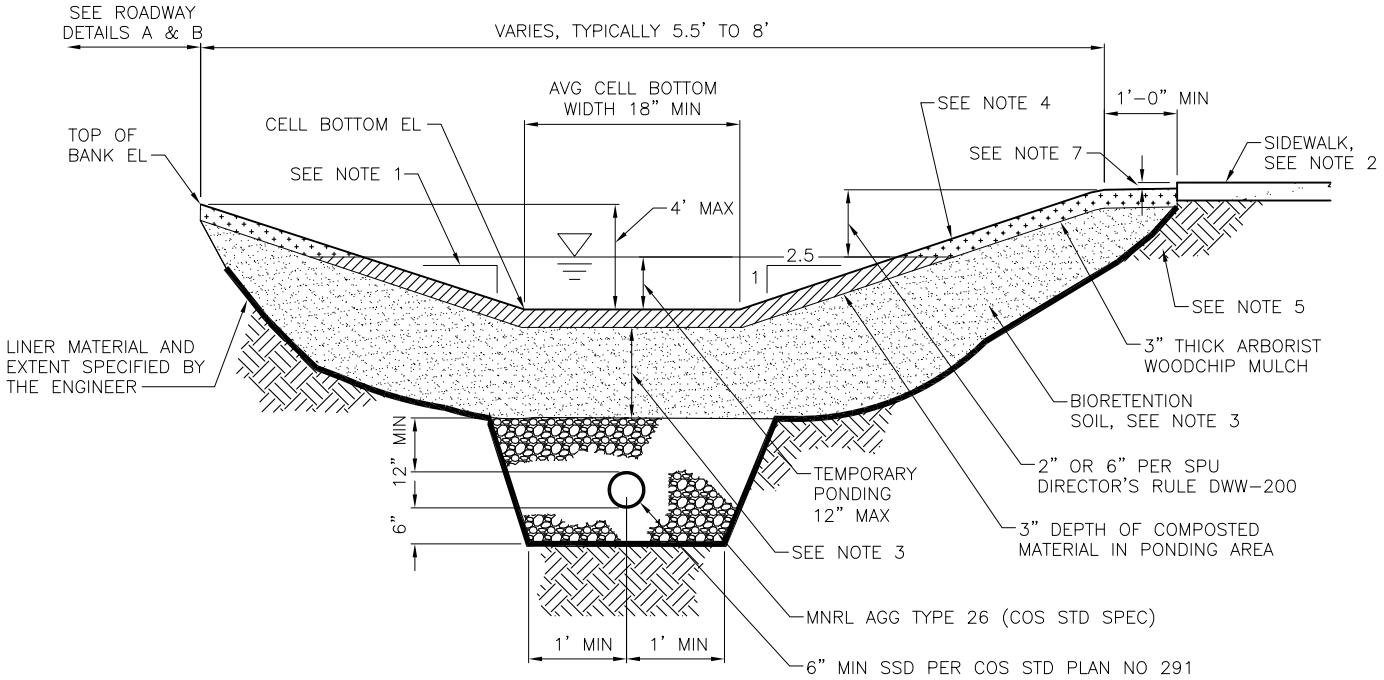

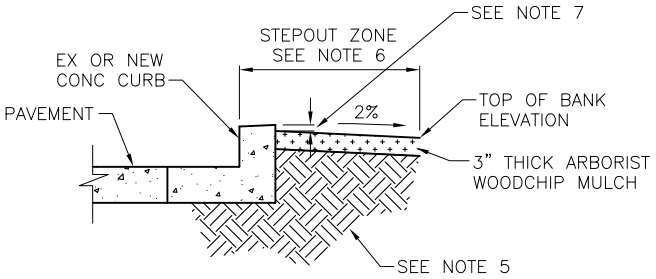

DETAIL A
CURBED ROADWAY
(ADJACENT TO PARKING ZONE)

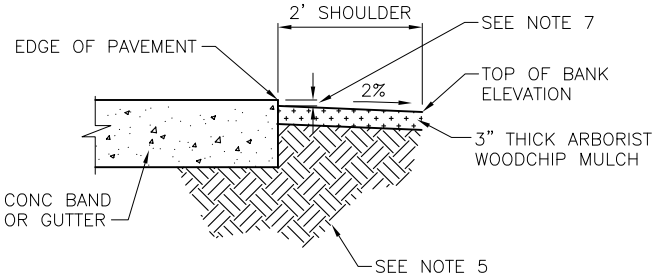

DETAIL B
CURBLESS ROADWAY

NOTES:

1. TYPICAL MAXIMUM SLOPE ALLOWED IS 2.5H=1V, 3H=1V MAX WHEN WITHIN 50-FEET OF INTERSECTIONS OR CURBLESS ROADWAY.
2. BIORETENTION OVERFLOW ELEVATIONS MUST BE SET BELOW SIDEWALK ELEVATION.
3. PROVIDE 1.5' MIN BIORETENTION SOIL FOR WATER QUALITY TREATMENT PER STORMWATER CODE REQUIREMENT.
4. CELL SHALL BE PLANTED PER APPROVED LANDSCAPE PLAN.
5. SOIL AT THE EDGE SHALL BE UNDISTURBED NATIVE SOIL OR APPROVED SOIL COMPACTED TO 95% DENSITY.
6. FACE OF CURB TO TOP OF SLOPE SHALL BE MIN 2'-0" FOR NON-MAJOR ARTERIAL STREET, MIN 4'-0" FOR MAJOR ARTERIAL STREET.
7. PROVIDE MIN ONE INCH GAP BETWEEN TOP OF WALKS, CURBS, PAVEMENTS AND DRIVEWAYS AND TOP OF ARBORIST WOODCHIP MULCH.

REF STD SPEC SEC 7-21

City of Seattle	NOT TO SCALE	NON-INFILTRATING BIORETENTION WITH SLOPED SLIDES & UNDER DRAIN

REV DATE: DEC 2015

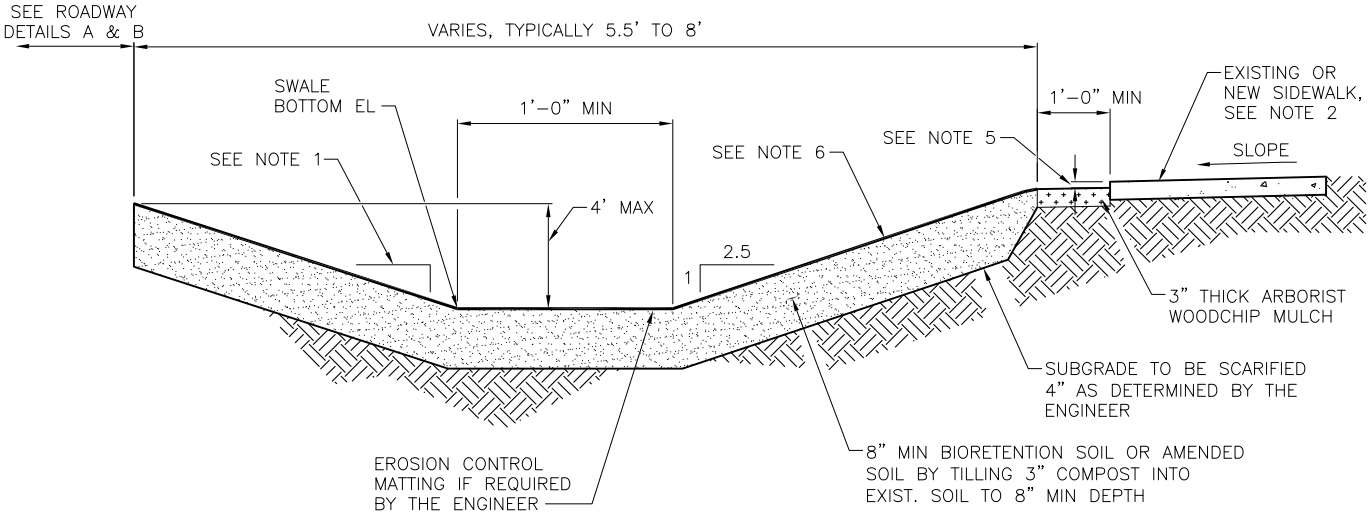

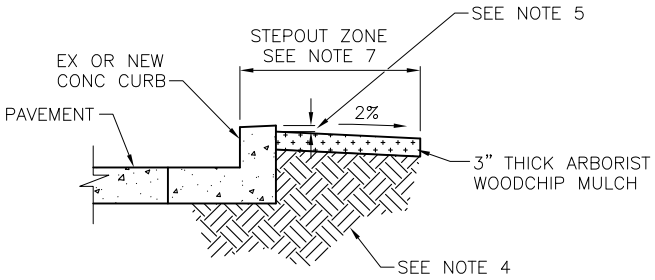

DETAIL A
CURBED ROADWAY
(ADJACENT TO PARKING ZONE)

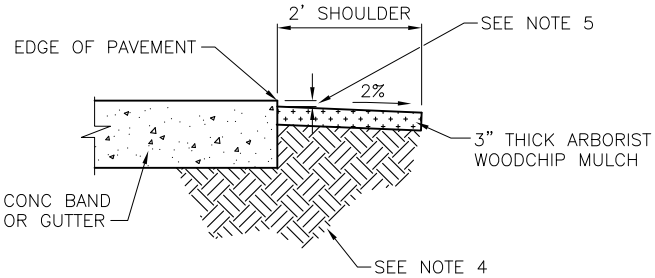

DETAIL B
CURBLESS ROADWAY

NOTES:

1. TYPICAL MAXIMUM SLOPE ALLOWED IS 2.5H=1V, 3H=1V MAX WHEN WITHIN 50-FEET OF INTERSECTIONS OR CURBLESS ROADWAY.
2. CONVEYANCE SWALE OVERFLOW ELEVATIONS MUST BE SET BELOW SIDEWALK ELEVATION.
3. LONGITUDINAL SLOPE GREATER THAN OR EQUAL TO 4%, CHECK DAM REQUIRED.
4. UNDISTURBED NATIVE SOIL OR APPROVED SOIL COMPACTED TO 95% DENSITY.
5. PROVIDE MIN ONE INCH GAP BETWEEN TOP OF WALKS, CURBS, PAVEMENTS AND DRIVEWAYS AND TOP OF TREATMENT LAYER.
6. PLANTING PER APPROVED LANDSCAPE PLAN.
7. FACE OF CURB TO TOP OF SLOPE SHALL BE MIN 2'-0" FOR NON-MAJOR ARTERIAL STREETS, MIN 4'-0" FOR MAJOR ARTERIAL STREETS.

REF STD SPEC SEC 7-21

City of Seattle	NOT TO SCALE	VEGETATED CONVEYANCE SWALE (NOT FOR WATER QUALITY TREATMENT)

REV DATE: DEC 2015

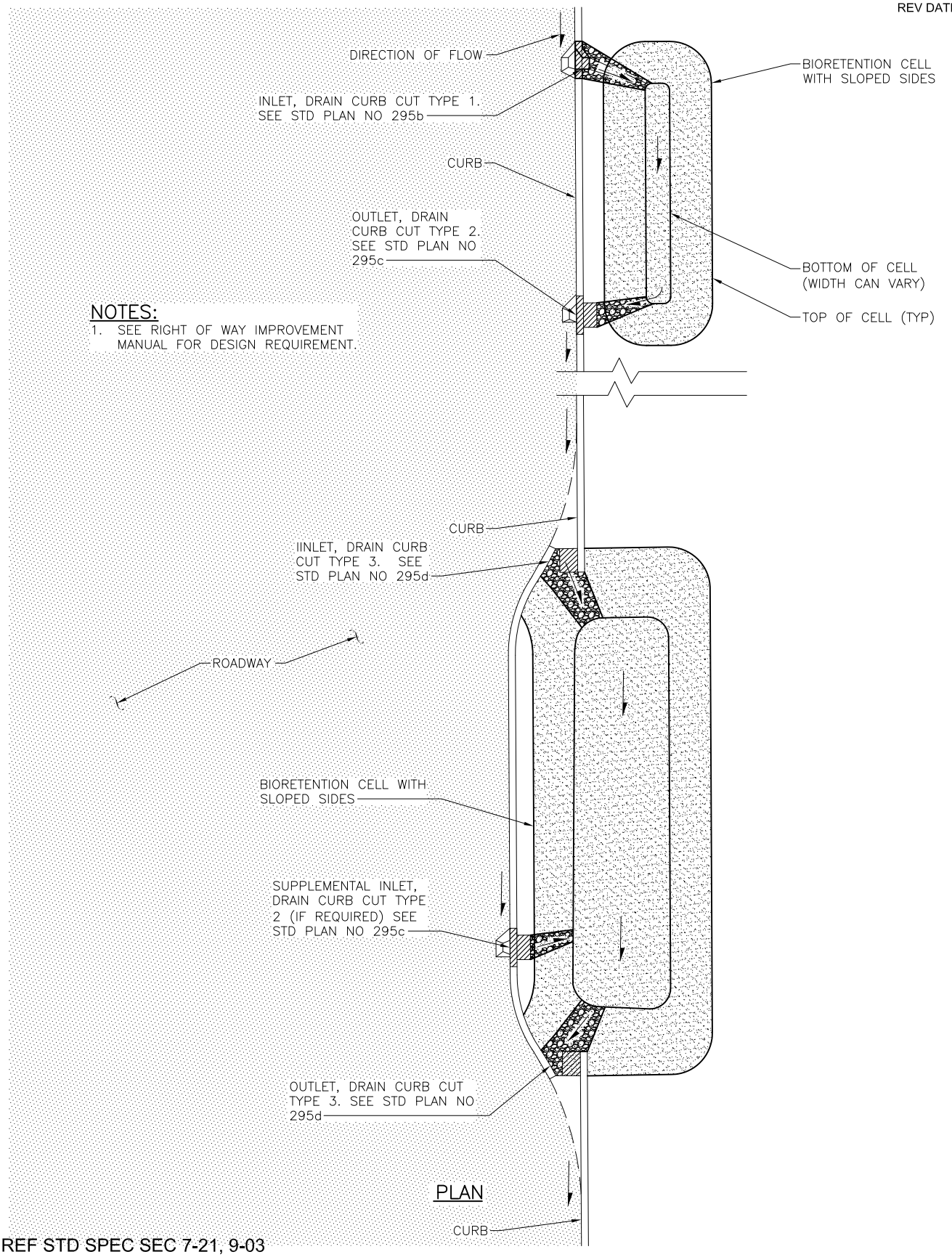

NOTES:

1. SEE RIGHT OF WAY IMPROVEMENT MANUAL FOR DESIGN REQUIREMENT.

REF STD SPEC SEC 7-21, 9-03

City of Seattle	NOT TO SCALE	TYPICAL DRAIN CURB CUT LOCATION FOR BIORETENTION WITH SLOPED SIDES

REV DATE: DEC 2015

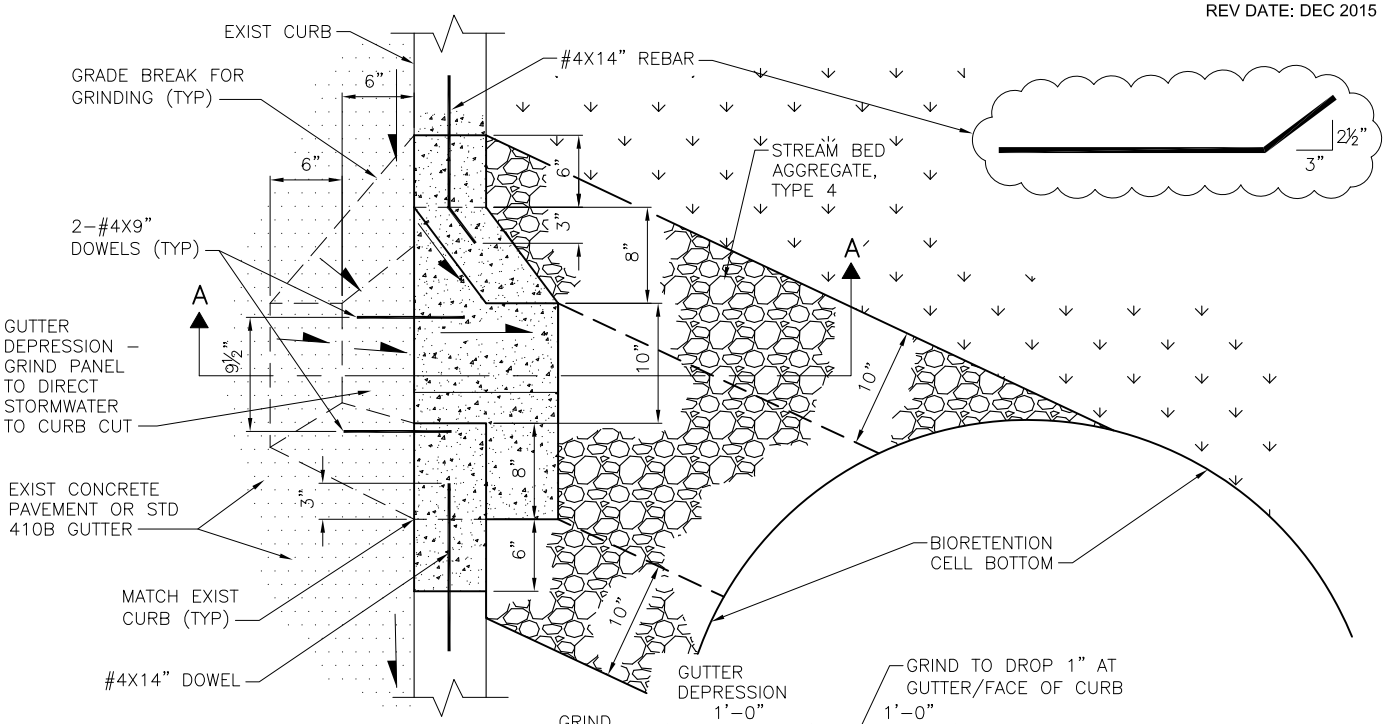

PLAN

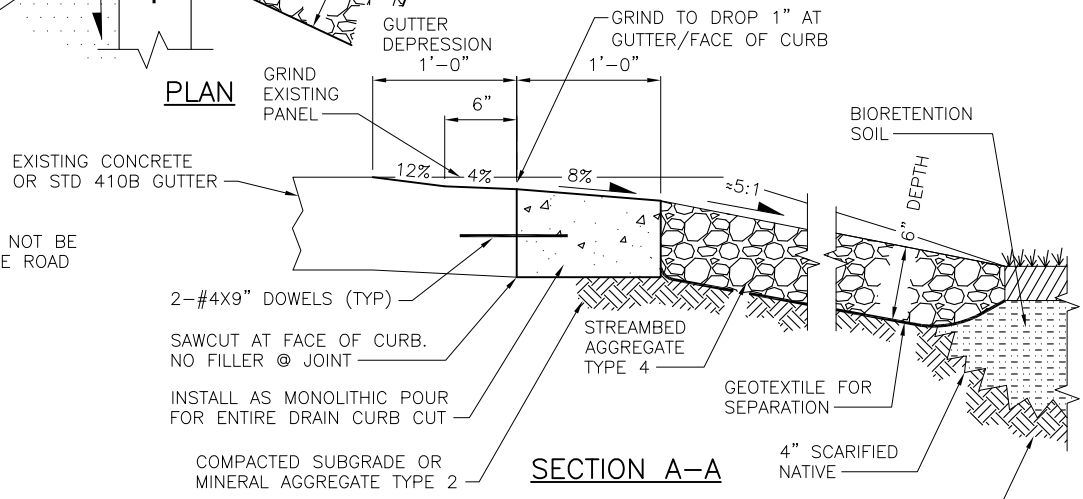

SECTION A–A

NOTES:

1. DRAIN CURB CUTS SHALL NOT BE LOCATED WITHIN CONCRETE ROAD PANEL JOINT.

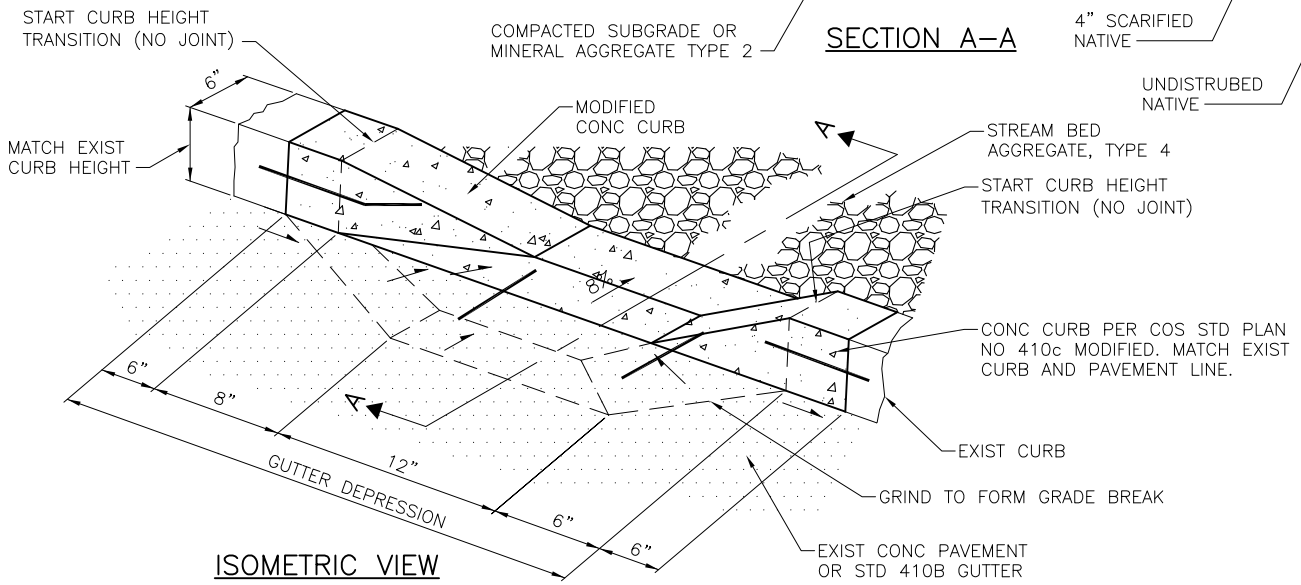

ISOMETRIC VIEW

REF STD SPEC SEC 7-21, 9-03

City of Seattle	NOT TO SCALE	DRAIN CURB CUT TYPE 1

REV DATE: DEC 2015

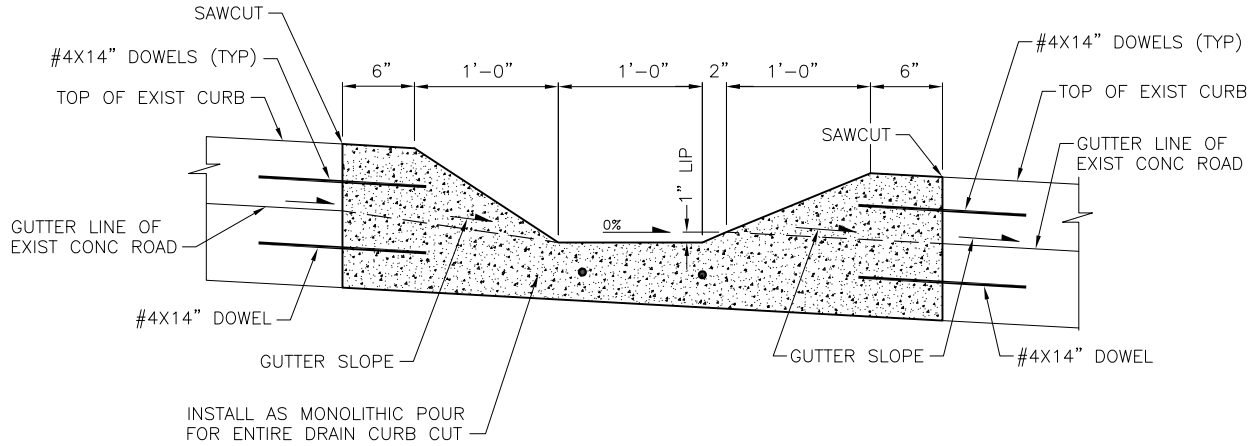

SECTION A–A

NOTES:

1. DRAIN CURB CUT SHALL NOT BE LOCATED WITHIN CONCRETE ROAD PANEL JOINT.

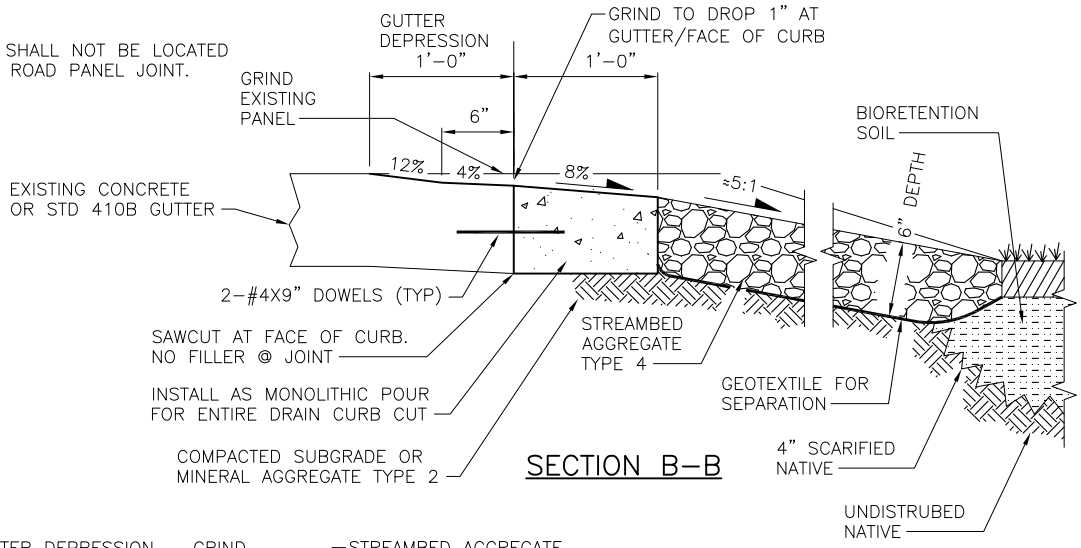

SECTION B–B

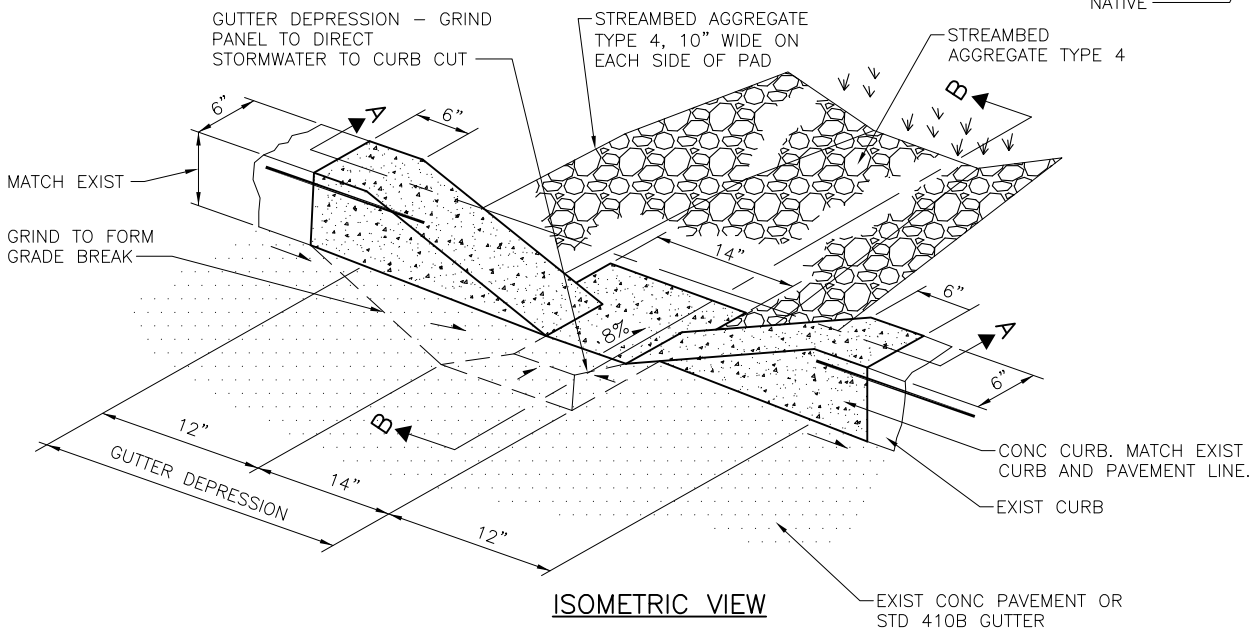

ISOMETRIC VIEW

REF STD SPEC SEC 7-21, 9-03

City of Seattle	NOT TO SCALE	DRAIN CURB CUT TYPE 2

REV DATE: DEC 2015

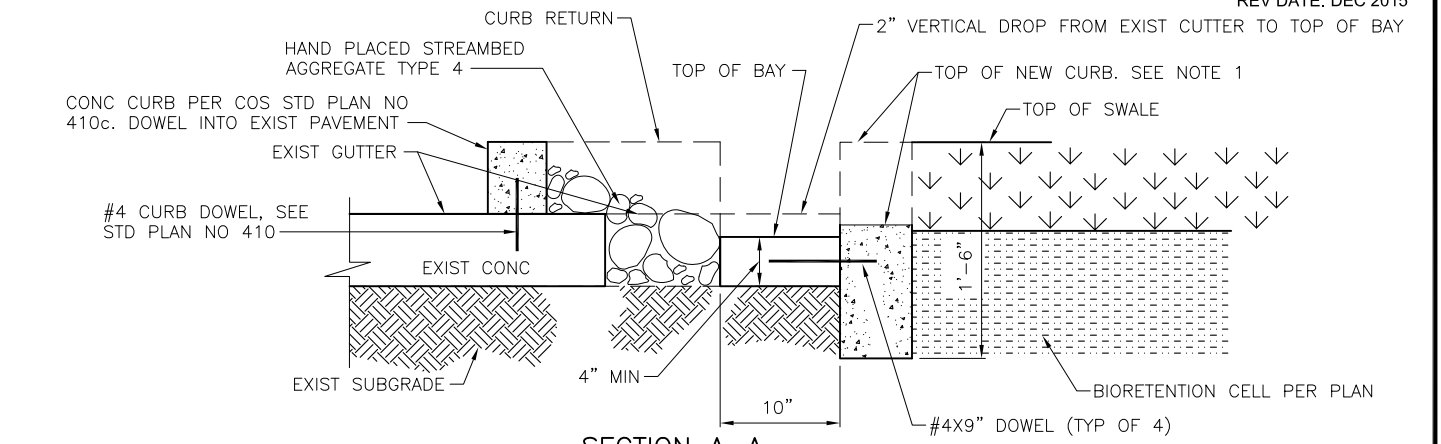

SECTION A–A

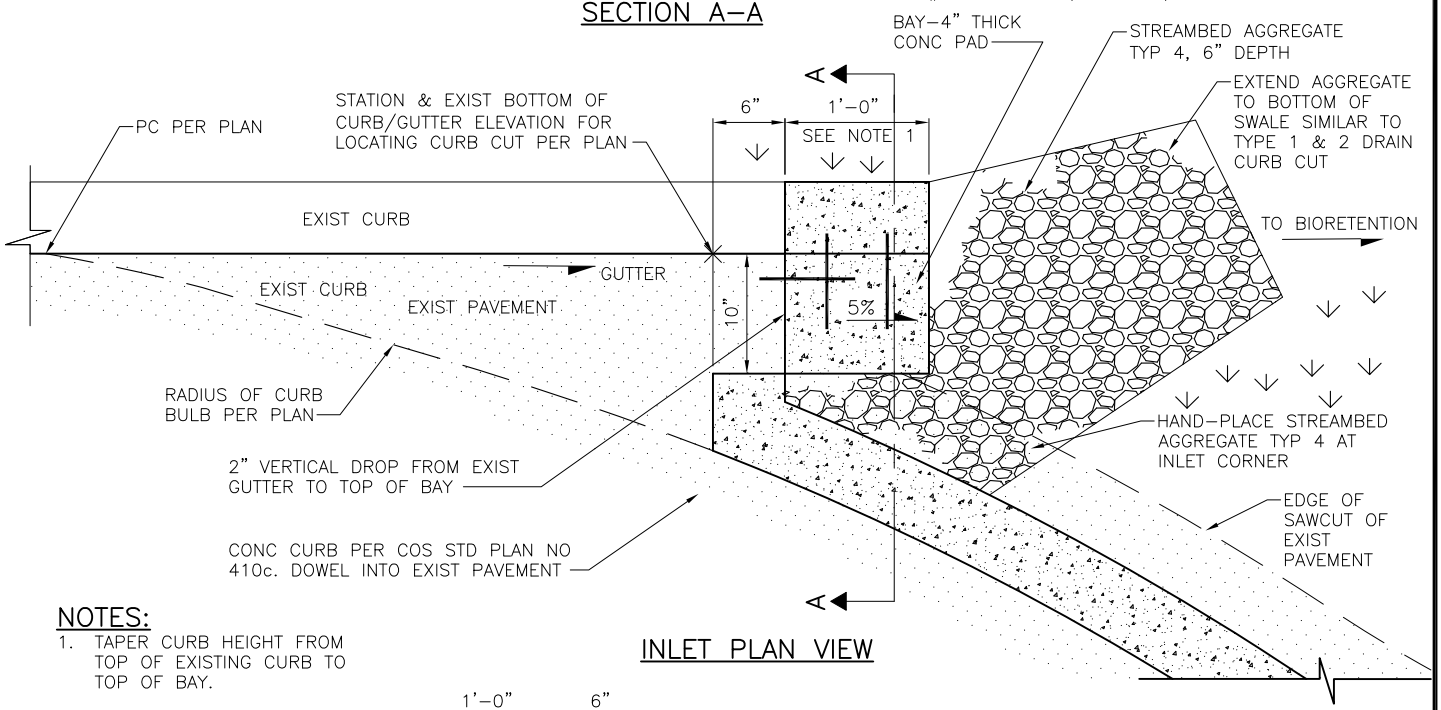

NOTES:

1. TAPER CURB HEIGHT FROM TOP OF EXISTING CURB TO TOP OF BAY.

INLET PLAN VIEW

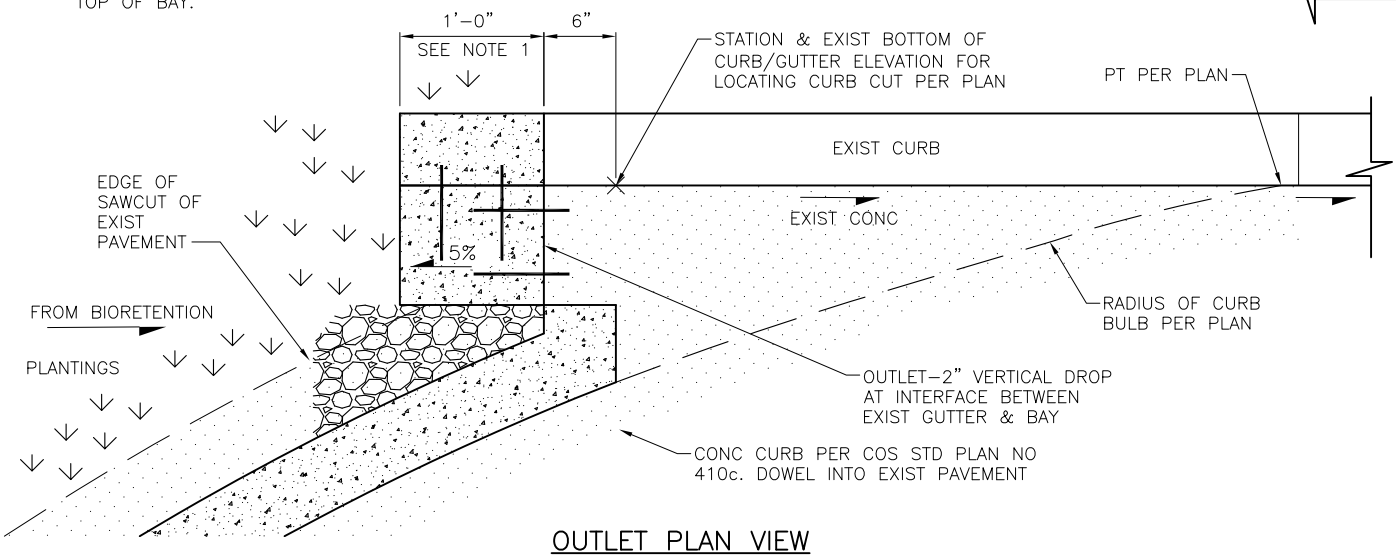

OUTLET PLAN VIEW

REF STD SPEC SEC 7-21, 9-03

City of Seattle	NOT TO SCALE	DRAIN CURB CUT TYPE 3

REV DATE: OCT 2015

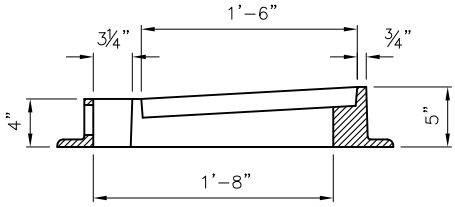

SECTION A–A

NOTES:

1. ATTACH THE HOOD TO THE FRAME WITH TWO ¾" X 2" HEX HEAD BOLTS, NUTS, AND OVERSIZE WASHERS. THE WASHERS SHALL HAVE DIAMETERS ADEQUATE TO ENSURE FULL BEARING ACROSS THE SLOTS.
2. ONLY DUCTILE IRON VANED GRATES SHALL BE USED.

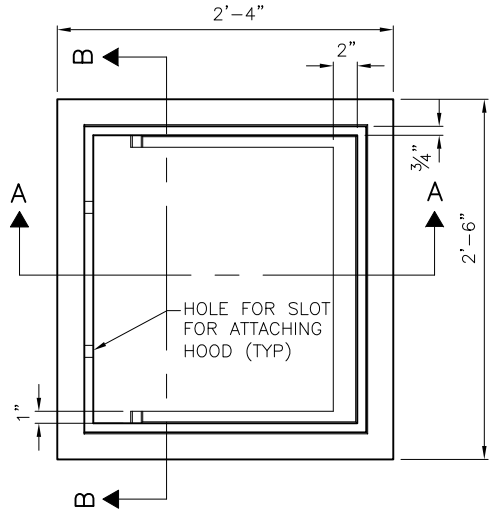

FRAME DETAIL

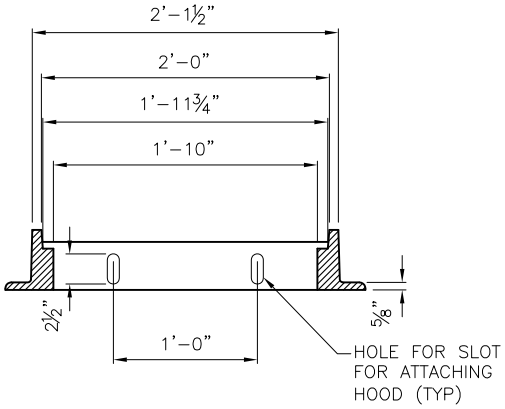

SECTION B–B

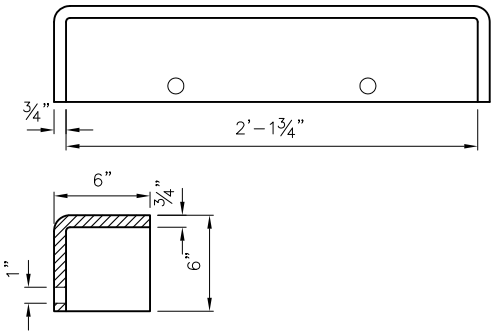

6" HOOD

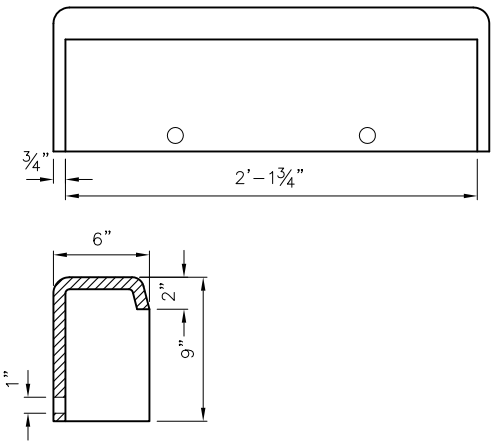

9" HOOD

REF STD SPEC SEC 7-05

City of Seattle	NOT TO SCALE	CURB INLET FRAME

REV DATE: OCT 2015

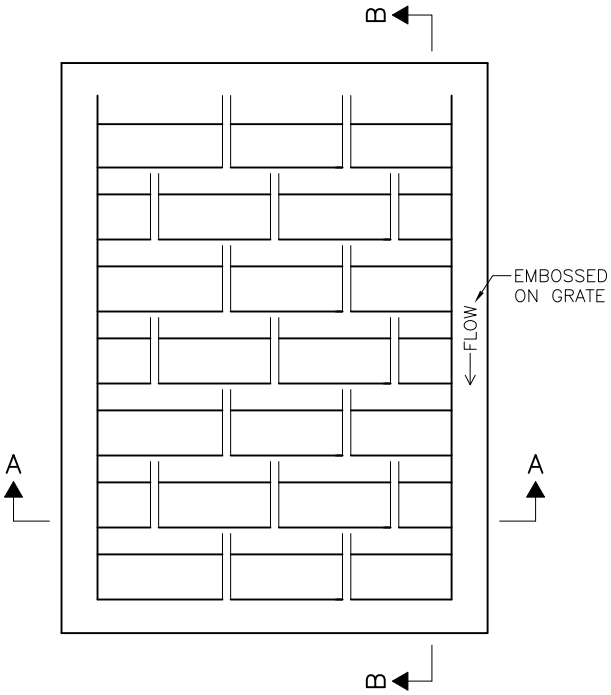

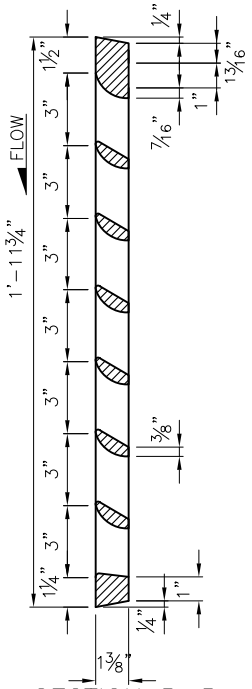

SECTION B–B

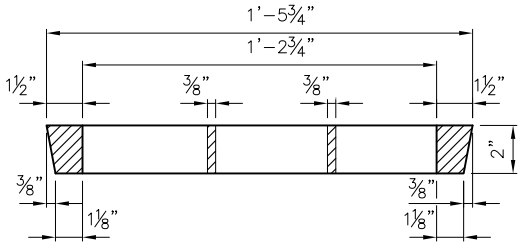

SECTION A–A

GRATE MATERIAL:
DUCTILE IRON

REF STD SPEC SEC

City of Seattle	NOT TO SCALE	CURB INLET VANED GRATE

REV DATE: DEC 2015

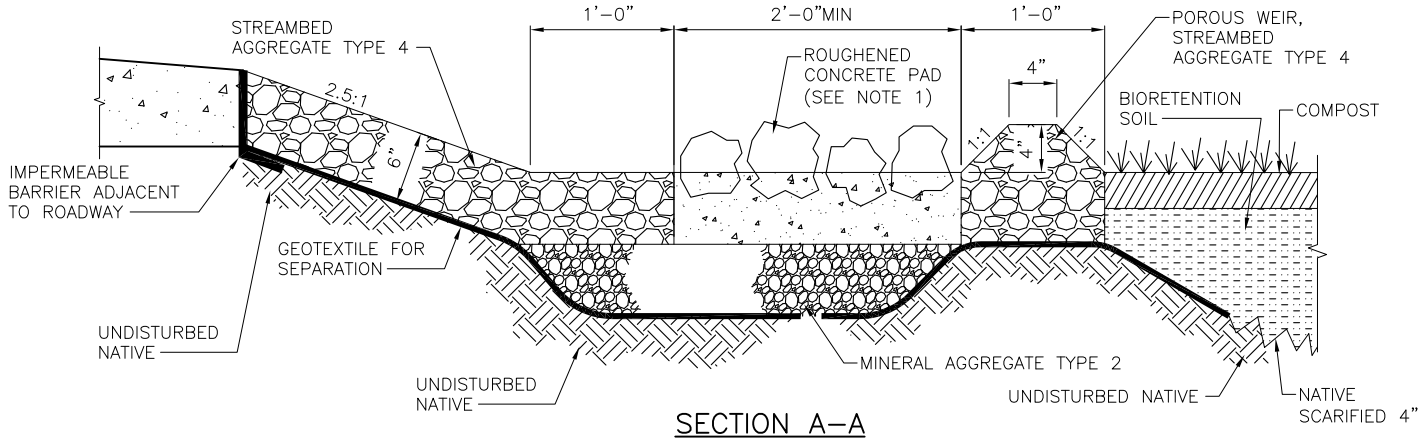

SECTION A–A

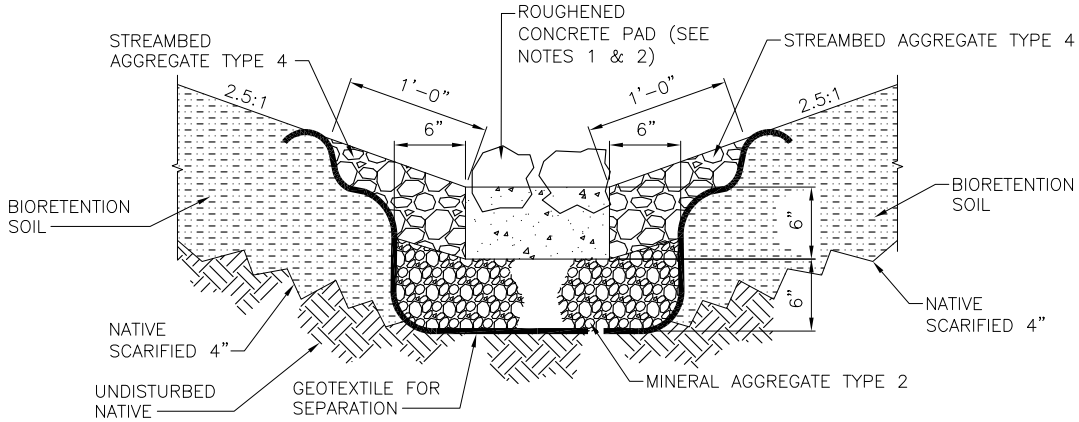

SECTION B–B

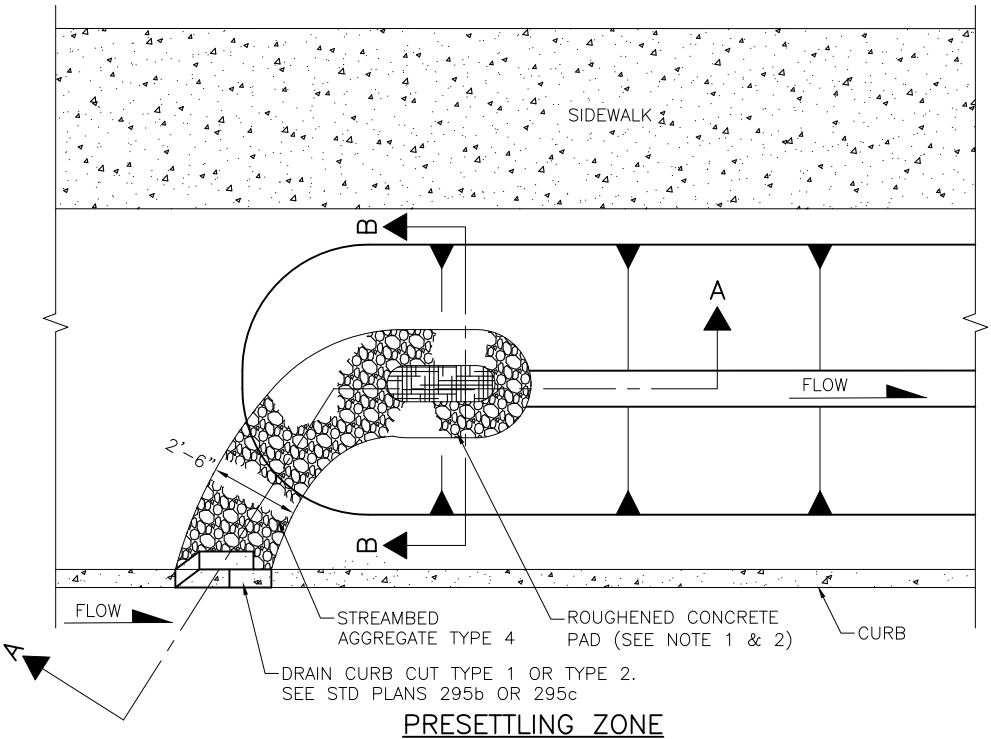

PRESETTLING ZONE

NOTES:

1. ROUGHENED CONCRETE PAD SHALL BE MIN 2' LONG & 2.5 SF OR 5.0SF PER SPU DIRECTOR'S RULE 200
2. ROUGHENED CONCRETE PAD SHALL BE CONSTRUCTED WITH COMMERCIAL CONCRETE (STD SPEC 6–02) EMBED WELL MIXED 6"–8" STREAMBED AGGREGATE TO CREATE ROUGHNESS. 50% MIN OF THE SURFACE SHALL HAVE PROTRUDING AGGREGATE

REF STD SPEC SEC 7-21, 9-03

City of Seattle	NOT TO SCALE	PRESETTLING ZONE

REV DATE: MAY 2014

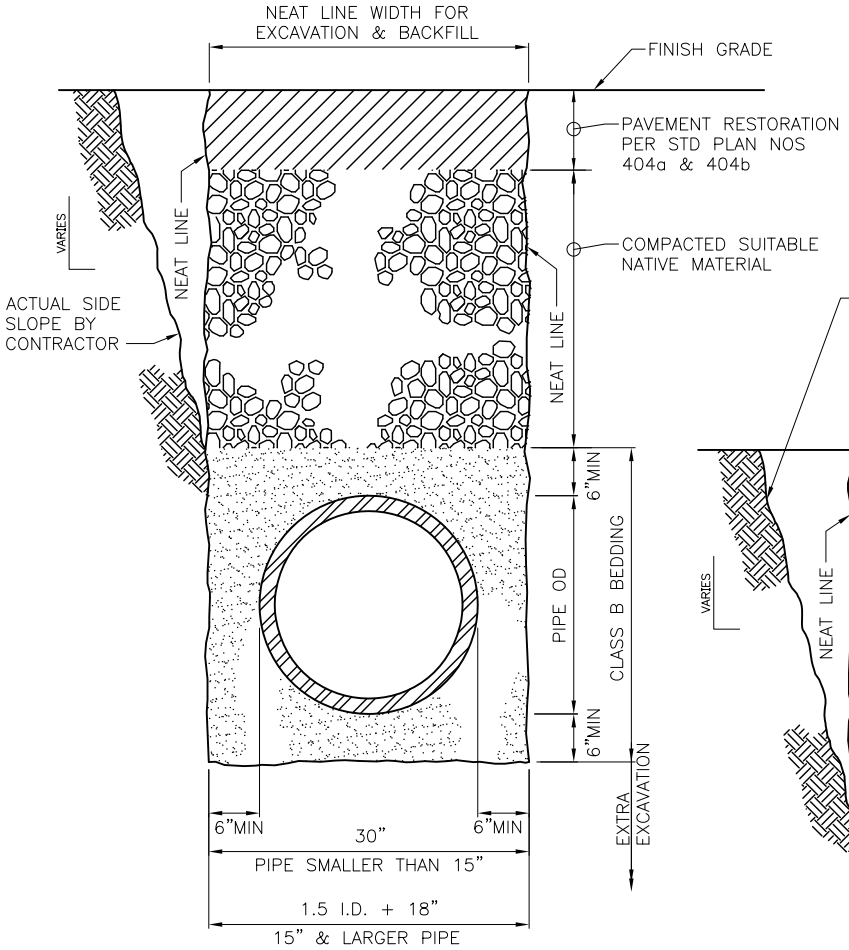

TYPICAL BEDDING

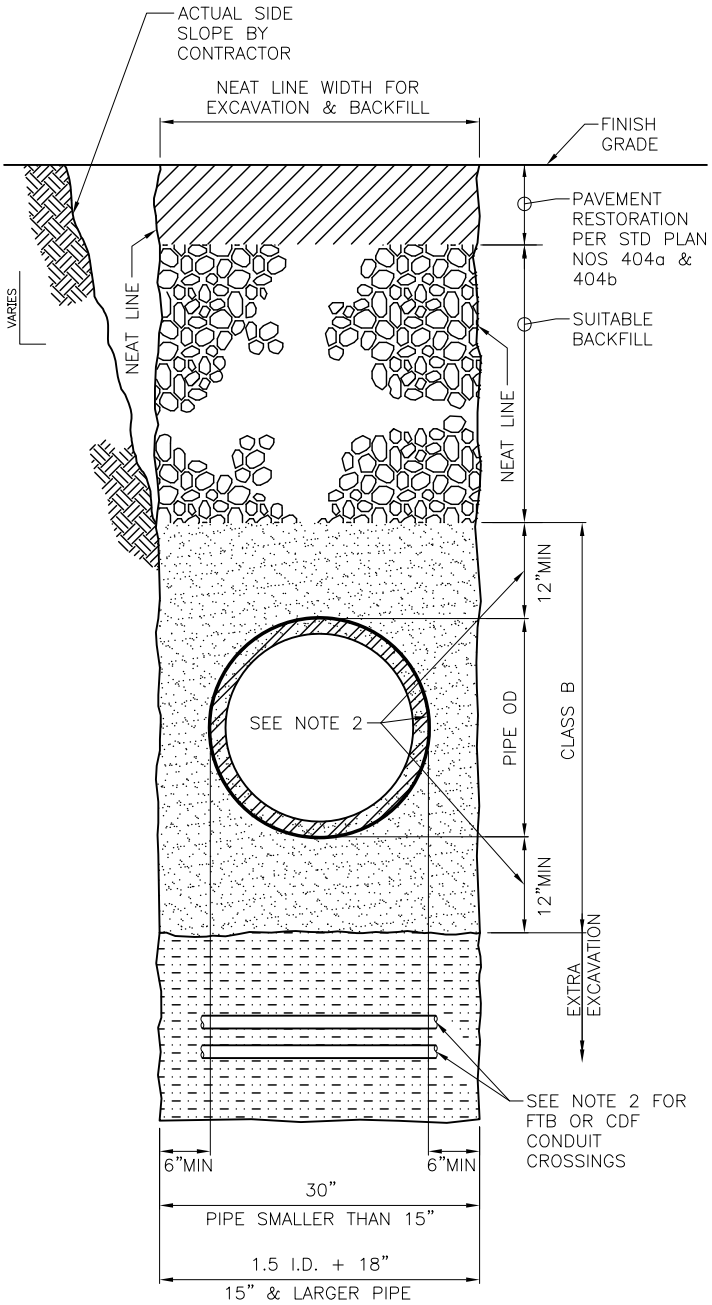

BEDDING AT TRENCH CROSSING

BEDDING MATERIAL

CLASS B:

- FOR DISTRIBUTION WATERMAIN, MINERAL AGGREGATE PER STD SPEC 9-03.16 TYPE 6 OR TYPE 7
- FOR TRANSMISSION WATERMAIN, MINERAL AGGREGATE PER STD SPEC 9-03.16 TYPE 9
- SPECIAL BEDDING TO BE INDICATED ON DRAWINGS

NOTES:

1. EXCAVATE FOR THE BELL TO ENSURE UNIFORM SUPPORT FOR THE PIPE BARREL
2. FOR FLUIDIZED THERMAL BACKFILL (FTB) OR CDF CROSSINGS OF METALLIC PIPE, INCREASE CLASS B SAND DEPTH & COVER TO 12" MIN & ENCASE METALLIC PIPE IN 8 MIL POLYETHYLENE ENCASEMENT FOR FULL TRENCH WIDTH
3. FLUIDIZED THERMAL BEDDING PER SCL MATERIAL STANDARD 7150.00

REF STD SPEC SEC 7-11, 7-17, 9-03.16

City of Seattle	NOT TO SCALE	WATERMAIN TRENCH AND BEDDING

REV DATE: NOV 2015

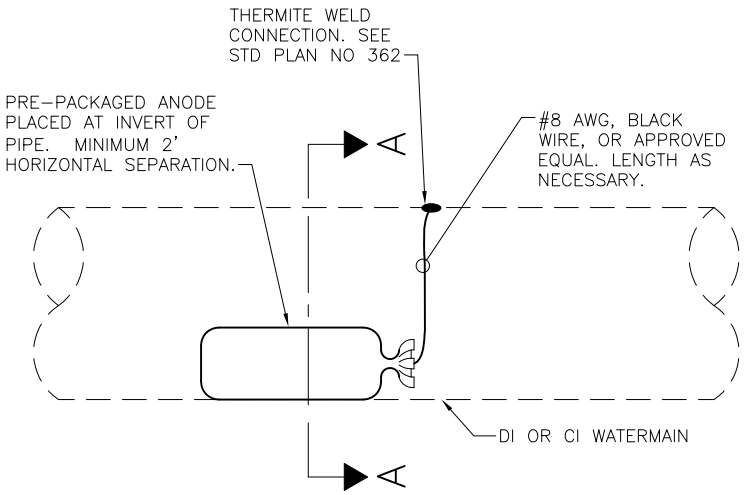

ELEVATION VIEW

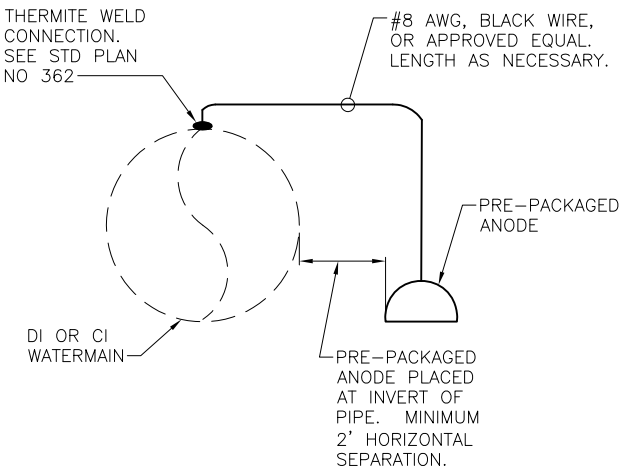

SECTION A–A

TYPICAL SINGLE
HORIZONTAL ANODE INSTALLATION

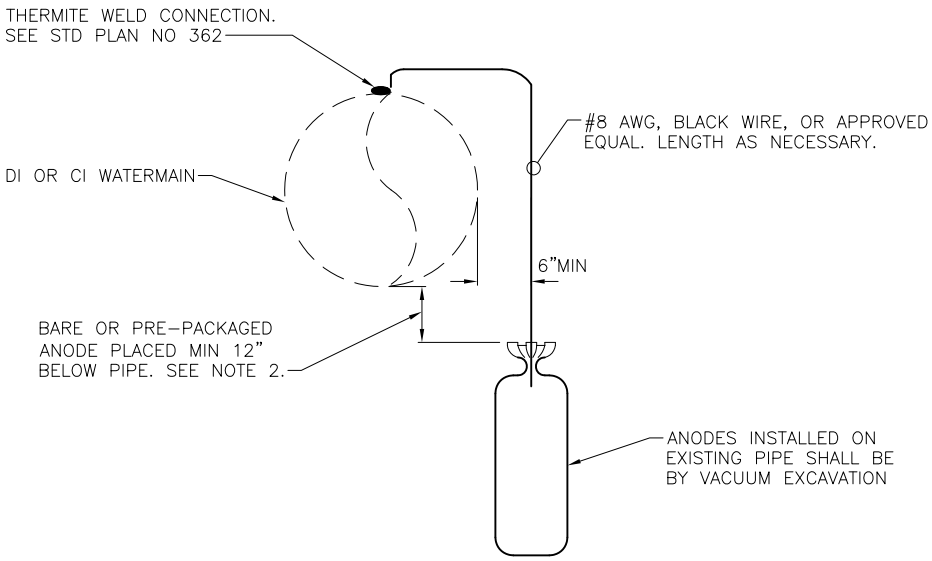

TYPICAL SINGLE
VERTICAL ANODE INSTALLATION

NOTES:

1. SPU CATHODIC PROTECTION MAY SPECIFY TYPE AND REQUIRED SPACING OF ANODE(S) LONGITUDINALLY ALONG WATER MAIN TO BE SHOWN IN DESIGN DRAWINGS. MAXIMUM SPACING SHALL BE 36' UNLESS OTHERWISE NOTED ON PLANS.
2. FOR VERTICAL ANODE INSTALLATION, IF ANODE IS NOT PRE-PACKAGED, BARE ANODE MUST BE INSTALLED W/MIN 6" SC3 COKE BREEZE AROUND ALL SIDES OF ANODE.
3. ANODE SIZE SHALL BE 17LB HIGH POTENTIAL MAGNESIUM ANODE, UNLESS OTHERWISE NOTED ON THE PLANS.
4. PLACE RED "CAUTION" OR "DANGER" TAPE 6" OVER ANODE WIRES. TAPE SHALL BE MIN 3" WIDE.
5. BACKFILL OVER ANODE WITH SUITABLE NATIVE MATERIAL OR APPROVED EQUAL.

REF STD SPEC SEC 7-11, 9-30

City of Seattle	NOT TO SCALE	SACRIFICIAL ANODE BONDED TO PIPE INSTALLATION DETAILS

REV DATE: NOV 2015

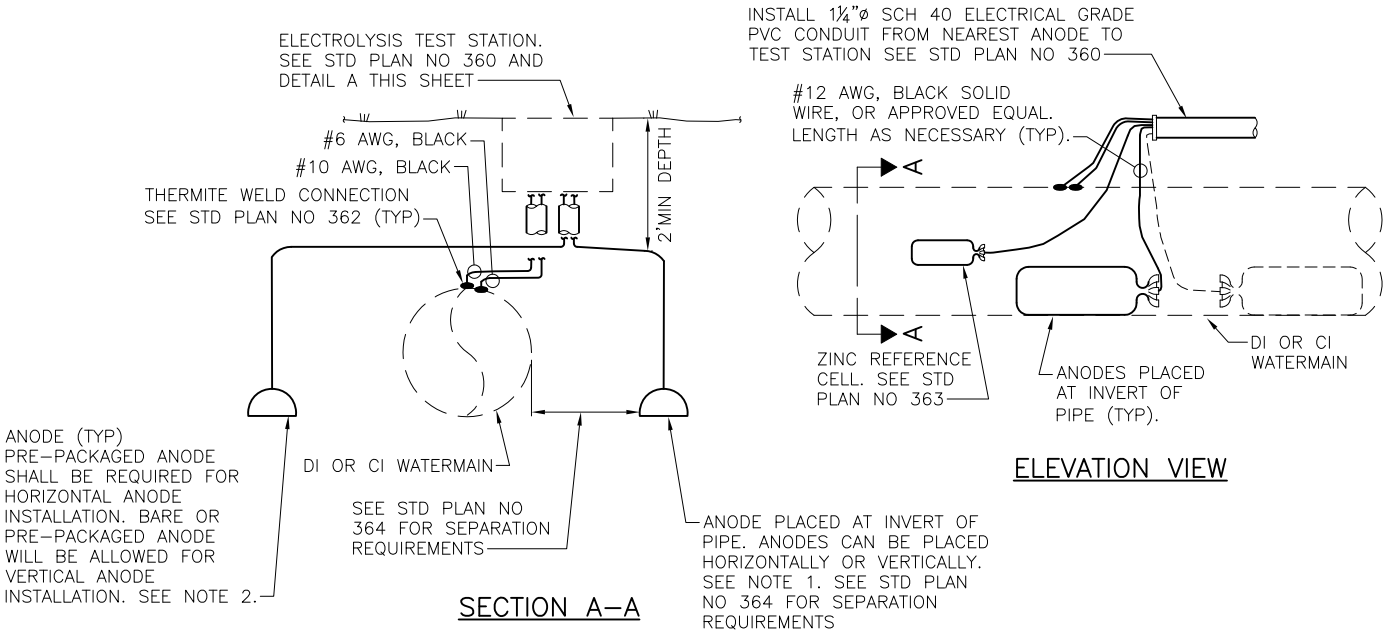

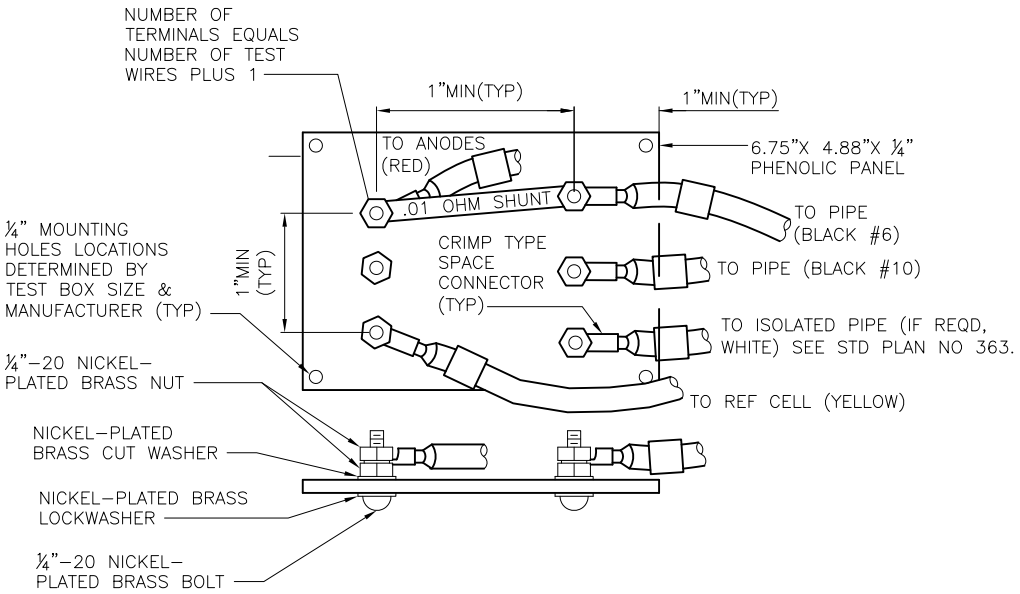

TERMINAL BOARD, DETAIL A

NOTES:

1. REQUIRED SPACING OF ANODE(S) TO BE SHOWN IN DESIGN DRAWINGS.
2. FOR VERTICAL INSTALLATION, IF ANODE IS NOT PRE–PACKAGED, BARE ANODE MUST BE INSTALLED W/ MIN 6" SC3 COKE BREEZE AROUND ALL SIDES OF ANODE.
3. ANODE SIZE SHALL BE 17LB HIGH POTENTIAL MAGNESIUM ANODE, UNLESS OTHERWISE NOTED ON THE PLANS.
4. PLACE RED "CAUTION" OR "DANGER" TAPE 6" OVER ANODE WIRES AND CONDUIT. TAPE SHALL BE MIN 3" WIDE.
5. BACKFILL OVER ANODE WITH SUITABLE NATIVE MATERIAL OR APPROVED EQUAL.

REF STD SPEC SEC 7-11, 9-30

City of Seattle	NOT TO SCALE	SACRIFICIAL ANODE INSTALLATION DETAILS MULTIPLE ANODES CONNECTED AT TEST STATION

REV DATE: FEB 2016

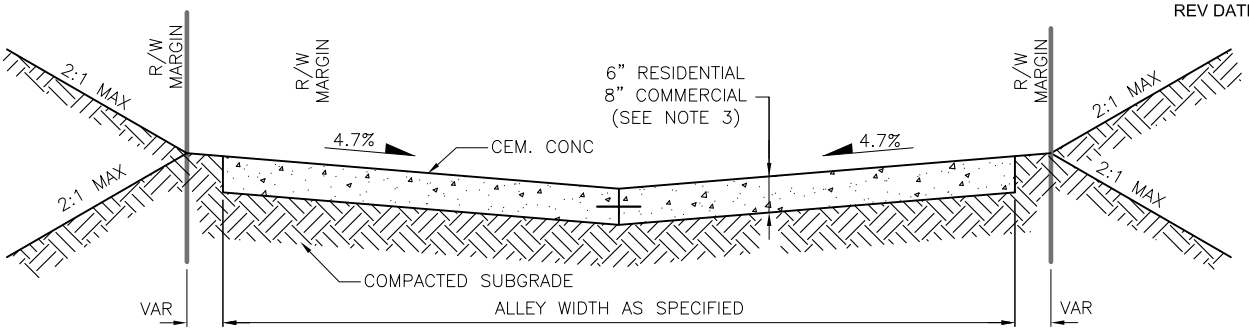

CONCRETE ALLEY PAVEMENT

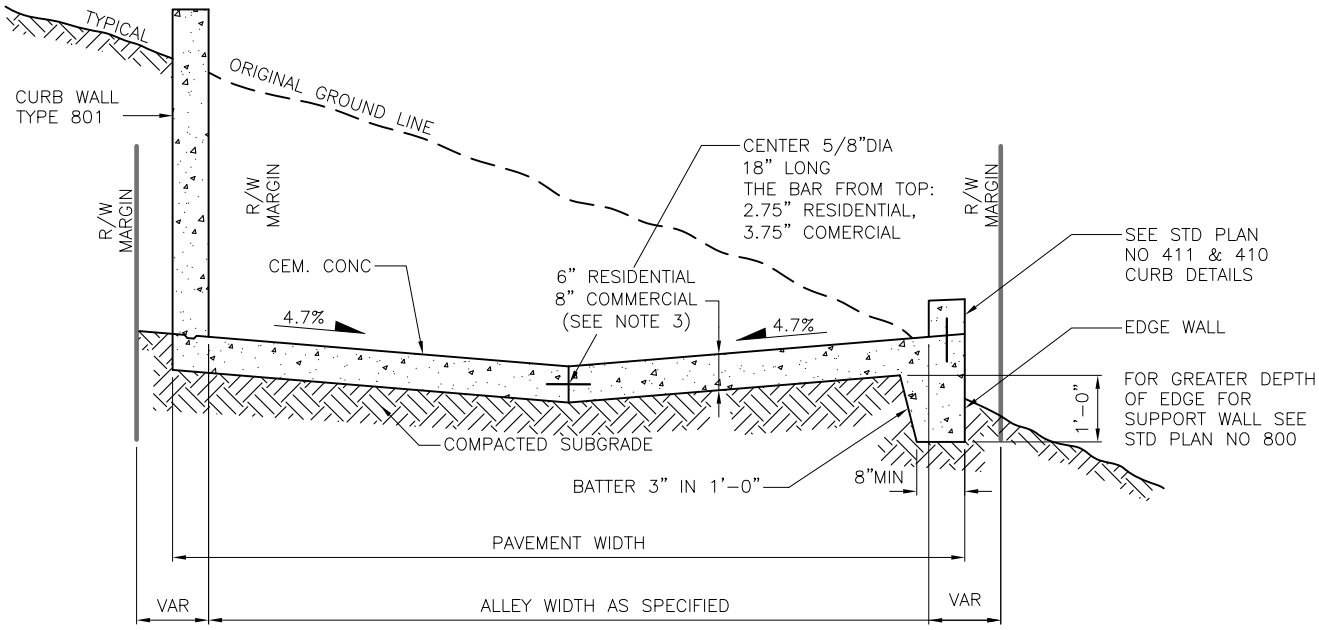

CEMENT CONCRETE ALLEY PAVEMENT 403B–FOR SHALLOW EMBANKMENT AREA

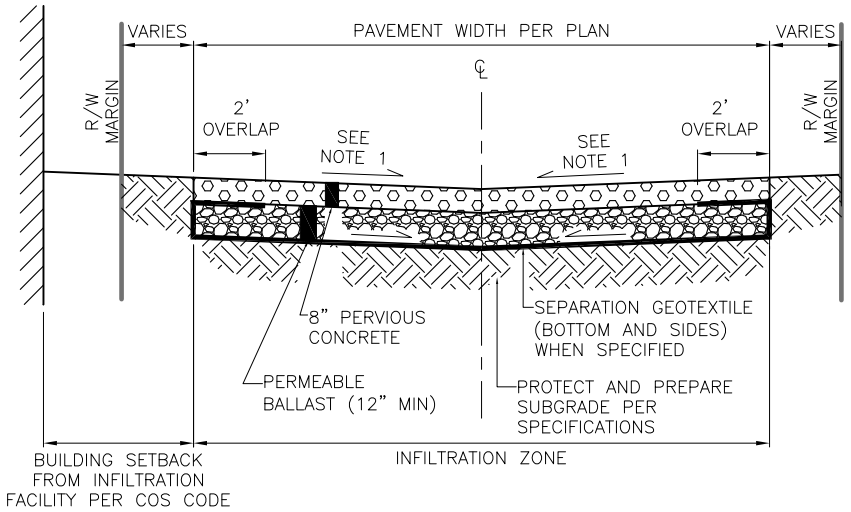

PERVIOUS CONCRETE PAVEMENT

NOTES:

1. WHEN ALLEY PAVEMENT IS 16'–0" OR WIDER PLACE CONSTRUCTION JOINT WITH TIE BAR PER STD PLAN NO 405 ALONG CENTERLINE OF ALLEY.
2. FOR ADA ACCESSIBLE ACCESS TO ENTRY IN ALLEY CONSIDER ALTERNATIVE DESIGN; SUBJECT TO APPROVAL BY THE ENGINEER.
3. 8" OR AS SHOWN IN CONTRACT OR APPROVAL BY THE ENGINEER.
4. MIN CROSS SLOPE IS 1%
5. PERMEABLE BALLAST SHALL BE MINERAL AGGREGATE TYPE 13, UNLESS DETERMINED OTHERWISE BY ENGINEER.

REF STD SPEC SEC 8-17, 8-19

City of Seattle	NOT TO SCALE	ROADWAY CEMENT CONCRETE ALLEY PAVEMENTS

REV DATE: AUG 2014

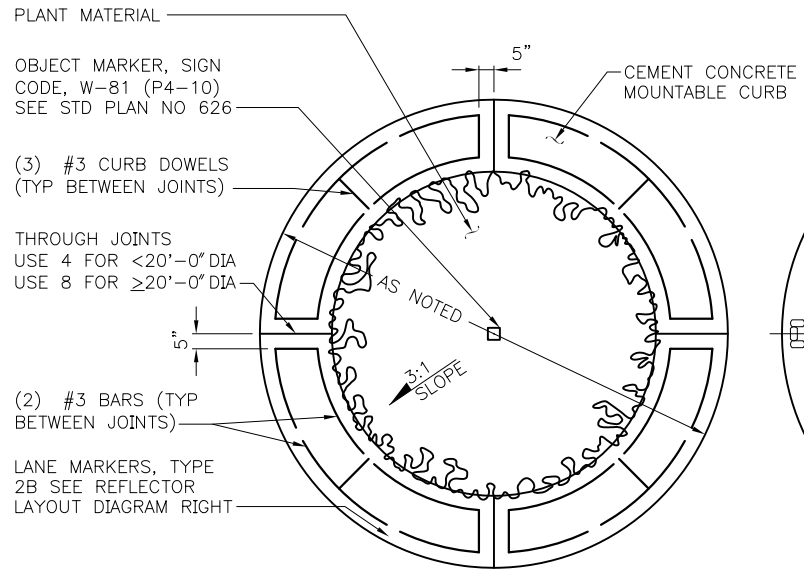

TYPICAL TRAFFIC CIRCLE

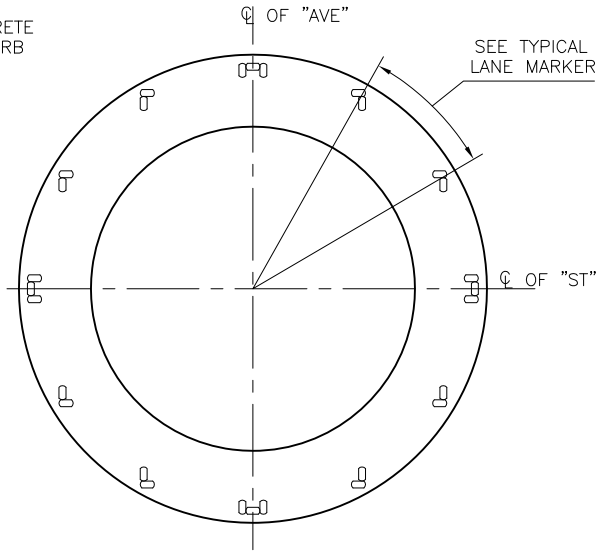

TRAFFIC CIRCLE REFLECTOR LAYOUT

SPACING CHART

DIAMETER OF CIRCLE	DEGREE OF SPACING
≤12'-0"	EVERY 45°
≤20'-0"	EVERY 30°
>20'-0"	EVERY 22 1/2°
(FACING VEHICLE APPROACHES)	

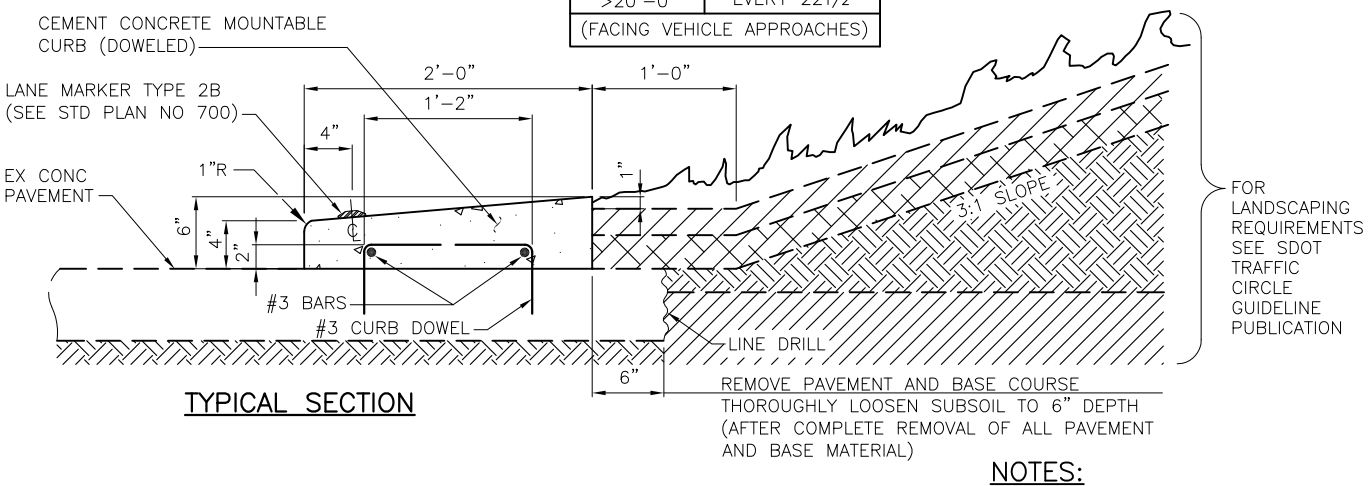

TYPICAL SECTION

NOTES:

1. DIMENSIONS ABOVE PAVEMENT EXTENSION TO MATCH SECTION DETAILED ELSEWHERE ON THIS STD PLAN
2. EXTEND CURB DEPTH TO MATCH ADJACENT ASPHALT THICKNESS OR 7" WHICHEVER IS GREATER

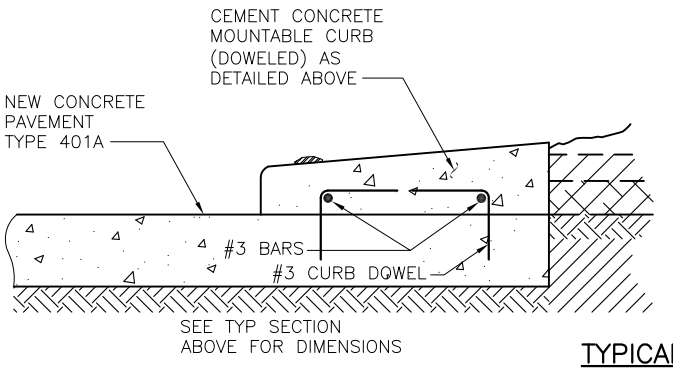

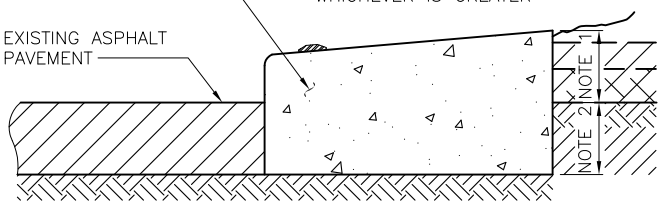

TYPICAL SECTIONS

REF STD SPEC SEC 8-02, 8-04, 8-08

City of Seattle	NOT TO SCALE	TRAFFIC CIRCLE DETAILS

REV DATE: FEB 2016

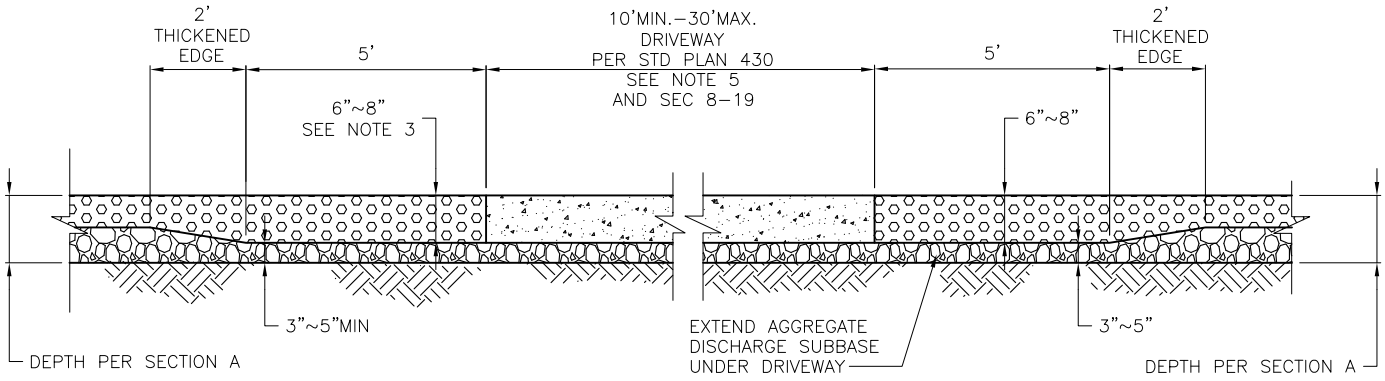

PERVIOUS CONC CEM SIDEWALK DEPTH
TRANSITION AT DRIVEWAYS PROFILE VIEW

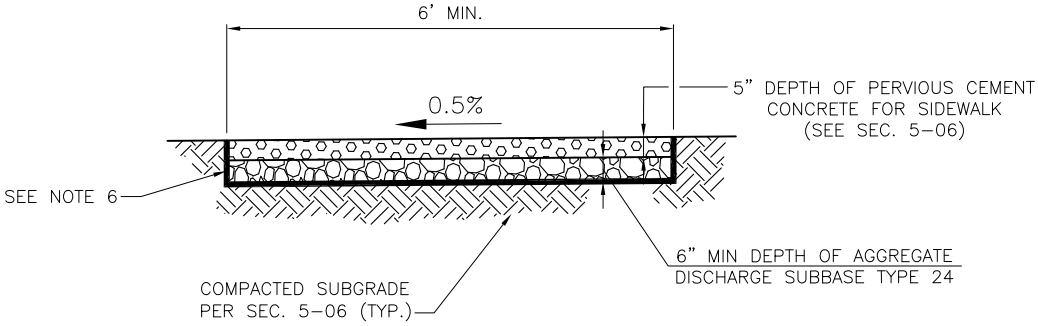

PERVIOUS CONC SECTION A

NOTES:

1. DEPTHS SHOWN FOR PAVEMENT SECTIONS ARE COMPACTED DEPTH.
2. SIDEWALK DEPTH AT DRIVEWAY TO MATCH DRIVEWAY PAVEMENT DEPTH.
3. DEPTH OF POROUS CEMENT CONCRETE FOR DRIVEWAYS SHALL BE 8" MIN.
4. 6% MAX. PERVIOUS CEMENT CONCRETE PROFILE GRADE.
5. WHERE PERVIOUS CONCRETE IS SHOWN ON PLANS FOR ALLEY, PERVIOUS CONCRETE SHALL BE 8" WITH 3" AGGREGATE DISCHARGE SUBBASE.
6. APPLY SEPARATION GEOTEXTILE SEC. 9–37, ON BOTTOM AND SIDES. EXTEND GEOTEXTILE ABOVE PERVIOUS CONCRETE FOR SIDEWALK PAVEMENT. AFTER PAVEMENT HAS CURED AND ADJACENT FINISHED GRADE HAS BEEN STABILIZED, CUT SEPARATION GEOTEXTILE AT FINISHED GRADE (TYP.)

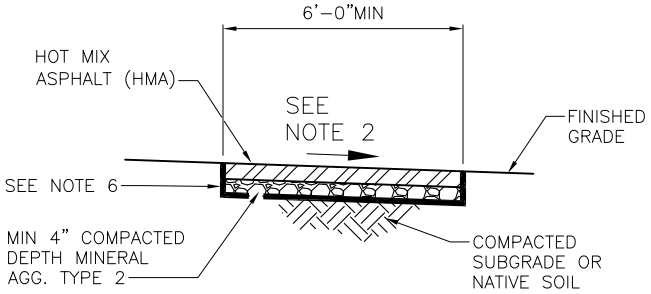

HOT MIX ASPHALT PAVEMENT SIDEWALK SECTION

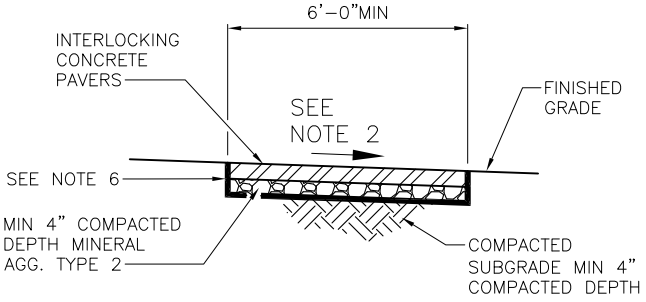

CONCRETE PAVER SIDEWALK SECTION

REF STD SPEC SEC 5-04, 5-06

City of Seattle	NOT TO SCALE	ALTERNATIVE WALKWAYS

REV DATE: FEB 2016

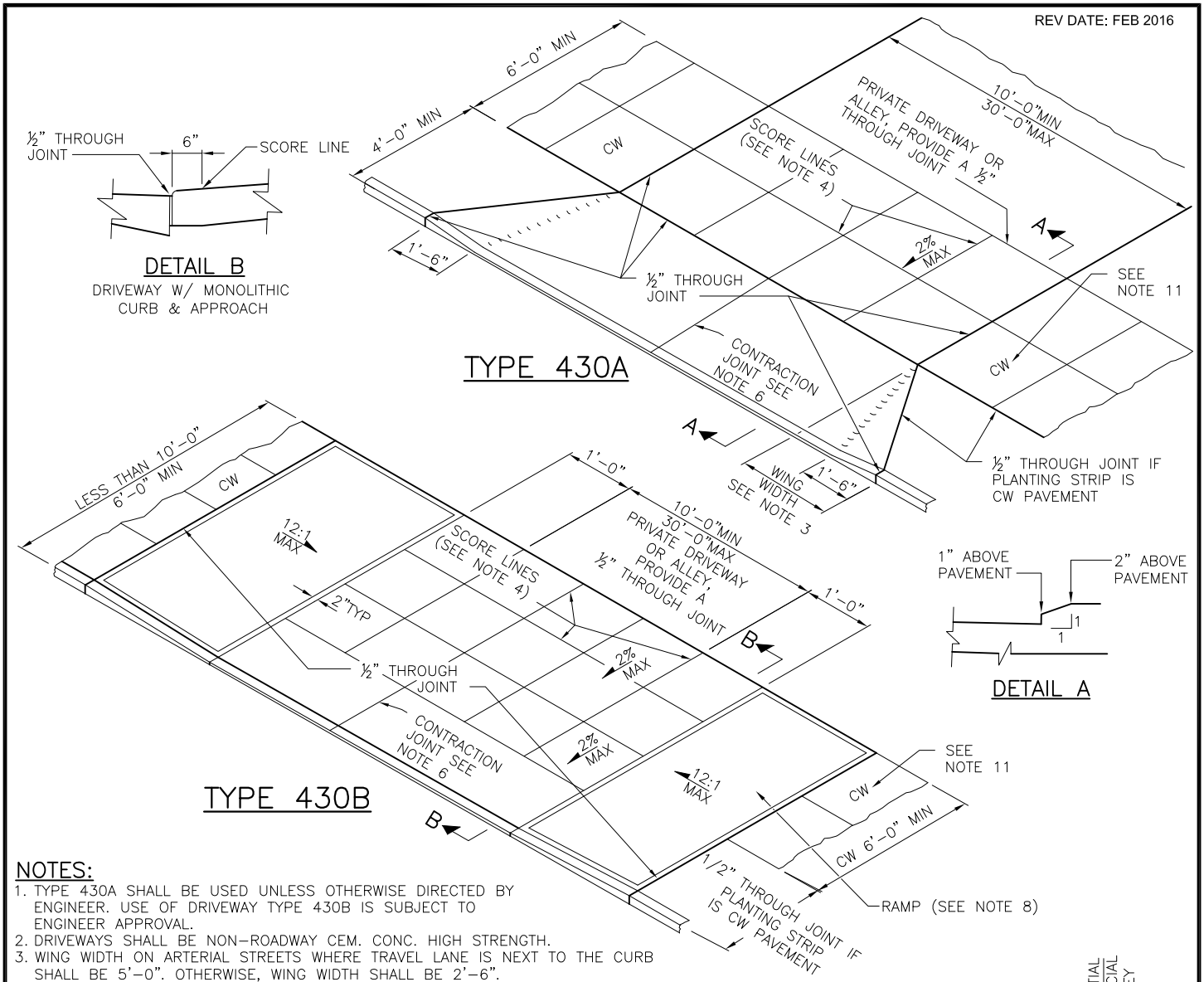

NOTES:

1. TYPE 430A SHALL BE USED UNLESS OTHERWISE DIRECTED BY ENGINEER. USE OF DRIVEWAY TYPE 430B IS SUBJECT TO ENGINEER APPROVAL.
2. DRIVEWAYS SHALL BE NON-ROADWAY CEM. CONC. HIGH STRENGTH.
3. WING WIDTH ON ARTERIAL STREETS WHERE TRAVEL LANE IS NEXT TO THE CURB SHALL BE 5'-0". OTHERWISE, WING WIDTH SHALL BE 2'-6".
4. "V" GROOVE SCORING SHALL MATCH PATTERN IN ADJACENT EXISTING SIDEWALK.
5. FOR CONCRETE DRIVEWAY CONSTRUCTED WITH CONCRETE SIDEWALK, SEE STANDARD PLAN NO 431.
6. CONCRETE DRIVEWAYS WITH A WIDTH GREATER THAN 15'-0" SHALL HAVE A ⅜" TRANSVERSE CONTRACTION JOINT NEAR THE CENTERLINE OF DRIVEWAY. SEE DETAIL SECTION C-C STANDARD PLAN NO 420.
7. FOR TYPE 430A SLOPE IN THE 6'-0" MINIMUM WIDE AREA CONNECTING TO CW ON EACH SIDE OF THE DRIVEWAY SHALL BE MAXIMUM 2% AND MINIMUM 0.5%. FOR TYPE 430B, SLOPE OF THE DRIVEWAY BETWEEN THE TWO RAMP SECTIONS SHALL BE MAXIMUM 2% AND MINIMUM 0.5%. DRIVEWAY ON THE PRIVATE SIDE OF THE CW MAY BE SLOPED AS NEEDED TO MATCH EXISTING SITE CONDITIONS.
8. RAMP SHALL HAVE A MAXIMUM SLOPE 12H:1V. AND A MINIMUM WIDTH OF 6'-0". THE CROSS SLOPE OF THE RAMP SHALL BE MAXIMUM OF 50H:1V. RAMP SURFACE SHALL HAVE A HEAVY BROOM BRUSHED SURFACE PERPENDICULAR TO THE CURB.
9. ALL CHANGES IN LEVEL ACROSS JOINTS SHALL BE FLUSH WITH A MAXIMUM DIFFERENCE IN ELEVATION OF $\frac{3}{16}$ INCH.
10. ALL SLOPE GRADES SHALL BE MEASURED OFF THE HORIZON-LINE. IF EXISTING SITE CONDITIONS CONFLICT WITH OBTAINING GRADES SHOWN, THE CONTRACTOR SHALL MAKE MINIMUM ADJUSTMENTS TO THE GRADES TO ACCOMMODATE EXISTING SITE CONDITIONS, ADJUSTMENTS ARE SUBJECT TO ENGINEER APPROVAL.
11. CONCRETE WALKWAY OUTSIDE OF THE DRIVEWAY CROSSING MAY BE PERVIOUS.

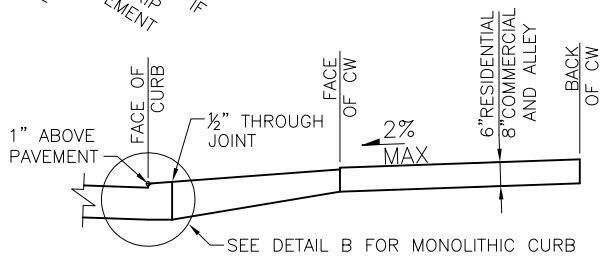

SECTION A–A

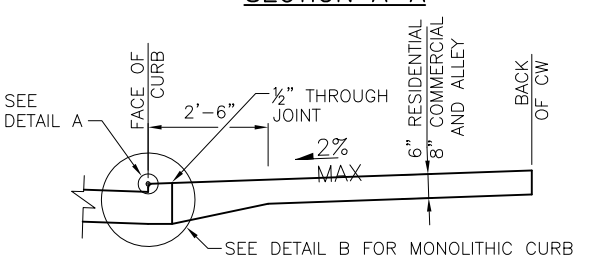

SECTION B–B

REF STD SPEC SEC 8-19

City of Seattle	NOT TO SCALE	TYPE 430A & 430B DRIVEWAYS

REV DATE: JAN 2016

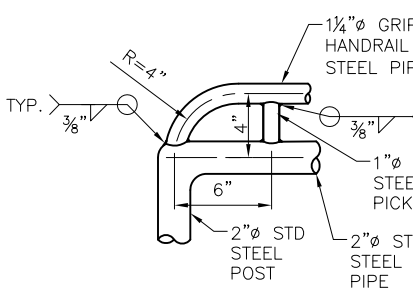

DETAIL A
HANDGRIP ENDS

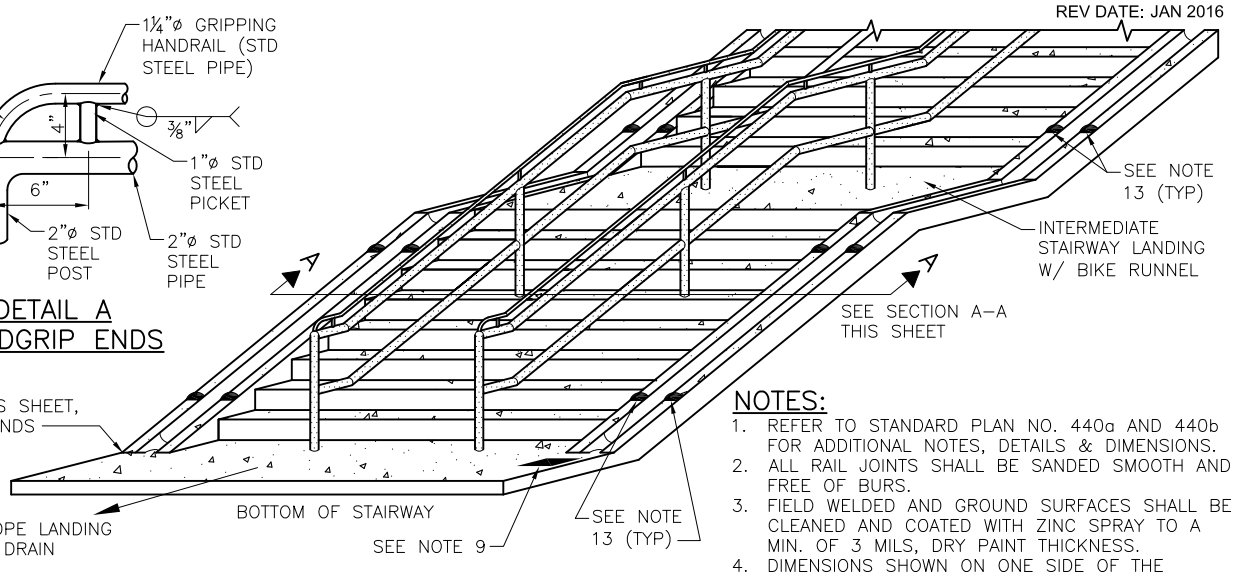

NOTES:

1. REFER TO STANDARD PLAN NO. 440a AND 440b FOR ADDITIONAL NOTES, DETAILS & DIMENSIONS.
2. ALL RAIL JOINTS SHALL BE SANDED SMOOTH AND FREE OF BURS.
3. FIELD WELDED AND GROUND SURFACES SHALL BE CLEANED AND COATED WITH ZINC SPRAY TO A MIN. OF 3 MILS, DRY PAINT THICKNESS.
4. DIMENSIONS SHOWN ON ONE SIDE OF THE SECTION VIEW ARE TYPICAL TO THE OTHER SIDE, UNLESS NOTED OTHERWISE.
5. DISTANCE BETWEEN HANDGRIP SUPPORTS SHALL NOT EXCEED 6'.
6. BIKE RUNNEL SLAB THICKNESS VARIES WITH STEP RISER HEIGHT. MIN. 10.5", MAX. 12.5"
7. RUNNEL LIP HEIGHT 1.5" ABOVE STEP NOSING AND LANDING.
8. LANDINGS THAT INTERSECT OTHER STAIRS OR WALKS SHALL BE AT LEAST 6' LONG TO ALLOW FOR A MIN. 4' OF CLEAR AREA WITHOUT RUNNEL & RAIL.
9. STAMP CONCRETE AT TOP AND BOTTOM OF RUNNEL. SEE CONCRETE STAMP DETAIL STD PLAN NO 440d.
10. RUNNEL LOCATION SHALL BE ON EITHER SIDE OF STAIRWAY AS DETERMINED BY ENGINEER.
11. LONG STAIRWAYS OR STAIRWAYS WITH SIGHT OBSTRUCTIONS TO CYCLISTS SHALL HAVE SIDEWALK BREAKS TO ALLOW ONCOMING CYCLISTS PASSAGE. LOCATIONS OF SIDEWALK BREAKS TO BE DETERMINED BY ENGINEER.
12. ANY CONSTRUCTION OUTSIDE OF RUNNEL SHALL ALLOW ENOUGH CLEARANCE FOR BIKE PEDALS AND HANDLEBARS FROM INTERFERING WITH MOVEMENT.
13. INSTALL ANTI–SKATE DEVICES 3' FROM THE TOP & BOTTOM OF LANDINGS ON ALL HANDRAILS & ON BOTH SIDES OF RUNNEL CHANNEL.

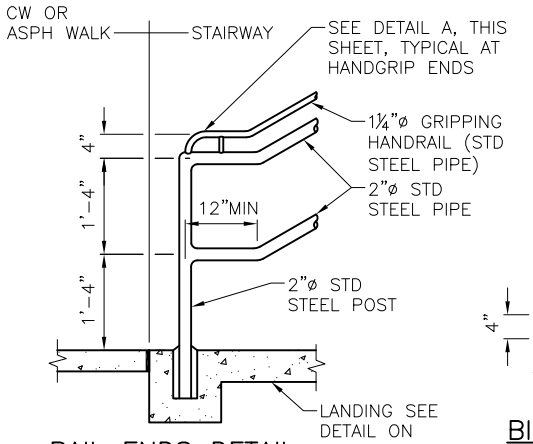

RAIL ENDS DETAIL

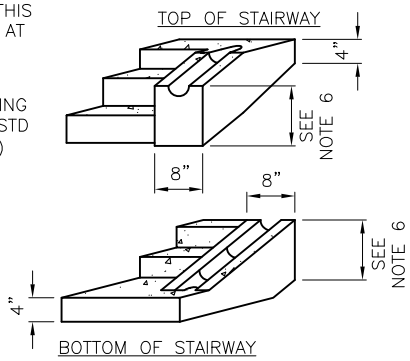

DETAIL B
BIKE RUNNEL ENDS

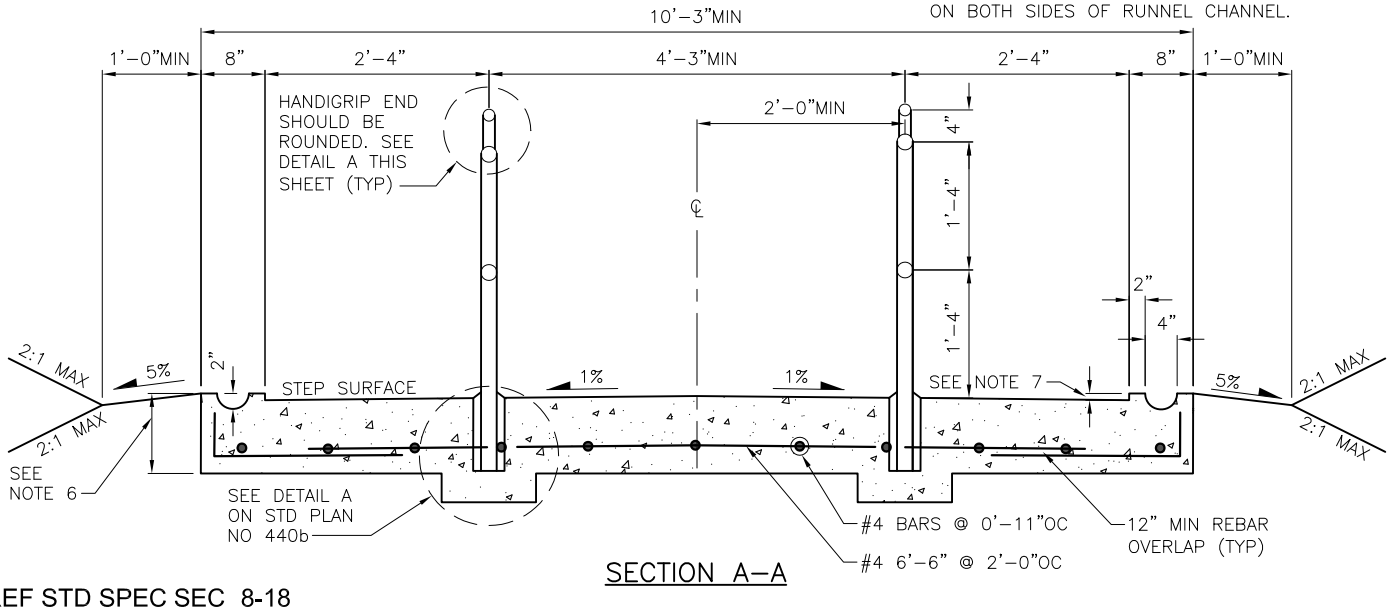

SECTION A–A

REF STD SPEC SEC 8-18

City of Seattle	NOT TO SCALE	CEMENT CONCRETE STAIRWAY & BIKE RUNNEL

REV DATE: SEP 2015

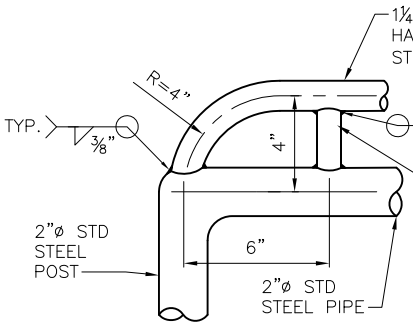

DETAIL A
HANDGRIP ENDS

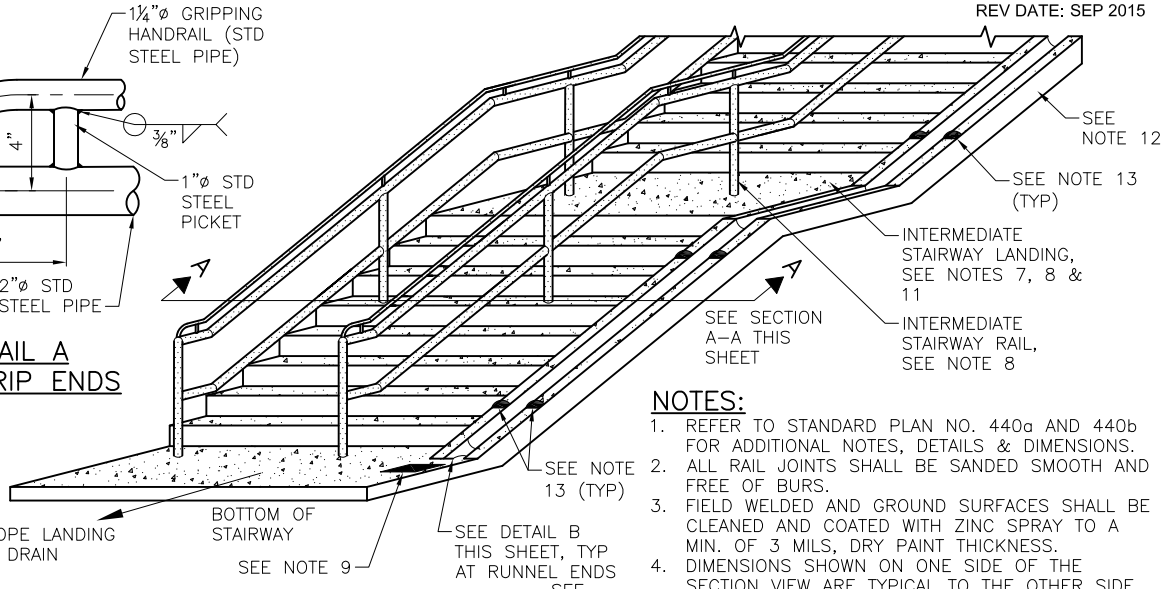

NOTES:

1. REFER TO STANDARD PLAN NO. 440a AND 440b FOR ADDITIONAL NOTES, DETAILS & DIMENSIONS.
2. ALL RAIL JOINTS SHALL BE SANDED SMOOTH AND FREE OF BURS.
3. FIELD WELDED AND GROUND SURFACES SHALL BE CLEANED AND COATED WITH ZINC SPRAY TO A MIN. OF 3 MILS, DRY PAINT THICKNESS.
4. DIMENSIONS SHOWN ON ONE SIDE OF THE SECTION VIEW ARE TYPICAL TO THE OTHER SIDE, UNLESS NOTED OTHERWISE.
5. DISTANCE BETWEEN HANDGRIP SUPPORTS SHALL NOT EXCEED 6'.
6. BIKE RUNNEL SLAB THICKNESS VARIES WITH STEP RISER HEIGHT. MIN. 10.5", MAX. 12.5"
7. RUNNEL LIP HEIGHT 1.5" ABOVE STEP NOSING AND LANDING.
8. LANDINGS THAT INTERSECT OTHER STAIRS OR WALKS SHALL BE AT LEAST 6' LONG TO ALLOW FOR A MIN. 4' OF CLEAR AREA WITHOUT RUNNEL & RAIL.
9. STAMP CONCRETE AT TOP AND BOTTOM OF RUNNEL. SEE CONCRETE STAMP DETAIL.
10. RUNNEL LOCATION SHALL BE ON EITHER SIDE OF STAIRWAY AS DETERMINED BY ENGINEER.
11. LONG STAIRWAYS OR STAIRWAYS WITH SIGHT OBSTRUCTIONS TO CYCLISTS SHALL HAVE SIDEWALK BREAKS TO ALLOW ONCOMING CYCLISTS PASSAGE. LOCATIONS OF SIDEWALK BREAKS TO BE DETERMINED BY ENGINEER.
12. ANY CONSTRUCTION OUTSIDE OF RUNNEL SHALL ALLOW ENOUGH CLEARANCE FOR BIKE PEDALS AND HANDLEBARS FROM INTERFERING WITH MOVEMENT.
13. INSTALL ANTI–SKATE DEVICES 3' FROM THE TOP & BOTTOM OF LANDINGS ON ALL HANDRAILS & ON BOTH SIDES OF RUNNEL CHANNEL.

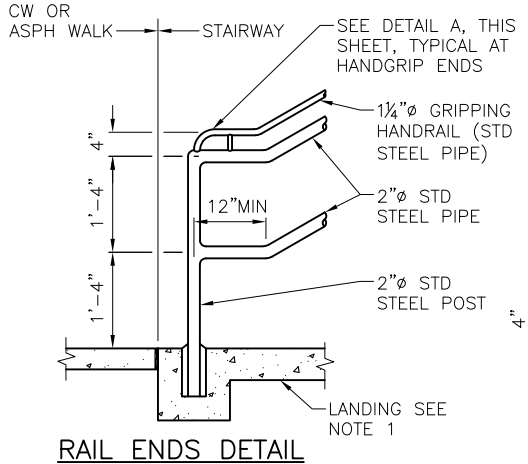

RAIL ENDS DETAIL

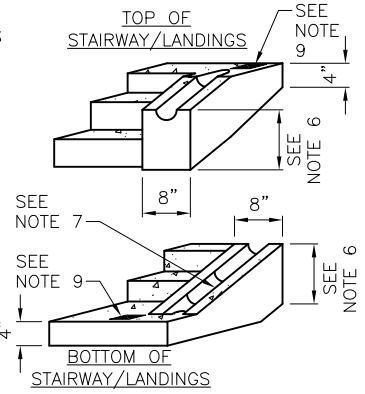

DETAIL B
BIKE RUNNEL ENDS

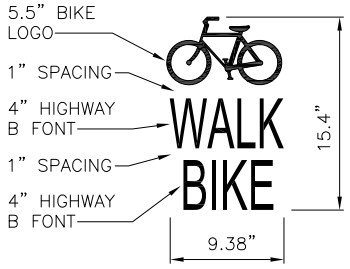

CONCRETE
STAMP DETAIL

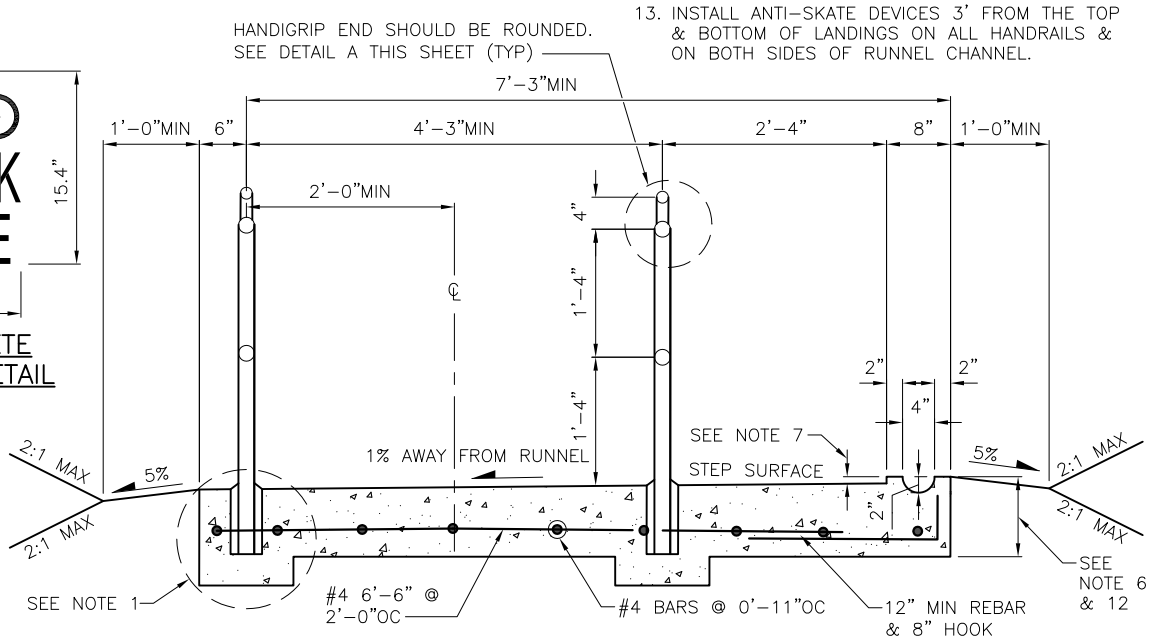

SECTION A–A

REF STD SPEC SEC 8-18

City of Seattle	NOT TO SCALE	CEMENT CONCRETE STAIRWAY & SINGLE BIKE RUNNEL

REV DATE: NOV 2014

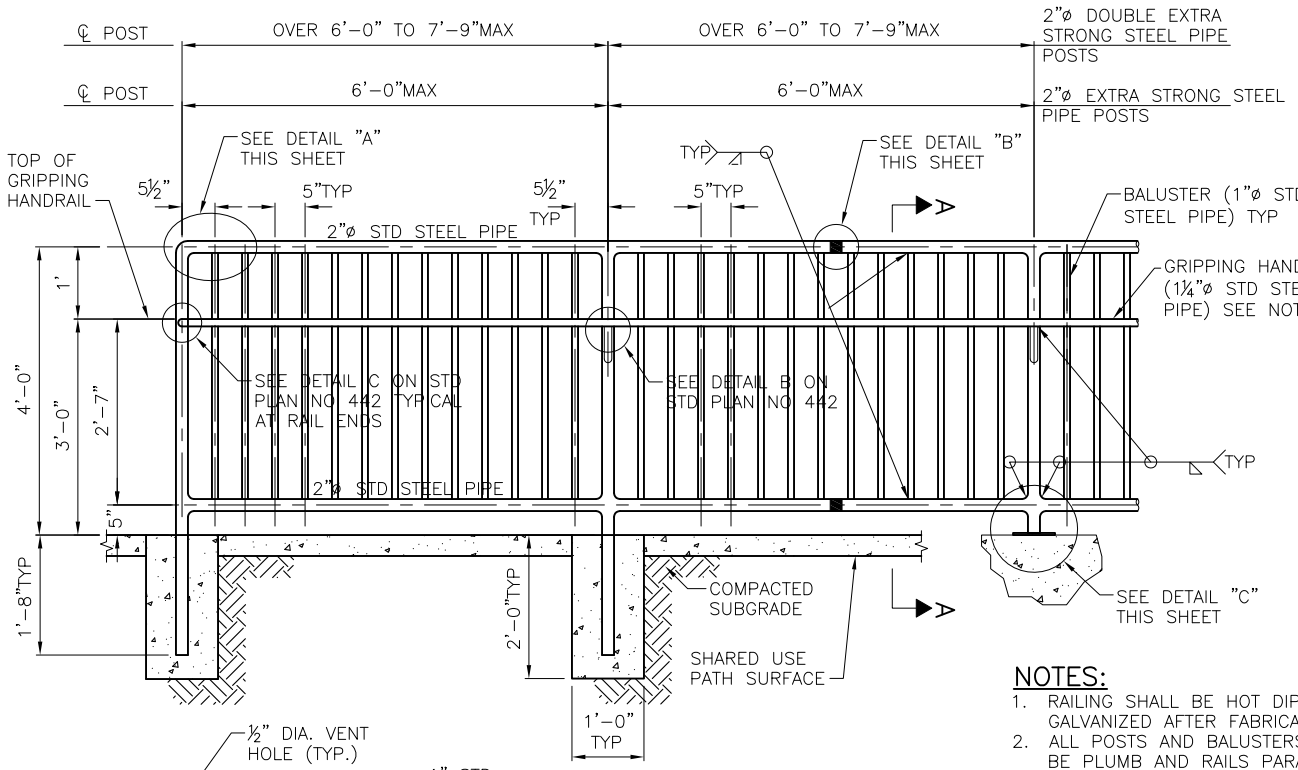

NOTES:

1. RAILING SHALL BE HOT DIP GALVANIZED AFTER FABRICATION
2. ALL POSTS AND BALUSTERS SHALL BE PLUMB AND RAILS PARALLEL TO GRADE
3. PIPE MATERIAL SHALL CONFORM TO ASTM A53
4. REINFORCING STEEL ASTM A706 GR 60
5. IF THE CONCRETE WALK SLOPE IS 5% OR GREATER A GRIPPING HANDRAIL IS REQUIRED
6. PIPE DIAMETERS SHOWN ARE "NOMINAL" DIAMETERS AS GIVEN IN AMERICAN INSTITUTE OF STEEL CONSTRUCTION MANUAL
7. PLACE EXPANSION GAP AT EVERY OTHER PANEL

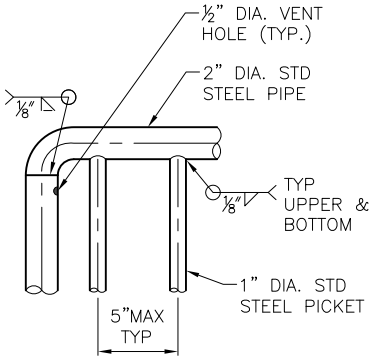

DETAIL A
RAIL ENDS

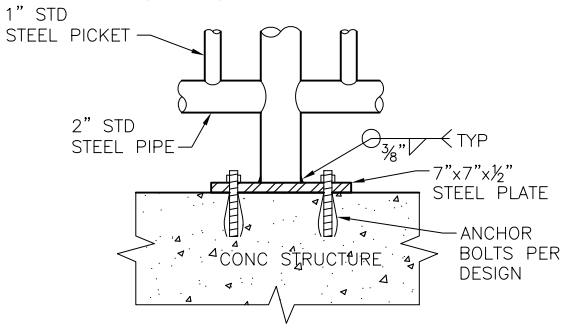

DETAIL C
CONC. STRUCTURE CONNECTION

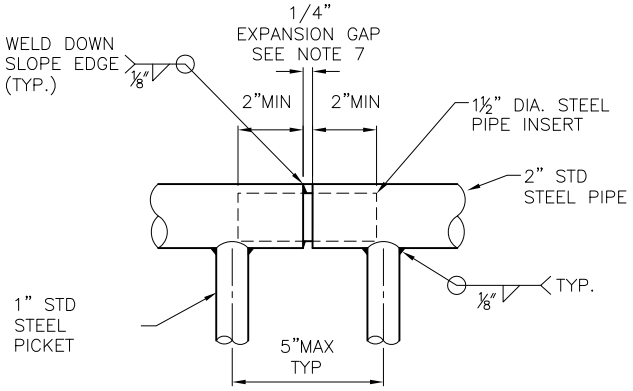

DETAIL B
SLIP JOINT

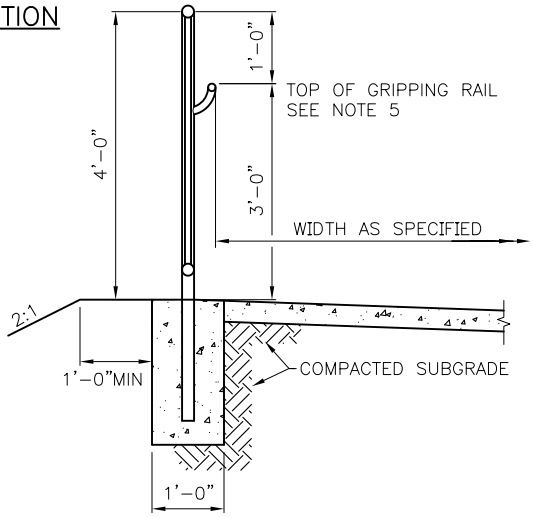

SECTION A–A

REF STD SPEC SEC 8-18

City of Seattle	NOT TO SCALE	VERTICAL RAILING

REV DATE: MAY 2015

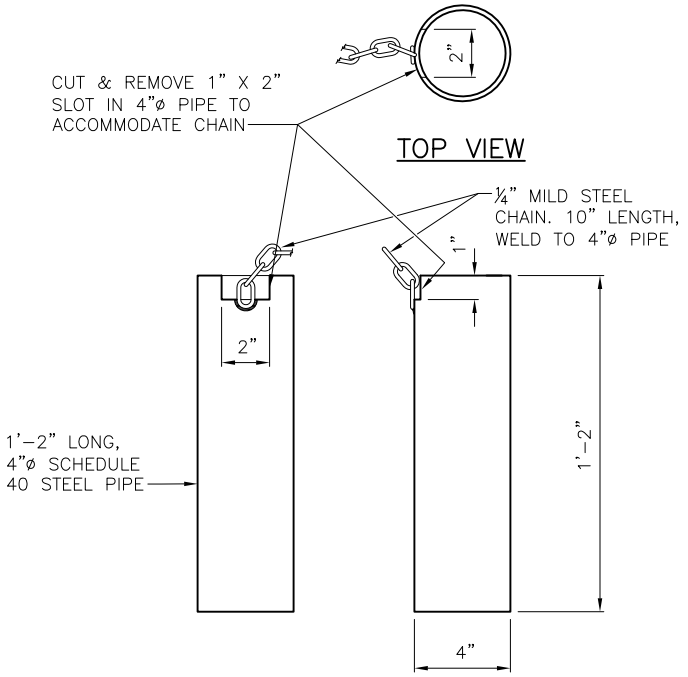

GALVANIZED PIPE SLEEVE

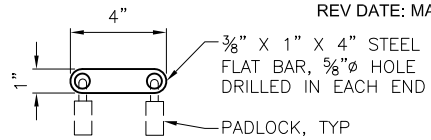

OPTIONAL DOUBLE LOCK BAR

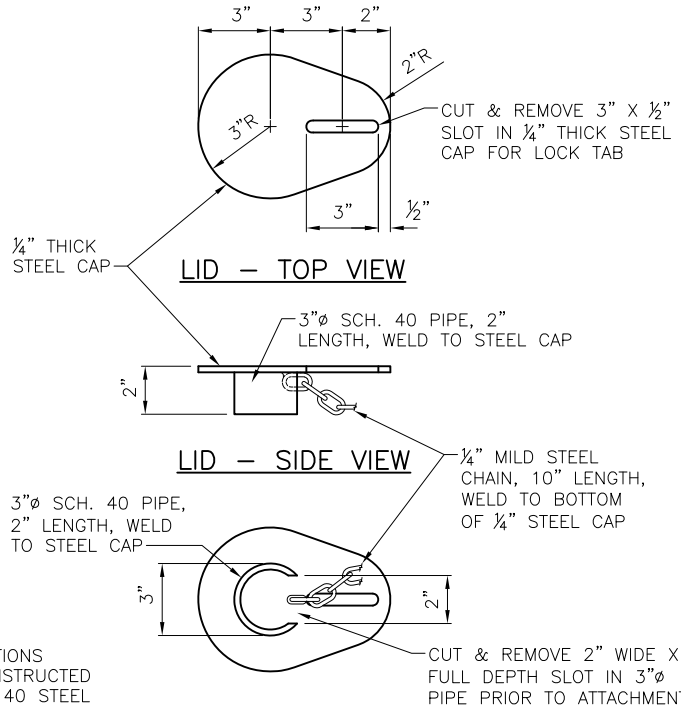

STEEL LID

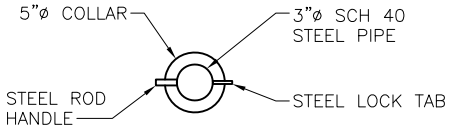

BOLLARD PLAN VIEW

NOTES:

1. ALL PIPE SECTIONS SHALL BE CONSTRUCTED OF SCHEDULE 40 STEEL PIPE AND ALL COMPONENTS SHALL BE HOT DIPPED GALVANIZED AFTER FABRICATION.
2. BOLLARD SHALL NOT EXCEED 50 LBS.

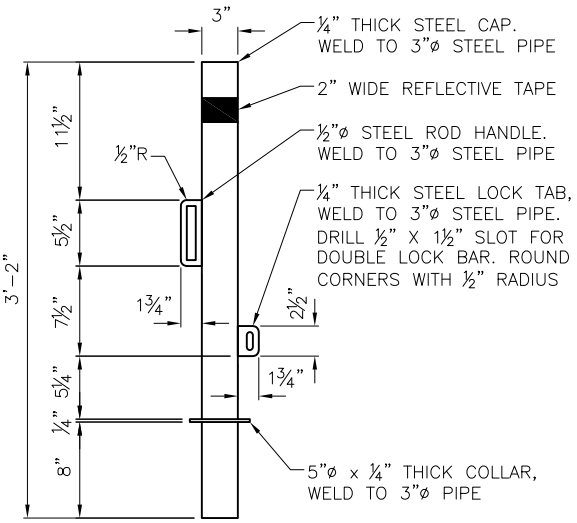

BOLLARD ELEVATION

BOLLARD

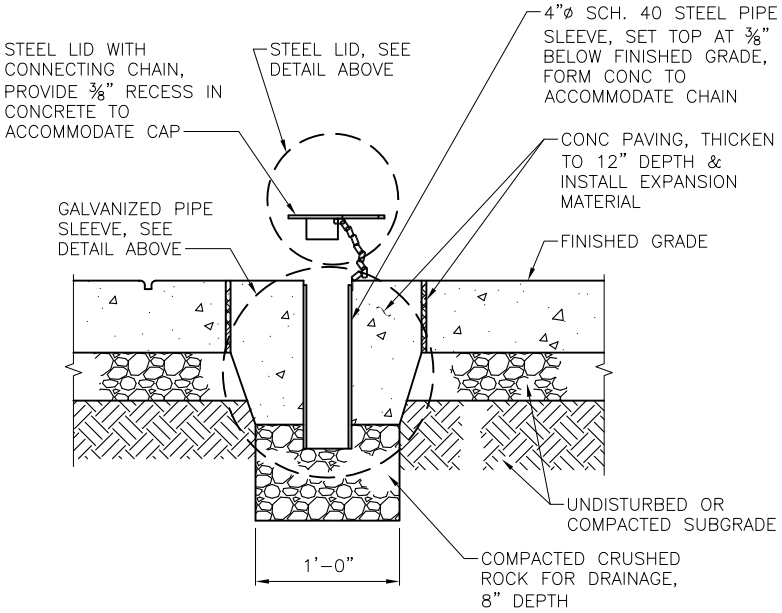

SLEEVE IN CONCRETE SECTION VIEW

REF STD SPEC SEC 8-02

City of Seattle	NOT TO SCALE	REMOVABLE STEEL BOLLARD

REV DATE: OCT 2015

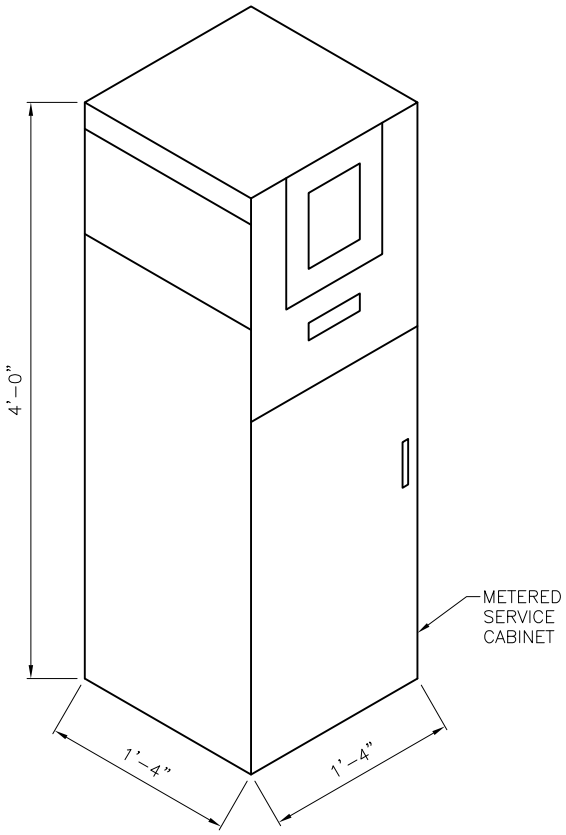

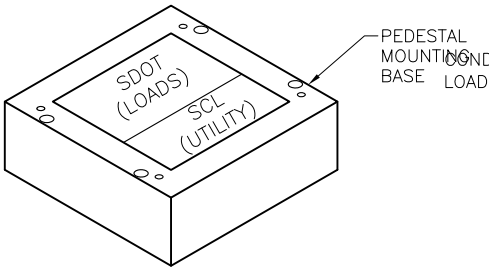

ISOMETRIC VIEW

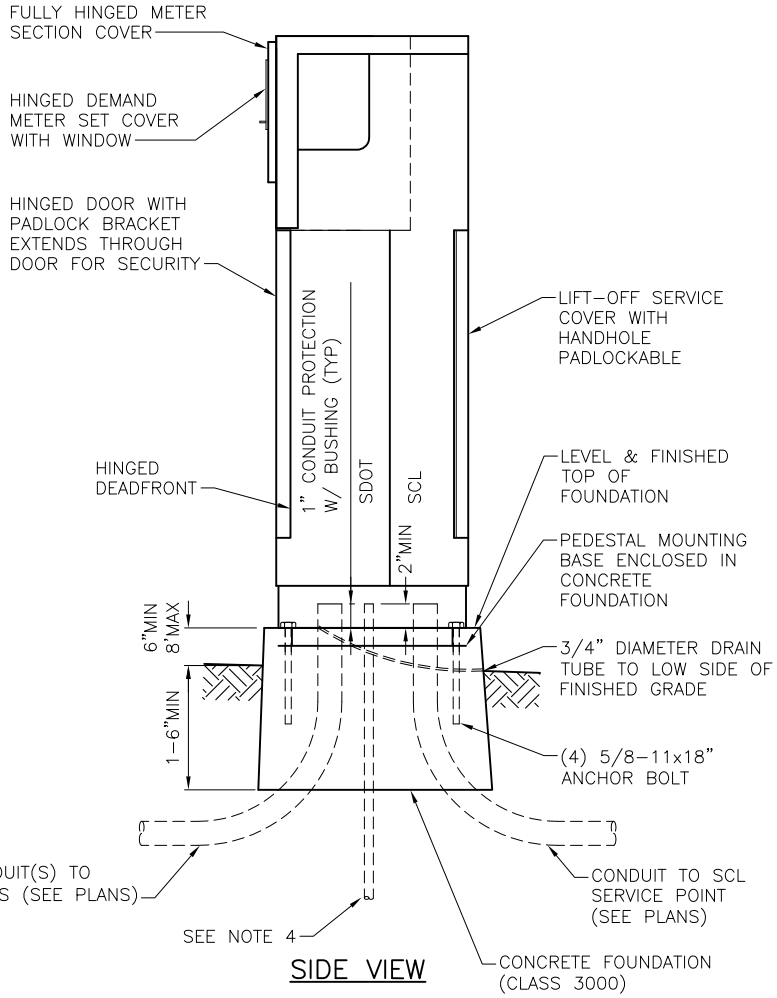

SIDE VIEW

NOTES:

1. 36" MINIMUM CLEARANCE SHALL BE REQUIRED IN FRONT OF BOTH FRONT AND BACK CABINET DOOR.
2. SEAL CABINET TO FOUNDATION WITH GREY OR CLEAR SILICON TO PREVENT MOISTURE FROM ENTERING THE CABINET.
3. EXACT SERVICE CABINET DIMENSIONS, ANCHOR BOLT LOCATIONS AND PEDESTAL MOUNTING HOLES SHALL BE PROVIDED BY THE MANUFACTURER.
4. DDGROUND ROD 3/4"x120" COPPER WITH GROUND CLAMP. A SECOND GROUND SHALL BE INSTALLED A MINIMUM 8' AWAY IN A GROUND ROD HANDHOLE AS PER CITY OF SEATTLE STANDARD PLAN NO 550b. COORDINATE WITH ELECTRICAL INSPECTOR FOR LOCATION. INSTALL #4 AWG COPPER-CLAD GROUND WIRE BETWEEN CABINET FOUNDATION AND GROUND ROD HANDHOLE

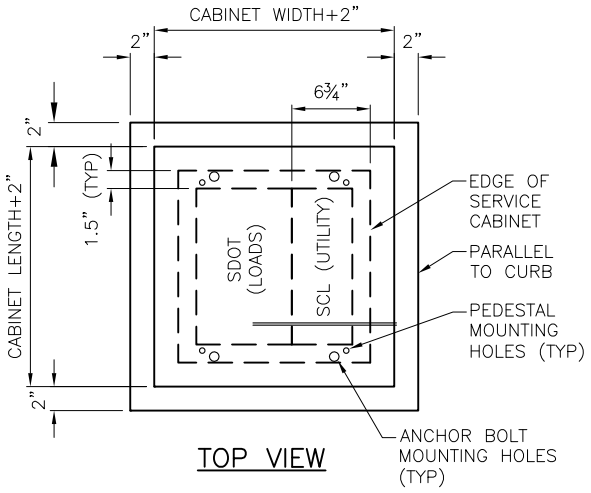

TOP VIEW

REF STD SPEC SEC 8-31,8-32

City of Seattle	NOT TO SCALE	SERVICE CABINET FOUNDATION DETAIL

REV DATE: OCT 2015

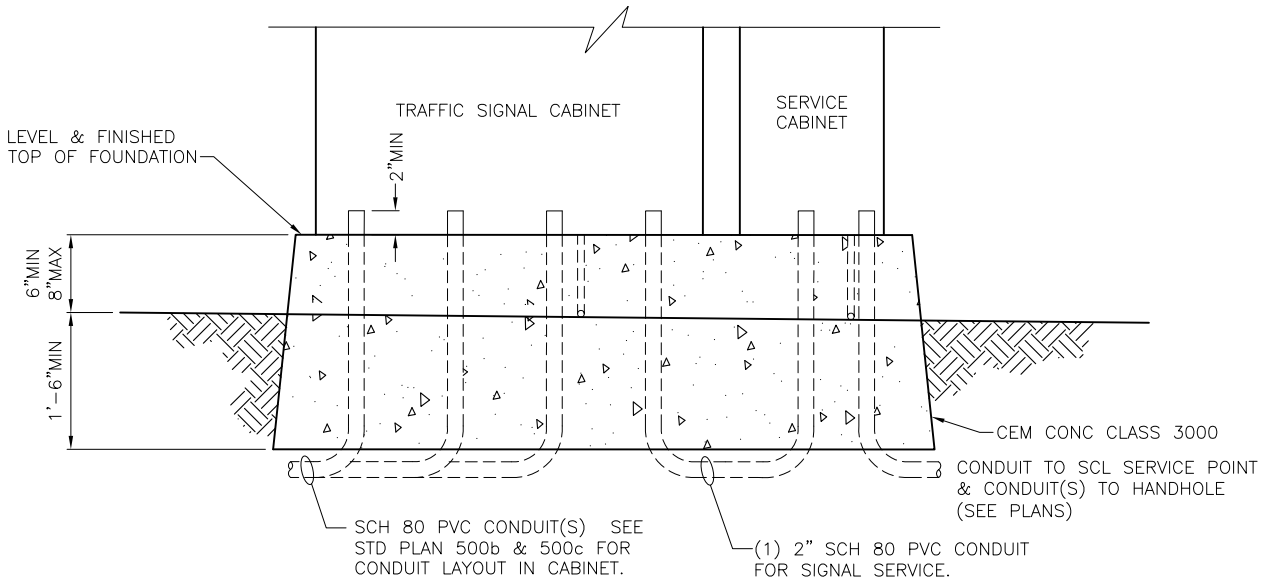

SIDE VIEW

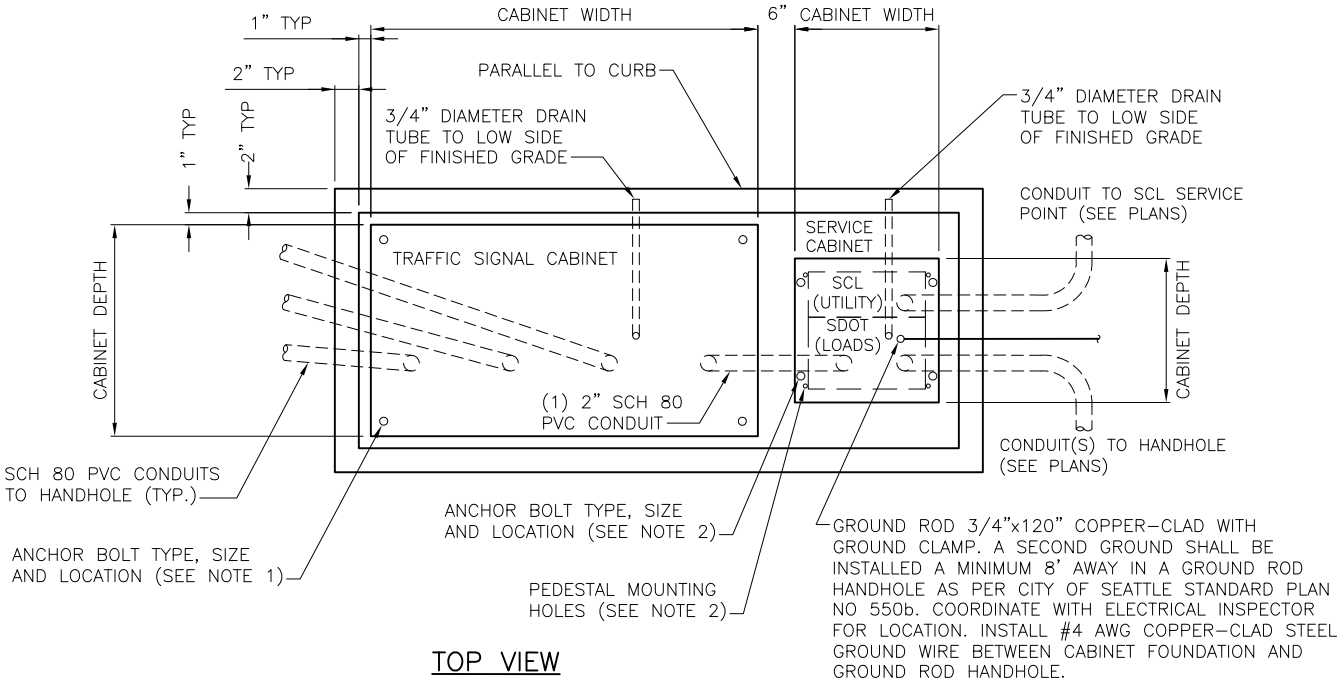

TOP VIEW

JOINT SIGNAL CONTROLLER/SERVICE CABINET FOUNDATION DETAIL

NOT TO SCALE

NOTES:

1. FOR SIGNAL CONTROLLER DIMENSIONS AND OTHER REQUIREMENTS, SEE STD PLAN NO. 500a.
2. FOR SERVICE CABINET DIMENSIONS AND OTHER REQUIREMENTS, SEE STD PLAN NO 501a.
3. SEAL CABINETS TO FOUNDATION WITH GREY OR CLEAR SILICON TO PREVENT MOISTURE FROM ENTERING THE CABINET.

REF STD SPEC SEC 8-31,8-32

City of Seattle	NOT TO SCALE	JOINT SIGNAL CONTROLLER/ SERVICE CABINET FOUNDATION DETAIL

REV DATE: JUNE 2014

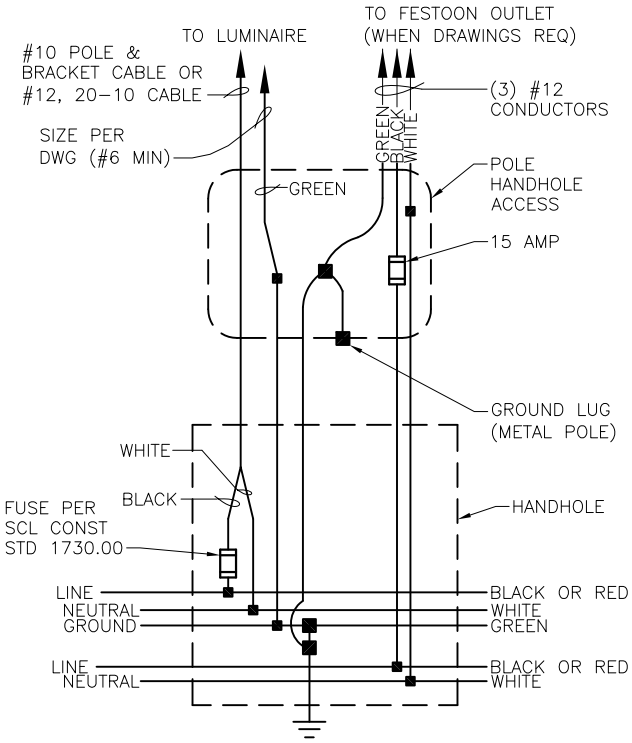

POLE WIRING DETAIL

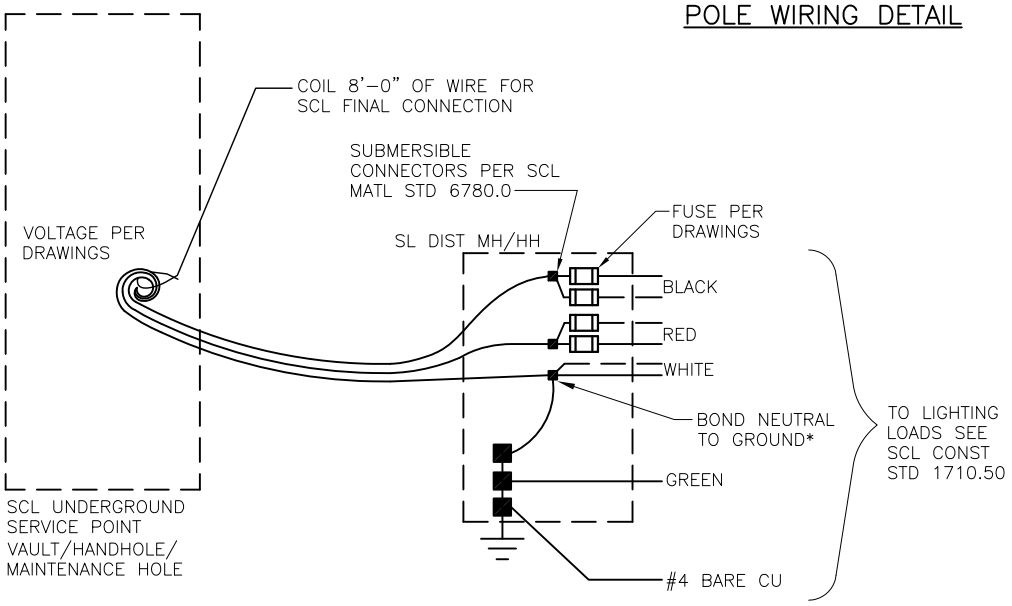

LIGHTING SERVICE

UNDERGROUND SERVICE CONNECTION

NOTES:

1. SCL REQ NEUTRAL TO BE BONDED TO GROUND IN SCL SERVICE POINT
2. BOND NEUTRAL TO GROUND AT ONLY ONE LOCATION
3. FOR JOINT SCL STREETLIGHT & SDOT TRAFFIC HANDHOLES, SEE SCL CONST STD 1810.05

REF STD SPEC SEC 8-30 & 8-31

City of Seattle	NOT TO SCALE	LIGHTING SERVICE CONNECTION & LIGHT POLE WIRING DETAIL

REV DATE: JUN 2014

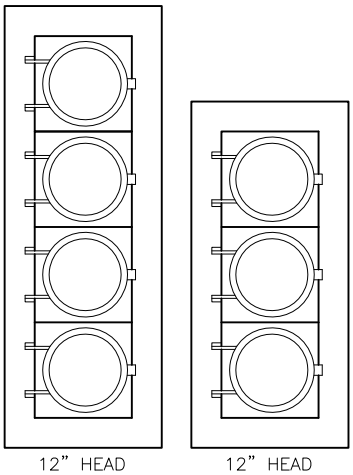

TYPICAL SIGNAL FACES

W/ TUNNEL VISORS &
5" BACKPLATE (LOUVERED)
1" YELLOW, DIAMOND GRADE RETRO REFLECTIVE TAPE

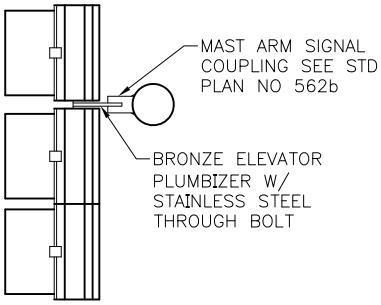

MAST ARM MOUNTING

SEE NOTE 1

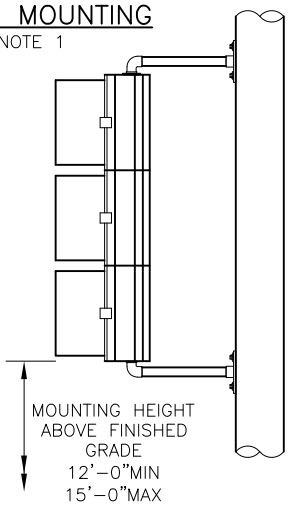

BRACKET MOUNTING

FOR SIGNAL HEAD BRACKET ASSEMBLY
SEE STD PLAN NO 511

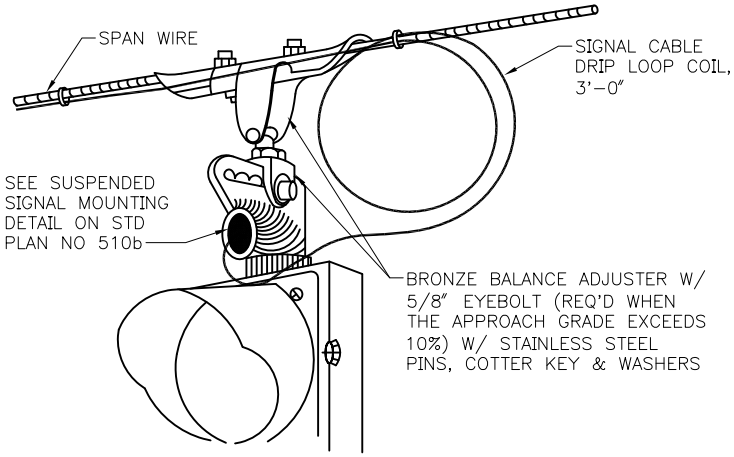

SIGNAL HANGER DETAIL

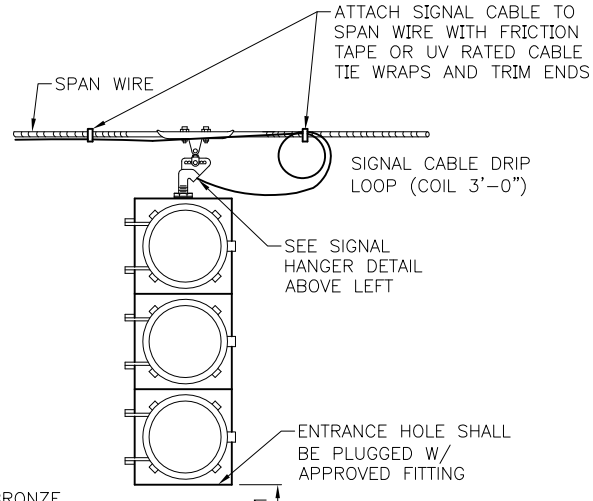

NOTES:

1. VERTICAL CLEARANCE: 17' MIN TO ROADWAY 19'-0" MAX (ON TRUCK ROUTES USE 18' TO 19')
2. BACKPLATES HAVE BEEN OMITTED FROM VARIOUS VIEWS FOR CLARITY

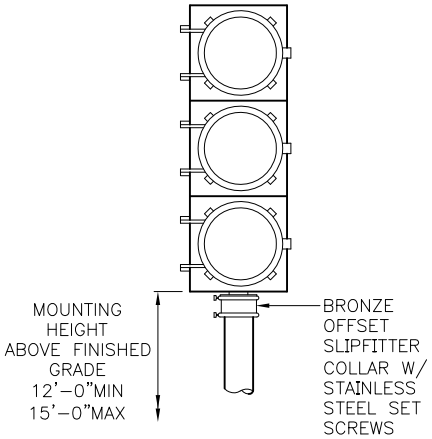

PEDESTAL TOP MOUNTING

FOR PEDESTAL SEE STD PLAN NO 524

REF STD SPEC SEC 8-31

City of Seattle	NOT TO SCALE	VEHICULAR SIGNAL MOUNTING

REV DATE: AUG 2014

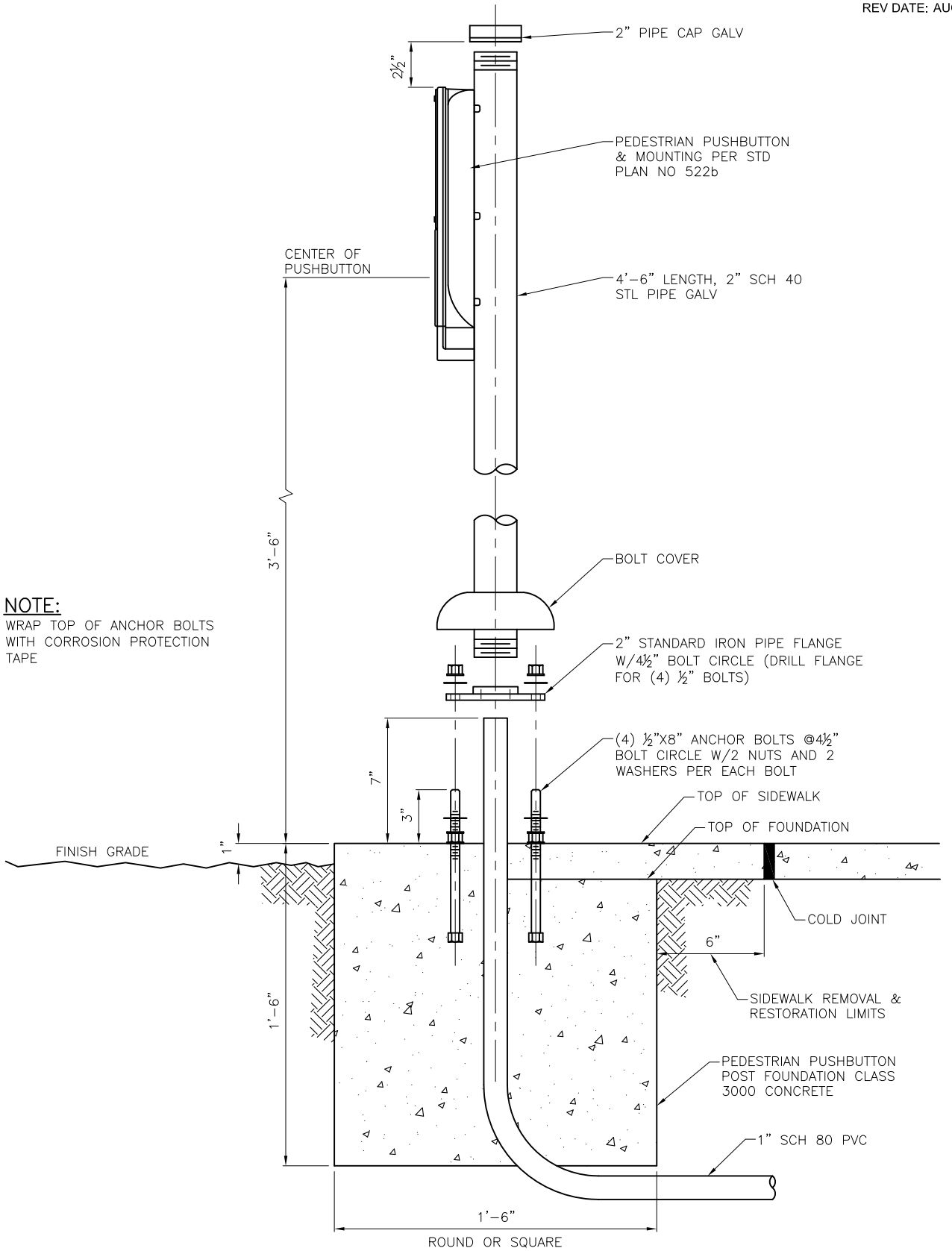

NOTE:
WRAP TOP OF ANCHOR BOLTS WITH CORROSION PROTECTION TAPE

REF STD SPEC SEC 8-31 & 8-32

City of Seattle	NOT TO SCALE	PEDESTRIAN PUSHBUTTON POST & FOUNDATION

REV DATE: JUN 2014

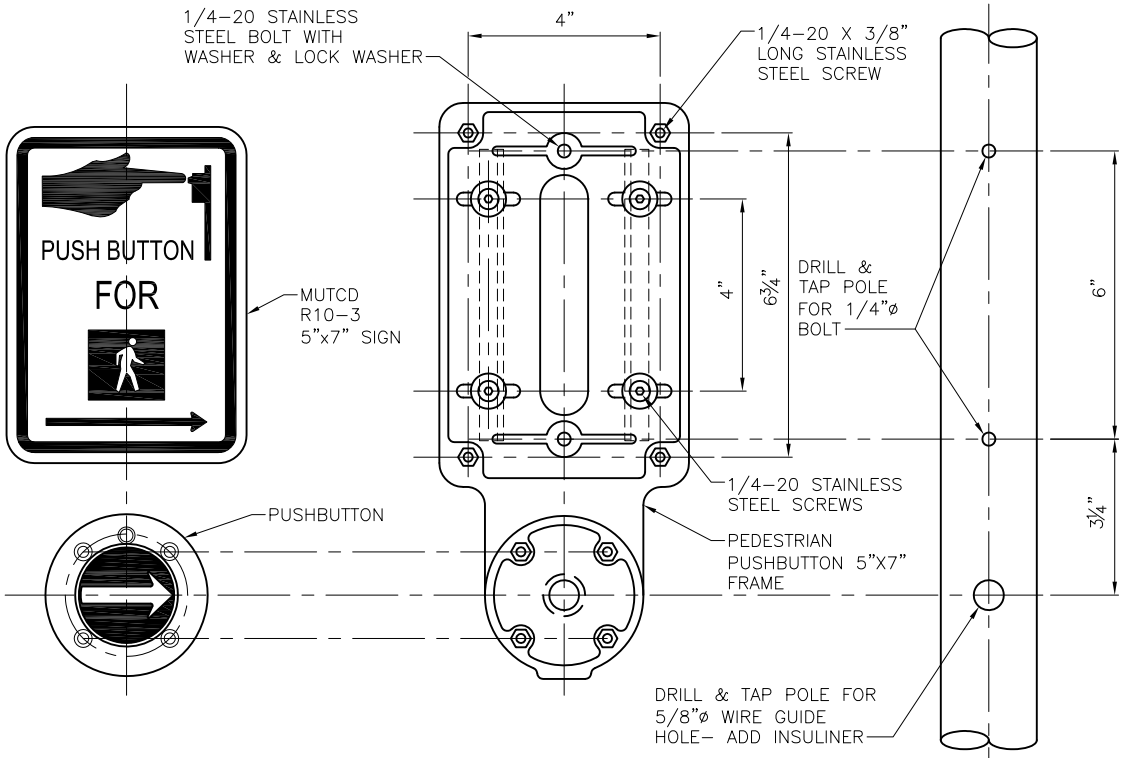

FRONT VIEWS

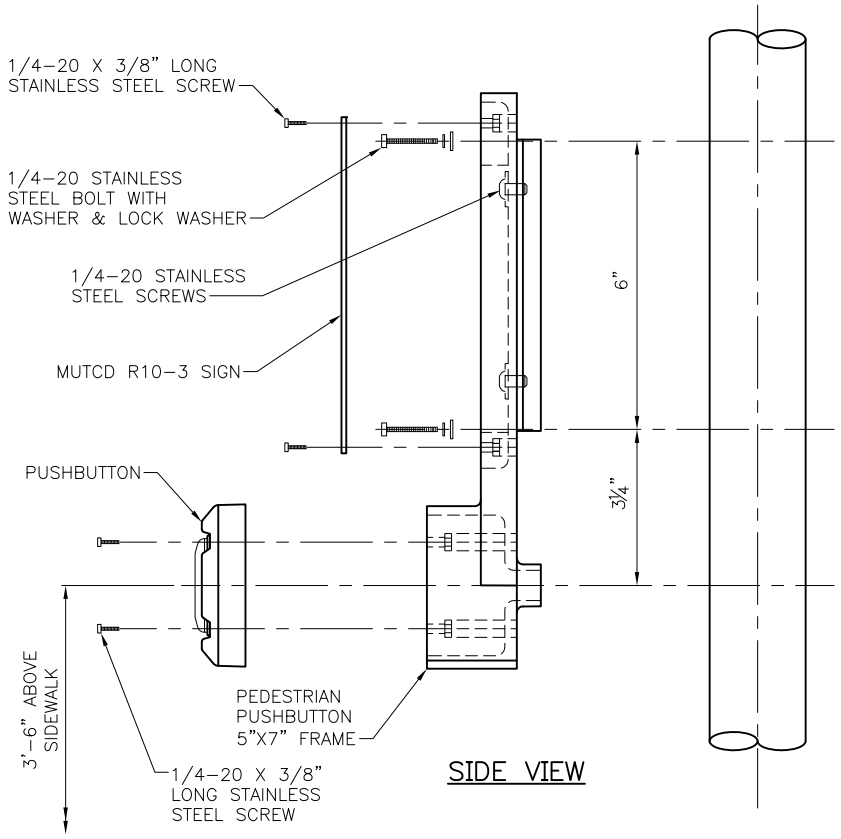

SIDE VIEW

NOTES:

1. PUSHBUTTON SHALL HAVE DIRECTIONAL ARROW AS SPECIFIED ON THE PLANS.
2. INSTALLATION OF TWO PEDESTRIAN PUSHBUTTON ASSEMBLIES SHALL BE APPROVED BY THE ENGINEER.
3. DETAIL SHOWS PUSHBUTTON INSTALLED ON METAL POLE. PUSHBUTTON INSTALLED ON OTHER MATERIALS SHALL BE PER MANUFACTURER'S RECOMMENDATION.

REF STD SPEC SEC 8-31

City of Seattle	NOT TO SCALE	PEDESTRIAN PUSHBUTTON ASSEMBLY

REV DATE: JUN 2014

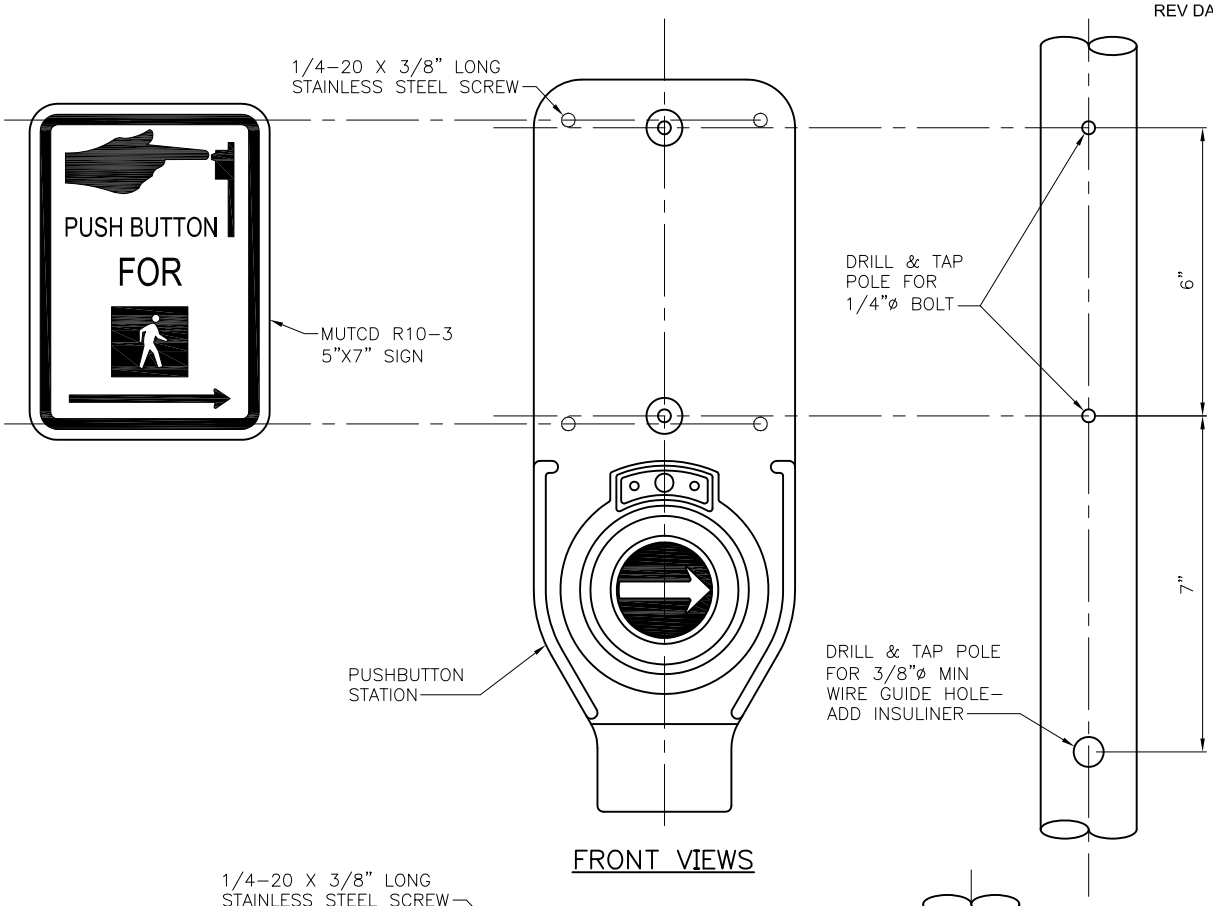

FRONT VIEWS

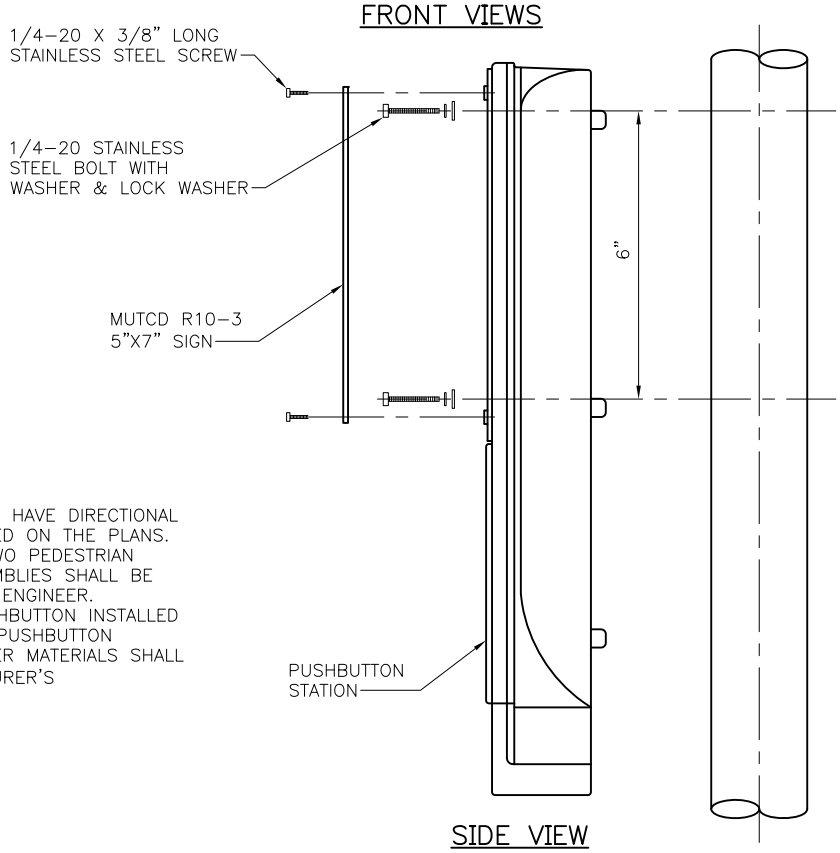

SIDE VIEW

NOTES:

1. PUSHBUTTON SHALL HAVE DIRECTIONAL ARROW AS SPECIFIED ON THE PLANS.
2. INSTALLATION OF TWO PEDESTRIAN PUSHBUTTON ASSEMBLIES SHALL BE APPROVED BY THE ENGINEER.
3. DETAIL SHOWS PUSHBUTTON INSTALLED ON METAL POLE. PUSHBUTTON INSTALLED ON OTHER MATERIALS SHALL BE PER MANUFACTURER'S RECOMMENDATION.

REF STD SPEC SEC 8-31

City of Seattle	NOT TO SCALE	ACCESSIBLE PEDESTRIAN SIGNAL (APS) PED. PUSHBUTTON ASSEM.

REV DATE: JAN 2015

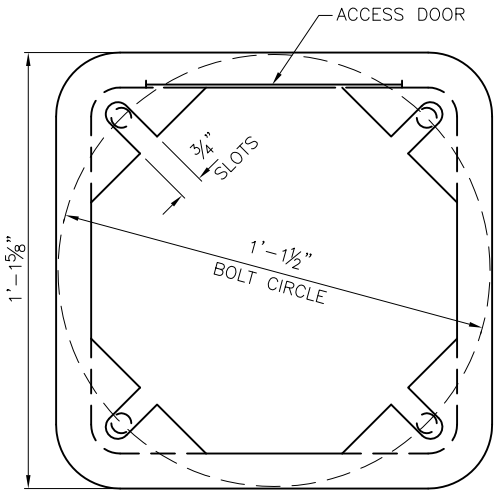

BOTTOM VIEW

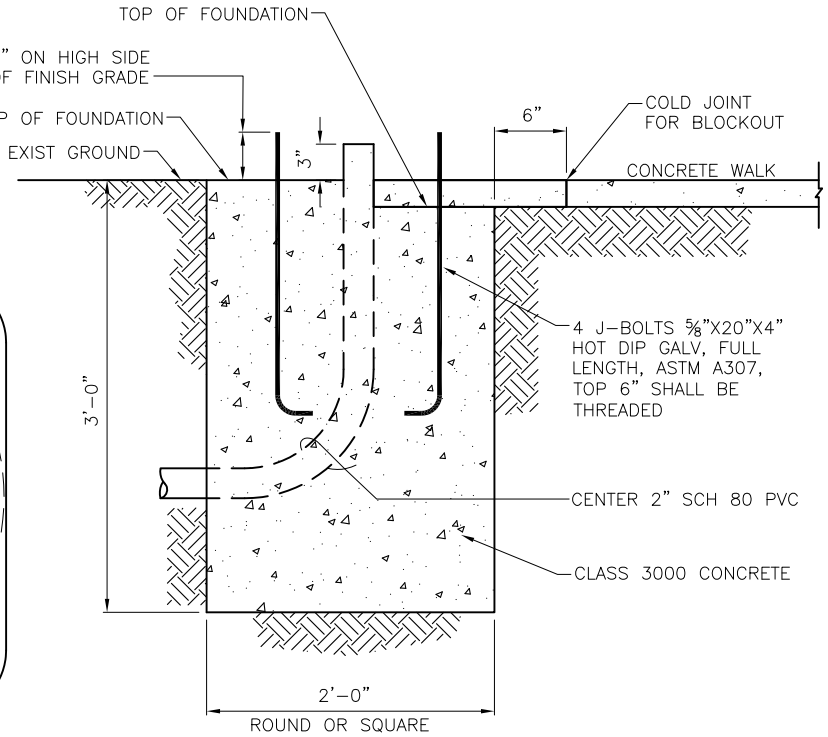

PEDESTAL FOUNDATION

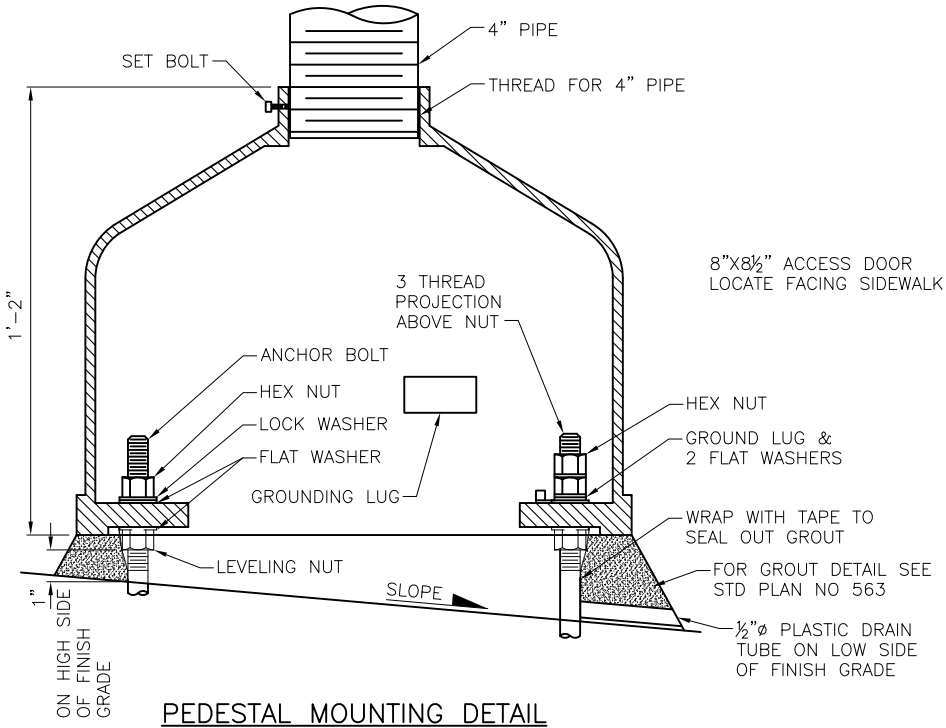

PEDESTAL MOUNTING DETAIL

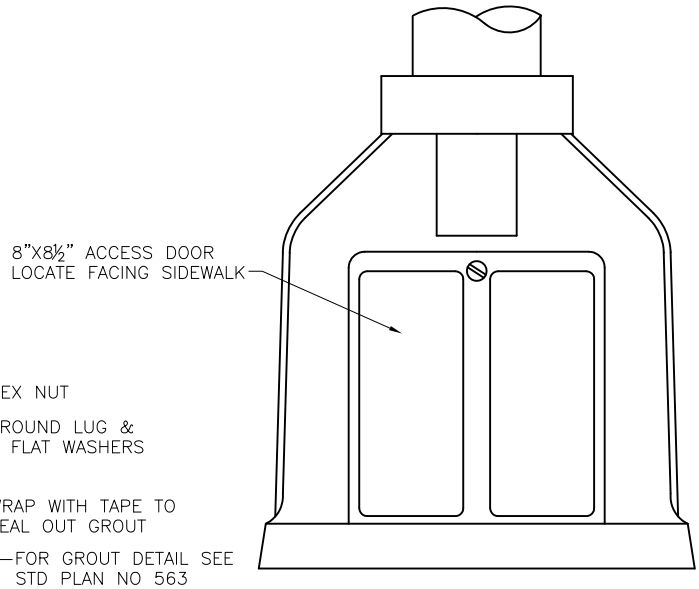

SQUARE BASE PEDESTAL

REF STD SPEC SEC 8-32

City of Seattle	NOT TO SCALE	PEDESTAL & FOUNDATION

REV DATE: JUN 2014

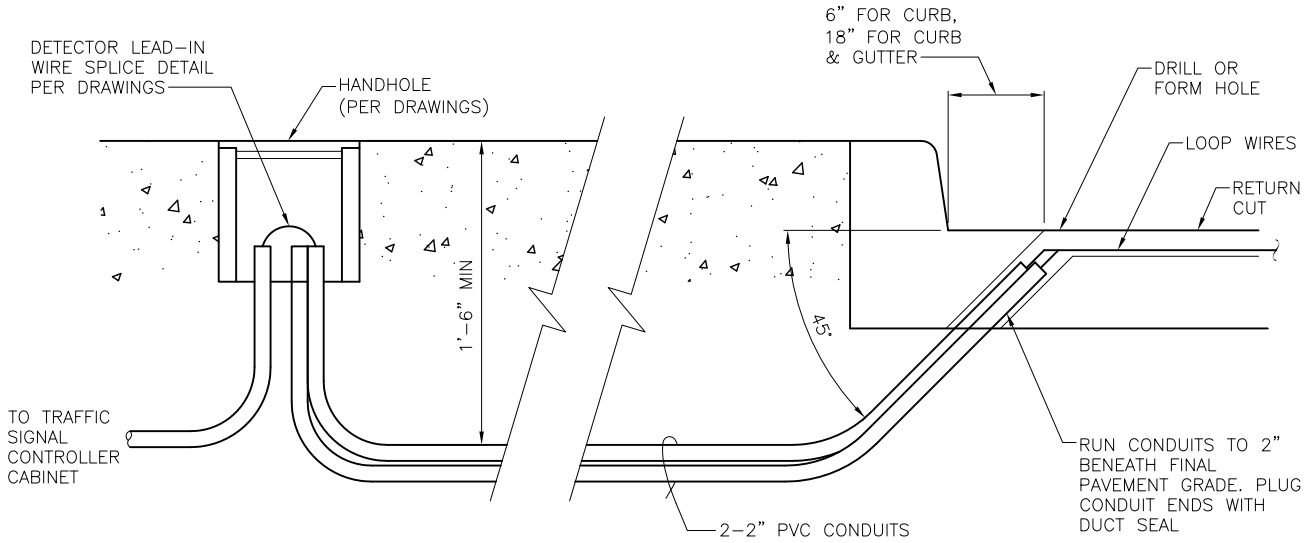

CURB/PAVEMENT ENTRANCE FOR DETECTOR LOOP WIRES

NOTES:

1. SHARP EDGE TOOLS SHALL NOT BE USED IN PLACING CONDUCTORS IN SAW CUTS
2. EACH PAIR OF LOOP WIRES IN THE RETURN CUT SHALL BE TWISTED A MINIMUM OF 3 TURNS PER FOOT AND MAY SHARE COMMON RETURN CUTS WITH OTHER TWISTED PAIRS
3. TAPE LOOP WIRE A MINIMUM OF 2 TURNS AT EACH CORNER
4. REMOVE SHARP CORNER EDGES IN SAW CUTS WHERE LOOP WIRE WILL BE BENT AROUND
5. PERFORM RESISTANCE AND CONTINUITY TESTS PRIOR TO SEALING LOOP WIRES
6. COIL 5'-0" OF LOOP WIRE IN HANDHOLE

REF STD SPEC SEC 8-31

City of Seattle	NOT TO SCALE	DETECTOR LOOP LEAD-IN

REV DATE: AUG 2014

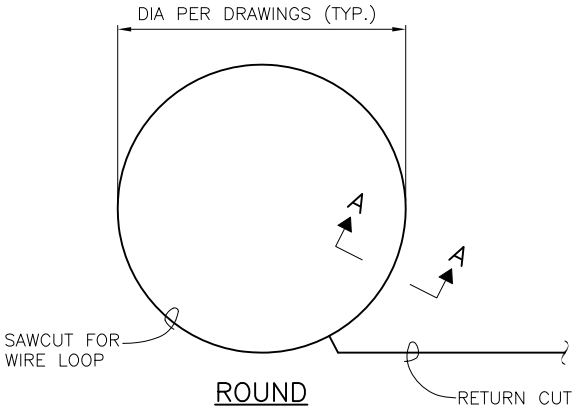

ROUND

DIPOLE LOOP DETECTOR

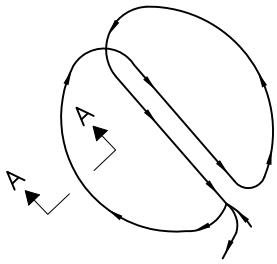

WINDING DETAIL

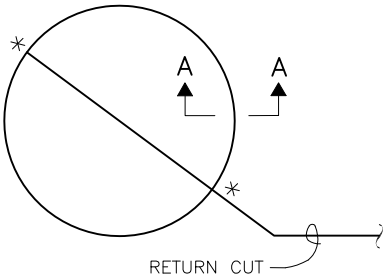

ROUND

QUADRIPOLE LOOP DETECTOR

*NOTE:
OVERLAP CUT FOR FULL DEPTH AT CORNERS (TYP) CHIP 1" BACK THEN ROUND OFF CORNERS WHERE LOOP WIRE WILL BE BENT 90° OR LESS.

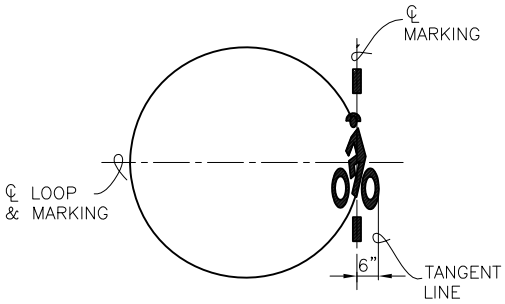

ROUND

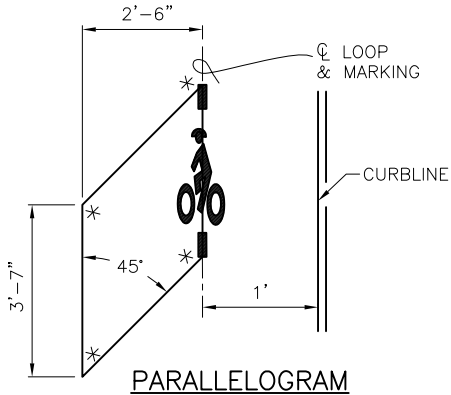

PARALLELOGRAM

BICYCLE DIPOLE

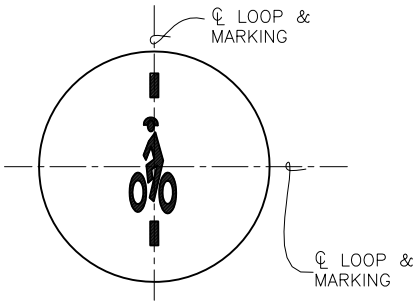

ROUND

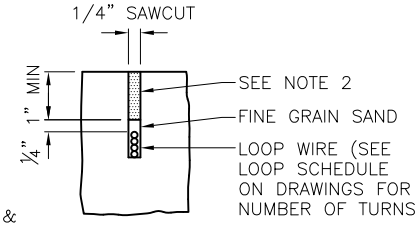

SECTION A–A

BICYCLE QUADRIPOLE

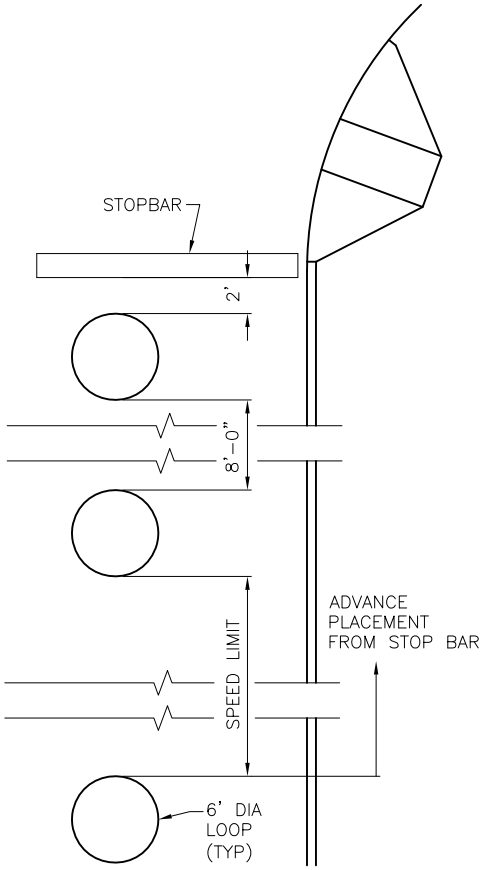

STANDARD LOOP SPACING

NOTES:
1. SEE STD PLAN NO. 725 FOR BICYCLE DETECTOR PAVEMENT MARKER DETAIL.
2. FILL CUT AFTER VERTICAL PLACEMENT AND TESTING WITH HOT PAVING GRADE LIQUID ASPHALT ASTM D 312 TYPE III OR QUICK SETTING HIGH STRENGTH GROUT

REF STD SPEC SEC 8-31

City of Seattle	NOT TO SCALE	DETECTOR LOOP DETAILS

REV DATE: NOV 2015

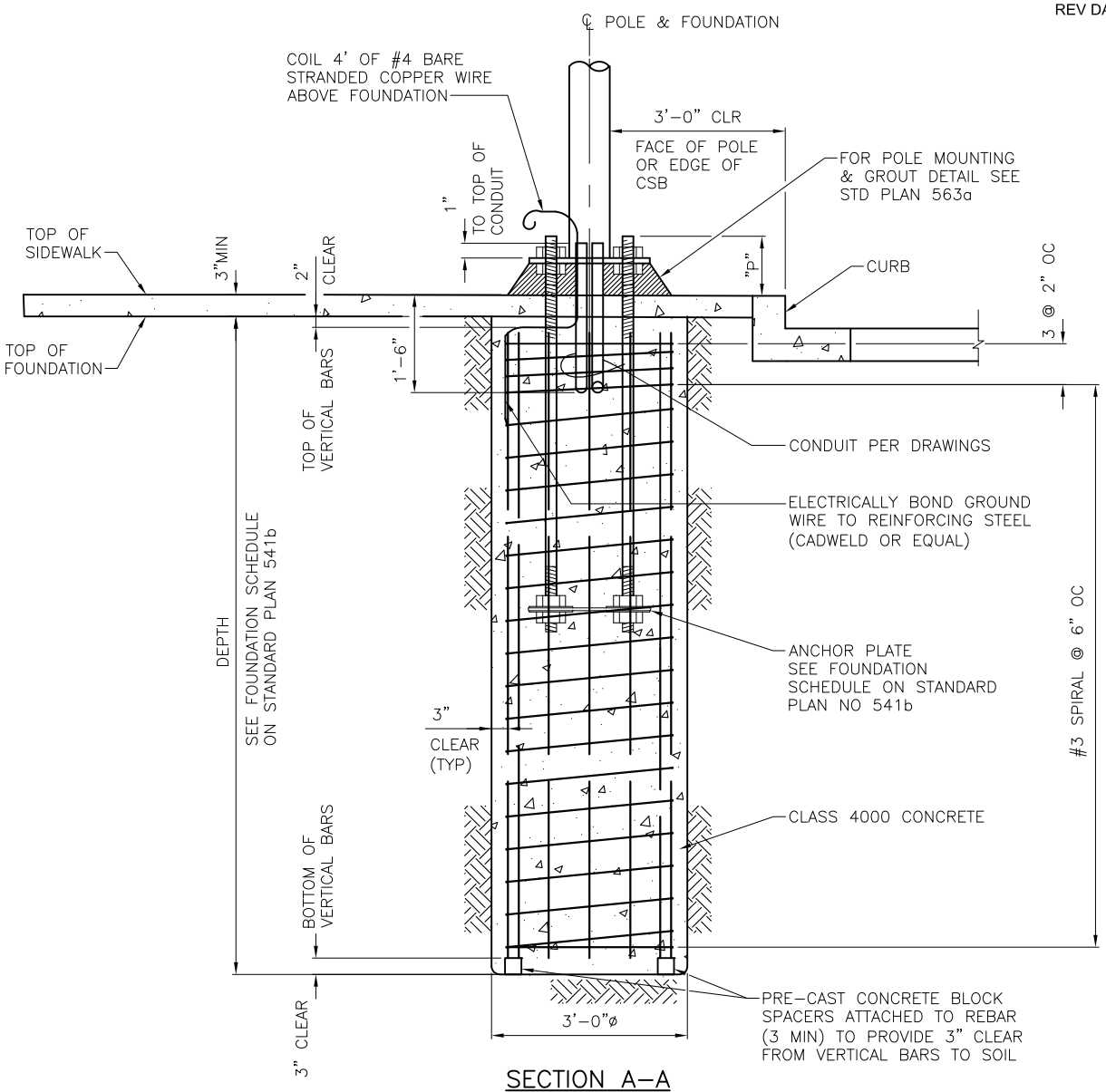

SECTION A–A

NOTE:
FOR STEEL MAST ARM POLE FOUNDATION SEE STD PLAN NO 562b

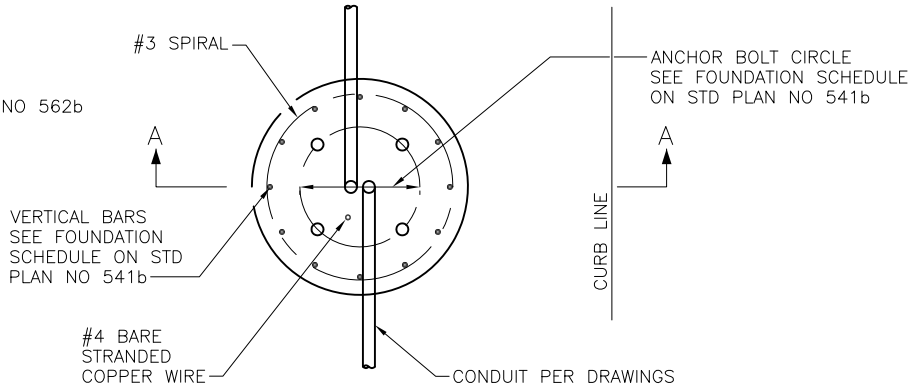

PLAN VIEW
STRAIN POLE FOUNDATION IN SIDEWALK

REF STD SPEC SEC 8-32, 6-02

City of Seattle	NOT TO SCALE	STRAIN POLE FOUNDATION DETAIL (TYPE T, V, X & Z)

REV DATE: OCT 2015

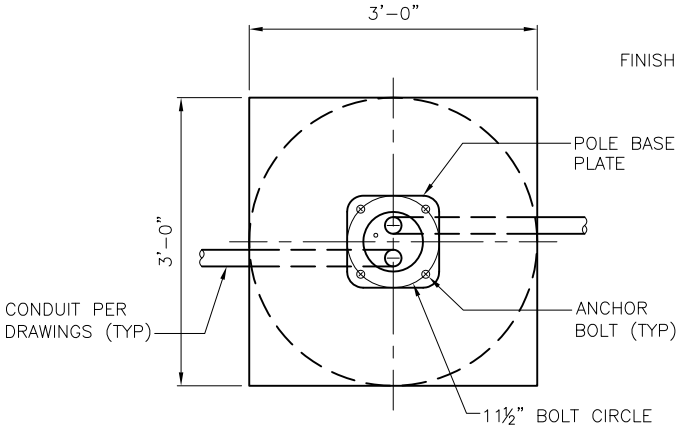

PLAN

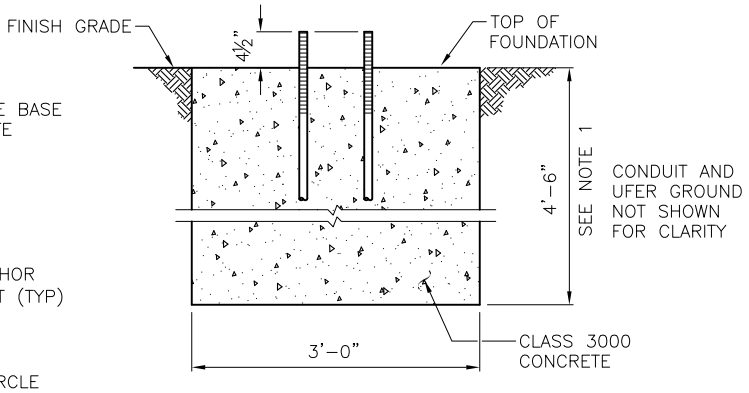

IN EARTH

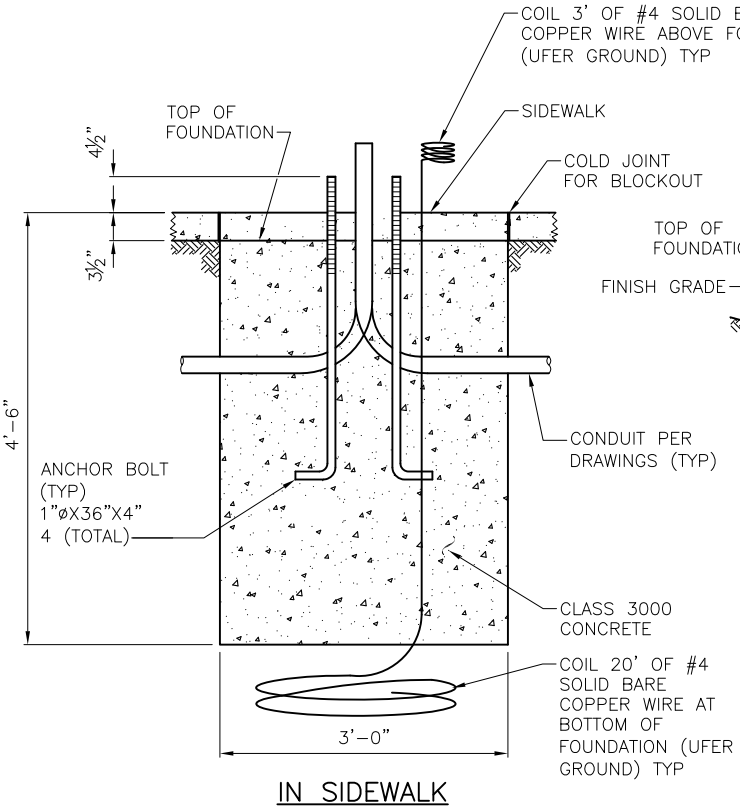

IN SIDEWALK

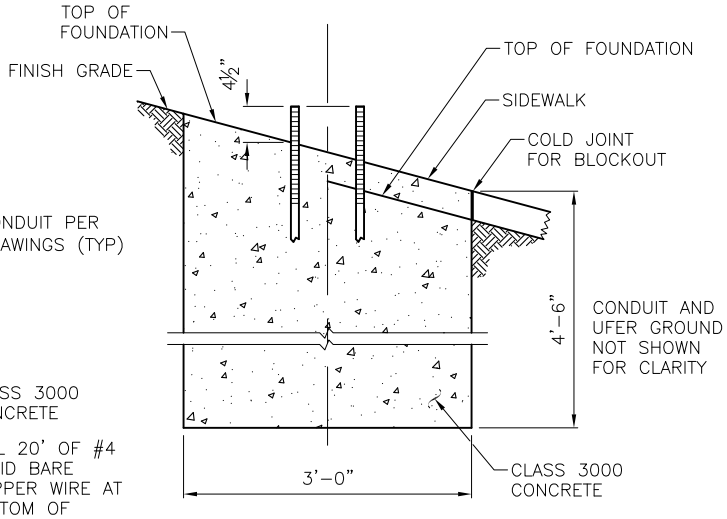

ON AN INCLINE

NOTES:

1. BOLT CIRCLE: 11½" TYP
2. SEE STD PLAN NO 563a FOR POLE MOUNTING AND GROUT DETAIL
3. ANCHOR BOLTS SHALL BE HOT DIP GALVANIZED ASTM A153 OR F2329, FULL LENGTH AND FABRICATED FROM ASTM F1554 OR A576 WITH 12" THREADS ON TOP
4. UFER GROUND NOT SHOWN IN ALL DETAILS FOR CLARITY

REF STD SPEC SEC 8-32

City of Seattle	NOT TO SCALE	STREET LIGHT POLE FOUNDATIONS

REV DATE: OCT 2015

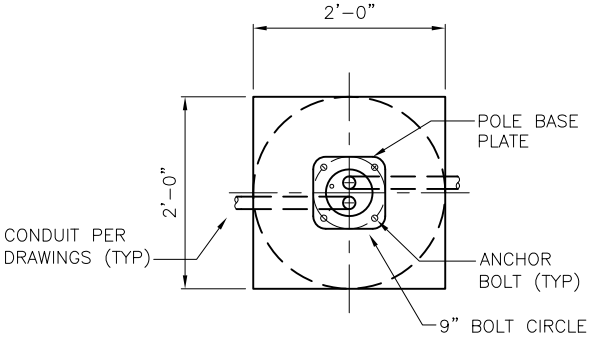

PLAN

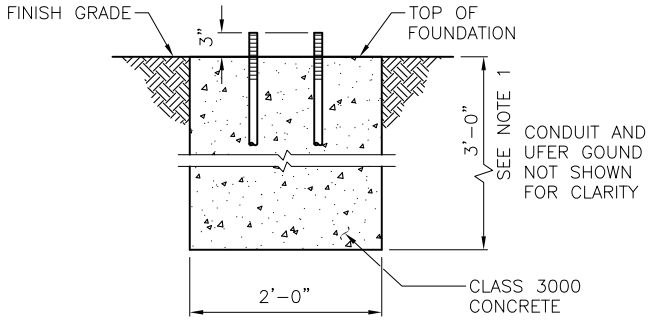

IN EARTH

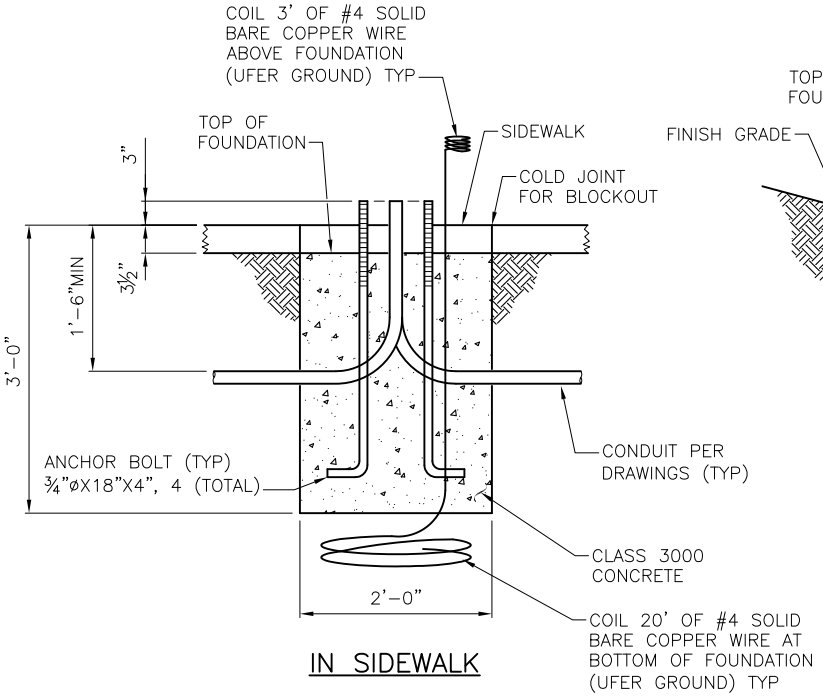

IN SIDEWALK

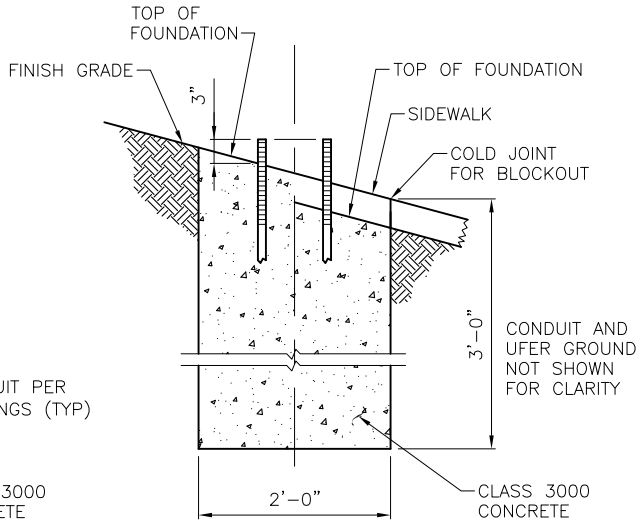

ON AN INCLINE

NOTES:

1. BOLT CIRCLE: 9" TYP
2. SEE STD PLAN NO 563a FOR POLE MOUNTING AND GROUT DETAIL
3. ANCHOR BOLTS SHALL BE HOT DIP GALVANIZED TO ASTM A153 OR F2329, FULL LENGTH AND FABRICATED FROM ASTM F1554 OR A576 WITH 8" OF THREADS ON TOP
4. SEE SCL MATERIAL STANDARD 5756.09 FOR POLES
5. UFER GROUND NOT SHOWN IN ALL DETAILS FOR CLARITY

REF STD SPEC SEC 8-32

City of Seattle	NOT TO SCALE	PEDESTRIAN STREET LIGHT POLE FOUNDATIONS

REV DATE: AUG 2014

NOTES:

1. ALL NON–DELIBERATE TRAFFIC PULL BOX COVERS MUST COMPLY WITH ALL TEST PROVISIONS OF ANSI/SCTE 77 2010 "SPECIFICATION FOR UNDERGROUND ENCLOSURE INTEGRITY", & MUST MEET THE TIER 15 APPLICATION. MARKING SHOWING THE TIER 15 RATING MUST BE EMBOSSED IN THE TOP SURFACE OF THE COVER.
2. ALL NON–DELIBERATE TRAFFIC PULL BOXES MUST COMPLY WITH ALL TEST PROVISIONS OF ANSI/SCTE 77 2012 "SPECIFICATION FOR UNDERGROUND ENCLOSURE INTEGRITY", & MUST MEET THE TIER 22 APPLICATION. MARKINGS SHOWING THE TIER 22 RATING MUST BE LABELED OR STENCILED ON THE INSIDE & OUTSIDE OF THE BOX.
3. ALL NON–DELIBERATE TRAFFIC PULL BOXES & COVERS MUST BE MADE OF POLYMER CONCRETE WITH FIBERGLASS REINFORCEMENT. THE BOX MUST HAVE CONTINUOUS FIBERGLASS CLOTH REINFORCEMENT ON THE INSIDE & OUTSIDE PERIMETERS. THE COVER MUST HAVE A MINIMUM OF TWO LAYERS OF FIBERGLASS CLOTH REINFORCEMENT.
4. ALL NON–DELIBERATE TRAFFIC PULL BOXES & COVERS MUST BE TESTED & CERTIFIED, MEETING ALL TEST PROVISIONS ON THE ANSI/SCTE 77, TO THE 66WF, MEETING ALL TEST PROVISION OF THE LATEST REVISION OF ANSI/SCTE 77.
5. PULL SLOTS MUST BE RATED FOR MINIMUM PULL OUT OF 3,000 POUNDS.
6. TYPE 4 HANDHOLE SHALL BE INSTALLED IN ROADWAYS PARKING LOTS, ETC. ALL COVERS MUST BE COMPLETE WITH A MOLDED LOGO, MANUFACTURES NAME & TIER RATING LOGO (NO GLUE IN LOGO). LOGO SHALL READ "TC" AND/OR "SL" UNLESS STATED OTHERWISE BY THE CITY OF SEATTLE.
7. THE GROUND ROD SHALL EXTEND 4" ABOVE THE BOTTOM OF THE HANDHOLE OR MINERAL AGGREGATE.
8. FOR PAVEMENT DEPTH GREATHER THAN 7" USE FRAME EXTENSIONS (SEE STD PLAN NO 231) TO BRING THE COVER UP THE THE LEVEL OF THE FINISHED PAVEMENT WITHOUT EMBEDDING THE BOTTOM FLANGE OF THE CASTING IN THE PAVEMENT.
9. A 4' LENGTH OF #6 THWN OR THHN COPPER WIRE SHALL BE SECURED FROM THE HANDHOLE COVER TO THE FRAME. WITH A 4'–0" LENGTH FROM FRAME THAT CAN BE HOOKED UP TO A GROUND ROD.
10. ALL HANDHOLE COVERS AND FRAMES SHALL HAVE A NON–SKID SURFACE (SEE STD SPEC SEC 9–34.6)

HANDHOLE SCHEDULE

HANDHOLE TYPE	TOP UNIT INSIDE DIMENSION			EXTENSION UNIT(E)	COVER DIMENSIONS	
	L	W	H	H	L	W
1	24"	13"	12"	12"	24"	13"
2	30"	17"	12"	12"	30"	17"
3	36"	24"	18"	12"	36"	24"
4	24"ø		VAR	NA	NA	NA
5	30"	48"	36"	NA	30"	48"
6	48"	48"	48"	NA	48"	48"
GRHH	8"ø			NA		

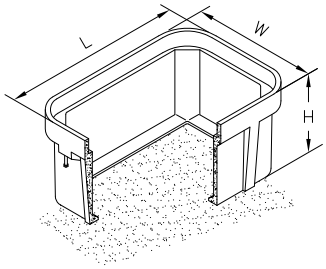

TYPE 3 HANDHOLE
(COVER SAME AS TYPE 5)

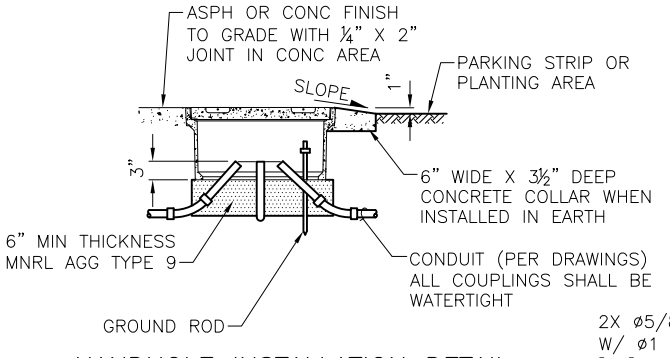

HANDHOLE INSTALLATION DETAIL

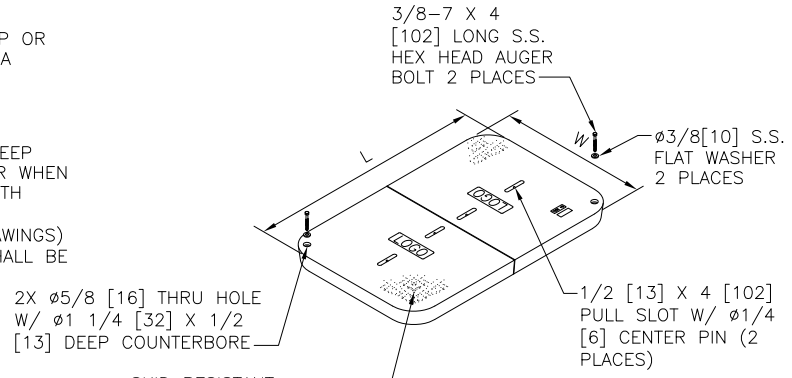

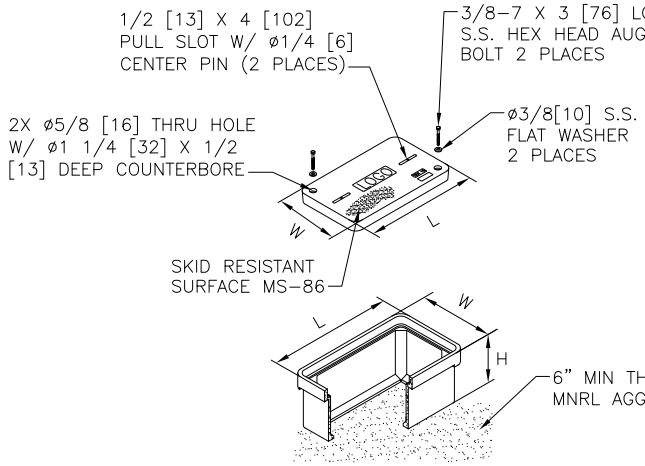

TYPE 1 & 2 HANDHOLE

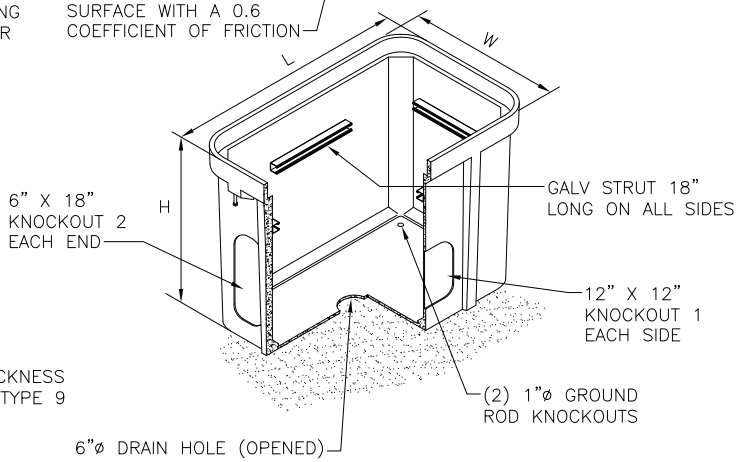

TYPE 5 HANDHOLE

REF STD SPEC SEC 8-33

City of Seattle	NOT TO SCALE	POLYMER CONCRETE HANDHOLES

REV DATE: FEB 2016

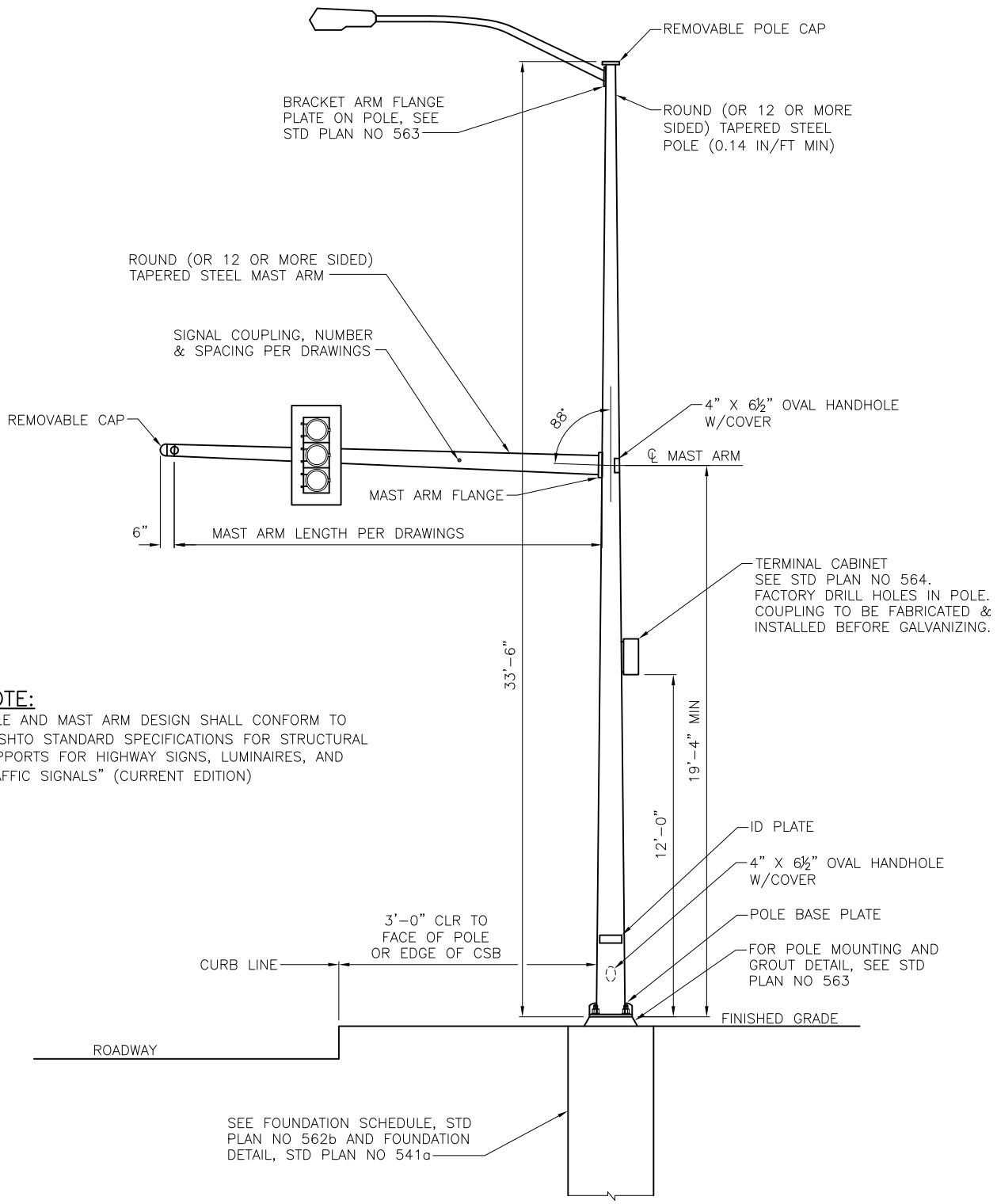

NOTE:
POLE AND MAST ARM DESIGN SHALL CONFORM TO "AASHTO STANDARD SPECIFICATIONS FOR STRUCTURAL SUPPORTS FOR HIGHWAY SIGNS, LUMINAIRES, AND TRAFFIC SIGNALS" (CURRENT EDITION)

REF STD SPEC SEC 8-32

City of Seattle	NOT TO SCALE	STEEL MAST ARM POLE

REV DATE: FEB 2016

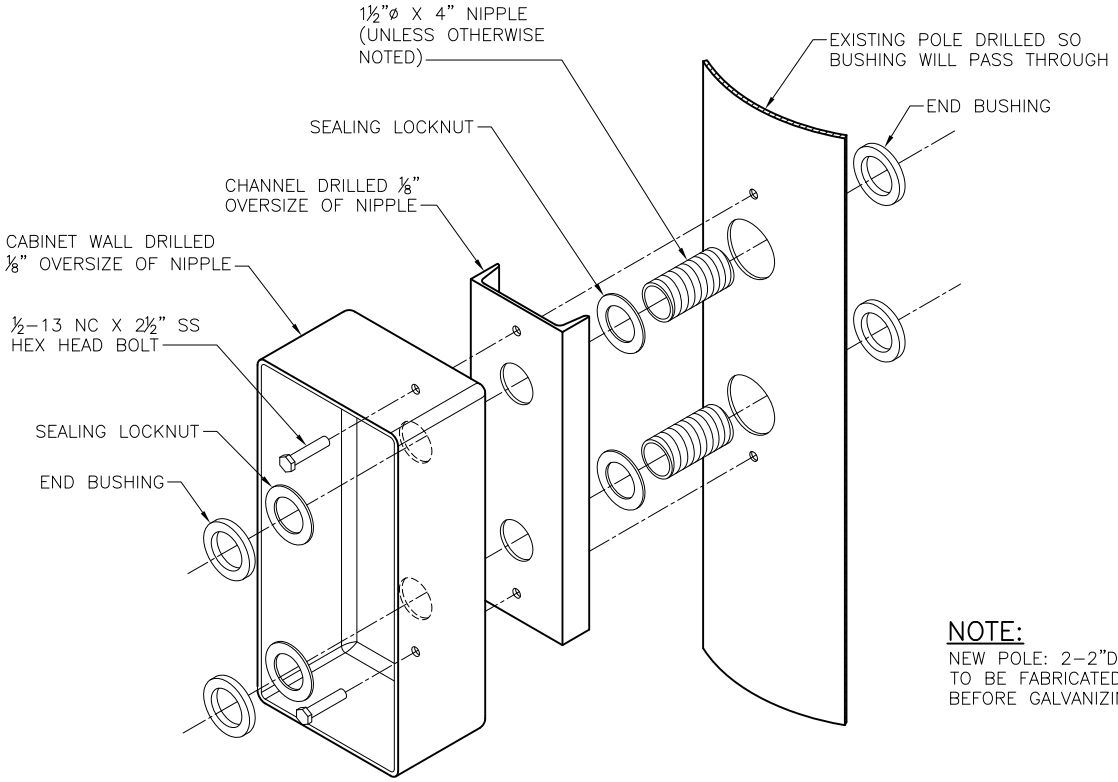

NOTE:
NEW POLE: 2–2"DIA COUPLING TO BE FABRICATED & INSTALLED BEFORE GALVANIZING

WIREWAY ISOMETRIC DETAIL

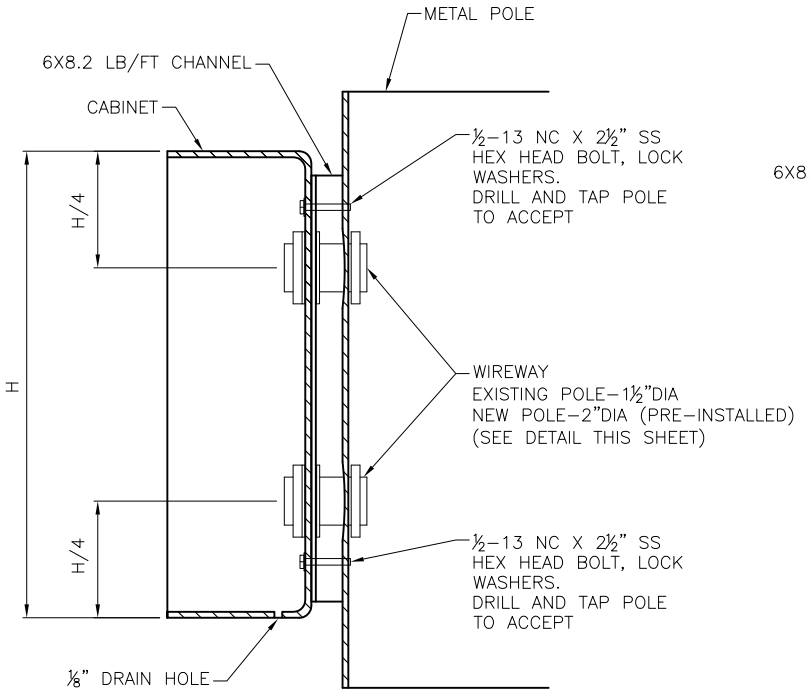

SECTION A–A

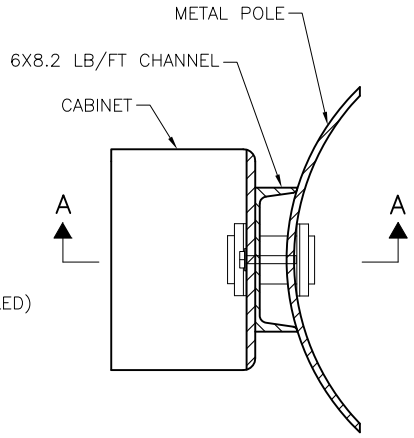

PLAN

REF STD SPEC SEC 8-32

City of Seattle	NOT TO SCALE	TERMINAL CABINET POLE MOUNTING

REV DATE: FEB 2016

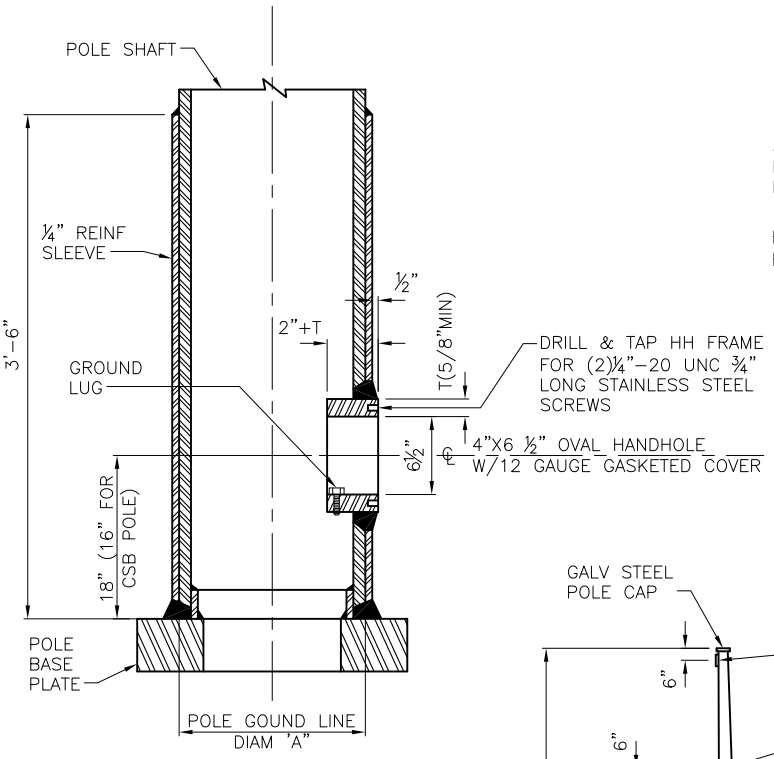

POLE BASE DETAIL

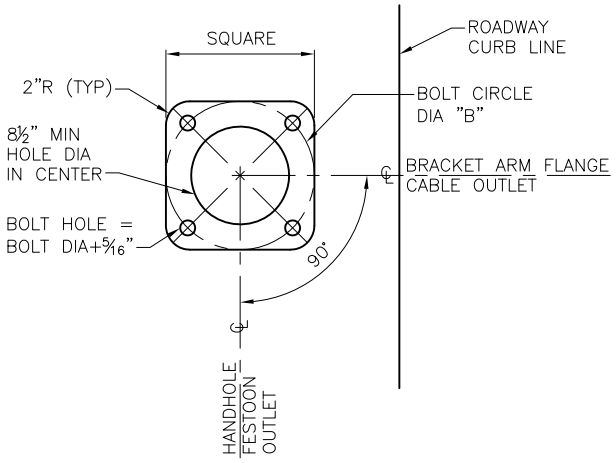

POLE BASE PLATE

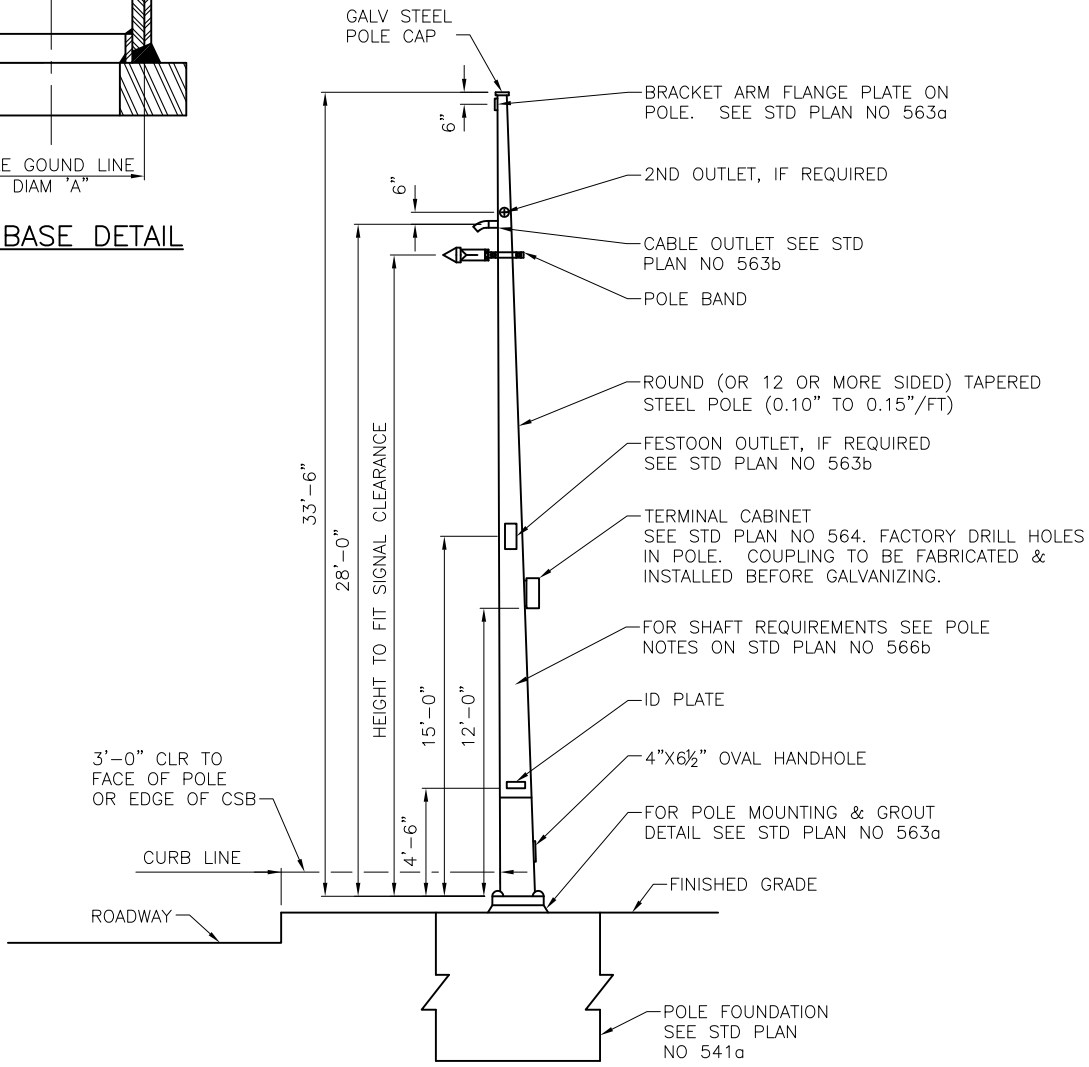

STRAIN POLE

REF STD SPEC SEC 8-32

City of Seattle	NOT TO SCALE	STRAIN POLE DETAILS (TYPE V, X & Z POLES)

REV DATE: FEB 2016

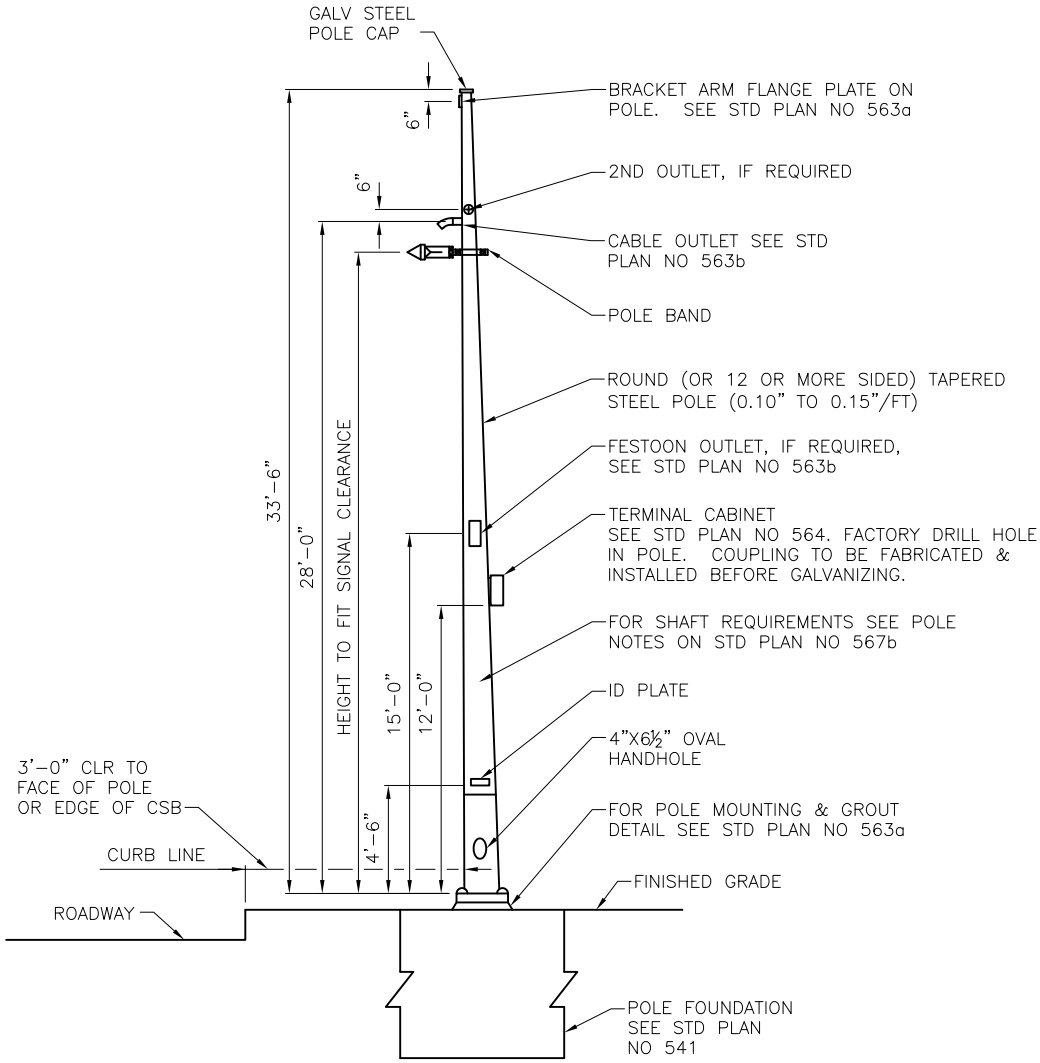

STRAIN POLE

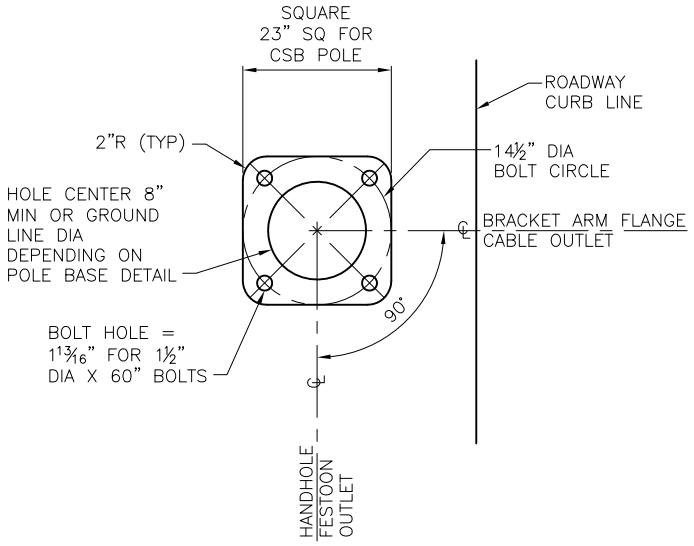

POLE BASE PLATE

REF STD SPEC SEC 8-32

City of Seattle	NOT TO SCALE	TYPE T STRAIN POLE DETAILS TRAFFIC SIGNAL ONLY

REV DATE: AUG 2014

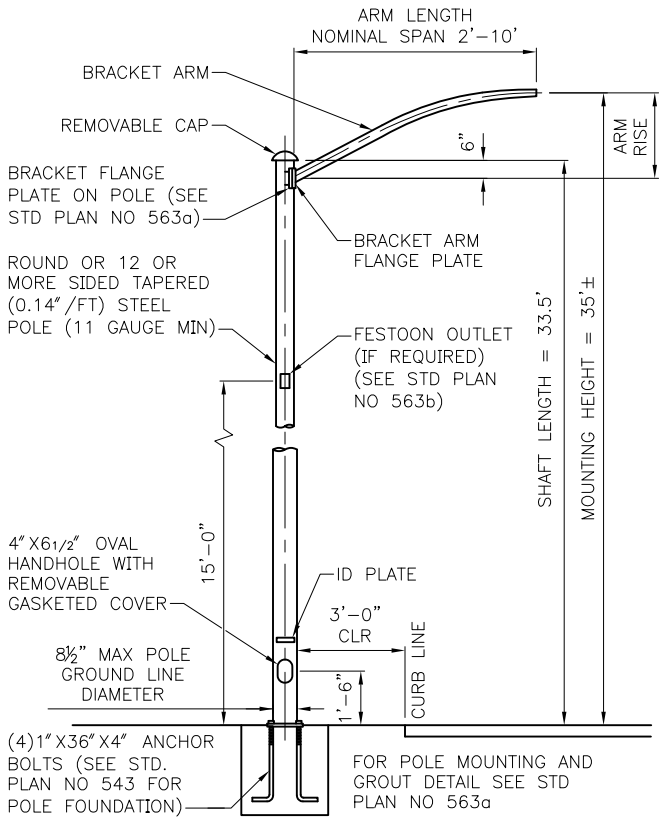

STEEL STREET LIGHT POLE

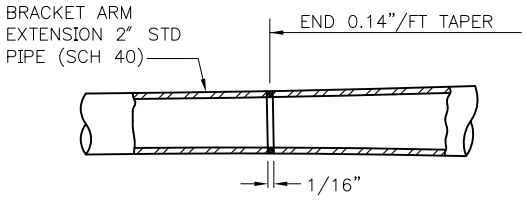

BRACKET ARM EXTENSION IF REQUIRED

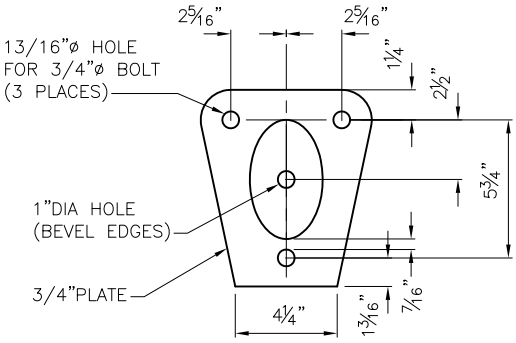

NOTE:
FLANGE DIMENSIONS AND HOLE LOCATIONS MUST MATCH THOSE ON FLANGE PLATE ON POLE (SEE STD PLAN NO 563a)

BRACKET ARM FLANGE PLATE

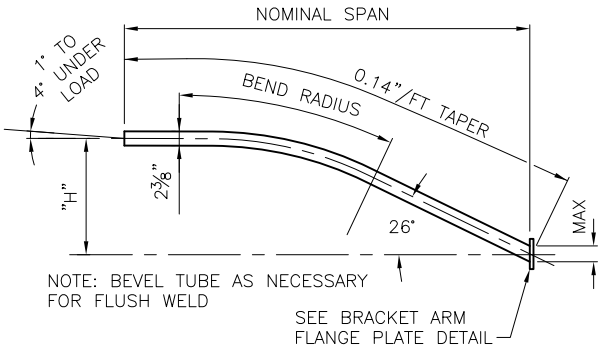

2' THRU 10' BRACKET ARMS

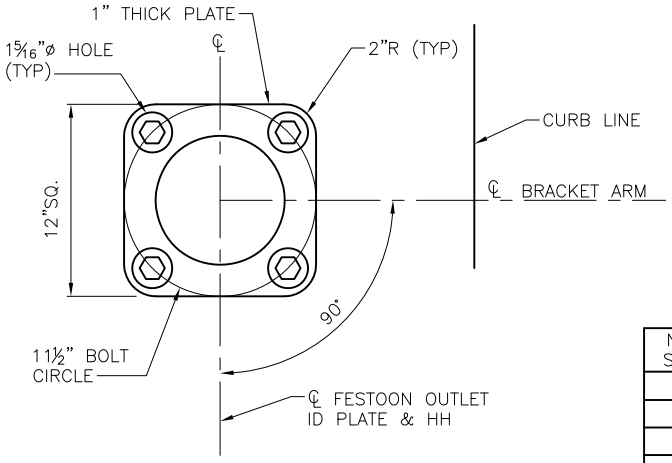

POLE BASE PLATE

NOM SPAN	H*	BEND RADIUS	TUBE REQUIREMENT
2'	5¼"	–	2" STD PIPE
4'	12"	6'	11 GAUGE
6'	18"	9'	11 GAUGE
8'	24"	13'	11 GAUGE
10'	30"	15'	11 GAUGE

MATERIAL SPECIFICATION
PLATE AND SHAPES:
ASTM A36
POLE SHAFTS:
ASTM A570
GR 40 MIN.
ANCHOR BOLTS:
ASTM A307
BRACKET ARM FLANGE PLATE BOLT: ASTM A325

NOTE:
1. ALL OTHER ARM LENGTHS REQUIRE SCL REVIEW AND APPROVAL

* THESE DIMENSIONS ARE ONLY ILLUSTRATIVE OF THE GENERAL OUTLINE AND MATERIALS USED IN THE CONSTRUCTION OF THESE ARMS AND ARE NOT INTENDED TO EXCLUDE MANUFACTURER'S STANDARD PRODUCTS.

REF STD SPEC SEC 8-32

City of Seattle	NOT TO SCALE	STEEL STREET LIGHT POLE WITH BRACKET ARM

REV DATE: AUG 2015

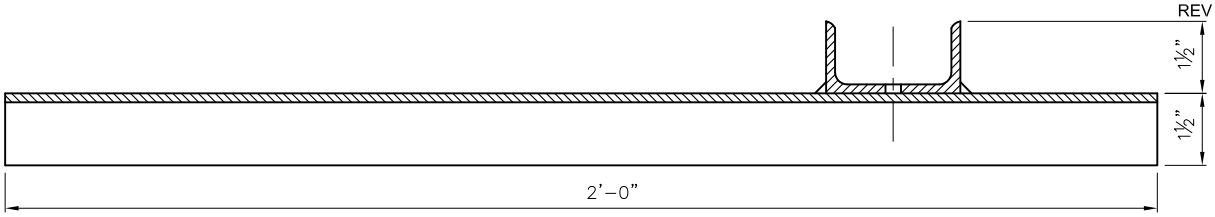

SECTION A–A

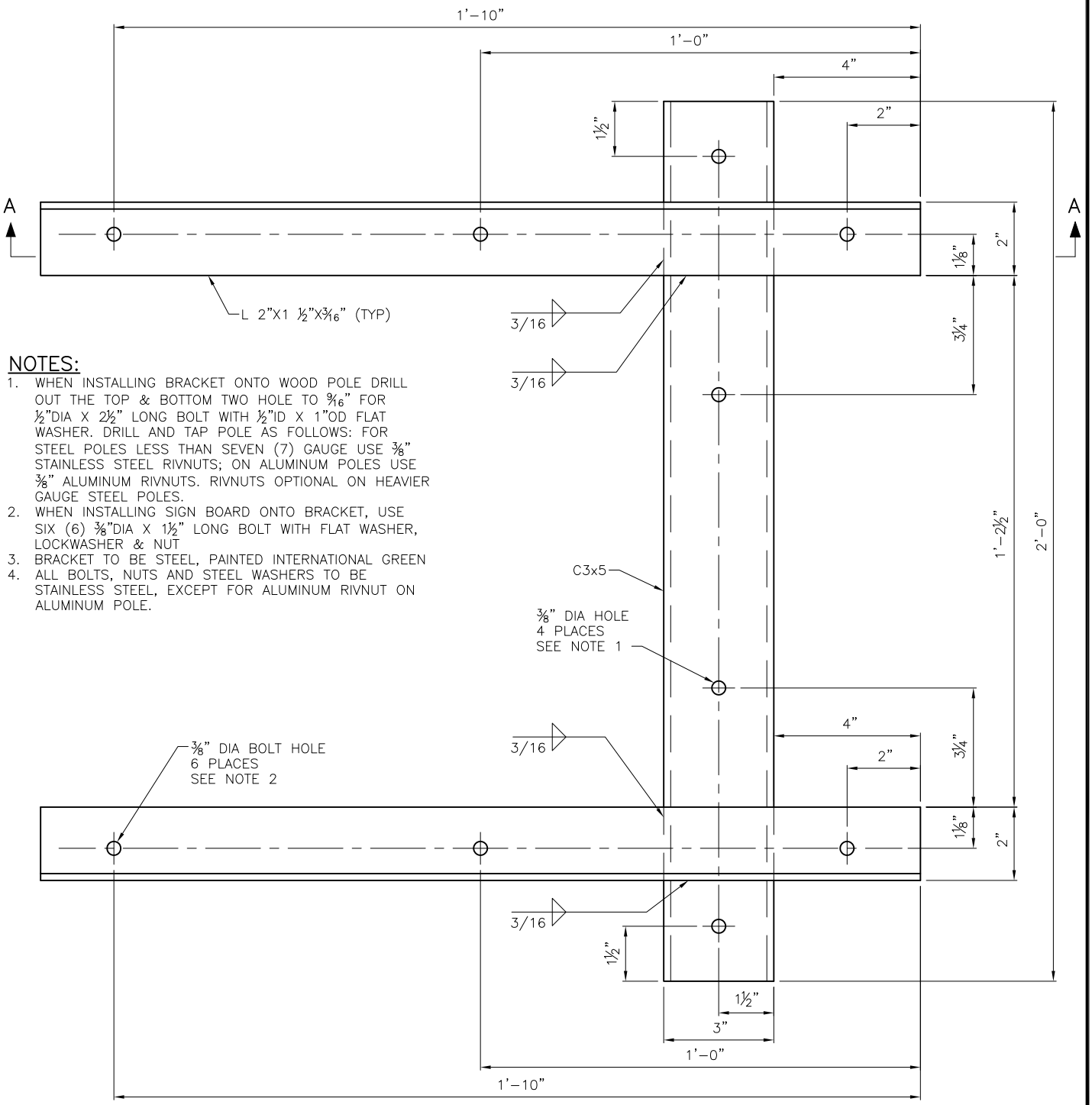

NOTES:

1. WHEN INSTALLING BRACKET ONTO WOOD POLE DRILL OUT THE TOP & BOTTOM TWO HOLE TO 9/16" FOR ½"DIA X 2½" LONG BOLT WITH ½"ID X 1"OD FLAT WASHER. DRILL AND TAP POLE AS FOLLOWS: FOR STEEL POLES LESS THAN SEVEN (7) GAUGE USE ⅜" STAINLESS STEEL RIVNUTS; ON ALUMINUM POLES USE ⅜" ALUMINUM RIVNUTS. RIVNUTS OPTIONAL ON HEAVIER GAUGE STEEL POLES.
2. WHEN INSTALLING SIGN BOARD ONTO BRACKET, USE SIX (6) ⅜"DIA X 1½" LONG BOLT WITH FLAT WASHER, LOCKWASHER & NUT
3. BRACKET TO BE STEEL, PAINTED INTERNATIONAL GREEN
4. ALL BOLTS, NUTS AND STEEL WASHERS TO BE STAINLESS STEEL, EXCEPT FOR ALUMINUM RIVNUT ON ALUMINUM POLE.

REF STD SPEC SEC 8-21

City of Seattle	NOT TO SCALE	SDS BRACKET FOR STEEL OR WOOD POLES

REV DATE: OCT 2014

NOTES:
1. "T" = THERMOPLASTIC
2. L-28AT INCLUDES BICYCLE SYMBOL AND ARROW

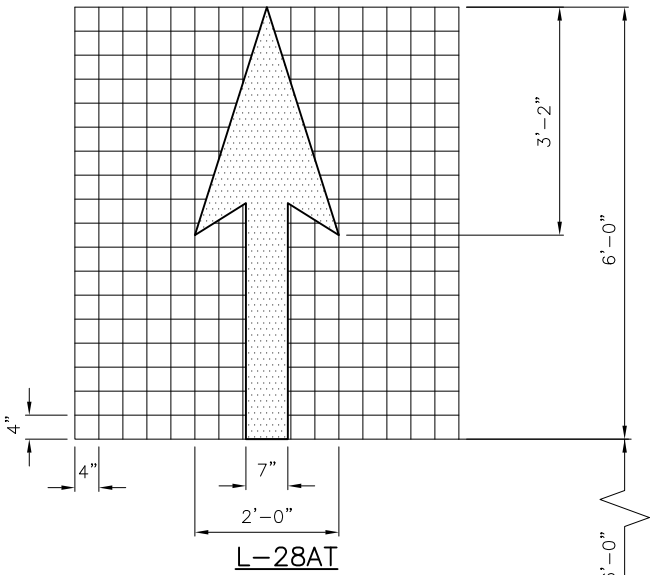

L-28AT

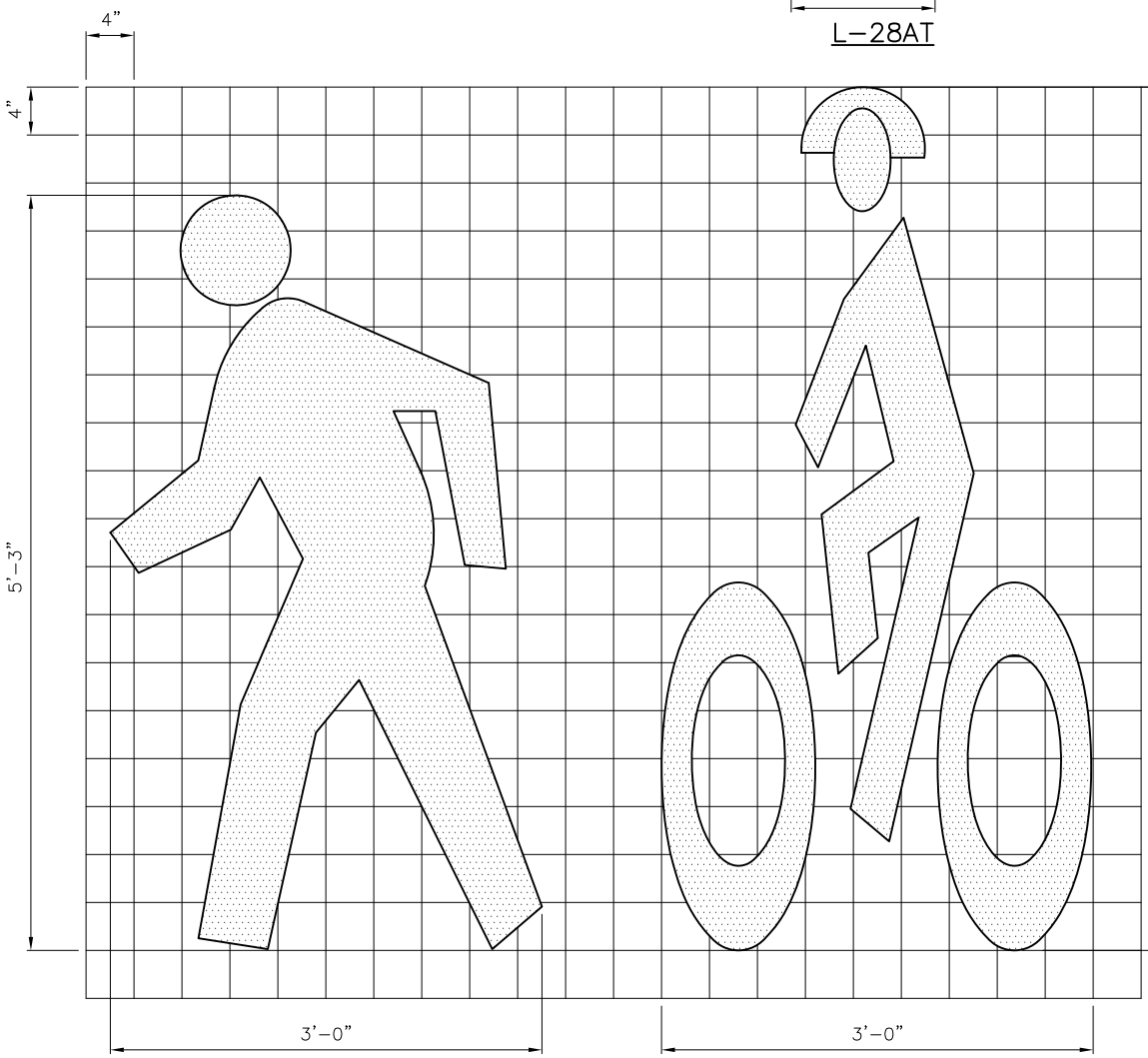

L-27T
PEDESTRIAN STYLE

L-28T
BICYCLIST SYMBOL
(INCLUDES L-28A, LT-28AT)
(SEE NOTE 2)

REF STD SPEC SEC 8-22

City of Seattle	NOT TO SCALE	BICYCLIST & PEDESTRIAN SYMBOLS