REV DATE: AUG 2013

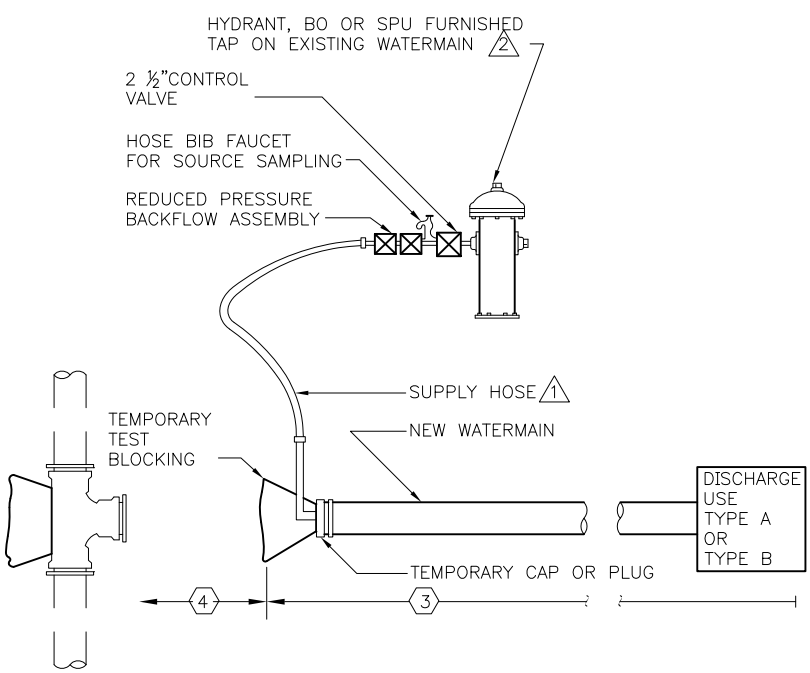

DETAIL 1

TEMPORARY FLUSHING/TESTING CONN

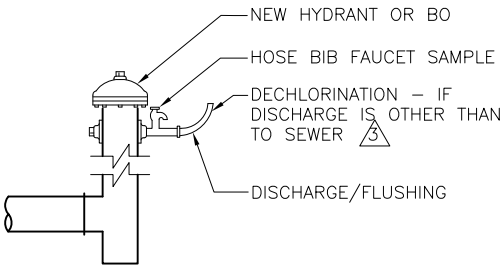

TYPE A

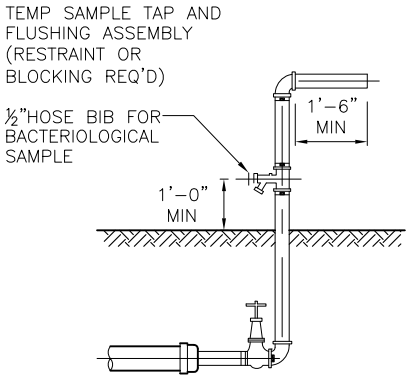

TYPE B

note 5 added

NOTES:

1. ALL FITTINGS SHALL BE DUCTILE IRON
2. ALL EXCAVATION SHALL PROVIDE A MINIMUM OF 1'–0"CLEAR AROUND PIPE AND FITTINGS.
3. THESE PLANS ARE FOR DIP AND CIP WATERMAINS 12"OR SMALLER DIA OTHER SIZES AND TYPES SEE PROJECT DRAWINGS
4. REDUCED PRESSURE BACKFLOW ASSEMBLY (RPBA) SHALL BE INSTALLED AS A UNIT (TWO SHUT–OFF VALVES, RELIEF PORT, TWO CHECK VALVES AND FOUR TEST COCKS). WHEN RPBA IS CONNECTED TO HYDRANT AND THE HOSE BIB FAUCET SAMPLE THEY SHALL BE CAPPED WHEN NOT IN USE. ASSEMBLY SHALL BE TESTED WHEN INSTALLED BY A WASHINGTON STATE CERTIFIED BACKFLOW ASSEMBLY TESTER (BAT) AND A CURRENT TEST REPORT SHALL BE ON SITE. FOR INSTALLATION PROCEDURES CALL 684–3536.
5. ALL FITTINGS AND MATERIALS FURNISHED BY CONTRACTOR AND TO BE INSTALLED BY SPU SHALL BE VERIFIED, INSPECTED AND ON THE JOB SITE PRIOR TO SHUTDOWN OF EXISTING MAIN. FAILURE TO MEET THIS REQUIREMENT COULD RESULT IN DELAYS.

LEGEND

1. CLEAN & DISINFECTED POTABLE WATER HOSE ONLY. SIZE FLUSHING RISER PER TABLE IN STD SPEC SEC 7–11.3(12)
2. HYDRANT PERMIT REQUIRED
3. ~~CHECK WITH SEWER UTILITY BEFORE DISCHARGE TO SEWERS~~

note revised

1. CONTRACTOR TO DETERMINE ALIGNMENT, GRADE AND OUTSIDE DIAMETER OF EXISTING PIPE PRIOR TO INSTALLING NEW WATERMAIN. ENGINEER TO DETERMINE OUTSIDE DIAMETER OF EXISTING PIPE WHEN CONTRACTOR EXCAVATES TO DETERMINE ALIGNMENT & GRADE.
2. ALL EXCAVATION, PIPE, FITTINGS (EXCEPT AS NOTED BELOW), OTHER MATERIAL, BEDDING, BACKFILL, COMPACTION & STREET RESTORATION BY CONTRACTOR. ALL MATERIALS SHALL BE ON JOB SITE PRIOR TO SHUTDOWN OF EXISTING MAIN.
3. INSTALLED BY CONTRACTOR
4. CONNECTION PIPE: CONTRACTOR FURNISHED, INSTALLED BY SPU
5. WATERMAIN WITH PLAIN ENDS
6. MECHANICAL JOINT SLEEVE WITH SPACER CUT TO FIT GAP, FURNISHED AND INSERTED AT TIME OF CONNECTION BY SPU
7. TAPPING SLEEVE & TAPPING VALVE FURNISHED AND INSTALLED BY SPU
8. APPLIES TO PIPES 4" THROUGH 12". ALL LARGER SIZES TO BE ADDRESSED ON DRAWINGS
9. MECHANICAL JOINT SLEEVE, FURNISHED BY CONTRACTOR AND INSTALLED BY SPU, SPACERS BY SPU WHERE REQUIRED

REF STD SPEC SEC 7-11

City of Seattle	NOT TO SCALE	CONNECTIONS TO EXISTING WATERMAINS

REV DATE: JUL 2013

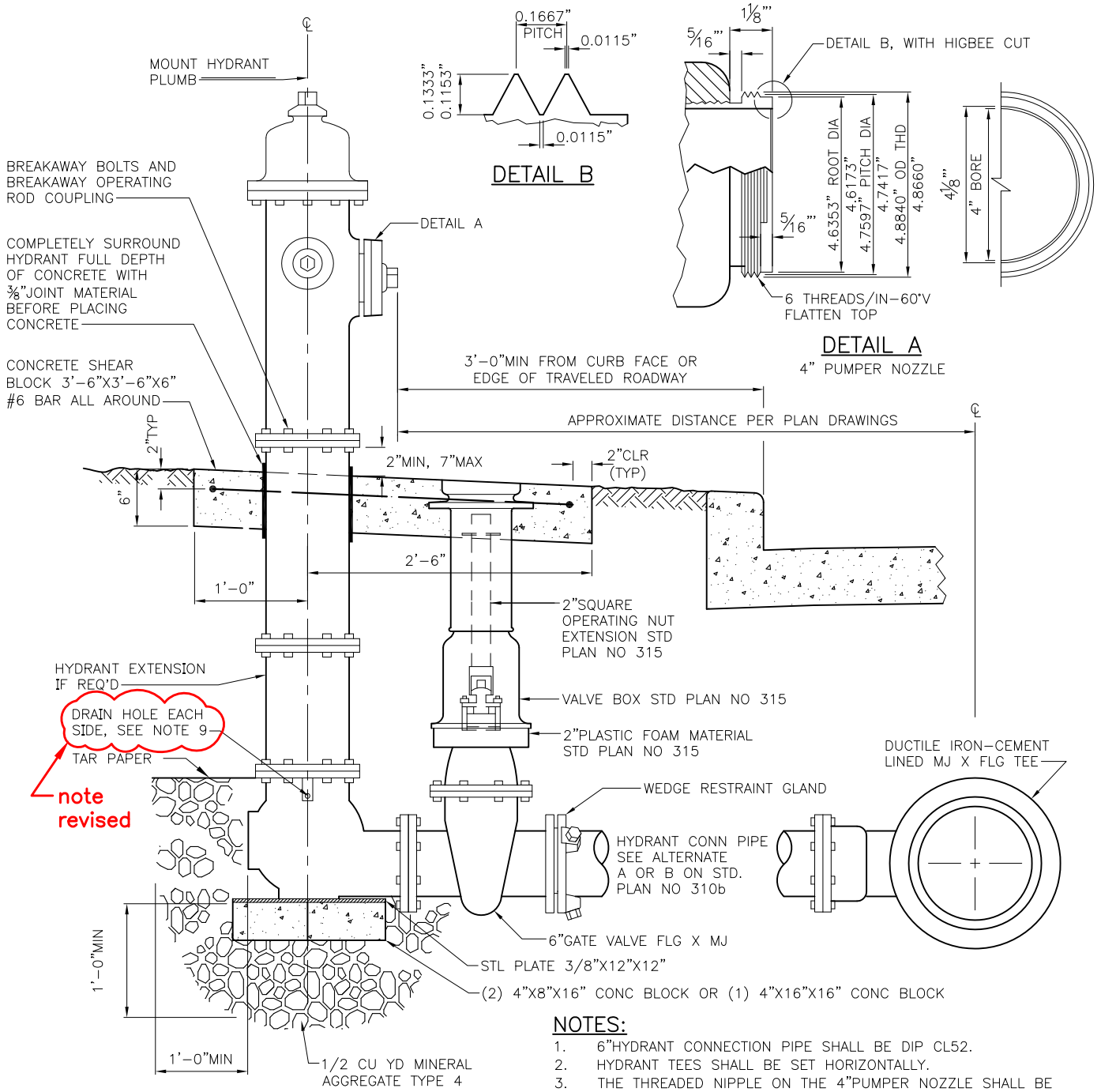

HYDRANT DETAIL

NOTES:

1. 6"HYDRANT CONNECTION PIPE SHALL BE DIP CL52.
2. HYDRANT TEES SHALL BE SET HORIZONTALLY.
3. THE THREADED NIPPLE ON THE 4"PUMPER NOZZLE SHALL BE EQUIPPED WITH THE BLUNT START OR HIGBEE CUT.
4. THE 2½"NIPPLES SHALL BE IN ACCORDANCE WITH THE NATIONAL FIRE PROTECTION ASSOCIATION BULLETIN NO 194 DATED 1974.
5. AFTER INSTALLATION, ALL SHACKLE BOLTS, NUTS, MECHANICAL JOINT GLANDS AND SHACKLE RODS SHALL BE CLEANED AND COATED WITH TWO COATS OF ROYSTON R28 MASTIC.
6. AFTER BACKFILLING, THE OUTSIDE OF THE HYDRANT (ABOVE THE GROUND LINE) SHALL BE THOROUGHLY CLEANED AND PAINTED WITH TWO COATS OF KELLY-MOORE LUXLITE 43-616 CAT YELLOW.
7. PUMPER PORT SHALL FACE CURB.
8. RESTRAINT SHALL BE BY WEDGE RESTRAINT SYSTEM SUCH AS MEGALUG OR UNIFLANGE. SEE STD SPEC 9-30.5(5).
9. CONTRACTOR SHALL REMOVE TEMPORARY PIPE PLUGS FROM THE DRAIN VALVE OUTLET BEFORE BACKFILLING THE EXCAVATION.

note added

REF STD SPEC SEC 7-14

City of Seattle	NOT TO SCALE	TYPE 310 HYDRANT SETTING DETAIL

REV DATE: JUL 2013

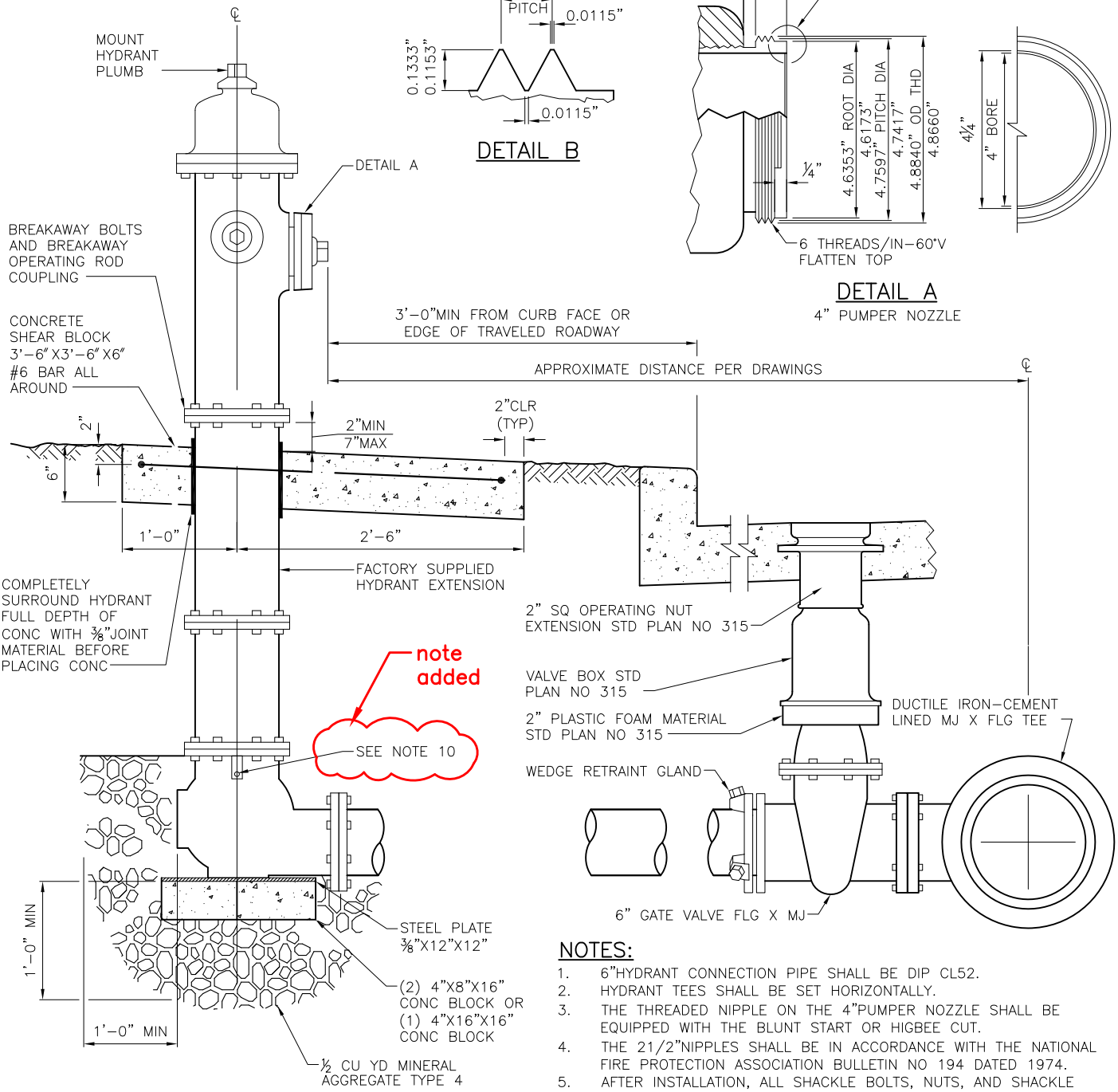

note added

NOTES:

1. 6"HYDRANT CONNECTION PIPE SHALL BE DIP CL52.
2. HYDRANT TEES SHALL BE SET HORIZONTALLY.
3. THE THREADED NIPPLE ON THE 4"PUMPER NOZZLE SHALL BE EQUIPPED WITH THE BLUNT START OR HIGBEE CUT.
4. THE 21/2"NIPPLES SHALL BE IN ACCORDANCE WITH THE NATIONAL FIRE PROTECTION ASSOCIATION BULLETIN NO 194 DATED 1974.
5. AFTER INSTALLATION, ALL SHACKLE BOLTS, NUTS, AND SHACKLE RODS SHALL BE CLEANED AND COATED WITH TWO COATS OF ASPHALT, ROYSTON ROSKOTE R28.
6. AFTER BACKFILLING, THE OUTSIDE OF THE HYDRANT (ABOVE THE GROUND LINE) SHALL BE THOROUGHLY CLEANED AND PAINTED WITH TWO COATS OF KELLY-MOORE 6130-516 CAT YELLOW.
7. PUMPER PORT SHALL FACE CURB.
8. PUMPER PORT TO BE FITTED WITH QUICK CONNECT ADAPTOR PER FIRE MARSHAL.
9. RESTRAINT SHALL BE BY WEDGE RESTRAINT SYSTEM USCH AS MEGALUG OR UNIFLANGE. SEE STD SPEC SEC 9-30.5(5).
10. CONTRACTOR SHALL REMOVE TEMPORARY PIPE PLUGS FROM THE DRAIN VALVE OUTLET BEFORE BACKFILLING THE EXCAVATION.

note added

REF STD SPEC SEC 7-14

City of Seattle	NOT TO SCALE	TYPE 311 HYDRANT SETTING DETAIL

REV DATE: AUG 2013

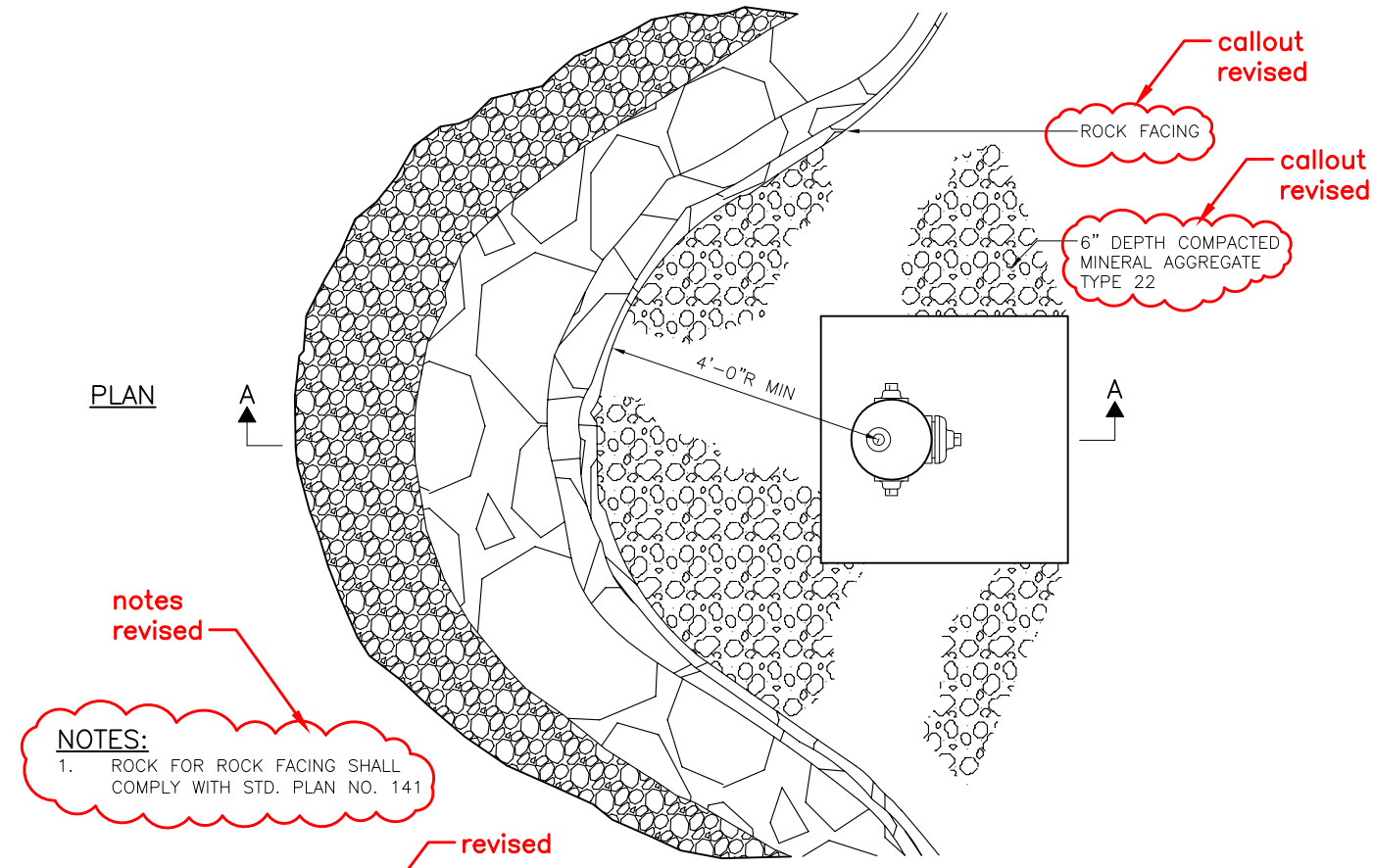

notes revised

NOTES:

1. ROCK FOR ROCK FACING SHALL COMPLY WITH STD. PLAN NO. 141

revised

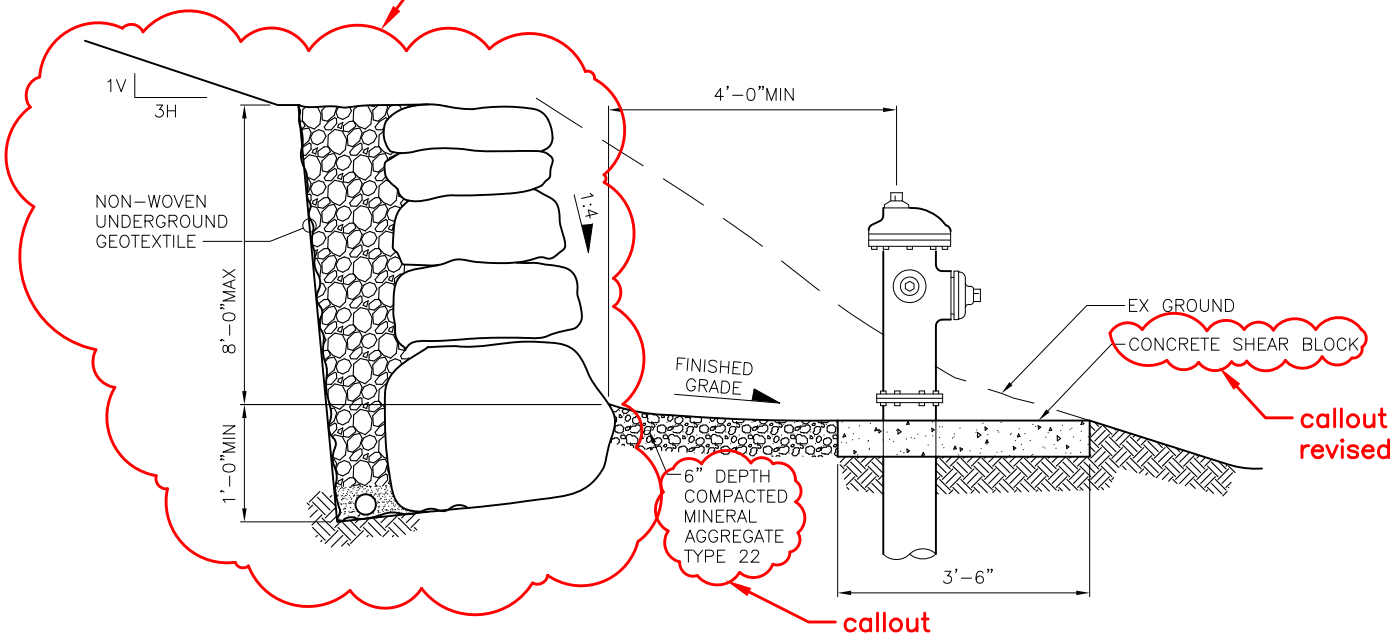

SECTION A–A

spec section revised

REF STD SPEC SEC 2-13

City of Seattle	NOT TO SCALE	WALL REQUIREMENTS FOR HYDRANTS

REV DATE: JUN 2013

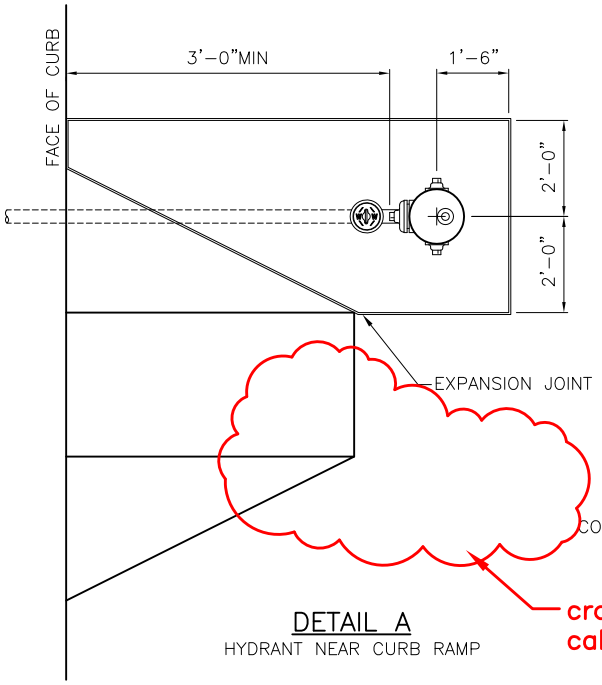

cross hatching and callout removed

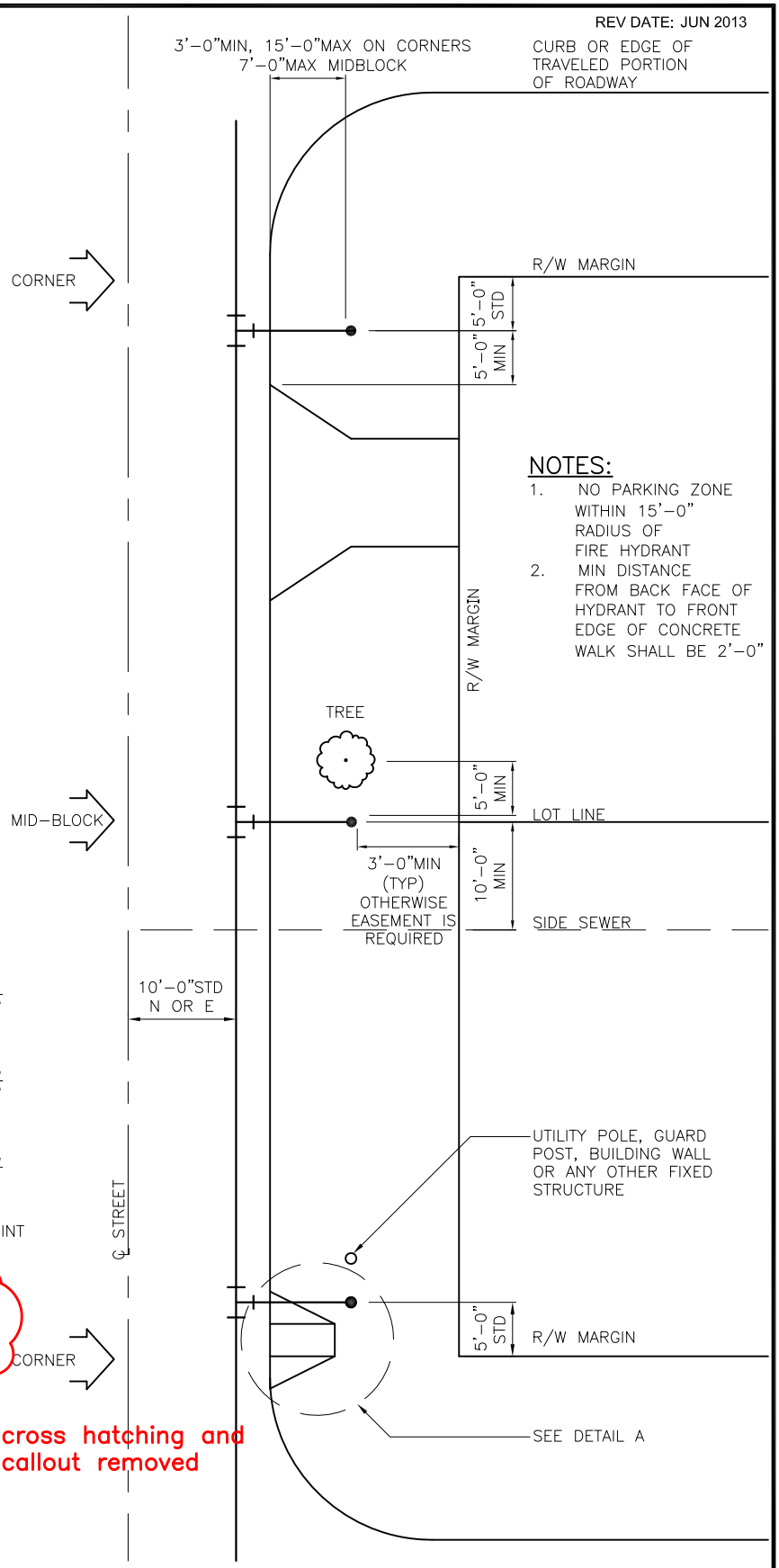

NOTES:

1. NO PARKING ZONE WITHIN 15'-0" RADIUS OF FIRE HYDRANT
2. MIN DISTANCE FROM BACK FACE OF HYDRANT TO FRONT EDGE OF CONCRETE WALK SHALL BE 2'-0"

REF STD SPEC SEC 7-14

City of Seattle	NOT TO SCALE	FIRE HYDRANT LOCATIONS & CLEARANCES

REV DATE: AUG 2013

new plan

NOTES:

1. UNION POINT 2' OUTSIDE VAULT OR 2' FROM PROPERTY LINE.
2. 5' CLEARANCE FROM NEW TREES OR CLEAR OF DRIP LINE FOR EXISTING TREES
3. 5' CLEAR FROM POLES.
4. 2' CLEAR FROM EDGE OF DRIVEWAY OR ADA RAMP.
5. WATER SERVICE NOT TO BE INSTALLED IN DRIVEWAY, BEHIND ADA RAMP, OR STREET CORNER.
6. SIDE SEWER HORIZONTAL CLEARANCE 10' FOR CAST IRON WATER PIPE OR 5' FOR DUCTILE IRON WATER PIPE.
7. SIDE SEWER VERTICAL CLEARANCE 1.5' MIN.
8. VAULT HORIZONTAL CLEARANCE 12" MIN FROM OTHER UTILITIES. UNLESS OTHERWISE NOTED IN STD SPECS.
9. VERTICAL CLEARANCE 12" MIN FOR ALL OTHER UTILITY CROSSINGS UNLESS OTHERWISE NOTED IN STD SPECS.
10. ALLOWABLE LOCATION OF WATER SERVICE VAULT. 2' CLEAR OF CURB AND 2' CLEAR OF PROPERTY LINE.

TYPES OF WATER SERVICES

6" & LARGER DOMESTIC SERVICE (DS) 6'X9' VAULT NCVP#

3" & 4" DOMESTIC SERVICE (DS) 5'X7' VAULT NCVP#

4" & LARGER FIRE SERVICES (DC DETECTOR CHECK) 4'X4' AREA (TYP DIRECT BURY) NCVP#

2" & SMALLER WATER SERVICE INSTALLED IN 1.5'X2' METER BOX MB#

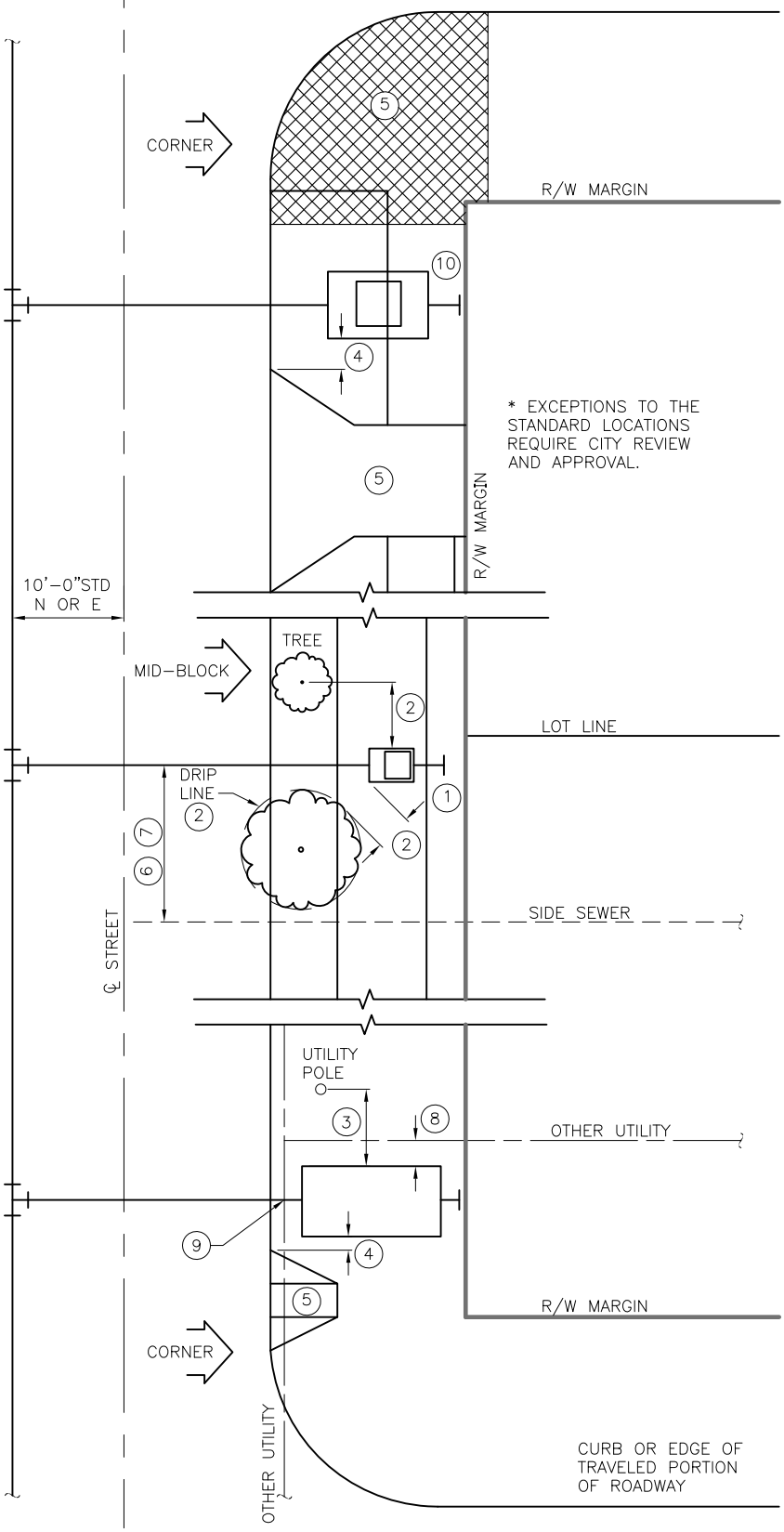

REF STD SPEC SEC 1-07.17(2)

City of Seattle | NOT TO SCALE | WATER SERVICE VAULT LOCATION CLEARANCES

REV DATE: SEPT 2013

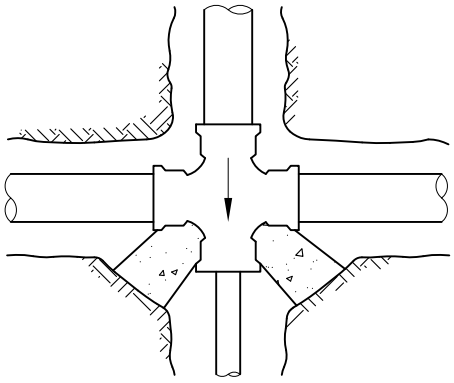

UNBALANCED CROSS

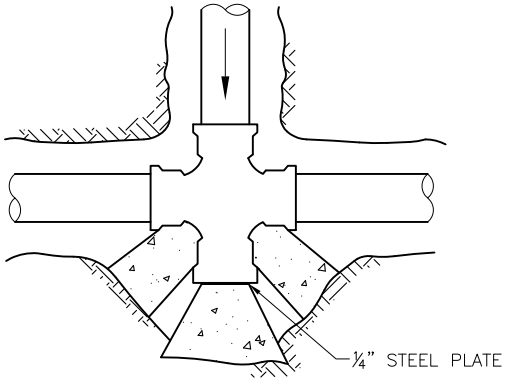

CROSS WITH PLUG

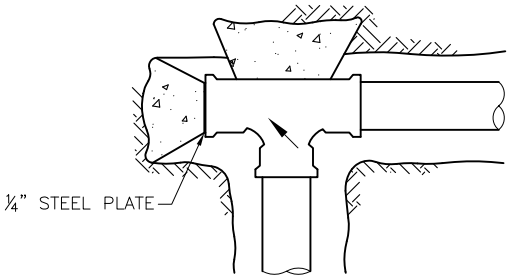

PLUGGED TEE

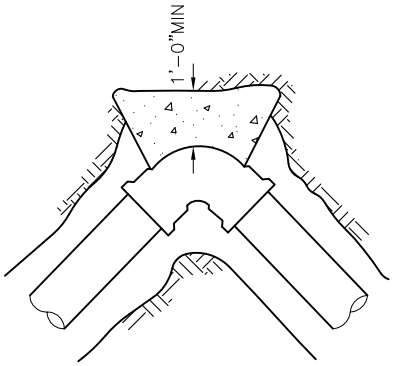

HORIZONTAL BEND

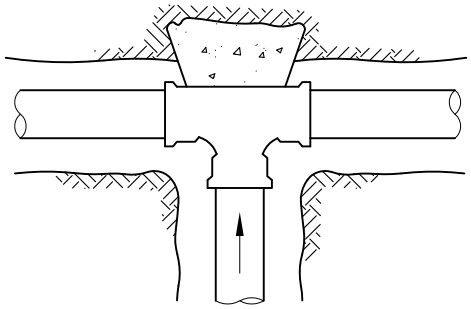

TEE

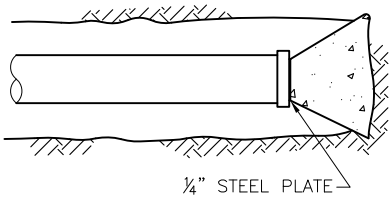

PIPE & CAP

THRUST BLOCK AREA IN SQUARE FEET (SEE STD PLAN NO 331B)

SOIL	FIRM SILT OR FIRM SILTY SAND				COMPACT SAND				COMPACT SAND & GRAVEL			
FITTING	90° BEND	TEE	45° BEND CAP OR PLUG	11¼° & 22½° BEND	90° BEND	TEE	45° BEND CAP OR PLUG	11¼° & 22½° BEND	90° BEND	TEE	45° BEND CAP OR PLUG	11¼° & 22½° BEND
PIPE SIZE 4"	7.0	4.2	4.2	1.7	2.9	2.1	2.1	1.0	2.2	1.6	1.6	1.0
6"	13.3	9.4	9.4	3.8	6.7	4.7	4.7	1.9	5.0	3.5	3.5	1.4
8"	23.3	16.7	16.7	6.7	11.7	8.4	8.4	3.4	8.8	6.3	6.3	2.5
12"	53.0	37.5	37.5	15.0	26.5	18.8	18.8	7.5	20.0	14.0	14.0	5.6

AREAS CALCULATED ON 300 PSI TEST PRESSURE AND 3'-0" MIN COVER OVER WATERMAIN

ECOLOGY BLOCKS, PER STD PLAN NO 460, MAY BE USED, AT THE DISCRETION OF THE ENGINEER ONLY, IN LIEU OF POURED-IN-PLACE BLOCKING FOR FITTINGS IN HEAVY OUTLINED PORTION OF TABLE.

note revised

REF STD SPEC SEC 7-11

City of Seattle

NOT TO SCALE

WATERMAIN THRUST BLOCKING HORIZONTAL FITTINGS

REV DATE: SEP 2013

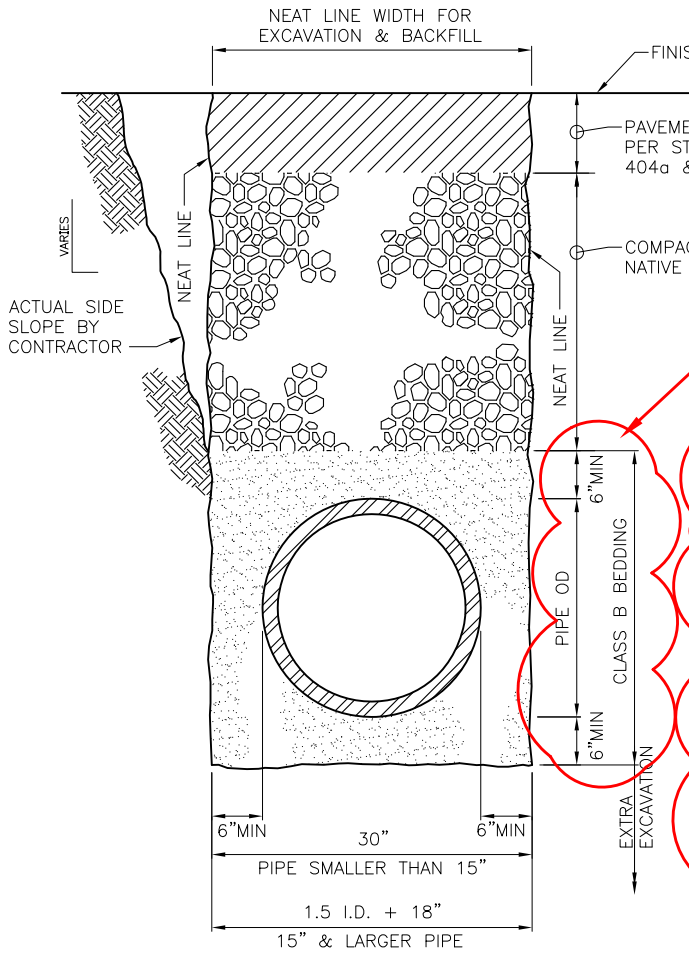

TYPICAL BEDDING

CLASS D dim removed

new detail

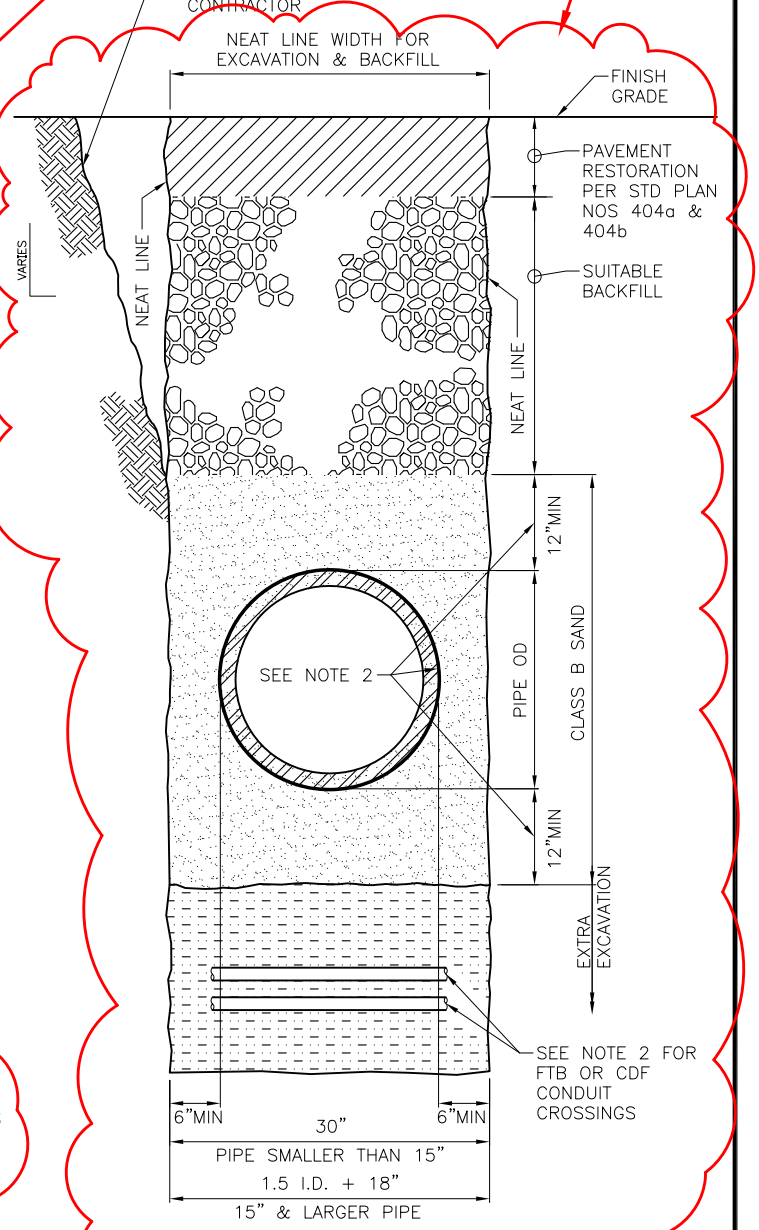

BEDDING AT TRENCH CROSSING

CLASS D removed

BEDDING MATERIAL

CLASS B:

- FOR DISTRIBUTION WATERMAIN, MINERAL AGGREGATE TYPE 6 OR TYPE 7
- FOR TRANSMISSION WATERMAIN, MINERAL AGGREGATE TYPE 9
- SPECIAL BEDDING TO BE INDICATED ON DRAWINGS

NOTES:

1. EXCAVATE FOR THE BELL TO ENSURE UNIFORM SUPPORT FOR THE PIPE BARREL
2. FOR FLUIDIZED THERMAL BACKFILL (FTB) OR CDF CROSSINGS OF METALLIC PIPE, INCREASE CLASS B SAND DEPTH & COVER TO 12" MIN & ENCASE METALLIC PIPE IN 8 MIL POLYETHYLENE ENCASEMENT FOR FULL TRENCH WIDTH

notes revised

REF STD SPEC SEC 7-11,7-17

City of Seattle	NOT TO SCALE	WATERMAIN TRENCH AND BEDDING

REV DATE: JUN 2013

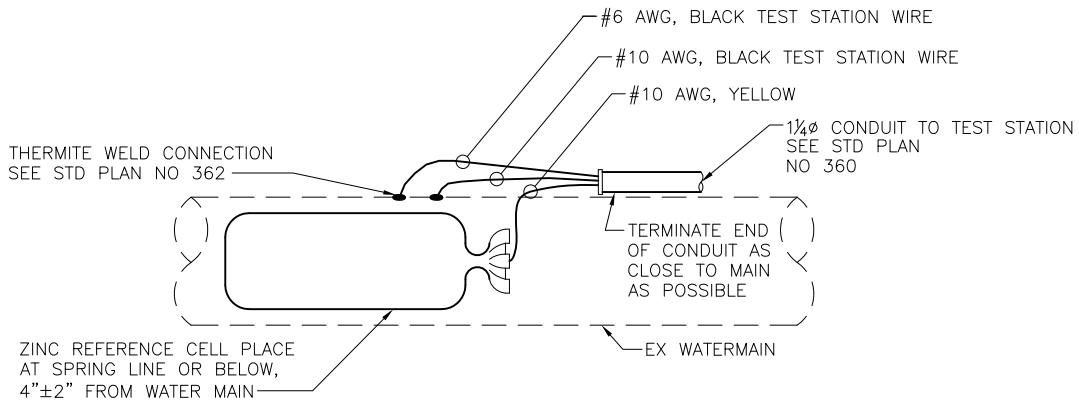

STANDARD 3–WIRE TEST STATION

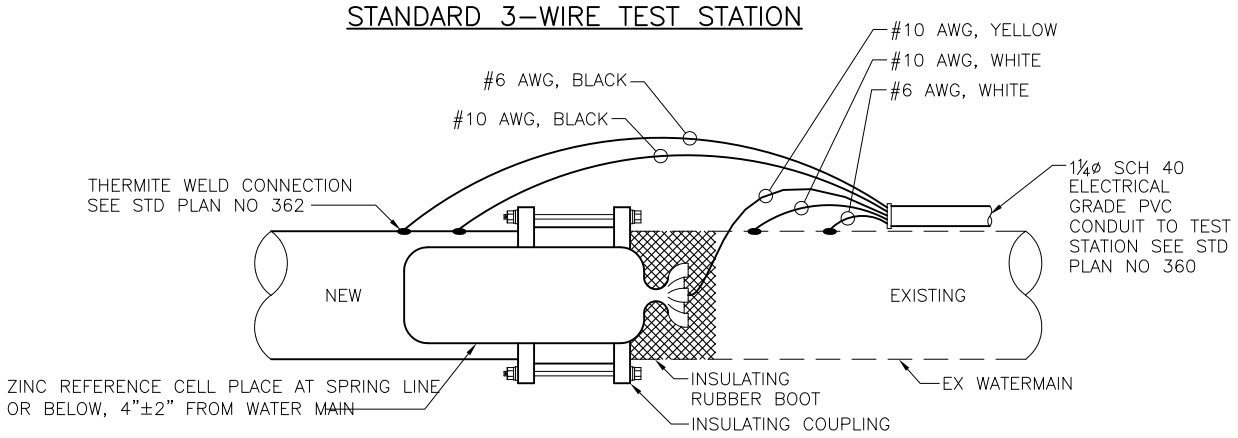

INSULATING COUPLING 5–WIRE TEST STATION

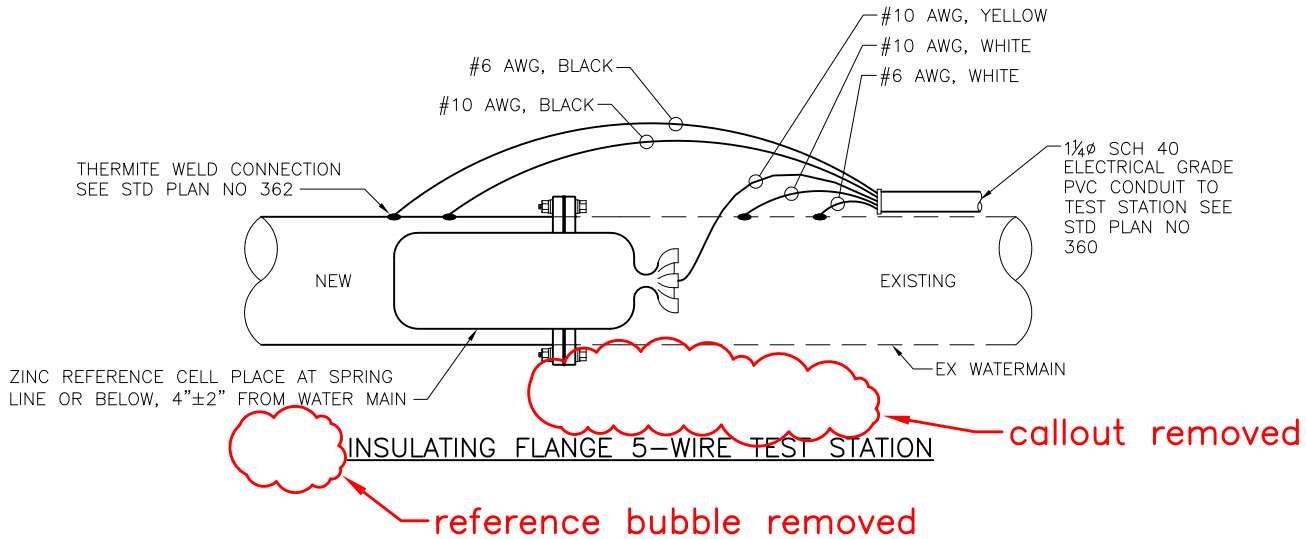

INSULATING FLANGE 5–WIRE TEST STATION

NOTE:

WIRE INSTALLATION PER STD SPEC SEC 9–30.12(3)

REF STD SPEC SEC 7-11.3(15) & 9-30.12

City of Seattle	NOT TO SCALE	ELECTROLYSIS TEST STATION WIRE INSTALLATION DETAILS