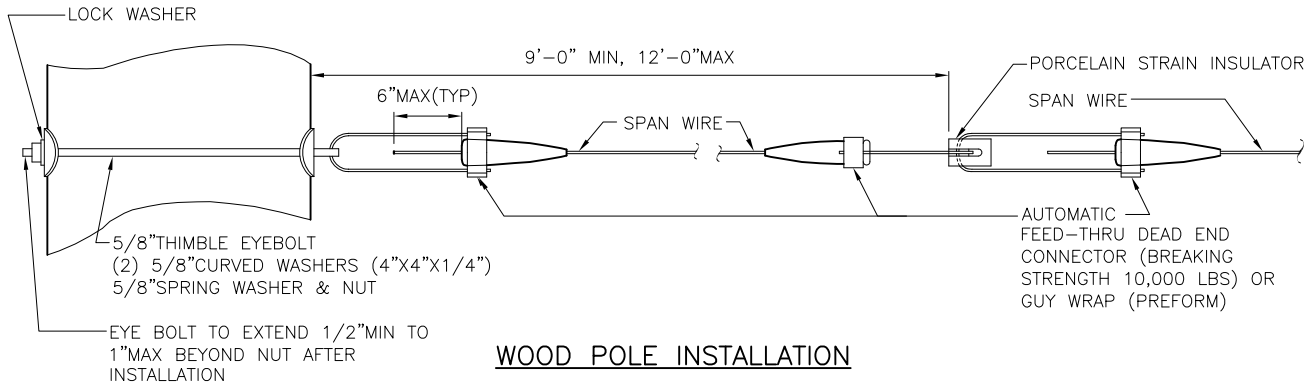

WOOD POLE INSTALLATION

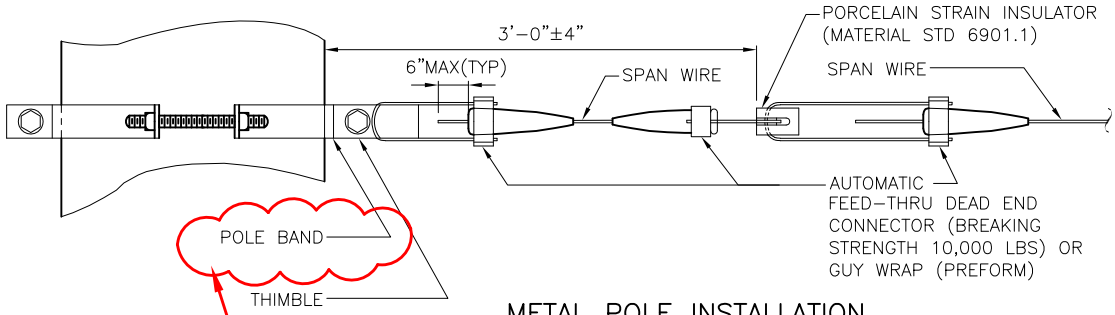

METAL POLE INSTALLATION

reference to std plan 569 removed

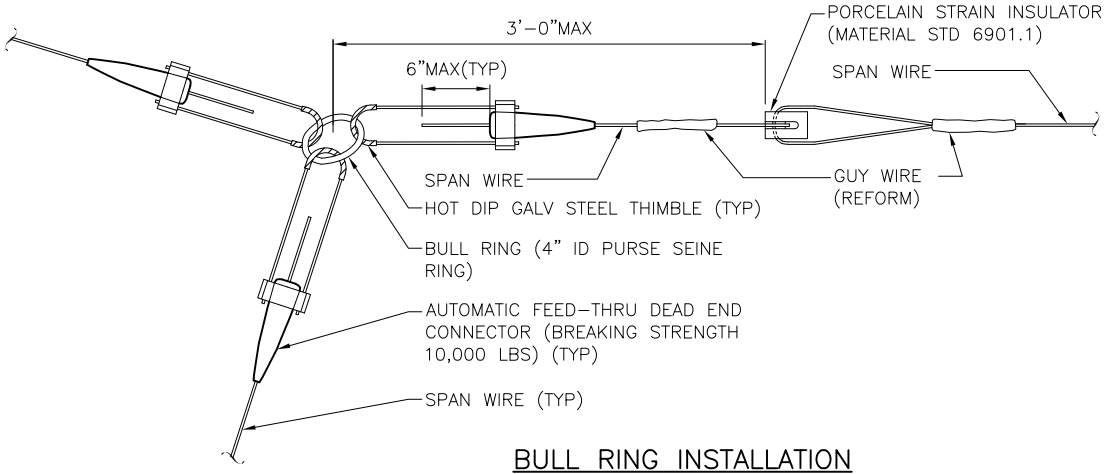

BULL RING INSTALLATION

NOTES:

1. ALL STEEL HARDWARE TO BE HOT DIP GALVANIZED OR STAINLESS STEEL UNLESS OTHERWISE STIPULATED IN THE DRAWINGS.
2. SPAN WIRE SHALL BE ALUMINUM COATED STEEL.
3. SPREAD THIMBLE TO FIT THE BAIL OF THE AUTOMATIC DEAD END.

REF STD SPEC SEC 8-21 & SCL MATERIAL STANDARD 6901.1

City of Seattle	NOT TO SCALE	SPAN WIRE INSTALLATION

REV DATE: FEB 2014

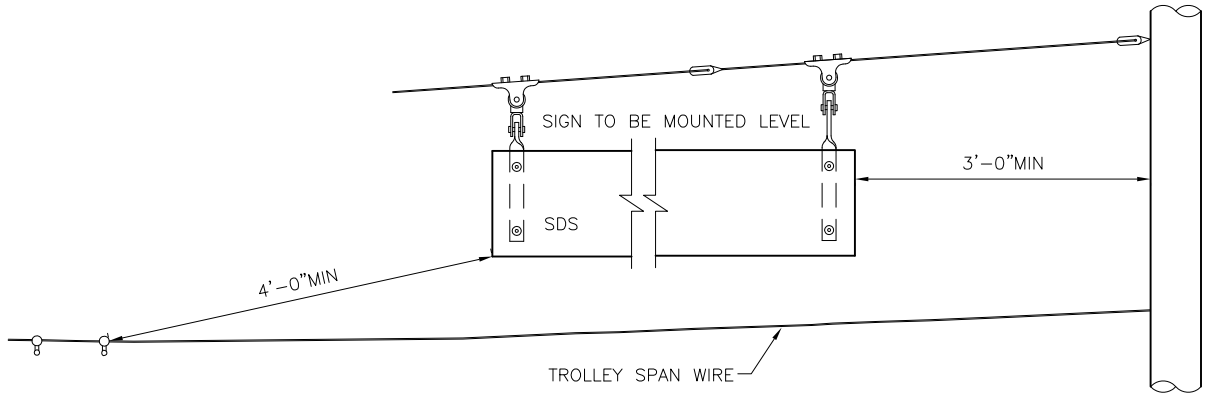

STREET DESIGNATION SIGN

title revised

twisted steel extension link and tongue clevis details removed

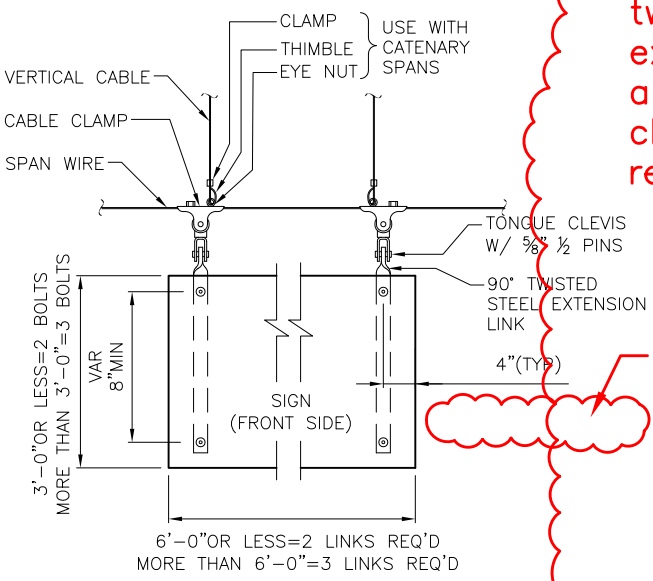

callout removed

SPAN WIRE MOUNTED SIGN

title revised

NOTES:

1. ALL HARDWARE SHALL BE STAINLESS STEEL. OTHER THAN HARDWARE SHALL BE HOT DIP GALVANIZED.
2. NEOPRENE GASKETS SHALL NOT BE USED FOR SPAN WIRE OR AERIAL CONNECTIONS.

title revised

REF STD SPEC SEC 8-21

City of Seattle	NOT TO SCALE	OVERHEAD SIGNS SPANWIRE MOUNTED

REV DATE: SEPT 2013

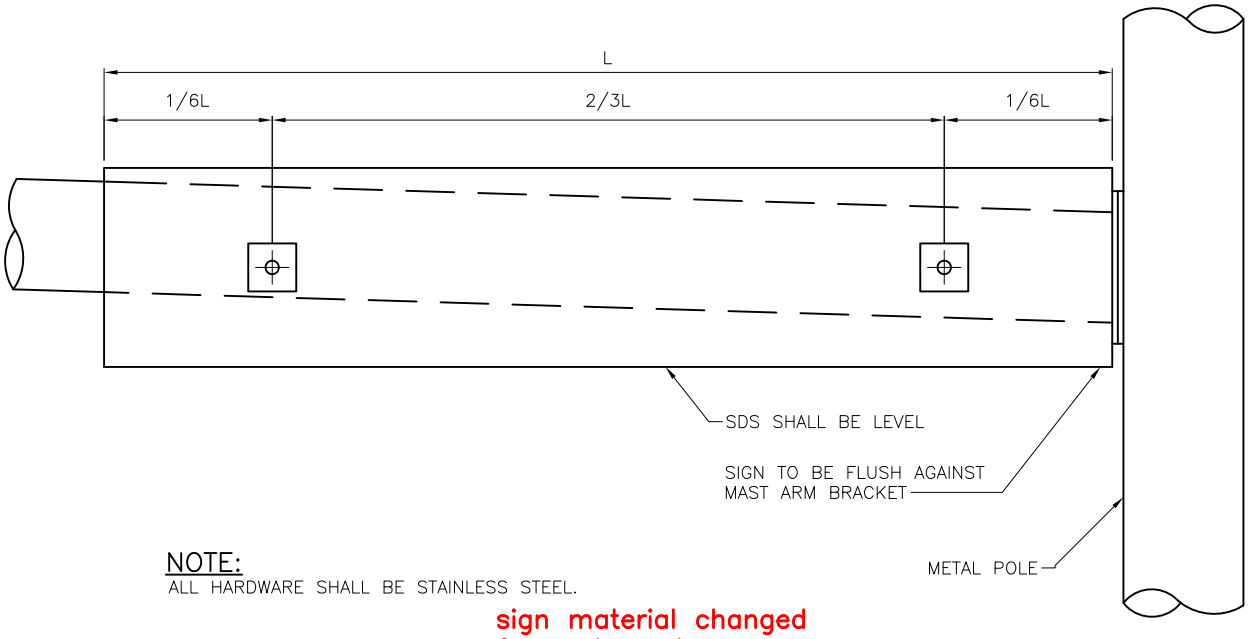

NOTE:
ALL HARDWARE SHALL BE STAINLESS STEEL.

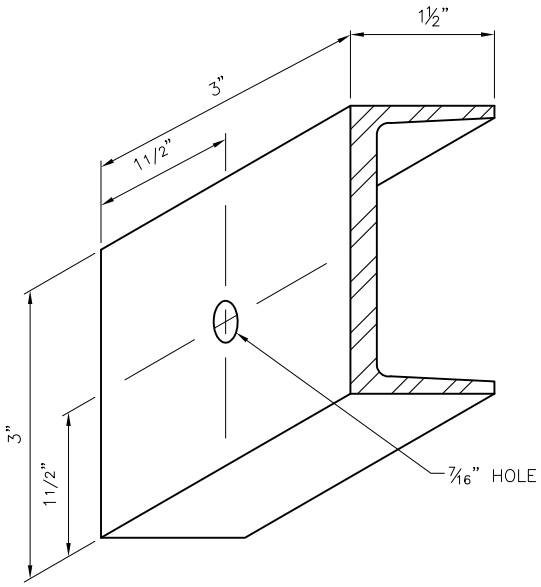

C3X2.1

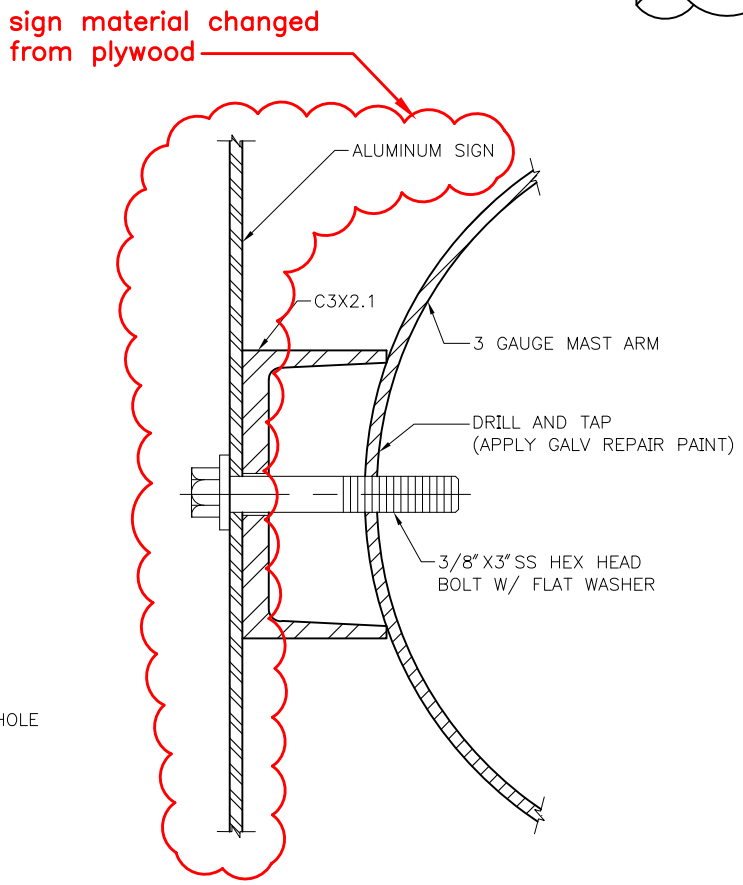

REF STD SPEC SEC 8-21

City of Seattle	NOT TO SCALE	SDS BRACKET FOR STEEL MAST ARM POLES

REV DATE: MAR 2013

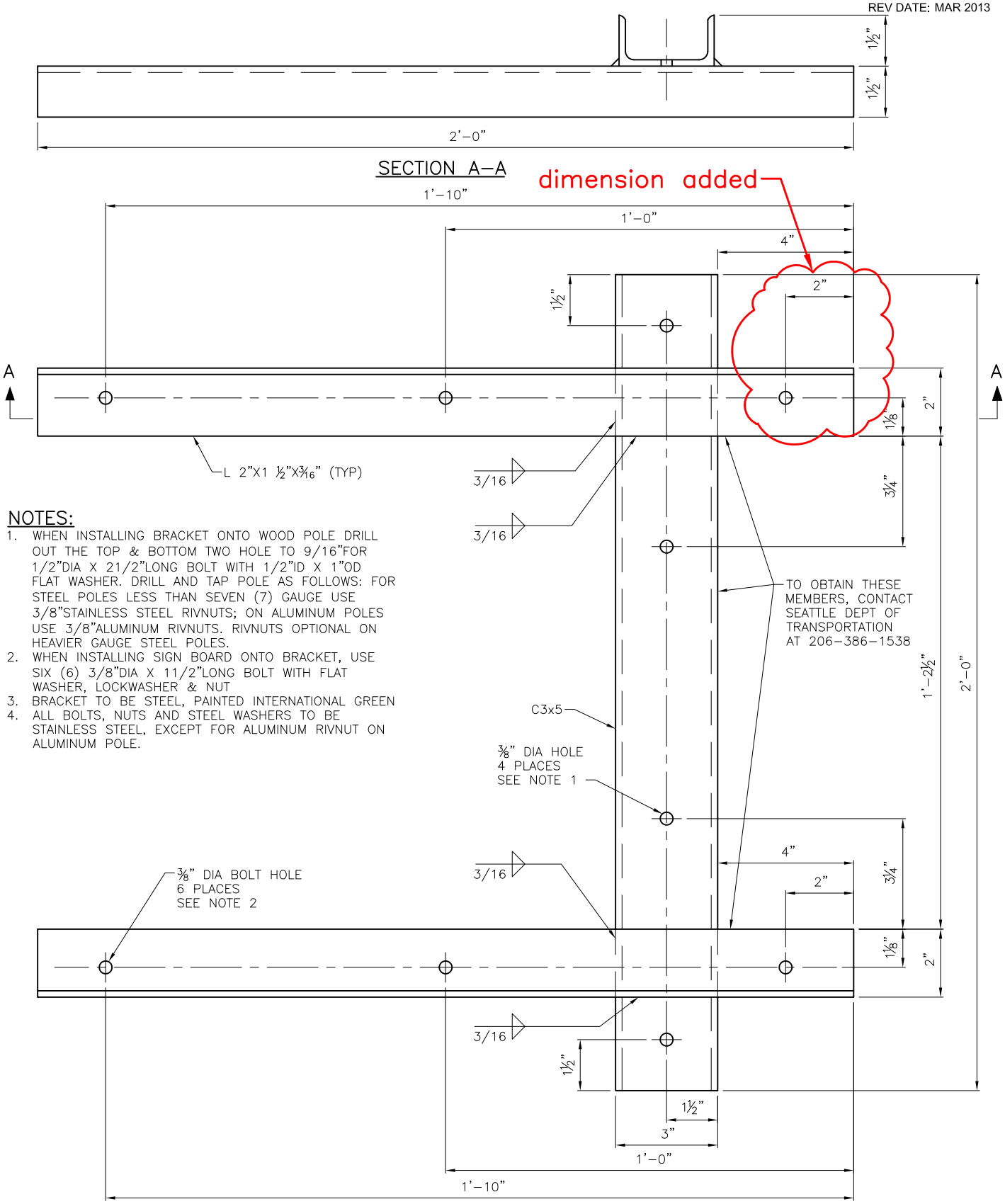

NOTES:

1. WHEN INSTALLING BRACKET ONTO WOOD POLE DRILL OUT THE TOP & BOTTOM TWO HOLE TO 9/16"FOR 1/2"DIA X 21/2"LONG BOLT WITH 1/2"ID X 1"OD FLAT WASHER. DRILL AND TAP POLE AS FOLLOWS: FOR STEEL POLES LESS THAN SEVEN (7) GAUGE USE 3/8"STAINLESS STEEL RIVNUTS; ON ALUMINUM POLES USE 3/8"ALUMINUM RIVNUTS. RIVNUTS OPTIONAL ON HEAVIER GAUGE STEEL POLES.
2. WHEN INSTALLING SIGN BOARD ONTO BRACKET, USE SIX (6) 3/8"DIA X 11/2"LONG BOLT WITH FLAT WASHER, LOCKWASHER & NUT
3. BRACKET TO BE STEEL, PAINTED INTERNATIONAL GREEN
4. ALL BOLTS, NUTS AND STEEL WASHERS TO BE STAINLESS STEEL, EXCEPT FOR ALUMINUM RIVNUT ON ALUMINUM POLE.

REF STD SPEC SEC 8-21

City of Seattle	NOT TO SCALE	SDS BRACKET FOR STEEL OR WOOD POLES

REV DATE: AUG 2013

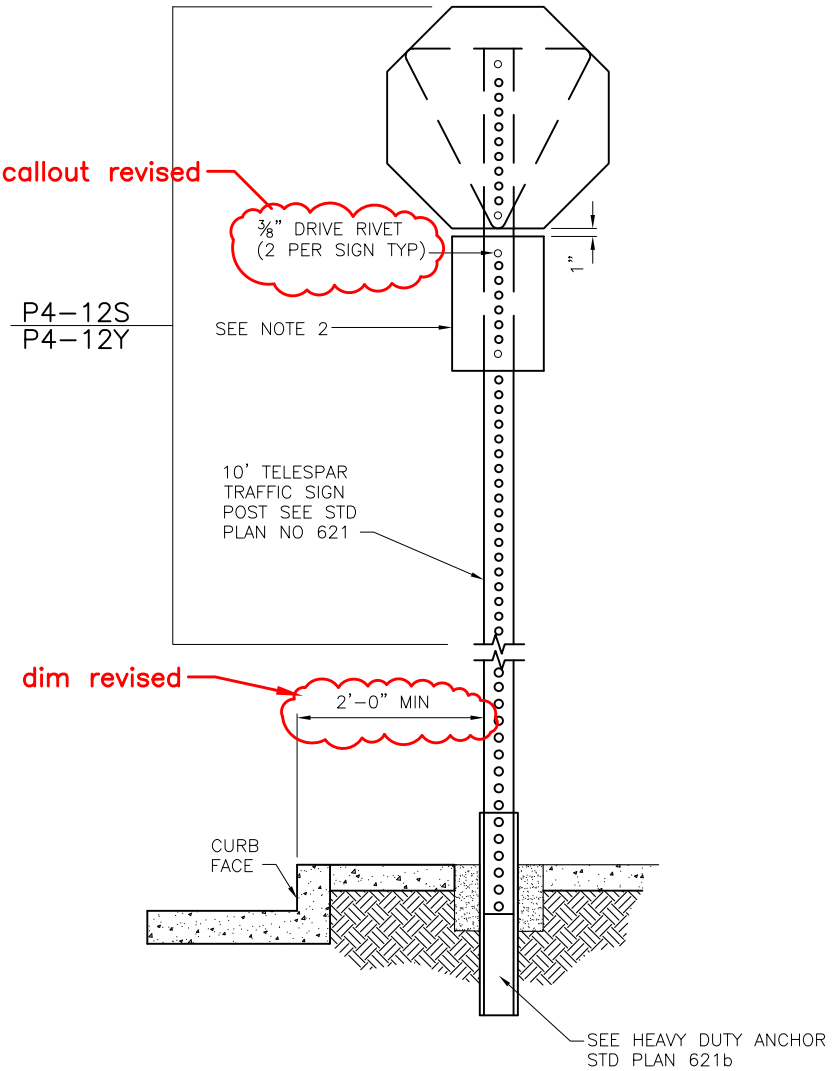

POST ANCHOR INSTALLATIONS

NOTE:
CONTACT SEATTLE DEPARTMENT OF TRANSPORTATION (684-5087) FOR DETAILS REGARDING SIGN MESSAGE AND FOUNDATION.

notes revised

REF STD SPEC SEC 8-21

City of Seattle	NOT TO SCALE	STOP AND YIELD SIGN POST AND ANCHOR INSTALLATION

REV DATE: AUG 2013

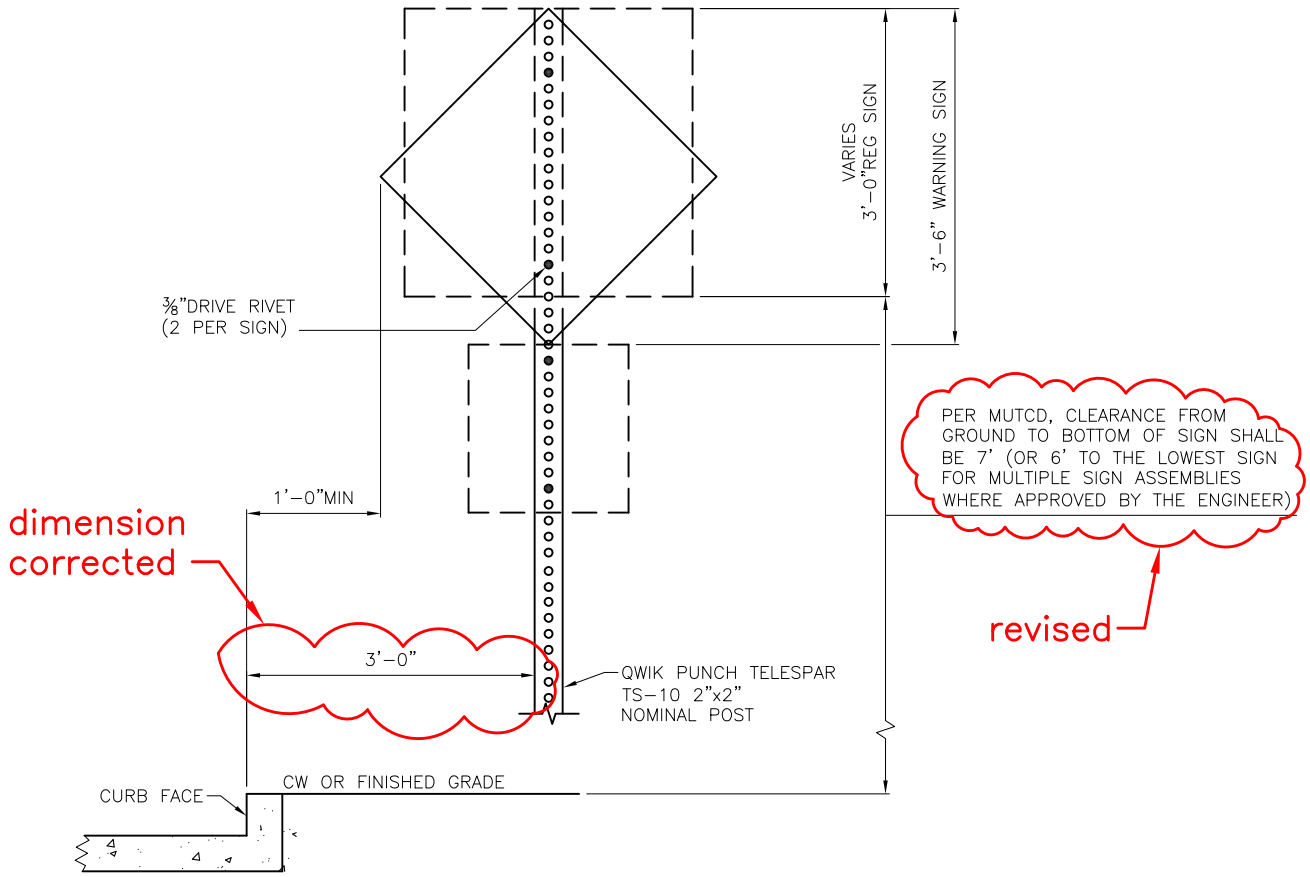

TS-10

(SEE STD PLAN 621b FOR POST ANCHOR DETAILS)

NOTES:

1. SIGN SHALL BE ATTACHED WITH TOP EDGE OF SIGN FLUSH WITH TOP OF SQUARE SECTION OF POST.
2. TS-5 ASSEMBLIES SHALL BE USED ONLY WITH APPROVAL OF ENGINEER, IN AREAS NOT SUBJECT TO PEDESTRIAN TRAVEL.

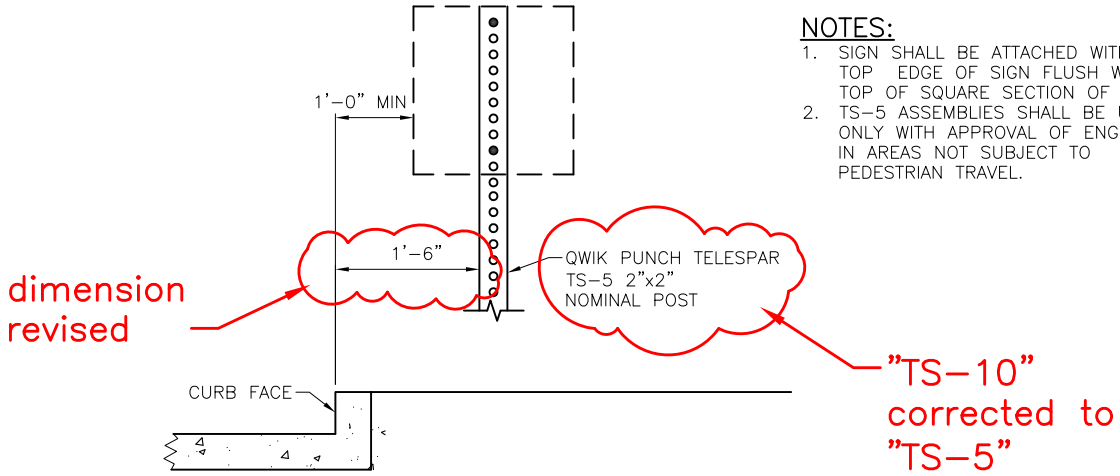

TS-5

(SEE STD PLAN 621b FOR POST ANCHOR DETAILS)

REF STD SPEC SEC 8-21

City of Seattle	NOT TO SCALE	WARNING AND REGULATORY SIGN POST

REV DATE: FEB 2014

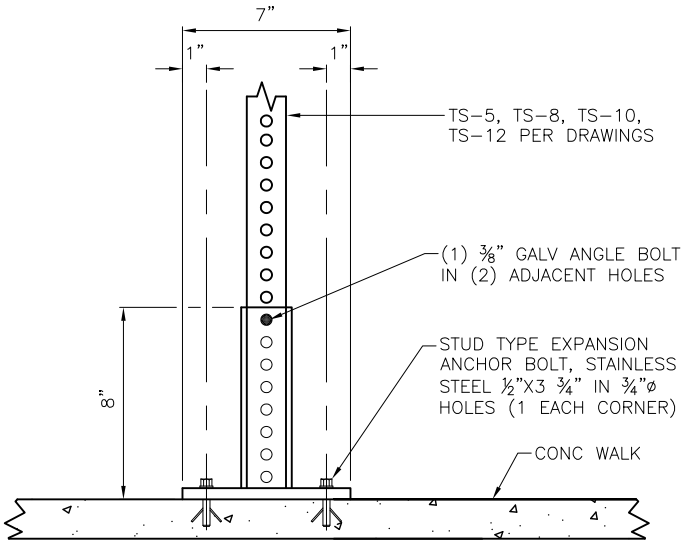

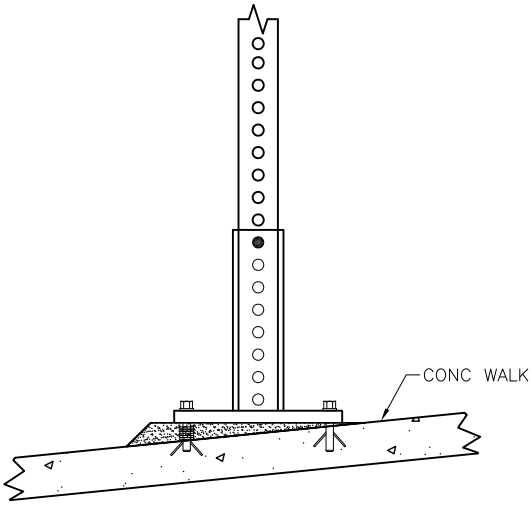

SURFACE MOUNT

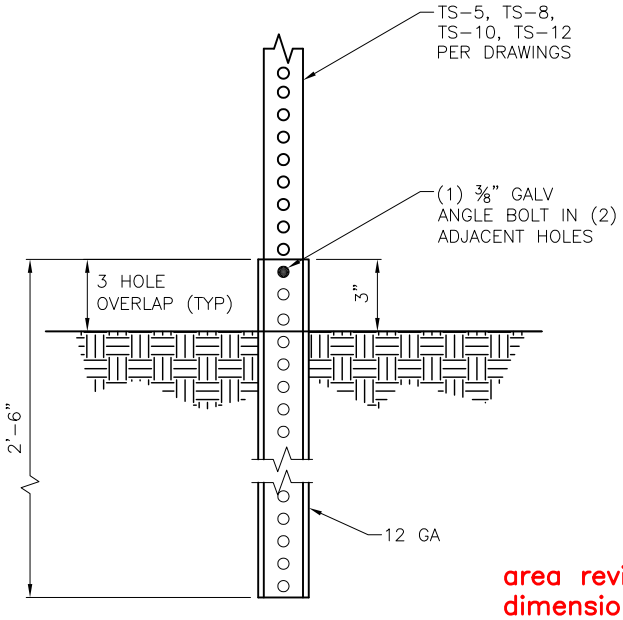

LIGHT DUTY ANCHOR

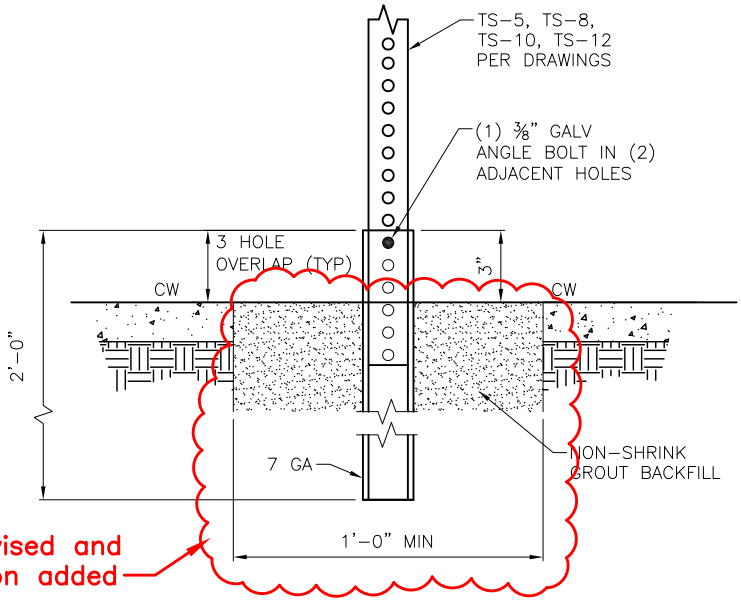

area revised and dimension added

HEAVY DUTY ANCHOR

NOTES:

1. FOR UNLEVEL SIDEWALKS INSERT WASHERS AS SPACERS BETWEEN PLATE AND SIDEWALK. GROUT ALL SPACE AS SHOWN. IF BOLT CANNOT PENETRATE SIDEWALK AT LEAST 2", CONTACT THE ENGINEER.
2. USE CONCRETE FOOTINGS FOR ALL SIGNS LARGER THAN 96 SQUARE INCHES.

notes revised

REF STD SPEC SEC 8-21

City of Seattle	NOT TO SCALE	WARNING AND REGULATORY SIGN POST ANCHOR INSTALLATIONS

REV DATE: AUG 2013

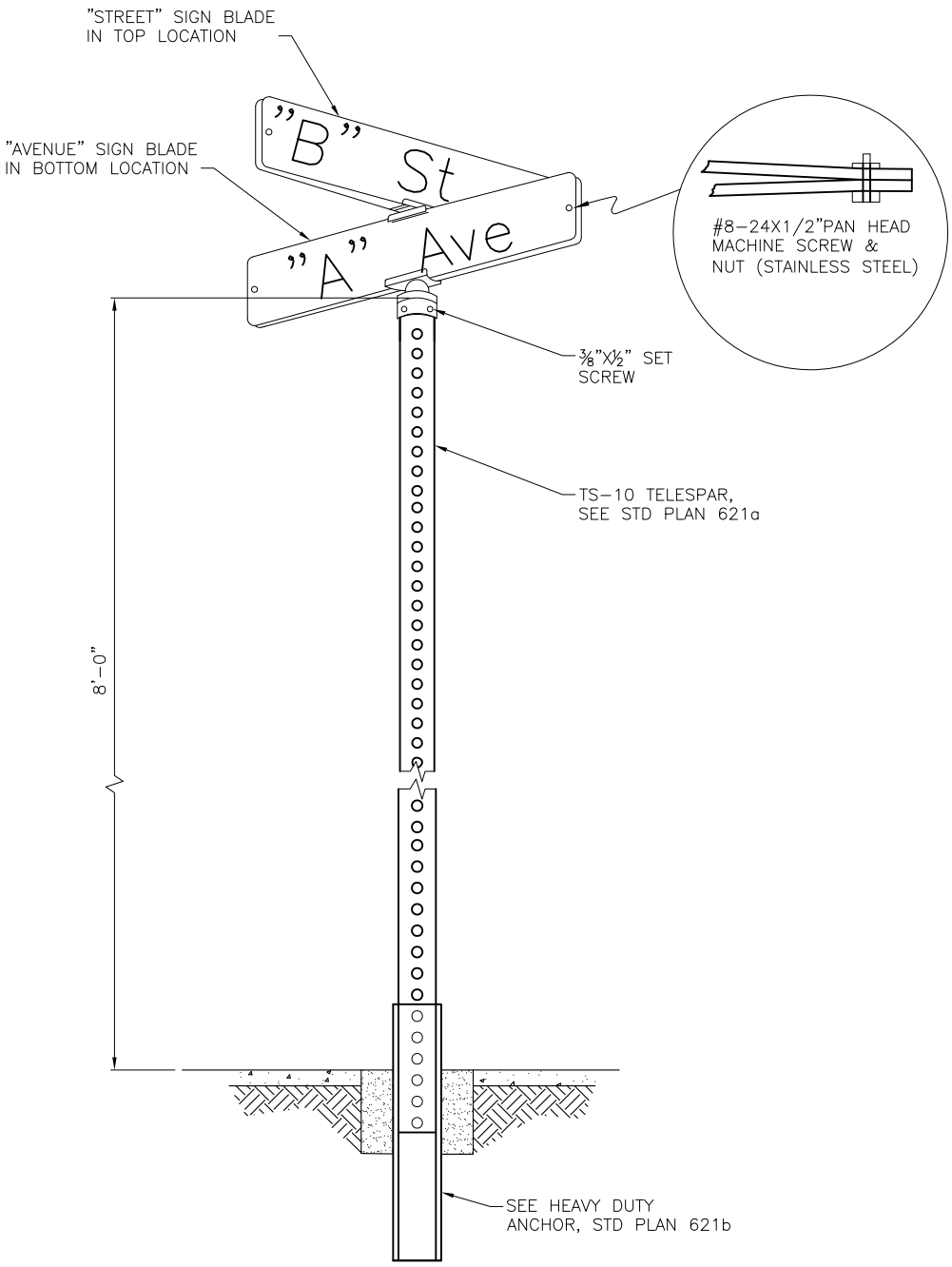

NOTES:

1. SNS BLADE SHALL BE INSTALLED PARALLEL TO CORRESPONDING STREET
2. INSTALLATION OF SNS ON ANY OTHER METAL POLE SHALL REQUIRE REVIEW AND APPROVAL BY THE ENGINEER
3. SNS/SP RELOCATION: OLD CONCRETE SHALL BE REMOVED AND NEW CONCRETE BASE SHALL BE CONSTRUCTED
4. CITY OF SEATTLE SHALL FABRICATE SNS BLADES AND SUPPLY MOUNTING HARDWARE AT PROJECT OR CONTRACTOR EXPENSE

spec section added

REF STD SPEC SEC 8-21

City of Seattle	NOT TO SCALE	STREET NAME SIGN INSTALLATION

REV DATE: FEB 2014

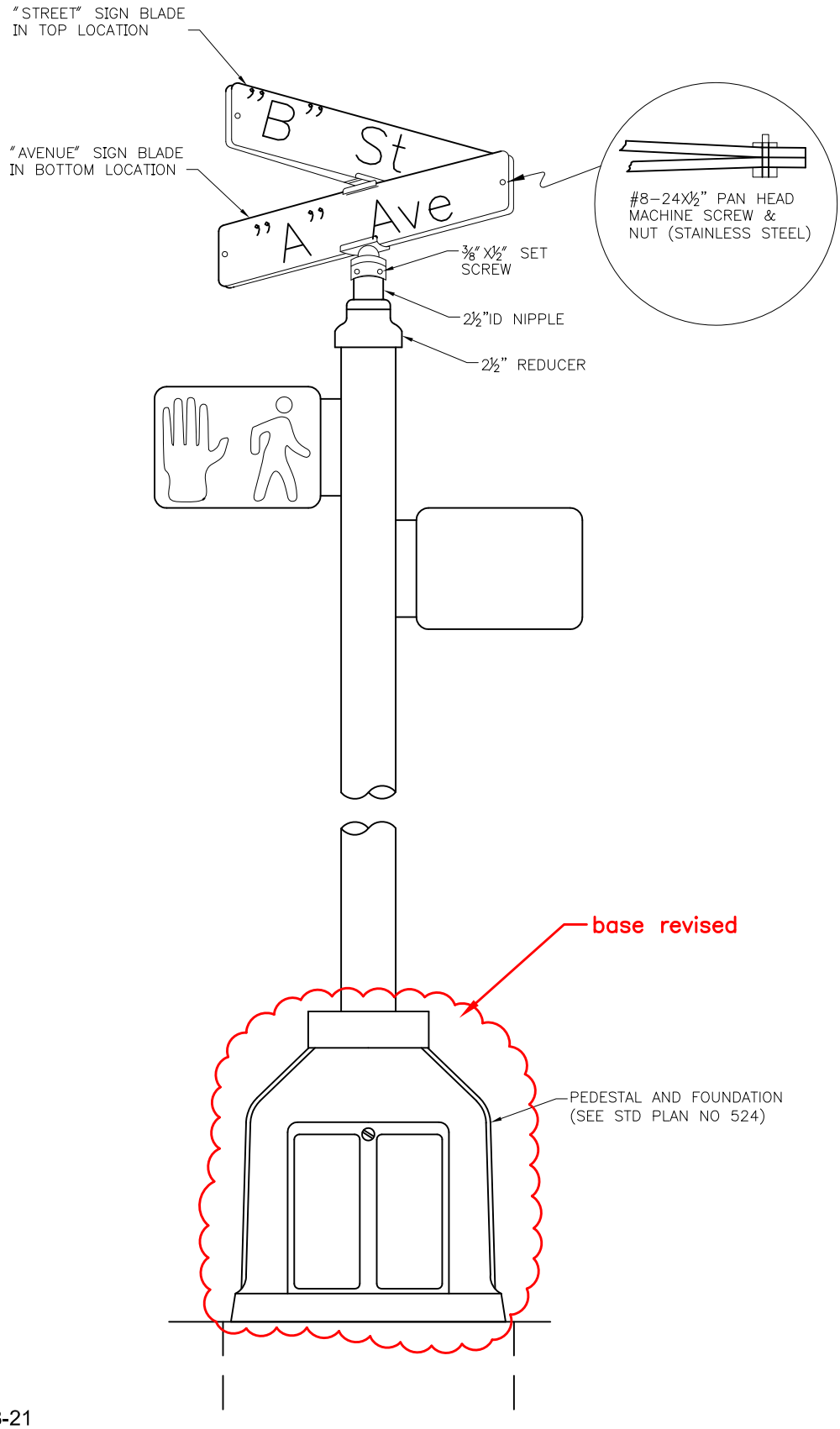

REF STD SPEC SEC 8-21

City of Seattle	NOT TO SCALE	STREET NAME SIGN PEDESTAL INSTALLATION

REV DATE: AUG 2013

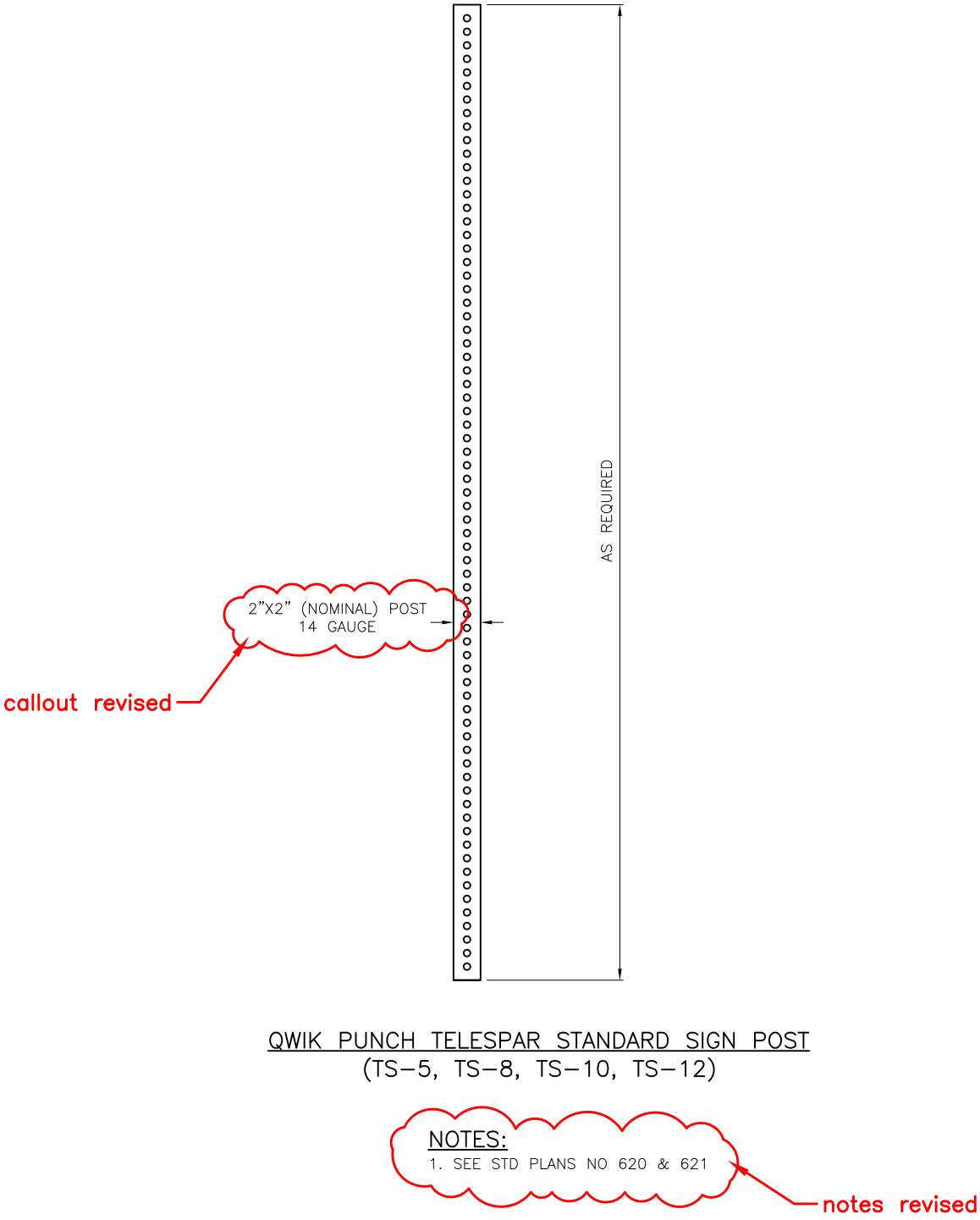

QWIK PUNCH TELESPAR STANDARD SIGN POST
(TS–5, TS–8, TS–10, TS–12)

REF STD SPEC SEC 8-21

City of Seattle	NOT TO SCALE	TRAFFIC SIGN POSTS

REV DATE: AUG 2013

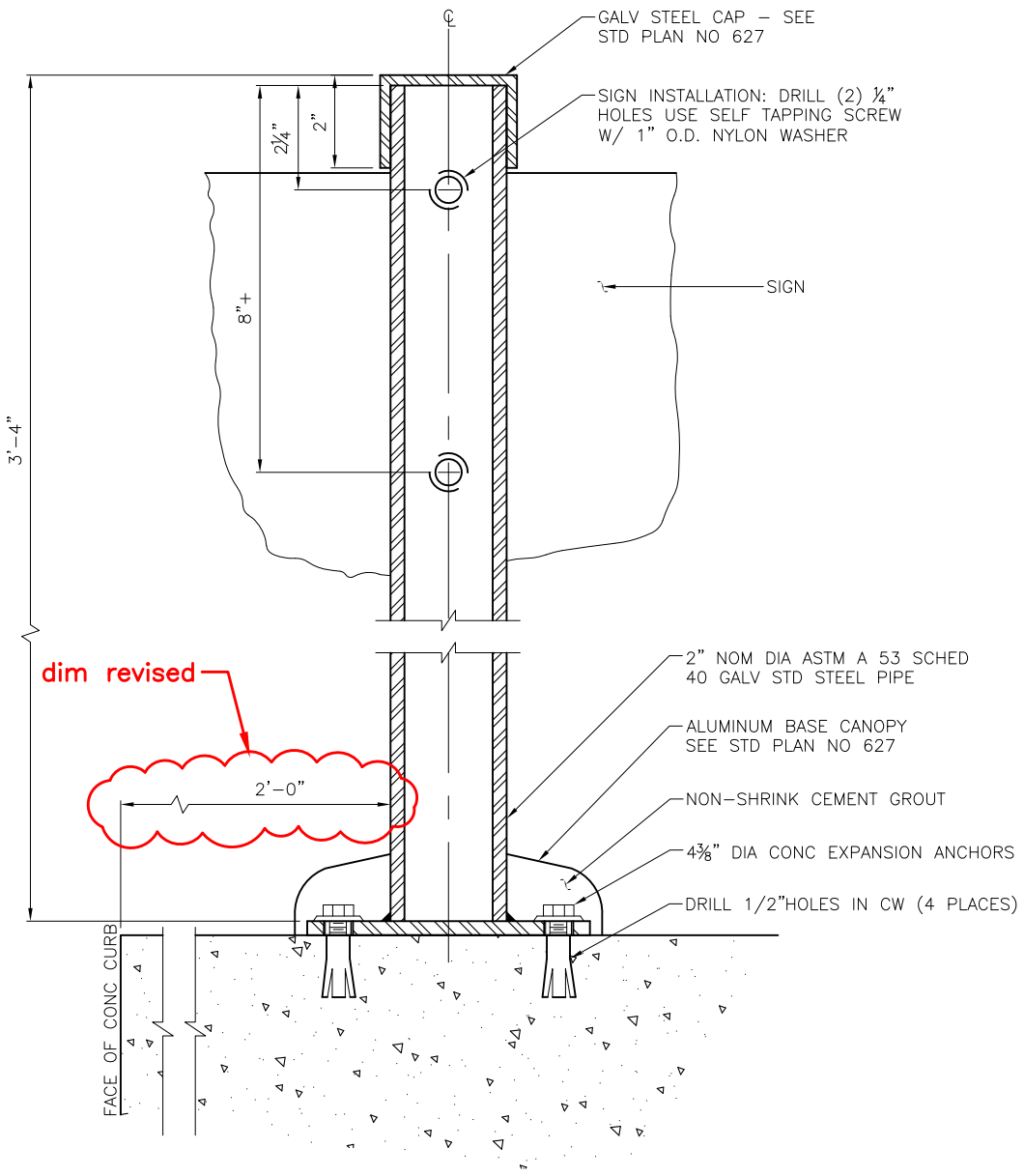

REF STD SPEC SEC 8-21

City of Seattle	NOT TO SCALE	SURFACE MOUNT METER POST INSTALLATION DETAIL

REV DATE: AUG 2013

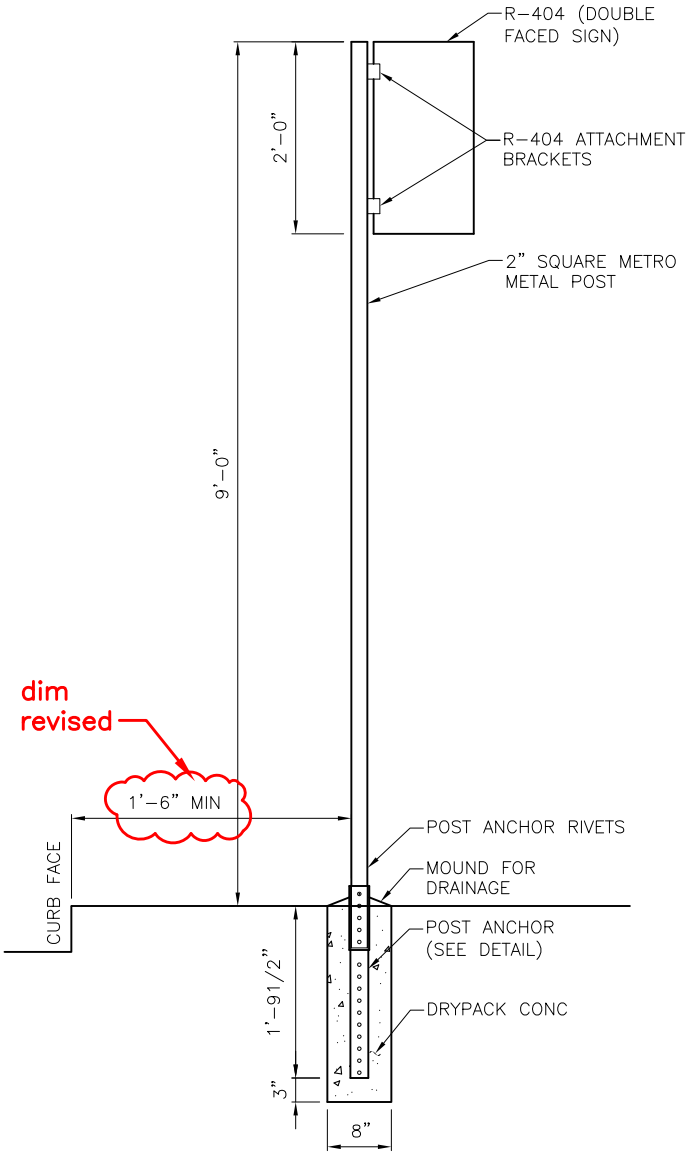

DIRECT BURIAL INSTALLATION

NOTES:

1. POST ANCHOR RIVETS SHALL BE 1 1/2"ABOVE GROUND LEVEL
2. ATTACHMENT BRACKETS SHALL FACE AWAY FROM STREET AS WHEN POST IS LOCATED 3'-0" FROM EDGE OF CURB. ATTACHMENT BRACKETS SHALL FACE TOWARDS STREET (TS) WHEN POST IS LOCATED AT BACK SIDE OF SIDEWALK
3. FOR POST RELOCATIONS, OLD CONCRETE SHALL BE REMOVED FROM POST
4. ALL SIGNS, STRUCTURES AND HARDWARE PROVIDED BY METRO EXCEPT WHERE NOTED OTHERWISE ON THIS STD PLAN.
5. WHERE SURFACE MOUNTED BUS ZONE SIGNS ARE REQUIRED ON SLOPED SIDEWALK, THE CONTRACTOR SHALL PLUMB THE POST BY BUILDING A NON-SHRINK GROUT PAD UNDER PEDESTAL ASSEMBLY WITH SMOOTH 1H TO 1V TAPER ON THE GROUT EDGE. THE BOLT ANCHOR LENGTH SHALL BE ADJUSTED TO PROVIDE A MIN 3 1/2 INCH EMBEDMENT THROUGH THE GROUT INTO THE EXISTING CONCRETE.

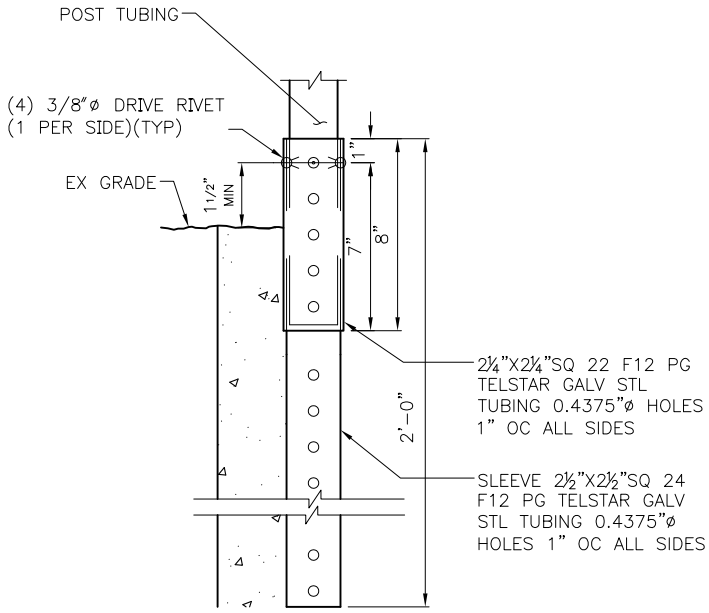

POST ANCHOR DETAIL

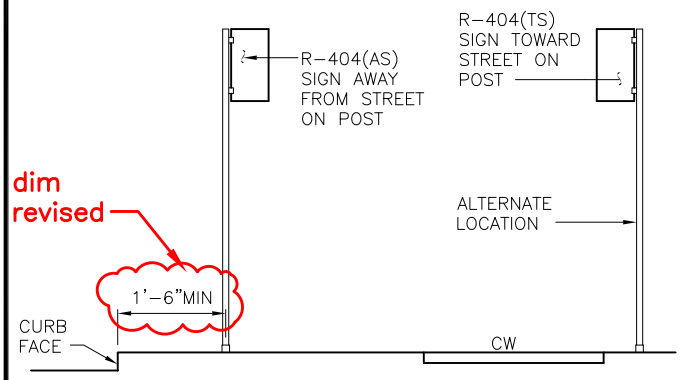

SIGN LOCATION DETAIL

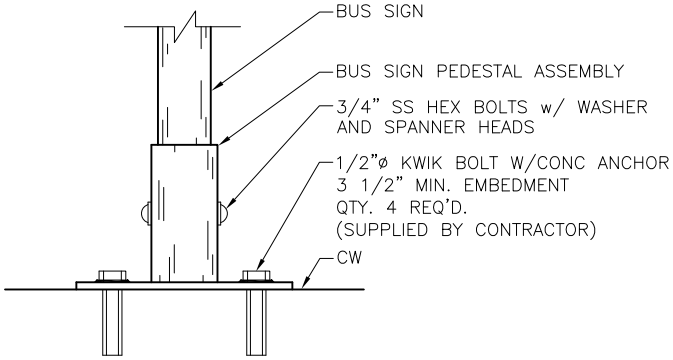

SURFACE MOUNT INSTALLATION

REF STD SPEC SEC 8-21

City of Seattle	NOT TO SCALE	METRO BUS ZONE SIGN INSTALLATION