REV DATE: DEC 2013

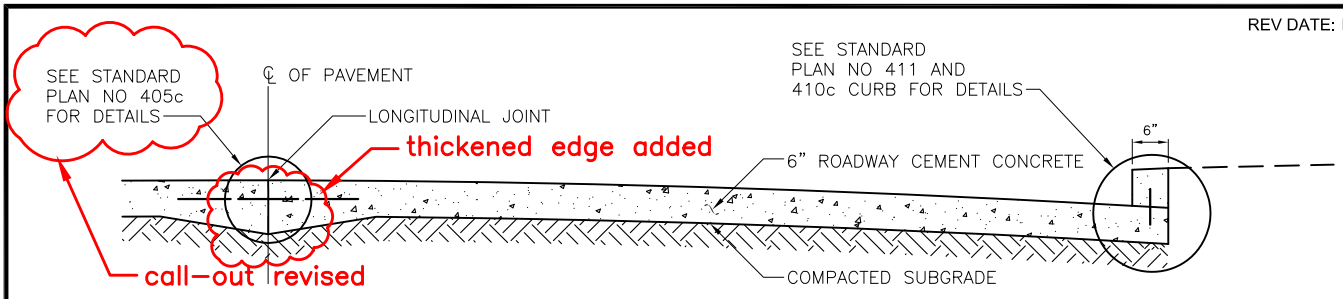

401A–CEMENT CONCRETE PAVEMENT WITH INTEGRAL CURB

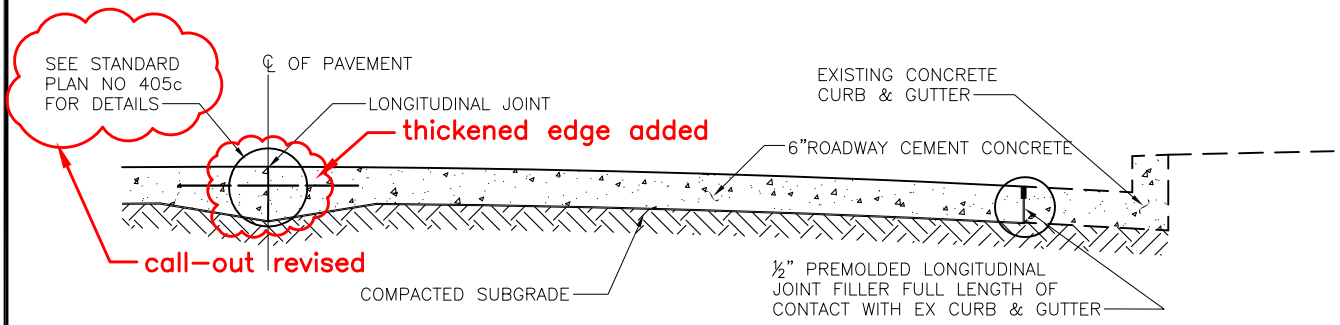

401B–CEMENT CONCRETE PAVEMENT WITH EXISTING CURB & GUTTER

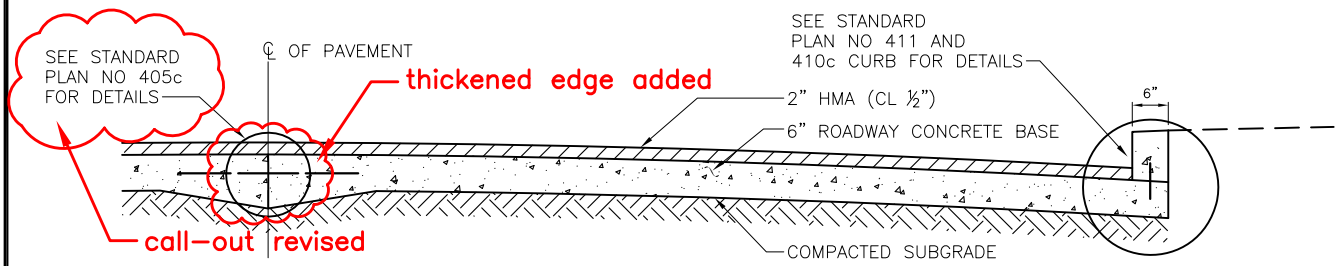

401C–HOT MIX ASPHALT ON CEMENT CONCRETE BASE

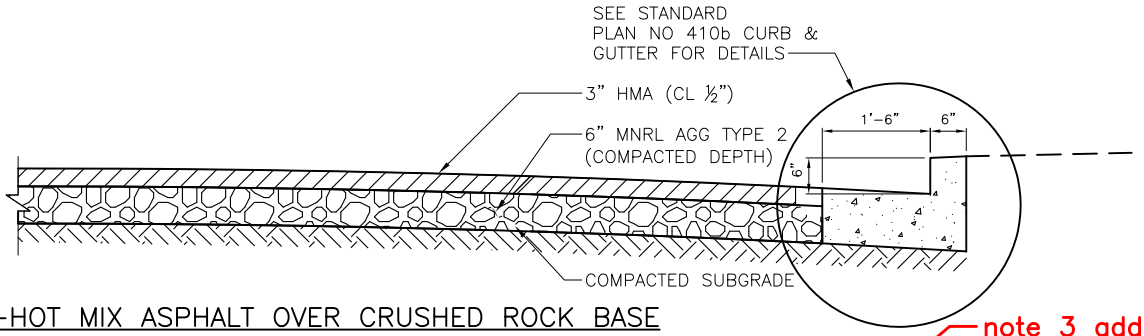

401D–HOT MIX ASPHALT OVER CRUSHED ROCK BASE

note 3 added, notes 1 & 2 revised

HMA DESIGN CRITERIA:

1. 3 MILLION ESAL'S UNLESS OTHERWISE SPECIFIED IN CONTRACT DOCUMENTS
2. ASPHALT PG 64–22 UNLESS OTHERWISE SPECIFIED IN CONTRACT DOCUMENTS
3. WARM MIX ASPHALT MAY BE USED IN PLACE OF HMA WHERE SHOWN ON THE DRAWINGS

REF STD SPEC SEC 4-04, 5-04, 5-05, 8-04

City of Seattle	NOT TO SCALE	RESIDENTIAL PAVEMENT SECTIONS

REV DATE: DEC 2013

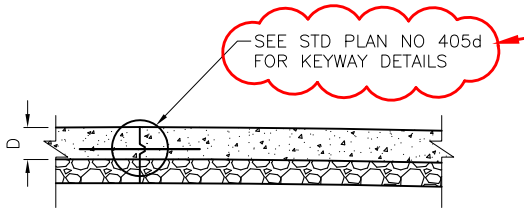

call–out revised

NOTES:
IF CONC THICKNESS IS 9 INCH OR GREATER
OPTIONAL KEYWAY MAY BE USED
SEE STD PLANS NO 405c & 405d FOR DETAILS

OPTIONAL KEYWAY
FOR LONGITUDINAL JOINT

circle size adjusted

tie bar centered in pavement

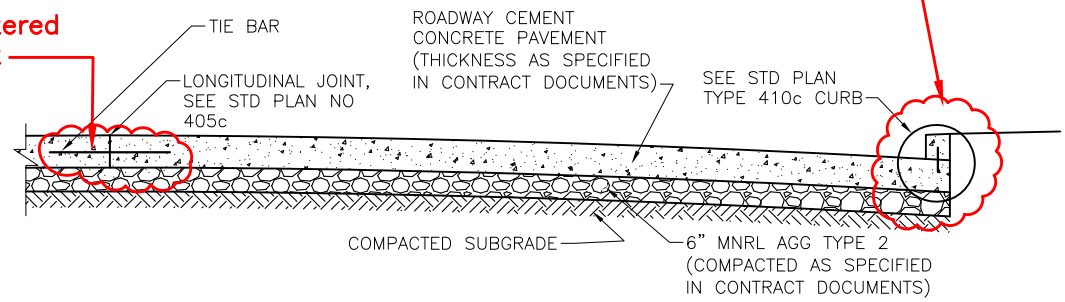

402A–ROADWAY CONCRETE PAVEMENT ON CRUSHED ROCK

circle size adjusted

tie bar centered in pavement

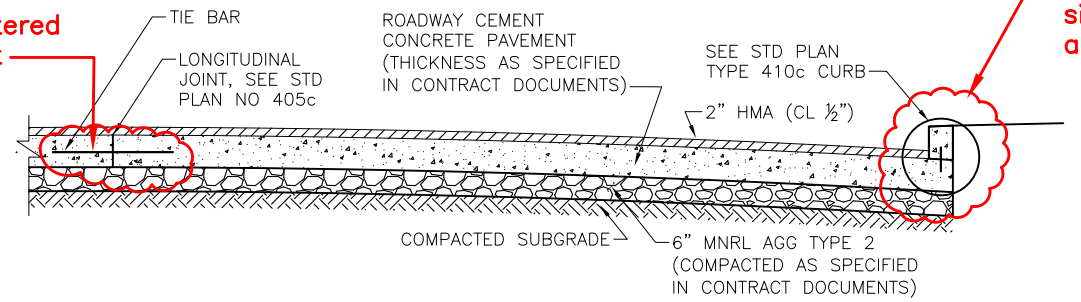

402B–HOT MIX ASPHALT ON CEMENT CONCRETE ON CRUSHED ROCK

circle size adjusted

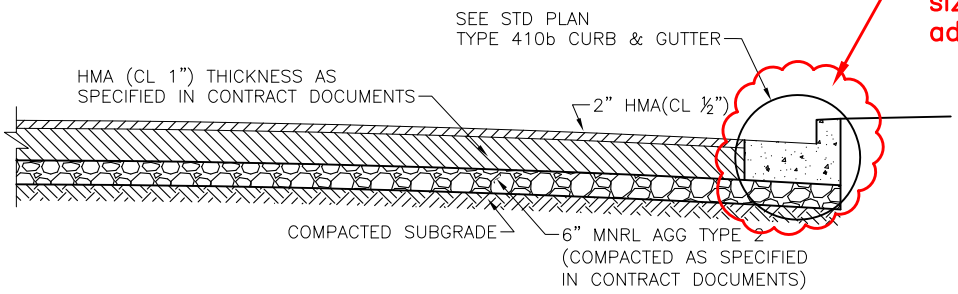

402C–HOT MIX ASPHALT ON CRUSHED ROCK BASE

note 1 revised, note 3 added

4–04 & 5–04 added

HMA DESIGN CRITERIA:
1. 10 MILLION ESAL'S UNLESS OTHERWISE SPECIFIED IN CONTRACT DOCUMENTS.
2. ASPHALT PG 64–22 UNLESS OTHERWISE SPECIFIED IN CONTRACT DOCUMENTS.
3. WARM MIX ASPHALT MAY BE USED IN PLACE OF HMA WHERE SHOWN ON THE DRAWINGS.

REF STD SPEC SEC 4-04, 5-04, 5-05 & 8-04

City of Seattle	NOT TO SCALE	COMMERCIAL AND ARTERIAL PAVEMENT SECTIONS

REV DATE: FEB 2014

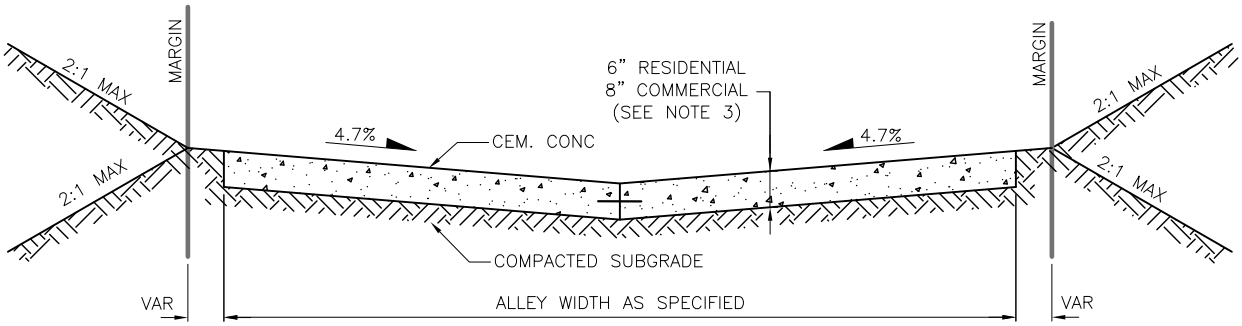

CONCRETE ALLEY PAVEMENT

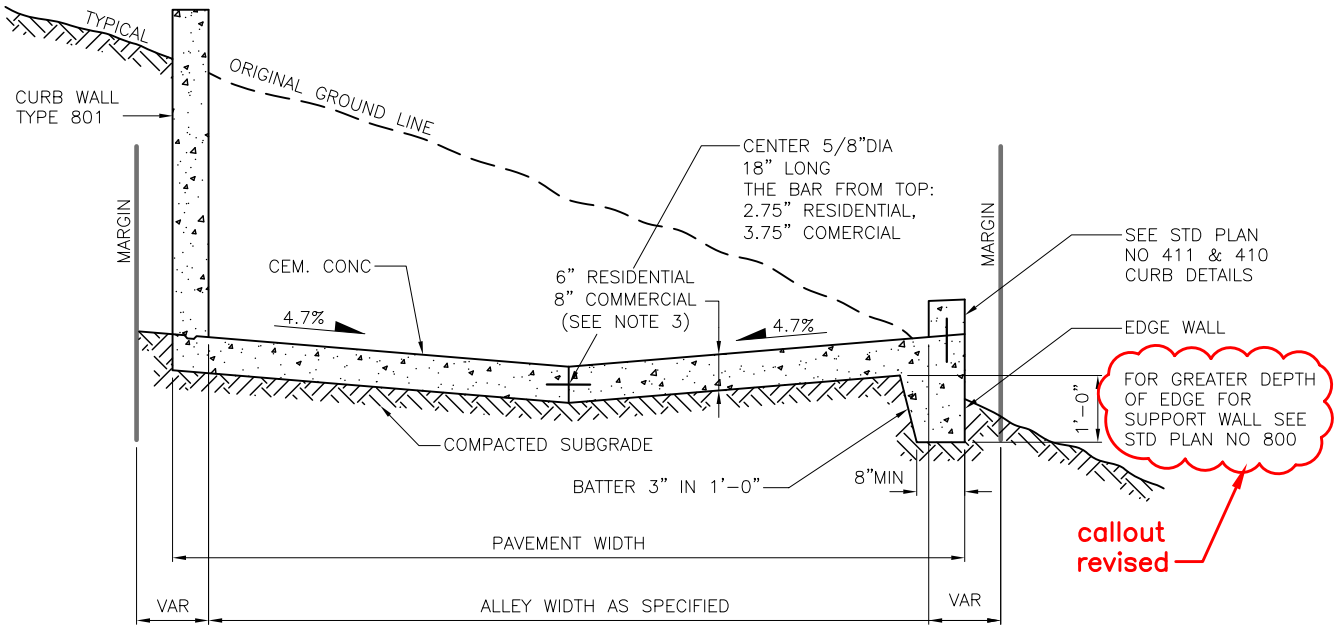

CEMENT CONCRETE ALLEY PAVEMENT
403B–FOR SHALLOW EMBANKMENT AREA

NOTES:

1. WHEN ALLEY PAVEMENT IS 16'–0" OR WIDER PLACE CONSTRUCTION JOINT WITH TIE BAR PER STD PLAN NO 405 ALONG CENTERLINE OF ALLEY.
2. FOR ADA ACCESSIBLE ACCESS TO ENTRY IN ALLEY CONSIDER ALTERNATIVE DESIGN; SUBJECT TO APPROVAL BY THE ENGINEER.
3. 8" OR AS SHOWN IN CONTRACT OR APPROVAL BY THE ENGINEER.

spec section revised

REF STD SPEC SEC 8-17, 8-19

City of Seattle	NOT TO SCALE	ROADWAY CEMENT CONCRETE ALLEY PAVEMENTS

REV DATE: DEC 2013

NOTES:

1. DUE TO POTENTIAL LOSS OF SOIL STRENGTH IN AREAS ADJACENT TO TRENCH OPENINGS, PAVEMENT REMOVAL SHALL BE WIDENED TO INCLUDE THE ZONE OF INFLUENCE.
2. SEE STREET AND SIDEWALK PAVEMENT OPENING AND RESTORATION RULES FOR MORE INFORMATION ON PAVEMENT OPENINGS ZONE OF INFLUENCE.
   HTTP://WWW.SEATTLE.GOV/TRANSPORTATION/STUSE_PAVEMENTOPEN.HTM

note revised

dimensions revised

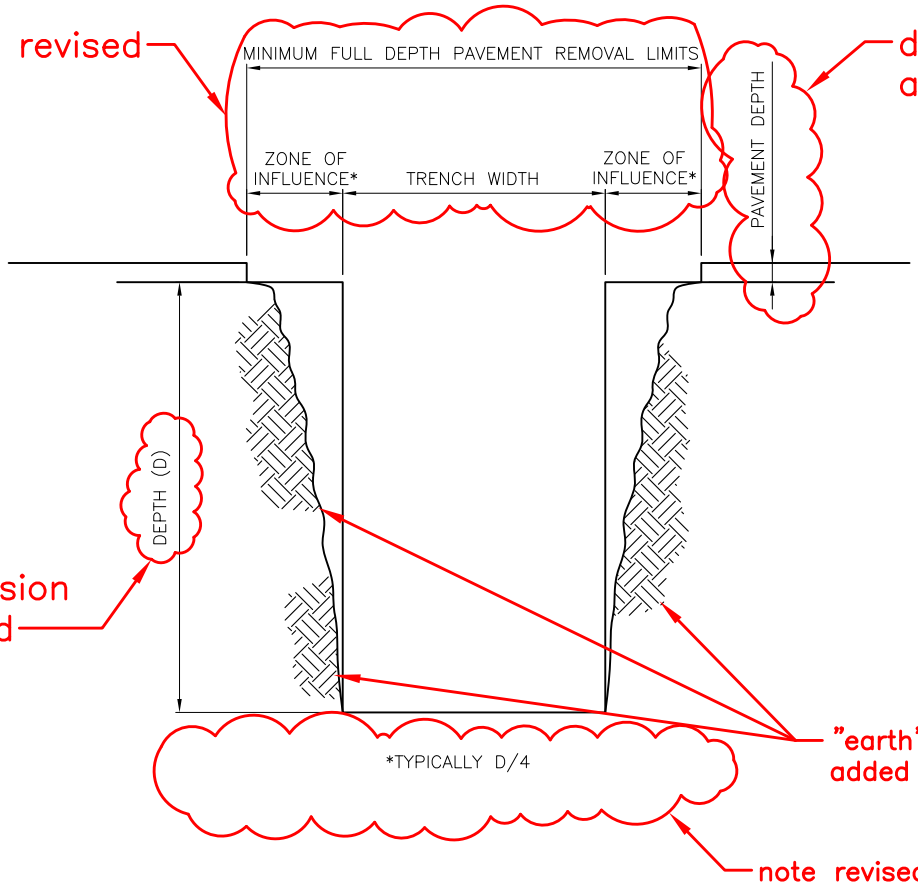

dimension added

dimension revised

"earth" hatching added for clarity

note revised

REF STD SPEC SEC 2-02, 2-04

City of Seattle	NOT TO SCALE	PAVEMENT OPENING ZONE OF INFLUENCE

REV DATE: DEC 2013

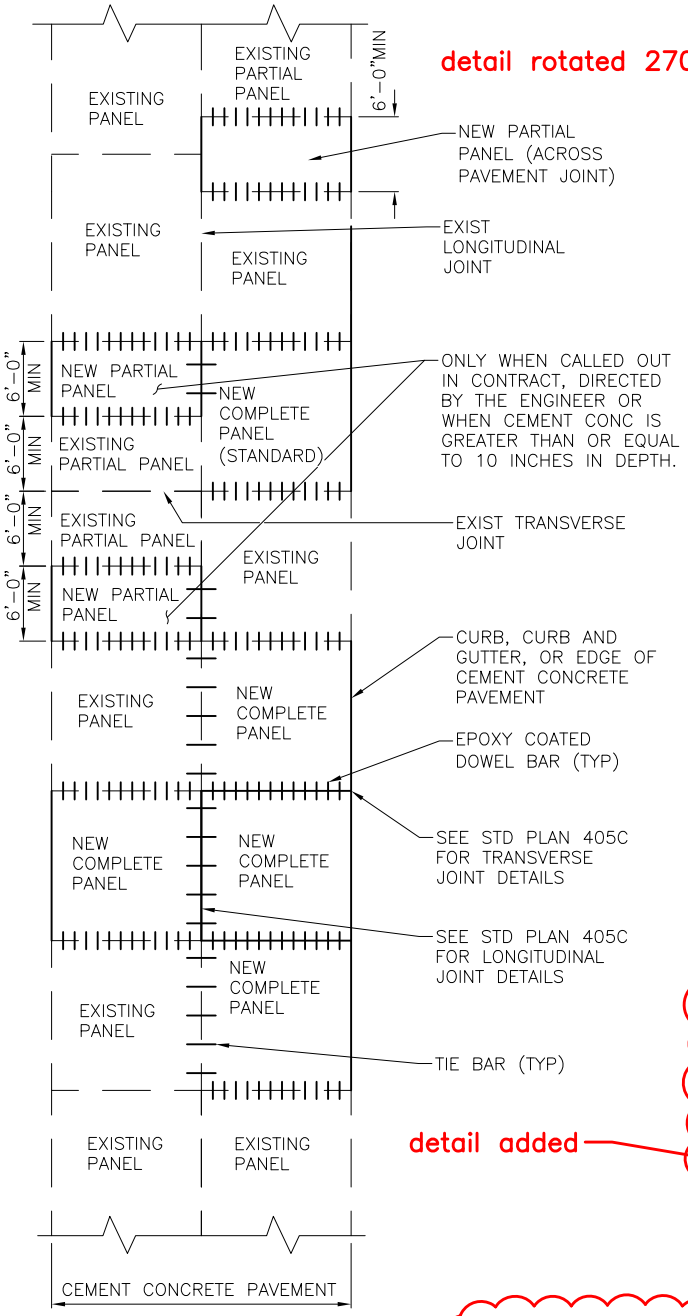

PLAN VIEW
PANEL REPLACEMENT

detail rotated 270°

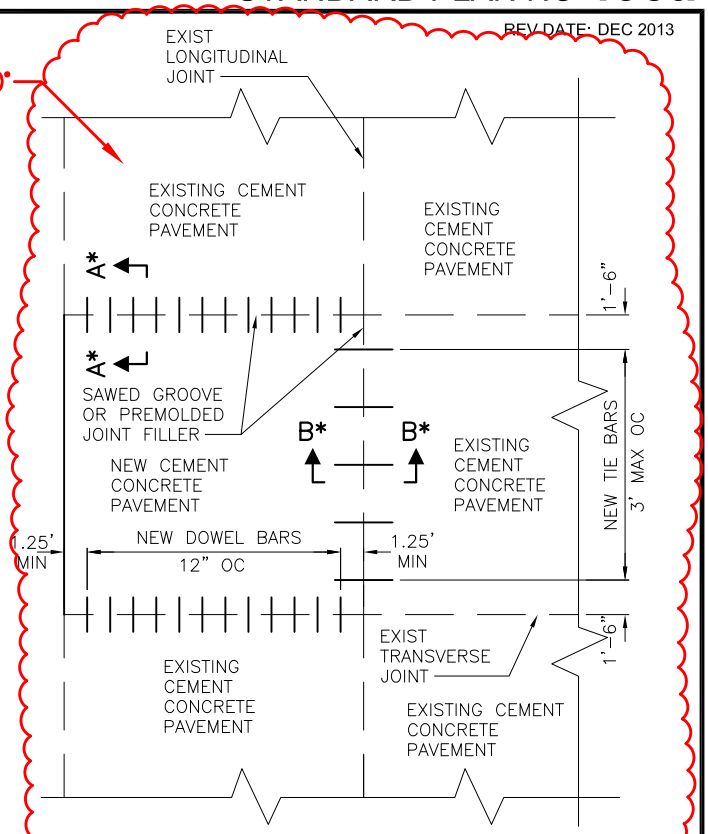

PLAN VIEW
COMPLETE PANEL REPLACEMENT

detail added

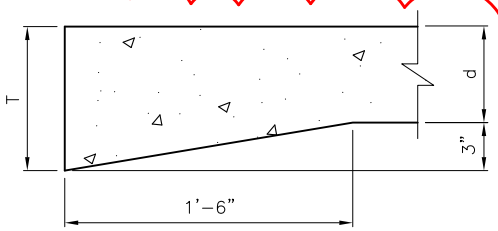

THICKENED EDGE DETAIL
(NOT NEEDED FOR TYPE A JOINTS WIDTH d ≥10")
(NOT NEEDED FOR TYPE B JOINTS WIDTH d≥9")

notes revised

NOTES

1. INSTALL TIE BARS ALONG LONGITUDINAL JOINT BETWEEN FULL PANEL REPLACEMENT AND EXIST CEMENT CONC PAVEMENT. TIE BARS ARE NOT INSTALLED BETWEEN CEMENT CONC PAVEMENT AND HOT MIX ASPHALT SHOULDERS.
2. TIE BARS AND DOWELS ARE NOT REQUIRED:
   - 2.1. WHEN INDICATED ON THE DRAWINGS BY "NO TIE BARS" OR "NO DOWEL BARS".
   - 2.2. WHEN EXISTING PAVEMENT IS LESS THAN A THICKNESS OF 8" OR WHEN THE ENGINEER DETERMINES THE EXISTING CONC NOT TO BE COMPETENT.
3. DO NOT PLACE LONGITUDINAL JOINTS OR SKEWED JOINTS WITHIN BIKE LANES.
4. WHEN PAVING ADJACENT TO EXISTING PANELS, THE NEW TRANSVERSE JOINTS SHALL BE PLACED TO MATCH JOINT LOCATIONS OF THE EXISTING ADJACENT PAVEMENT UNLESS OTHERWISE DIRECTED BY THE ENGINEER. SEE STD PLAN NO 405C FOR MAXIMUM TRANSVERSE JOINT SPACING.

A* SEE SECTION A–A STANDARD PLAN 405b
B* SEE SECTION B–B STANDARD PLAN 405b

REF STD SPEC SEC 5-05

City of Seattle	NOT TO SCALE	ROADWAY CONCRETE PAVEMENT REPAIR

REV DATE: DEC 2013

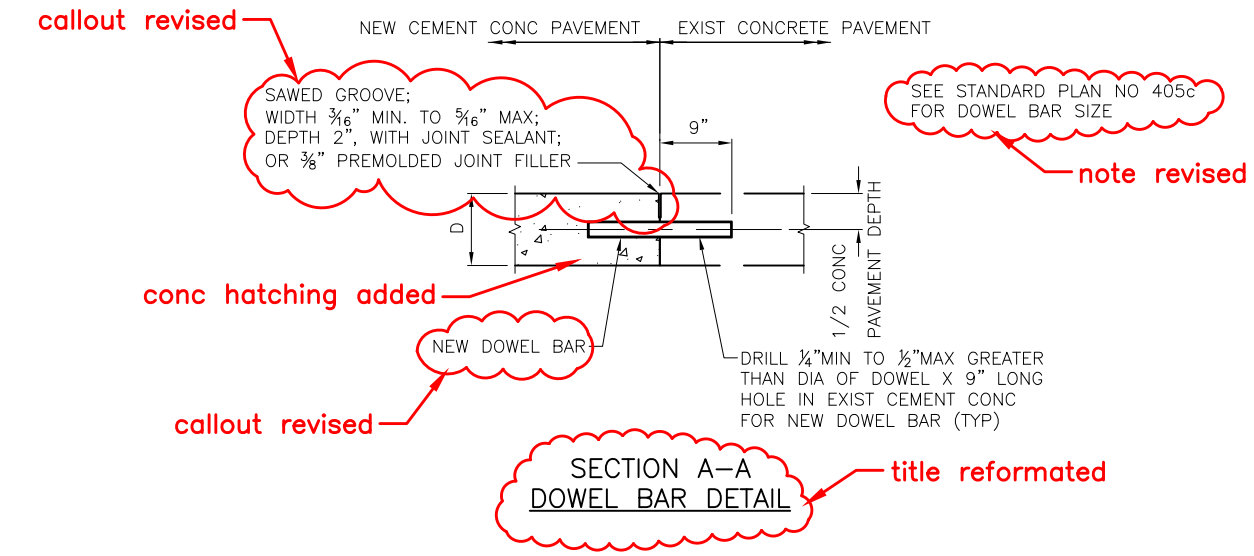

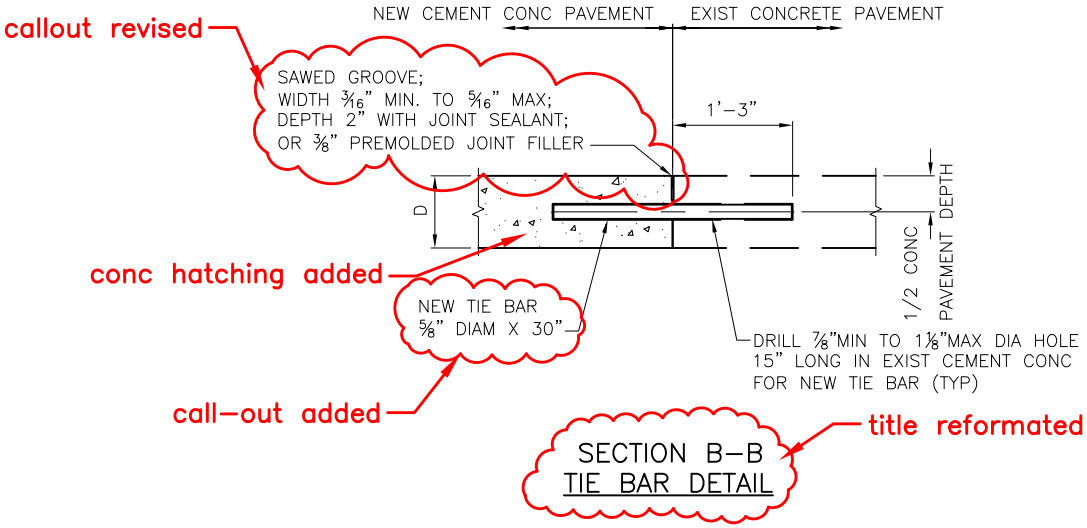

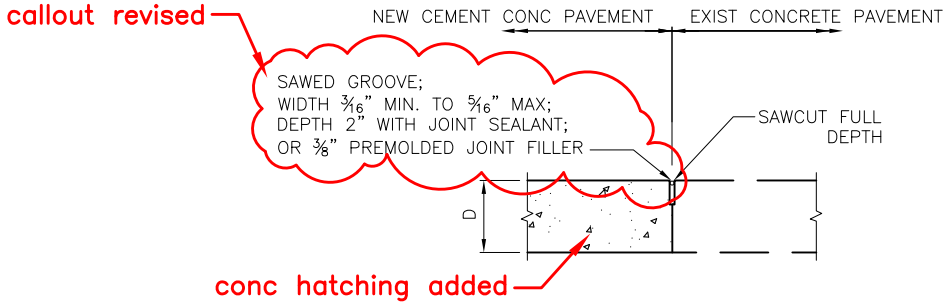

WITHOUT TIE BAR OR DOWEL

USE ONLY WHEN SHOWN IN
CONTRACT OR APPROVED BY
THE ENGINEER

REF STD SPEC SEC 5-05

City of Seattle	NOT TO SCALE	PAVEMENT REPAIR DOWEL BAR AND TIE BAR DETAILS

REV DATE: DEC 2013

revised

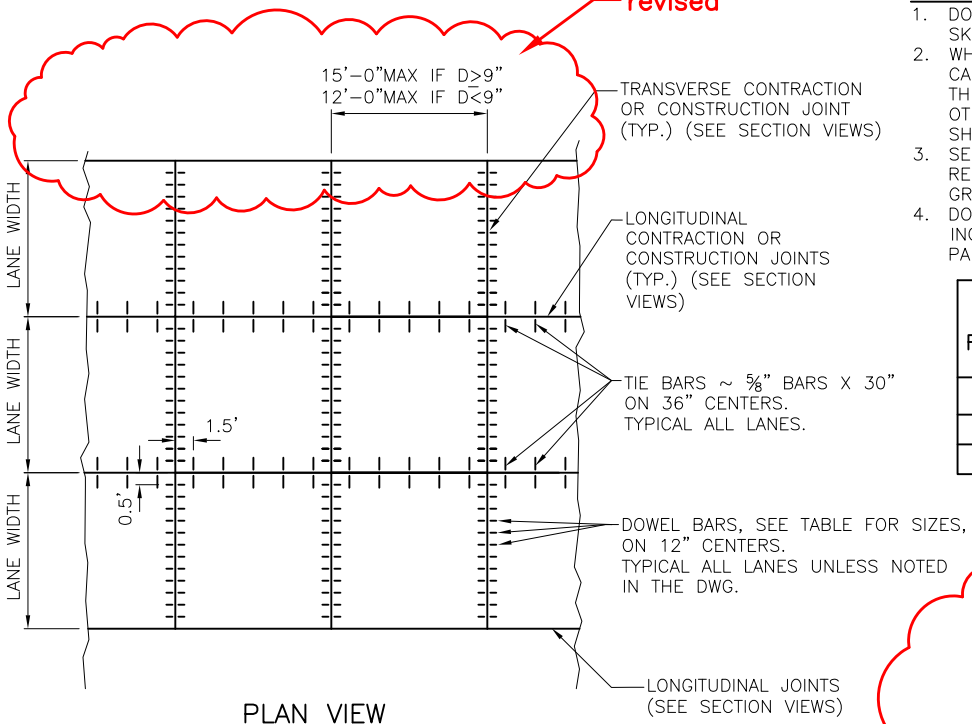

PLAN VIEW
PANEL REPLACEMENT

NOTES:

1. DO NOT PLACE LONGITUDINAL JOINTS OR SKEWED JOINTS WITHIN BIKE LANES.
2. WHEN A JOINT IS WITHIN 18 INCHES OF A CASTING JOINTS SHOULD BE SKEWED TO MEET THE CASTING AT 90 DEGREES UNLESS OTHERWISE DIRECTED BY THE ENGINEER OR SHOWN ON THE DRAWINGS.
3. SEE STD PLAN NO 406 OR DRAWINGS FOR REBAR DETAIL AROUND CASTING 18 INCHES OR GREATER FROM JOINTS.
4. DOWEL BARS SHALL NOT BE PLACED WITHIN 15 INCHES OF THE EDGE OF PAVEMENT OR A PARALLEL JOINT.

DEPTH (D) OF RDWY CEM. CONC	DOWEL BAR SIZE (DIA ø)
6"≤D <9"	1"X18"
9"≤D <11"	1¼"X18"
11"≤D	1½"X18"

section removed

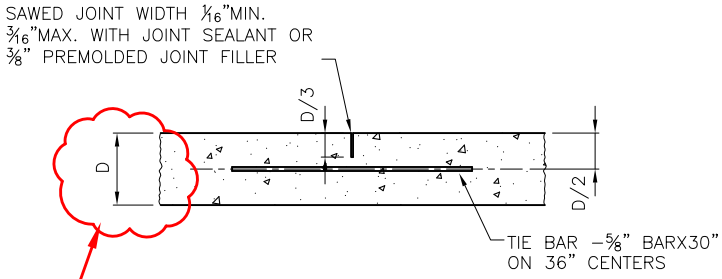

SECTION VIEW
LONGITUDINAL CONTRACTION JOINT

dimension revised

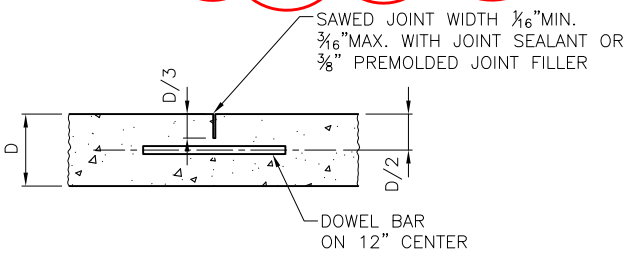

SECTION VIEW
TRANSVERSE CONTRACTION JOINT

callouts revised

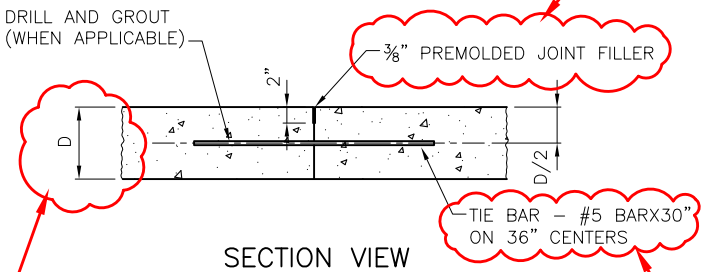

SECTION VIEW
LONGITUDINAL CONSTRUCTION JOINT

dimension revised

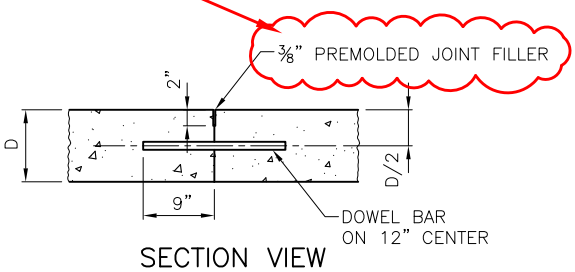

SECTION VIEW
TRANSVERSE CONSTRUCTION JOINT

call-out corrected

REF STD SPEC SEC 5-05

City of Seattle	NOT TO SCALE	ROADWAY CONCRETE PAVEMENT JOINTS

REV DATE: NOV 2013

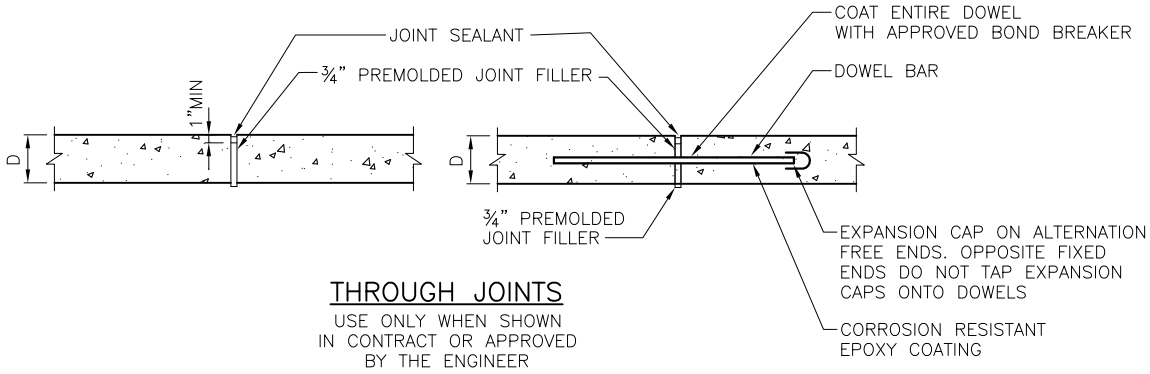

THROUGH JOINTS

USE ONLY WHEN SHOWN IN CONTRACT OR APPROVED BY THE ENGINEER

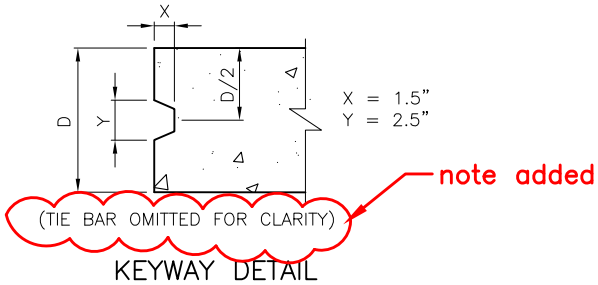

KEYWAY DETAIL

LONGITUDINAL JOINT WITH KEYWAY

(OPTIONAL FOR ≥9 INCHES ONLY)

NOTE:

USE OF OPTIONAL KEYWAY MAY BE REVOKED BY THE ENGINEER AT ANYTIME DUE TO QUALITY CONTROL ISSUES WITH MAINTAINING PLACEMENT REQUIREMENTS WITHIN ±⅜ INCH VERTICALLY.

REF STD SPEC SEC 5-05

City of Seattle	NOT TO SCALE	THROUGH JOINTS AND OPTIONAL KEYWAYS FOR CEMENT CONCRETE ROADWAY

REV DATE: DEC 2013

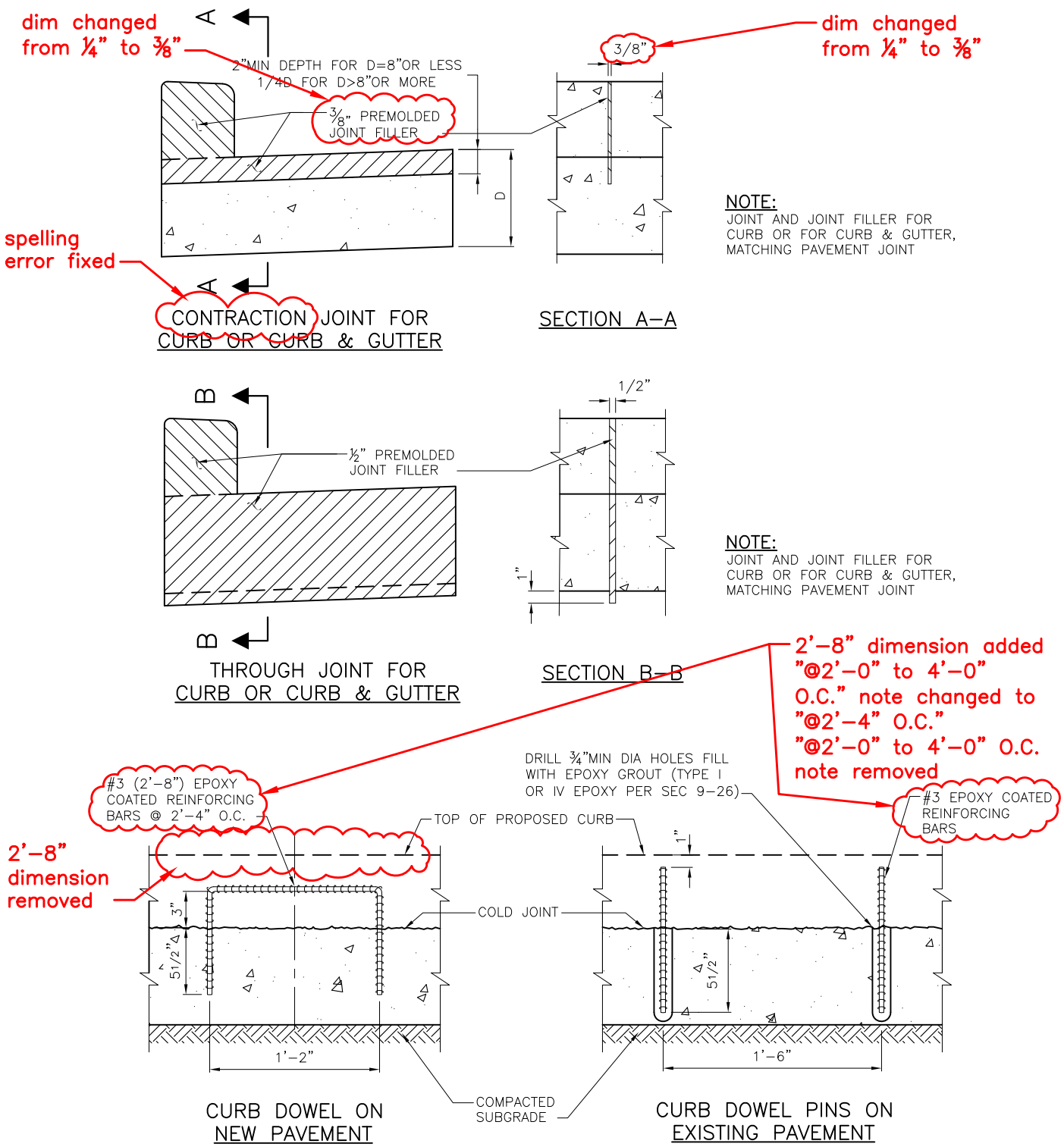

DOWELS FOR DOWELLED CURB CONSTRUCTION

REF STD SPEC SEC 8-04 "6–02" reference removed

City of Seattle	NOT TO SCALE	CURB JOINTS & DOWELS

REV DATE: DEC 2013

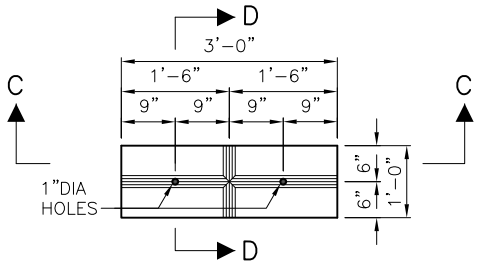

CURB PLAN

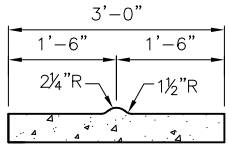

SECTION C–C

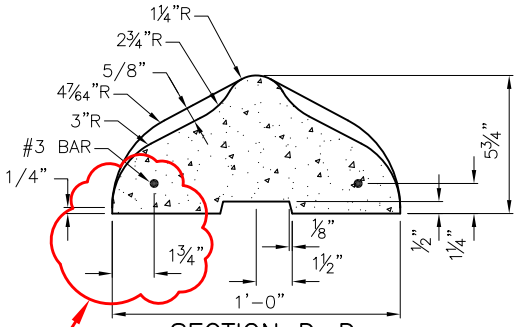

SECTION D–D

holes & dimensions added

dimension to rebar corrected

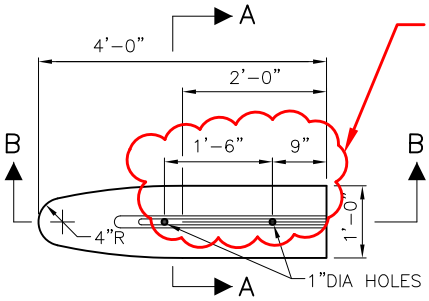

NOSING

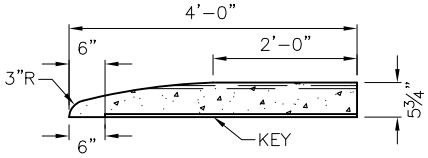

SECTION B–B

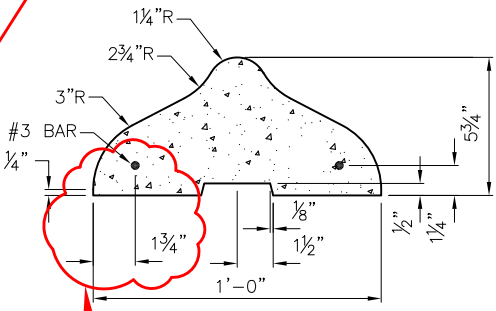

SECTION A–A

dimension to rebar corrected

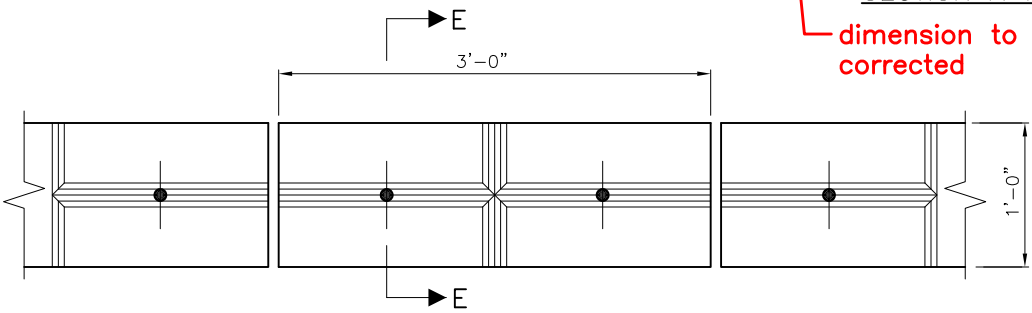

INSTALLATION DETAIL FOR STRAIGHT PRECAST TRAFFIC CURB

note revised

NOTE:
INSTALL 8" #4 REBAR IN EVERY HOLE AND FILL HOLE WITH GROUT

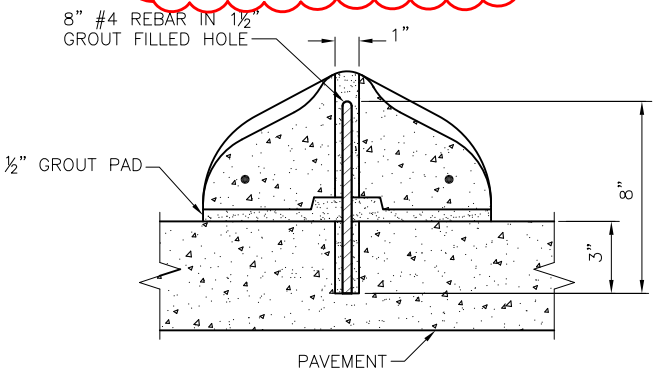

SECTION E–E

REF STD SPEC SEC 8-07

City of Seattle	NOT TO SCALE	3' PRECAST TRAFFIC CURB (DUAL SLOPED)

REV DATE: DEC 2013

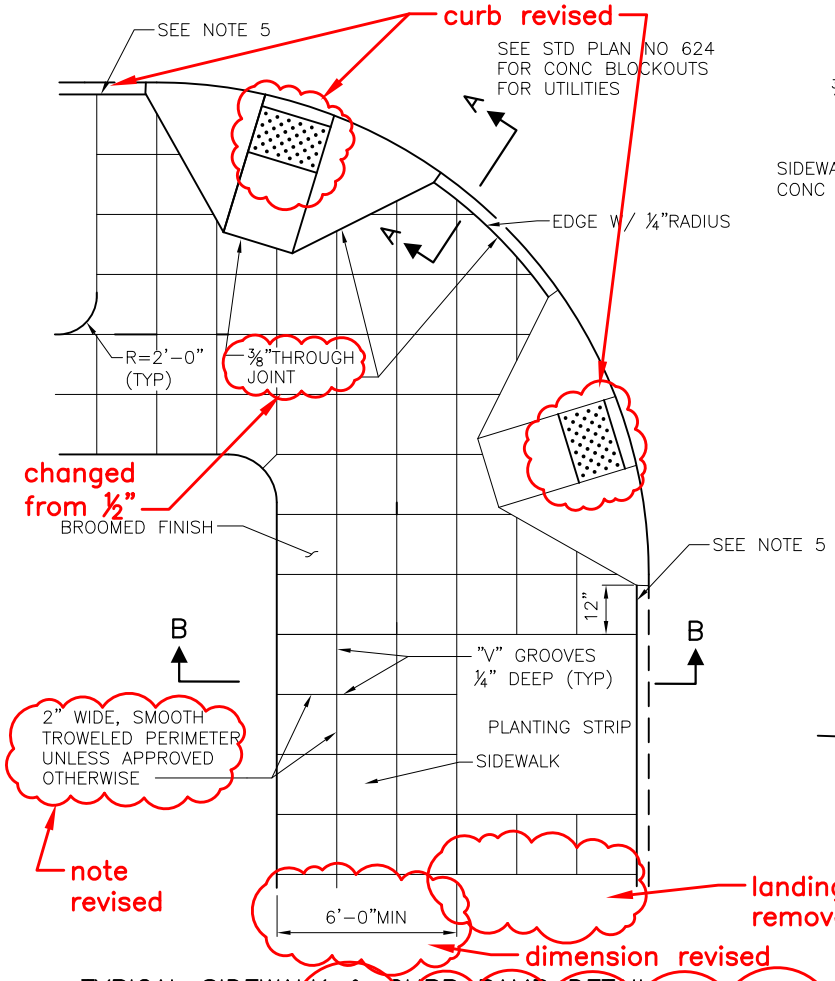

TYPICAL SIDEWALK & CURB RAMP DETAIL

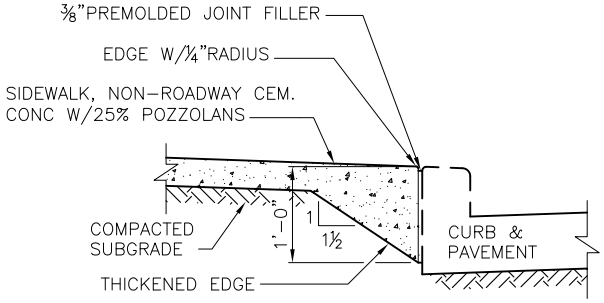

THROUGH JOINT @ SECTION A-A

UNLESS CURB IS MONOLITHIC WITH SIDEWALK

spelling fixed

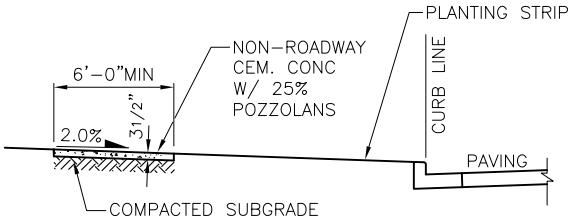

SECTION B-B

typical sidewalk detail, through joint and contraction joine details removed

NOTES:

1. ⅜" THROUGH AND CONTRACTION JOINTS SHALL BE LOCATED AS REQUIRED BY SECTION 8-14.3(6).
2. "V" GROOVE SCORING SHALL MATCH PATTERN IN ADJACENT EXISTING SIDEWALK OR SHALL BE A 2' SQUARE SCORING PATTERN UNLESS OTHERWISE OTHERWISE APPROVED BY THE ENGINEER.
3. FOR CURB RAMPS, SEE STANDARD PLAN NO 422.
4. FOR TREE PITS, SEE STANDARD PLAN NO 424.
5. 12" MINIMUM BETWEEN EDGE OF RAMP WING AND PLANTING STRIP IS DESIRABLE.
6. ALL SIDEWALK SHALL BE NON-ROADWAY CEM CONC W/ 25% POZZOLANS.

notes revised

REF STD SPEC SEC 8-14

City of Seattle	NOT TO SCALE	CONCRETE SIDEWALK DETAILS

REV DATE: DEC 2013

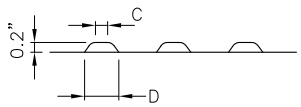

	MIN.	MAX.
A	1.6"	2.4"
B	0.65"	1.5"
C	50% TO 65% OF D	
D	0.9"	1.4"

TRUNCATED DOMES PATTERN
DETECTABLE WARNING CONC PANELS

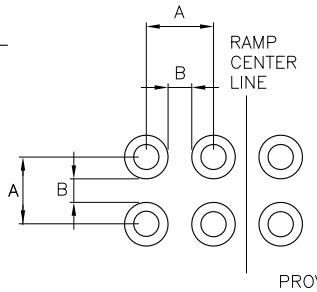

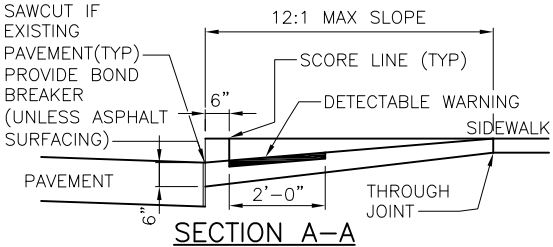

SECTION A–A

CURB MONOLITHIC WITH RAMP. NEW PAVEMENT BLOCKED OUT FULL DEPTH. EXISTING PAVEMENT REMOVED AT FACE OF CURB

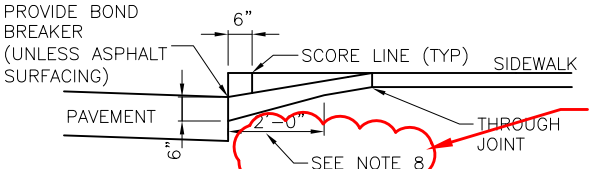

SECTION B–B

callout revised

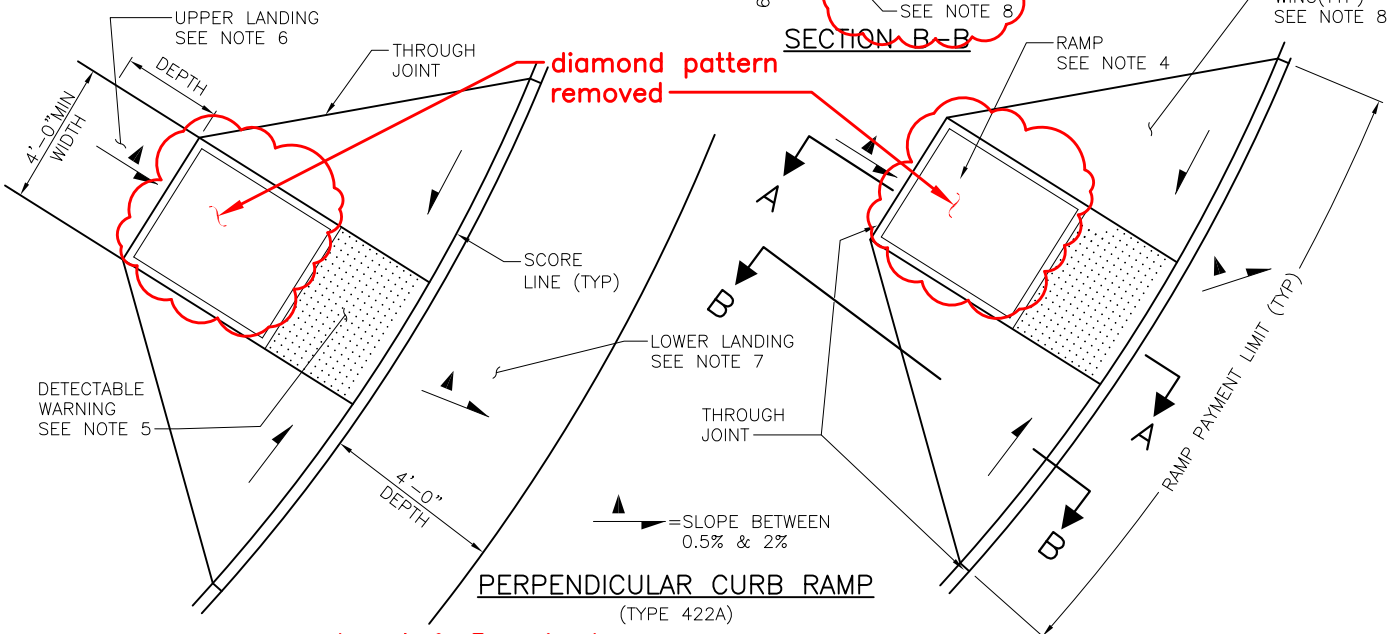

PERPENDICULAR CURB RAMP
(TYPE 422A)

notes 4 & 5 revised

NOTES:

1. TYPE 422A PERPENDICULAR CURB RAMP SHALL BE USED UNLESS OTHERWISE DIRECTED BY ENGINEER.
2. TWO CURB RAMPS SHALL BE INSTALLED AT EACH CORNER UNLESS OTHERWISE DIRECTED BY ENGINEER. RECOMMENDED MINIMUM DISTANCE BETWEEN TWO ADJACENT CURB RAMPS SHALL BE 3'–0". WHERE SPACE IS RESTRICTED THE MINIMUM DISTANCE BETWEEN TWO ADJACENT CURB RAMPS MAY BE REDUCED TO 1'–0".
3. CURB RAMP SHALL BE CONSTRUCTED WITH COMPANION RAMP ON OPPOSITE SIDE OF THE ROADWAY UNLESS OTHERWISE DIRECTED BY ENGINEER.
4. RAMP CENTERLINE SHALL BE RADIAL/PERPENDICULAR TO THE ALIGNMENT OF THE FACE OF CURB. RAMP SHALL HAVE A MAXIMUM SLOPE 12H:1V. AND A MINIMUM WIDTH OF 4'–0". THE CROSS SLOPE OF THE RAMP SHALL BE MAXIMUM OF 50H:1V. RAMP SURFACE SHALL HAVE A HEAVY BROOM BRUSHED SURFACE PARALLEL TO THE CURB. MAXIMUM RAMP LENGTH SHALL BE 15 FEET
5. DETECTABLE WARNING SHALL HAVE A TRUNCATED DOME PATTERN AS SHOWN, A MINIMUM WIDTH OF 2'–0" AND SHALL BE PLACED AT THE RAMP BOTTOM STARTING AT THE BACK OF CURB. DETECTABLE WARNING COLOR SHALL BE "FEDERAL SAFETY YELLOW", UNLESS OTHERWISE DIRECTED.
6. UPPER LANDING SHALL BE FULL WIDTH OF THE RAMP AND SHALL HAVE A MINIMUM DEPTH OF 4'–0". SLOPE ON THE UPPER LANDING SHALL BE BETWEEN 0.5% AND 2%. AVOID PLACING HANDHOLES, UTILITY CASTINGS OR OTHER OBSTRUCTIONS IN THE UPPER LANDING.
7. LOWER LANDING SHALL BE FULL WIDTH OF THE RAMP AND SHALL EXTEND A MINIMUM 4'–0" BEYOND DETECTABLE WARNING. THE LOWER LANDING SHALL BE THE WIDTH OF THE RAMP AND FALL WHOLLY WITHIN THE LEGAL CROSSWALK, MARKED OR UNMARKED. SLOPE ON THE LOWER LANDING SHALL BE BETWEEN 0.5% AND 2%. GUTTER FLOW LINE SHALL BE SURVEYED BY THE CONTRACTOR PRIOR TO CONSTRUCTION TO ENSURE PONDING OF WATER SHALL NOT OCCUR ON THE LOWER LANDING.
8. WINGS SHALL HAVE A MAXIMUM SLOPE OF 10H:1V. IF UPPER LANDING HAS A DEPTH LESS THAN 4'–0", THE MAXIMUM SLOPE FOR THE WINGS SHALL BE 12H:1V. WINGS SHALL HAVE A BRUSHED FINISH. PARALLEL TO THE CURB. THE CONCRETE WALK THICKENED EDGE ALONG THE CURB SHALL CONTINUE THROUGH EACH WING.
9. POLES, HYDRANTS AND OTHER ABOVE GROUND OBSTRUCTIONS SHALL HAVE A MINIMUM LATERAL CLEARANCE OF 1'–0" FROM THE UPPER LANDING AND RAMP SURFACE.
10. ALL CHANGES IN LEVEL ACROSS JOINTS SHALL BE FLUSH. ANY DIFFERENCE IN ELEVATION OF $\frac{3}{16}$ INCH OR GREATER SHALL BE REPAIRED OR REPLACED.
11. ALL SLOPE GRADES SHALL BE MEASURED OFF THE HORIZON–LINE. IF EXISTING SITE CONDITIONS CONFLICT WITH OBTAINING GRADES SHOWN, THE DESIGNER / CONTRACTOR SHALL MAKE MINIMUM ADJUSTMENTS TO THE GRADES SHOWN TO MEET EXISTING SITE CONDITIONS; ADJUSTMENTS ARE SUBJECT TO ENGINEER APPROVAL.

REF STD SPEC SEC 8-14

City of Seattle	NOT TO SCALE	CURB RAMP DETAILS

REV DATE: DEC 2013

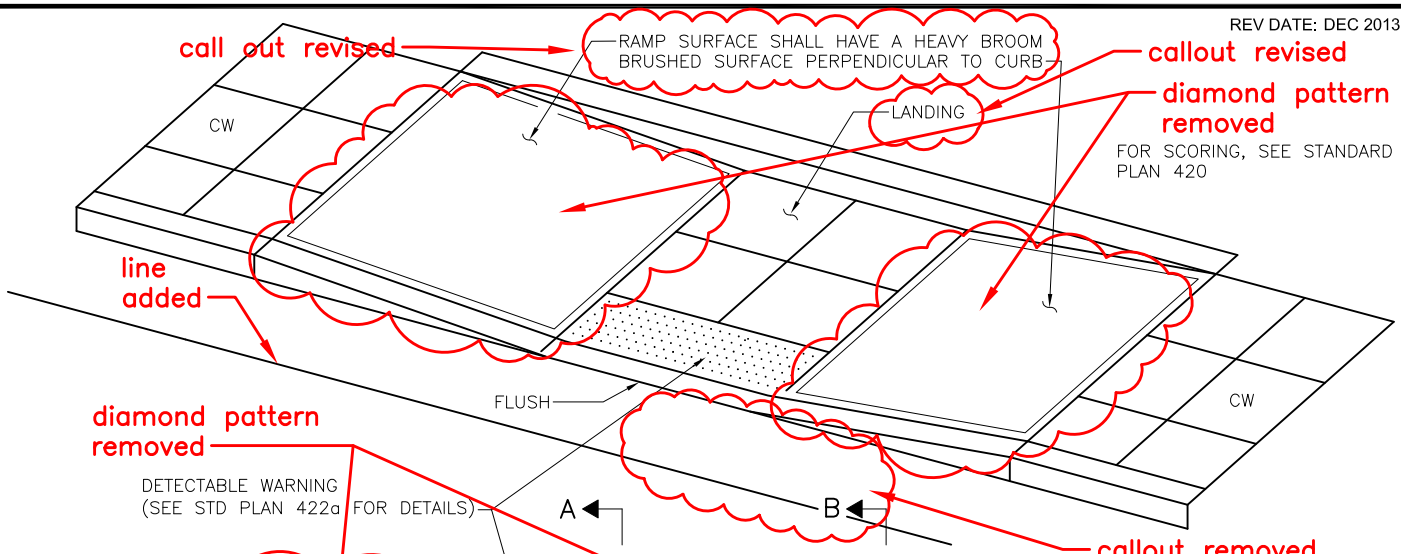

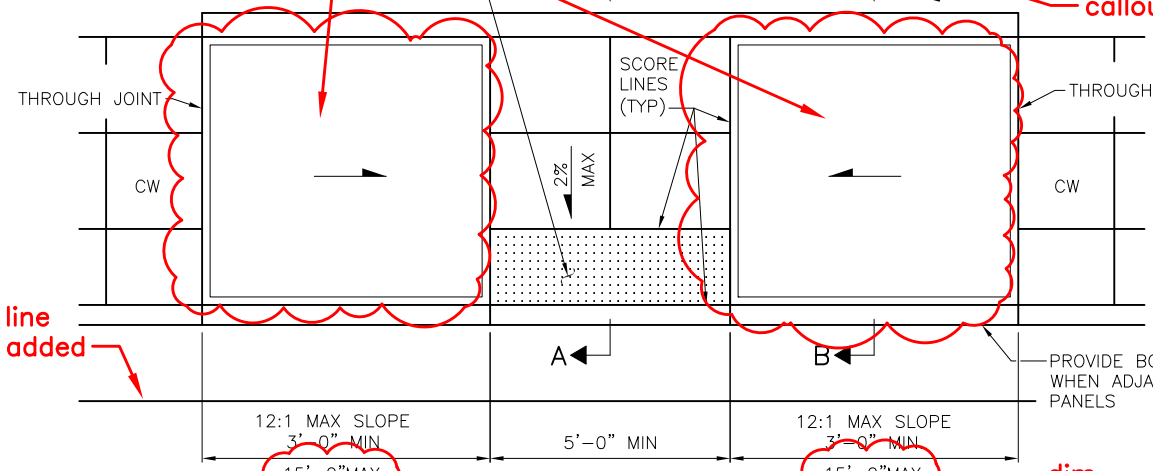

sections added, ramp locations detail moved to 422c

PARALLEL CURB RAMP

(TYPE 422b)

USE PARALLEL CURB RAMPS ONLY WHEN SHOWN IN DRAWINGS OR WITH APPROVAL OF ENGINEER. PARALLEL CURB RAMPS MAY ALSO BE USED ON CURVES; ALL REQUIREMENTS SHALL APPLY.

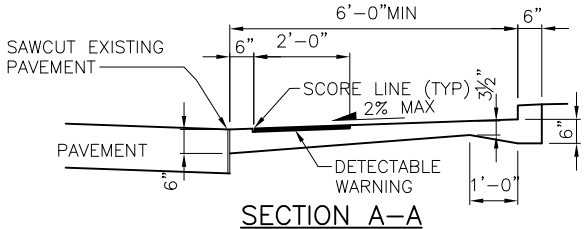

SECTION A–A
CURB MONOLITHIC WITH RAMP

NEW PAVEMENT BLOCKED OUT FULL DEPTH.
EXISTING PAVEMENT REMOVED AT FACE OF CURB

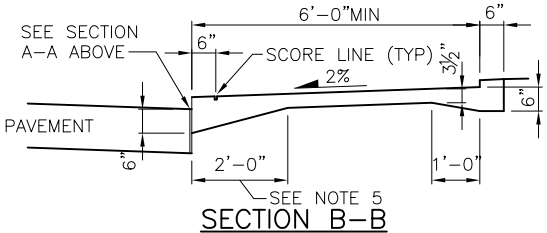

SECTION B–B
NON CURB & GUTTER

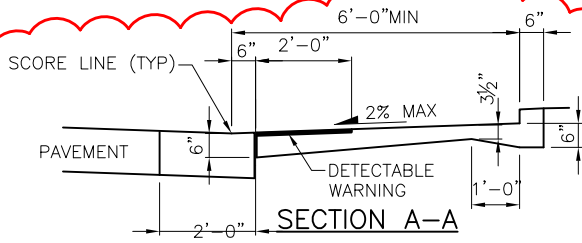

SECTION A–A
DEPRESSED CURB & GUTTER SEPARATE FROM RAMP

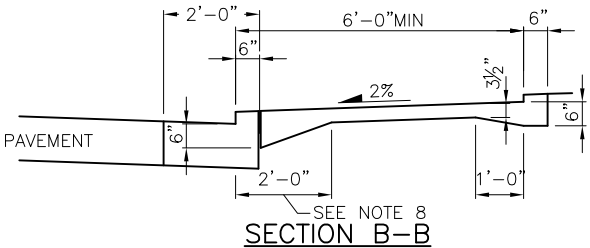

SECTION B–B
WITH CURB & GUTTER

REF STD SPEC SEC 8-14

City of Seattle	NOT TO SCALE	CURB RAMP DETAILS

REV DATE: NOV 2013

SEE STD PLAN NO 422a FOR NOTES

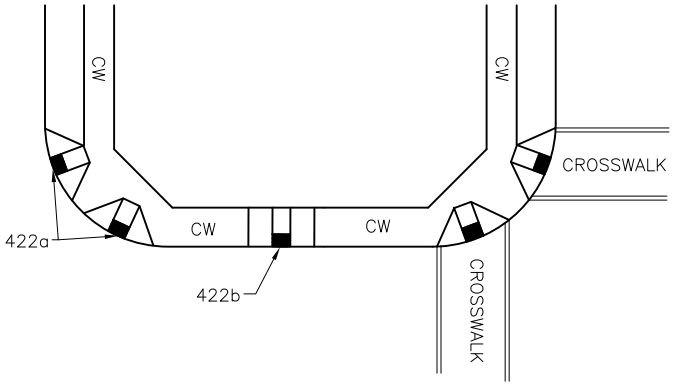

CURB RAMP LOCATIONS

NEW STD PLAN

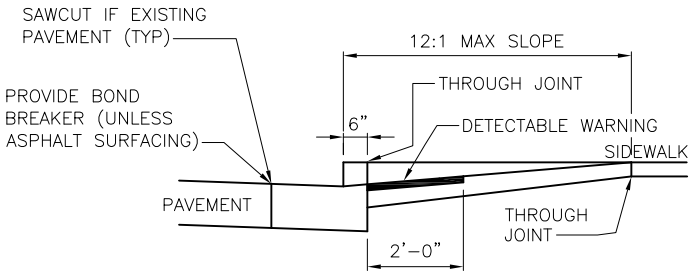

SECTION A–A

DEPRESSED CURB & GUTTER SEPARATE FROM RAMP.

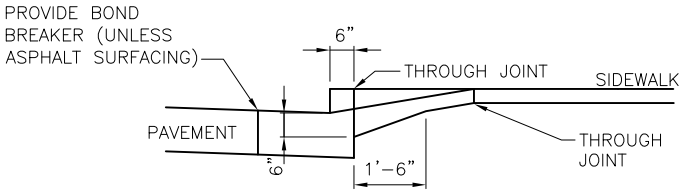

SECTION B–B

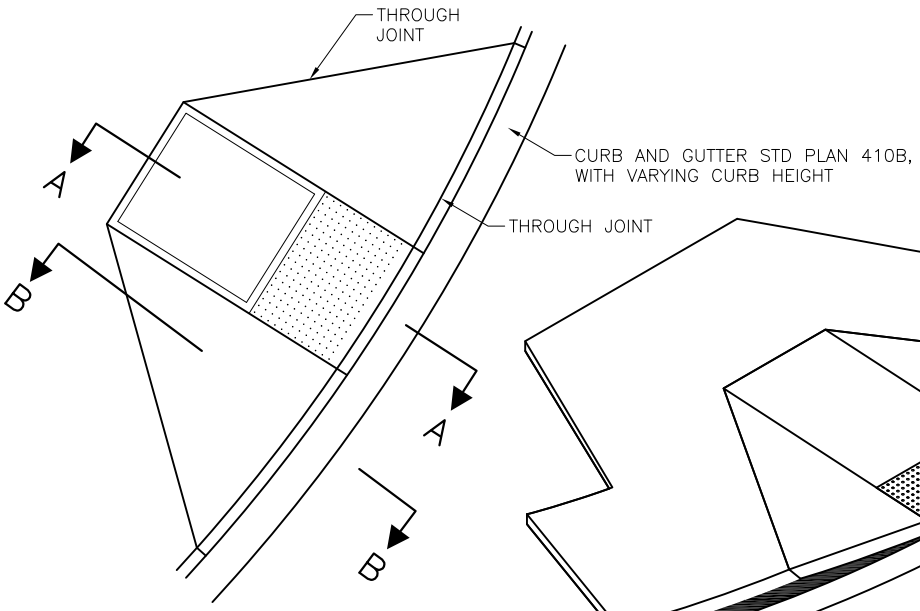

PERPENDICULAR CURB RAMP

(TYPE 422A WITH CURB AND GUTTER)

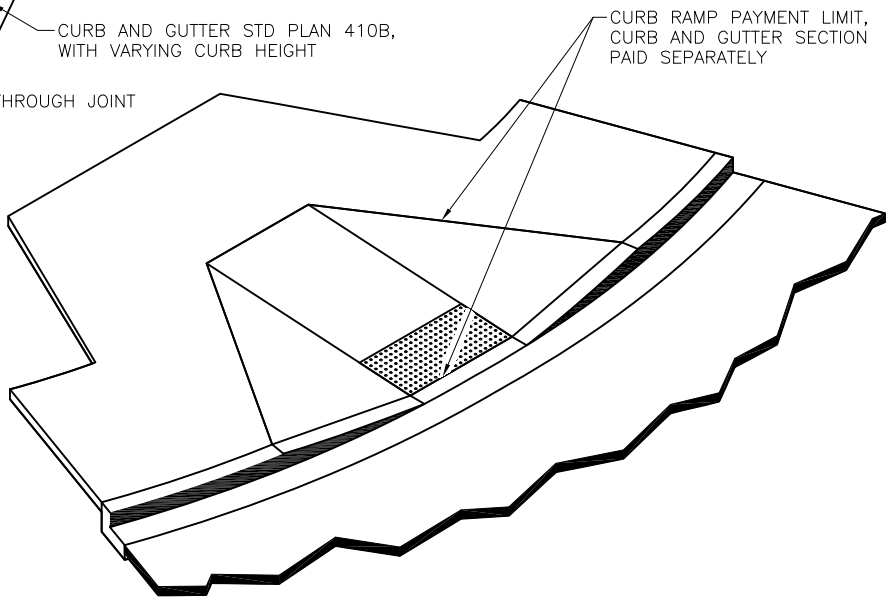

PERPENDICULAR CURB RAMP PAYMENT LIMIT

ISOMETRIC VIEW

NOTES:

1. FOR DETECTABLE WARNING PLATE/TRUNCATED DOMES DETAILS, SEE STANDARD PLAN 422a.
2. FOR NOTES AND DETAILS NOT SHOWN, SEE STANDARD PLAN 422a.

REF STD SPEC SEC 8-14

City of Seattle	NOT TO SCALE	CURB RAMP DETAILS

REV DATE: JUL 2013

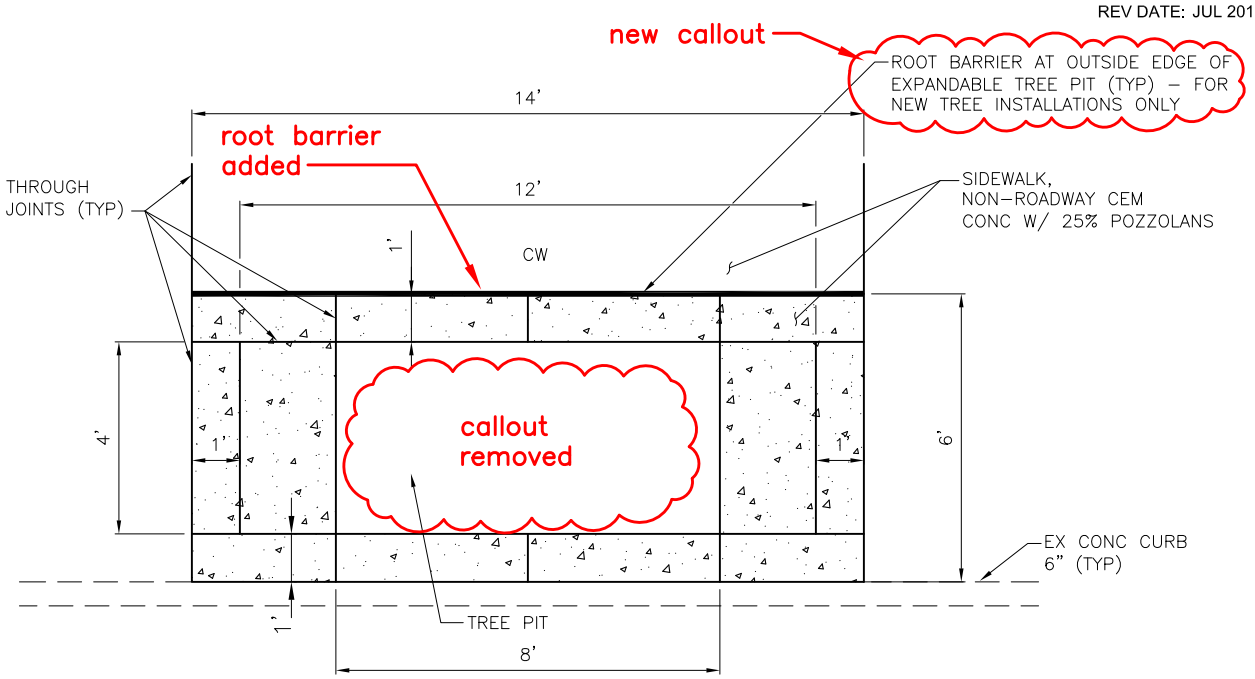

TYPE A

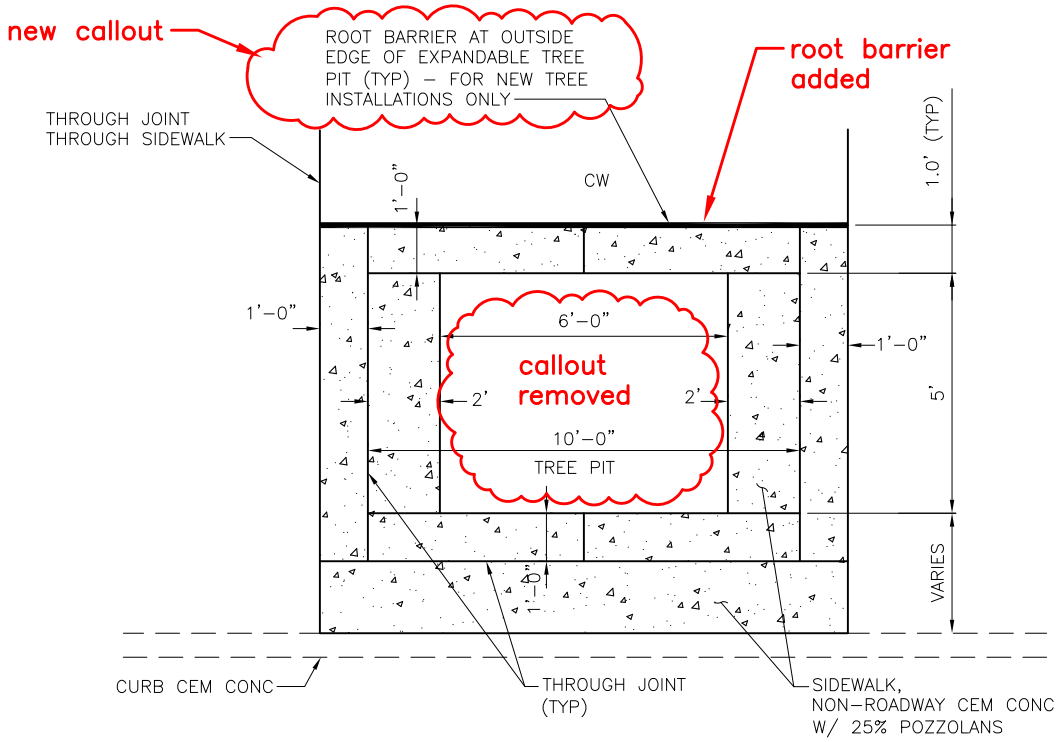

TYPE B

NOTES:
1. SEE STD PLAN 420 FOR CW SCORING DETAILS.
2. INSTALL ROOT BARRIER PER STANDARD PLAN NO 100a.

REF STD SPEC SEC 8-02 & 8-14

City of Seattle	NOT TO SCALE	EXPANDABLE TREE PIT DETAIL

REV DATE: JUL 2013

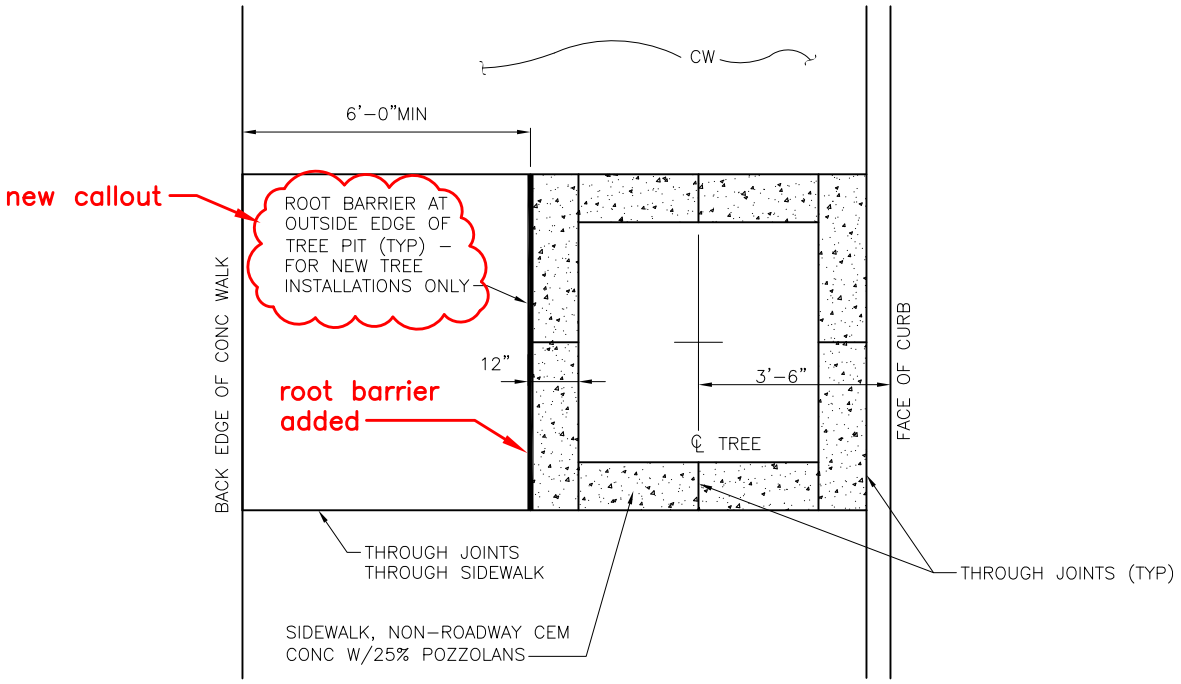

FOR ADDITIONAL SIDEWALK SCORING REQUIREMENTS SEE STD PLAN NO 420

TYPE C

TREE PIT DIMENSIONAL REQUIREMENTS:
- 24 SQ FT MIN TREE PIT SIZE
- 3'–0"MIN REQ'D BETWEEN TREE ℄ & FACE OF CURB
- 2'–0"MIN REQ'D BETWEEN TREE ℄ & CONC SIDEWALK
- 6'–0"MIN CONC WALKING SURFACE

NOTES:
1. INSTALLATIONS REQUIRING LESS THAN STANDARD MIN CLEARANCES SHALL BE ALLOWED ONLY WITH APPROVAL BY THE ENGINEER.
2. INSTALL ROOT BARRIER AS NOTED. SEE STANDARD PLAN NO 100a.
3. SEE STD PLAN 420 FOR CW SCORING DETAILS.

note 2 revised

REF STD SPEC SEC 8-02 & 8-14

City of Seattle	NOT TO SCALE	TREE PIT DETAIL

REV DATE: DEC 2013

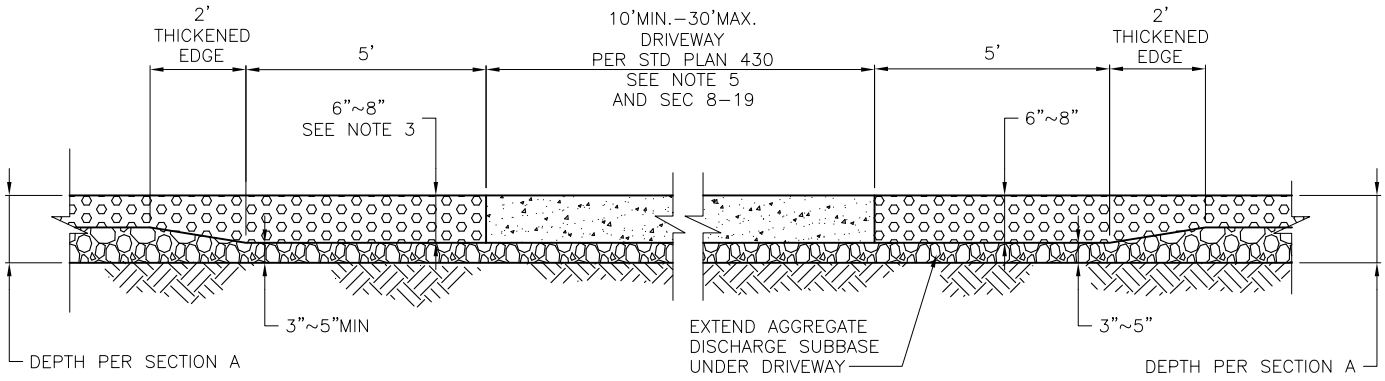

PERVIOUS CONC CEM SIDEWALK DEPTH TRANSITION AT DRIVEWAYS PROFILE VIEW

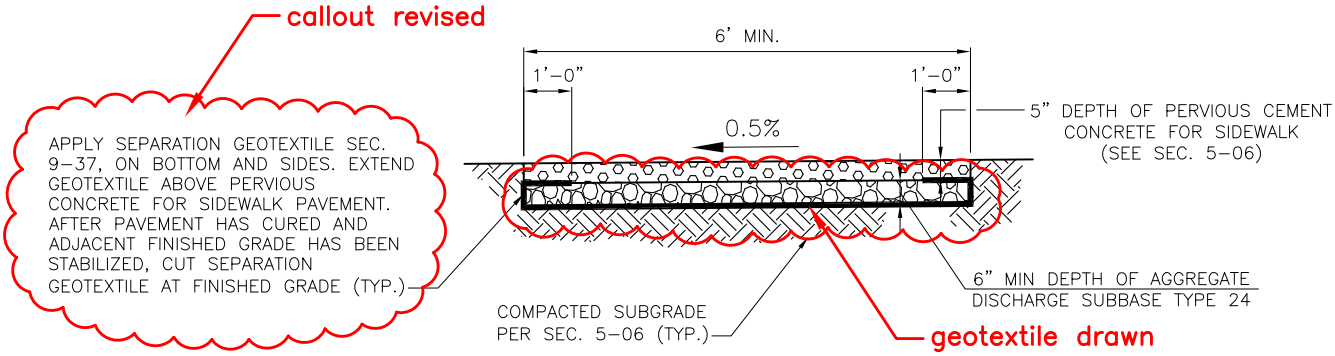

PERVIOUS CONC SECTION A

NOTES:

1. DEPTHS SHOWN FOR PAVEMENT SECTIONS ARE COMPACTED DEPTH.
2. SIDEWALK DEPTH AT DRIVEWAY TO MATCH DRIVEWAY PAVEMENT DEPTH.
3. DEPTH OF POROUS CEMENT CONCRETE FOR DRIVEWAYS SHALL BE 8" MIN.
4. 5% MAX. PERVIOUS CEMENT CONCRETE PROFILE GRADE.

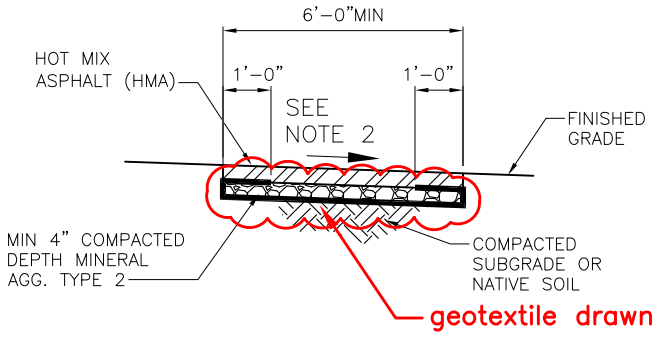

HOT MIX ASPHALT PAVEMENT SIDEWALK SECTION

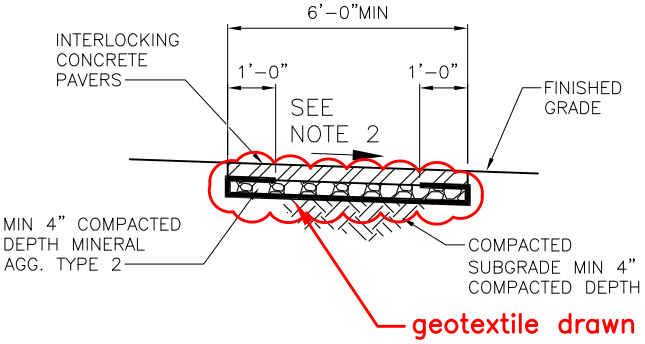

CONCRETE PAVER SIDEWALK SECTION

REF STD SPEC SEC 5-04, 5-06

City of Seattle	NOT TO SCALE	ALTERNATIVE WALKWAYS

REV DATE: DEC 2013

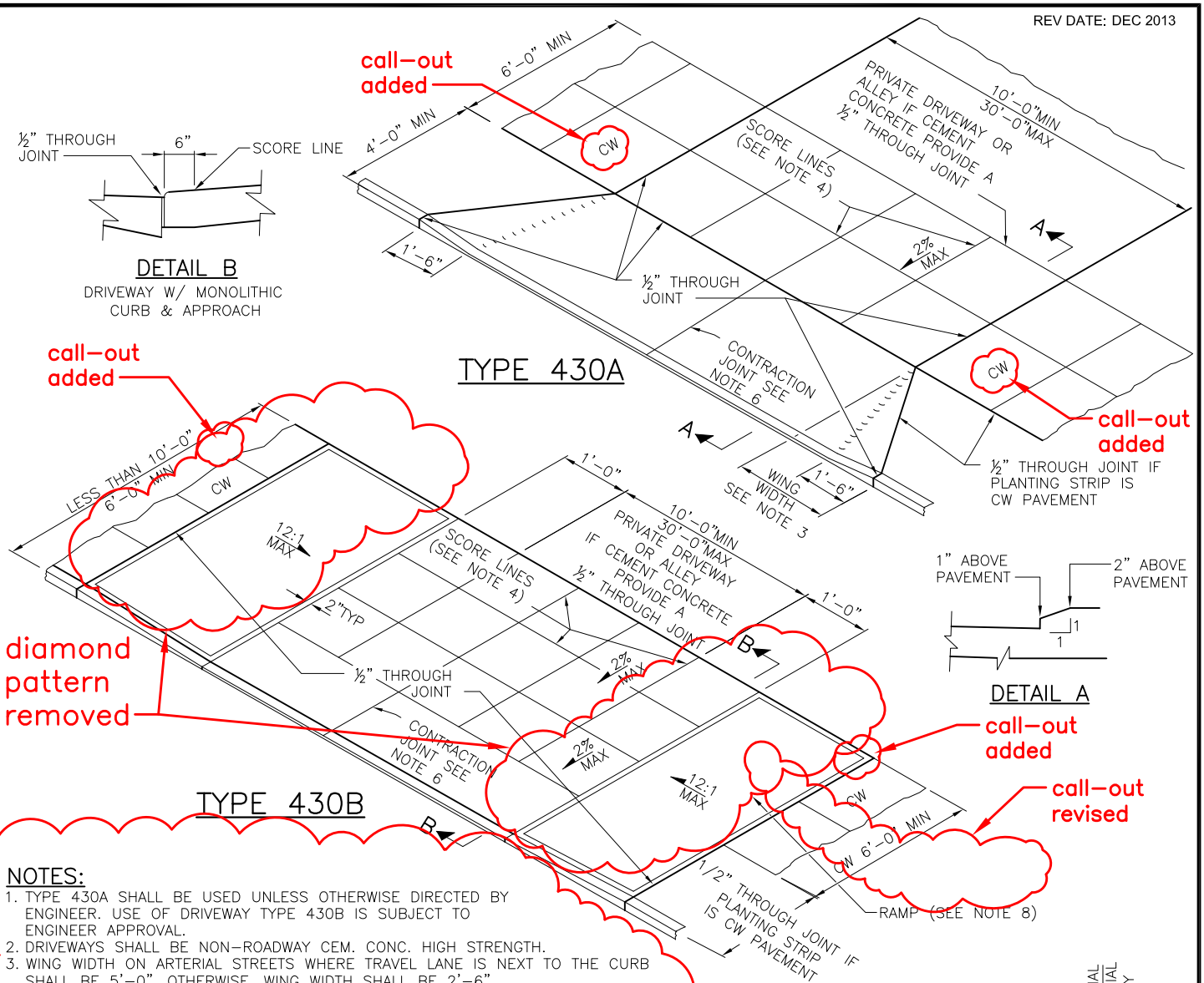

NOTES:

1. TYPE 430A SHALL BE USED UNLESS OTHERWISE DIRECTED BY ENGINEER. USE OF DRIVEWAY TYPE 430B IS SUBJECT TO ENGINEER APPROVAL.
2. DRIVEWAYS SHALL BE NON–ROADWAY CEM. CONC. HIGH STRENGTH.
3. WING WIDTH ON ARTERIAL STREETS WHERE TRAVEL LANE IS NEXT TO THE CURB SHALL BE 5'–0". OTHERWISE, WING WIDTH SHALL BE 2'–6".
4. "V" GROOVE SCORING SHALL MATCH PATTERN IN ADJACENT EXISTING SIDEWALK.
5. FOR CONCRETE DRIVEWAY CONSTRUCTED WITH CONCRETE SIDEWALK, SEE STANDARD PLAN NO 431.
6. CONCRETE DRIVEWAYS WITH A WIDTH GREATER THAN 15'–0" SHALL HAVE A ⅜" TRANSVERSE CONTRACTION JOINT NEAR THE CENTERLINE OF DRIVEWAY. SEE DETAIL SECTION C–C STANDARD PLAN NO 420.
7. FOR TYPE 430A SLOPE IN THE 6'–0" MINIMUM WIDE AREA CONNECTING TO CW ON EACH SIDE OF THE DRIVEWAY SHALL BE MAXIMUM 2% AND MINIMUM 0.5%. FOR TYPE 430B, SLOPE OF THE DRIVEWAY BETWEEN THE TWO RAMP SECTIONS SHALL BE MAXIMUM 2% AND MINIMUM 0.5%. DRIVEWAY ON THE PRIVATE SIDE OF THE CW MAY BE SLOPED AS NEEDED TO MATCH EXISTING SITE CONDITIONS.
8. RAMP SHALL HAVE A MAXIMUM SLOPE 12H:1V. AND A MINIMUM WIDTH OF 6'–0". THE CROSS SLOPE OF THE RAMP SHALL BE MAXIMUM OF 50H:1V. RAMP SURFACE SHALL HAVE A HEAVY BROOM BRUSHED SURFACE PERPENDICULAR TO THE CURB.
9. ALL CHANGES IN LEVEL ACROSS JOINTS SHALL BE FLUSH WITH A MAXIMUM DIFFERENCE IN ELEVATION OF 3/16 INCH.
10. ALL SLOPE GRADES SHALL BE MEASURED OFF THE HORIZON–LINE. IF EXISTING SITE CONDITIONS CONFLICT WITH OBTAINING GRADES SHOWN, THE CONTRACTOR SHALL MAKE MINIMUM ADJUSTMENTS TO THE GRADES TO ACCOMMODATE EXISTING SITE CONDITIONS, ADJUSTMENTS ARE SUBJECT TO ENGINEER APPROVAL.

notes revised

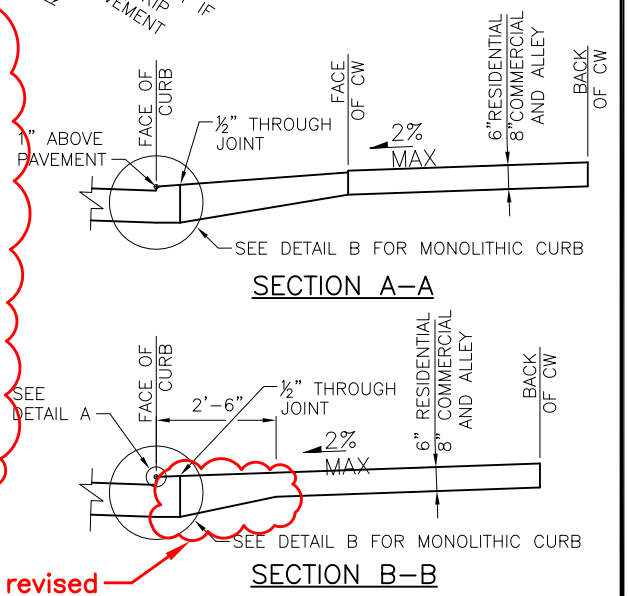

REF STD SPEC SEC 8-19

City of Seattle	NOT TO SCALE	TYPE 430 DRIVEWAY

REV DATE: APR 2011

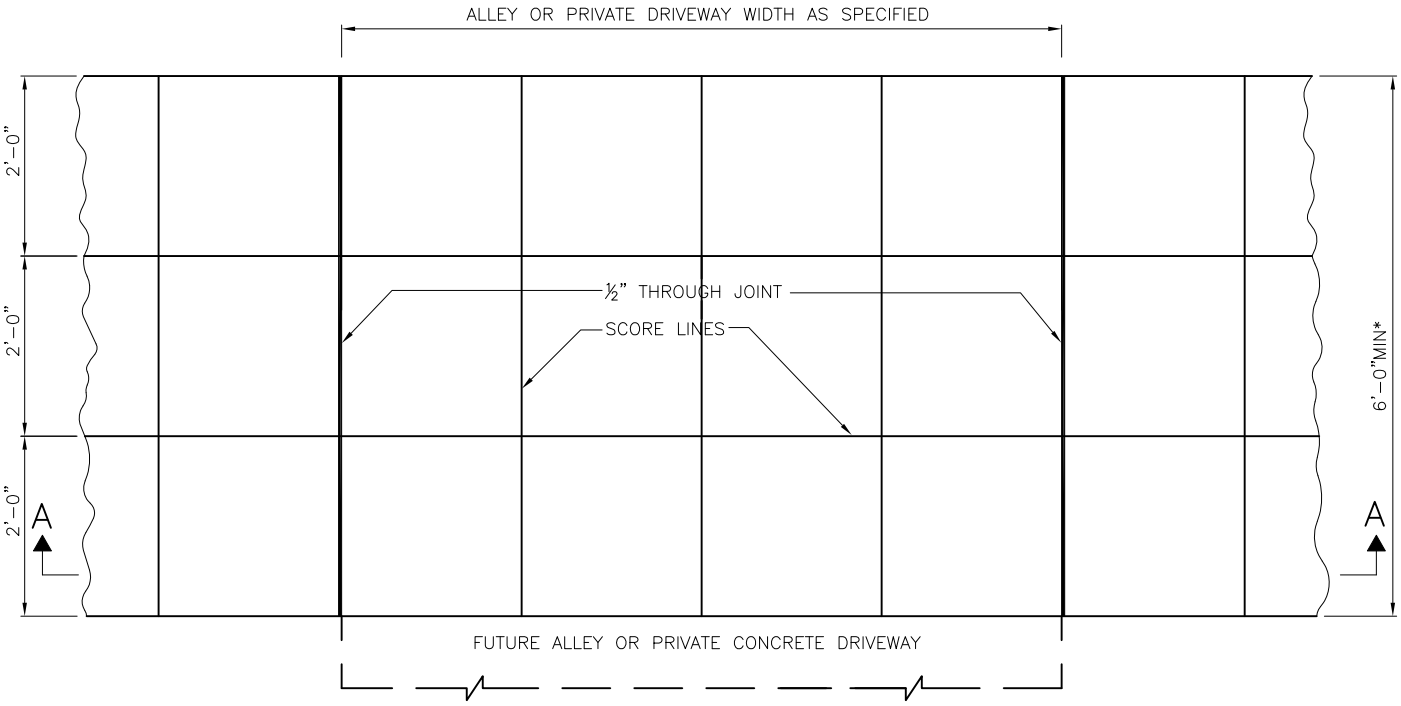

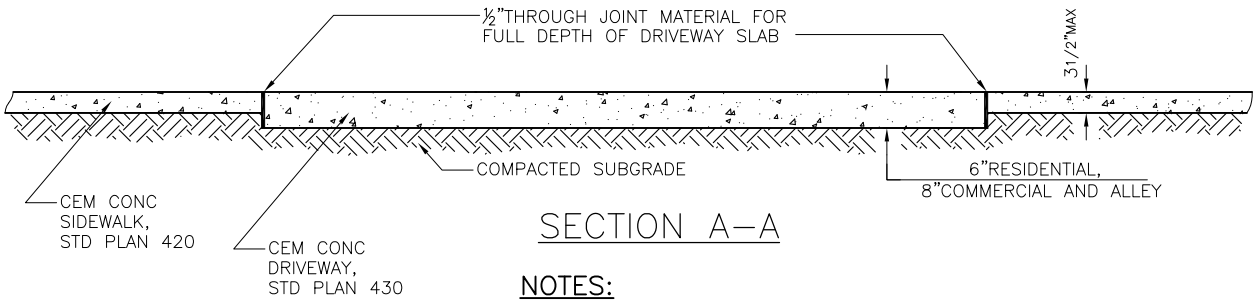

SECTION A–A

* UNLESS OTHERWISE APPROVED BY SDOT.

NOTES:

1. DRIVEWAY WIDTH GREATER THAN 15'–0" AND LESS THAN OR EQUAL TO 30' SHALL HAVE TRANSVERSE CONSTRUCTION JOINTS AT IT'S CENTER.
2. DRIVEWAY GREATER THAN 30'–0" REQUIRES SDOT APPROVAL AND SHALL HAVE TRANSVERSE CONTRACTION JOINTS EVENLY PLACED SO THE DISTANCE BETWEEN CONTRACTION JOINTS, OR BETWEEN THE EDGE THROUGH JOINTS AND CONTRACTION JOINTS IS NOT GREATER THAN 15'–0".
3. PROVIDE SCORE LINES PER STD PLAN 420 AND THE DRAWINGS.

note added

REF STD SPEC SEC 8-14 & 8-19

City of Seattle	NOT TO SCALE	CEMENT CONCRETE DRIVEWAY PLACED WITH CEMENT CONCRETE SIDEWALK

REV DATE: JUN 2013

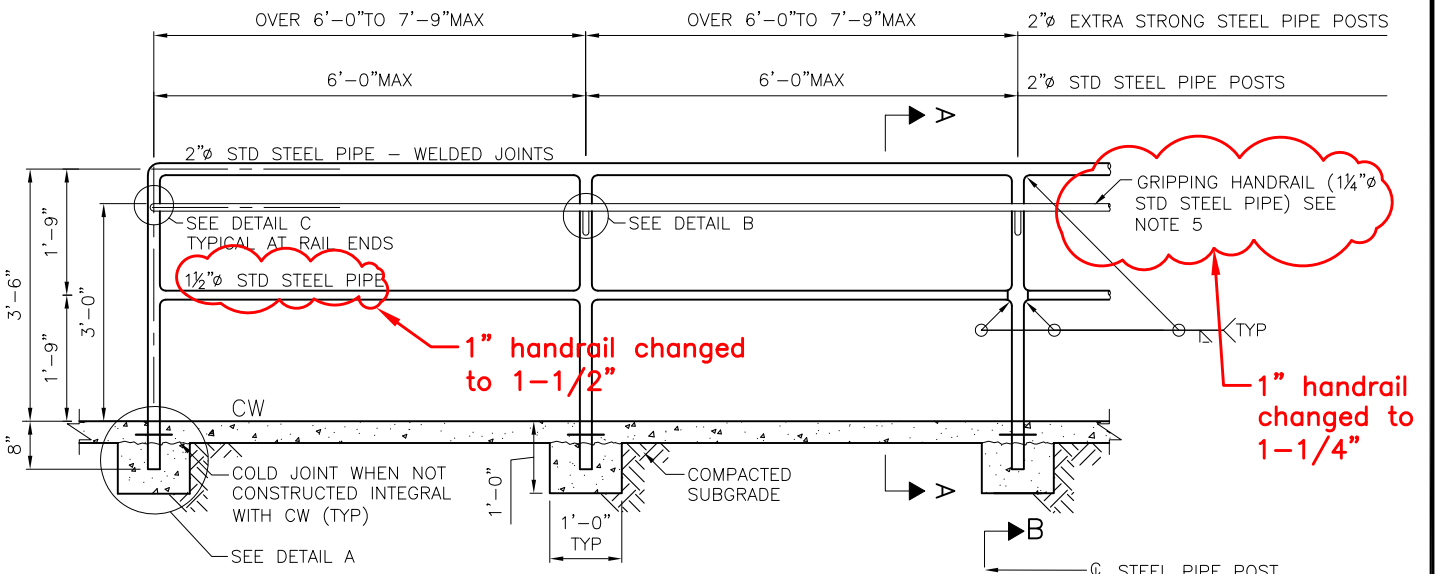

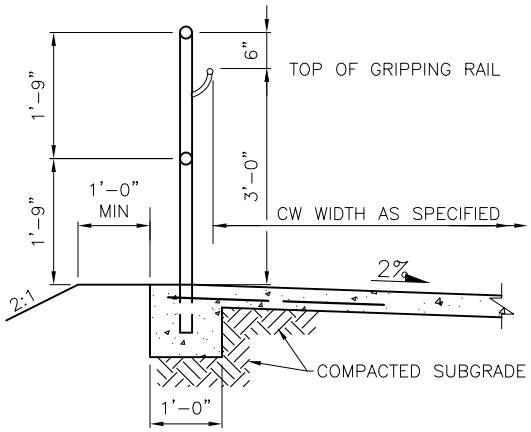

SECTION A–A

NOTES:

1. RAILING SHALL BE HOT DIP GALVANIZED AFTER FABRICATION
2. ALL POSTS SHALL BE PLUMB AND RAILS PARALLEL TO THE GROUND
3. PIPE MATERIAL SHALL CONFORM TO ASTM A 53
4. REINFORCING STEEL ASTM A 706 GR 60
5. IF THE CONCRETE WALK SLOPE IS 5% OR GREATER A GRIPPING HANDRAIL IS REQUIRED
6. PIPE DIAMETERS SHOWN ARE "NOMINAL" DIAMETERS AS GIVEN IN AMERICAN INSTITUTE OF STEEL CONSTRUCTION MANUAL

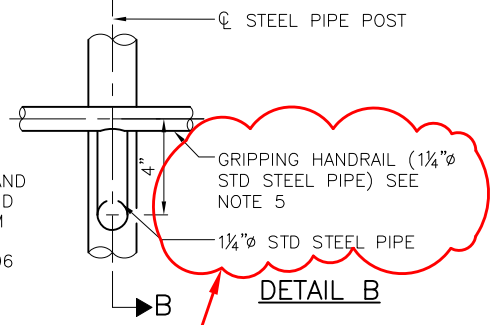

DETAIL B

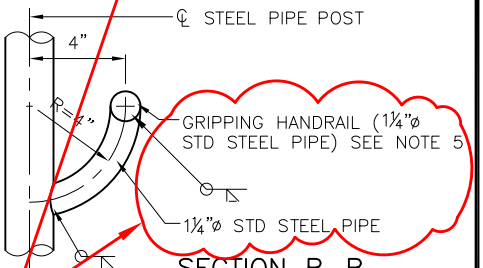

SECTION B–B

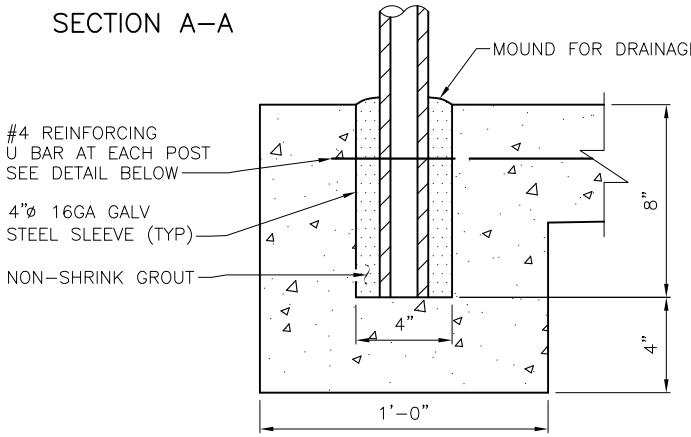

DETAIL A

1" handrail changed to 1-1/4"

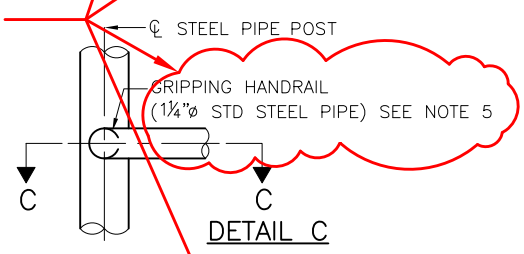

DETAIL C

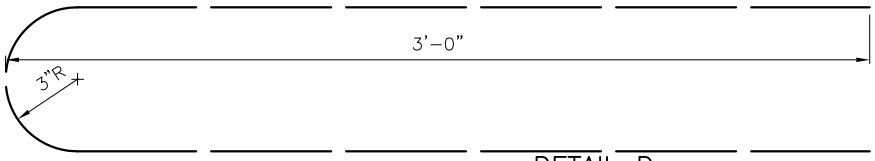

DETAIL D

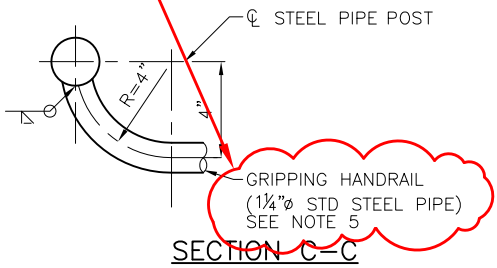

SECTION C–C

REF STD SPEC SEC 8-14 & 8-18

City of Seattle	NOT TO SCALE	STEEL PIPE HANDRAIL

REV DATE: DEC 2013

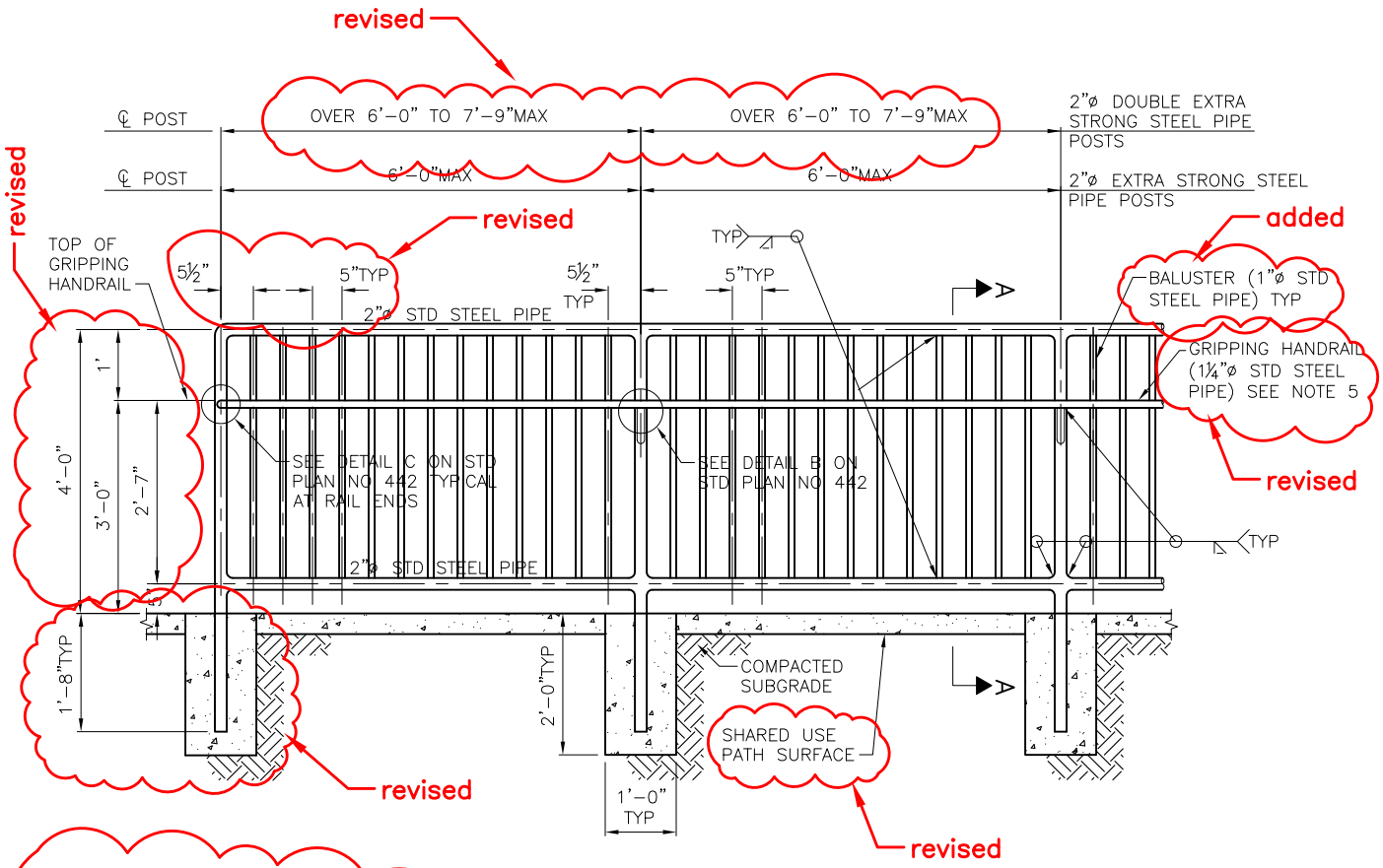

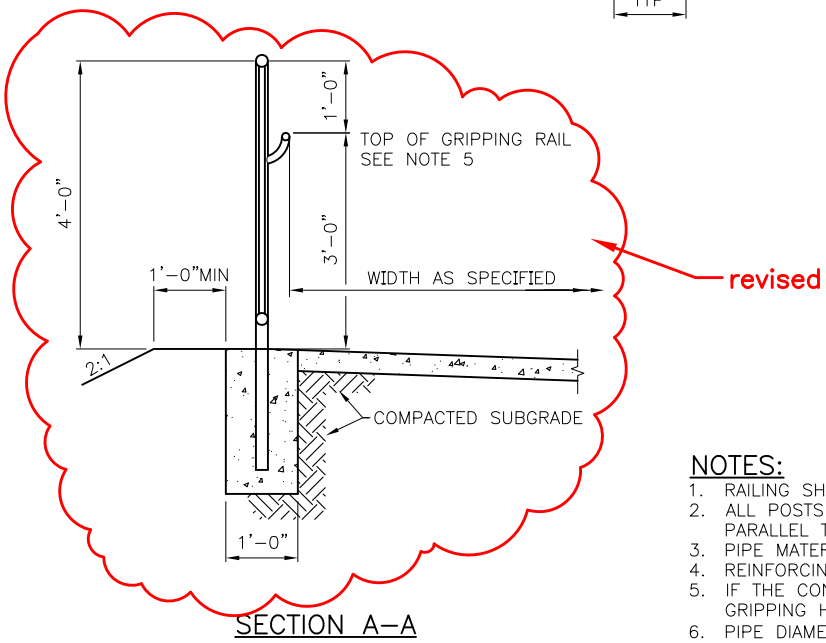

SECTION A–A

NOTES:

1. RAILING SHALL BE HOT DIP GALVANIZED AFTER FABRICATION
2. ALL POSTS AND BALUSTERS SHALL BE PLUMB AND RAILS PARALLEL TO GRADE
3. PIPE MATERIAL SHALL CONFORM TO ASTM A53
4. REINFORCING STEEL ASTM A706 GR 60
5. IF THE CONCRETE WALK SLOPE IS 5% OR GREATER A GRIPPING HANDRAIL IS REQUIRED
6. PIPE DIAMETERS SHOWN ARE "NOMINAL" DIAMETERS AS GIVEN IN AMERICAN INSTITUTE OF STEEL CONSTRUCTION MANUAL

title revised

REF STD SPEC SEC 8-18

City of Seattle	NOT TO SCALE	VERTICAL RAILING

REV DATE: SEPT 2013

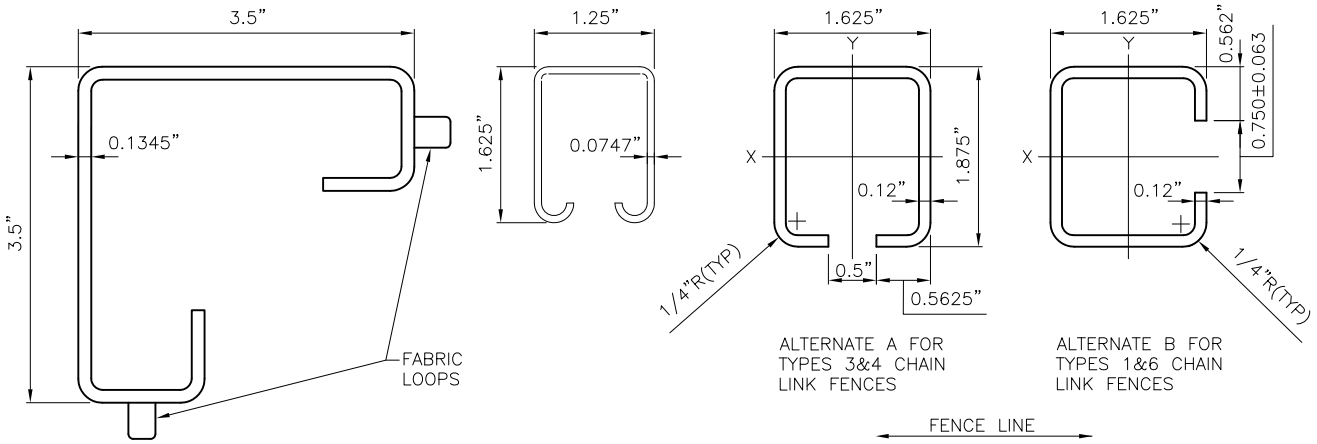

END, CORNER & PULL POST RAIL & BRACE LINE POST

ROLL FORMED SECTIONS

MEMBER

TYPE	BRACE RAIL & TOP RAIL						LINE & BRACE POST					
	ROUND		H-COLUMN		ROLL FORMED		ROUND		H-COLUMN		ROLL FORMED	
	ID PIPE INCHES	WEIGHT PER FT POUNDS	SIZE INCHES	WEIGHT PER FT POUNDS	SIZE INCHES	WEIGHT PER FT POUNDS	ID PIPE INCHES	WEIGHT PER FT POUNDS	SIZE INCHES	WEIGHT PER FT POUNDS	SIZE INCHES	WEIGHT PER FT POUNDS
1	1.25	2.27	1.25X1.62	1.35	1⅝X1¼	1.35	2	3.65	2¼	4.0		
3							1½	2.72	1⅞	2.72	1⅝X1⅞	2.34
4							1½	2.72	1⅞	2.72	1⅝X1⅞	2.34
6			1.25X1.62	1.35			2	3.65	2¼	4.0		

title changed

MEMBER

TYPE	END, CORNER & PULL POSTS				GATE POST ROUND		ALL POSTS
	ROUND		H-COLUMN				
	ID PIPE INCHES	WEIGHT PER FT POUNDS	SIZE INCHES	WEIGHT PER FT POUNDS	SIZE INCHES	WEIGHT PER FT POUNDS	LENGTH
1	2½	5.79	3½X3½	5.14	3½	9.1	8'-8"
3	2	3.65					8'-8"
4	2	3.65					5'-6"
6	2½	5.79					5'-6"

NOTES:

1. ALL CONCRETE POST BASES SHALL BE 10" MINIMUM DIAMETER, CL3000
2. POSTS SHALL BE SPACED AT 10'-0" MAXIMUM INTERVALS UNLESS OTHERWISE DIRECTED BY THE ENGINEER
3. TOP OR BOTTOM TENSION WIRES SHALL BE PLACED WITHIN THE LIMITS OF THE FIRST FULL FABRIC WEAVE
4. THE ILLUSTRATIVE DETAIL SHOWN HEREON SHALL NOT BE CONSTRUED AS LIMITING TO HARDWARE DESIGN OR POST SELECTION FOR ANY PARTICULAR FENCE TYPE
5. CONCRETE OR GROUT AROUND POST AT GROUND LINE SHALL BE MOUNDED FOR DRAINAGE

REF STD SPEC SEC 8-12

City of Seattle	NOT TO SCALE	CHAIN LINK FENCE