60%SIP Approval Review Groups	Name	Date
King County Metro		
Neighborhood Traffic		
Parks		
Pavement Management		
Ped & Bike		
Roadway Structures		
SCL Engineering (PRT)		
SCL Street Lighting		
Signal Operations		
Signal Operations Inspection		
SIP Project Manager		
SPU Real Estate Services		
SPU Sewer/Drainage		
SPU Water		
Street Lighting and Signal Design		
Traffic Operations		
Urban Forestry		

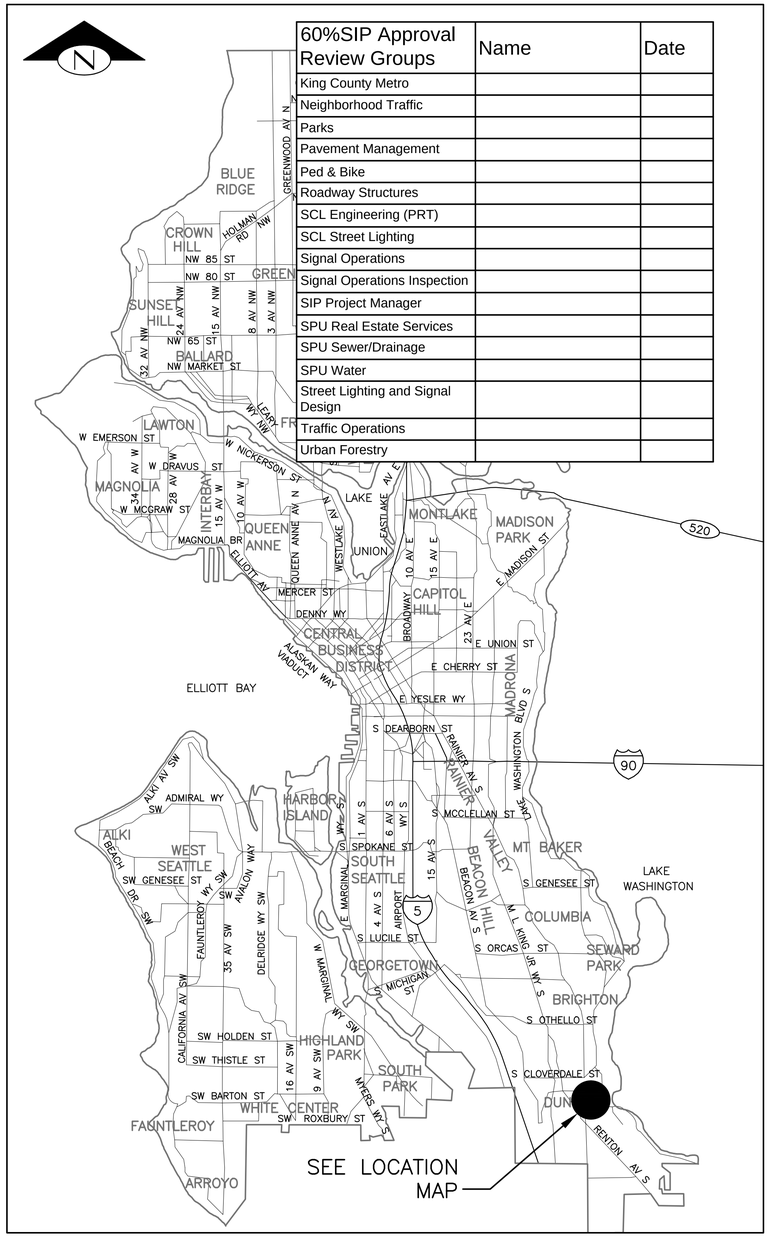

VICINITY MAP

1 0 1 2

SCALE: 1" = 1 MILE

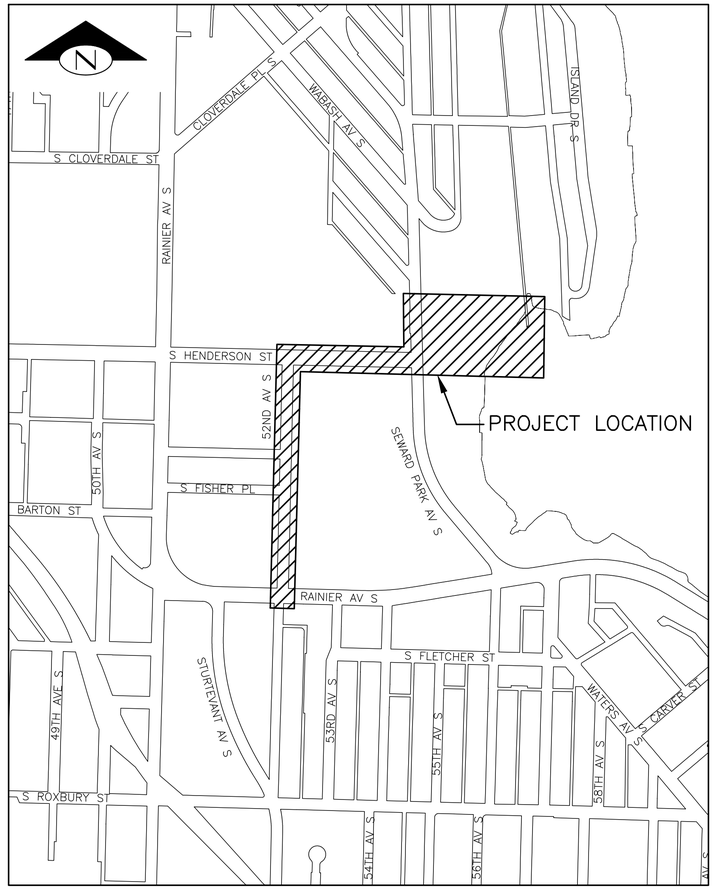

LOCATION MAP

SCALE: 1" = 400'

DETAIL AND SECTION REFERENCING

4/9 — DETAIL REFERENCE NUMBER / SHEET ON WHICH DETAIL APPEARS

(TITLE) (SCALE) 4/9 — DETAIL REFERENCE NUMBER / SHEET FROM WHICH DETAIL WAS TAKEN

("TYP" SPECIFIES THAT DETAIL IS UNIFORMLY TYPICAL THROUGHOUT PROJECT EXCEPT WHERE OTHERWISE NOTED.)
("VAR" SPECIFIES THAT DETAIL WAS TAKEN FROM SEVERAL SHEETS.)

A A 32 — SECTION A–A IS SHOWN ON SHEET 32.

SECTION A–A 30 — SECTION A–A IS TAKEN FROM SHEET 30.

SHEET INDEX

SHT NO.	DESCRIPTION
1	VICINITY MAP, LOCATION MAP, DETAIL & SECTION REFERENCING, AND SHEET INDEX
2	NOTES
3	SURVEY CONTROL PLAN
4	TESC, REMOVAL & PROTECTION (1 OF 2)
5	TESC, REMOVAL & PROTECTION (2 OF 2)
6	TESC DETAILS
7	CSO PLAN & PROFILE (1 OF 4)
8	CSO PLAN & PROFILE (2 OF 4)
9	CSO PLAN & PROFILE (3 OF 4)
10	CSO PLAN & PROFILE (4 OF 4)
11	STORMWATER PLAN & PROFILE (1 OF 4)
12	STORMWATER PLAN & PROFILE (2 OF 4)
13	STORMWATER PLAN & PROFILE (3 OF 4)
14	STORMWATER PLAN & PROFILE (4 OF 4)
15	BIORETENTION PLAN & DETAILS
16	S HENDERSON ST GRADING SECTIONS
17	52ND AVE S GRADING SECTION
18	PSD CONNECTION DETAIL
19	WATER MAIN PLAN
20	PAVING RESTORATION PLAN (1 OF 4)
21	PAVING RESTORATION PLAN (2 OF 4)
22	PAVING RESTORATION PLAN (3 OF 4)
23	PAVING RESTORATION PLAN (4 OF 4)
24	PAVING DETAILS (1 OF 2)
25	PAVING DETAILS (2 OF 2)
26	BEER SHEVA PARK SITE LAYOUT
27	CREEK TESC, DEMOLITION, REMOVAL & PROTECTION
28	CREEK GRADING PLAN
29	CREEK DETAILS (1 OF 2)
30	CREEK DETAILS (2 OF 2)
31	CREEK UTILITY PLAN
32	CREEK PLANT SCHEDULE
33	CREEK RESTORATON PLAN
34	CREEK RESTORATION DETAILS
35	IRRIGATION DRAFT ZONING PLAN
36	STRUCTURAL PLAN
37	STRUCTURAL DETAILS
38	PLANTING PLAN (1 OF 2)
39	PLANTING PLAN ENLARGEMENTS
40	PLANTING PLAN (2 OF 2)
41	PLANTING SCHEDULE, ABBREVIATIONS, NOTES & LEGEND
42	PLANTING DETAILS (1 OF 2)
43	PLANTING DETAILS (2 OF 2)
44	IRRIGATION PLAN (1 OF 2)
45	EXISTING IRRIGATION PLAN
46	IRRIGATION PLAN (2 OF 2)
47	IRRIGATION LEGEND, SCHEDULE, NOTES, ABBREVIATIONS & DETAILS
48	ELECTRICAL LEGENDS, SYMBOLS & ABBREVIATIONS
49	ELECTRICAL SITE PLAN
50	ELECTRICAL STANDARD & ROADSIDE CABINET ELEVATION DETAILS
51	P&ID, CONTROL PANEL BLOCK & ONE–LINE DIAGRAM
52	ELECTRICAL SITE PLAN
53	ROADSIDE CABINET ELEVATION DETAIL

60% COMPLETE SIP
(NOT FOR CONSTRUCTION)

VICINITY MAP, LOCATION MAP, DETAIL & SECTION REFERENCING, AND SHEET INDEX

APPROVED FOR ADVERTISING
NANCY LOCKE
DEPARTMENT OF FINANCE & ADMINISTRATIVE SERVICES
SEATTLE, WASHINGTON 20

BY:
PURCHASING & CONTRACTING SERVICES DIRECTOR

NAME OR INITIALS AND DATE
DESIGNED
CHECKED
DRAWN
CHECKED

INITIALS AND DATE
REVIEWED:
DES. CONST.
SDOT PROJ. MGR.
RECEIVED
REVISED AS BUILT

ALL WORK SHALL BE DONE IN ACCORDANCE WITH THE CITY OF SEATTLE STANDARD PLANS AND SPECIFICATIONS AND OTHER DOCUMENTS CALLED FOR IN SECTION 0–02.3 OF THE PROJECT MANUAL.

PATRICK J. MURPHY — STATE OF WASHINGTON — 27456 — REGISTERED PROFESSIONAL ENGINEER

Seattle Public Utilities
City of Seattle
Ray Hoffman, Director

ORDINANCE NO.
FUND:
SCALE: AS NOTED
APPROVED
INSPECTOR'S BOOK

52ND AVE S CSO REDUCTION & LOWER MAPES CREEK RESTORATION

JOB NO. PC C311054 R/W CO
VAULT PLAN NO. 774–889
SHEET 1 OF 53

REV'D	CHK'D	MADE	NATURE REVISIONS	DATE	MARK

VAULT SERIAL NO. 35668

P:\Project\C311054–Lower Mapes Creek Restoration\04–Design\A–Plot_Files\ C311054–P–Cover.dwg
jonesjc Sep–06–12 3:04pm

GENERAL NOTES

UNLESS OTHERWISE NOTED:

1. ALL WORK SHALL CONFORM TO THE 2011 EDITION OF CITY OF SEATTLE STANDARD SPECIFICATIONS, THE 2011 EDITION OF THE CITY OF SEATTLE STANDARD PLANS; AND SEATTLE DEPARTMENT OF TRANSPORTATION DIRECTOR'S RULE 05–2009 FOR STREET AND SIDEWALK PAVEMENT OPENING AND RESTORATION. A COPY OF THESE DOCUMENTS SHALL BE ON SITE DURING CONSTRUCTION.
2. A COPY OF THE APPROVED PLANS AND PERMITS MUST BE ON SITE WHENEVER CONSTRUCTION IS IN PROGRESS.
3. ERRORS AND OMISSIONS ON THE PERMITTED PLANS MUST BE CORRECTED BY THE ENGINEER AND APPROVED BY THE CITY OF SEATTLE.
4. ALL PERMITS REQUIRED FOR WORK WITHIN THE PUBLIC RIGHT OF WAY MUST BE OBTAINED PRIOR TO THE START OF CONSTRUCTION.
5. THE APPROVED PLANS SHOW THE APPROXIMATE AREA OF PAVEMENT RESTORATION BASED ON THE DEPTH OF UTILITY CUTS AND/OR THE AREA OF CURB AND/OR PAVEMENT TO BE REMOVED AND REPLACED. THE ACTUAL LIMITS OF THE PAVEMENT RESTORATION SHALL BE PER THE STREET AND SIDEWALK PAVEMENT OPENING AND RESTORATION DIRECTOR'S RULE 05–2009 AND WILL BE DETERMINED IN THE FIELD BY THE ENGINEER.
6. THE CONTRACTOR SHALL BE RESPONSIBLE FOR REFERENCING AND REPLACING ALL MONUMENTS THAT MAY BE DISTURBED, DESTROYED OR REMOVED BY THE PROJECT AND SHALL FILE AN APPLICATION FOR PERMIT TO REMOVE OR DESTROY A SURVEY MONUMENT WITH THE WASHINGTON STATE DEPARTMENT OF NATURAL RESOURCES, PURSUANT TO RCW 58.24.040(8).
7. THE CONTRACTOR SHALL SUBMIT ALL APPLICABLE DOCUMENTS REQUIRED UNDER SECTION 1–05.3 OF THE STANDARD SPECIFICATIONS PRIOR TO CONSTRUCTION. A MATERIAL SOURCE FORM FOR ALL MATERIALS AND MIX DESIGNS FOR ALL ASPHALT, CONCRETE AND AGGREGATES MUST BE SUBMITTED FOR REVIEW AND APPROVAL PRIOR TO BEGINNING CONSTRUCTION. A REVISED MATERIAL SOURCE FORM AND MIX DESIGNS MUST BE SUBMITTED FOR REVIEW AND APPROVAL PRIOR TO PLACEMENT OF ANY SUBSTITUTE MATERIALS.
8. THE CONTRACTOR SHALL NOTIFY THE SEATTLE FIRE DEPARTMENT DISPATCHER (206–386–1495) AT LEAST TWENTY–FOUR (24) HOURS IN ADVANCE OF ALL WATER SERVICE INTERRUPTIONS, HYDRANT SHUTOFFS, AND STREET CLOSURES OR OTHER ACCESS BLOCKAGE. THE PERMITTEE SHALL ALSO NOTIFY THE DISPATCHER OF ALL NEW, RELOCATED, OR ELIMINATED HYDRANTS RESULTING FROM THIS WORK.
9. THE CONTRACTOR SHALL LOCATE AND PROTECT ALL CASTINGS AND UTILITIES DURING CONSTRUCTION.
10. THE CONTRACTOR SHALL CONTACT THE UNDERGROUND UTILITIES LOCATOR SERVICE (1–800–424–5555) AT LEAST 48 HOURS PRIOR TO CONSTRUCTION.
11. IT IS THE SOLE RESPONSIBILITY OF THE CONTRACTOR TO VERIFY THE ACCURACY OF ALL UTILITY LOCATIONS SHOWN AND TO FURTHER DISCOVER AND AVOID ANY OTHER UTILITIES NOT SHOWN WHICH MAY BE AFFECTED BY THE IMPLEMENTATION OF THIS PLAN.
12. THE CONTRACTOR SHALL ADJUST ALL EXISTING MANHOLE RIMS, DRAINAGE STRUCTURE LIDS, VALVE BOXES, AND UTILITY ACCESS STRUCTURES TO FINISH GRADE WITHIN AREAS AFFECTED BY THE PROPOSED IMPROVEMENTS.
13. CONTRACTORS ARE NOT ALLOWED TO CORE INTO MAINS OR STRUCTURES WITHOUT PRIOR APPROVAL FROM SPU. TO SCHEDULE CORE TAPS, CONTACT SPU AT 206–615–0511 A MINIMUM OF 48 HOURS IN ADVANCE. SPU SHALL BE ON SITE PRIOR TO THE START OF CONTRACTOR PERFORMED CORE TAP. CONTRACTORS PERFORMING CORE TAPS SHALL PROVIDE THE COUPON OF REMOVED MATERIAL TO SPU.
14. UTILITY SERVICE CONNECTIONS SHOWN ON THIS PLAN REQUIRE SEPARATE PERMITS AND ARE TO BE MAINTAINED PRIVATELY AND NOT BY THE CITY OF SEATTLE.
15. BACKFILL MATERIAL USED SHALL MEET STANDARD SPECIFICATIONS AND SHALL BE APPROVED BY THE ENGINEER PRIOR TO PLACEMENT.
16. THE CONTRACTOR SHALL PROVIDE AND MAINTAIN TEMPORARY EROSION CONTROL AND SEDIMENTATION COLLECTION FACILITIES TO ENSURE THAT SEDIMENT–LADEN WATER DOES NOT ENTER THE NATURAL OR PUBLIC DRAINAGE SYSTEM PER SECTION 8–01. AS CONSTRUCTION PROGRESSES AND UNEXPECTED (SEASONAL) CONDITIONS DICTATE, ADDITIONAL CONTROL FACILITIES MAY BE REQUIRED. DURING THE COURSE OF CONSTRUCTION IT SHALL BE THE OBLIGATION AND RESPONSIBILITY OF THE CONTRACTOR TO ADDRESS ANY NEW CONDITIONS THAT MAY BE CREATED BY THE CONTRACTOR'S ACTIVITIES AND TO PROVIDE ADDITIONAL FACILITIES THAT MAY BE NEEDED TO PROTECT ADJACENT PROPERTIES.
17. THE CONTRACTOR SHALL KEEP ALL PAVED SURFACES IN THE RIGHT OF WAY CLEAN BY SWEEPING PER SECTION 8–01.3(16).
18. ALL DISTURBED SOILS MUST BE AMENDED PER STANDARD PLAN 142 AND SECTION 8–02 OF THE STANDARD SPECIFICATIONS UNLESS WITHIN ONE FOOT OF A CURB OR SIDEWALK, THREE FEET OF A UTILITY STRUCTURE (E.G. WATER METER, UTILITY POLE, HAND HOLE, ETC.), OR THE DRIPLINE OF AN EXISTING TREE.
19. ALL TRAFFIC CONTROL SHALL BE IN ACCORDANCE WITH THE CITY OF SEATTLE TRAFFIC CONTROL MANUAL FOR IN–STREET WORK. AN APPROVED TRAFFIC CONTROL PLAN WILL BE REQUIRED FOR ALL ARTERIAL STREETS PRIOR TO BEGINNING CONSTRUCTION.
20. CONTRACTOR SHALL NOTIFY KING COUNTY METRO AT 684–2732 FOURTEEN DAYS IN ADVANCE OF ANY IMPACT TO TRANSIT OPERATIONS.
21. COORDINATE SIGN AND PAY STATION AND/OR PARKING METER HEAD REMOVAL AND INSTALLATION WITH SEATTLE DEPARTMENT OF TRANSPORTATION AT 684–5370. SIGNPOSTS ARE TO BE INSTALLED IN ACCORDANCE WITH STANDARD PLANS 616, 620, 621A, 621B, 625, & 626.
22. ALL STREET NAME SIGNS MUST BE INSTALLED BY SEATTLE DEPARTMENT OF TRANSPORTATION.
23. CONTRACTOR SHALL CONTACT SEATTLE DEPARTMENT OF TRANSPORTATION, STREET USE INSPECTOR A MINIMUM OF 2 BUSINESS DAYS PRIOR TO PLANTING FOR INSPECTION OF STREET TREES AND LANDSCAPING.
24. PERMITTEE SHALL CONTACT SEATTLE DEPARTMENT OF TRANSPORTATION, URBAN FORESTRY OFFICE AT (206) 684–5693 FOR APPROVAL OF STREET TREE SPECIES SUBSTITUTIONS.
25. THE CONTRACTOR SHALL CONTACT SEATTLE DEPARTMENT OF TRANSPORTATION, URBAN FORESTRY OFFICE AT (206) 684–5693 FOR INSPECTION OF STREET TREES AND LANDSCAPING TWO DAYS PRIOR TO PLANTING IN THE RIGHT OF WAY.
26. ALL EXCAVATIONS ADJACENT TO CITY LIGHT POLES OR OTHER INSTALLATIONS SHALL COMPLY WITH THE WASHINGTON ADMINISTRATION CODE (WAC) SAFETY STANDARDS FOR CONSTRUCTION WORK, PART "N".
27. SITE SAFETY PROCEDURES AND EXCAVATION PROTECTIVE SYSTEMS SHALL SPECIFICALLY COMPLY WITH WAC 296–155–650, EXCAVATION, TRENCHING AND SHORING.
28. 26KV HIGH VOLTAGE LINES IN THE VICINITY. STATE LAW REQUIRES CONSTRUCTION WORKERS, THEIR TOOLS, MACHINERY, EQUIPMENT AND MATERIALS TO MAINTAIN 10–FEET CLEARANCE FROM POWER LINES. FOR CRANES AND DERRICKS THE MINIMUM CLEARANCE IS 20–FEET DURING CONSTRUCTION. REVIEW WAC 296–24–960. TRANSMISSION LINES REQUIRE GREATER CLEARANCE. TO WORK NEAR POWER LINES, NOTIFY SEATTLE CITY LIGHT (SCL) WELL IN ADVANCE TO DE–ENERGIZE AND GROUND THE LINES, OR RELOCATE THE LINES TEMPORARILY. ALL SCL WORK IS DONE AT THE CUSTOMER'S EXPENSE.
29. CONTACT SCL CUSTOMER SERVICE REPRESENTATIVE, KAREN QUAIFE AT 206–684–4983 WITH QUESTIONS, COORDINATION OF SCL WORK AND TO SCHEDULE INSPECTIONS.

MAINLINE CONVEYANCE NOTES

UNLESS OTHERWISE NOTED:

1. MAINLINE PIPE, AND CULVERT PIPE SHALL BE AS APPROVED BY SEATTLE PUBLIC UTILITIES (SPU) AND AS SHOWN ON THE PROFILE.

A) DIP SHALL BE PER SPECIFICATION 9–05.2 EXCEPT THAT IT SHALL BE CLASS 52. FITTINGS SHALL BE CEMENT MORTAR LINED DUCTILE IRON. JOINTS SHALL BE RUBBER GASKET, PUSH–ON OR MECHANICAL.

2. BEDDING SHALL BE CLASS D FOR DUCTILE IRON PIPE SEE STANDARD PLAN NO. 285 AND SPECIFICATION 7–17.3(1)B. CONTROLLED DENSITY FILL (CDF) OR CEMENT CONCRETE SHALL NOT BE IN CONTACT W THE PIPE. BEDDING MATERIAL SHALL BE SELECT NATIVE OR MINERAL AGGREGATE TYPE 9 OR MINERAL AGGREGATE TYPE 22.
3. TEES ON NEW PIPE LESS THAN 24" IN DIAMETER SHALL BE PREFABRICATED. ALL NEW CONNECTIONS TO EXISTING MAINLINES OR STRUCTURES, OR CONNECTIONS TO MAINLINES WITHOUT PREFABRICATED TEES, SHALL BE PER SPU CORE TAP PROCEDURES.
4. ALL PIPELINES AND APPURTENANCES SHALL BE CLEANED AND TESTED AFTER BACKFILLING PER SPECIFICATION 7–17.3(4). DEFLECTION TESTING OF FLEXIBLE PIPE SHALL BE NO LESS THAN 30 DAYS AFTER BACKFILL AND PRIOR TO PAVING PER SPECIFICATION 7–17.3(4)H. TELEVISION INSPECTION OF MAINLINE SHALL BE PER SPECIFICATION 7–17.3(4)I.
5. WHERE A NEW PIPE CLEARS AN EXISTING OR NEW UTILITY BY 6" OR LESS, POLYETHYLENE PLASTIC FOAM SHALL BE PLACED AS A CUSHION BETWEEN THE UTILITIES PER SPECIFICATION 1–07.17(2).
6. PIPE 12" DIAMETER AND LARGER TO BE ABANDONED SHALL BE FILLED WITH PORTLAND CEMENT AND SAND MIXTURE. SEE SPECIFICATION 2–02.3(5).

DRAINAGE CB & INLET NOTES

UNLESS OTHERWISE NOTED:

1. CATCH BASIN CONNECTIONS AND INLET CONNECTIONS SHALL BE 8" DIAMETER. PIPE SHALL BE CEMENT MORTAR LINED DUCTILE IRON CLASS 50 (MIN) PER SPECIFICATION 9–05.2. FITTINGS SHALL BE CEMENT MORTAR LINED DUCTILE IRON. JOINTS SHALL BE RUBBER GASKET, PUSH–ON OR MECHANICAL.
2. BEDDING SHALL BE CLASS D WITH SELECT NATIVE MATERIAL.
3. CATCH BASIN CONNECTIONS SHALL BE PLACED AT A MINIMUM SLOPE OF 2% AND A MAXIMUM SLOPE OF 100% PER STANDARD PLAN NO. 261 AND SPECIFICATION 7–08.3(4).
4. INLET CONNECTIONS SHALL BE PLACED AT A MINIMUM SLOPE OF 5% AND A MAXIMUM SLOPE OF 50% PER SPECIFICATION 7–08.3(5).
5. CATCH BASINS AND INLETS SHALL BE LOCATED PER STANDARD PLAN NO. 260A AND 260B.
6. TELEVISION INSPECTION OF CATCH BASIN CONNECTIONS SHALL BE PER SPECIFICATION 7–17.3(4)I.

SIDE SEWER NOTES

UNLESS OTHERWISE NOTED:

1. ALL WORK SHALL CONFORM TO THE DEPARTMENT OF PLANNING AND DEVELOPMENT (DPD) DIRECTOR'S RULE 4–2011, REQUIREMENTS FOR DESIGN AND CONSTRUCTION OF SIDE SEWERS.
2. THE PERMITTEE SHALL MAINTAIN DRAINAGE AND SEWER SERVICE TO PRIVATE PROPERTY DURING CONSTRUCTION.
3. RELAY OR REPAIR OF SERVICE DRAINS/SIDE SEWERS NOT SHOWN FOR CONSTRUCTION ON THE APPROVED PLAN SHALL BE UNDER SEPARATE PERMIT FROM DPD.
4. WHEN SHOWN ON THE APPROVED PLAN, RELAY EXISTING SERVICE DRAINS/SIDE SEWERS TO CLEAR OVER OR UNDER THE NEW UTILITY AND RECONNECT WITH SHIELDED FLEXIBLE REPAIR COUPLINGS PER SPECIFICATION 7–17.3(2)F AND AS APPROVED BY A REPRESENTATIVE OF THE CITY OF SEATTLE.
5. SERVICE DRAIN/SIDE SEWER PIPE SHALL BE OF A MATERIAL APPROVED BY A REPRESENTATIVE OF THE CITY OF SEATTLE, FROM THE FOLLOWING, IN ORDER OF PRECEDENCE:

   DIP WHEN MINIMUM CLEARANCES REQUIRED IN SPECIFICATION 1–07.17(2) ARE NOT MET. DIP SHALL BE CEMENT MORTAR LINED DUCTILE IRON PIPE PER SPECIFICATION 9–05.2. JOINTS SHALL BE RUBBER GASKET, PUSH–ON OR MECHANICAL. BEDDING SHALL BE CLASS D PER SPECIFICATION 7–17.3(1)B5.

   MATCH EXISTING PIPE MATERIAL AND BEDDING SHALL BE PER SPECIFICATION 7–17.3(1)B FOR EACH PIPE MATERIAL.

   PVC PIPE AND FITTINGS SHALL BE PER ASTM D 3034, SDR35 (MIN), WITH RUBBER GASKET JOINTS OR SCHEDULE 40 PER ASTM D1785 WITH SOLVENT WELDED JOINTS. BEDDING SHALL BE CLASS B PER SPECIFICATION 7–17.3(1)B3. BEDDING SHALL BE CLASS B, EXCEPT DIP, WHICH MAY BE CLASS D. BEDDING MATERIAL SHALL BE MINERAL AGGREGATE TYPE 22, EXCEPT MINERAL AGGREGATE TYPE 9 MAY BE USED TO BED CONCRETE OR DIP AND SELECT NATIVE MAY BE USED TO BED DIP.

SERVICE DRAINS/SIDE SEWERS SHALL NOT BE BACKFILLED UNTIL THE PIPE HAS BEEN INSPECTED AND APPROVED AND THE SLOPE, LOCATION AND DEPTH IS RECORDED. THE PERMITTEE IS RESPONSIBLE FOR AS–BUILT RECORD INFORMATION FOR ALL WORK ON SERVICE DRAINS/SIDE SEWERS.

60% COMPLETE SIP
(NOT FOR CONSTRUCTION)

NOTES

NO.	NATURE REVISIONS	MADE	CHK'D	REV'D

MARK	DATE	NAME OR INITIALS AND DATE	INITIALS AND DATE
		DESIGNED	REVIEWED:
		CHECKED	DES. CONST.
			SDOT PROJ. MGR.
		DRAWN	RECEIVED
		CHECKED	REVISED AS BUILT

ALL WORK SHALL BE DONE IN ACCORDANCE WITH THE CITY OF SEATTLE STANDARD PLANS AND SPECIFICATIONS AND OTHER DOCUMENTS CALLED FOR IN SECTION 0–02.3 OF THE PROJECT MANUAL.

APPROVED FOR ADVERTISING
NANCY LOCKE
DEPARTMENT OF FINANCE & ADMINISTRATIVE SERVICES
SEATTLE, WASHINGTON 20

BY:
PURCHASING & CONTRACTING SERVICES DIRECTOR

PATRICK J. MURRAY — STATE OF WASHINGTON — 27456 — REGISTERED PROFESSIONAL ENGINEER

Seattle Public Utilities

City of Seattle
Ray Hoffman, Director

ORDINANCE NO.
FUND:
SCALE: NONE

APPROVED
INSPECTOR'S BOOK

52ND AVE S CSO REDUCTION & LOWER MAPES CREEK RESTORATION

JOB NO. PC C311054 R/W CO
VAULT PLAN NO. 774–889
SHEET 2 OF 53

VAULT SERIAL NO. 35668

P:\Project\C311054–Lower Mapes Creek Restoration\04–Design\A–Plot_Files\2 C311054–P–Notes.dwg
jonesjc Sep–06–12 3:04pm

SW 1/4 SEC. 35, TWP. 24 N., RGE. 4 E.

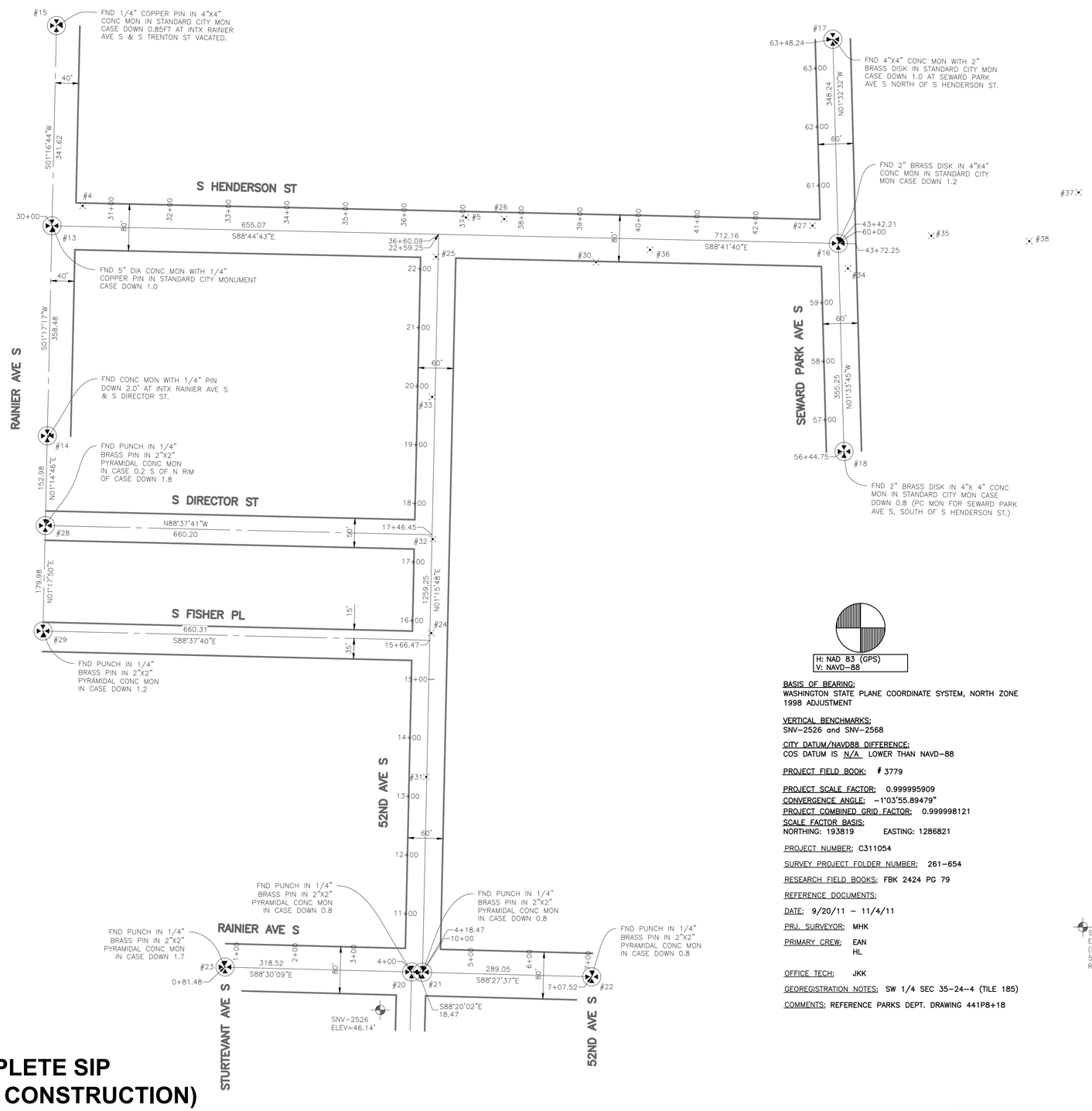

H: NAD 83 (GPS)
V: NAVD-88

BASIS OF BEARING:
WASHINGTON STATE PLANE COORDINATE SYSTEM, NORTH ZONE 1998 ADJUSTMENT

VERTICAL BENCHMARKS:
SNV-2526 and SNV-2568

CITY DATUM/NAVD88 DIFFERENCE:
COS DATUM IS N/A LOWER THAN NAVD-88

PROJECT FIELD BOOK: # 3779

PROJECT SCALE FACTOR: 0.999995909
CONVERGENCE ANGLE: -1°03'55.89479"
PROJECT COMBINED GRID FACTOR: 0.999998121
SCALE FACTOR BASIS:
NORTHING: 193819 EASTING: 1286821

PROJECT NUMBER: C311054

SURVEY PROJECT FOLDER NUMBER: 261-654

RESEARCH FIELD BOOKS: FBK 2424 PG 79

REFERENCE DOCUMENTS:

DATE: 9/20/11 - 11/4/11

PRJ. SURVEYOR: MHK

PRIMARY CREW: EAN
HL

OFFICE TECH: JKK

GEOREGISTRATION NOTES: SW 1/4 SEC 35-24-4 (TILE 185)

COMMENTS: REFERENCE PARKS DEPT. DRAWING 441P8+18

VERTICAL CONTROL

VERTICAL DATUM (NAVD 88)
SOURCE: WCCS DATA WAREHOUSE
ID#: SNV-2526
DESCRIPTION: BRASS CAP
LOCATION: SW QUAD OF INTX OF 52TH AVE S & RAINIER AVE S
ELEVATION: 46.141'

VERTICAL DATUM (NAVD 88)
SOURCE: WCCS DATA WAREHOUSE
ID#: SNV-2568
DESCRIPTION: BRASS CAP
LOCATION: NE QUAD OF INTX OF 56TH AVE S & RAINIER AVE S
ELEVATION: 38.027'

HORIZONTAL CONTROL

HORIZONTAL DATUM (NAD 83/98)
OWNER: CITY OF SEATTLE
ID#: 3779-0703 (PT#22)
DESCRIPTION: MONUMENT IN CASE
LOCATION: INTX OF RAINIER AVE S & 53RD AVE S
NORTHING: 192919.141'
EASTING: 286390.919'

HORIZONTAL DATUM (NAD 83/98)
OWNER: CITY OF SEATTLE
ID#: 3779-0704 (PT #23)
DESCRIPTION: MONUMENT IN CASE
LOCATION: INTX OF RAINIER AVE S & STURTEVANT AVE S
NORTHING: 192935.768'
EASTING: 285765.106'

Survey Control Point Table

Point #	Northing	Easting	Elevation	Description
24	193505.58	1286117.18	32.39	MAG NAIL
32	193665.80	1286119.63	30.76	MAG NAIL
25	194147.38	1286125.20	27.87	MAG NAIL
33	193908.46	1286118.54	30.69	MAG NAIL
26	194211.80	1286241.51	26.29	MAG NAIL
34	194127.46	1286828.15	27.03	MAG NAIL
27	194200.58	1286767.61	27.50	MAG NAIL
35	194183.44	1286970.39	24.97	SPIKE
4	194234.31	1285522.20	39.41	PK NAIL
36	194159.26	1286490.36	27.86	MAG NAIL
5	194214.42	1286176.21	26.71	PK NAIL
37	194257.34	1287221.81	21.87	SPIKE
30	194138.29	1286398.29	28.03	MAG NAIL
38	194174.14	1287137.63	22.81	SPIKE
31	193260.17	1286108.43	37.33	MAG NAIL

Survey Monument Table

Point #	Northing	Easting	Description
13	194200.31	1285469.81	MIC
14	193841.92	1285461.75	MIC
15	194541.85	1285477.43	MIC
16	194170.31	1286811.68	MIC
17	194518.42	1286802.31	MIC
18	193815.19	1286821.37	MIC
20	192927.44	1286083.52	MIC
21	192926.91	1286101.98	MIC
22	192919.14	1286390.92	MIC
23	192935.77	1285765.11	MIC
28	193688.98	1285458.42	MIC
29	193509.05	1285454.35	MIC

100 50 0 100 200
SCALE IN FEET

60% COMPLETE SIP
(NOT FOR CONSTRUCTION)

SURVEY CONTROL PLAN

VAULT	SERIAL NO.	DATE	MARK	NATURE REVISIONS	MADE	CHK'D	REV'D
	35668						

APPROVED FOR ADVERTISING
NANCY LOCKE
DEPARTMENT OF FINANCE & ADMINISTRATIVE SERVICES
SEATTLE, WASHINGTON 20
BY:
PURCHASING & CONTRACTING SERVICES DIRECTOR

NAME OR INITIALS AND DATE	INITIALS AND DATE
DESIGNED	REVIEWED:
CHECKED	DES. CONST.
	SDOT PROJ. MGR.
DRAWN	RECEIVED
CHECKED	REVISED AS BUILT

ALL WORK SHALL BE DONE IN ACCORDANCE WITH THE CITY OF SEATTLE STANDARD PLANS AND SPECIFICATIONS AND OTHER DOCUMENTS CALLED FOR IN SECTION 0-02.3 OF THE PROJECT MANUAL.

MICHAEL J. LYNCH STATE OF WASHINGTON 43145 REGISTERED PROFESSIONAL LAND SURVEYOR

Seattle Public Utilities
City of Seattle
Ray Hoffman, Director

ORDINANCE NO. APPROVED
FUND:
SCALE: 1"=100' INSPECTOR'S BOOK

52ND AVE S CSO REDUCTION & LOWER MAPES CREEK RESTORATION

JOB NO. PC C311054 R/W CO
VAULT PLAN NO. 774-889
SHEET 3 OF 53

P:\Project\C311054-Lower Mapes Creek Restoration\04-Design\A-Plot_Files\3 C311054-P-CTRL.dwg
jonesjc Sep-06-12 3:04pm

NOTES TO REVIEWER:

1. THIS SHEET IS IN PROGRESS. ADDITIONAL CALLOUTS TO BE ADDED BY 90%.

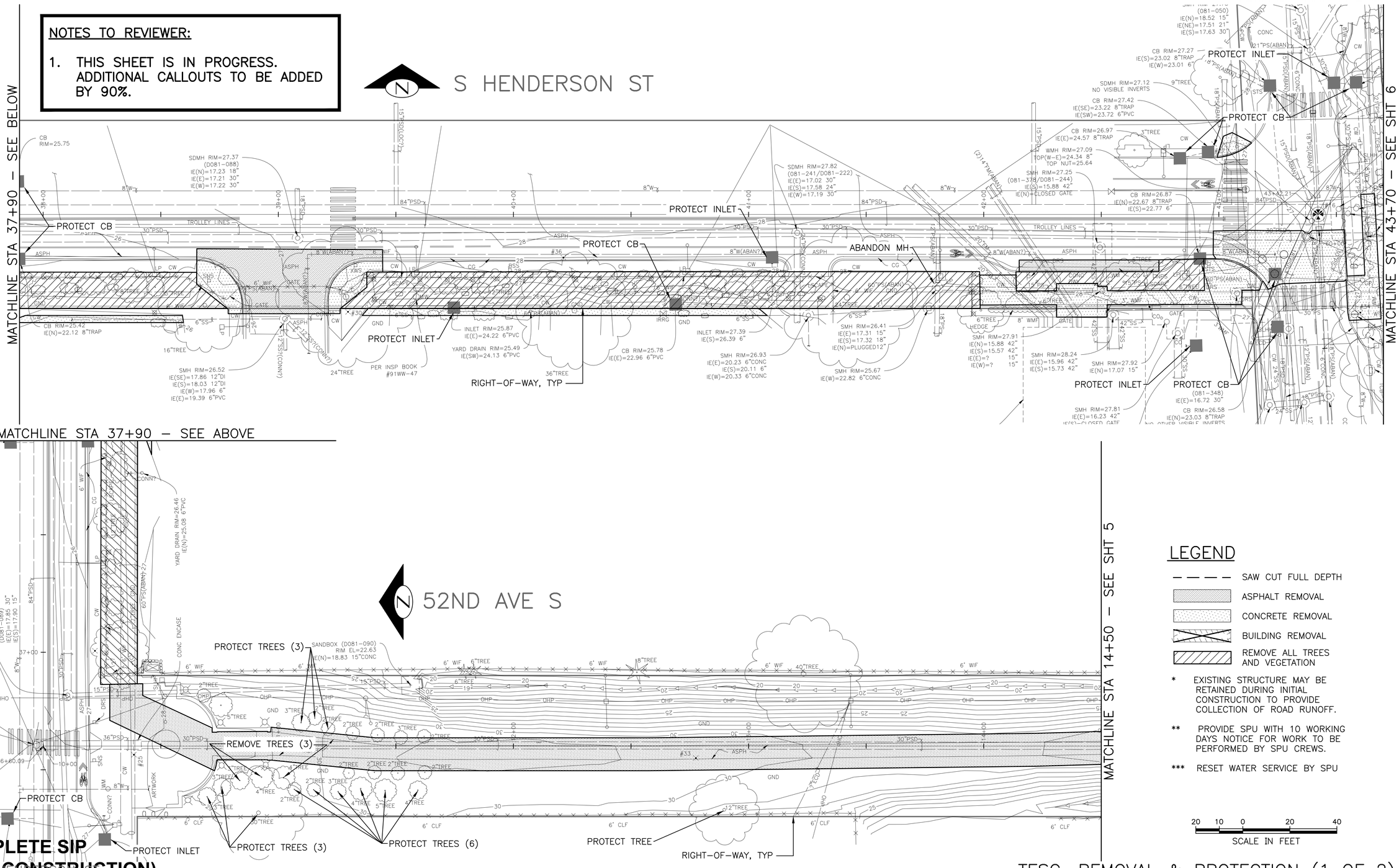

LEGEND

- SAW CUT FULL DEPTH
- ASPHALT REMOVAL
- CONCRETE REMOVAL
- BUILDING REMOVAL
- REMOVE ALL TREES AND VEGETATION

* EXISTING STRUCTURE MAY BE RETAINED DURING INITIAL CONSTRUCTION TO PROVIDE COLLECTION OF ROAD RUNOFF.

** PROVIDE SPU WITH 10 WORKING DAYS NOTICE FOR WORK TO BE PERFORMED BY SPU CREWS.

*** RESET WATER SERVICE BY SPU

20 10 0 20 40
SCALE IN FEET

60% COMPLETE SIP
(NOT FOR CONSTRUCTION)

TESC, REMOVAL & PROTECTION (1 OF 2)

VAULT	SERIAL NO.	DATE	MARK	NATURE REVISIONS	MADE	CHK'D	REV'D
	35668						

APPROVED FOR ADVERTISING
NANCY LOCKE
DEPARTMENT OF FINANCE & ADMINISTRATIVE SERVICES
SEATTLE, WASHINGTON 20
BY:
PURCHASING & CONTRACTING SERVICES DIRECTOR

NAME OR INITIALS AND DATE
DESIGNED
CHECKED
DRAWN
CHECKED

INITIALS AND DATE
REVIEWED:
DES. CONST.
SDOT PROJ. MGR.
RECEIVED
REVISED AS BUILT

ALL WORK SHALL BE DONE IN ACCORDANCE WITH THE CITY OF SEATTLE STANDARD PLANS AND SPECIFICATIONS AND OTHER DOCUMENTS CALLED FOR IN SECTION 0-02.3 OF THE PROJECT MANUAL.

PATRICK J. MORRAL STATE OF WASHINGTON 27456 REGISTERED PROFESSIONAL ENGINEER

Seattle Public Utilities
City of Seattle
Ray Hoffman, Director
ORDINANCE NO.
FUND:
SCALE: 1"=20'
APPROVED
INSPECTOR'S BOOK

52ND AVE S CSO REDUCTION & LOWER MAPES CREEK RESTORATION

JOB NO. PC C311054 R/W CO
VAULT PLAN NO. 774–889
SHEET 4 OF 53

P:\Project\C311054–Lower Mapes Creek Restoration\04–Design\A–Plot_Files\4 C311054–P–TESC–DEMO–REMV–PROT1.dwg
jonesjc Sep–06–12 3:04pm

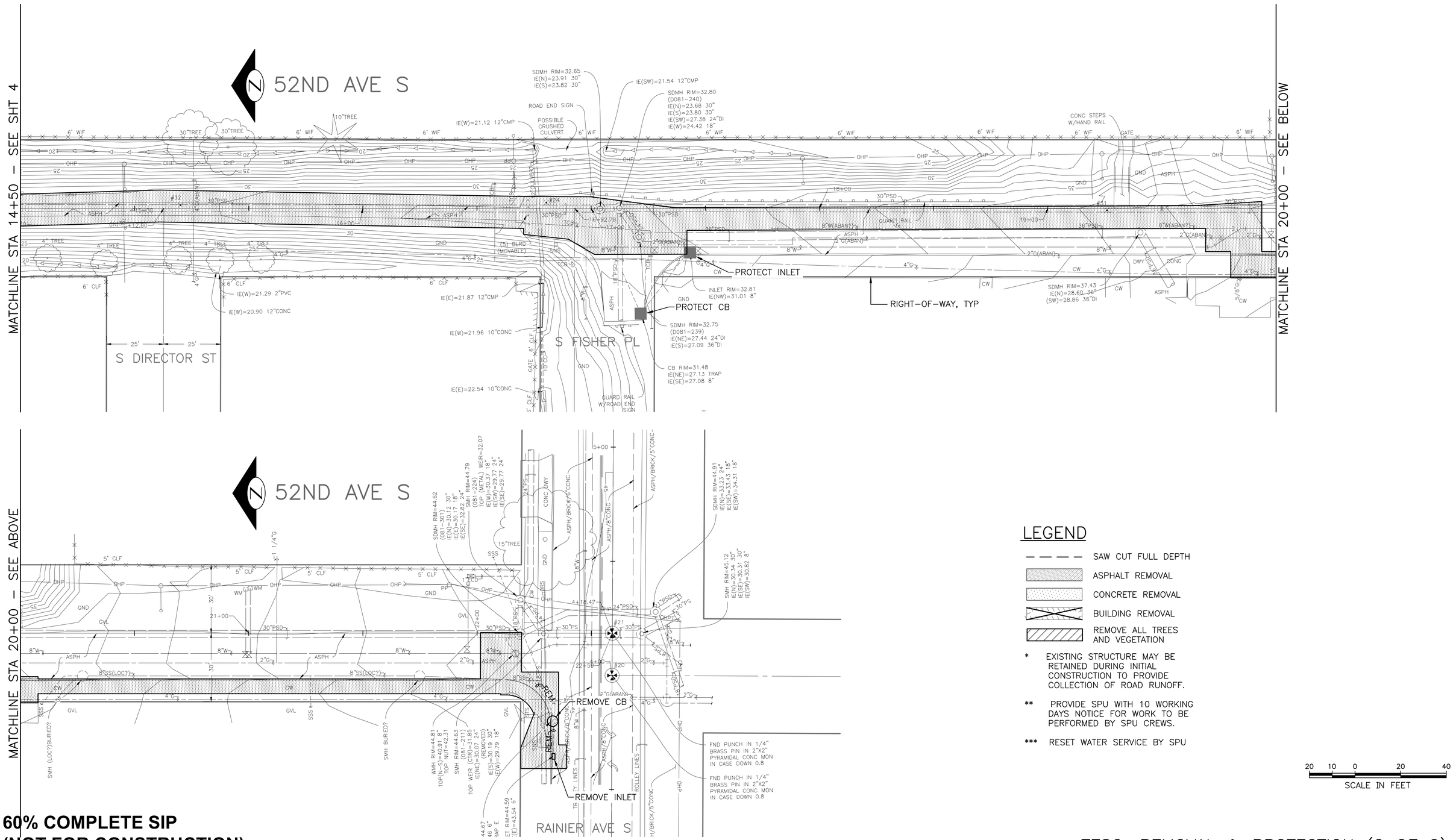

LEGEND

- SAW CUT FULL DEPTH
- ASPHALT REMOVAL
- CONCRETE REMOVAL
- BUILDING REMOVAL
- REMOVE ALL TREES AND VEGETATION

* EXISTING STRUCTURE MAY BE RETAINED DURING INITIAL CONSTRUCTION TO PROVIDE COLLECTION OF ROAD RUNOFF.

** PROVIDE SPU WITH 10 WORKING DAYS NOTICE FOR WORK TO BE PERFORMED BY SPU CREWS.

*** RESET WATER SERVICE BY SPU

20 10 0 20 40
SCALE IN FEET

60% COMPLETE SIP
(NOT FOR CONSTRUCTION)

TESC, REMOVAL & PROTECTION (2 OF 2)

NO.	DATE	MARK	NATURE REVISIONS

VAULT SERIAL NO. 35668

APPROVED FOR ADVERTISING
NANCY LOCKE
DEPARTMENT OF FINANCE & ADMINISTRATIVE SERVICES
SEATTLE, WASHINGTON 20
BY:
PURCHASING & CONTRACTING SERVICES DIRECTOR

NAME OR INITIALS AND DATE	INITIALS AND DATE
DESIGNED	REVIEWED:
CHECKED	DES. CONST.
	SDOT PROJ. MGR.
DRAWN	RECEIVED
CHECKED	REVISED AS BUILT

ALL WORK SHALL BE DONE IN ACCORDANCE WITH THE CITY OF SEATTLE STANDARD PLANS AND SPECIFICATIONS AND OTHER DOCUMENTS CALLED FOR IN SECTION 0-02.3 OF THE PROJECT MANUAL.

PATRICK J. MURPHY STATE OF WASHINGTON 27456 REGISTERED PROFESSIONAL ENGINEER

Seattle Public Utilities
City of Seattle
Ray Hoffman, Director

ORDINANCE NO. APPROVED
FUND:
SCALE: 1"=20' INSPECTOR'S BOOK

52ND AVE S CSO REDUCTION & LOWER MAPES CREEK RESTORATION

JOB NO: PC C311054; R/W; CO
VAULT PLAN NO. 774-889
SHEET 5 OF 53

P:\Project\C311054-Lower Mapes Creek Restoration\04-Design\A-Plot_Files\5 C311054-P-TESC-DEMO-REMV-PROT2.dwg
jonesjc Sep-06-12 3:04pm

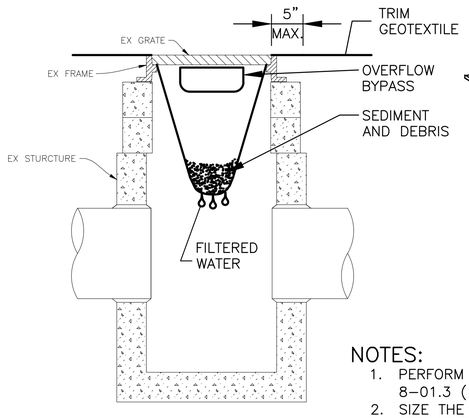

CROSS SECTION

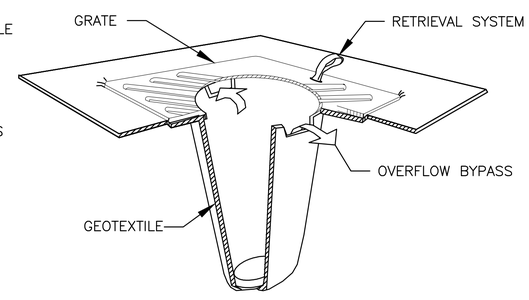

ISOMETRIC VIEW

NOTES:

1. PERFORM MAINTENANCE IN ACCORDANCE WITH STANDARD SPECIFICATION 8-01.3 (12B).
2. SIZE THE BELOW GRATE INLET DEVICE (BGID) FOR THE STORM WATER STRUCTURE IT WILL SERVICE.
3. THE BGID SHALL HAVE A BUILT-IN HIGH-FLOW RELIEF SYSTEM (OVERFLOW BYPASS).
4. THE RETRIEVAL SYSTEM MUST ALLOW REMOVAL OF THE BGID WITHOUT SPILLING THE COLLECTED MATERIAL.

STORM DRAIN INLET PROTECTION

SCALE: 1" = 1'

1 TYP

N

20 10 0 20 40

SCALE IN FEET

MATCHLINE STA 43+70 - SEE SHT 4

VAULT	SERIAL NO.	DATE	MARK	NATURE REVISIONS	MADE	CHK'D	REV'D
	35668						

P:\Project\C311054-Lower Mapes Creek Restoration\04-Design\A-Plot_Files\4 C311054-P-TESC-DEMO-REMV-PROT.dwg
jonesjc Sep-08-12 3:04pm

60% COMPLETE SIP
(NOT FOR CONSTRUCTION)

TESC DETAILS

APPROVED FOR ADVERTISING
NANCY LOCKE
DEPARTMENT OF FINANCE & ADMINISTRATIVE SERVICES
SEATTLE, WASHINGTON 20

BY:
PURCHASING & CONTRACTING SERVICES DIRECTOR

NAME OR INITIALS AND DATE	INITIALS AND DATE
DESIGNED	REVIEWED:
CHECKED	DES. CONST.
	SDOT PROJ. MGR.
DRAWN	RECEIVED
CHECKED	REVISED AS BUILT

ALL WORK SHALL BE DONE IN ACCORDANCE WITH THE CITY OF SEATTLE STANDARD PLANS AND SPECIFICATIONS AND OTHER DOCUMENTS CALLED FOR IN SECTION 0-02.3 OF THE PROJECT MANUAL.

PATRICK J. MURPHY STATE OF WASHINGTON 27456 REGISTERED PROFESSIONAL ENGINEER

Seattle Public Utilities
City of Seattle
Ray Hoffman, Director

ORDINANCE NO.
FUND:
SCALE: 1"=20'
APPROVED
INSPECTOR'S BOOK

52ND AVE S CSO REDUCTION & LOWER MAPES CREEK RESTORATION

JOB NO. PC C311054 R/W CO

VAULT PLAN NO. 774-889

SHEET 6 OF 53

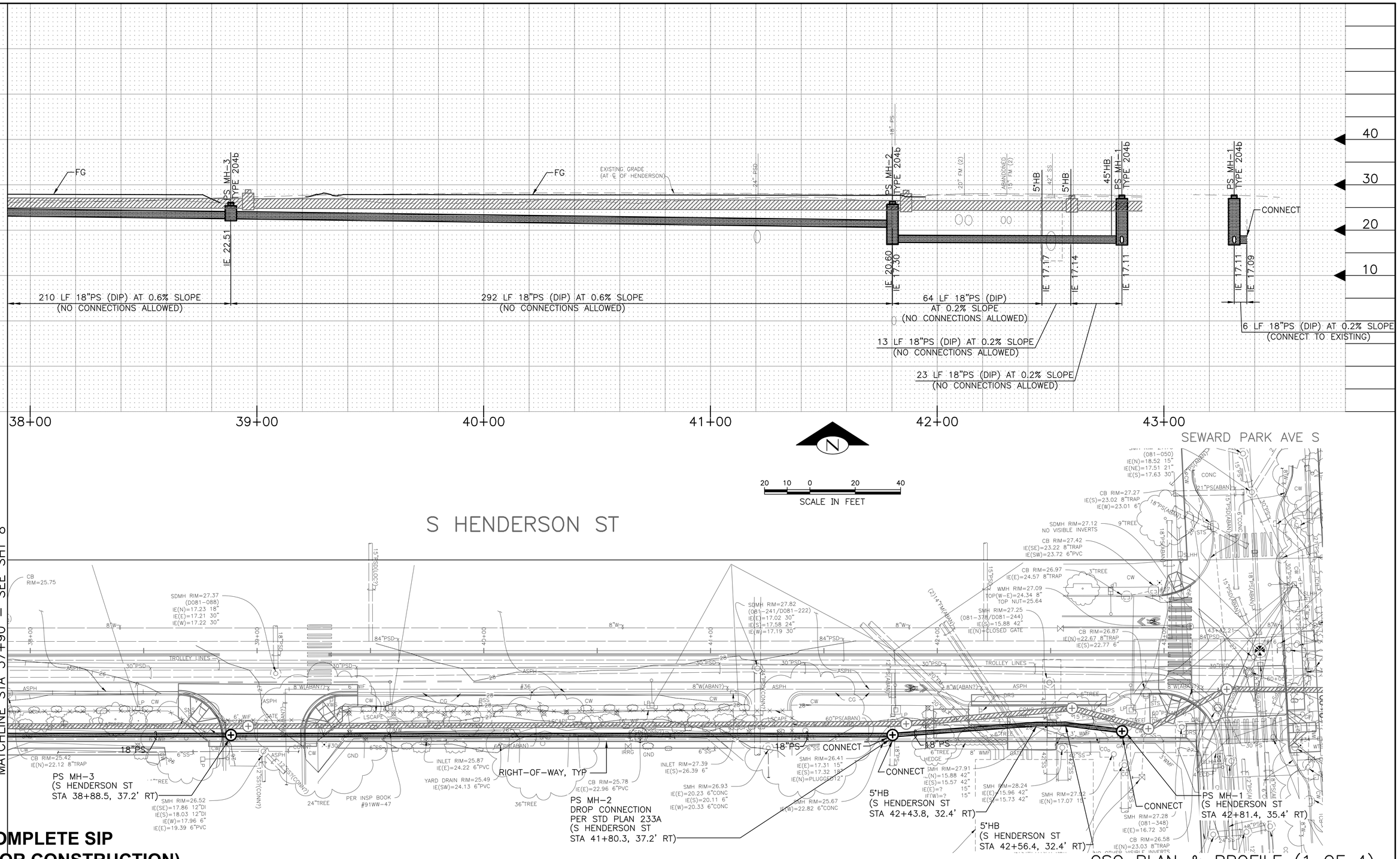

60% COMPLETE SIP
(NOT FOR CONSTRUCTION)

CSO PLAN & PROFILE (1 OF 4)

NATURE OF REVISIONS	MADE	CHK'D	REV'D

VAULT SERIAL NO.	DATE	MARK
35668		

APPROVED FOR ADVERTISING
NANCY LOCKE
DEPARTMENT OF FINANCE & ADMINISTRATIVE SERVICES
SEATTLE, WASHINGTON 20

BY:
PURCHASING & CONTRACTING SERVICES DIRECTOR

NAME OR INITIALS AND DATE	INITIALS AND DATE
DESIGNED	REVIEWED:
CHECKED	DES. CONST.
	SDOT PROJ. MGR.
DRAWN	RECEIVED
CHECKED	REVISED AS BUILT

ALL WORK SHALL BE DONE IN ACCORDANCE WITH THE CITY OF SEATTLE STANDARD PLANS AND SPECIFICATIONS AND OTHER DOCUMENTS CALLED FOR IN SECTION 0-02.3 OF THE PROJECT MANUAL.

PATRICK J. MURPHY
STATE OF WASHINGTON
27456
REGISTERED
PROFESSIONAL ENGINEER

Seattle Public Utilities
City of Seattle
Ray Hoffman, Director

ORDINANCE NO. APPROVED
FUND:
SCALE: H. 1"=20', V. 1"=10' INSPECTOR'S BOOK

52ND AVE S CSO REDUCTION & LOWER MAPES CREEK RESTORATION

JOB NO	
PC	C311054
R/W	
CO	
VAULT PLAN NO.	774-889
SHEET	7 OF 53

P:\Project\C311054-Lower Mapes Creek Restoration\04-Design\A-Plot_Files\7 C311054-P-CSWR.dwg
jonesjc Sep-06-12 3:05pm

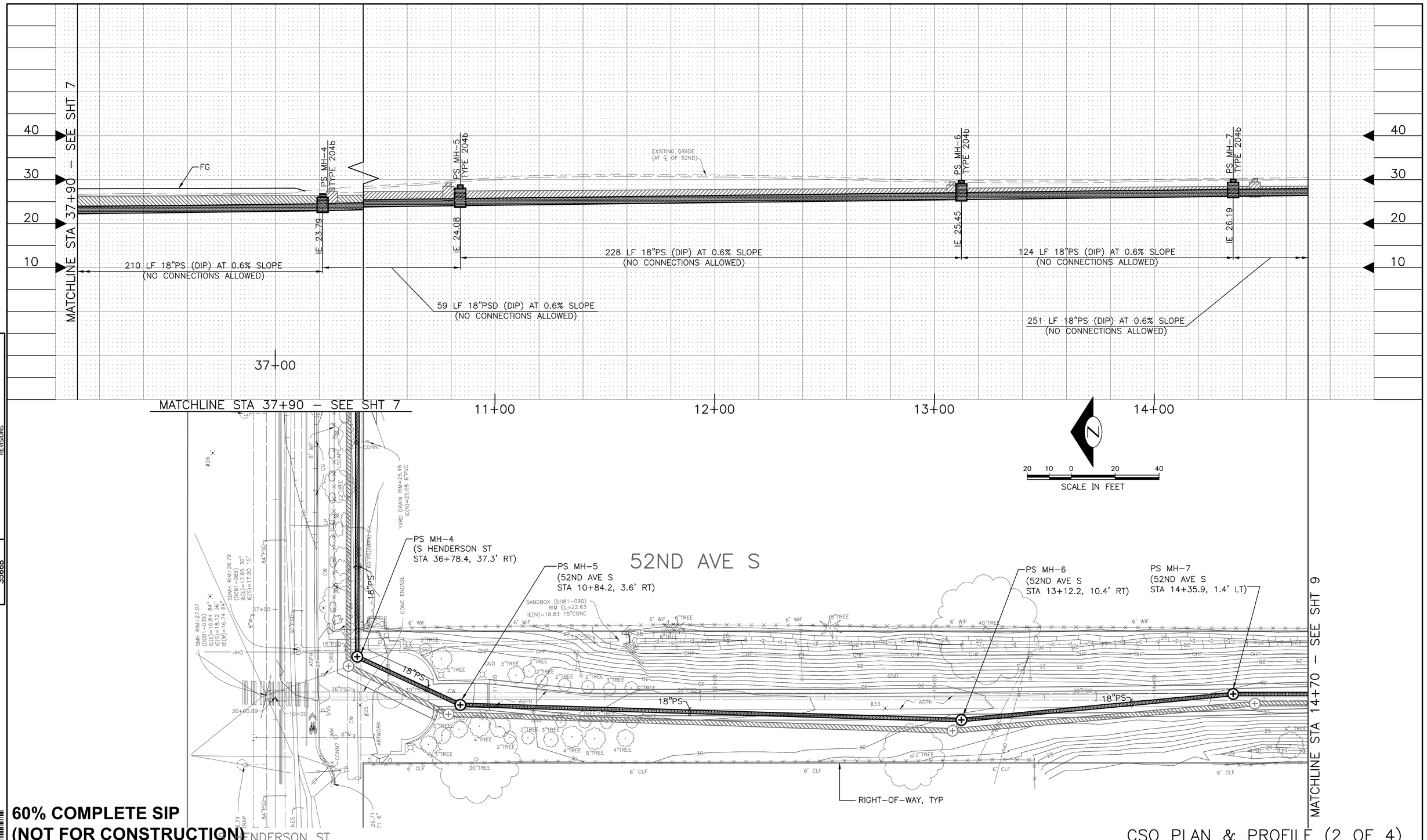

60% COMPLETE SIP
(NOT FOR CONSTRUCTION)

CSO PLAN & PROFILE (2 OF 4)

NO.	DATE	MARK	NATURE REVISIONS	MADE	CHK'D	REV'D
VAULT SERIAL NO. 35668						

APPROVED FOR ADVERTISING
NANCY LOCKE
DEPARTMENT OF FINANCE & ADMINISTRATIVE SERVICES
SEATTLE, WASHINGTON 20
BY:
PURCHASING & CONTRACTING SERVICES DIRECTOR

NAME OR INITIALS AND DATE	INITIALS AND DATE
DESIGNED	REVIEWED:
CHECKED	DES. CONST.
	SDOT PROJ. MGR.
DRAWN	RECEIVED
CHECKED	REVISED AS BUILT

ALL WORK SHALL BE DONE IN ACCORDANCE WITH THE CITY OF SEATTLE STANDARD PLANS AND SPECIFICATIONS AND OTHER DOCUMENTS CALLED FOR IN SECTION 0-02.3 OF THE PROJECT MANUAL.

PATRICK J. MIRIAM STATE OF WASHINGTON 27456 REGISTERED PROFESSIONAL ENGINEER

Seattle Public Utilities
City of Seattle
Ray Hoffman, Director
ORDINANCE NO. APPROVED
FUND:
SCALE: H. 1"=20', V. 1"=10' INSPECTOR'S BOOK

52ND AVE S CSO REDUCTION & LOWER MAPES CREEK RESTORATION

JOB NO. PC C311054
R/W
CO
VAULT PLAN NO. 774–889
SHEET 8 OF 53

P:\Project\C311054–Lower Mapes Creek Restoration\04–Design\A–Plot_Files\B C311054–P–CSWR.dwg
jonesjc Sep–06–12 3:05pm

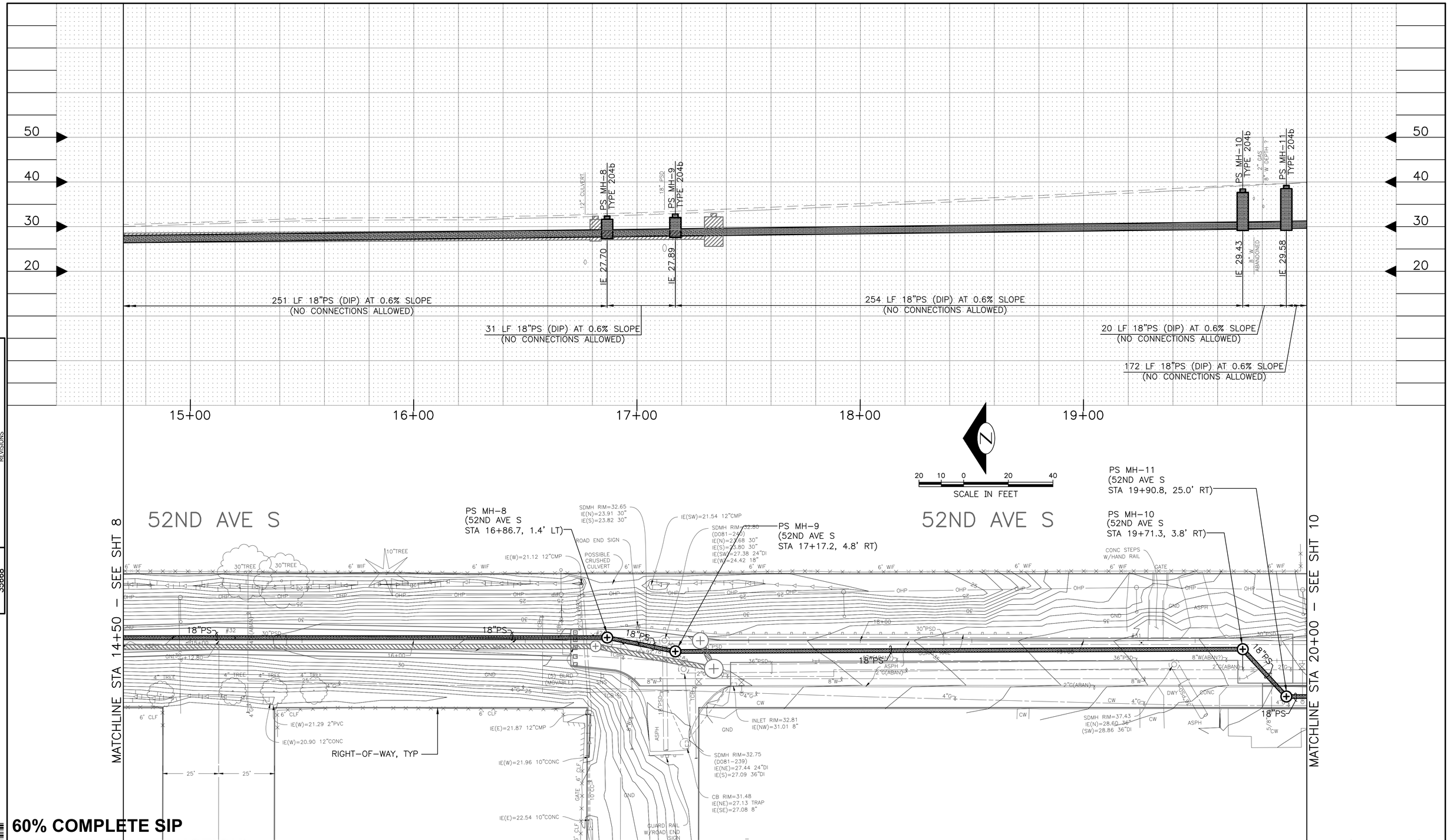

60% COMPLETE SIP
(NOT FOR CONSTRUCTION)

CSO PLAN & PROFILE (3 OF 4)

NATURE REVISIONS	MADE	CHK'D	REV'D

MARK	DATE	VAULT SERIAL NO.
		35668

APPROVED FOR ADVERTISING
NANCY LOCKE
DEPARTMENT OF FINANCE & ADMINISTRATIVE SERVICES
SEATTLE, WASHINGTON 20

BY:
PURCHASING & CONTRACTING SERVICES DIRECTOR

NAME OR INITIALS AND DATE	INITIALS AND DATE
DESIGNED	REVIEWED:
CHECKED	DES. CONST.
	SDOT PROJ. MGR.
DRAWN	RECEIVED
CHECKED	REVISED AS BUILT

ALL WORK SHALL BE DONE IN ACCORDANCE WITH THE CITY OF SEATTLE STANDARD PLANS AND SPECIFICATIONS AND OTHER DOCUMENTS CALLED FOR IN SECTION 0-02.3 OF THE PROJECT MANUAL.

PATRICK J. MURPHY
STATE OF WASHINGTON
27456
REGISTERED
PROFESSIONAL ENGINEER

Seattle Public Utilities

City of Seattle
Ray Hoffman, Director

ORDINANCE NO. APPROVED
FUND:
SCALE: H. 1"=20', V. 1"=10' INSPECTOR'S BOOK

52ND AVE S CSO REDUCTION & LOWER MAPES CREEK RESTORATION

JOB NO.	
PC	C311054
R/W	
CO	
VAULT PLAN NO.	774-889
SHEET	9 OF 53

P:\Project\C311054-Lower Mapes Creek Restoration\04-Design\A-Plot_Files\9 C311054-P-CSWR.dwg
jonesjc Sep-06-12 3:05pm

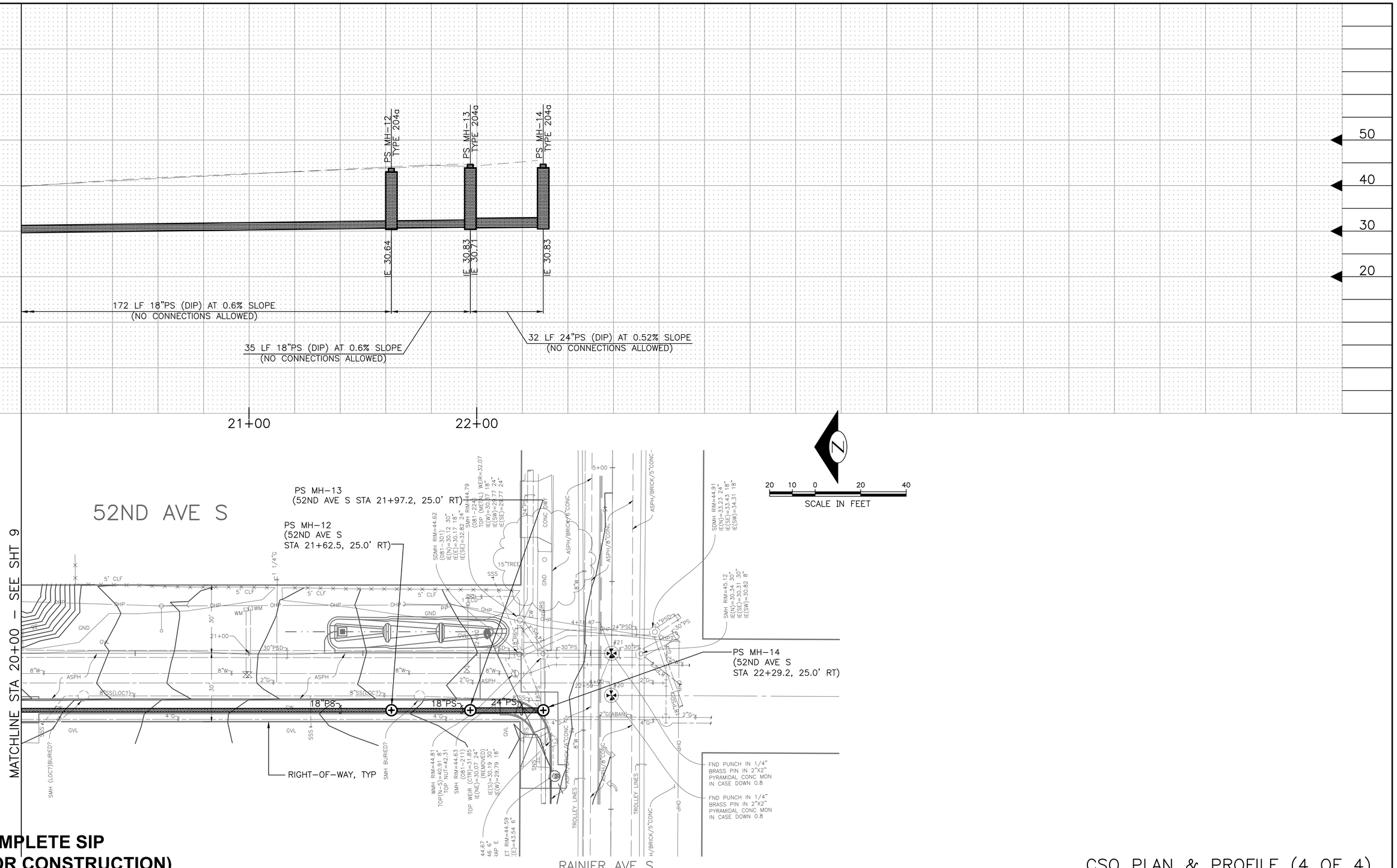

60% COMPLETE SIP
(NOT FOR CONSTRUCTION)

CSO PLAN & PROFILE (4 OF 4)

VAULT SERIAL NO.	DATE	MARK	NATURE REVISIONS	MADE	CHK'D	REV'D
35668						

P:\Project\C311054-Lower Mapes Creek Restoration\04-Design\A-Plot_Files\10 C311054-P-CSWR.dwg
jonesjc Sep-06-12 3:06pm

APPROVED FOR ADVERTISING
NANCY LOCKE
DEPARTMENT OF FINANCE & ADMINISTRATIVE SERVICES
SEATTLE, WASHINGTON 20
BY:
PURCHASING & CONTRACTING SERVICES DIRECTOR

NAME OR INITIALS AND DATE
DESIGNED
CHECKED
DRAWN
CHECKED

INITIALS AND DATE
REVIEWED:
DES. CONST.
SDOT PROJ. MGR.
RECEIVED
REVISED AS BUILT

ALL WORK SHALL BE DONE IN ACCORDANCE WITH THE CITY OF SEATTLE STANDARD PLANS AND SPECIFICATIONS AND OTHER DOCUMENTS CALLED FOR IN SECTION 0-02.3 OF THE PROJECT MANUAL.

PATRICK J. MURPHY
STATE OF WASHINGTON
27456
REGISTERED PROFESSIONAL ENGINEER

Seattle Public Utilities
City of Seattle
Ray Hoffman, Director
ORDINANCE NO. APPROVED
FUND:
SCALE: H. 1"=20', V. 1"=10' INSPECTOR'S BOOK

52ND AVE S CSO REDUCTION & LOWER MAPES CREEK RESTORATION

JOB NO. PC C311054
R/W
CO
VAULT PLAN NO. 774-889
SHEET 10 OF 53

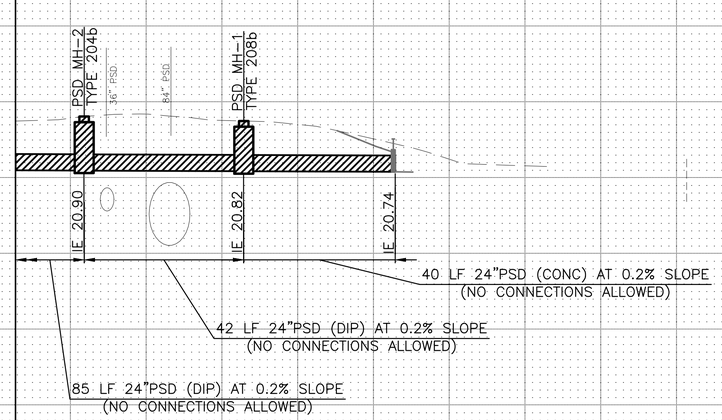

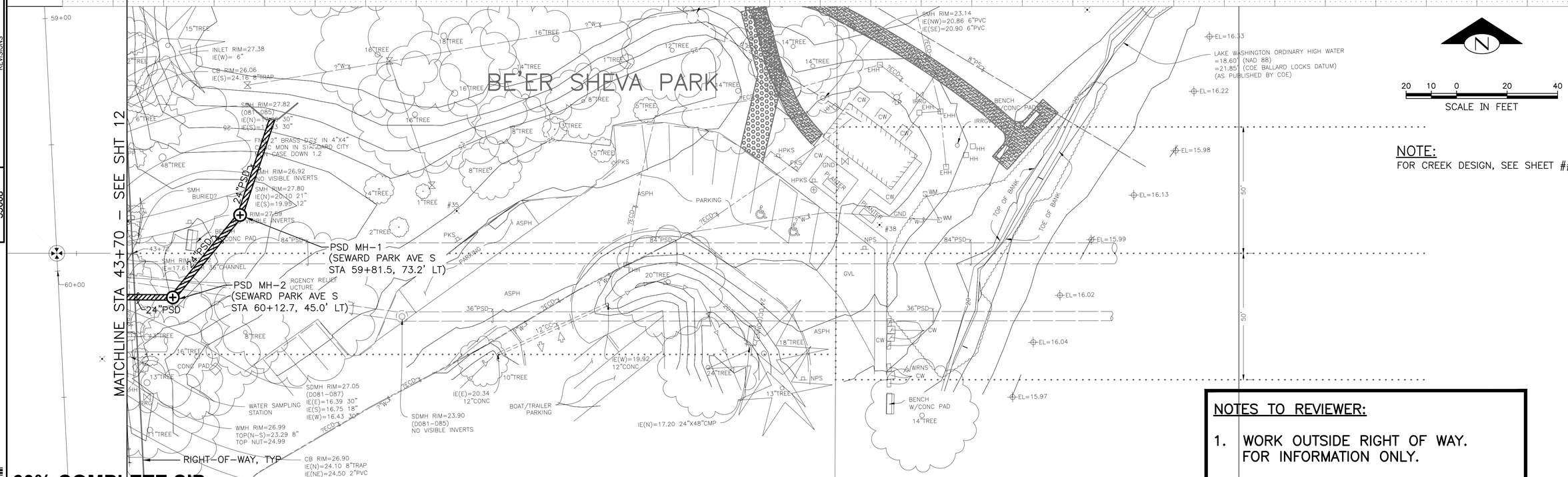

NOTE:
FOR CREEK DESIGN, SEE SHEET ##.

NOTES TO REVIEWER:

1. WORK OUTSIDE RIGHT OF WAY. FOR INFORMATION ONLY.

60% COMPLETE SIP
(NOT FOR CONSTRUCTION)

STORMWATER PLAN & PROFILE (1 OF 4)

VAULT	SERIAL NO.	DATE	MARK	NATURE REVISIONS	MADE	CHK'D	REV'D
	35668						

APPROVED FOR ADVERTISING
NANCY LOCKE
DEPARTMENT OF FINANCE & ADMINISTRATIVE SERVICES
SEATTLE, WASHINGTON 20

BY:
PURCHASING & CONTRACTING SERVICES DIRECTOR

NAME OR INITIALS AND DATE	INITIALS AND DATE
DESIGNED	REVIEWED:
CHECKED	DES. CONST.
	SDOT PROJ. MGR.
DRAWN	RECEIVED
CHECKED	REVISED AS BUILT

ALL WORK SHALL BE DONE IN ACCORDANCE WITH THE CITY OF SEATTLE STANDARD PLANS AND SPECIFICATIONS AND OTHER DOCUMENTS CALLED FOR IN SECTION 0-02.3 OF THE PROJECT MANUAL.

PATRICK J. MURPHY — STATE OF WASHINGTON — 27456 — REGISTERED PROFESSIONAL ENGINEER

Seattle Public Utilities

City of Seattle
Ray Hoffman, Director

ORDINANCE NO. APPROVED
FUND:
SCALE: H. 1"=20', V. 1"=10' INSPECTOR'S BOOK

52ND AVE S CSO REDUCTION & LOWER MAPES CREEK RESTORATION

JOB NO.: PC C311054; R/W; CO
VAULT PLAN NO. 774-889
SHEET 11 OF 53

P:\Project\C311054-Lower Mapes Creek Restoration\04-Design\A-Plot_Files\11 C311054-P-STRM.dwg
jonesjc Sep-06-12 3:06pm

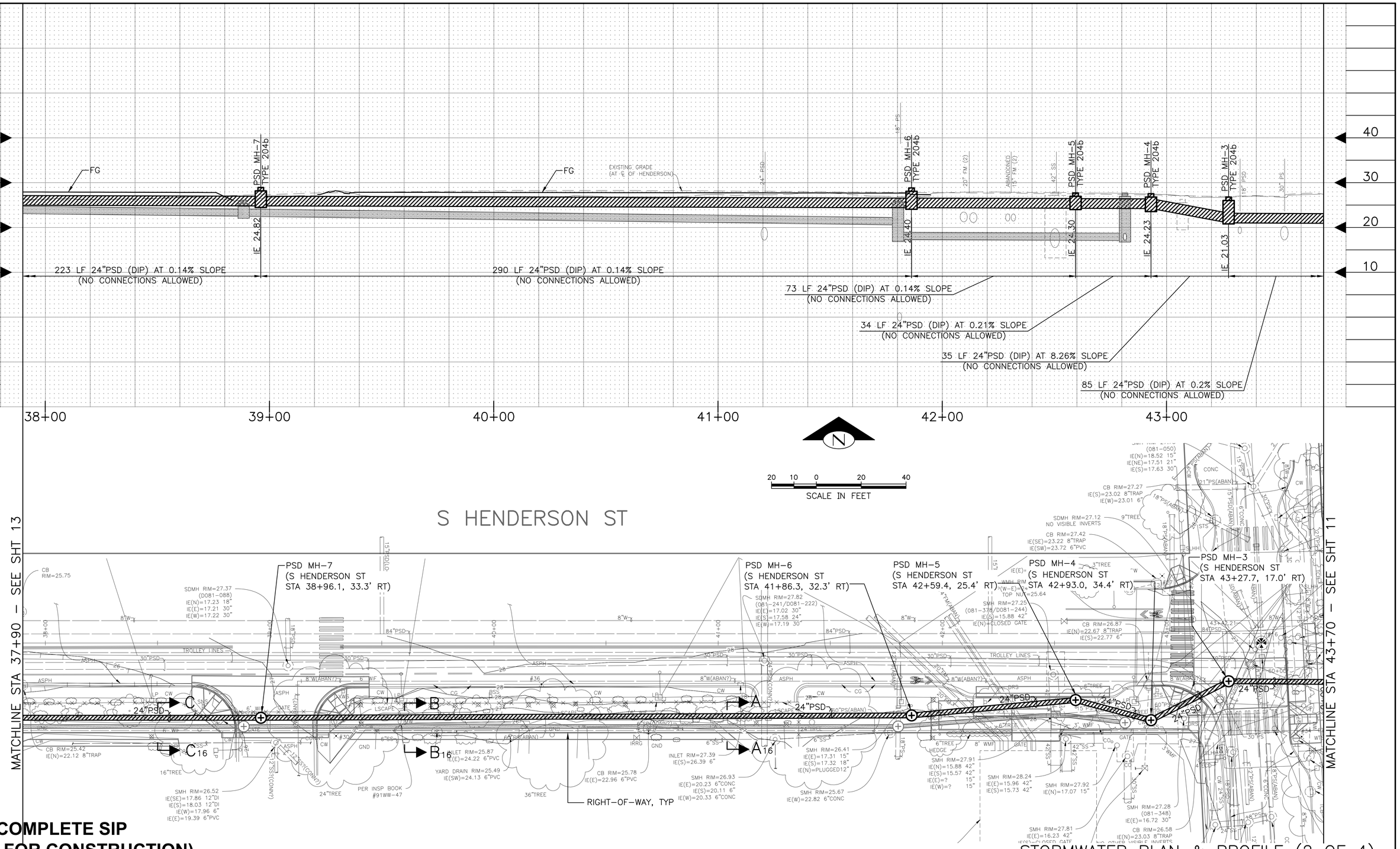

60% COMPLETE SIP
(NOT FOR CONSTRUCTION)

STORMWATER PLAN & PROFILE (2 OF 4)

NATURE	REVISIONS		
MARK	DATE	MADE	CHK'D	REV'D

VAULT SERIAL NO. 35668

APPROVED FOR ADVERTISING
NANCY LOCKE
DEPARTMENT OF FINANCE & ADMINISTRATIVE SERVICES
SEATTLE, WASHINGTON 20
BY:
PURCHASING & CONTRACTING SERVICES DIRECTOR

NAME OR INITIALS AND DATE	INITIALS AND DATE
DESIGNED	REVIEWED:
CHECKED	DES. CONST.
	SDOT PROJ. MGR.
DRAWN	RECEIVED
CHECKED	REVISED AS BUILT

ALL WORK SHALL BE DONE IN ACCORDANCE WITH THE CITY OF SEATTLE STANDARD PLANS AND SPECIFICATIONS AND OTHER DOCUMENTS CALLED FOR IN SECTION 0-02.3 OF THE PROJECT MANUAL.

PATRICK J. MURPHY STATE OF WASHINGTON 27456 REGISTERED PROFESSIONAL ENGINEER

Seattle Public Utilities
City of Seattle
Ray Hoffman, Director
ORDINANCE NO. APPROVED
FUND:
SCALE: H. 1"=20', V. 1"=10' INSPECTOR'S BOOK

52ND AVE S CSO REDUCTION & LOWER MAPES CREEK RESTORATION

JOB NO.
PC C311054
R/W
CO
VAULT PLAN NO. 774-889
SHEET 12 OF 53

P:\Project\C311054-Lower Mapes Creek Restoration\04-Design\A-Plot_Files\12 C311054-P-STRM.dwg
jonesjc Sep-06-12 3:06pm

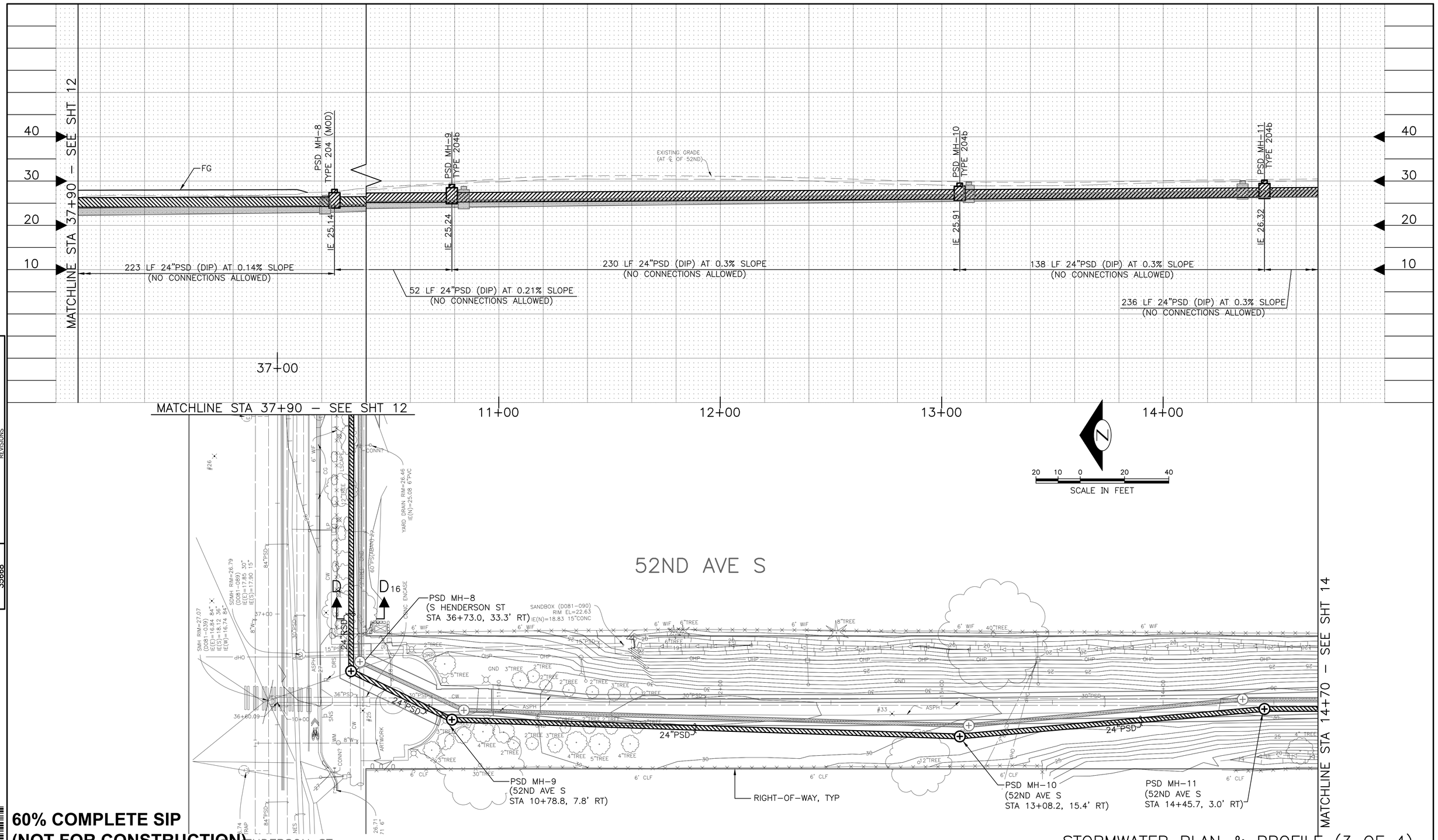

STORMWATER PLAN & PROFILE (3 OF 4)

60% COMPLETE SIP
(NOT FOR CONSTRUCTION)

VAULT SERIAL NO.	DATE	MARK	NATURE REVISIONS	MADE	CHK'D	REV'D
35668						

APPROVED FOR ADVERTISING
NANCY LOCKE
DEPARTMENT OF FINANCE & ADMINISTRATIVE SERVICES
SEATTLE, WASHINGTON 20
BY:
PURCHASING & CONTRACTING SERVICES DIRECTOR

NAME OR INITIALS AND DATE	INITIALS AND DATE
DESIGNED	REVIEWED:
CHECKED	DES. CONST.
	SDOT PROJ. MGR.
DRAWN	RECEIVED
CHECKED	REVISED AS BUILT

ALL WORK SHALL BE DONE IN ACCORDANCE WITH THE CITY OF SEATTLE STANDARD PLANS AND SPECIFICATIONS AND OTHER DOCUMENTS CALLED FOR IN SECTION 0–02.3 OF THE PROJECT MANUAL.

PATRICK J. MURPHY STATE OF WASHINGTON 27456 REGISTERED PROFESSIONAL ENGINEER

Seattle Public Utilities
City of Seattle
Ray Hoffman, Director
ORDINANCE NO. APPROVED
FUND:
SCALE: H. 1"=20', V. 1"=10' INSPECTOR'S BOOK

52ND AVE S CSO REDUCTION & LOWER MAPES CREEK RESTORATION

JOB NO. PC C311054 R/W CO
VAULT PLAN NO. 774–889
SHEET 13 OF 53

P:\Project\C311054–Lower Mapes Creek Restoration\04–Design\A–Plot_Files\13 C311054–P–STRM.dwg
jonesjc Sep–06–12 3:06pm

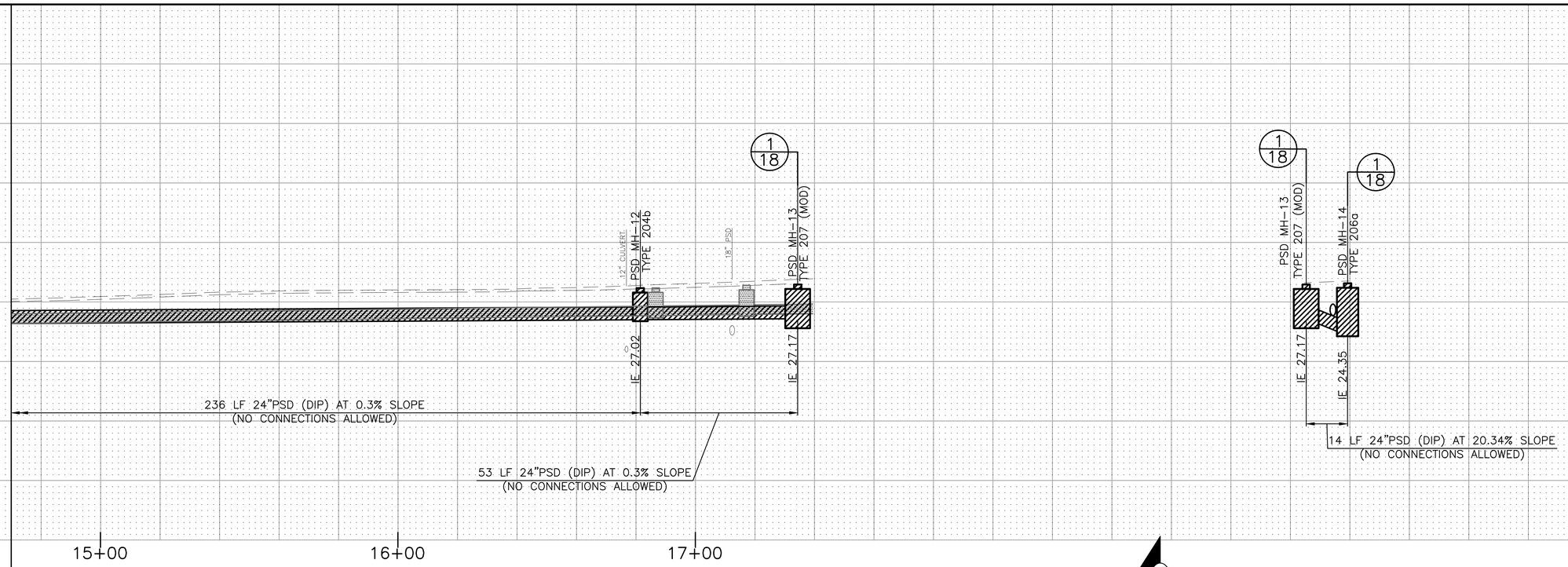

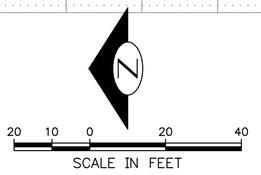

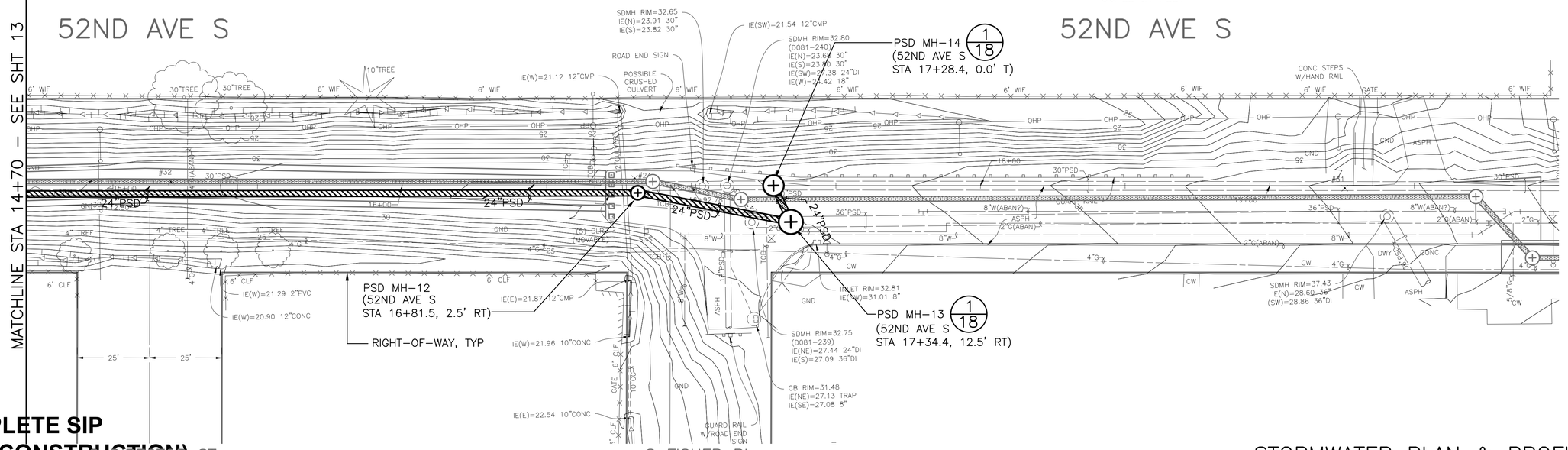

60% COMPLETE SIP
(NOT FOR CONSTRUCTION)

STORMWATER PLAN & PROFILE (4 OF 4)

VAULT	SERIAL NO.	DATE	MARK	NATURE REVISIONS	MADE	PHK'D	REV'D
	35668						

P:\Project\C311054-Lower Mapes Creek Restoration\04-Design\A-Plot_Files\14 C311054-P-STRM.dwg
jonesjc Sep-06-12 3:07pm

APPROVED FOR ADVERTISING
NANCY LOCKE
DEPARTMENT OF FINANCE & ADMINISTRATIVE SERVICES
SEATTLE, WASHINGTON 20
BY:
PURCHASING & CONTRACTING SERVICES DIRECTOR

NAME OR INITIALS AND DATE
DESIGNED
CHECKED
DRAWN
CHECKED

INITIALS AND DATE
REVIEWED:
DES. CONST.
SDOT PROJ. MGR.
RECEIVED
REVISED AS BUILT

ALL WORK SHALL BE DONE IN ACCORDANCE WITH THE CITY OF SEATTLE STANDARD PLANS AND SPECIFICATIONS AND OTHER DOCUMENTS CALLED FOR IN SECTION 0-02.3 OF THE PROJECT MANUAL.

PATRICK J. MORRAL
STATE OF WASHINGTON
27456
REGISTERED
PROFESSIONAL ENGINEER

Seattle Public Utilities
City of Seattle
Ray Hoffman, Director
ORDINANCE NO. APPROVED
FUND:
SCALE: H. 1"=20', V. 1"=10' INSPECTOR'S BOOK

52ND AVE S CSO REDUCTION & LOWER MAPES CREEK RESTORATION

JOB NO. PC C311054
R/W
CO
VAULT PLAN NO. 774-889
SHEET 14 OF 53

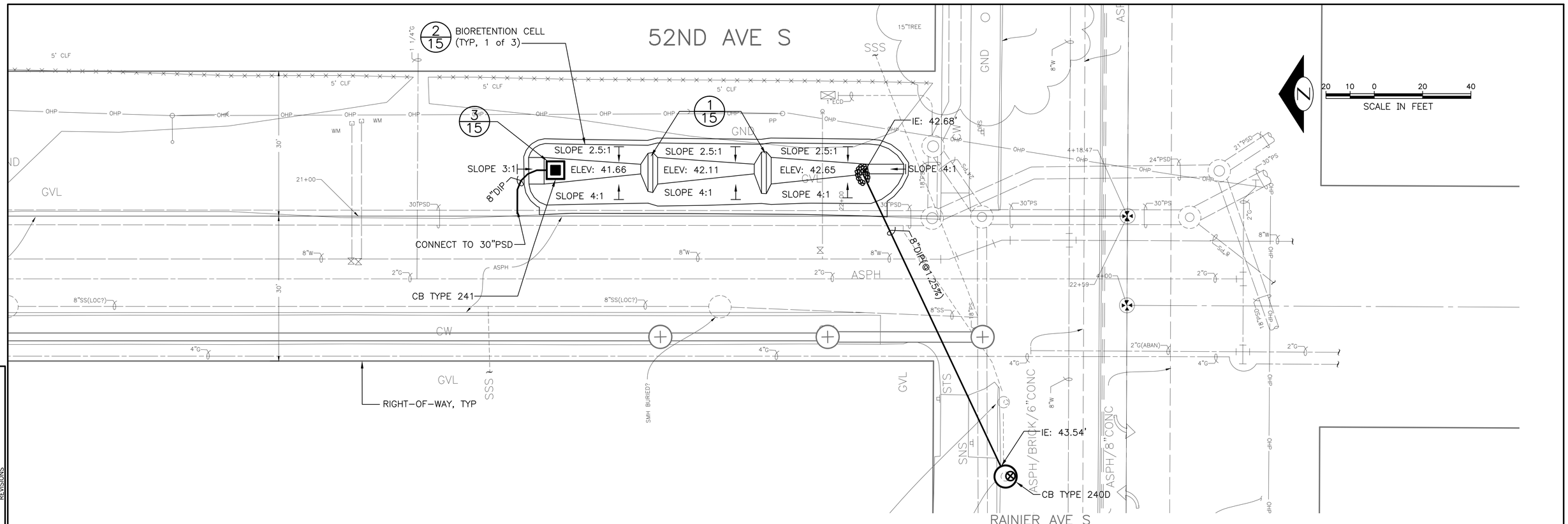

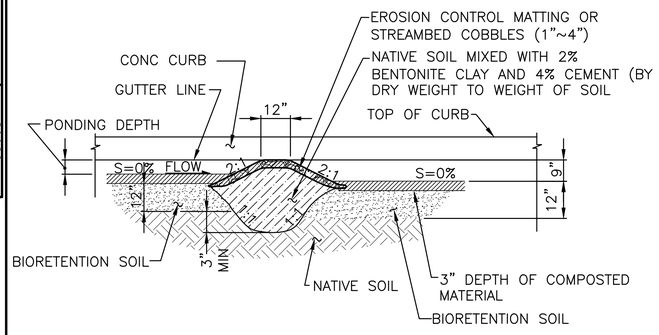

EARTH CHECK DAM 1/15
SCALE: NTS

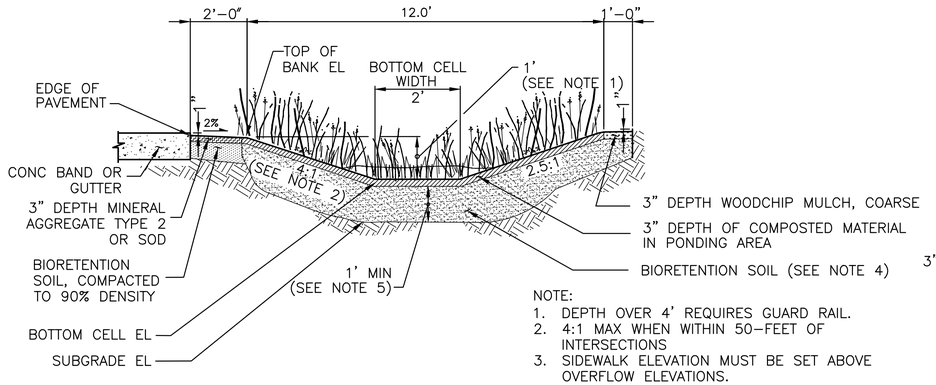

NOTE:
1. DEPTH OVER 4' REQUIRES GUARD RAIL.
2. 4:1 MAX WHEN WITHIN 50-FEET OF INTERSECTIONS
3. SIDEWALK ELEVATION MUST BE SET ABOVE OVERFLOW ELEVATIONS.
4. SCARIFY SUBGRADE 3" MIN BEFORE BIORETENTION SOIL INSTALLATION.
5. 1.5' MIN IF USED FOR WQ.

BIORETENTION BIOFILTRATION CELL WO CURB 2/15
SCALE: NTS

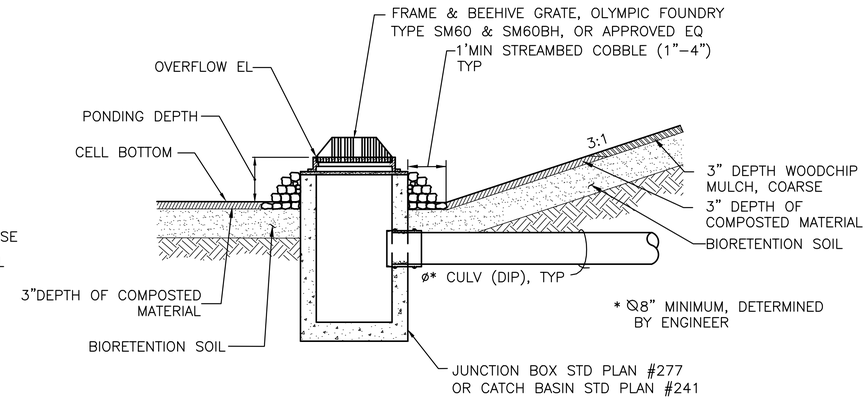

* ø8" MINIMUM, DETERMINED BY ENGINEER

OVERFLOW STRUCTURE 3/15
SCALE: NTS

60% COMPLETE SIP
(NOT FOR CONSTRUCTION)

BIORETENTION PLAN & DETAILS

APPROVED FOR ADVERTISING
NANCY LOCKE
DEPARTMENT OF FINANCE & ADMINISTRATIVE SERVICES
SEATTLE, WASHINGTON 20
BY:
PURCHASING & CONTRACTING SERVICES DIRECTOR

NAME OR INITIALS AND DATE	INITIALS AND DATE
DESIGNED	REVIEWED:
CHECKED	DES. CONST.
	SDOT PROJ. MGR.
DRAWN	RECEIVED
CHECKED	REVISED AS BUILT

ALL WORK SHALL BE DONE IN ACCORDANCE WITH THE CITY OF SEATTLE STANDARD PLANS AND SPECIFICATIONS AND OTHER DOCUMENTS CALLED FOR IN SECTION 0-02.3 OF THE PROJECT MANUAL.

Seattle Public Utilities
City of Seattle
Ray Hoffman, Director
ORDINANCE NO. APPROVED
FUND:
SCALE: H. 1"=20' INSPECTOR'S BOOK

52ND AVE S CSO REDUCTION & LOWER MAPES CREEK RESTORATION

JOB NO. PC C311054 R/W CO
VAULT PLAN NO. 774-889
SHEET 15 OF 53

NATURE REVISIONS	MADE	CHK'D	REV'D

VAULT SERIAL NO. 35668

P:\Project\C311054-Lower Mapes Creek Restoration\04-Design\A-Plot_Files\15 C311054-P-STRM-Bioretention.dwg
jonesjc Sep-06-12 3:07pm

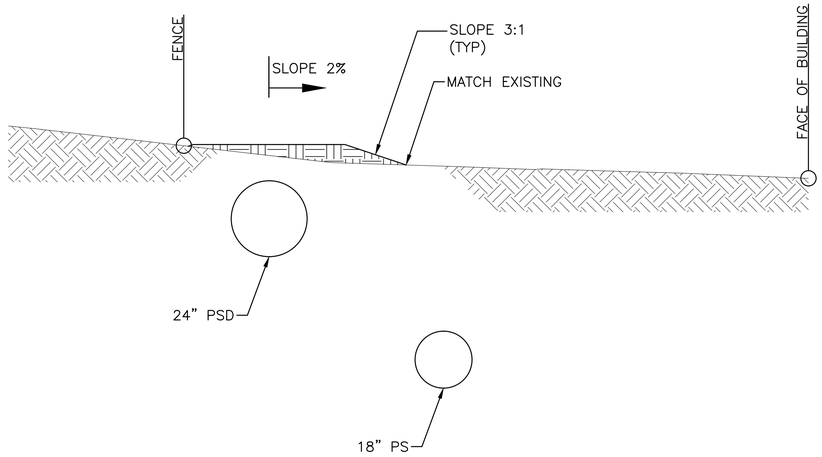

SECTION A–A 12
SCALE: 1" = 2'

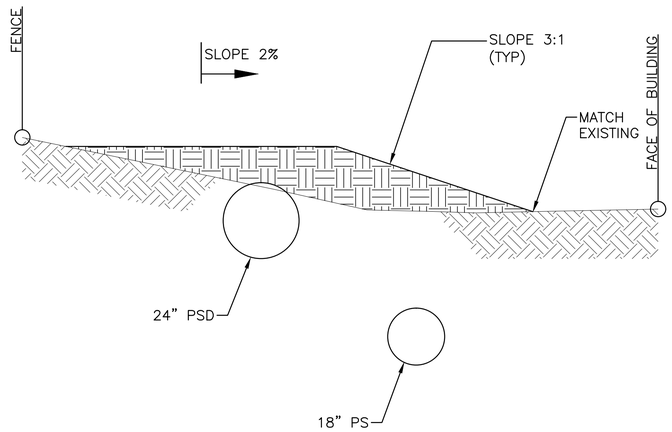

SECTION B–B 12
SCALE: 1" = 2'

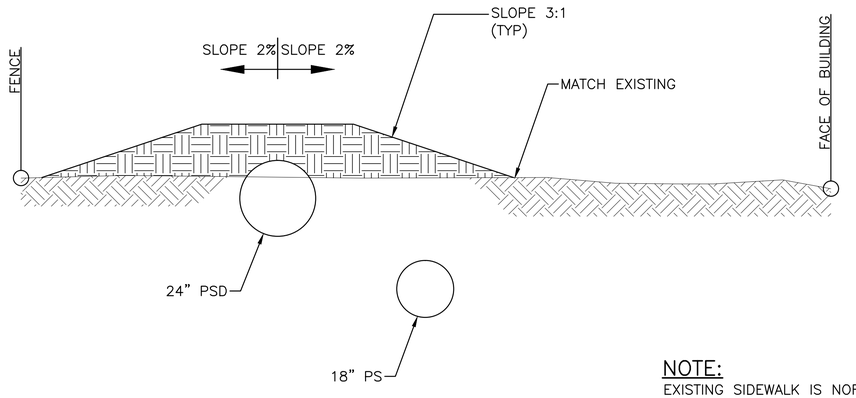

SECTION C–C 12
SCALE: 1" = 2'

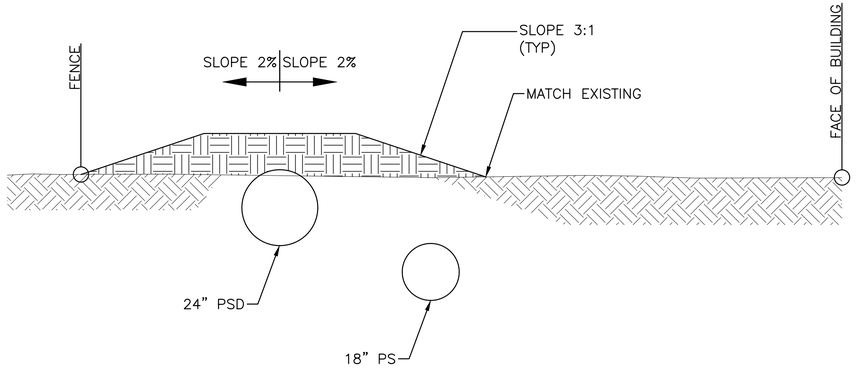

SECTION D–D 13
SCALE: 1" = 2'

NOTE:
EXISTING SIDEWALK IS NORTH (TO THE LEFT IN THESE SECTIONS) OF FENCE.

60% COMPLETE SIP
(NOT FOR CONSTRUCTION)

S HENDERSON ST GRADING SECTIONS

NO.	DATE	MARK	REVISIONS	MADE	CHK'D	REV'D
			NATURE			

VAULT SERIAL NO. 35668

APPROVED FOR ADVERTISING
NANCY LOCKE
DEPARTMENT OF FINANCE & ADMINISTRATIVE SERVICES
SEATTLE, WASHINGTON 20
BY:
PURCHASING & CONTRACTING SERVICES DIRECTOR

NAME OR INITIALS AND DATE	INITIALS AND DATE
DESIGNED	REVIEWED:
CHECKED	DES. CONST.
	SDOT PROJ. MGR.
DRAWN	RECEIVED
CHECKED	REVISED AS BUILT

ALL WORK SHALL BE DONE IN ACCORDANCE WITH THE CITY OF SEATTLE STANDARD PLANS AND SPECIFICATIONS AND OTHER DOCUMENTS CALLED FOR IN SECTION 0-02.3 OF THE PROJECT MANUAL.

PATRICK J. MURPHY — STATE OF WASHINGTON — 27456 — REGISTERED PROFESSIONAL ENGINEER

Seattle Public Utilities
City of Seattle
Ray Hoffman, Director
ORDINANCE NO. APPROVED
FUND:
SCALE: H. 1"=20', V. 1"=10' INSPECTOR'S BOOK

52ND AVE S CSO REDUCTION & LOWER MAPES CREEK RESTORATION

JOB NO. PC C311054 R/W CO
VAULT PLAN NO. 774–889
SHEET 16 OF 53

P:\Project\C311054-Lower Mapes Creek Restoration\04-Design\A-Plot_Files\16 C311054-P-STRM-Sections1.dwg
jonesjc Sep-06-12 3:07pm

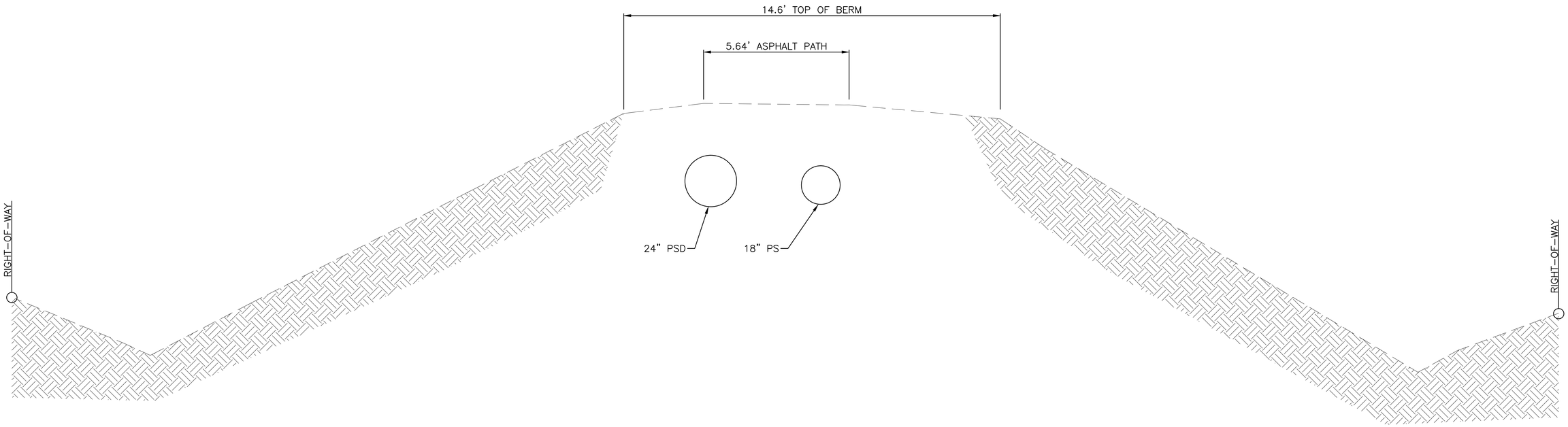

SECTION E-E 14
SCALE: 1" = 2'

VAULT SERIAL NO.	DATE	MARK	NATURE REVISIONS
35668			

REV'D	CHK'D	MADE

P:\Project\C311054-Lower Mapes Creek Restoration\04-Design\A-Plot_Files\17 C311054-P-STRM-Section2.dwg
jonesjc Sep-06-12 3:07pm

60% COMPLETE SIP
(NOT FOR CONSTRUCTION)

APPROVED FOR ADVERTISING
NANCY LOCKE
DEPARTMENT OF FINANCE & ADMINISTRATIVE SERVICES
SEATTLE, WASHINGTON 20

BY:
PURCHASING & CONTRACTING SERVICES DIRECTOR

NAME OR INITIALS AND DATE	INITIALS AND DATE
DESIGNED	REVIEWED:
CHECKED	DES. CONST.
	SDOT PROJ. MGR.
DRAWN	RECEIVED
CHECKED	REVISED AS BUILT

ALL WORK SHALL BE DONE IN ACCORDANCE WITH THE CITY OF SEATTLE STANDARD PLANS AND SPECIFICATIONS AND OTHER DOCUMENTS CALLED FOR IN SECTION 0-02.3 OF THE PROJECT MANUAL.

PATRICK J. MURPHY
STATE OF WASHINGTON
27456
REGISTERED
PROFESSIONAL ENGINEER

Seattle Public Utilities
City of Seattle
Ray Hoffman, Director

ORDINANCE NO.
FUND:
SCALE: AS NOTED
APPROVED
INSPECTOR'S BOOK

52ND AVE S GRADING SECTION

52ND AVE S CSO REDUCTION & LOWER MAPES CREEK RESTORATION

JOB NO: PC C311054 R/W CO
VAULT PLAN NO. 774-889
SHEET 17 OF 53

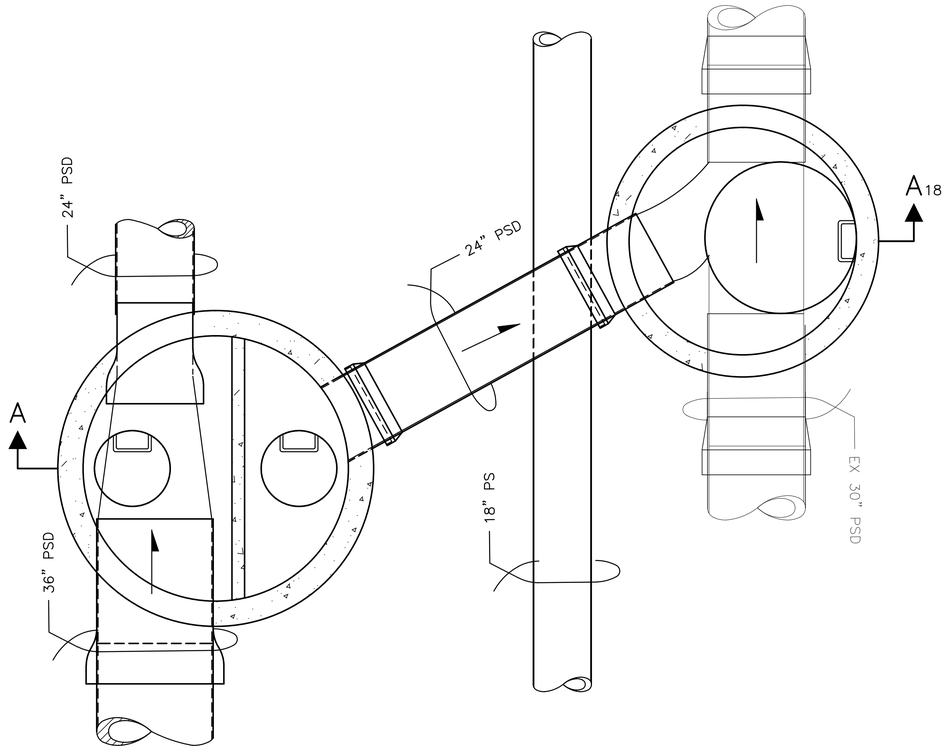

PSD MH–13
207B MODIFIED

PSD MH–14
206A

PSD CONNECTION DETAIL PLAN 1/14
SCALE: 1" = 2'

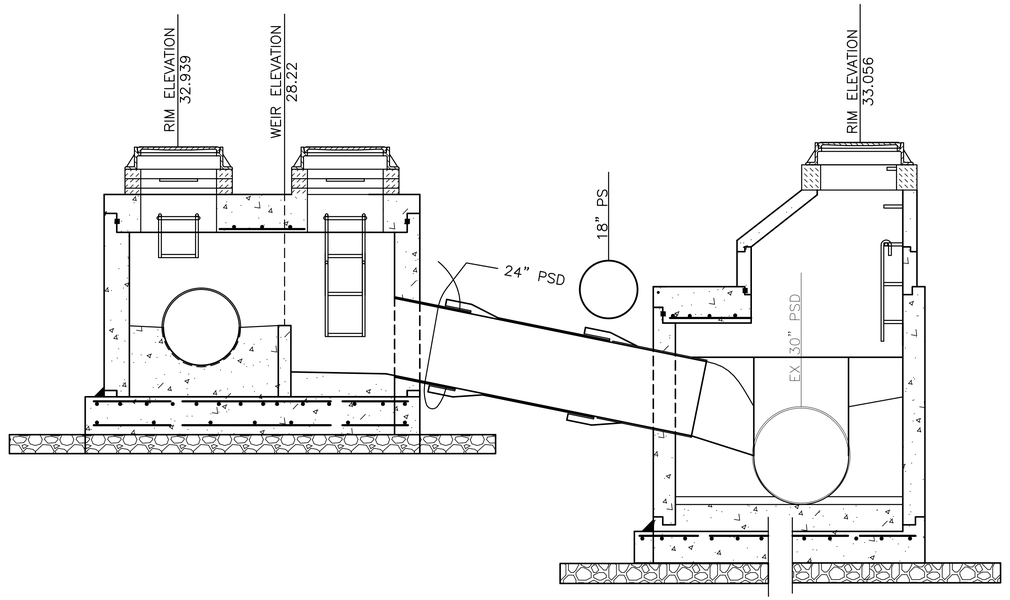

PSD MH–13
207B MODIFIED

PSD MH–14
206A

SECTION A–A 18
SCALE: 1" = 2'

VAULT SERIAL NO.	DATE	MARK	NATURE REVISIONS	MADE	CHK'D	REV'D
35668						

P:\Project\C311054-Lower Mapes Creek Restoration\04-Design\A-Plot_Files\18 C311054-P-STRM-DETL1.dwg
jonesjc Sep-06-12 3:07pm

60% COMPLETE SIP
(NOT FOR CONSTRUCTION)

PSD CONNECTION DETAIL

APPROVED FOR ADVERTISING
NANCY LOCKE
DEPARTMENT OF FINANCE & ADMINISTRATIVE SERVICES
SEATTLE, WASHINGTON 20
BY:
PURCHASING & CONTRACTING SERVICES DIRECTOR

NAME OR INITIALS AND DATE	INITIALS AND DATE
DESIGNED	REVIEWED:
CHECKED	DES. CONST.
	SDOT PROJ. MGR.
DRAWN	RECEIVED
CHECKED	REVISED AS BUILT

ALL WORK SHALL BE DONE IN ACCORDANCE WITH THE CITY OF SEATTLE STANDARD PLANS AND SPECIFICATIONS AND OTHER DOCUMENTS CALLED FOR IN SECTION 0-02.3 OF THE PROJECT MANUAL.

PATRICK J. MURRAY STATE OF WASHINGTON 27456 REGISTERED PROFESSIONAL ENGINEER

Seattle Public Utilities
City of Seattle
Ray Hoffman, Director

ORDINANCE NO. APPROVED
FUND:
SCALE: AS NOTED INSPECTOR'S BOOK

52ND AVE S CSO REDUCTION & LOWER MAPES CREEK RESTORATION

JOB NO. PC C311054 R/W CO
VAULT PLAN NO. 774–889
SHEET 18 OF 53

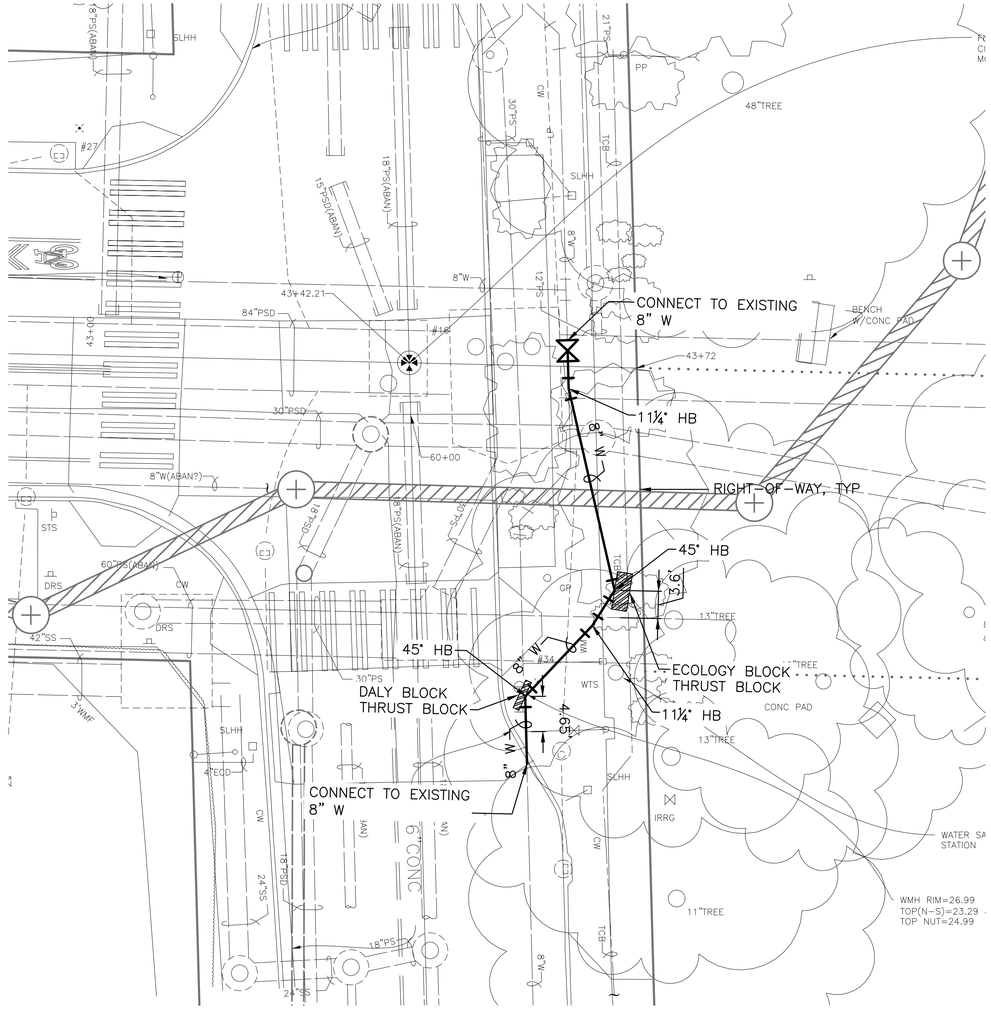

60% COMPLETE SIP
(NOT FOR CONSTRUCTION)

WATER MAIN PLAN

VAULT SERIAL NO.	DATE	MARK	NATURE REVISIONS	MADE	CHK'D	REV'D
35668						

APPROVED FOR ADVERTISING
NANCY LOCKE
DEPARTMENT OF FINANCE & ADMINISTRATIVE SERVICES
SEATTLE, WASHINGTON 20

BY:
PURCHASING & CONTRACTING SERVICES DIRECTOR

NAME OR INITIALS AND DATE	INITIALS AND DATE
DESIGNED	REVIEWED:
CHECKED	DES. CONST.
	SDOT PROJ. MGR.
DRAWN	RECEIVED
CHECKED	REVISED AS BUILT

ALL WORK SHALL BE DONE IN ACCORDANCE WITH THE CITY OF SEATTLE STANDARD PLANS AND SPECIFICATIONS AND OTHER DOCUMENTS CALLED FOR IN SECTION 0-02.3 OF THE PROJECT MANUAL.

PATRICK J. MURPHY
STATE OF WASHINGTON
27456
REGISTERED PROFESSIONAL ENGINEER

Seattle Public Utilities
City of Seattle
Ray Hoffman, Director

ORDINANCE NO. APPROVED
FUND:
SCALE: 1" = 10' INSPECTOR'S BOOK

52ND AVE S CSO REDUCTION & LOWER MAPES CREEK RESTORATION

JOB NO. PC C311054 R/W CO
VAULT PLAN NO. 774-889
SHEET 19 OF 53

P:\Project\C311054-Lower Mapes Creek Restoration\04-Design\A-Plot_Files\19 C311054-P-WATR.dwg
jonesjc Sep-06-12 3:07pm

SW 1/4 SEC. 35, TWP. 24 N., RGE. 4 E.

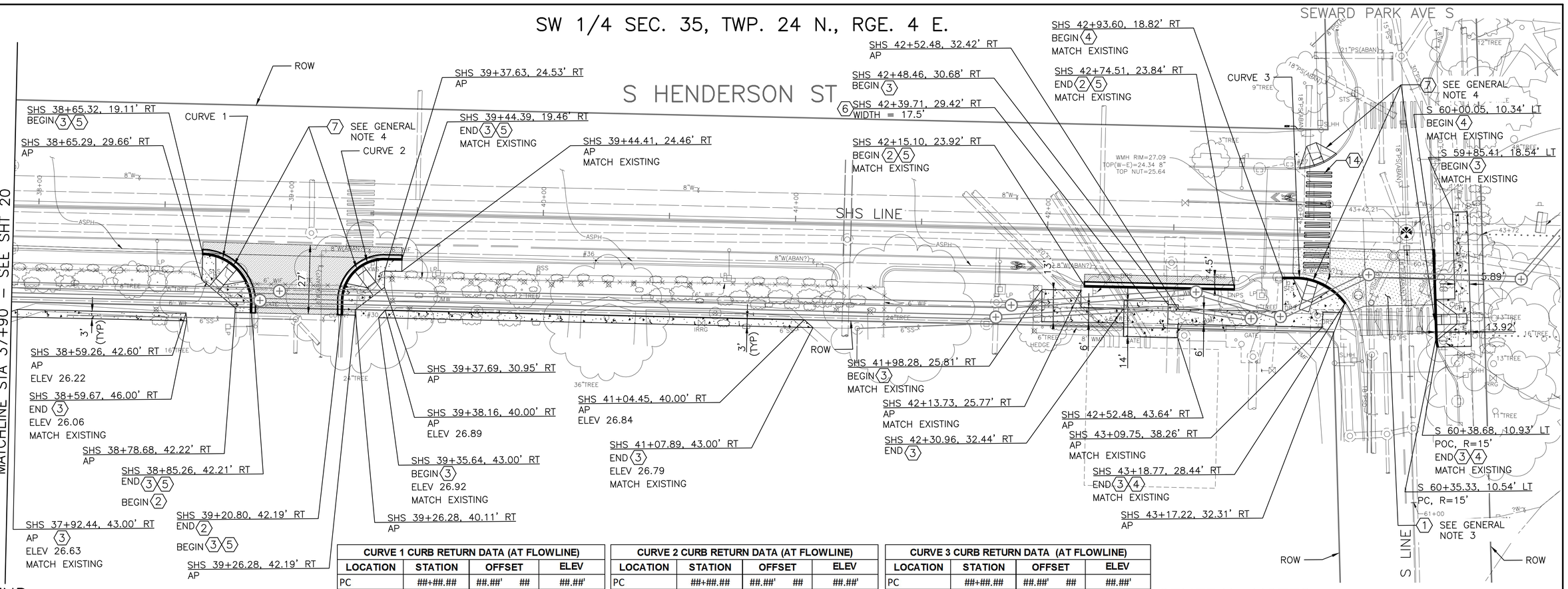

LEGEND:

UNLESS OTHERWISE NOTED:

PAVEMENT:

- TYPE 402A — 12" CEMENT CONCRETE CL 6.5 (1–1/2"), OVER 6" MINERAL AGGREGATE TYPE 2
- TYPE 402C — 2" HMA (CL 1/2") PG 64–22, OVER 7" HMA (CL 1") PG 64–22, OVER 6" MINERAL AGGREGATE TYPE 2
- PERMEABLE TRAIL (TO BE DESIGNED AT 90%) X" POROUS PAVEMENT X" BASE MATERIAL

CURB RAMP:

- TYPE 422A
- TYPE 422B

CURB AND GUTTER, CEMENT CONCRETE PER CITY OF SEATTLE STANDARD PLAN NO. 410, TYPE 410B

CURB, CEMENT CONCRETE PER CITY OF SEATTLE STANDARD PLAN NO. 410, TYPE 410C

SIDEWALK, CEMENT CONCRETE PER CITY OF SEATTLE STANDARD PLAN NO. 420

CURVE 1 CURB RETURN DATA (AT FLOWLINE)

LOCATION	STATION	OFFSET	ELEV
PC	##+##.##	##.##' ##	##.##'
1/4	##+##.##	##.##' ##	##.##'
1/2	##+##.##	##.##' ##	##.##'
3/4	##+##.##	##.##' ##	##.##'
PT	##+##.##	##.##' ##	##.##'
DELTA	##°##'##.##"		
R	20.00'		
T	##.##'		
L	##.##'		

CURVE 2 CURB RETURN DATA (AT FLOWLINE)

LOCATION	STATION	OFFSET	ELEV
PC	##+##.##	##.##' ##	##.##'
1/4	##+##.##	##.##' ##	##.##'
1/2	##+##.##	##.##' ##	##.##'
3/4	##+##.##	##.##' ##	##.##'
PT	##+##.##	##.##' ##	##.##'
DELTA	##°##'##.##"		
R	17.00'		
T	##.##'		
L	##.##'		

CURVE 3 CURB RETURN DATA (AT FLOWLINE)

LOCATION	STATION	OFFSET	ELEV
PC	##+##.##	##.##' ##	##.##'
1/4	##+##.##	##.##' ##	##.##'
1/2	##+##.##	##.##' ##	##.##'
3/4	##+##.##	##.##' ##	##.##'
PT	##+##.##	##.##' ##	##.##'
DELTA	##°##'##.##"		
R	25.00'		
T	##.##'		
L	##.##'		

CONSTRUCTION NOTES

1. 12" PAVEMENT, CEMENT CONCRETE CL 6.5 (1–1/2") OVER 6" MINERAL AGGREGATE TYPE 2, TYPE 402A, PER CITY OF SEATTLE STANDARD PLAN NO. 402.
2. 2" PAVEMENT, HMA (CL 1/2") PG 64–22, OVER 7" HMA (CL 1"), OVER 6" MINERAL AGGREGATE TYPE 2, TYPE 402C, PER CITY OF SEATTLE STANDARD PLAN NO. 402.
3. SIDEWALK, CEMENT CONCRETE, PER CITY OF SEATTLE STANDARD PLAN NO. 420.
4. CURB, CEMENT CONCRETE, TYPE 410C, HT=6" UNLESS NOTED OTHERWISE, PER CITY OF SEATTLE STANDARD PLAN NO. 410.
5. CURB AND GUTTER, CEMENT CONCRETE, TYPE 410B, HT=6" UNLESS NOTED OTHERWISE, PER CITY OF SEATTLE STANDARD PLAN NO. 410.
6. COMMERCIAL DRIVEWAY, CEMENT CONCRETE, (8"), TYPE 430A, PER CITY OF SEATTLE STANDARD PLAN NO. 430.
7. PERPENDICULAR CURB RAMP, TYPE 422A, PER CITY OF SEATTLE STANDARD PLAN NO. 422A.
8. PARALLEL CURB RAMP, TYPE 422B, PER CITY OF SEATTLE STANDARD PLAN NO. 422B.
9. PERMEABLE TRAIL (TO BE DESIGNED AT 90%)
10. REMOVABLE WOOD BOLLARD, PER CITY OF SEATTLE STANDARD PLAN NO. 463.
11. SIDEWALK WITH MONOLITHIC CURB, PER CITY OF SEATTLE STANDARD PLAN NO. 421.
12. SHORT WALL, SEE XXX.
13. CURB, EXTRUDED ASPHALT, HT=6" UNLESS OTHERWISE NOTED, PER CITY OF SEATTLE STANDARD PLAN NO. 412.
14. CROSSWALK, 10' WIDE, L–8T. INSTALL IN EXISTING LOCATION.

GENERAL NOTES

1. CALLOUTS AND DIMENSIONS ARE TO FACE OF CURB UNLESS OTHERWISE NOTED.
2. DRIVEWAY STATIONS SHOWN ARE TO THE CENTER OF DRIVEWAY.
3. FOR JOINTING PLAN, SEE PAVING DETAILS (SHEET 23).
4. FOR CURB RAMP DETAILS, SEE PAVING DETAILS (SHEETS 23 & 24).
5. ALL REMOVED FENCING IS TO BE STORED AND REINSTALLED IN EXISTING LOCATIONS. FOR FENCING REMOVAL, SEE TESC, DEMOLITION, REMOVAL & PROTECTION PLANS (SHEETS 4 – 6).
6. ALL PAVEMENT AND SIDEWALKS SHALL MATCH EXISTING CROSS–SLOPES AND DRAINAGE PATTERNS, UNLESS SHOWN OTHERWISE. PER CITY OF SEATTLE STANDARD PLAN NO. 420, MAXIMUM SIDEWALK SLOPE IS 2%.
7. FOR LANDSCAPE RESTORATION, SEE LANDSCAPE PLANS.
8. FOR 53RD AVE S DETAIL, SEE DETAIL #20.

N

20 10 0 20 40

SCALE IN FEET

60% COMPLETE SIP
(NOT FOR CONSTRUCTION)

PAVING RESTORATION PLAN (1 OF 4)

CH2MHILL

APPROVED FOR ADVERTISING
NANCY LOCKE
DEPARTMENT OF FINANCE & ADMINISTRATIVE SERVICES
SEATTLE, WASHINGTON 20
BY:
PURCHASING & CONTRACTING SERVICES DIRECTOR

NAME OR INITIALS AND DATE	INITIALS AND DATE
DESIGNED	REVIEWED:
CHECKED	DES. CONST.
	SDOT PROJ. MGR.
DRAWN	RECEIVED
CHECKED	REVISED AS BUILT

ALL WORK SHALL BE DONE IN ACCORDANCE WITH THE CITY OF SEATTLE STANDARD PLANS AND SPECIFICATIONS AND OTHER DOCUMENTS CALLED FOR IN SECTION 0–02.3 OF THE PROJECT MANUAL.

STEPHANIE SARA EASTMAN — STATE OF WASHINGTON — REGISTERED PROFESSIONAL ENGINEER

Seattle Public Utilities
City of Seattle
Ray Hoffman, Director
ORDINANCE NO. APPROVED
FUND:
SCALE: H. 1"=20', V. 1"=10' INSPECTOR'S BOOK

52ND AVE S CSO REDUCTION & LOWER MAPES CREEK RESTORATION

JOB NO. PC C311054 R/W CO
VAULT PLAN NO. 774–889
SHEET 20 OF 53

NO.	DATE	MARK	NATURE REVISIONS	MADE	CHK'D	REV'D

VAULT SERIAL NO. 35668

P:\Project\C311054–Lower Mapes Creek Restoration\04–Design\A–Plot_Files\CH2MHill\20 C311054–P–ROAD – 1 of 4.dwg
jonesjc Sep–06–12 3:07pm

SW 1/4 SEC. 35, TWP. 24 N., RGE. 4 E.

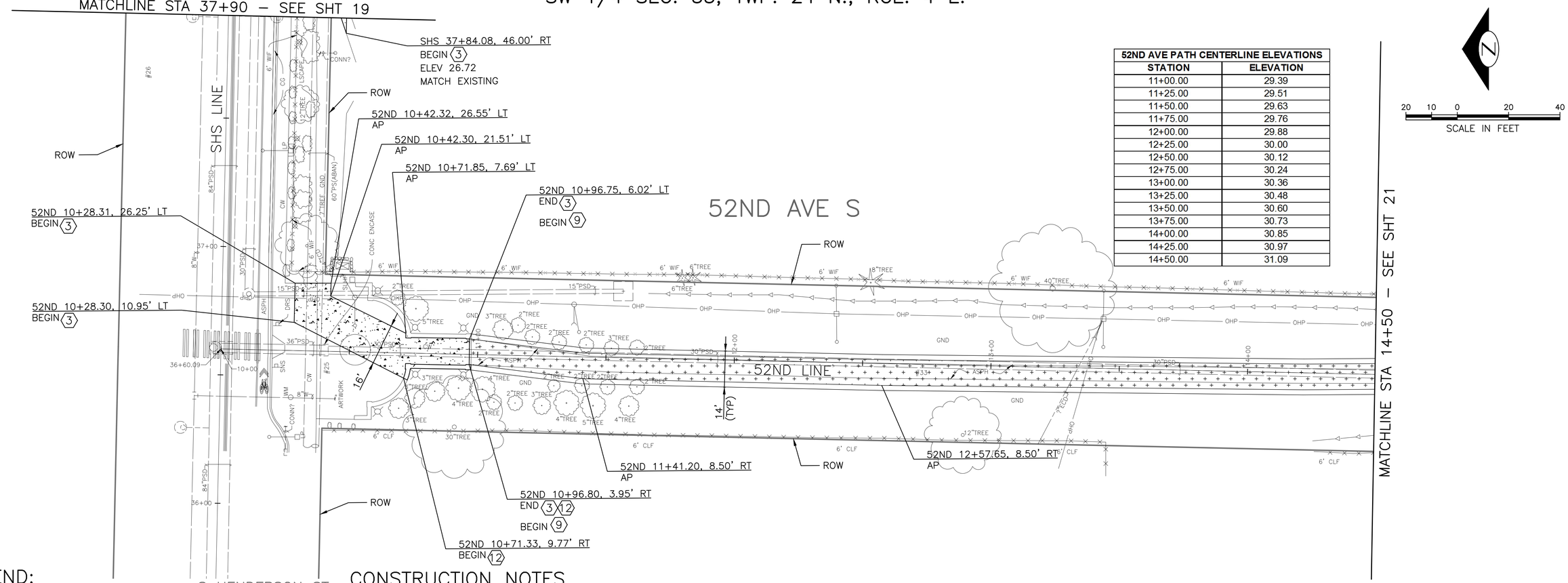

52ND AVE PATH CENTERLINE ELEVATIONS	
STATION	ELEVATION
11+00.00	29.39
11+25.00	29.51
11+50.00	29.63
11+75.00	29.76
12+00.00	29.88
12+25.00	30.00
12+50.00	30.12
12+75.00	30.24
13+00.00	30.36
13+25.00	30.48
13+50.00	30.60
13+75.00	30.73
14+00.00	30.85
14+25.00	30.97
14+50.00	31.09

LEGEND:

UNLESS OTHERWISE NOTED:

PAVEMENT:
- TYPE 402A — 12" CEMENT CONCRETE CL 6.5 (1–1/2"), OVER 6" MINERAL AGGREGATE TYPE 2
- TYPE 402C — 2" HMA (CL 1/2") PG 64–22, OVER 7" HMA (CL 1") PG 64–22, OVER 6" MINERAL AGGREGATE TYPE 2
- PERMEABLE TRAIL (TO BE DESIGNED AT 90%) X" POROUS PAVEMENT, X" BASE MATERIAL

CURB RAMP:
- TYPE 422A
- TYPE 422B

CURB AND GUTTER, CEMENT CONCRETE PER CITY OF SEATTLE STANDARD PLAN NO. 410, TYPE 410B

CURB, CEMENT CONCRETE PER CITY OF SEATTLE STANDARD PLAN NO. 410, TYPE 410C

SIDEWALK, CEMENT CONCRETE PER CITY OF SEATTLE STANDARD PLAN NO. 420

60% COMPLETE SIP
(NOT FOR CONSTRUCTION)

CONSTRUCTION NOTES

1. 12" PAVEMENT, CEMENT CONCRETE CL 6.5 (1–1/2") OVER 6" MINERAL AGGREGATE TYPE 2, TYPE 402A, PER CITY OF SEATTLE STANDARD PLAN NO. 402.
2. 2" PAVEMENT, HMA (CL 1/2") PG 64–22, OVER 7" HMA (CL 1"), OVER 6" MINERAL AGGREGATE TYPE 2, TYPE 402C, PER CITY OF SEATTLE STANDARD PLAN NO. 402.
3. SIDEWALK, CEMENT CONCRETE, PER CITY OF SEATTLE STANDARD PLAN NO. 420.
4. CURB, CEMENT CONCRETE, TYPE 410C, HT=6" UNLESS NOTED OTHERWISE, PER CITY OF SEATTLE STANDARD PLAN NO. 410.
5. CURB AND GUTTER, CEMENT CONCRETE, TYPE 410B, HT=6" UNLESS NOTED OTHERWISE, PER CITY OF SEATTLE STANDARD PLAN NO. 410.
6. COMMERCIAL DRIVEWAY, CEMENT CONCRETE, (8"), TYPE 430A, PER CITY OF SEATTLE STANDARD PLAN NO. 430.
7. PERPENDICULAR CURB RAMP, TYPE 422A, PER CITY OF SEATTLE STANDARD PLAN NO. 422A.
8. PARALLEL CURB RAMP, TYPE 422B, PER CITY OF SEATTLE STANDARD PLAN NO. 422B.
9. PERMEABLE TRAIL (TO BE DESIGNED AT 90%)
10. REMOVABLE WOOD BOLLARD, PER CITY OF SEATTLE STANDARD PLAN NO. 463.
11. SIDEWALK WITH MONOLITHIC CURB, PER CITY OF SEATTLE STANDARD PLAN NO. 421.
12. SHORT WALL, SEE XXX.
13. CURB, EXTRUDED ASPHALT, HT=6" UNLESS OTHERWISE NOTED, PER CITY OF SEATTLE STANDARD PLAN NO. 412.
14. CROSSWALK, 10' WIDE, L–8T. INSTALL IN EXISTING LOCATION.

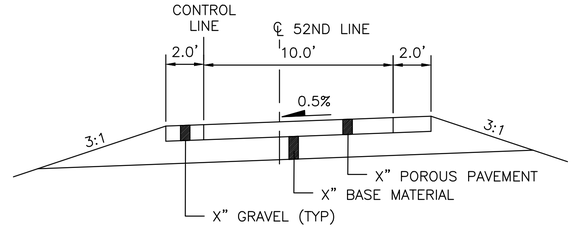

52ND AVE S PATH SECTION (1) — SCALE: NTS

TO BE DESIGNED AT 90%

53RD AVE S PAVEMENT DETAIL (2/19) — SCALE: NTS

GENERAL NOTES

1. CALLOUTS AND DIMENSIONS ARE TO FACE OF CURB UNLESS OTHERWISE NOTED.
2. DRIVEWAY STATIONS SHOWN ARE TO THE CENTER OF DRIVEWAY.
3. FOR JOINTING PLAN, SEE PAVING DETAILS (SHEET 23).
4. FOR CURB RAMP DETAILS, SEE PAVING DETAILS (SHEETS 23 & 24).
5. ALL REMOVED FENCING IS TO BE STORED AND REINSTALLED IN EXISTING LOCATIONS. FOR FENCING REMOVAL, SEE TESC, DEMOLITION, REMOVAL & PROTECTION PLANS (SHEETS 4 – 6).
6. ALL PAVEMENT AND SIDEWALKS SHALL MATCH EXISTING CROSS–SLOPES AND DRAINAGE PATTERNS, UNLESS SHOWN OTHERWISE. PER CITY OF SEATTLE STANDARD PLAN NO. 420, MAXIMUM SIDEWALK SLOPE IS 2%.
7. FOR LANDSCAPE RESTORATION, SEE LANDSCAPE PLANS.

PAVING RESTORATION PLAN (2 OF 4)

CH2MHILL

APPROVED FOR ADVERTISING
NANCY LOCKE
DEPARTMENT OF FINANCE & ADMINISTRATIVE SERVICES
SEATTLE, WASHINGTON 20
BY:
PURCHASING & CONTRACTING SERVICES DIRECTOR

NAME OR INITIALS AND DATE
DESIGNED
CHECKED
DRAWN
CHECKED

INITIALS AND DATE
REVIEWED:
DES. CONST.
SDOT PROJ. MGR.
RECEIVED
REVISED AS BUILT

ALL WORK SHALL BE DONE IN ACCORDANCE WITH THE CITY OF SEATTLE STANDARD PLANS AND SPECIFICATIONS AND OTHER DOCUMENTS CALLED FOR IN SECTION 0–02.3 OF THE PROJECT MANUAL.

SUKHAN SARA FREEMAN — STATE OF WASHINGTON — REGISTERED PROFESSIONAL ENGINEER

Seattle Public Utilities
City of Seattle
Ray Hoffman, Director
ORDINANCE NO. APPROVED
FUND:
SCALE: H. 1"=20', V. 1"=10' INSPECTOR'S BOOK

52ND AVE S CSO REDUCTION & LOWER MAPES CREEK RESTORATION

JOB NO. PC C311054 R/W CO
VAULT PLAN NO. 774–889
SHEET 21 OF 53

MARK	DATE	NATURE REVISIONS	MADE	CHK'D	REV'D

VAULT SERIAL NO. 35668

P:\Project\C311054–Lower Mapes Creek Restoration\04–Design\A–Plot_Files\CH2MHill\21 C311054–P–ROAD – 2 of 4.dwg
jonesjc Sep–06–12 3:08pm

SW 1/4 SEC. 35, TWP. 24 N., RGE. 4 E.

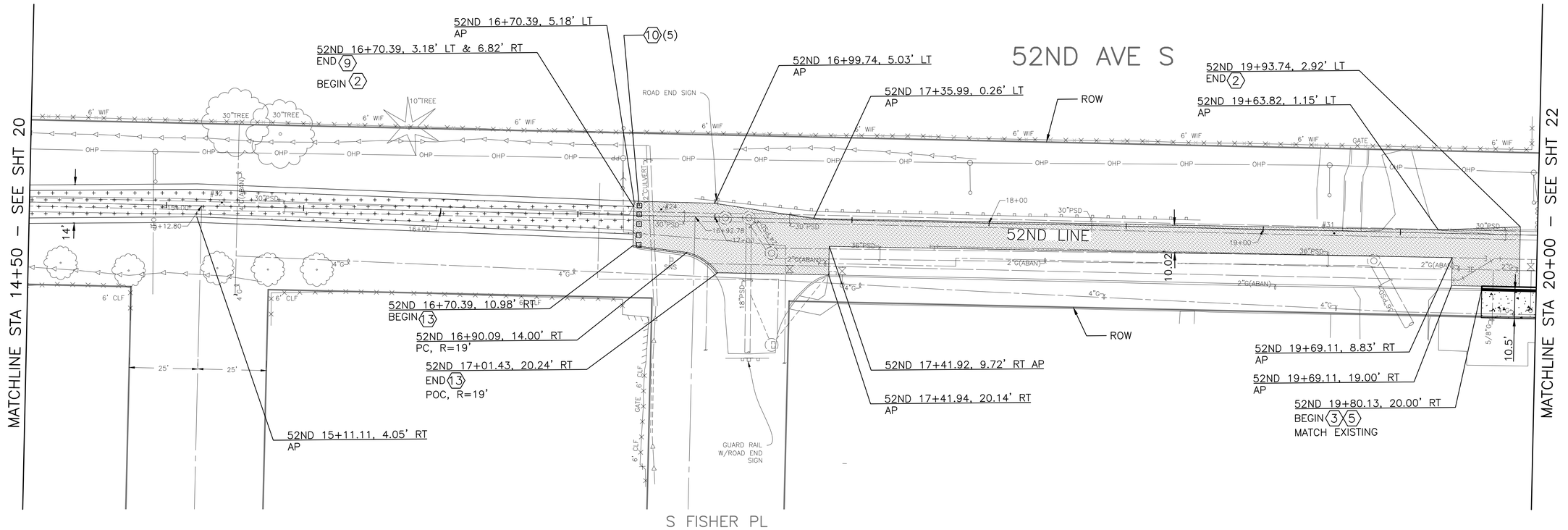

LEGEND:

UNLESS OTHERWISE NOTED:

PAVEMENT:
- TYPE 402A — 12" CEMENT CONCRETE CL 6.5 (1–1/2"), OVER 6" MINERAL AGGREGATE TYPE 2
- TYPE 402C — 2" HMA (CL 1/2") PG 64–22, OVER 7" HMA (CL 1") PG 64–22, OVER 6" MINERAL AGGREGATE TYPE 2
- PERMEABLE TRAIL (TO BE DESIGNED AT 90%) X" POROUS PAVEMENT X" BASE MATERIAL

CURB RAMP:
- TYPE 422A
- TYPE 422B

CURB AND GUTTER, CEMENT CONCRETE PER CITY OF SEATTLE STANDARD PLAN NO. 410, TYPE 410B

CURB, CEMENT CONCRETE PER CITY OF SEATTLE STANDARD PLAN NO. 410, TYPE 410C

SIDEWALK, CEMENT CONCRETE PER CITY OF SEATTLE STANDARD PLAN NO. 420

CONSTRUCTION NOTES

1. 12" PAVEMENT, CEMENT CONCRETE CL 6.5 (1–1/2") OVER 6" MINERAL AGGREGATE TYPE 2, TYPE 402A, PER CITY OF SEATTLE STANDARD PLAN NO. 402.
2. 2" PAVEMENT, HMA (CL 1/2") PG 64–22, OVER 7" HMA (CL 1"), OVER 6" MINERAL AGGREGATE TYPE 2, TYPE 402C, PER CITY OF SEATTLE STANDARD PLAN NO. 402.
3. SIDEWALK, CEMENT CONCRETE, PER CITY OF SEATTLE STANDARD PLAN NO. 420.
4. CURB, CEMENT CONCRETE, TYPE 410C, HT=6" UNLESS NOTED OTHERWISE, PER CITY OF SEATTLE STANDARD PLAN NO. 410.
5. CURB AND GUTTER, CEMENT CONCRETE, TYPE 410B, HT=6" UNLESS NOTED OTHERWISE, PER CITY OF SEATTLE STANDARD PLAN NO. 410.
6. COMMERCIAL DRIVEWAY, CEMENT CONCRETE, (8"), TYPE 430A, PER CITY OF SEATTLE STANDARD PLAN NO. 430.
7. PERPENDICULAR CURB RAMP, TYPE 422A, PER CITY OF SEATTLE STANDARD PLAN NO. 422A.
8. PARALLEL CURB RAMP, TYPE 422B, PER CITY OF SEATTLE STANDARD PLAN NO. 422B.
9. PERMEABLE TRAIL (TO BE DESIGNED AT 90%)
10. REMOVABLE WOOD BOLLARD, PER CITY OF SEATTLE STANDARD PLAN NO. 463.
11. SIDEWALK WITH MONOLITHIC CURB, PER CITY OF SEATTLE STANDARD PLAN NO. 421.
12. SHORT WALL, SEE XXX.
13. CURB, EXTRUDED ASPHALT, HT=6" UNLESS OTHERWISE NOTED, PER CITY OF SEATTLE STANDARD PLAN NO. 412.
14. CROSSWALK, 10' WIDE, L–8T. INSTALL IN EXISTING LOCATION.

52ND AVE PATH CENTERLINE ELEVATIONS	
STATION	ELEVATION
14+75.00	30.32
15+00.00	30.47
15+25.00	30.79
15+50.00	31.22
15+75.00	31.67
16+00.00	31.91
16+25.00	32.01
16+50.00	32.06

GENERAL NOTES

1. CALLOUTS AND DIMENSIONS ARE TO FACE OF CURB UNLESS OTHERWISE NOTED.
2. DRIVEWAY STATIONS SHOWN ARE TO THE CENTER OF DRIVEWAY.
3. FOR JOINTING PLAN, SEE PAVING DETAILS (SHEET 23).
4. FOR CURB RAMP DETAILS, SEE PAVING DETAILS (SHEETS 23 & 24).
5. ALL REMOVED FENCING IS TO BE STORED AND REINSTALLED IN EXISTING LOCATIONS. FOR FENCING REMOVAL, SEE TESC, DEMOLITION, REMOVAL & PROTECTION PLANS (SHEETS 4 – 6).
6. ALL PAVEMENT AND SIDEWALKS SHALL MATCH EXISTING CROSS–SLOPES AND DRAINAGE PATTERNS, UNLESS SHOWN OTHERWISE. PER CITY OF SEATTLE STANDARD PLAN NO. 420, MAXIMUM SIDEWALK SLOPE IS 2%.
7. FOR LANDSCAPE RESTORATION, SEE LANDSCAPE PLANS.

N

20 10 0 20 40
SCALE IN FEET

60% COMPLETE SIP
(NOT FOR CONSTRUCTION)

PAVING RESTORATION PLAN (3 OF 4)

NO.	NATURE REVISIONS	MADE	CHK'D	REV'D

VAULT SERIAL NO.	DATE	MARK
35668		

CH2MHILL

APPROVED FOR ADVERTISING
NANCY LOCKE
DEPARTMENT OF FINANCE & ADMINISTRATIVE SERVICES
SEATTLE, WASHINGTON 20
BY:
PURCHASING & CONTRACTING SERVICES DIRECTOR

NAME OR INITIALS AND DATE	INITIALS AND DATE
DESIGNED	REVIEWED:
CHECKED	DES. CONST.
	SDOT PROJ. MGR.
DRAWN	RECEIVED
CHECKED	REVISED AS BUILT

ALL WORK SHALL BE DONE IN ACCORDANCE WITH THE CITY OF SEATTLE STANDARD PLANS AND SPECIFICATIONS AND OTHER DOCUMENTS CALLED FOR IN SECTION 0–02.3 OF THE PROJECT MANUAL.

STEPHANIE SARA LOGAN — STATE OF WASHINGTON — REGISTERED PROFESSIONAL ENGINEER

Seattle Public Utilities
City of Seattle
Ray Hoffman, Director
ORDINANCE NO. APPROVED
FUND:
SCALE: H. 1"=20', V. 1"=10' INSPECTOR'S BOOK

52ND AVE S CSO REDUCTION & LOWER MAPES CREEK RESTORATION

JOB NO.	PC C311054
	R/W
	CO
VAULT PLAN NO.	774–889
SHEET	22 OF 53

P:\Project\C311054–Lower Mapes Creek Restoration\04–Design\A–Plot_Files\CH2MHill\22 C311054–P–ROAD – 3 OF 4.dwg
jonesjc Sep–06–12 3:08pm

SW 1/4 SEC. 35, TWP. 24 N., RGE. 4 E.

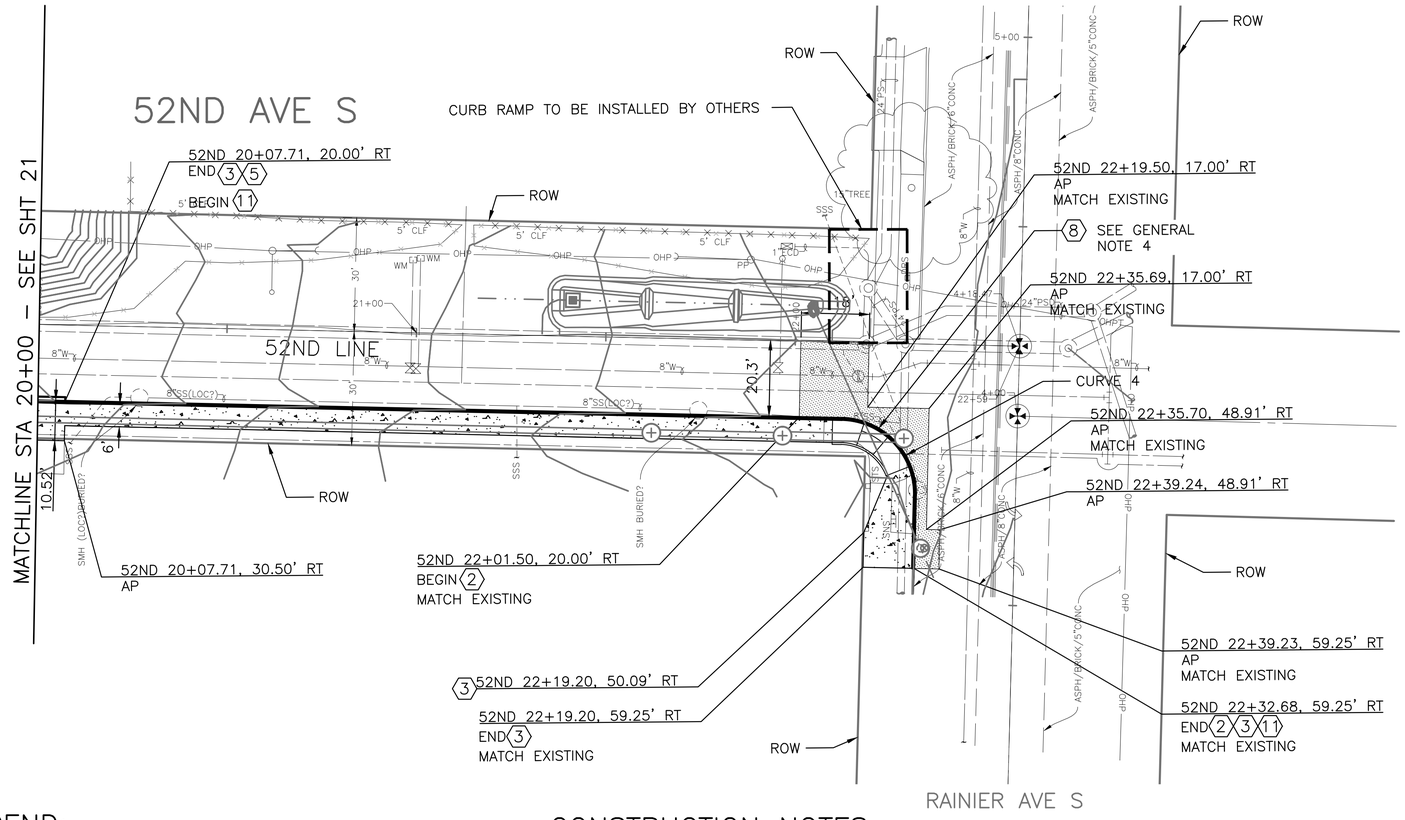

LEGEND:

UNLESS OTHERWISE NOTED:

PAVEMENT: TYPE 402A
12" CEMENT CONCRETE CL 6.5 (1–1/2"), OVER 6" MINERAL AGGREGATE TYPE 2

TYPE 402C
2" HMA (CL 1/2") PG 64–22, OVER 7" HMA (CL 1") PG 64–22, OVER 6" MINERAL AGGREGATE TYPE 2

PERMEABLE TRAIL (TO BE DESIGNED AT 90%)
X" POROUS PAVEMENT
X" BASE MATERIAL

CURB RAMP: TYPE 422A

TYPE 422B

CURB AND GUTTER, CEMENT CONCRETE PER CITY OF SEATTLE STANDARD PLAN NO. 410, TYPE 410B

CURB, CEMENT CONCRETE PER CITY OF SEATTLE STANDARD PLAN NO. 410, TYPE 410C

SIDEWALK, CEMENT CONCRETE PER CITY OF SEATTLE STANDARD PLAN NO. 420

60% COMPLETE SIP
(NOT FOR CONSTRUCTION)

CONSTRUCTION NOTES

(1) 12" PAVEMENT, CEMENT CONCRETE CL 6.5 (1–1/2") OVER 6" MINERAL AGGREGATE TYPE 2, TYPE 402A, PER CITY OF SEATTLE STANDARD PLAN NO. 402.

(2) 2" PAVEMENT, HMA (CL 1/2") PG 64–22, OVER 7" HMA (CL 1"), OVER 6" MINERAL AGGREGATE TYPE 2, TYPE 402C, PER CITY OF SEATTLE STANDARD PLAN NO. 402.

(3) SIDEWALK, CEMENT CONCRETE, PER CITY OF SEATTLE STANDARD PLAN NO. 420.

(4) CURB, CEMENT CONCRETE, TYPE 410C, HT=6" UNLESS NOTED OTHERWISE, PER CITY OF SEATTLE STANDARD PLAN NO. 410.

(5) CURB AND GUTTER, CEMENT CONCRETE, TYPE 410B, HT=6" UNLESS NOTED OTHERWISE, PER CITY OF SEATTLE STANDARD PLAN NO. 410.

(6) COMMERCIAL DRIVEWAY, CEMENT CONCRETE, (8"), TYPE 430A, PER CITY OF SEATTLE STANDARD PLAN NO. 430.

(7) PERPENDICULAR CURB RAMP, TYPE 422A, PER CITY OF SEATTLE STANDARD PLAN NO. 422A.

(8) PARALLEL CURB RAMP, TYPE 422B, PER CITY OF SEATTLE STANDARD PLAN NO. 422B.

PERMEABLE TRAIL (TO BE DESIGNED AT 90%).

REMOVABLE WOOD BOLLARD, PER CITY OF SEATTLE STANDARD PLAN NO. 463.

(11) SIDEWALK WITH MONOLITHIC CURB, PER CITY OF SEATTLE STANDARD PLAN NO. 421.

(12) SHORT WALL, SEE XXX.

(13) CURB, EXTRUDED ASPHALT, HT=6" UNLESS OTHERWISE NOTED, PER CITY OF SEATTLE STANDARD PLAN NO. 412.

(14) CROSSWALK, 10' WIDE, L–8T. INSTALL IN EXISTING LOCATION.

CURVE 4 CURB RETURN DATA (AT FLOWLINE)			
LOCATION	STATION	OFFSET	ELEV
PC	##+##.##	##.##' ##	##.##'
1/4	##+##.##	##.##' ##	##.##'
1/2	##+##.##	##.##' ##	##.##'
3/4	##+##.##	##.##' ##	##.##'
PT	##+##.##	##.##' ##	##.##'
DELTA	##°##'##.##"		
R	20.00'		
T	##.##'		
L	##.##'		

GENERAL NOTES

1. CALLOUTS AND DIMENSIONS ARE TO FACE OF CURB UNLESS OTHERWISE NOTED.
2. DRIVEWAY STATIONS SHOWN ARE TO THE CENTER OF DRIVEWAY.
3. FOR JOINTING PLAN, SEE PAVING DETAILS (SHEET 23).
4. FOR CURB RAMP DETAILS, SEE PAVING DETAILS (SHEETS 23 & 24).
5. ALL REMOVED FENCING IS TO BE STORED AND REINSTALLED IN EXISTING LOCATIONS. FOR FENCING REMOVAL, SEE TESC, DEMOLITION, REMOVAL & PROTECTION PLANS (SHEETS 4 – 6).
6. ALL PAVEMENT AND SIDEWALKS SHALL MATCH EXISTING CROSS–SLOPES AND DRAINAGE PATTERNS, UNLESS SHOWN OTHERWISE. PER CITY OF SEATTLE STANDARD PLAN NO. 420, MAXIMUM SIDEWALK SLOPE IS 2%.
7. FOR LANDSCAPE RESTORATION, SEE LANDSCAPE PLANS.

N

20 10 0 20 40
SCALE IN FEET

PAVING RESTORATION PLAN (4 OF 4)

MARK	DATE	NATURE REVISIONS	MADE	CHK'D	REV'D

VAULT SERIAL NO. 35668

CH2MHILL

APPROVED FOR ADVERTISING
NANCY LOCKE
DEPARTMENT OF FINANCE & ADMINISTRATIVE SERVICES
SEATTLE, WASHINGTON 20
BY:
PURCHASING & CONTRACTING SERVICES DIRECTOR

NAME OR INITIALS AND DATE	INITIALS AND DATE
DESIGNED	REVIEWED:
CHECKED	DES. CONST.
	SDOT PROJ. MGR.
DRAWN	RECEIVED
CHECKED	REVISED AS BUILT

ALL WORK SHALL BE DONE IN ACCORDANCE WITH THE CITY OF SEATTLE STANDARD PLANS AND SPECIFICATIONS AND OTHER DOCUMENTS CALLED FOR IN SECTION 0–02.3 OF THE PROJECT MANUAL.

SUSANNE SARA LOMAN STATE OF WASHINGTON REGISTERED PROFESSIONAL ENGINEER

Seattle Public Utilities
City of Seattle
Ray Hoffman, Director
ORDINANCE NO. APPROVED
FUND:
SCALE: H. 1"=20', V. 1"=10' INSPECTOR'S BOOK

52ND AVE S CSO REDUCTION & LOWER MAPES CREEK RESTORATION

JOB NO. PC C311054 R/W CO
VAULT PLAN NO. 774–889
SHEET 23 OF 53

P:\Project\C311054–Lower Mapes Creek Restoration\04–Design\A–Plot_Files\CH2MHill\23 C311054–P–ROAD – 4 OF 4.dwg
jonesjc Sep–06–12 3:08pm

SW 1/4 SEC. 35, TWP. 24 N., RGE. 4 E.

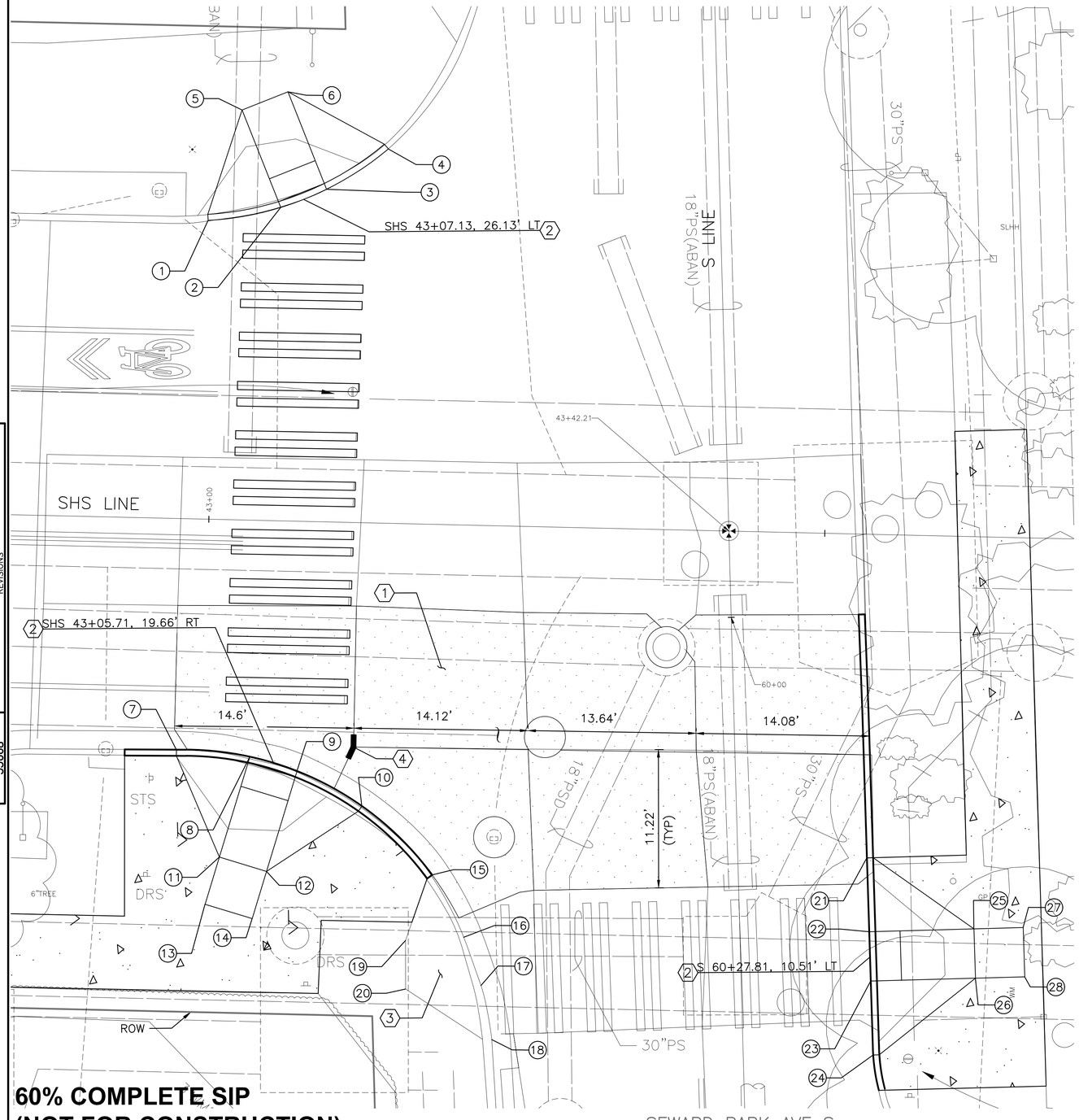

CONSTRUCTION NOTES

12" PAVEMENT, CEMENT CONCRETE CL 6.5 (1–1/2") OVER 6" MINERAL AGGREGATE TYPE 2, TYPE 402A, PER CITY OF SEATTLE STANDARD PLAN NO. 402.

PERPENDICULAR CURB RAMP, TYPE 422A, PER CITY OF SEATTLE STANDARD PLAN NO. 422A.

EXISTING RETROFITTED PERPENDICULAR CURB RAMP.

THROUGH JOINT, PER CITY OF SEATTLE STANDARD PLAN NO. 405D.

GENERAL NOTES

1. CALLOUTS AND DIMENSIONS ARE TO FACE OF CURB UNLESS OTHERWISE NOTED.
2. CURB RAMP CALLOUTS ARE TO CENTER OF CURB RAMP AT FACE OF CURB.
3. ALL JOINTS SHALL BE CONSTRUCTED WITH DOWEL BARS ACCORDING TO CITY OF SEATTLE STANDARD PLAN NO. 405.
4. THE MAXIMUM SPACING FOR TRANSVERSE JOINTS IS 15'–0".
5. TRANSVERSE JOINT SPACING SHALL BE UNIFORM ALONG ROADWAYS AND THROUGH INTERSECTIONS.
6. PANELS SHALL NOT EXCEED THE MAXIMUM SURFACE AREA OF 225 SQ. FT.
7. JOINT INTERSECTION ANGLES LESS THAN 60 DEGREES ARE NOT PERMITTED.
8. FOR JOINT DETAILS AND TYPES, SEE CITY OF SEATTLE STANDARD PLAN NO. 405.
9. TRANSVERSE JOINTS MAY NEED TO BE FIELD ADJUSTED BASED ON UTILITY AND AS–BUILT CONDITIONS.
10. FOR ANGLED JOINTS, PREVENT OVERSAWING INTO ADJACENT SLABS.
11. MANHOLE FRAME & COVER SHALL BE REINFORCED PER CITY OF SEATTLE STANDARD PLAN NO. 406.
12. FOR NEW CEMENT CONCRETE PANELS MATCHING TO EXISTING CEMENT CONCRETE, PAVEMENT MATCH EXISTING JOINT LOCATIONS.

S HENDERSON ST & SEWARD PARK AVE - NW CURB RAMP DATA

POINT	STATION	OFFSET	ELEV	DESCRIPTION
1	##+##.##	##.##' ##	##.##'	TOC - RAMP WING
2	##+##.##	##.##' ##	##.##'	TOC - RAMP BOTTOM
3	##+##.##	##.##' ##	##.##'	TOC - RAMP BOTTOM
4	##+##.##	##.##' ##	##.##'	TOC - RAMP WING
5	##+##.##	##.##' ##	##.##'	BACK OF RAMP
6	##+##.##	##.##' ##	##.##'	BACK OF RAMP

S HENDERSON ST & SEWARD PARK AVE - SW CURB RAMP DATA

POINT	STATION	OFFSET	ELEV	DESCRIPTION
7	##+##.##	##.##' ##	##.##'	TOC - RAMP WING
8	##+##.##	##.##' ##	##.##'	TOC - RAMP BOTTOM
9	##+##.##	##.##' ##	##.##'	TOC - RAMP BOTTOM
10	##+##.##	##.##' ##	##.##'	TOC - RAMP WING
11	##+##.##	##.##' ##	##.##'	BACK OF RAMP
12	##+##.##	##.##' ##	##.##'	BACK OF RAMP
13	##+##.##	##.##' ##	##.##'	RAMP LANDING
14	##+##.##	##.##' ##	##.##'	RAMP LANDING

S HENDERSON ST & SEWARD PARK AVE - EXIST. RETROFITTED SW CURB RAMP DATA

POINT	STATION	OFFSET	EXIST. ELEV	DESCRIPTION
15	##+##.##	##.##' ##	##.##'	TOC - RAMP WING
16	##+##.##	##.##' ##	##.##'	TOC - RAMP BOTTOM
17	##+##.##	##.##' ##	##.##'	TOC - RAMP BOTTOM
18	##+##.##	##.##' ##	##.##'	TOC - RAMP WING
19	##+##.##	##.##' ##	##.##'	BACK OF RAMP
20	##+##.##	##.##' ##	##.##'	BACK OF RAMP

S HENDERSON ST & SEWARD PARK AVE - SE CURB RAMP DATA

POINT	STATION	OFFSET	ELEV	DESCRIPTION
21	##+##.##	##.##' ##	##.##'	TOC - RAMP WING
22	##+##.##	##.##' ##	##.##'	TOC - RAMP BOTTOM
23	##+##.##	##.##' ##	##.##'	TOC - RAMP BOTTOM
24	##+##.##	##.##' ##	##.##'	TOC - RAMP WING
25	##+##.##	##.##' ##	##.##'	BACK OF RAMP
26	##+##.##	##.##' ##	##.##'	BACK OF RAMP
27	##+##.##	##.##' ##	##.##'	RAMP LANDING
28	##+##.##	##.##' ##	##.##'	RAMP LANDING

N

5 2.5 0 5
SCALE IN FEET

60% COMPLETE SIP
(NOT FOR CONSTRUCTION)

PAVING DETAILS (1 OF 2)

NATURE REVISIONS	MADE	CHK'D	REV'D

VAULT SERIAL NO.	MARK	DATE
35668		

P:\Project\C311054-Lower Mapes Creek Restoration\04-Design\A-Plot_Files\CH2MHill\24 C311054-P-ROAD-DETL - DETL.dwg
jonesjc Sep-06-12 3:08pm

CH2MHILL

APPROVED FOR ADVERTISING
NANCY LOCKE
DEPARTMENT OF FINANCE & ADMINISTRATIVE SERVICES
SEATTLE, WASHINGTON 20

BY:
PURCHASING & CONTRACTING SERVICES DIRECTOR

NAME OR INITIALS AND DATE	INITIALS AND DATE
DESIGNED	REVIEWED:
CHECKED	DES. CONST.
	SDOT PROJ. MGR.
DRAWN	RECEIVED
CHECKED	REVISED AS BUILT

ALL WORK SHALL BE DONE IN ACCORDANCE WITH THE CITY OF SEATTLE STANDARD PLANS AND SPECIFICATIONS AND OTHER DOCUMENTS CALLED FOR IN SECTION 0-02.3 OF THE PROJECT MANUAL.

SHAHAMAK SARA KOAMAN
STATE OF WASHINGTON
REGISTERED
PROFESSIONAL ENGINEER

Seattle Public Utilities

City of Seattle
Ray Hoffman, Director

ORDINANCE NO. APPROVED
FUND:
SCALE: H. 1"=20', V. 1"=10' INSPECTOR'S BOOK

52ND AVE S CSO REDUCTION & LOWER MAPES CREEK RESTORATION

JOB NO
PC C311054
R/W
CO
VAULT PLAN NO. 774–889
SHEET 24 OF 53

SW 1/4 SEC. 35, TWP. 24 N., RGE. 4 E.

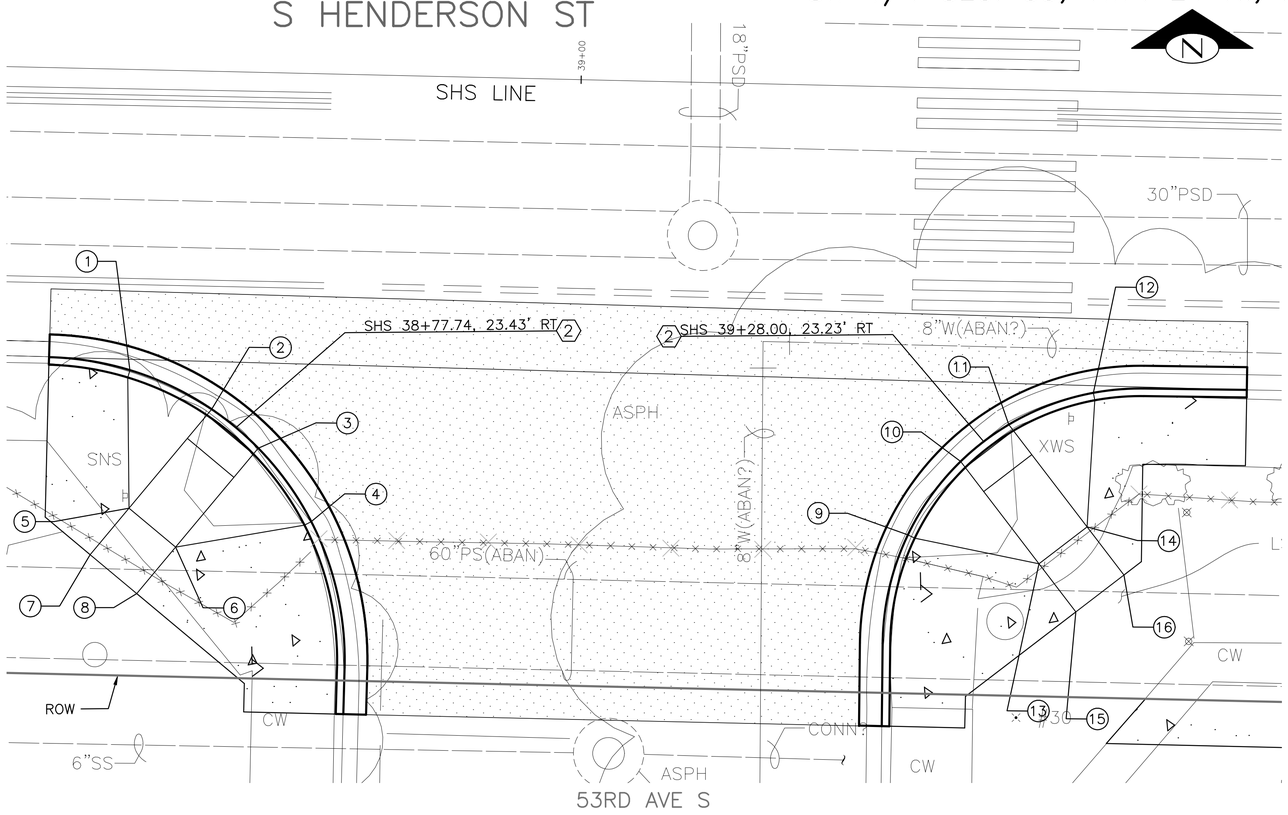

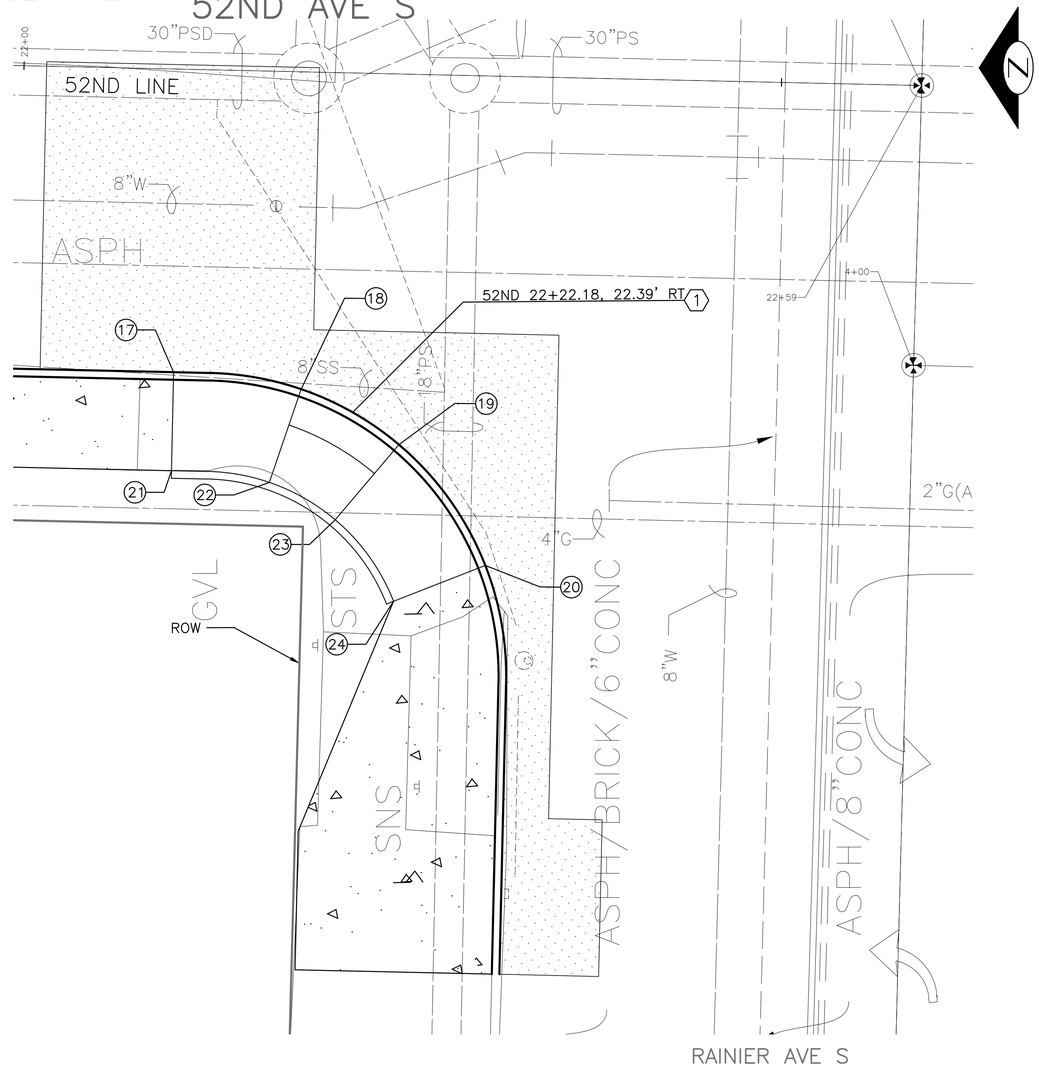

S HENDERSON ST & 53RD AVE S - SW CURB RAMP DATA					
POINT	STATION	OFFSET		ELEV	DESCRIPTION
1	##+##.##	##.##'	##	##.##'	TOC - RAMP WING
2	##+##.##	##.##'	##	##.##'	TOC - RAMP BOTTOM
3	##+##.##	##.##'	##	##.##'	TOC - RAMP BOTTOM
4	##+##.##	##.##'	##	##.##'	TOC - RAMP WING
5	##+##.##	##.##'	##	##.##'	BACK OF RAMP
6	##+##.##	##.##'	##	##.##'	BACK OF RAMP
7	##+##.##	##.##'	##	##.##'	RAMP LANDING
8	##+##.##	##.##'	##	##.##'	RAMP LANDING

S HENDERSON ST & 53RD AVE S - SE CURB RAMP DATA					
POINT	STATION	OFFSET		ELEV	DESCRIPTION
9	##+##.##	##.##'	##	##.##'	TOC - RAMP WING
10	##+##.##	##.##'	##	##.##'	TOC - RAMP BOTTOM
11	##+##.##	##.##'	##	##.##'	TOC - RAMP BOTTOM
12	##+##.##	##.##'	##	##.##'	TOC - RAMP WING
13	##+##.##	##.##'	##	##.##'	BACK OF RAMP
14	##+##.##	##.##'	##	##.##'	BACK OF RAMP
15	##+##.##	##.##'	##	##.##'	RAMP LANDING
16	##+##.##	##.##'	##	##.##'	RAMP LANDING

CONSTRUCTION NOTES

1. PARALLEL CURB RAMP, TYPE 422B, PER CITY OF SEATTLE STANDARD PLAN NO. 422B.
2. PERPENDICULAR CURB RAMP, TYPE 422A, PER CITY OF SEATTLE STANDARD PLAN NO. 422A.

GENERAL NOTES

1. CALLOUTS AND DIMENSIONS ARE TO FACE OF CURB UNLESS OTHERWISE NOTED.
2. CURB RAMP CALLOUTS ARE TO CENTER OF CURB RAMP AT FACE OF CURB.

52ND AVE S & RAINIER AVE S - NW CURB RAMP DATA					
POINT	STATION	OFFSET		ELEV	DESCRIPTION
17	##+##.##	##.##'	##	##.##'	TOC - RAMP WING
18	##+##.##	##.##'	##	##.##'	TOC - RAMP BOTTOM
19	##+##.##	##.##'	##	##.##'	TOC - RAMP BOTTOM
20	##+##.##	##.##'	##	##.##'	TOC - RAMP WING
21	##+##.##	##.##'	##	##.##'	TOC - RAMP WING
22	##+##.##	##.##'	##	##.##'	BOC - RAMP BOTTOM
23	##+##.##	##.##'	##	##.##'	BOC - RAMP BOTTOM
24	##+##.##	##.##'	##	##.##'	TOC - RAMP WING

5 2.5 0 5 10
SCALE IN FEET

60% COMPLETE SIP
(NOT FOR CONSTRUCTION)

PAVING DETAILS (2 OF 2)

NO.	MARK	DATE	NATURE REVISIONS	MADE	CHK'D	REV'D

VAULT SERIAL NO. 35668

P:\Project\C311054-Lower Mapes Creek Restoration\04-Design\A-Plot_Files\CH2MHill\25 C311054-P-ROAD-DETI - DET.dwg
jonesjs Sep-06-12 3:08pm

CH2MHILL

APPROVED FOR ADVERTISING
NANCY LOCKE
DEPARTMENT OF FINANCE & ADMINISTRATIVE SERVICES
SEATTLE, WASHINGTON 20
BY:
PURCHASING & CONTRACTING SERVICES DIRECTOR

NAME OR INITIALS AND DATE	INITIALS AND DATE
DESIGNED	REVIEWED:
CHECKED	DES. CONST.
	SDOT PROJ. MGR.
DRAWN	RECEIVED
CHECKED	REVISED AS BUILT

ALL WORK SHALL BE DONE IN ACCORDANCE WITH THE CITY OF SEATTLE STANDARD PLANS AND SPECIFICATIONS AND OTHER DOCUMENTS CALLED FOR IN SECTION 0-02.3 OF THE PROJECT MANUAL.

STEPHANIE SARA COMAN
STATE OF WASHINGTON
REGISTERED
PROFESSIONAL ENGINEER

Seattle Public Utilities
City of Seattle
Ray Hoffman, Director
ORDINANCE NO. APPROVED
FUND:
SCALE: H. 1"=20', V. 1"=10' INSPECTOR'S BOOK

52ND AVE S CSO REDUCTION & LOWER MAPES CREEK RESTORATION

JOB NO. PC C311054 R/W CO
VAULT PLAN NO. 774-889
SHEET 25 OF 53

CREEK ALIGNMENT TABLE

NUMBER	DESC	BEGIN STATION	END STATION	NORTHING	EASTING	TANGENT OR CURVE DATA
L1	TANGENT	0+00.00 TO	0+01.09	194221.41 194222.50	1286898.17 1286898.15	N 0° 59' 28" W
C1	PC PT PI	0+01.09 – –	1+22.30	194222.50 194287.61 194308.85	1286898.15 1286980.37 1286896.65	R= 66.00' DELTA = 105.2293 L= 121.22'
L2	TANGENT	1+22.30 TO	1+22.30	194287.61 194287.61	1286980.37 1286980.37	S 75° 45' 43" E
C2	PC PT PI	1+22.30 – –	1+93.22	194287.61 194288.61 194278.68	1286980.37 1287050.47 1287015.55	R= 135.00' DELTA = 30.1004 L= 70.92'
C3	PC PT PI	1+93.22 – –	2+22.32	194288.61 194291.00 194292.63	1287050.47 1287079.29 1287064.64	R= 75.00' DELTA = 22.2274 L= 29.10'
L3	TANGENT	2+22.32 TO	2+54.68	194291.00 194287.41	1287079.29 1287111.45	S 83° 38' 06" E

CREEK ALIGNMENT TABLE

NUMBER	DESC	BEGIN STATION	END STATION	NORTHING	EASTING	TANGENT OR CURVE DATA
C4	PC PT PI	2+54.68 – –	3+37.92	194287.41 194295.41 194282.73	1287111.45 1287193.70 1287153.42	R= 200.00' DELTA = 23.8452 L= 83.24'
L4	TANGENT	3+37.92 TO	3+73.01	194295.41 194305.96	1287193.70 1287227.17	N 72° 31' 11" E
C5	PC PT PI	3+73.01 – –	4+31.02	194305.96 194299.81 194315.20	1287227.17 1287283.20 1287256.53	R= 70.00' DELTA = 47.4826 L= 58.01'
L5	TANGENT	4+31.02 TO	4+65.00	194299.81 194282.82	1287283.20 1287312.62	S 59° 59' 52" E

LEGEND

- SUMMER LAKE ELEVATION
- HIGH CREEK WATER LEVEL
- LIMITS OF WORK
- TREE PROTECTION FENCE PER PARKS STANDARD PLANS
- SPECIAL GRADING ACTIVITY AROUND EXISTING TREES

PEDESTRIAN BRIDGE

LENGTH	CENTER OF BRIDGE	BRIDGE CENTERLINE BEARING
24.0'	STA 2+26.6, OFFSET 1.2'R	N16d05'00"W

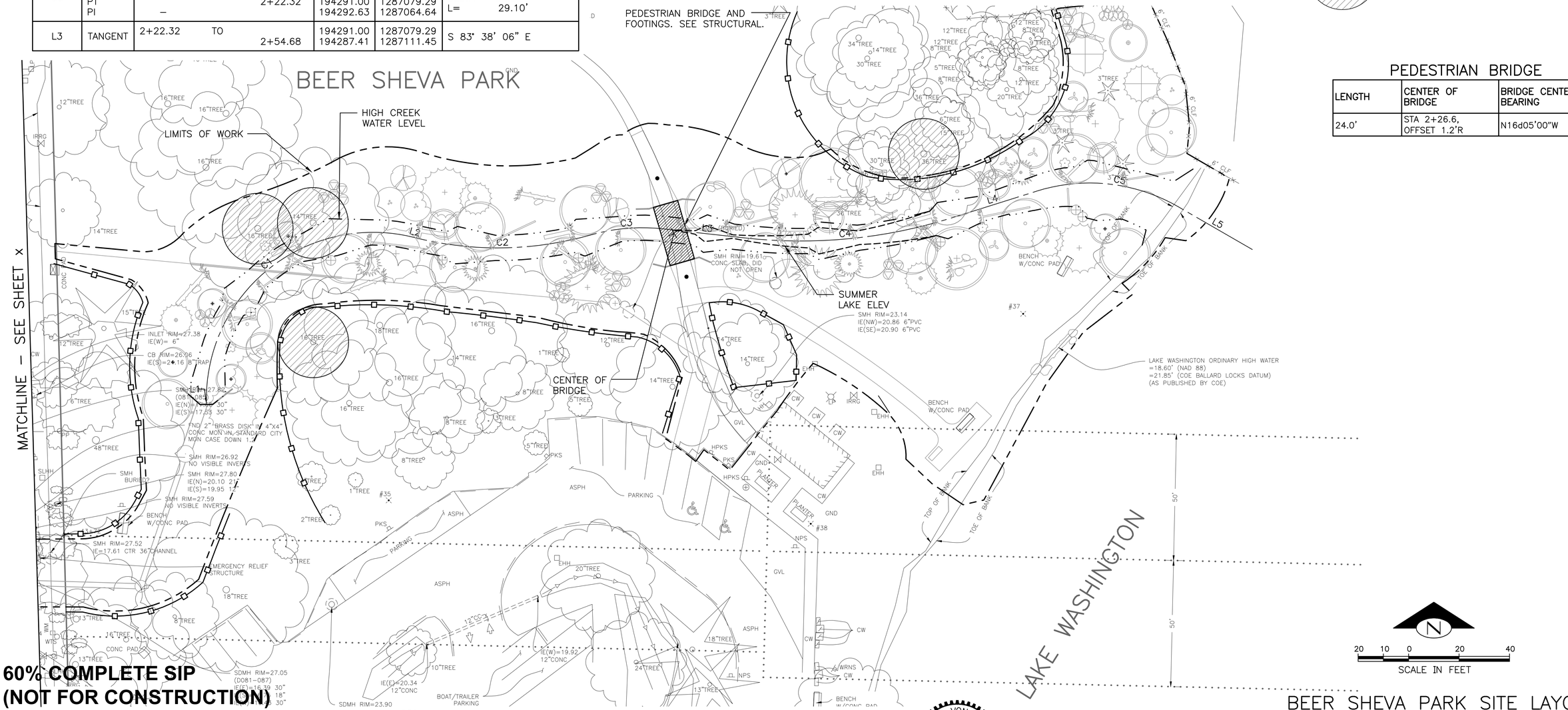

60% COMPLETE SIP
(NOT FOR CONSTRUCTION)

VAULT SERIAL NO.	DATE	MARK	NATURE REVISIONS	MADE	CHK'D	REV'D
35668						

P:\Project\C311054-Lower Mapes Creek Restoration\04-Design\A-Plot_Files\SvR\26 C301319-P-Site-Layout.dwg
jonesjc Sep-06-12 3:09pm

SvR DESIGN COMPANY
1205 SECOND AVE. SUITE 200
SEATTLE, WA 98101
T 206.223.0326
F 206.223.0125
www.svrdesign.com

AMALIA M LEIGHTON — STATE OF WASHINGTON — 43050 — REGISTERED PROFESSIONAL ENGINEER

APPROVED FOR ADVERTISING
NANCY LOCKE
DEPARTMENT OF FINANCE & ADMINISTRATIVE SERVICES
SEATTLE, WASHINGTON 20
BY: PURCHASING & CONTRACTING SERVICES DIRECTOR

NAME OR INITIALS AND DATE	INITIALS AND DATE
DESIGNED CHECKED	REVIEWED: DES. CONST. SDOT PROJ. MGR.
DRAWN CHECKED	RECEIVED
	REVISED AS BUILT

ALL WORK SHALL BE DONE IN ACCORDANCE WITH THE CITY OF SEATTLE STANDARD PLANS AND SPECIFICATIONS AND OTHER DOCUMENTS CALLED FOR IN SECTION 0-02.3 OF THE PROJECT MANUAL.

THOMAS R. VON SCHRADER — STATE OF WASHINGTON — 25844 — REGISTERED PROFESSIONAL ENGINEER
QA/QC REVIEWER

Seattle Public Utilities
City of Seattle
Ray Hoffman, Director
ORDINANCE NO. APPROVED
FUND:
SCALE: H. 1"=20', V. 1"=10' INSPECTOR'S BOOK

52ND AVE S CSO REDUCTION & LOWER MAPES CREEK RESTORATION

BEER SHEVA PARK SITE LAYOUT

JOB NO.	
PC	C311054
R/W	
CO	
VAULT PLAN NO.	774–889
SHEET	26 OF 53

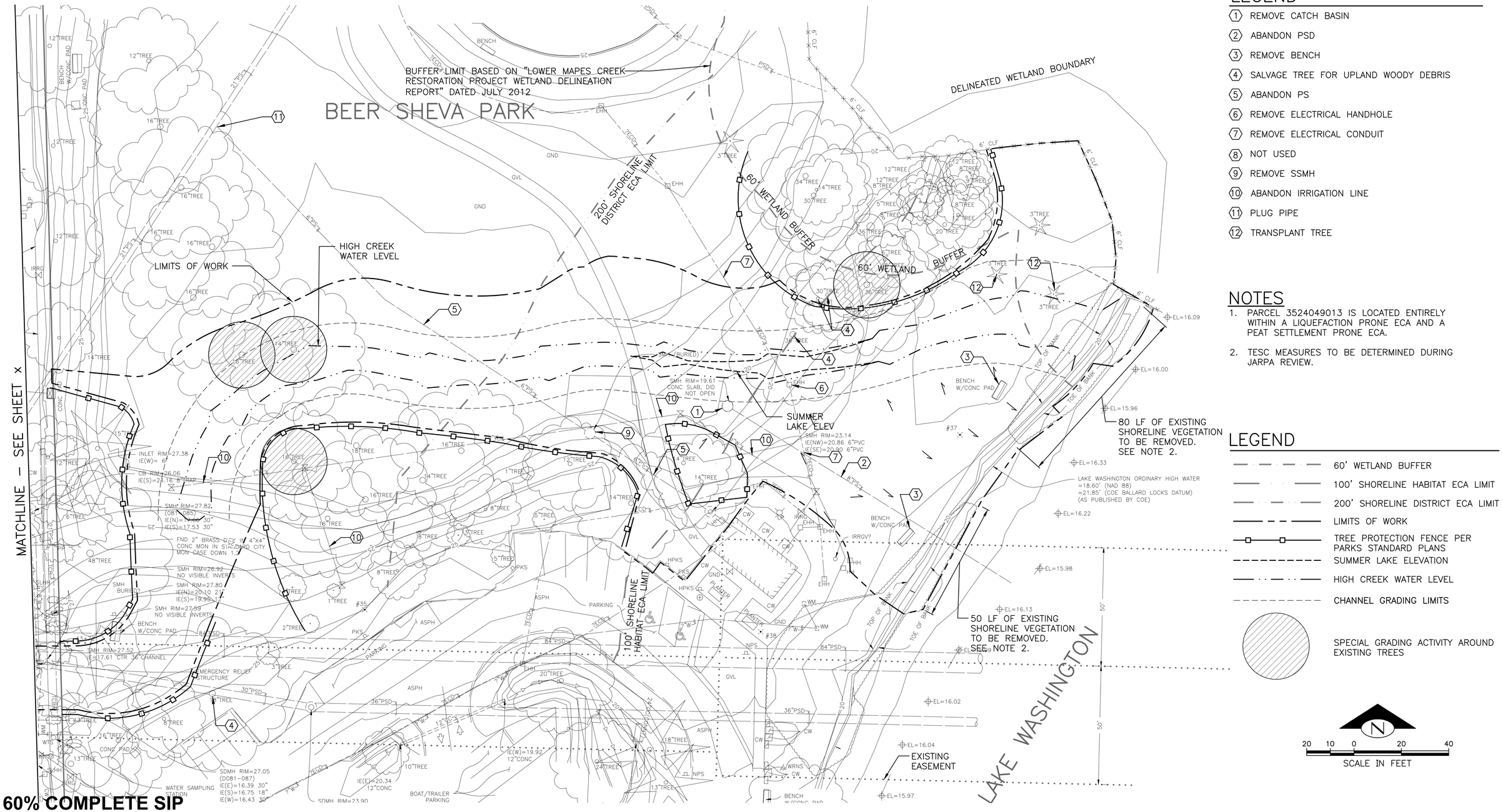

LEGEND

1. REMOVE CATCH BASIN
2. ABANDON PSD
3. REMOVE BENCH
4. SALVAGE TREE FOR UPLAND WOODY DEBRIS
5. ABANDON PS
6. REMOVE ELECTRICAL HANDHOLE
7. REMOVE ELECTRICAL CONDUIT
8. NOT USED
9. REMOVE SSMH
10. ABANDON IRRIGATION LINE
11. PLUG PIPE
12. TRANSPLANT TREE

NOTES

1. PARCEL 3524049013 IS LOCATED ENTIRELY WITHIN A LIQUEFACTION PRONE ECA AND A PEAT SETTLEMENT PRONE ECA.
2. TESC MEASURES TO BE DETERMINED DURING JARPA REVIEW.

LEGEND

- 60' WETLAND BUFFER
- 100' SHORELINE HABITAT ECA LIMIT
- 200' SHORELINE DISTRICT ECA LIMIT
- LIMITS OF WORK
- TREE PROTECTION FENCE PER PARKS STANDARD PLANS
- SUMMER LAKE ELEVATION
- HIGH CREEK WATER LEVEL
- CHANNEL GRADING LIMITS
- SPECIAL GRADING ACTIVITY AROUND EXISTING TREES

NO.	REVISIONS	MADE	CHK'D	REV'D

VAULT SERIAL NO. 35668

P:\Project\C311054-Lower Mapes Creek Restoration\04-Design\A-Plot_Files\SvR\27 C301319-P-EROS-DEMO.dwg
jonesjc Sep-06-12 3:09pm

60% COMPLETE SIP
(NOT FOR CONSTRUCTION)

CREEK TESC, DEMOLITION, REMOVAL & PROTECTION

SvR DESIGN COMPANY
1205 SECOND AVE, SUITE 200
SEATTLE, WA 98101
T 206.223.0326
F 206.223.0125
www.svrdesign.com

AMALIA M LEIGHTON — STATE OF WASHINGTON — 43005 — REGISTERED PROFESSIONAL ENGINEER

APPROVED FOR ADVERTISING
NANCY LOCKE
DEPARTMENT OF FINANCE & ADMINISTRATIVE SERVICES
SEATTLE, WASHINGTON 20

BY:
PURCHASING & CONTRACTING SERVICES DIRECTOR

NAME OR INITIALS AND DATE	INITIALS AND DATE
DESIGNED	REVIEWED:
CHECKED	DES. CONST.
	SDOT PROJ. MGR.
DRAWN	RECEIVED
CHECKED	REVISED AS BUILT

ALL WORK SHALL BE DONE IN ACCORDANCE WITH THE CITY OF SEATTLE STANDARD PLANS AND SPECIFICATIONS AND OTHER DOCUMENTS CALLED FOR IN SECTION 0-02.3 OF THE PROJECT MANUAL.

THOMAS R. VON SCHRADER — STATE OF WASHINGTON — 22814 — REGISTERED PROFESSIONAL ENGINEER
QA/QC REVIEWER

Seattle Public Utilities
City of Seattle
Ray Hoffman, Director

ORDINANCE NO. APPROVED
FUND:
SCALE: H. 1"=20', V. 1"=10' INSPECTOR'S BOOK

52ND AVE S CSO REDUCTION & LOWER MAPES CREEK RESTORATION

JOB NO. PC C311054 R/W CO
VAULT PLAN NO. 774-889
SHEET 27 OF 53

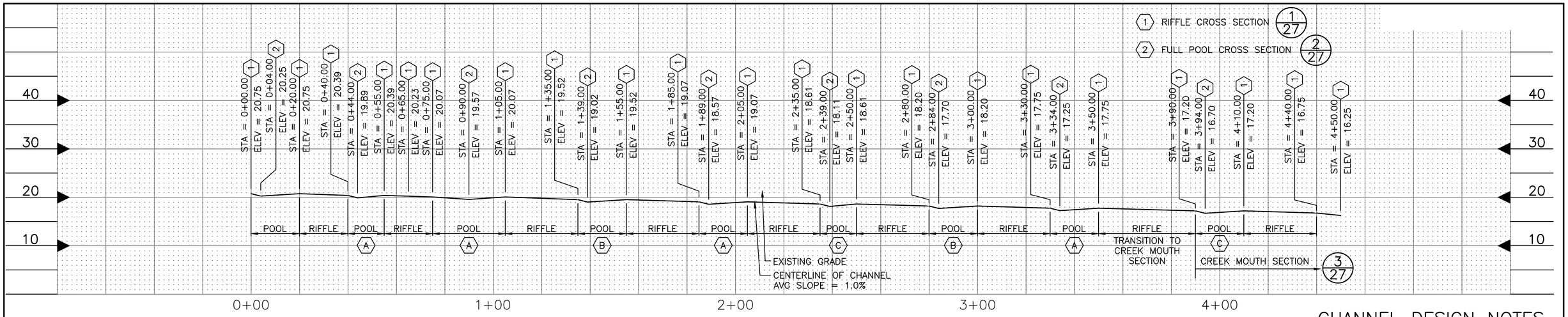

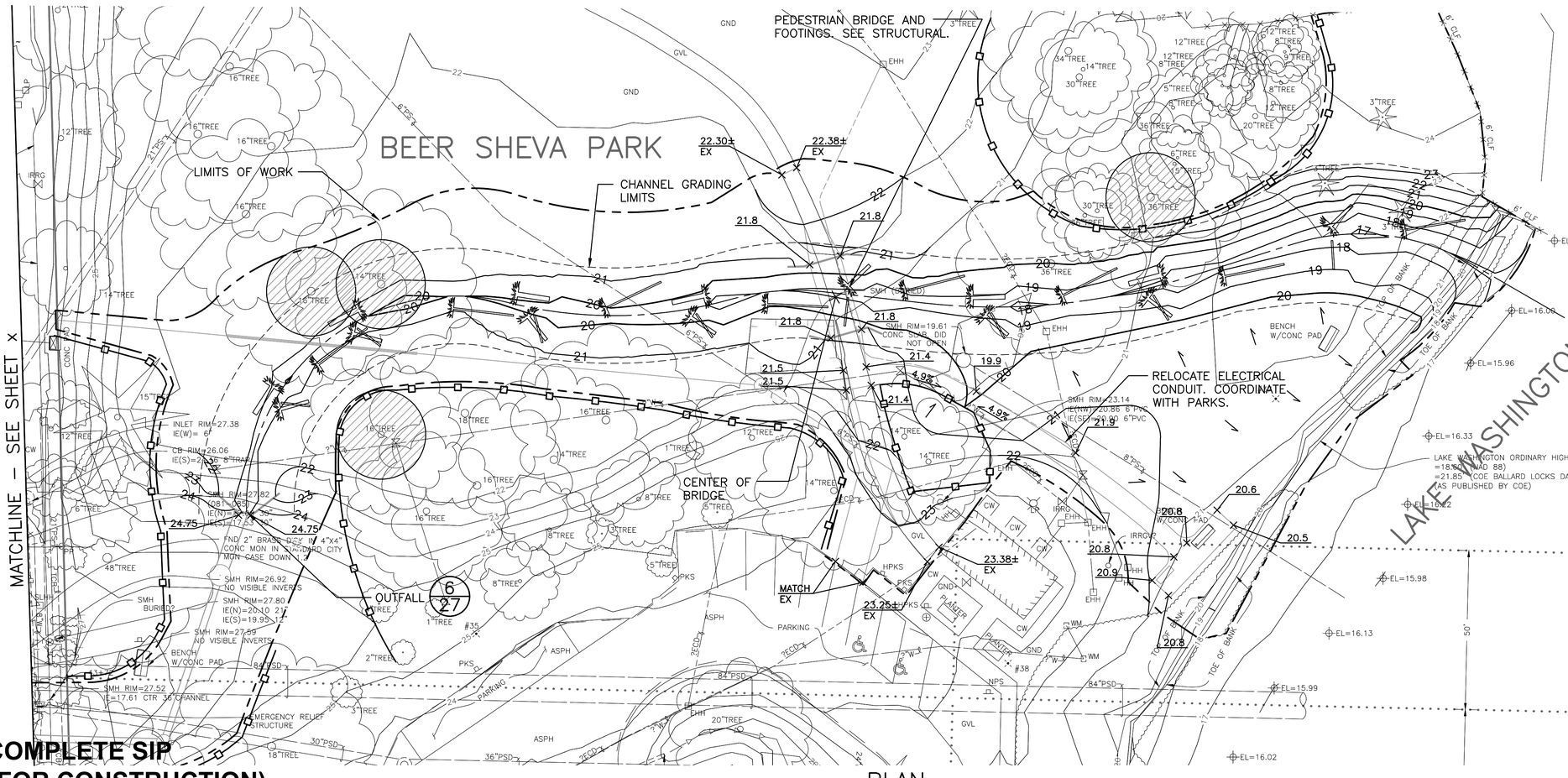

CHANNEL DESIGN NOTES

1. FOUR ADDITIONAL LWD TYPE 4 PIECES TO BE PLACED BELOW HIGH WATER LEVEL AS DETERMINED BY FIELD ENGINEER.

(A) POOL TYPE A 4/28

(B) POOL TYPE B 5/28

(C) POOL TYPE C 6/28

LEGEND

- SPECIAL GRADING ACTIVITY AROUND EXISTING TREES
- TREE PROTECTION FENCE PER PARKS STANDARD PLANS
- LWD FOR CHANNEL POOLS 4/28 5/28 6/28
- LIMITS OF WORK

N

20 10 0 20 40

SCALE IN FEET

60% COMPLETE SIP
(NOT FOR CONSTRUCTION)

PLAN

CREEK GRADING PLAN

VAULT	SERIAL NO.	DATE	MARK	NATURE REVISIONS	MADE	CHK'D	REV'D
35668							

P:\Project\C311054-Lower Mapes Creek Restoration\04-Design\A-Plot_Files\SvR\28 C301319-P-Site-Grading.dwg
jonesjs Sep-06-12 3:10pm

SvR DESIGN COMPANY
1205 SECOND AVE. SUITE 200
SEATTLE, WA 98101
T 206.223.0326
F 206.223.0125
www.svrdesign.com

AMALIA M LEIGHTON STATE OF WASHINGTON 43906 REGISTERED PROFESSIONAL ENGINEER

APPROVED FOR ADVERTISING
NANCY LOCKE
DEPARTMENT OF FINANCE & ADMINISTRATIVE SERVICES
SEATTLE, WASHINGTON 20
BY:
PURCHASING & CONTRACTING SERVICES DIRECTOR

NAME OR INITIALS AND DATE	INITIALS AND DATE
DESIGNED	REVIEWED: DES. CONST. SDOT PROJ. MGR.
CHECKED	
DRAWN	RECEIVED
CHECKED	REVISED AS BUILT

ALL WORK SHALL BE DONE IN ACCORDANCE WITH THE CITY OF SEATTLE STANDARD PLANS AND SPECIFICATIONS AND OTHER DOCUMENTS CALLED FOR IN SECTION 0-02.3 OF THE PROJECT MANUAL.

THOMAS R. VON SCHRADER STATE OF WASHINGTON 25844 REGISTERED PROFESSIONAL ENGINEER
QA/QC REVIEWER

Seattle Public Utilities
City of Seattle
Ray Hoffman, Director
ORDINANCE NO. APPROVED
FUND:
SCALE: H. 1"=20', V. 1"=10' INSPECTOR'S BOOK

52ND AVE S CSO REDUCTION & LOWER MAPES CREEK RESTORATION

JOB NO. PC C311054 R/W CO
VAULT PLAN NO. 774-889
SHEET 28 OF 53

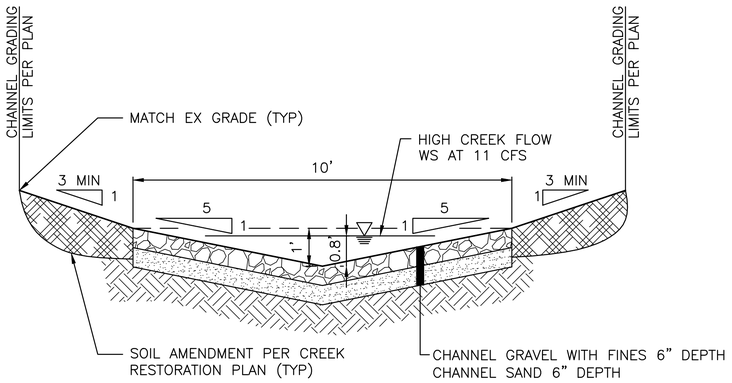

RIFFLE SECTION 1/27
NTS

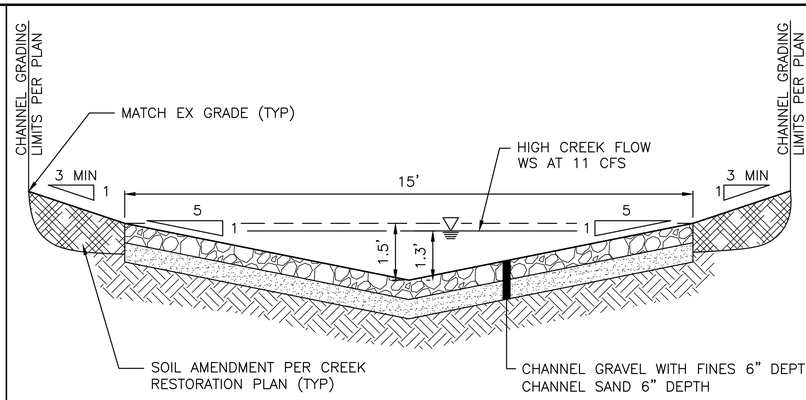

FULL POOL SECTION 2/27
NTS

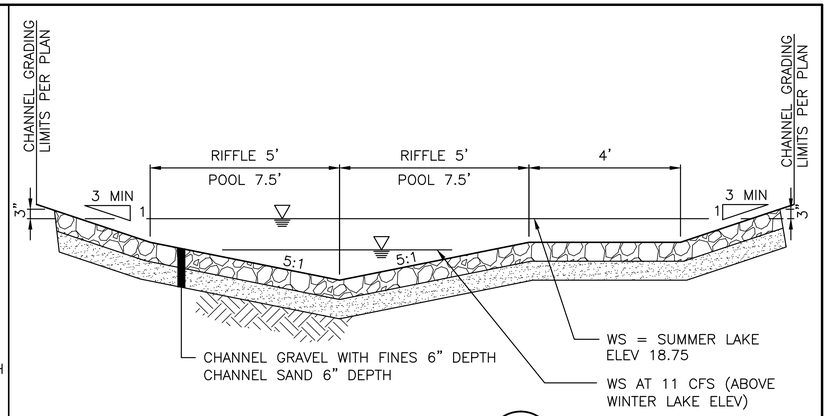

CREEK MOUTH 3/27
NTS
STA 3+90 TO 4+35

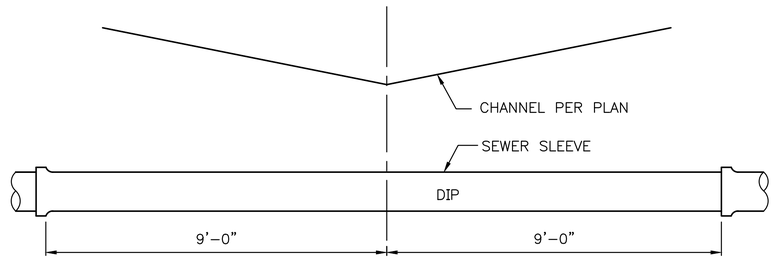

STANDARD SINGLE 18'-0" NOMINAL LENGTH DUCTILE IRON PIPE SECTION CENTERED AT THE POINT OF CROSSING

SEWER CROSSING UNDER CHANNEL 5/27
NTS

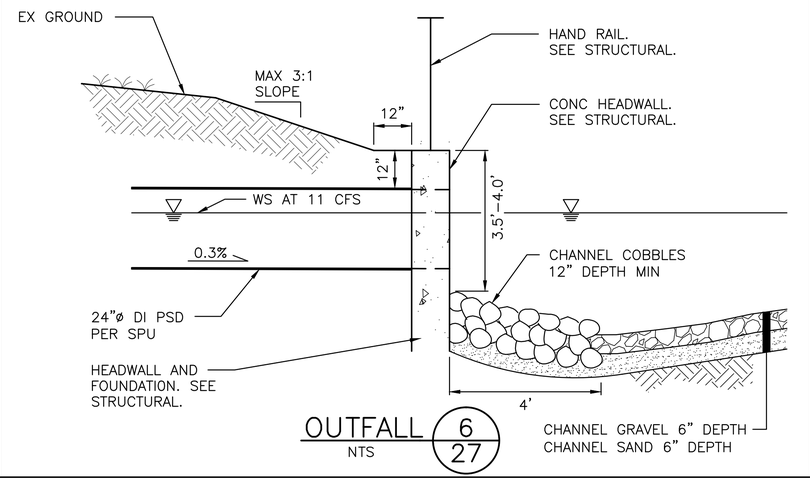

OUTFALL 6/27
NTS

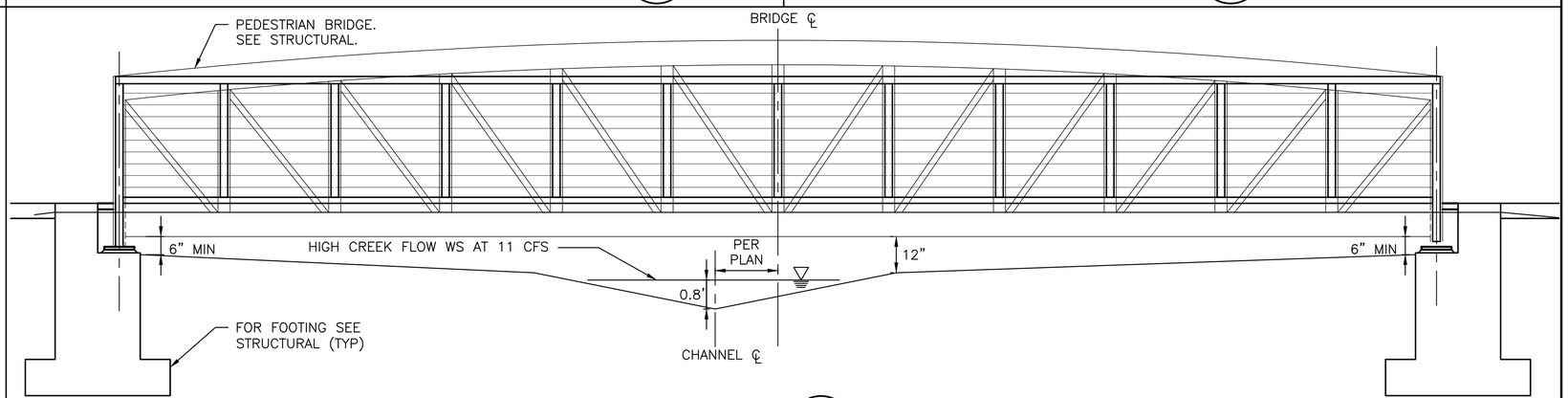

BRIDGE 9/27
NTS

60% COMPLETE SIP
(NOT FOR CONSTRUCTION)

CREEK DETAILS (1 OF 2)

VAULT SERIAL NO.	DATE	MARK	REVISIONS NATURE	MADE	CHK'D	REV'D
35668						

SvR DESIGN COMPANY
1205 SECOND AVE, SUITE 200
SEATTLE, WA 98101
T 206.223.0326
F 206.223.0125
www.svrdesign.com

AMALIA M LEIGHTON — STATE OF WASHINGTON — 23286 — REGISTERED PROFESSIONAL ENGINEER

APPROVED FOR ADVERTISING
NANCY LOCKE
DEPARTMENT OF FINANCE & ADMINISTRATIVE SERVICES
SEATTLE, WASHINGTON 20

BY:
PURCHASING & CONTRACTING SERVICES DIRECTOR

NAME OR INITIALS AND DATE	INITIALS AND DATE
DESIGNED	REVIEWED:
CHECKED	DES. CONST.
DRAWN	SDOT PROJ. MGR.
CHECKED	RECEIVED
	REVISED AS BUILT

ALL WORK SHALL BE DONE IN ACCORDANCE WITH THE CITY OF SEATTLE STANDARD PLANS AND SPECIFICATIONS AND OTHER DOCUMENTS CALLED FOR IN SECTION 0-02.3 OF THE PROJECT MANUAL.

THOMAS R. VON SCHRADER — STATE OF WASHINGTON — 22814 — REGISTERED PROFESSIONAL ENGINEER
QA/QC REVIEWER

Seattle Public Utilities
City of Seattle
Ray Hoffman, Director

ORDINANCE NO. APPROVED
FUND:
SCALE: H. 1"=20', V. 1"=10' INSPECTOR'S BOOK

52ND AVE S CSO REDUCTION & LOWER MAPES CREEK RESTORATION

JOB NO. PC C311054 R/W CO
VAULT PLAN NO. 774-889
SHEET 29 OF 53

P:\Project\C311054-Lower Mapes Creek Restoration\04-Design\A-Plot_Files\SvR\29 C301319-P-DETL1.dwg
jonesjc Sep-06-12 3:10pm

REGION NO.	STATE	FEDERAL AID PROJECT NO.	SHEET NO.
10	WA		30

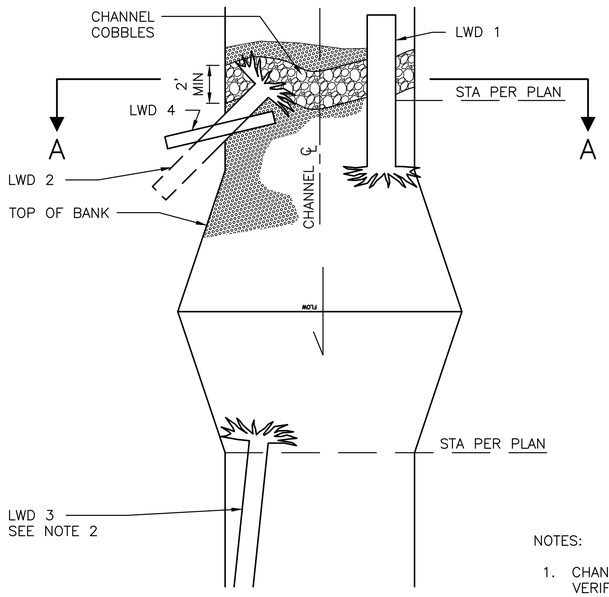

NOTES:

1. CHANNEL WIDTH TO BE VERIFIED BASED ON HYDROLOGY PRIOR TO 90% REVIEW.
2. LWD PIECES PLACEMENT TO BE DETERMINED IN THE FIELD.

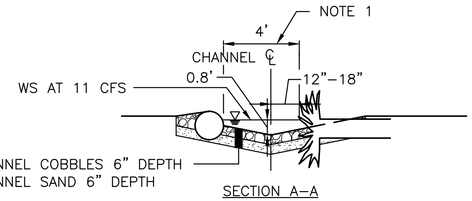

POOL TYPE A 4/28
NTS

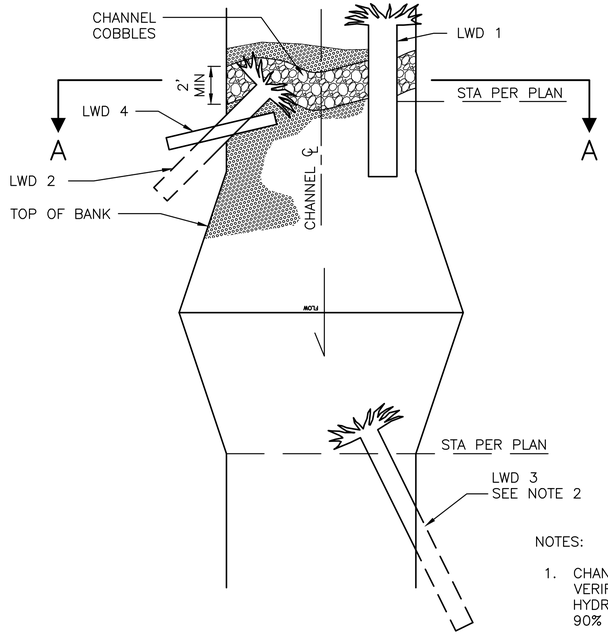

NOTES:

1. CHANNEL WIDTH TO BE VERIFIED BASED ON HYDROLOGY PRIOR TO 90% REVIEW.
2. LWD PIECES PLACEMENT TO BE DETERMINED IN THE FIELD.

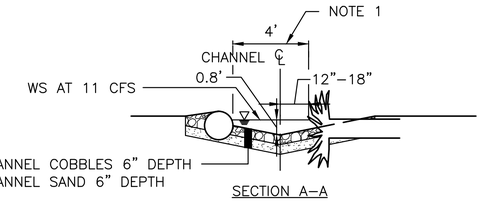

POOL TYPE B 5/28
NTS

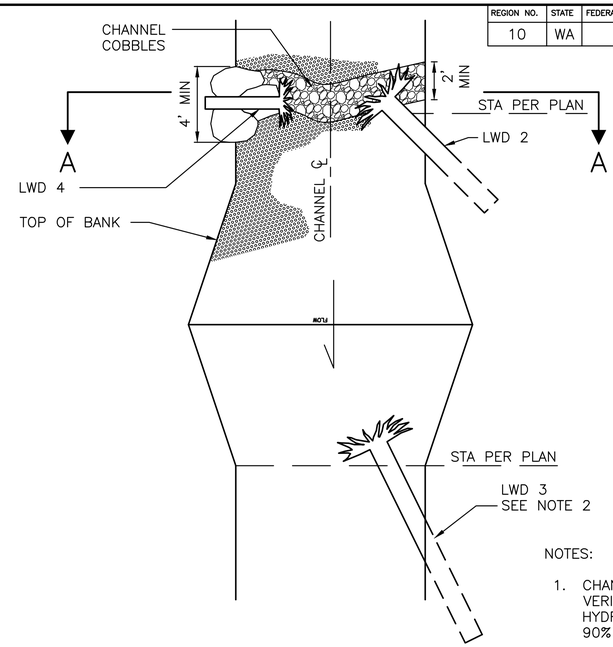

NOTES:

1. CHANNEL WIDTH TO BE VERIFIED BASED ON HYDROLOGY PRIOR TO 90% REVIEW.
2. LWD PIECES PLACEMENT TO BE DETERMINED IN THE FIELD.

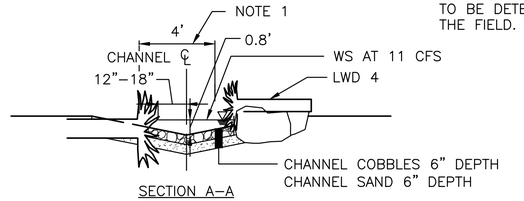

POOL TYPE C 6/28
NTS

TYPE OF MATERIAL	SIZE RANGE	PURPOSE
LWD 1	MINIMUM 18" DIAMETER, MINIMUM LENGTH OF 10 FEET, 3–4 FOOT INTACT ROOTWAD	KEY PIECE. KEEP POOLS AND RIFFLES SELF–MAINTAINING AND PROVIDE HABITAT FOR JUVENILE SALMON.
LWD 2	MINIMUM 12" DIAMETER, MINIMUM LENGTH OF BETWEEN 8 AND 10 FEET, 3–4 FOOT INTACT ROOTWAD TO BE BURIED HALF OF ITS LENGTH	KEEP POOLS AND RIFFLES SELF–MAINTAINING AND PROVIDE HABITAT FOR JUVENILE SALMON.
LWD 3	MINIMUM 6" DIAMETER, MINIMUM LENGTH OF BETWEEN 18 AND 20 FEET, 2–4 FOOT INTACT ROOTWAD	PROVIDE SHADE FOR JUVENILE SALMON AND ADD COMPLEXITY TO THE CREEK.
LWD 4	MINIMUM 6" DIAMETER, MINIMUM LENGTH OF BETWEEN 8 TO 10 FEET, WITH OR WITHOUT ROOTWAD	PROVIDE SHADE FOR JUVENILE SALMON AND ADD COMPLEXITY TO THE CREEK.
CHANNEL BOULDERS	2 MAN ROCKS	PROVIDE HABITAT FOR JUVENILE SALMON.
CHANNEL COBBLE	D50 OF 6"	PROVIDE ROUGHNESS AT THE START OF POOL.
CHANNEL GRAVEL WITH FINES	D50 OF 1"	PROVIDE BED MATERIAL AND HABITAT FOR JUVENILE SALMON
CHANNEL SAND	D50 OF 0.1"	PROVIDE UNDERLYING BED MATERIAL.

60% COMPLETE SIP
(NOT FOR CONSTRUCTION)

CREEK DETAILS (2 OF 2)

NATURE REVISIONS	MADE	CHK'D	REV'D

VAULT SERIAL NO.	DATE	MARK
35668		

SvR DESIGN COMPANY
1205 SECOND AVE. SUITE 200
SEATTLE, WA 98101
T 206.223.0326
F 206.223.0125
www.svrdesign.com

AMALIA M LEIGHTON — STATE OF WASHINGTON — 43058 — REGISTERED PROFESSIONAL ENGINEER

APPROVED FOR ADVERTISING
NANCY LOCKE
DEPARTMENT OF FINANCE & ADMINISTRATIVE SERVICES
SEATTLE, WASHINGTON 20
BY:
PURCHASING & CONTRACTING SERVICES DIRECTOR

NAME OR INITIALS AND DATE	INITIALS AND DATE
DESIGNED CHECKED	REVIEWED: DES. CONST. SDOT PROJ. MGR.
DRAWN CHECKED	RECEIVED REVISED AS BUILT

ALL WORK SHALL BE DONE IN ACCORDANCE WITH THE CITY OF SEATTLE STANDARD PLANS AND SPECIFICATIONS AND OTHER DOCUMENTS CALLED FOR IN SECTION 0-02.3 OF THE PROJECT MANUAL.

THOMAS R. VON SCHRADER — STATE OF WASHINGTON — 25574 — REGISTERED PROFESSIONAL ENGINEER
QA/QC REVIEWER

Seattle Public Utilities
ORDINANCE NO.
FUND:
SCALE: H. 1"=20', V. 1"=10'

City of Seattle
Ray Hoffman, Director
APPROVED
INSPECTOR'S BOOK

52ND AVE S CSO REDUCTION & LOWER MAPES CREEK RESTORATION

JOB NO	
PC	C311054
R/W	
CO	
VAULT PLAN NO.	774–889
SHEET	30 OF 53

P:\Project\C311054-Lower Mapes Creek Restoration\04-Design\A-Plot_Files\SvR\30 C301319-P-DETL2.dwg
jonesjc Sep-06-12 3:10pm

BEER SHEVA PARK

PEDESTRIAN BRIDGE AND FOOTINGS. SEE STRUCTURAL.

RELOCATE ELECTRICAL CONDUIT. COORDINATE WITH PARKS.

ELECTRICAL CONDUIT ATTACHED TO BOTTOM OF BRIDGE. SEE STRUCTURAL.

LIMITS OF WORK

CORE DRILL CONNECTION AT SPRING LINE OF EXISTING PS IE 18.3±

60 LF 8" DI SLEEVE RJ (5/27)

224 LF 6" BUTT FUSED HDPE

SSMH 204
RIM 21.79
IE(SE) 20.13
IE(W) 20.13 CENTER OF BRIDGE

67 LF 6" BUTT FUSED HDPE

CONNECT TO EX SSMH IE 20.86±. RECHANNEL

OUTFALL (6/27)

RELOCATE ELECTRICAL CONDUIT. COORDINATE WITH PARKS.

RELOCATE ELECTRICAL CONDUIT. COORDINATE WITH PARKS.

EXISTING EASEMENT

LAKE WASHINGTON

LAKE WASHINGTON ORDINARY HIGH WATER
=18.60' (NAD 88)
=21.85' (COE BALLARD LOCKS DATUM)
(AS PUBLISHED BY COE)

MATCHLINE – SEE SHEET x

NOTES

1. PIPE BEDDING FOR HDPE SHALL BE CLASS B.

LEGEND

- SPECIAL GRADING ACTIVITY AROUND EXISTING TREES
- TREE PROTECTION FENCE PER PARKS STANDARD PLANS
- LIMITS OF WORK

N

20 10 0 20 40
SCALE IN FEET

60% COMPLETE SIP
(NOT FOR CONSTRUCTION)

CREEK UTILITY PLAN

VAULT	SERIAL NO.	DATE	MARK	NATURE REVISIONS	MADE	CHK'D	REV'D
	35668						

P:\Project\C311054-Lower Mapes Creek Restoration\04-Design\A-Plot_Files\SvR\31 C301319-P-SSWR-POWR-STRM-WATR.dwg
jonesjc Sep-06-12 3:11pm

SvR DESIGN COMPANY
1205 SECOND AVE. SUITE 200
SEATTLE, WA 98101
T 206.223.0326
F 206.223.0125
www.svrdesign.com

AMALIA M LEIGHTON — STATE OF WASHINGTON — 43050 — REGISTERED PROFESSIONAL ENGINEER

APPROVED FOR ADVERTISING
NANCY LOCKE
DEPARTMENT OF FINANCE & ADMINISTRATIVE SERVICES
SEATTLE, WASHINGTON 20

BY:
PURCHASING & CONTRACTING SERVICES DIRECTOR

NAME OR INITIALS AND DATE	INITIALS AND DATE
DESIGNED	REVIEWED:
CHECKED	DES. CONST.
	SDOT PROJ. MGR.
DRAWN	RECEIVED
CHECKED	REVISED AS BUILT

ALL WORK SHALL BE DONE IN ACCORDANCE WITH THE CITY OF SEATTLE STANDARD PLANS AND SPECIFICATIONS AND OTHER DOCUMENTS CALLED FOR IN SECTION 0-02.3 OF THE PROJECT MANUAL.

THOMAS R. VON SCHRADER — STATE OF WASHINGTON — 23944 — REGISTERED PROFESSIONAL ENGINEER
QA/QC REVIEWER

Seattle Public Utilities
City of Seattle
Ray Hoffman, Director

ORDINANCE NO. APPROVED
FUND:
SCALE: H. 1"=20', V. 1"=10' INSPECTOR'S BOOK

52ND AVE S CSO REDUCTION & LOWER MAPES CREEK RESTORATION

JOB NO. PC C311054 R/W CO
VAULT PLAN NO. 774–889
SHEET 31 OF 53

PLANT SCHEDULE DT=DROUGHT TOLERANT, NWN=NORTHWEST NATIVE, EG = EVERGREEN, <3'HT = TYPICAL HEIGHT LESS THAN 3'

THE "ZONE" DESCRIBES WHERE PLANTS ARE TO BE LOCATED. ZONE 1 IS THE DESIGNATION FOR AQUATIC PLANTS TO BE USED ALONG THE STREAM EDGE. ZONE 2 IS THE DESIGNATION FOR PLANTS TO BE LOCATED ON THE RIPARIAN SLOPES. ZONE 3 IS FOR SPECIES TO BE LOCATED IN THE UPLAND AREAS.

DECIDUOUS TREES

SYM	DT*	NWN*	EG*	<3' HT.	BOTANICAL NAME	COMMON NAME	SIZE/SPACING	ZONE*	QTY.	NOTES	PLANTING DETAIL #
	DT	NWN			ACER CIRCINATUM	VINE MAPLE	4'–5' HT./ AS SHOWN	2,3	5	MULTI–STEM/CLUMPING; MIN. 3 STEMS FROM ROOTBALL; STAKING NOT REQUIRED.	SPR STD. DETAIL. NO. 32 93 33 & 32 93 49
		NWN			AMELANCHIER ALNIFOLIA	SERVICEBERRY	4'–5' HT./ AS SHOWN	2,3	6	MULTI–STEM/CLUMPING; MIN. 3 STEMS FROM ROOTBALL; STAKING NOT REQUIRED.	"
	DT	NWN			CORYLUS CORNUTA	WESTERN HAZELNUT	4'–5' HT./ AS SHOWN	3	4	MULTI–STEM/CLUMPING; MIN. 3 STEMS FROM ROOTBALL; STAKING NOT REQUIRED.	"
		NWN			SALIX HOOKERIANA	HOOKER'S WILLOW	4'–5' HT./ AS SHOWN	1,2	4		"
	DT	NWN			ACER MACROPHYLLA	BIGLEAF MAPLE	5 GAL. & 3'–4' HT./ AS SHOWN	2,3	1	SINGLE STEM; WELL–BRANCHED; STAKING NOT REQUIRED.	SPR STD. DETAIL. NO. 32 93 43 & 32 93 49
	DT	NWN			ACER MACROPHYLLA	BIGLEAF MAPLE	2" CAL./ AS SHOWN	2,3	2	B&B; WELL–BRANCHED; SINGLE STEM; BRANCHING AT 4' FROM GROUND	"
		NWN			FRAXINUS LATIFOLIA	OREGON ASH	5 GAL. & 3'–4' HT./ AS SHOWN	2,3	5	SINGLE STEM; WELL–BRANCHED; STAKING NOT REQUIRED.	"
		NWN			FRAXINUS LATIFOLIA	OREGON ASH	2" CAL./ AS SHOWN	2,3	16	B&B; WELL–BRANCHED; SINGLE STEM; BRANCHING AT 4' FROM GROUND	"
	SEMI	NWN			RHAMNUS PURSHIANA	CASCARA	5 GAL. & 3'–4' HT./ AS SHOWN	2,3	1	SINGLE STEM; WELL–BRANCHED; STAKING NOT REQUIRED.	"
	SEMI	NWN			RHAMNUS PURSHIANA	CASCARA	2" CAL./ AS SHOWN	2,3	2	B&B; WELL–BRANCHED; SINGLE STEM; BRANCHING AT 4' FROM GROUND	"

CONIFEROUS TREES

		NWN	EG		PSEUDOTSUGA MENZIESII	DOUGLAS FIR	5 GAL. & 3'–4' HT./ AS SHOWN	3	4	NATURAL FORM; STAKING NOT REQUIRED.	SPR STD. DETAIL. NO. 32 93 46 & 32 93 49
		NWN	EG		PSEUDOTSUGA MENZIESII	DOUGLAS FIR	8'–12' HT./ AS SHOWN	3	5	B&B; NATURAL FORM; LIMB–UP 30"–36" FROM GROUND	"
		NWN	EG		THUJA PLICATA	WESTERN RED CEDAR	8'–12' HT./ AS SHOWN	2,3	2	B&B; NATURAL FORM; LIMB–UP 30"–36" FROM GROUND	"
		NWN	EG		TSUGA HETEROPHYLLA	WESTERN HEMLOCK	5 GAL. & 3'–4' HT./ AS SHOWN	2,3	4	NATURAL FORM; STAKING NOT REQUIRED.	"
		NWN	EG		TSUGA HETEROPHYLLA	WESTERN HEMLOCK	8'–12' HT./ AS SHOWN	2,3	3	B&B; NATURAL FORM; LIMB–UP 30"–36" FROM GROUND	"

LARGE SHRUBS

	DT	NWN			LONICERA INVOLUCRATA	BLACK TWINBERRY	3 GAL./ 4'± O.C.	1,2	6		SPR STD. DETAIL. NO. 32 93 33 & 32 93 49
		NWN			RUBUS SPECTABILIS	SALMONBERRY	3 GAL./ 4'± O.C.	1,2	7		
		NWN			SYMPHORICARPOS ALBUS	SNOWBERRY	3 GAL./ 4'± O.C.	2,3	15		"
	DT	NWN	EG		VACCINIUM OVATUM	EVERGREEN HUCKLEBERRY	3 GAL./ 4'± O.C.	2,3	25		"

SHRUBS, GROUNDCOVERS & PERENNIALS

		NWN		<3' HT.	ASTER SUBSPICATUS	DOUGLAS ASTER	1 GAL./ 18" O.C.	2,3			SPR STD. DETAIL. NO. 32 93 13 & 32 93 36
		NWN			ATHYRIUM FILIX–FEMINA	LADY FERN	2 GAL./ 24"± O.C.	1,2			
		NWN	EG	<3' HT.	BLECHNUM SPICANT	DEER FERN	1 GAL./ 18" O.C.	2,3			"
	DT	NWN– CULTIVAR		<3' HT.	CORNUS SERICEA 'KELSEYI'	DWARF REDTWIG DOGWOOD	2 GAL./ 30" O.C.	2,3			"
		NWN	EG		GAULTHERIA SHALLON	SALAL	2 GAL./ 36"± O.C.	2,3			
		NWN	SEG	<3' HT.	IRIS TENAX	OREGON IRIS	1 GAL./ 18" O.C.	1,2,3			"
		NWN		<3' HT.	LYSICHITON AMERICANUS	SKUNK CABBAGE	1 GAL./ 18" O.C.	1			"
		NWN	EG		MAHONIA AQUIFOLIUM	TALL OREGON GRAPE	1 GAL./ 24" O.C.	2,3			"
	DT	NWN	EG	<3' HT.	MAHONIA NERVOSA	LONGLEAF MAHONIA	1 GAL./ 24" O.C.	2,3			"
		NWN	EG		POLYSTICHUM MUNITUM	SWORD FERN	1 GAL./ 24" O.C.	2,3			"
	DT	NWN– CULTIVAR		<3' HT.	POTENTILLA FRUTICOSA 'MONSIDH'	FROSTY POTENTILLA	2 GAL./ 24" O.C.	3			"
		NWN			SMILACINA RACEMOSUM	FALSE SOLOMONS SEAL	1 GAL./ 18" O.C.	2,3			"
		NWN		<3' HT.	SPIRAEA BETULIFOLIA VAR. LUCIDA	BIRCHLEAF SPIREA	2 GAL./ 30" O.C.	2,3			"
		NWN		<3' HT.	SYMPHORICARPOS MOLLIS	CREEPING SNOWBERRY	1 GAL./ 18" O.C.	2,3			"
	DT	NWN		<3' HT.	TELLIMA GRANDIFLORA	FRINGECUPS	1 GAL./ 18" O.C.	2,3			"
		NWN		<3' HT.	TOLMIEA MENZIESII	PIGGYBACK PLANT	1 GAL./ 18" O.C.	2,3			"
		NWN		<3' HT.	VANCOUVERIA HEXANDRA	INSIDEOUT FLOWER	1 GAL./ 18" O.C.	2,3			"
		NWN		<3' HT.	VIOLA PALUSTRIS	MARSH VIOLET	1 GAL./ 18" O.C.	1,2			"

EMERGENTS & GRASSES

		NWN	EG		CAREX CUSICKII	CUSICK'S SEDGE	10 CU. IN. PLUG/ 12" O.C.	1,2			SPR STD. DETAIL. NO. 32 93 36
		NWN		<3' HT.	CAREX LEPTOPODA (C. DEWEYANA VAR. LEPTOPODA)	SLENDER–FOOT SEDGE	10 CU. IN. PLUG/ 12" O.C.	1,2			"
		NWN	EG	<3' HT.	CAREX OBNUPTA	SLOUGH SEDGE	10 CU. IN. PLUG/ 12" O.C.	1,2			"
		NWN	SEG	<3' HT.	DESCHAMPSIA CESPITOSA	TUFTED HAIR GRASS	10 CU. IN. PLUG/ 12" O.C.	1,2,3			"
		NWN		<3' HT.	JUNCUS ENSIFOLIUS	DAGGER–LEAF RUSH	10 CU. IN. PLUG/ 12" O.C.	1,2			"
		NWN		<3' HT.	JUNCUS TENUIS	SLENDER RUSH	10 CU. IN. PLUG/ 12" O.C.	1,2			"
		NWN			SCIRPUS ATROCINCTUS (CYPERINUS)	WOOL BULRUSH	10 CU. IN. PLUG/ 12" O.C.	1,2			"
		NWN			SCIRPUS MICROCARPUS	SMALL–FRUITED BULRUSH	10 CU. IN. PLUG/ 12" O.C.	1,2			"

60% COMPLETE SIP
(NOT FOR CONSTRUCTION)

CREEK PLANT SCHEDULE

NATURE REVISIONS	MADE	CHK'D	REV'D

VAULT SERIAL NO.	DATE	MARK
35668		

SvR DESIGN COMPANY
1205 SECOND AVE. SUITE 200
SEATTLE, WA 98101
T 206.223.0326
F 206.223.0125
www.svrdesign.com

APPROVED FOR ADVERTISING
NANCY LOCKE
DEPARTMENT OF FINANCE & ADMINISTRATIVE SERVICES
SEATTLE, WASHINGTON 20

BY:
PURCHASING & CONTRACTING SERVICES DIRECTOR

NAME OR INITIALS AND DATE	INITIALS AND DATE
DESIGNED	REVIEWED:
CHECKED	DES. CONST.
	SDOT PROJ. MGR.
DRAWN	RECEIVED
CHECKED	REVISED AS BUILT

ALL WORK SHALL BE DONE IN ACCORDANCE WITH THE CITY OF SEATTLE STANDARD PLANS AND SPECIFICATIONS AND OTHER DOCUMENTS CALLED FOR IN SECTION 0–02.3 OF THE PROJECT MANUAL.

Seattle Public Utilities
City of Seattle
Ray Hoffman, Director

ORDINANCE NO. APPROVED
FUND:
SCALE: H. 1"=20', V. 1"=10' INSPECTOR'S BOOK

52ND AVE S CSO REDUCTION & LOWER MAPES CREEK RESTORATION

JOB NO: PC C311054, R/W, CO
VAULT PLAN NO. 774–889
SHEET 32 OF 53

P:\Project\C311054–Lower Mapes Creek Restoration\04–Design\A–Plot_Files\SvR\32 C301319–P–Site–Creek Restoration1.dwg
jonesjc Sep–06–12 3:11pm

LANDSCAPE NOTES

1. SEE CREEK RESTORATION PLAN (1 OF 2) FOR PLANT SCHEDULE.
2. TREES TO BE PRUNED AND LIMBED UP AS THEY GROW TO PROVIDE SIGHT LINES INTO PARK.
3. TREES ARE SHOWN AT APPROXIMATE 10 YEAR POST PLANTING SIZE.
4. SEE SHEET 36 FOR IRRIGATION DRAFT ZONING PLAN.
5. SEE TESC PLAN FOR TREE REMOVAL AND TRANSPLANTING.

IRRIGATION NOTES

1. UPPER AND LOWER CHANNEL PLANTING AREAS WILL BE IRRIGATED WTIH A FIXED SPRAY SYSTEM PER SEATTLE PARKS DEPARTMENT STANDARDS.
2. IRRIGATION REQUIREMENTS FOR LAWN AREAS TO BE DETERMINED BY SEATTLE PARKS DEPARTMENT.

N

20 10 0 20 40

SCALE IN FEET

BUFFER LIMIT BASED ON "LOWER MAPES CREEK RESTORATION PROJECT WETLAND DELINEATION REPORT" DATED JULY 2012

DELINEATED WETLAND BOUNDARY

EX. POPULUS (COTTONWOOD) TO BE REMOVED

EX. 3" THUJA PLICATA TO BE TRANSPLANTED

TRANSPLANTED THUJA PLICATA WITH WATERING BAG

TRANSPLANTED PSEUDOTSUGA MENZIESII WITH WATERING BAG

EX. 3" PSEUDOTSUGA MENZIESII TO BE TRANSPLANTED

BEER SHEVA PARK

SEWARD PARK AVE S

VIEW CORRIDOR WITH PLANTS ONLY 3' HT AND LOWER EXCEPT AQUATIC PLANTS ALONG STREAM EDGE (TYP)

PEDESTRIAN BRIDGE. SEE STRUCTURAL.

LIMITS OF WORK

60' WETLAND BUFFER

100' SHORELINE HABITAT ECA LIMIT

200' SHORELINE DISTRICT ECA LIMIT

RESTORE SHORELINE EDGE SIMILAR TO EXISITING TREATMENT WITH LOGS AND FLAT TOP 3-MAN ROCKS (1/32)

8' BENCH

6' BENCH

LAKE WASHINGTON

LAKE WASHINGTON ORDINAR =18.60' (NAD 88) =21.85' (COE BALLARD LO (AS PUBLISHED BY COE)

LEGEND

- ¼" MINUS CRUSHED ROCK PAVING PER SPR STD. DETAIL 32 15 43
- PRECAST REINFORCED TURF PAVING FILLED WITH ¼" MINUS CRUSHED ROCK (3/32)
- PRECAST REINFORCED TURF PAVING WITH LAWN (3/32)
- PEDESTRIAN BRIDGE. SEE STRUCTURAL.
- UPLAND WOODY DEBRIS AND BOULDERS TO PROVIDE HABITAT AND NUTRIENT LOADING IN THE UPLAND AREAS.
- CHANNEL PLANTING AREA
- REMOVE INVASIVE PLANTS AND RESTORE WITH LOW SHORELINE PLANTING (ZONE 1 PLANTS – SEE PLANT SCHEDULE)
- RESTORED PLANTING BED
- RESTORED LAWN
- 60' WETLAND BUFFER
- 100' SHORELINE HABITAT ECA LIMIT
- 200' SHORELINE DISTRICT ECA LIMIT
- LIMITS OF WORK
- TREE PROTECTION FENCE PER PARKS STANDARD PLANS
- TOP OF CHANNEL
- FIXED BOLLARD PER SPR STD DETAIL 12 93 63.26
- SPECIAL GRADING ACTIVITY AROUND EXISTING TREES

60% COMPLETE SIP
(NOT FOR CONSTRUCTION)

CREEK RESTORATON PLAN

NO.	REVISIONS	MADE	CHK'D	REV'D
	NATURE			

VAULT	SERIAL NO.	DATE	MARK
	35668		

SvR DESIGN COMPANY
1205 SECOND AVE. SUITE 200
SEATTLE, WA 98101
T 206.223.0326
F 206.223.0125
www.svrdesign.com

STATE OF WASHINGTON REGISTERED LANDSCAPE ARCHITECT
MARGARET ROSE STAEHELI
CERTIFICATE NO. 456
QA/QC REVIEWER

APPROVED FOR ADVERTISING
NANCY LOCKE
DEPARTMENT OF FINANCE & ADMINISTRATIVE SERVICES
SEATTLE, WASHINGTON 20
BY:
PURCHASING & CONTRACTING SERVICES DIRECTOR

NAME OR INITIALS AND DATE	INITIALS AND DATE
DESIGNED	REVIEWED:
CHECKED	DES. CONST.
	SDOT PROJ. MGR.
DRAWN	RECEIVED
CHECKED	REVISED AS BUILT

ALL WORK SHALL BE DONE IN ACCORDANCE WITH THE CITY OF SEATTLE STANDARD PLANS AND SPECIFICATIONS AND OTHER DOCUMENTS CALLED FOR IN SECTION 0-02.3 OF THE PROJECT MANUAL.

STATE OF WASHINGTON REGISTERED LANDSCAPE ARCHITECT
TERESA L. DAMASKE
CERTIFICATE NO. 1138

Seattle Public Utilities
City of Seattle
Ray Hoffman, Director
ORDINANCE NO. APPROVED
FUND:
SCALE: H. 1"=20', V. 1"=10' INSPECTOR'S BOOK

52ND AVE S CSO REDUCTION & LOWER MAPES CREEK RESTORATION

JOB NO: PC C311054; R/W; CO
VAULT PLAN NO. 774-889
SHEET 33 OF 53

P:\Project\C311054-Lower Mapes Creek Restoration\04-Design\A-Plot_Files\SvR\33 C301319-P-Site-Creek Restoration2.dwg
jonesjc Sep-06-12 3:11pm

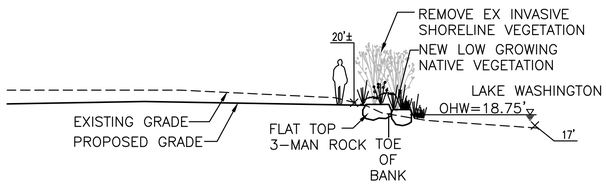

SHORELINE SECTION 1/32
NTS

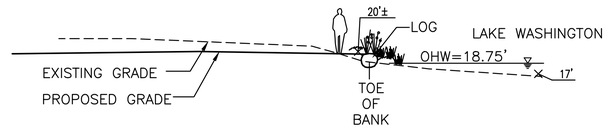

SHORELINE SECTION 2/32
NTS

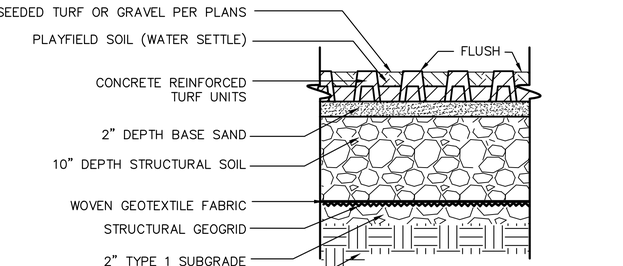

NOTE: SLOPE PER DRAINAGE PLAN.

NOTE:
1. PROVIDE PAVE EDGE INDUSTRIAL PAVER EDGE RESTRAINT (AS SUPPLIED BY PAVE TECH OR APPROVED EQUAL) AT LIMITS OF PAVERS. INSTALL PER SPECIFICAITONS.
2. THIS IS A MODIFIED VERSION OF SPR STD. DETAIL 32 13 13.19.

TURF PAVING 3/32
NTS

VAULT SERIAL NO.	DATE	MARK	NATURE REVISIONS	MADE	CHK'D	REV'D
35668						

P:\Project\C311054-Lower Mapes Creek Restoration\04-Design\A-Plot_Files\SvR\34 C301319-P-DETL-Creek Restoration.dwg
jonesjc Sep-06-12 3:11pm

60% COMPLETE SIP
(NOT FOR CONSTRUCTION)

SvR DESIGN COMPANY
1205 SECOND AVE. SUITE 200
SEATTLE, WA 98101
T 206.223.0326
F 206.223.0125
www.svrdesign.com

STATE OF WASHINGTON
REGISTERED
LANDSCAPE ARCHITECT

MARGARET ROSE STAEHELI
CERTIFICATE NO. 456
QA/QC REVIEWER

APPROVED FOR ADVERTISING
NANCY LOCKE
DEPARTMENT OF FINANCE & ADMINISTRATIVE SERVICES
SEATTLE, WASHINGTON 20

BY:
PURCHASING & CONTRACTING SERVICES DIRECTOR

NAME OR INITIALS AND DATE	INITIALS AND DATE
DESIGNED	REVIEWED:
CHECKED	DES. CONST.
	SDOT PROJ. MGR.
DRAWN	RECEIVED
CHECKED	REVISED AS BUILT

ALL WORK SHALL BE DONE IN ACCORDANCE WITH THE CITY OF SEATTLE STANDARD PLANS AND SPECIFICATIONS AND OTHER DOCUMENTS CALLED FOR IN SECTION 0-02.3 OF THE PROJECT MANUAL.

STATE OF WASHINGTON
REGISTERED
LANDSCAPE ARCHITECT

TERESA L. DAMASKE
CERTIFICATE NO. 1138

Seattle Public Utilities
City of Seattle
Ray Hoffman, Director

ORDINANCE NO. APPROVED
FUND:
SCALE: H. 1"=20', V. 1"=10' INSPECTOR'S BOOK

CREEK RESTORATION DETAILS

52ND AVE S CSO REDUCTION & LOWER MAPES CREEK RESTORATION

JOB NO. PC C311054
R/W
CO

VAULT PLAN NO. 774-889

SHEET 34 OF 53

IRRIGATION NOTES

1. UPPER AND LOWER CHANNEL PLANTING AREAS WILL BE IRRIGATED WTIH A FIXED SPRAY SYSTEM PER SEATTLE PARKS DEPARTMENT STANDARDS.
2. IRRIGATION REQUIREMENTS FOR LAWN AREAS TO BE DETERMINED BY SEATTLE PARKS DEPARTMENT.
3. IRRIGATION TO CONNECT TO EXISTING BOAT RAMP CONTROLLER.
4. EXISTING METER BACKFLOW PREVENTOR AND CONTROLLER TO REMAIN.

BEER SHEVA PARK

PEDESTRIAN BRIDGE AND FOOTINGS. SEE STRUCTURAL.

IRRIGATION SLEEVE (TYP)

IRRIGATION SLEEVE ATTACHED TO BRIDGE

ZONE 10

ZONE 11

ZONE 12

ZONE 9

CENTER OF BRIDGE

RELOCATE ELECTRICAL CONDUIT. COORDINATE WITH PARKS.

LAWN ZONE (TBD)

LAWN ZONE NOT IRRIGATED

REMOVE EX. VALVE (TBD)

POINT OF CONNECTION

REMOVE EX. VALVE (TBD)

EXISTING CONTROLLER IN BLDG. ESP–12MC (4 SPARE ZONES – TBD)

REPAIR QUICK COUPLER ZONES ALONG STREET

EXISTING WATER METER

S HENDERSON ST

LAKE WASHINGTON

LAKE WASHINGTON ORDINARY HIGH W/ =18.60' (NAD 88) =21.85' (COE BALLARD LOCKS DATU (AS PUBLISHED BY COE)

N

20 10 0 20 40

SCALE IN FEET

LEGEND

- IRRIGATION ZONES
- WM WATER METER

STATIC PRESSURE =124.7 PSI

60% COMPLETE SIP
(NOT FOR CONSTRUCTION)

IRRIGATION DRAFT ZONING PLAN

NO.	DATE	MARK	MADE	CHK'D	REV'D

NATURE REVISIONS

VAULT SERIAL NO. 35668

SvR DESIGN COMPANY
1205 SECOND AVE, SUITE 200
SEATTLE, WA 98101
T 206.223.0326
F 206.223.0125
www.svrdesign.com

STATE OF WASHINGTON REGISTERED LANDSCAPE ARCHITECT
MARGARET ROSE STAEHELI
CERTIFICATE NO. 456
QA/QC REVIEWER

APPROVED FOR ADVERTISING
NANCY LOCKE
DEPARTMENT OF FINANCE & ADMINISTRATIVE SERVICES
SEATTLE, WASHINGTON 20
BY:
PURCHASING & CONTRACTING SERVICES DIRECTOR

NAME OR INITIALS AND DATE	INITIALS AND DATE
DESIGNED	REVIEWED: DES. CONST. SDOT PROJ. MGR.
CHECKED	
DRAWN	RECEIVED
CHECKED	REVISED AS BUILT

ALL WORK SHALL BE DONE IN ACCORDANCE WITH THE CITY OF SEATTLE STANDARD PLANS AND SPECIFICATIONS AND OTHER DOCUMENTS CALLED FOR IN SECTION 0-02.3 OF THE PROJECT MANUAL.

STATE OF WASHINGTON REGISTERED LANDSCAPE ARCHITECT
TERESA L. DAMASKE
CERTIFICATE NO. 1138

Seattle Public Utilities
City of Seattle
Ray Hoffman, Director
ORDINANCE NO. APPROVED
FUND:
SCALE: H. 1"=20', V. 1"=10' INSPECTOR'S BOOK

52ND AVE S CSO REDUCTION & LOWER MAPES CREEK RESTORATION

JOB NO. PC C311054 R/W CO
VAULT PLAN NO. 774–889
SHEET 35 OF 53

P:\Project\C311054-Lower Mapes Creek Restoration\04-Design\A-Plot_Files\SvR\35 C301319-P-IRRG.dwg
jonesjc Sep-06-12 3:12pm

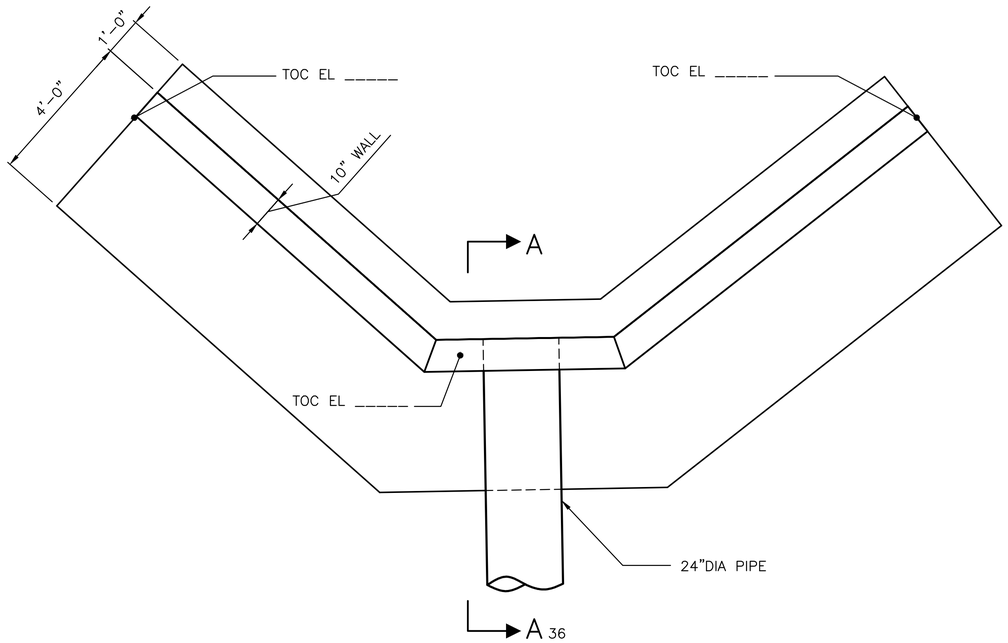

HEADWALL PLAN 1/33
1/2" = 1'-0"

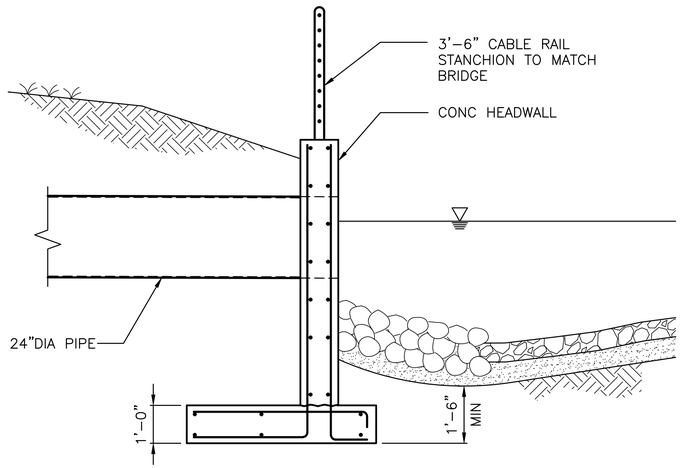

SECTION A-A 36
1/2" = 1'-0"

GENERAL STRUCTURAL NOTES

DESIGN CRITERIA

APPLICABLE BUILDING NOTES AND CODES
INTERNATIONAL BUILDING CODE, IBC 2009 EDITION, EXCEPT WHERE OTHER CODES ARE MORE RESTRICTIVE.

LIVE LOADS
- PEDESTRIAN BRIDGE 90psf
- SNOW 25psf

WIND LOADS
- BASIC WIND SPEED 85mph
- EXPOSURE C
- IMPORTANCE FACTOR, Iw 1.0

SEISMIC LOADS
- PEAK GROUND ACCELERATION, PGA 0.64g
- MAPPED AND DESIGN SPECTRAL ACCELERATIONS:
- SHORT PERIODS, S_s = ... 1.51
- 1 SECOND PERIOD, S_1 = ... 0.52
- SHORT PERIOD, S_{DS} 1.0
- 1 SECOND PERIOD, S_{D1} 0.52
- IMPORTANCE FACTOR, I_e =..... 1.0
- SITE CLASS =..... D
- OCCUPANCY RISK CATEGORY II
- RESPONSE MODIFICATION COEFFICIENT, R = 3.0

FOUNDATION

PER GEOTECHNICAL REPORT PREPARED BY SPU GEOTECHNICAL ENGINEERING, DATED JULY 2012

DESIGN SOIL BEARING PRESSURES
- SPREAD FOOTING ON STRUCTURAL FILL 2,000psf
- ALL SLABS ON GRADE AND FOOTINGS SHALL BEAR ON COMPACTED GRANULAR FILL AS SPECIFIED, MINIMUM THICKNESS 6 INCHES.
- DEPTH OF FOOTING BELOW FINISHED GRADE – 18 INCHES MINIMUM.

DESIGN SOIL LATERAL PRESSURES
- YIELDING WALL (ACTIVE PRESSURES)
- DRAINED CONDITION ..... 41H pcf

- PASSIVE PRESSURE
- DRAINED CONDITION ..... 300D pcf

COEFFICIENT OF BASE FRICTION 0.35

PROVIDE ADEQUATE SUPPORT TO WALLS AGAINST BACKFILL PLACEMENT AND MAINTAIN SUPPORTS UNTIL ADJOINING FLOOR SYSTEMS HAVE BEEN INSTALLED. SHORE ALL EXCAVATIONS AS REQUIRED.

CONCRETE

ALL DETAILING, FABRICATION AND ERECTION OF REINFORCING BARS, UNLESS OTHERWISE NOTED, SHALL BE IN ACCORDANCE WITH MANUAL OF STANDARD PRACTICE FOR DETAILING REINFORCED CONCRETE STRUCTURES ACI 315, LATEST EDITION. CONCRETE CONSTRUCTION SHALL CONFORM TO ACI 318 BUILDING CODE, LATEST EDITION.

DESIGN STRENGTH
- CAST-IN-PLACE CONCRETE, UNLESS OTHERWISE NOTED
- f'c = 4000 psi AT 28 DAYS

REINFORCING STEEL SHALL BE IN ACCORDANCE WITH ASTM A615, GRADE 60.

ANCHOR BOLTS
- ANCHOR BOLTS SHALL CONFORM TO ASTM F1554 GRADE 36 AS NOTED IN THE PLANS. SET ALL BOLTS BY TEMPLATE.

STEEL

MATERIAL
- ALL STRUCTURAL STEEL SHALL CONFORM TO THE FOLLOWING ASTM DESIGNATIONS UNLESS NOTED OTHERWISE ON THE DRAWINGS:

WIDE FLANGE SHAPES ASTM A992 OR ASTM A572, GRADE 50

TEES, CHANNELS, ANGLES, PLATES AND BARS A36, UNLESS OTHERWISE NOTED

HOLLOW STRUCTURAL SECTIONS(HSS)
- SQUARE AND RECTANGULAR, HSS ASTM A500, GRADE B, FY = 46 KSI
- ROUND, HSS ASTM A500, GRADE B, FY = 42 KSI

PIPES ASTM A53, GRADE B, FY = 35 KSI

MACHINE BOLTS SHALL BE ASTM A307 AND SHALL BE PROVIDED WITH LOCK NUT WASHERS UNDER NUTS OR SELF LOCKING NUTS.

WELDING
- ALL WELDING SHALL CONFORM TO AWS D1.1 WELDING CODE. MINIMUM SIZE WELDS 3/16" CONTINUOUS FILLET. WELDING ELECTRODES SHALL BE 70XX SERIES CONFORMING TO ANSI/AWS D1.1 TABLE 3.1 AND ELECTRODE SPECIFICATION AWS A5. WELDING SHALL BE CONDUCTED BY WABO CERTIFIED WELDER.

PAINTING AND GALVANIZING
- STRUCTURAL STEEL SHALL BE PAINTED OR GALVANIZED IN CONFORMANCE WITH SPECIFICATIONS.

SPECIAL INSPECTION

THE FOLLOWING ITEMS REQUIRE SPECIAL INSPECTION PER IBC SECTION 1704.

CONCRETE	CONCRETE WHICH IS PART OF THE STRUCTURE.
BOLTS INSTALLED IN CONCRETE	ANCHOR BOLTS.
HIGH STRENGTH BOLTING	SEE SPECIFICATIONS FOR INSPECTION AND TESTING PROCEDURES.

60% COMPLETE SIP
(NOT FOR CONSTRUCTION)

STRUCTURAL PLAN

NO.	DATE	MARK	NATURE REVISIONS	MADE	CHK'D	REV'D

VAULT SERIAL NO. 35668

SvR DESIGN COMPANY
1205 SECOND AVE, SUITE 200
SEATTLE, WA 98101
T 206.223.0326
F 206.223.0125
www.svrdesign.com

APPROVED FOR ADVERTISING
NANCY LOCKE
DEPARTMENT OF FINANCE & ADMINISTRATIVE SERVICES
SEATTLE, WASHINGTON 20
BY:
PURCHASING & CONTRACTING SERVICES DIRECTOR

NAME OR INITIALS AND DATE	INITIALS AND DATE
DESIGNED	REVIEWED: DES. CONST. SDOT PROJ. MGR.
CHECKED	
DRAWN	RECEIVED
CHECKED	REVISED AS BUILT

ALL WORK SHALL BE DONE IN ACCORDANCE WITH THE CITY OF SEATTLE STANDARD PLANS AND SPECIFICATIONS AND OTHER DOCUMENTS CALLED FOR IN SECTION 0-02.3 OF THE PROJECT MANUAL.

STATE OF WASHINGTON 19813 STRUCTURAL ENGINEER PROFESSIONAL ENGINEER

Seattle Public Utilities
City of Seattle
Ray Hoffman, Director
ORDINANCE NO. APPROVED
FUND:
SCALE: H. 1"=20', V. 1"=10' INSPECTOR'S BOOK

52ND AVE S CSO REDUCTION & LOWER MAPES CREEK RESTORATION

JOB NO. PC C311054 R/W CO
VAULT PLAN NO. 774-889
SHEET 36 OF 53

P:\Project\C311054-Lower Mapes Creek Restoration\04-Design\A-Plot_Files\SvR\36 C301319-P-STRU.dwg
jonesjc Sep-06-12 3:12pm

REGION NO.	STATE	FEDERAL AID PROJECT NO.	SHEET NO.
10	WA		37

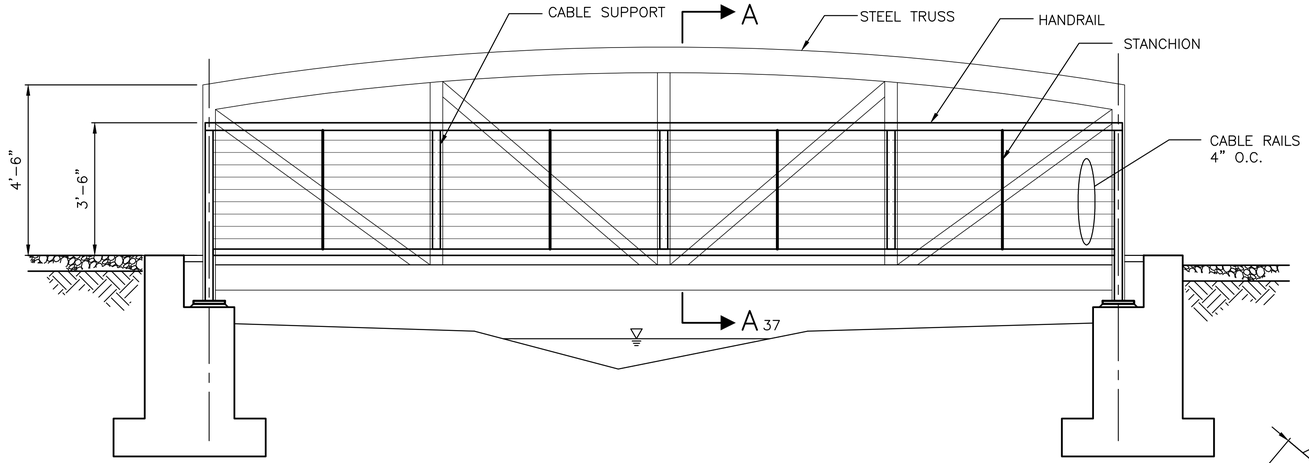

BRIDGE ELEVATION 1/33
1/2" = 1'-0"

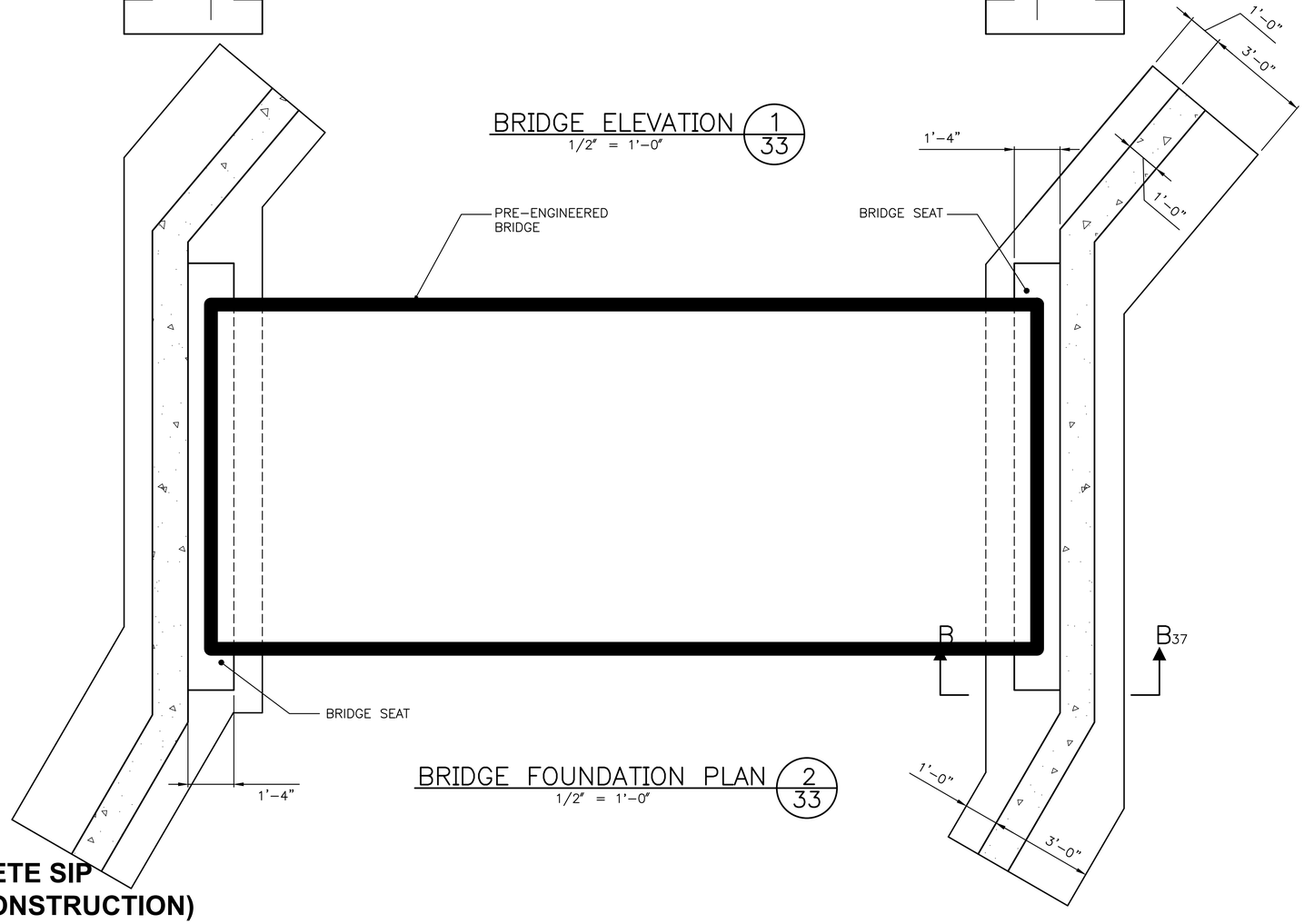

BRIDGE FOUNDATION PLAN 2/33
1/2" = 1'-0"

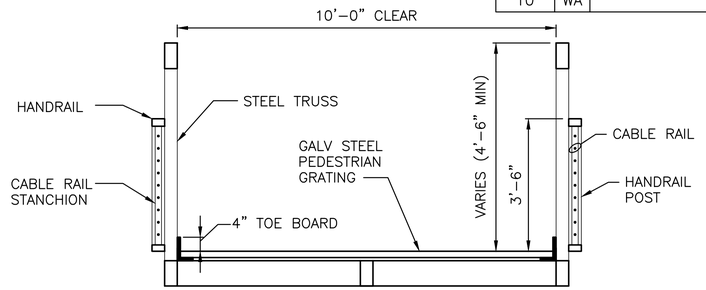

SECTION A-A 37
1/2" = 1'-0"

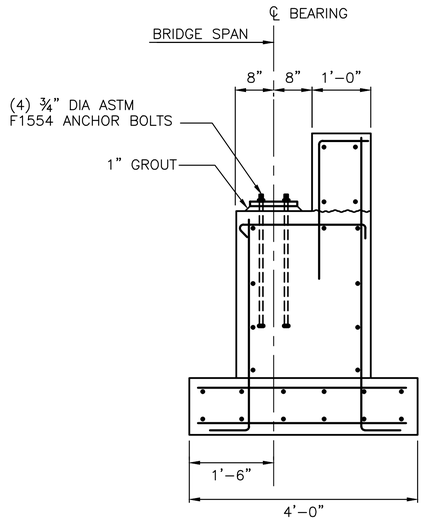

SECTION B-B 37
3/4" = 1'-0"

60% COMPLETE SIP
(NOT FOR CONSTRUCTION)

STRUCTURAL DETAILS

NO.	MARK	DATE	NATURE OF REVISIONS	MADE	CHK'D	REV'D
VAULT SERIAL NO. 35668						

SvR DESIGN COMPANY
1205 SECOND AVE. SUITE 200
SEATTLE, WA 98101
T 206.223.0326
F 206.223.0125
www.svrdesign.com

APPROVED FOR ADVERTISING
NANCY LOCKE
DEPARTMENT OF FINANCE & ADMINISTRATIVE SERVICES
SEATTLE, WASHINGTON 20
BY:
PURCHASING & CONTRACTING SERVICES DIRECTOR

NAME OR INITIALS AND DATE	INITIALS AND DATE
DESIGNED	REVIEWED:
CHECKED	DES. CONST.
	SDOT PROJ. MGR.
DRAWN	RECEIVED
CHECKED	REVISED AS BUILT

ALL WORK SHALL BE DONE IN ACCORDANCE WITH THE CITY OF SEATTLE STANDARD PLANS AND SPECIFICATIONS AND OTHER DOCUMENTS CALLED FOR IN SECTION 0-02.3 OF THE PROJECT MANUAL.

STATE OF WASHINGTON 19813 STRUCTURAL ENGINEER PROFESSIONAL ENGINEER

Seattle Public Utilities
City of Seattle
Ray Hoffman, Director
ORDINANCE NO. APPROVED
FUND:
SCALE: H. 1"=20', V. 1"=10' INSPECTOR'S BOOK

52ND AVE S CSO REDUCTION & LOWER MAPES CREEK RESTORATION

JOB NO. PC C311054 R/W CO
VAULT PLAN NO. 774-889
SHEET 37 OF 53

P:\Project\C311054-Lower Mapes Creek Restoration\04-Design\A-Plot_Files\SvR\37 C301319-P-DETL-STRU.dwg
jonesjc Sep-06-12 3:12pm

MATCHLINE STA 37+90 – SEE BELOW

S HENDERSON ST

B/39 PLANTING PLAN ENLARGEMENT

METAL FENCE TO BE SALVAGED & REINSTALLED SEE CIVIL DWG

A/39 PLANTING PLAN ENLARGEMENT

MULTI–TRUNK DECIDUOUS TREE PLANTING DETAIL, TYP 2/42

RIGHT–OF–WAY, TYP

2/43 LAWN AREA PREPARATION DETAIL, TYP

EX CONCRETE WALKWAYS TO BE RESTORED. SEE CIVIL DWGS.

MEET AND MATCH LIMITS WITH A SMOOTH TRANSITION. LIMITS OF SEED LAWN EQUALS LIMITS OF SITE DISTURBANCE, TYP

S.E.E.D. HOUSING, TYP

MATCHLINE STA 37+90 – SEE ABOVE

B/39 PLANTING PLAN ENLARGEMENT

S HENDERSON ST

52ND AVE S

1/42 DECIDUOUS TREE PLANTING DETAIL, TYP

MEET AND MATCH LIMITS WITH A SMOOTH TRANSITION. LIMITS OF SEED LAWN EQUALS LIMITS OF SITE DISTURBANCE, TYP

10' WIDE ASPHALT PATH, SEE CIVIL DWG'S

RIGHT–OF–WAY, TYP

EX TREES TO REMAIN, TREE PROTECTION REQUIRED, SEE SHEET 4, TYP

MATCHLINE STA 14+50 – SEE SHT 40

NOTE:

1. SEE SHEET 41 FOR PLANTING SCHEDULE & PLANTING NOTES.
2. FOR EXISTING TREES TO REMAIN OR TO BE REMOVED, SEE SHEET 4, TYP.

NOTES TO REVIEWER:

1. THE TREES REMOVED WITHIN THE S.E.E.D. HOUSING FENCE LINE ARE NOT CONSIDERED IN THE FORMULA FOR REPLACEMENT.

2. ALL OTHER TREES REMOVED WITHIN THE RIGHT OF WAY ARE REPLACED 2 FOR 1 IN ACCORDANCE WITH THE MAYOR'S EXECUTIVE ORDER 03–05.

20 10 0 20 40
SCALE IN FEET

PLANTING PLAN (1 OF 2)

60% COMPLETE SIP
(NOT FOR CONSTRUCTION)

NO.	DATE	MARK	NATURE REVISIONS	MADE	CHK'D	REV'D
VAULT SERIAL NO. 35668						

HBB
LANDSCAPE ARCHITECTURE
215 WESTLAKE AVENUE NORTH 206.682.3051 phone
SEATTLE, WA 98109 206.682.3245 fax

APPROVED FOR ADVERTISING
NANCY LOCKE
DEPARTMENT OF FINANCE & ADMINISTRATIVE SERVICES
SEATTLE, WASHINGTON 20
BY:
PURCHASING & CONTRACTING SERVICES DIRECTOR

NAME OR INITIALS AND DATE	INITIALS AND DATE
DESIGNED	REVIEWED: DES. CONST. SDOT PROJ. MGR.
CHECKED	
DRAWN	RECEIVED
CHECKED	REVISED AS BUILT

ALL WORK SHALL BE DONE IN ACCORDANCE WITH THE CITY OF SEATTLE STANDARD PLANS AND SPECIFICATIONS AND OTHER DOCUMENTS CALLED FOR IN SECTION 0–02.3 OF THE PROJECT MANUAL.

STATE OF WASHINGTON
LICENSED
LANDSCAPE ARCHITECT
JULIET B. VONG
LICENSED NO. 857
EXPIRES ON

Seattle Public Utilities
City of Seattle
Ray Hoffman, Director
ORDINANCE NO. APPROVED
FUND:
SCALE: H. 1"=20', V. 1"=10' INSPECTOR'S BOOK

52ND AVE S CSO REDUCTION & LOWER MAPES CREEK RESTORATION

JOB NO. PC C311054 R/W CO
VAULT PLAN NO. 774–889
SHEET 38 OF 53

P:\Project\C311054–Lower Mapes Creek Restoration\04–Design\A–Plot_Files\HBB\38 C311054–P–VEGE1.dwg
jonesjc Sep–06–12 3:12pm

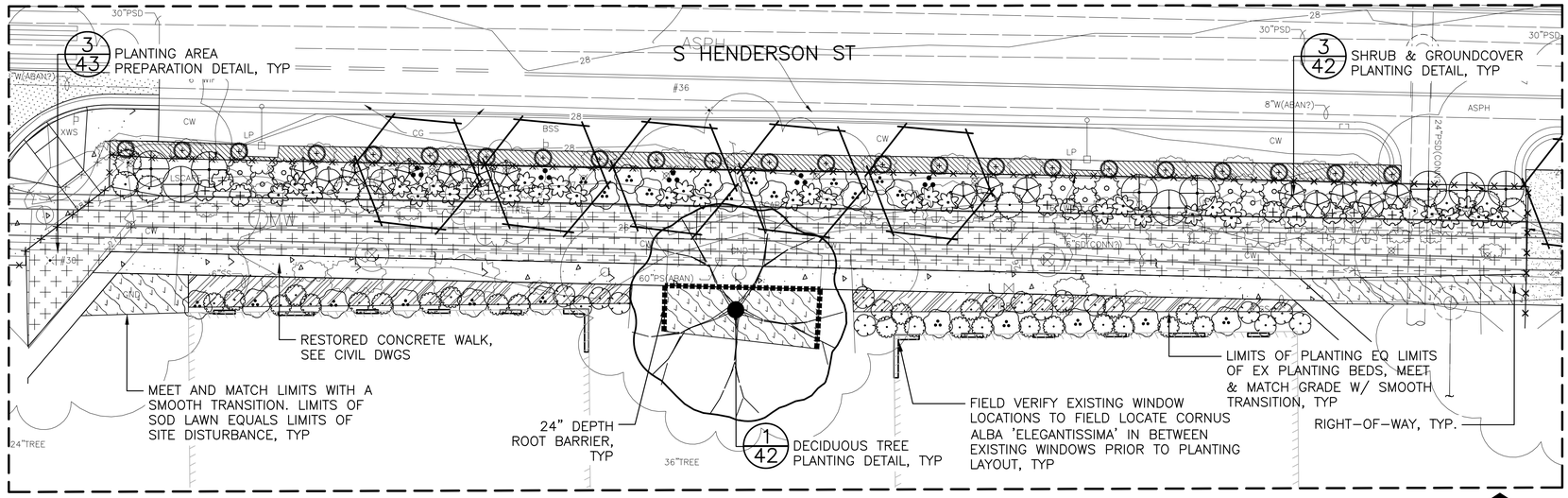

ENLARGEMENT A

A/37

10 5 0 10 20
SCALE IN FEET

N

NOTE:

1. SEE SHEET 41 FOR PLANTING SCHEDULE & PLANTING NOTES.
2. FOR EXISTING TREES TO REMAIN OR TO BE REMOVED, SEE SHEET 4, TYP.

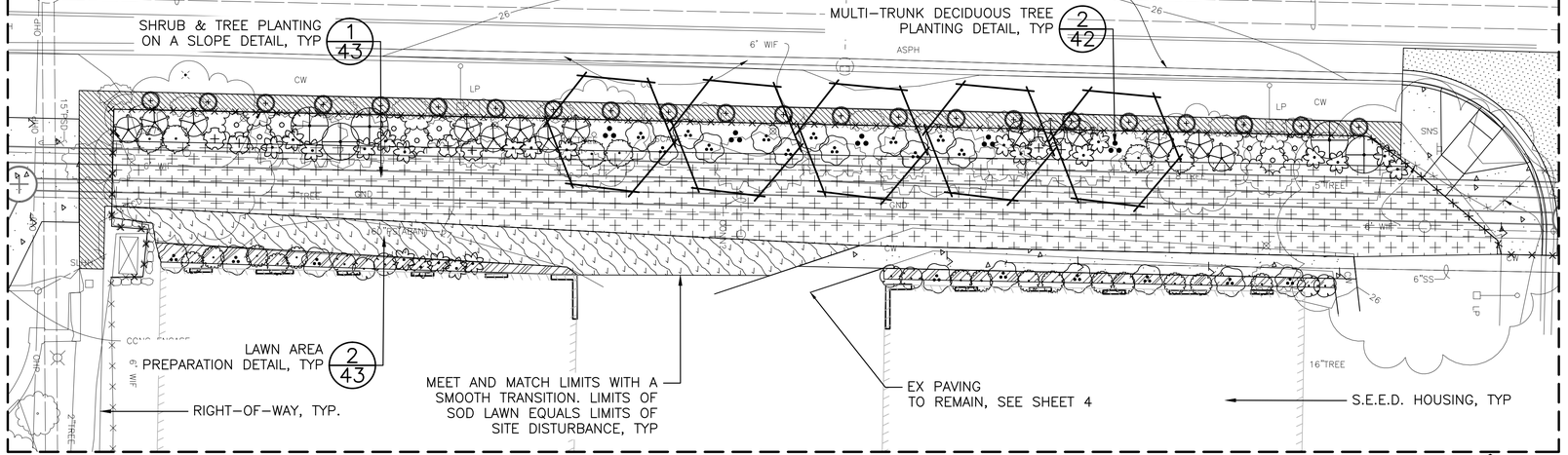

ENLARGEMENT B

B/37

10 5 0 10 20
SCALE IN FEET

N

60% COMPLETE SIP
(NOT FOR CONSTRUCTION)

NATURE REVISIONS

MARK	DATE	MADE	CHK'D	REV'D

VAULT SERIAL NO. 35668

HBB
LANDSCAPE ARCHITECTURE
215 WESTLAKE AVENUE NORTH 206.682.3051 phone
SEATTLE, WA 98109 206.682.3245 fax

APPROVED FOR ADVERTISING
NANCY LOCKE
DEPARTMENT OF FINANCE & ADMINISTRATIVE SERVICES
SEATTLE, WASHINGTON 20

BY:
PURCHASING & CONTRACTING SERVICES DIRECTOR

NAME OR INITIALS AND DATE	INITIALS AND DATE
DESIGNED	REVIEWED:
CHECKED	DES. CONST.
	SDOT PROJ. MGR.
DRAWN	RECEIVED
CHECKED	REVISED AS BUILT

ALL WORK SHALL BE DONE IN ACCORDANCE WITH THE CITY OF SEATTLE STANDARD PLANS AND SPECIFICATIONS AND OTHER DOCUMENTS CALLED FOR IN SECTION 0-02.3 OF THE PROJECT MANUAL.

STATE OF WASHINGTON
LICENSED LANDSCAPE ARCHITECT

JULIET B. VONG
LICENSED NO. 857
EXPIRES ON _____

Seattle Public Utilities
City of Seattle
Ray Hoffman, Director

ORDINANCE NO. APPROVED
FUND:
SCALE: H. 1"=20', V. 1"=10' INSPECTOR'S BOOK

PLANTING PLAN ENLARGEMENTS

52ND AVE S CSO REDUCTION & LOWER MAPES CREEK RESTORATION

JOB NO. PC C311054 R/W CO
VAULT PLAN NO. 774-889
SHEET 39 OF 53

P:\Project\C311054-Lower Mapes Creek Restoration\04-Design\A-Plot_Files\HBB\39 C311054-P-VEGE2.dwg
jonesjc Sep-06-12 3:12pm

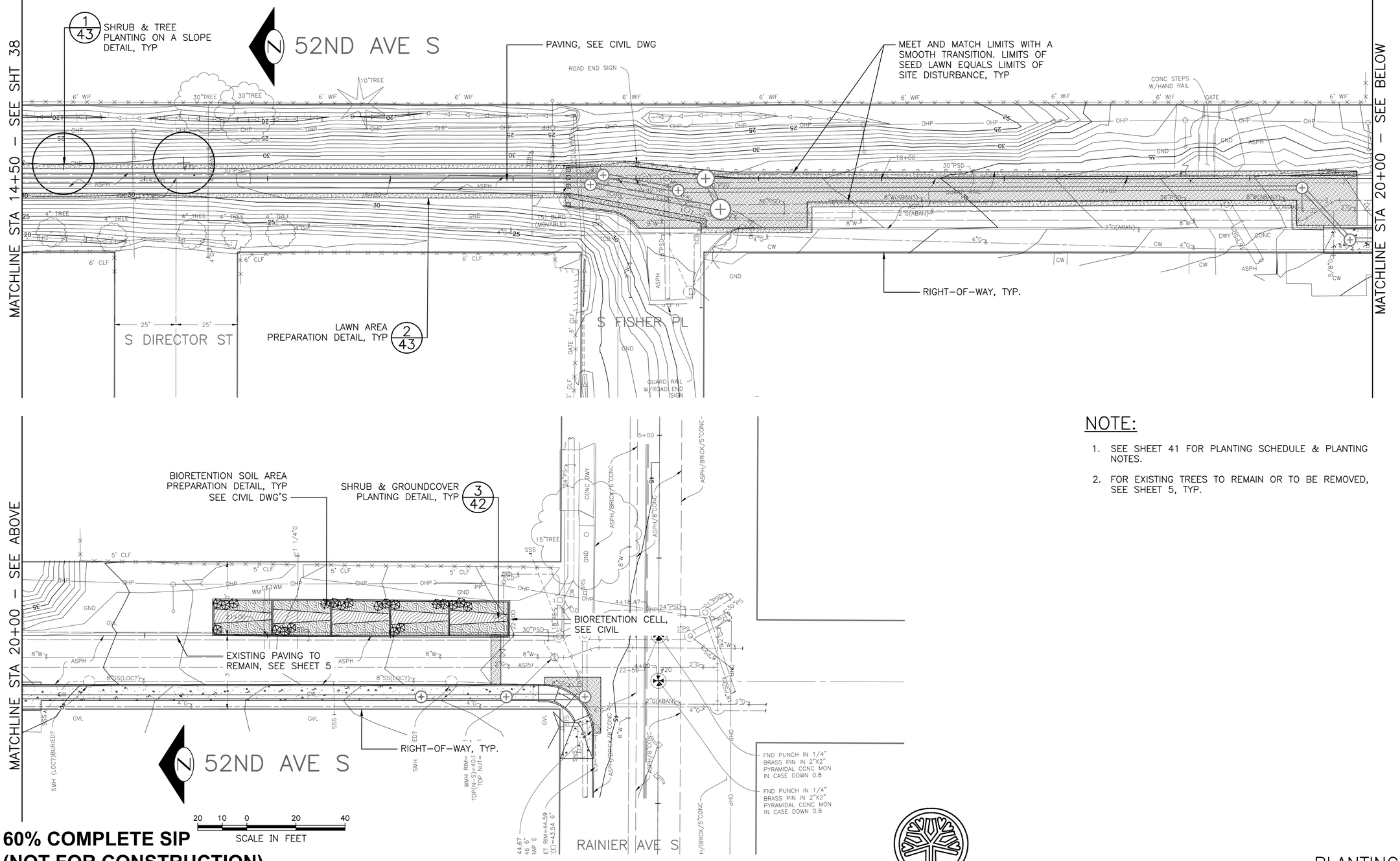

NOTE:

1. SEE SHEET 41 FOR PLANTING SCHEDULE & PLANTING NOTES.
2. FOR EXISTING TREES TO REMAIN OR TO BE REMOVED, SEE SHEET 5, TYP.

60% COMPLETE SIP
(NOT FOR CONSTRUCTION)

PLANTING PLAN (2 OF 2)

NATURE REVISIONS	DATE	MARK	VAULT SERIAL NO. 35668

REV'D	CHK'D	MADE

HBB
LANDSCAPE ARCHITECTURE
215 WESTLAKE AVENUE NORTH 206.682.3051 phone
SEATTLE, WA 98109 206.682.3245 fax

APPROVED FOR ADVERTISING
NANCY LOCKE
DEPARTMENT OF FINANCE & ADMINISTRATIVE SERVICES
SEATTLE, WASHINGTON 20
BY:
PURCHASING & CONTRACTING SERVICES DIRECTOR

NAME OR INITIALS AND DATE	INITIALS AND DATE
DESIGNED	REVIEWED:
CHECKED	DES. CONST.
	SDOT PROJ. MGR.
DRAWN	RECEIVED
CHECKED	REVISED AS BUILT

ALL WORK SHALL BE DONE IN ACCORDANCE WITH THE CITY OF SEATTLE STANDARD PLANS AND SPECIFICATIONS AND OTHER DOCUMENTS CALLED FOR IN SECTION 0-02.3 OF THE PROJECT MANUAL.

STATE OF WASHINGTON
LICENSED
LANDSCAPE ARCHITECT
JULIET B. VONG
LICENSED NO. 857
EXPIRES ON _____

Seattle Public Utilities
City of Seattle
Ray Hoffman, Director
ORDINANCE NO. APPROVED
FUND:
SCALE: H. 1"=20', V. 1"=10' INSPECTOR'S BOOK

52ND AVE S CSO REDUCTION & LOWER MAPES CREEK RESTORATION

JOB NO: PC C311054, R/W, CO
VAULT PLAN NO. 774–889
SHEET 40 OF 53

P:\Project\C311054–Lower Mapes Creek Restoration\04–Design\A–Plot_Files\HBB\40 C311054–P–VEGE3.dwg
jonesjc Sep–06–12 3:12pm

PLANTING SCHEDULE

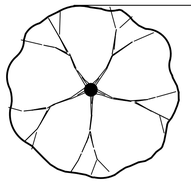

LARGE DECIDUOUS TREE

QTY	SCIENTIFIC/COMMON NAME	SIZE/REMARKS
1	ACER SACCHARUM 'BONFIRE'/ BONFIRE SUGAR MAPLE	3" CAL; B&B; FULL & WELL BRANCHED. SINGLE TRUNK & SYMMETRICAL BRANCHING HABIT. MIN 6' BRANCHING HEIGHT.

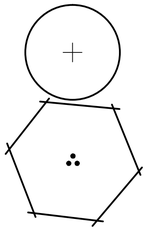

SMALL DECIDUOUS TREES

QTY	SCIENTIFIC/COMMON NAME	SIZE/REMARKS
11	ROBINIA X AMBIGUA 'PURPLE ROBE'/ PURPLE ROBE LOCUST	2" CAL; B&B; FULL & WELL BRANCHED. STRAIGHT LEADER & SYMMETRICAL BRANCHING HABIT.
12	STEWARTIA PSEUDOCAMELLIA/ JAPANESE STEWARTIA	7'–8' HT; B&B; FULL & WELL BRANCHED. MULTI TRUNKED W/ MIN THREE TRUNKS.

SHRUBS:

SYM	QTY	SCIENTIFIC/COMMON NAME	SIZE/REMARKS
	44	CORNUS ALBA 'ELEGANTISSIMA'/ VARIEGATED DOGWOOD	5 GAL CONT; FULL, WELL BRANCHED & WELL ROOTED.
	39	SARCOCOCCA RUSCIFOLIA/ FRAGRANT SWEETBOX	2 GAL CONT; FULL, WELL BRANCHED & WELL ROOTED.
	23	RHODODENDRON X YAK. 'PRINCESS'/ YAKU PRINCESS RHODODENDRON	2 GAL CONT; FULL, WELL BRANCHED & WELL ROOTED.
	45	THUJA PLICATA 'EMERALD GREEN'/ EMERALD GREEN ARBORVITAE	6'–7' HT; B&B; FULL & WELL BRANCHED & WELL ROOTED
	18	VIBURNUM DAVIDII/ DAVID'S VIBURNUM	2 GAL CONT; FULL, WELL BRANCHED & WELL ROOTED.
	51	RIBES SANGUINEUM/ RED FLOWERING CURRANT	5 GAL CONT; FULL, WELL BRANCHED & WELL ROOTED.
	17	TAXUS BACCATA 'REPANDENS'/ ENGLISH SPREADING YEW	5 GAL CONT; FULL, WELL BRANCHED & WELL ROOTED.
	54	POLYSTICHUM MUNITUM/ WESTERN SWORD FERN	1 GAL CONT; FULL, WELL BRANCHED & WELL ROOTED.
	18	CHAMAECYPARIS PISIFERA 'BOULEVARD'/ BOULEVARD FALSECYPRESS	4'–5' HT; B&B; FULL & WELL BRANCHED & WELL ROOTED
	14	VIBURNUM PLICATUM VAR TOMENTOSUM 'SUMMER SNOWFLAKE'/ SUMMER SNOWFLAKE DOUBLEFILE VIBURNUM	5 GAL CONT; FULL, WELL BRANCHED & WELL ROOTED.

LOW GROUNDCOVER MIX:

SYM	QTY	PLANTS PER GROUPING	SCIENTIFIC/COMMON NAME	SIZE/REMARKS
	203	5–7	ASTILBE SIMPLICIFOLIA 'SPRITE' SPRITE DWARF ASTILBE	1 GAL CONT; FULL, WELL ROOTED. TRIANGULAR SPACING @ 24" OC W/ 12" OFFSET FROM EDGE OF PAVING.
	122	5–7	BLECHNUM SPICANT/DEER FERN	
	41	7–10	OXALIS OREGANA/REDWOOD SORREL	
	41	7–10	EPIMEDIUM X 'RUBRUM'/ RED BISHOP'S HAT	
	256	5–7	EPIMEDIUM X 'RUBRUM'/ RED BISHOP'S HAT	1 GAL CONT; FULL, WELL ROOTED. TRIANGULAR SPACING @ 24" OC W/ 12" OFFSET FROM EDGE OF PAVING.
	256	5–7	POLYSTICHUM POLYBLEPHARUM/ TASSEL FERN	
	256	5–7	SARCOCOCCA HOOK. VAR 'HUMULIS'/ DWARF SWEETBOX	
	256	7–10	OXALIS OREGANA/REDWOOD SORREL	
	256	3–5	POLYSTICHUM MUNITUM/ WESTERN SWORDFERN	
	321		ARCTOSTAPHYLOS UVA–URSI/ KINNIKINNICK	1 GAL CONT; FULL, WELL ROOTED. TRIANGULAR SPACING @ 24" OC W/ 12" OFFSET FROM EDGE OF PAVING.

BIORETENTION CELLS MIX

SYM	QTY	PLANTS PER GROUPING	SCIENTIFIC/COMMON NAME	SIZE/REMARKS
	341	5–15	IRIS TENAX/OREGON IRIS	1 GAL CONT; FULL, WELL ROOTED. TRIANGULAR SPACING @ 12" OC W/ 12" OFFSET FROM EDGE OF BIORETENTION GRATE
	568	5–15	CAREX OBNUPTA/SLOUGH SEDGE	
	227	5–15	LUPINUS POLYPHYLLUS/BIGLEAF LUPINE	
	119	5–15	CORNUS SERICEA 'KELSEYI'/ KELSEYI DOGWOOD	1 GAL CONT; FULL, WELL BRANCHED & WELL ROOTED. TRIANGULAR SPACING @ 36" OC W/ 18" OFFSET FROM EDGE OF CURB OR PAVING.
	59	5–15	ROSA RUGOSA 'PAVEMENT SERIES'/ PAVEMENT RUGOSA ROSE	
	59	5–15	SALIX PURPUREA 'NANA'/ DWARF PURPLE WILLOW	
	1,264 SF		SOD LAWN	SEE SPECS
	8,658 SF		SEED LAWN	SEE SPECS

PLANTING ABBREVIATIONS

#/NO.	NUMBER	EQUIV	EQUIVALENT
%	PERCENT	EX	EXISTING
+	PLUS	GAL	GALLON
&	AND	H	HORIZONTAL
(–)	MINUS	HT	HEIGHT
@	AT	LF	LINEAR FEET
APPROX	APPROXIMATE	MAX	MAXIMUM
B&B	BALLED AND BURLAPPED	MFR'S	MANUFACTURERS
℄	CENTER LINE	MIN	MINIMUM
CF	CUBIC FEET	NTS	NOT TO SCALE
CAL	CALIPER	OC	ON CENTER
CLR	CLEARANCE	QTY	QUANTITY
CONC	CONCRETE	R	RADIUS
CONST	CONSTRUCTION	SCH	SCHEDULE
CONT	CONTAINER	SF	SQUARE FOOT
DIA/Ø	DIAMETER	SPECS	SPECIFICATIONS
DWG,DWG'S	DRAWING(S)	SQ	SQUARE
ELEV	ELEVATION	STA	STATION
ENG	ENGINEER	STD	STANDARD
EQ/=	EQUAL	SYM	SYMBOL
S.E.E.D.	SOUTHEAST EFFECTIVE DEVELOPMENT	TYP	TYPICAL
		W/	WITH

PLANTING NOTES

1. ANY DISCREPANCIES W/ THE DWG'S AND/OR SPEC'S & SITE CONDITIONS SHALL BE BROUGHT TO THE ATTENTION OF ENG PRIOR TO PROCEEDING W/ CONSTRUCTION.
2. THE CONTRACTOR IS RESPONSIBLE FOR LOCATING UTILITIES PRIOR TO BEGINNING CONSTRUCTION
3. PLANT MATERIAL LOCATIONS SHALL BE COORDINATED W/ SPRINKLER IRRIGATION HEAD LOCATIONS TO AVOID ANY CONFLICTS.
4. PLANT GROUPINGS TO BE ARRANGED PER SAMPLE PLANTING ARRANGEMENT (4/43)
5. PLANTING DRAWING IS BASED UPON BASE DRAWINGS DATED 08/22/2012. PREPARED BY:

   SEATTLE PUBLIC UTILITIES/ENGINEERING DIVISION
   700 5TH AVE, SUITE 4900/ PO BOX 34018
   SEATTLE, WA 98124–4018
   (206)–684–5186

6. TREES MUST BE PLANTED TO THE FOLLOWING STANDARDS:
   A. 3 1/2 FEET BACK FROM THE FACE OF THE CURB.
   B. 5 FEET FROM UNDERGROUND UTILITY LINES
   C. 10 FEET FROM POWER POLES (15 FEET RECOMMENDED)
   D. 7 1/2 FEET FROM DRIVEWAYS (10 FEET RECOMMENDED)
   E. 20 FEET FROM STREET LIGHTS OR OTHER EXISTING TREES.
   F. 30 FEET FROM STREET INTERSECTIONS.

NO.	DATE	MARK	REVISIONS	MADE	CHK'D	REV'D
			NATURE			

VAULT SERIAL NO. 35668

P:\Project\C311054–Lower Mapes Creek Restoration\04–Design\A–Plot_Files\HBB\41 C311054–P–VEGE4.dwg
jonesjc Sep–06–12 3:13pm

60% COMPLETE SIP
(NOT FOR CONSTRUCTION)

HBB
LANDSCAPE ARCHITECTURE
215 WESTLAKE AVENUE NORTH 206.682.3051 phone
SEATTLE, WA 98109 206.682.3245 fax

APPROVED FOR ADVERTISING
NANCY LOCKE
DEPARTMENT OF FINANCE & ADMINISTRATIVE SERVICES
SEATTLE, WASHINGTON 20

BY:
PURCHASING & CONTRACTING SERVICES DIRECTOR

NAME OR INITIALS AND DATE	INITIALS AND DATE
DESIGNED	REVIEWED:
CHECKED	DES. CONST.
	SDOT PROJ. MGR.
DRAWN	RECEIVED
CHECKED	REVISED AS BUILT

ALL WORK SHALL BE DONE IN ACCORDANCE WITH THE CITY OF SEATTLE STANDARD PLANS AND SPECIFICATIONS AND OTHER DOCUMENTS CALLED FOR IN SECTION 0–02.3 OF THE PROJECT MANUAL.

STATE OF WASHINGTON
LICENSED
LANDSCAPE ARCHITECT

JULIET B. VONG
LICENSED NO. 857
EXPIRES ON _____

Seattle Public Utilities
City of Seattle
Ray Hoffman, Director

ORDINANCE NO. APPROVED
FUND:
SCALE: H. 1"=20', V. 1"=10' INSPECTOR'S BOOK

PLANTING SCHEDULE, ABBREVIATIONS, NOTES & LEGEND

52ND AVE S CSO REDUCTION & LOWER MAPES CREEK RESTORATION

JOB NO. PC C311054 R/W CO
VAULT PLAN NO. 774–889
SHEET 41 OF 53

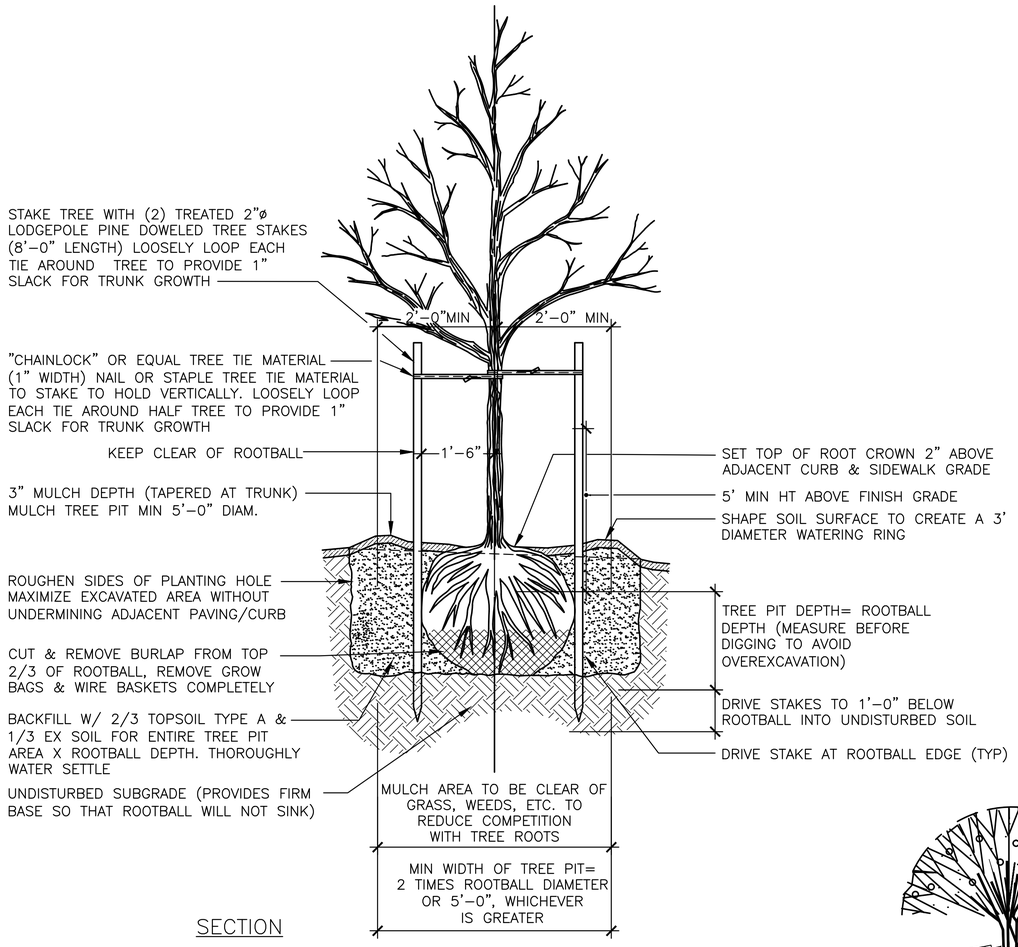

SECTION

DECIDUOUS TREE PLANTING DETAIL 1 / 38,39

SCALE: NTS

NOTES:

1. PLANTING INCLUDES REMOVAL OF STAKES ONE YEAR AFTER INSTALLATION.
2. SHAPE SOIL SURFACE TO PROVIDE 3' DIA WATERING RING.
3. TREE CLEARANCE SHALL BE PER STD PLAN NO 030.
4. ADJUST TREE TIES DURING ESTABLISHMENT TO ALLOW ROOM FOR GROWTH (@1" SLACK).
5. CHAIN LOCK TREE TIE. INSTALL PER MFR'S INSTRUCTIONS. SECURE TO WOOD STAKE W/ #2 PENNY COMMON NAIL (ONE PER STAKE). MAINTAIN 1" CLR BETWEEN THE TREE TRUNK & CHAIN LOCK

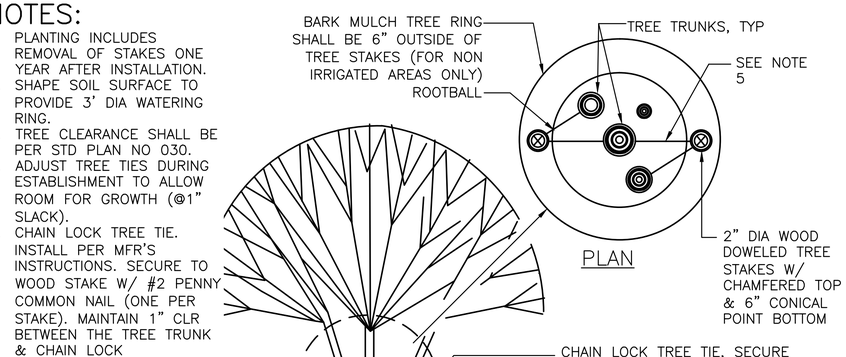

SECTION

MULTI–TRUNK DECIDUOUS TREE PLANTING DETAIL 2 / 38,39

SCALE: NTS

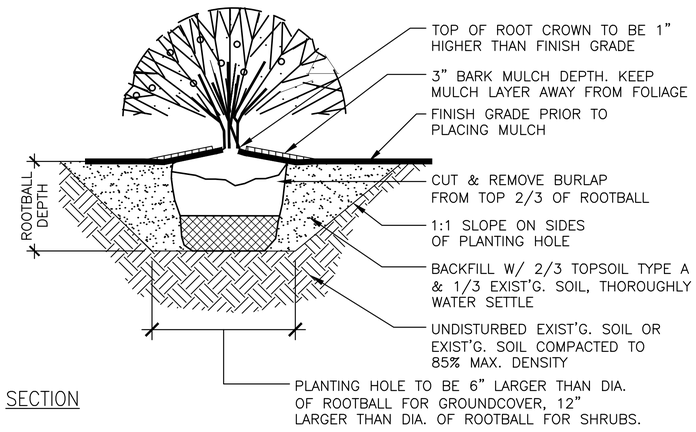

SECTION

SHRUB AND GROUNDCOVER PLANTING DETAIL 3 / 39,40

SCALE: NTS

60% COMPLETE SIP
(NOT FOR CONSTRUCTION)

PLANTING DETAILS (1 OF 2)

NO.	REVISIONS	MADE	CHK'D	REV'D
	NATURE			
	REVISIONS			

VAULT SERIAL NO.	DATE	MARK
35668		

HBB
LANDSCAPE ARCHITECTURE
215 WESTLAKE AVENUE NORTH 206.682.3051 phone
SEATTLE, WA 98109 206.682.3245 fax

APPROVED FOR ADVERTISING
NANCY LOCKE
DEPARTMENT OF FINANCE & ADMINISTRATIVE SERVICES
SEATTLE, WASHINGTON 20
BY:
PURCHASING & CONTRACTING SERVICES DIRECTOR

NAME OR INITIALS AND DATE	INITIALS AND DATE
DESIGNED	REVIEWED:
CHECKED	DES. CONST.
	SDOT PROJ. MGR.
DRAWN	RECEIVED
CHECKED	REVISED AS BUILT

ALL WORK SHALL BE DONE IN ACCORDANCE WITH THE CITY OF SEATTLE STANDARD PLANS AND SPECIFICATIONS AND OTHER DOCUMENTS CALLED FOR IN SECTION 0–02.3 OF THE PROJECT MANUAL.

STATE OF WASHINGTON
LICENSED
LANDSCAPE ARCHITECT
JULIET B. VONG
LICENSED NO. 857
EXPIRES ON

Seattle Public Utilities
City of Seattle
Ray Hoffman, Director
ORDINANCE NO. APPROVED
FUND:
SCALE: H. 1"=20', V. 1"=10' INSPECTOR'S BOOK

52ND AVE S CSO REDUCTION & LOWER MAPES CREEK RESTORATION

JOB NO. PC C311054 R/W CO
VAULT PLAN NO. 774–889
SHEET 42 OF 53

P:\Project\C311054–Lower Mapes Creek Restoration\04–Design\A–Plot_Files\HBB\42 C311054–P–VEGE5.dwg
jonesjc Sep–06–12 3:13pm

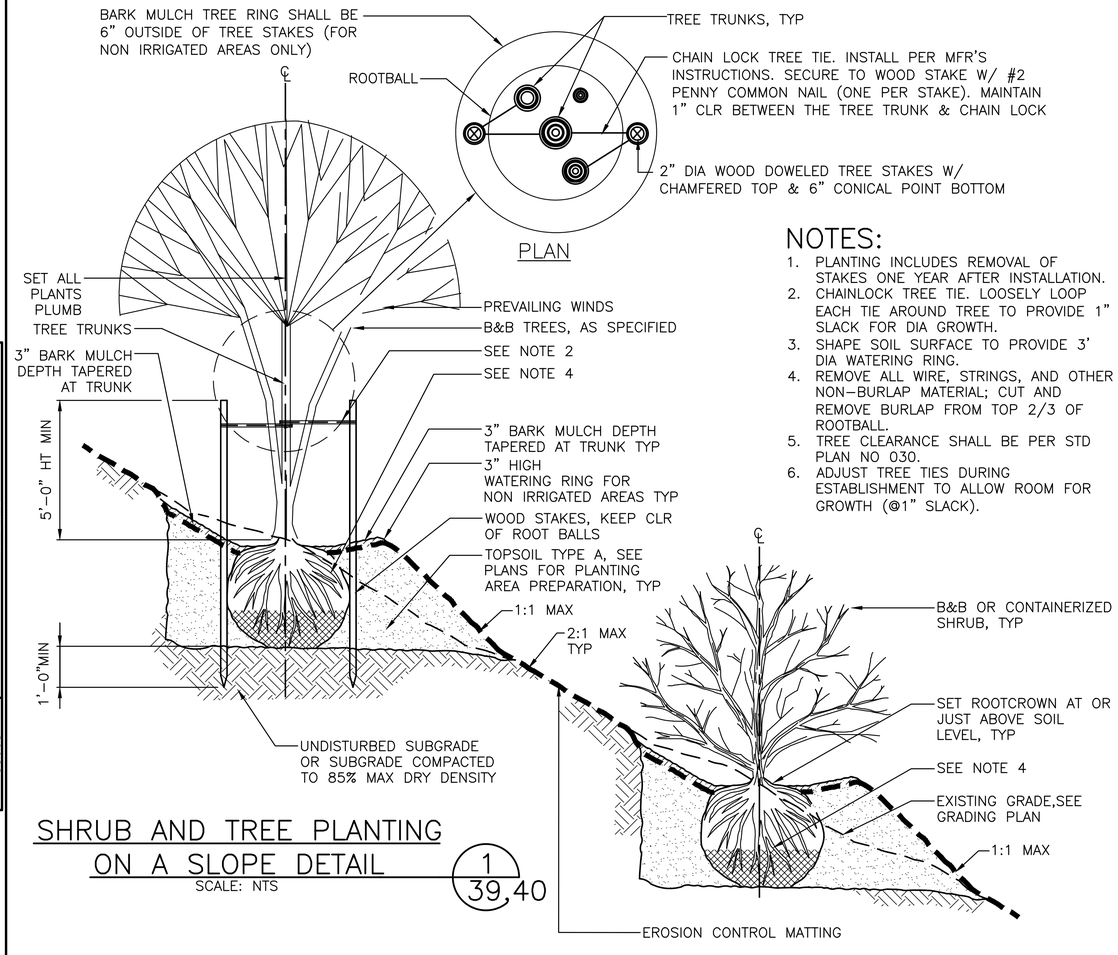

NOTES:

1. PLANTING INCLUDES REMOVAL OF STAKES ONE YEAR AFTER INSTALLATION.
2. CHAINLOCK TREE TIE. LOOSELY LOOP EACH TIE AROUND TREE TO PROVIDE 1" SLACK FOR DIA GROWTH.
3. SHAPE SOIL SURFACE TO PROVIDE 3' DIA WATERING RING.
4. REMOVE ALL WIRE, STRINGS, AND OTHER NON-BURLAP MATERIAL; CUT AND REMOVE BURLAP FROM TOP 2/3 OF ROOTBALL.
5. TREE CLEARANCE SHALL BE PER STD PLAN NO 030.
6. ADJUST TREE TIES DURING ESTABLISHMENT TO ALLOW ROOM FOR GROWTH (@1" SLACK).

SHRUB AND TREE PLANTING ON A SLOPE DETAIL 1 / 39,40
SCALE: NTS

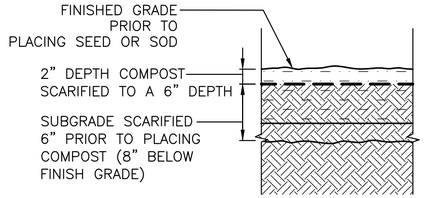

NOTES:

1. SCARIFY SUBGRADE TO A 6" DEPTH PRIOR TO PLACING COMPOST, EXCEPT WHERE SCARIFICATION WOULD DAMAGE EXISTING TREE ROOTS.
2. A MINIMUM OF 2" COMPOST SHALL BE INSTALLED AND SCARIFIED TO A DEPTH OF 6", PER SPEC.
3. INSTALL SEED OR SOD PER SPEC.
4. FOR BARK MULCH ONLY AREAS SEE SPEC'S FOR PREPARATION.

LAWN AREA PREPARATION DETAIL 2 / 38,39,40
SCALE: NTS

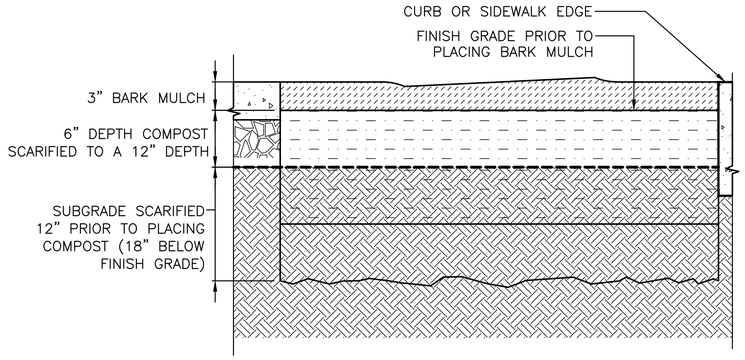

NOTES:

1. SCARIFY SUBGRADE TO A 12" DEPTH PRIOR TO PLACING COMPOST, EXCEPT WHERE SCARIFICATION WOULD DAMAGE EXISTING TREE ROOTS.
2. A MINIMUM OF 6" DEPTH OF COMPOST SHALL BE INSTALLED, PER SPEC. SCARIFY TO A 12" DEPTH.
3. PLANT PLANTS PER DETAILS
4. MULCH AFTER PLANTING, WITH 3 INCHES OF BARK MULCH FLUSH WITH TOP OF PAVING OR SIDEWALK EDGE.
5. FOR BARK MULCH ONLY AREAS SEE SPEC'S FOR SOIL PREPARATION.

PLANTING AREA PREPARATION DETAIL 3 / 39
SCALE: NTS

NOTES:

1. SEE PLANT SCHEDULE FOR OC SPACING AND GROUP SIZES.
2. PATTERN SHOWN REPRESENTS A SAMPLE OF IRREGULAR PLANTING.
3. CONTRACTOR TO PROVIDE A VARIETY OF GROUP SIZES TO ACCOMPLISH AN IRREGULAR PATTERNING OF PLANTS. NO PERFECT SQUARE, LINEAR, OR CIRCULAR SHAPED GROUPINGS ALLOWED. REVIEW PLANT LOCATIONS WITH ENGINEER PRIOR TO PROCEEDING WITH PLANTING.

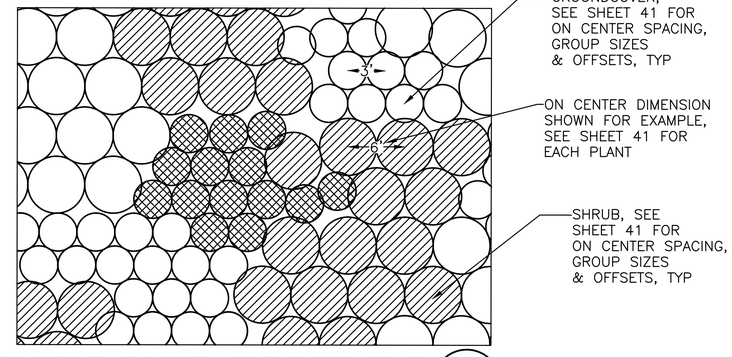

SAMPLE PLANT ARRANGEMENT 4 / 41
SCALE: NTS

60% COMPLETE SIP
(NOT FOR CONSTRUCTION)

PLANTING DETAILS (2 OF 2)

VAULT SERIAL NO. 35668	DATE	MARK	NATURE REVISIONS	MADE	CHK'D	REV'D

HBB
LANDSCAPE ARCHITECTURE
215 WESTLAKE AVENUE NORTH 206.682.3051 phone
SEATTLE, WA 98109 206.682.3245 fax

APPROVED FOR ADVERTISING
NANCY LOCKE
DEPARTMENT OF FINANCE & ADMINISTRATIVE SERVICES
SEATTLE, WASHINGTON 20
BY:
PURCHASING & CONTRACTING SERVICES DIRECTOR

NAME OR INITIALS AND DATE	INITIALS AND DATE
DESIGNED	REVIEWED:
CHECKED	DES. CONST.
	SDOT PROJ. MGR.
DRAWN	RECEIVED
CHECKED	REVISED AS BUILT

ALL WORK SHALL BE DONE IN ACCORDANCE WITH THE CITY OF SEATTLE STANDARD PLANS AND SPECIFICATIONS AND OTHER DOCUMENTS CALLED FOR IN SECTION 0-02.3 OF THE PROJECT MANUAL.

STATE OF WASHINGTON
LICENSED
LANDSCAPE ARCHITECT
JULIET B. VONG
LICENSED NO. 857
EXPIRES ON

Seattle Public Utilities
City of Seattle
Ray Hoffman, Director
ORDINANCE NO. APPROVED
FUND:
SCALE: H. 1"=20', V. 1"=10' INSPECTOR'S BOOK

52ND AVE S CSO REDUCTION & LOWER MAPES CREEK RESTORATION

JOB NO. PC C311054 R/W CO
VAULT PLAN NO. 774-889
SHEET 43 OF 53

P:\Project\C311054-Lower Mapes Creek Restoration\04-Design\A-Plot_Files\HBB\43 C311054-P-VEGE6.dwg
jonesjs Sep-06-12 3:13pm

MATCHLINE STA 37+90 – SEE BELOW

S HENDERSON ST

1. RESTORE EXISTING IRRIGATION SYSTEM TO PRE–EXISTING CONDITIONS, CONTRACTOR TO PROVIDE SHOP DRAWING TO BE REVIEWED AND APPROVED BY ENGINEER PRIOR TO CONSTRUCTION, TYP.
2. IRRIGATION SYSTEM SHALL PROVIDE COMPLETE HEAD–TO–HEAD COVERAGE OF ALL PLANTING AREAS DISTURBED, TYP.
3. CUT & CAP EXISTING IRRIGATION SYSTEM DURING CONSTRUCTION TO ALLOW FOR THE CONTINUED USED OF THE ENTIRE SYSTEM, TYP.

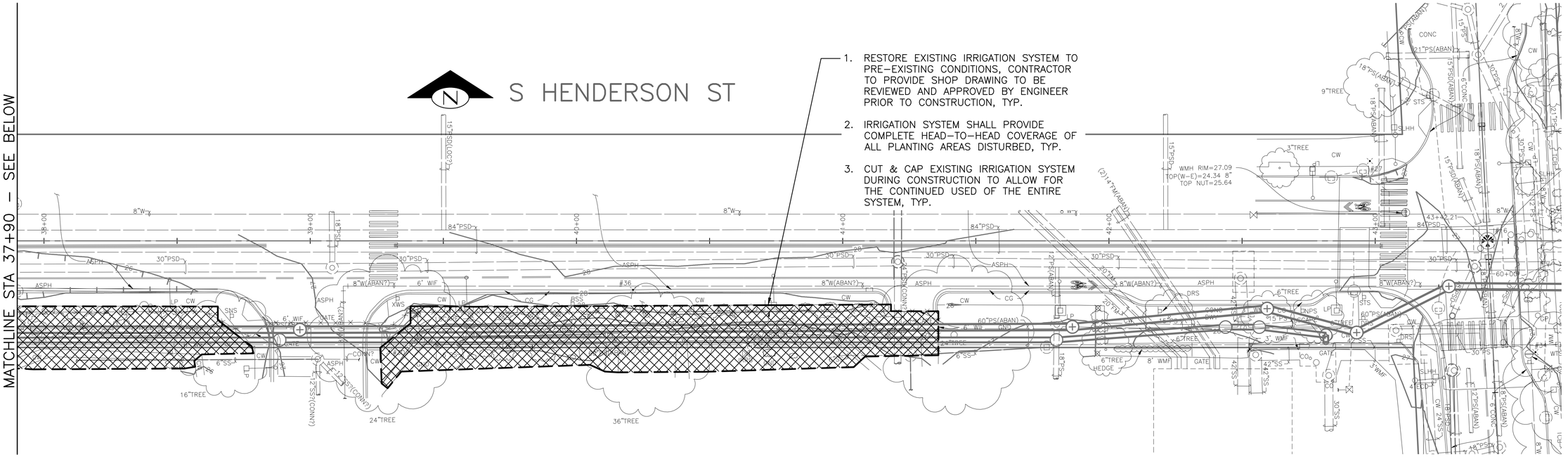

MATCHLINE STA 37+90 – SEE ABOVE

S HENDERSON ST

52ND AVE S

RIGHT–OF–WAY, TYP

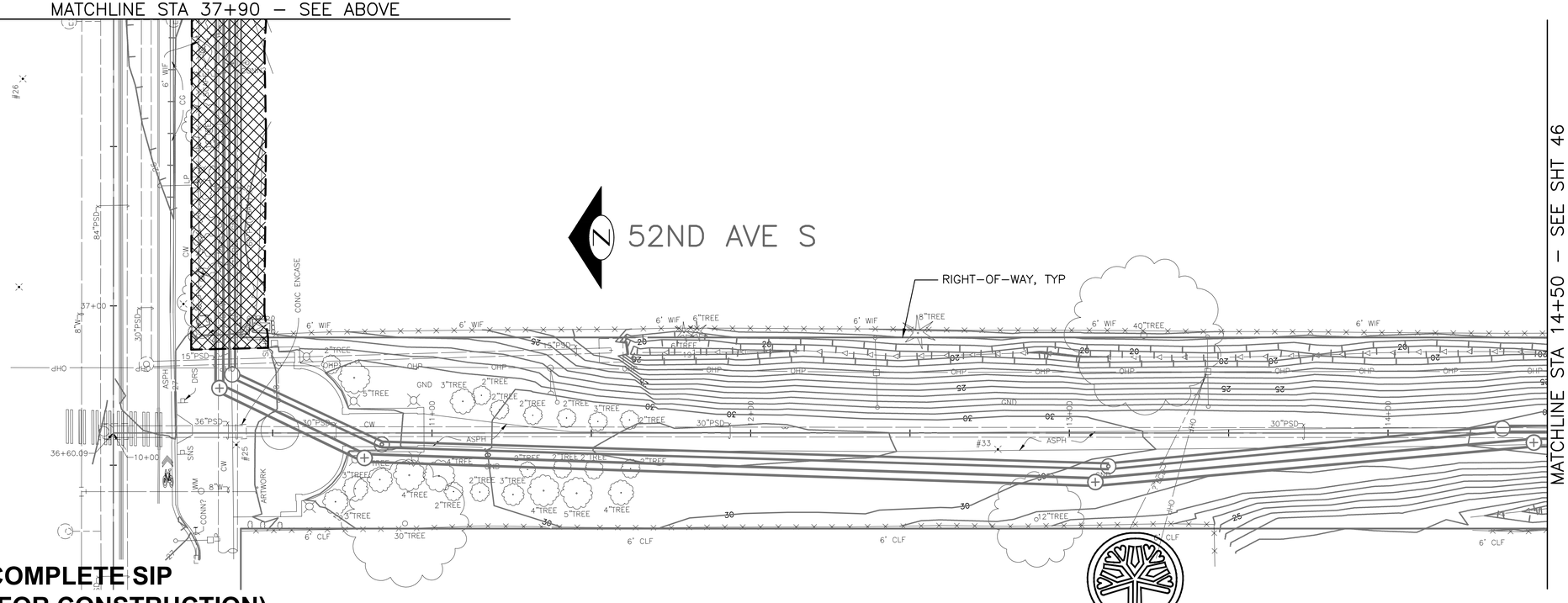

MATCHLINE STA 14+50 – SEE SHT 46

20 10 0 20 40

SCALE IN FEET

60% COMPLETE SIP
(NOT FOR CONSTRUCTION)

IRRIGATION PLAN (1 OF 2)

VAULT SERIAL NO.	DATE	MARK	NATURE REVISIONS	MADE	CHK'D	REV'D
35668						

P:\Project\C311054–Lower Mapes Creek Restoration\04–Design\A–Plot_Files\HBB\44 C311054–P–IRRG1.dwg
jonesjc Sep–06–12 3:13pm

HBB
LANDSCAPE ARCHITECTURE
215 WESTLAKE AVENUE NORTH 206.682.3051 phone
SEATTLE, WA 98109 206.682.3245 fax

APPROVED FOR ADVERTISING
NANCY LOCKE
DEPARTMENT OF FINANCE & ADMINISTRATIVE SERVICES
SEATTLE, WASHINGTON 20
BY:
PURCHASING & CONTRACTING SERVICES DIRECTOR

NAME OR INITIALS AND DATE	INITIALS AND DATE
DESIGNED	REVIEWED:
CHECKED	DES. CONST.
DRAWN	SDOT PROJ. MGR.
CHECKED	RECEIVED
	REVISED AS BUILT

ALL WORK SHALL BE DONE IN ACCORDANCE WITH THE CITY OF SEATTLE STANDARD PLANS AND SPECIFICATIONS AND OTHER DOCUMENTS CALLED FOR IN SECTION 0–02.3 OF THE PROJECT MANUAL.

STATE OF WASHINGTON
LICENSED
LANDSCAPE ARCHITECT
JULIET B. VONG
LICENSED NO. 857
EXPIRES ON

Seattle Public Utilities
City of Seattle
Ray Hoffman, Director
ORDINANCE NO. APPROVED
FUND:
SCALE: H. 1"=20', V. 1"=10' INSPECTOR'S BOOK

52ND AVE S CSO REDUCTION & LOWER MAPES CREEK RESTORATION

JOB NO. PC C311054 R/W CO
VAULT PLAN NO. 774–889
SHEET 44 OF 53

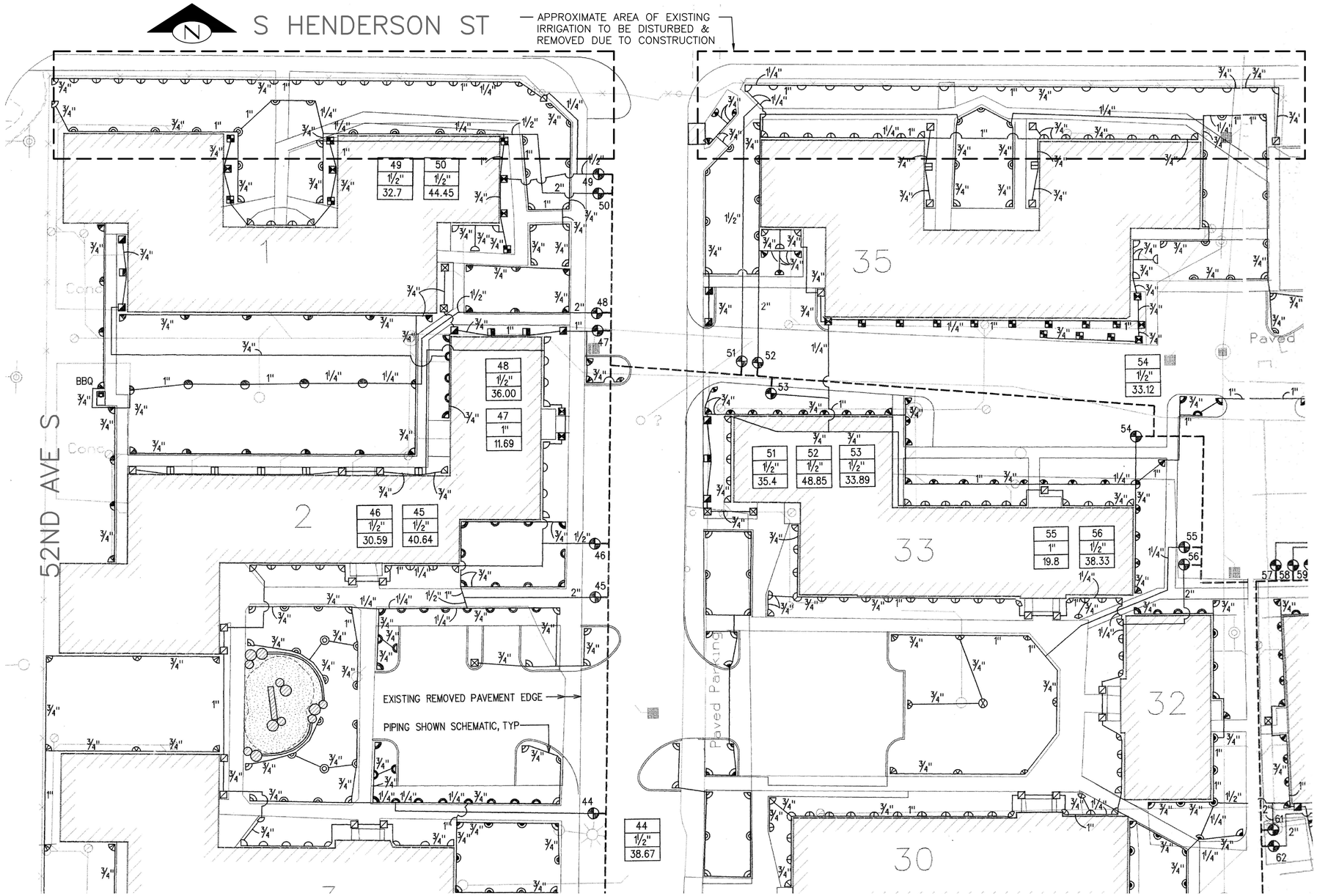

IRRIGATION SCHEDULE

SYMBOL	NAME	COMMENTS
	RAIN BIRD T-30	4" PLASTIC POP-UP IRRIGATION HEAD RADIUS: 31'F, 29'H, 28'Q @ 25 PSI GPM: 4.2F, 2.2H, 1.2Q
	RAIN BIRD T-22	4" PLASTIC POP-UP IRRIGATION HEAD RADIUS: 21' @ 25 PSI GPM: 4.2F, 2.2H, 1.2Q
	RAIN BIRD 1812- 15 SERIES	12" PLASTIC POP-UP IRRIGATION HEAD RADIUS: 15' @ 30 PSI GPM: 3.7F, 1.85H, .93Q
	RAIN BIRD 1804- 15 SERIES	4" PLASTIC POP-UP IRRIGATION HEAD RADIUS: 15' @ 30 PSI GPM: 3.7F, 1.85H, .93Q
	RAIN BIRD 1812- 12 SERIES	12" PLASTIC POP-UP IRRIGATION HEAD RADIUS: 12' @ 30 PSI GPM: 2.6F, 1.3H, .65Q
	RAIN BIRD 1804- 12 SERIES	4" PLASTIC POP-UP IRRIGATION HEAD RADIUS: 12' @ 30 PSI GPM: 2.6F, 1.3H, .65Q
	RAIN BIRD 1812- 10 SERIES	12" PLASTIC POP-UP IRRIGATION HEAD RADIUS: 10' @ 30 PSI GPM: 1.57F, .79H, .39Q
	RAIN BIRD 1804- 10 SERIES	4" PLASTIC POP-UP IRRIGATION HEAD RADIUS: 10' @ 30 PSI GPM: 1.57F, .79H, .39Q
	RAIN BIRD 1812- 8 SERIES	12" PLASTIC POP-UP IRRIGATION HEAD RADIUS: 8' @ 30 PSI GPM: 1.57F, .79H, .39Q
	RAIN BIRD 1804- 8 SERIES	4" PLASTIC POP-UP IRRIGATION HEAD RADIUS: 8' @ 30 PSI GPM: 1.57F, .79H, .39Q
EST SST	RAIN BIRD 1812- 15 STRIP SERIES	12" PLASTIC POP-UP IRRIGATION HEAD SST: 4'W x 30'L, GPM:1.21 @ 30 PSI EST: 4'W x 15'L, .61GPM @ 30 PSI
EST SST	RAIN BIRD 1804- 15 STRIP SERIES	4" PLASTIC POP-UP IRRIGATION HEAD SST: 4'W x 30'L, GPM:1.21 @ 30 PSI EST: 4'W x 15'L, GPM:.61 @ 30 PSI
EST SST	RAIN BIRD 1812- B15 STRIP SERIES	12" PLASTIC POP-UP IRRIGATION HEAD W/ BRASS NOZZLE SST: 6'W x 26'L, GPM:1.29 @ 30 PSI EST: 6'W x 13'L, GPM:.65 @ 30 PSI
EST SST	RAIN BIRD 1804- B15 STRIP SERIES	4" PLASTIC POP-UP IRRIGATION HEAD W/ BRASS NOZZLE SST: 6'W x 26'L, GPM:1.29 @ 30 PSI EST: 6'W x 13'L, GPM:.65 @ 30 PSI
	RAIN BIRD AUTOMATIC VALVE MODEL:	RAIN BIRD PLASTIC VALVE SIZED AS NOTED ON DRWG. SEE SPEC.
	RAIN BIRD QUICK COUPLING VALVE	SEE SPECIFICATIONS
C	RAIN BIRD CONTROLLER	SEE SPECIFICATIONS
M	WATER METER	
POC	POINT OF CONNECTION	SEE SPECIFICATIONS **PROVIDE TWO (2) COMPLETE POC ASSEMBLIES.**
	MAIN LINE	2½" SIZE, SEE SPECIFICATIONS
	LATERAL LINE	SIZED ON PLAN, SEE SPECIFICATIONS
	SLEEVING	SEE SPECIFICATIONS
	WATER SUPPLY LINE	
A 1 1½" 29.29	CONTROLLER CIRCUIT NUMBER VALVE SIZE GALLONS PER MINUTE	

40 20 0 40 80
SCALE IN FEET

NOTE:

1. DRAWING FOR REFERENCE ONLY.
2. CONTRACTOR SHALL FIELD VERIFY EXISTING IRRIGATION SYSTEM LAYOUT & CONDITION PRIOR TO CONSTRUCTION.

60% COMPLETE SIP
(NOT FOR CONSTRUCTION)

EXISTING IRRIGATION PLAN

NO.	DATE	MARK	NATURE REVISIONS	MADE	CHK'D	REV'D

VAULT SERIAL NO. 35668

HBB
LANDSCAPE ARCHITECTURE
215 WESTLAKE AVENUE NORTH 206.682.3051 phone
SEATTLE, WA 98109 206.682.3245 fax

APPROVED FOR ADVERTISING
NANCY LOCKE
DEPARTMENT OF FINANCE & ADMINISTRATIVE SERVICES
SEATTLE, WASHINGTON 20
BY:
PURCHASING & CONTRACTING SERVICES DIRECTOR

NAME OR INITIALS AND DATE	INITIALS AND DATE
DESIGNED	REVIEWED:
CHECKED	DES. CONST.
	SDOT PROJ. MGR.
DRAWN	RECEIVED
CHECKED	REVISED AS BUILT

ALL WORK SHALL BE DONE IN ACCORDANCE WITH THE CITY OF SEATTLE STANDARD PLANS AND SPECIFICATIONS AND OTHER DOCUMENTS CALLED FOR IN SECTION 0-02.3 OF THE PROJECT MANUAL.

STATE OF WASHINGTON
LICENSED
LANDSCAPE ARCHITECT
JULIET B. VONG
LICENSED NO. 857
EXPIRES ON _____

Seattle Public Utilities
City of Seattle
Ray Hoffman, Director
ORDINANCE NO. APPROVED
FUND:
SCALE: H. 1"=20', V. 1"=10' INSPECTOR'S BOOK

52ND AVE S CSO REDUCTION & LOWER MAPES CREEK RESTORATION

JOB NO. PC C311054 R/W CO
VAULT PLAN NO. 774-889
SHEET 45 OF 53

P:\Project\C311054-Lower Mapes Creek Restoration\04-Design\A-Plot_Files\HBB\45 C311054-P-IRR02.dwg
jonesjc Sep-06-12 3:13pm

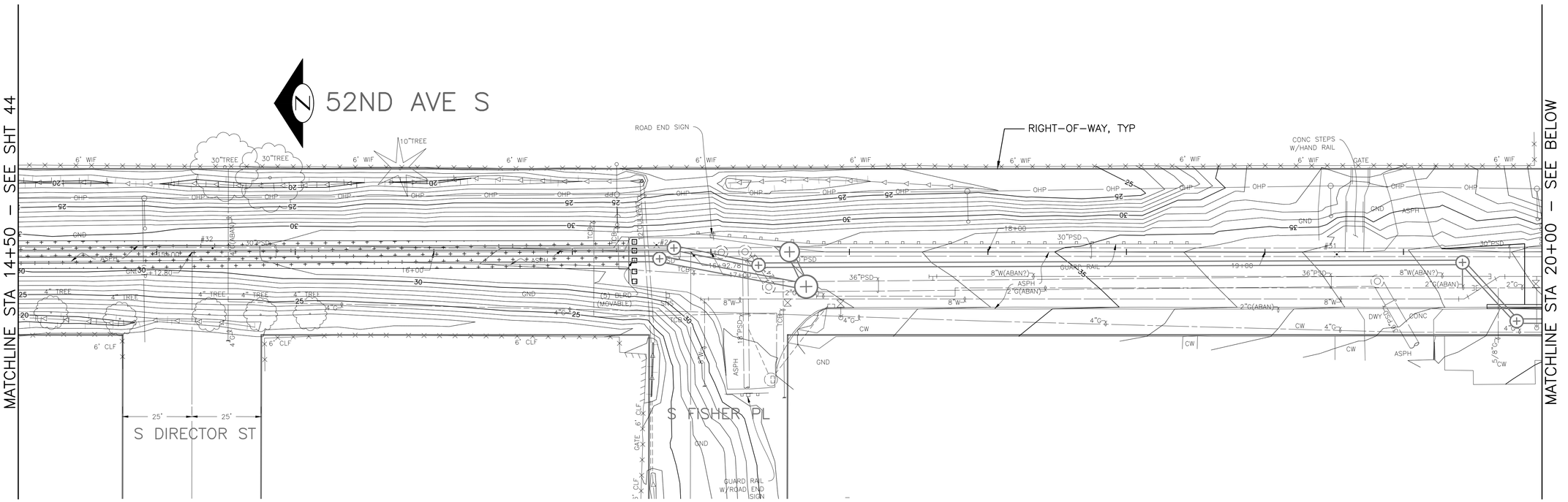

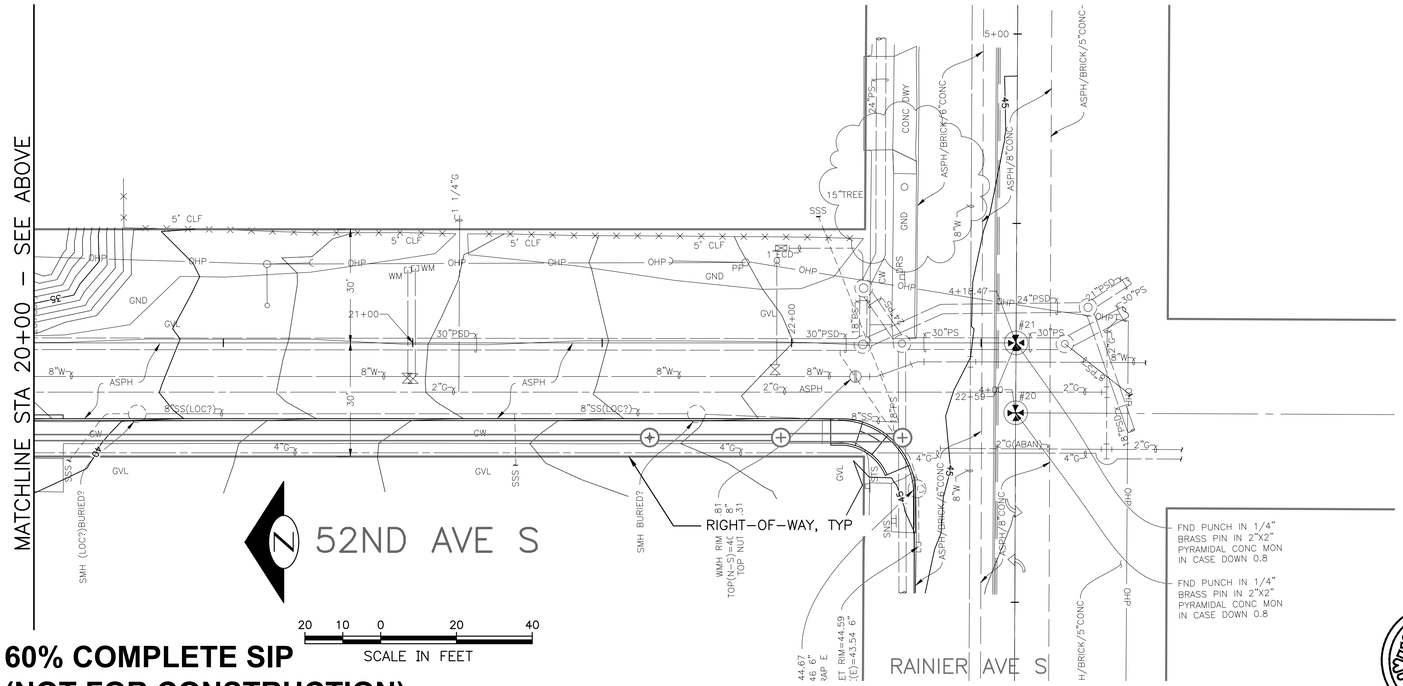

NOTE TO REVIEWER:

NO IRRIGATION ON THIS SHEET

60% COMPLETE SIP
(NOT FOR CONSTRUCTION)

IRRIGATION PLAN (2 OF 2)

VAULT	SERIAL NO.	DATE	MARK	NATURE REVISIONS
	35668			

REV'D	CHK'D	MADE

P:\Project\C311054-Lower Mapes Creek Restoration\04-Design\A-Plot_Files\HBB\46 C311054-P-IRRG3.dwg
jonesjc Sep-06-12 3:13pm

HBB
LANDSCAPE ARCHITECTURE
215 WESTLAKE AVENUE NORTH 206.682.3051 phone
SEATTLE, WA 98109 206.682.3245 fax

APPROVED FOR ADVERTISING
NANCY LOCKE
DEPARTMENT OF FINANCE & ADMINISTRATIVE SERVICES
SEATTLE, WASHINGTON 20
BY:
PURCHASING & CONTRACTING SERVICES DIRECTOR

NAME OR INITIALS AND DATE	INITIALS AND DATE
DESIGNED	REVIEWED:
CHECKED	DES. CONST.
	SDOT PROJ. MGR.
DRAWN	RECEIVED
CHECKED	REVISED AS BUILT

ALL WORK SHALL BE DONE IN ACCORDANCE WITH THE CITY OF SEATTLE STANDARD PLANS AND SPECIFICATIONS AND OTHER DOCUMENTS CALLED FOR IN SECTION 0-02.3 OF THE PROJECT MANUAL.

STATE OF WASHINGTON
LICENSED
LANDSCAPE ARCHITECT
JULIET B. VONG
LICENSED NO. 857
EXPIRES ON

Seattle Public Utilities
City of Seattle
Ray Hoffman, Director
ORDINANCE NO. APPROVED
FUND:
SCALE: H. 1"=20', V. 1"=10' INSPECTOR'S BOOK

52ND AVE S CSO REDUCTION & LOWER MAPES CREEK RESTORATION

JOB NO: PC C311054, R/W, CO
VAULT PLAN NO. 774–889
SHEET 46 OF 53

IRRIGATION LEGEND

APPROXIMATE AREA OF EXISTING IRRIGATION TO BE DISTURBED & RESTORED DUE TO CONSTRUCTION. SEE ADDITIONAL NOTES ON SHEET 44 & 45.

PIPE SIZE LEGEND

AS NOTED ON SHEET 45.

IRRIGATION SCHEDULE

POP-UP SPRAY HEAD DETAIL (2/47)

POP-UP SPRAY HEAD SYMBOLS REFER TO EXISTING SYMBOLS ON SHEET 45.

SYMBOL	DESCRIPTION	RADIUS	PRESSURE	GPM + 10%
	RAINBIRD 1812-SAM-PRS-MPR-10	10'	30	0.43
	RAINBIRD 1812-SAM-PRS-MPR-10	10'	30	0.87
	RAINBIRD 1812-SAM-PRS-MPR-10	10'	30	1.74
	RAINBIRD 1812-SAM-PRS-MPR-12	12'	30	0.72
	RAINBIRD 1812-SAM-PRS-MPR-12	12'	30	1.43
	RAINBIRD 1812-SAM-PRS-MPR-15	15'	30	1.01
	RAINBIRD 1812-SAM-PRS-MPR-15	15'	30	2.04
	RAINBIRD 1812-SAM-PRS-15EST	4'X15'	30	0.67
	RAINBIRD 1812-SAM-PRS-15SST	4'X30'	30	1.33
	RAINBIRD 1812-SAM-PRS-9SST	9'X18'	30	1.90

IRRIGATION NOTES

1. HEAD LOCATION SHALL BE ADJUSTED IN THE FIELD TO COMPLY W/ EXISTING SITE CONDITIONS & PLANT MATERIALS.
2. CONTRACTOR SHALL COORDINATE IRRIGATION EQUIPMENT W/ PLANT MATERIAL, TO AVOID CONFLICTS, SPRAY BLOCKAGE & ANY OTHER ITEMS DEEMED APPROPRIATE BY THE ENG.
3. EXISTING IRRIGATION DRAWING IS SCHEMATIC. ACTUAL LOCATIONS MAY VARY DUE TO PLANT MATERIALS, UTILITIES OR EX CONDITIONS. CONTRACTOR IS RESPONSIBLE FOR LOCATING UTILITIES PRIOR TO BEGINNING CONSTRUCTION.
4. CONTRACTOR SHALL FIELD VERIFY EXISTING IRRIGATION SYSTEM LAYOUT & CONDITION PRIOR TO CONSTRUCTION.
5. CONTRACTOR SHALL FIELD VERIFY EXISTING PSI OF AREAS DISTURBED PRIOR TO CONSTRUCTION TO ENSURE ADEQUATE PSI FOR RESTORED IRRIGATION AREAS.
6. ALL IRRIGATION SLEEVING TO BE STAKED IN THE FIELD & LOCATED ON DIMENSIONED "AS-BUILT" DRAWING TO ALLOW FUTURE LOCATION & USE. SLEEVE LOCATIONS SHOWN ON IRRIGATION DRAWINGS ARE APPROXIMATE.
7. ALL IRRIGATION INSTALLATION IN THE RIGHT-OF-WAY TO BE MAINTAINED BY SOUTHEAST EFFECT DEVELOPMENT (SEED), OPERATION/COVERAGE TO BE TESTED FOR FIELD REVIEW BY SDOT TO AVOID OVERSPRAY INTO THE ROADWAY OR SIDEWALK AREAS.

IRRIGATION ABBREVIATIONS

@	AT
%	PERCENT
&	AND
APPROX	APPROXIMATE
BLDG	BUILDING
CF	CUBIC FOOT
℄	CENTER LINE
CLR	CLEAR
CLS	CLASS
CONC	CONCRETE
CONST	CONSTRUCTION
CU	CUBIC
CY	CUBIC YARD
DIA/Ø	DIAMTER
DWG'S	DRAWINGS
ELEC	ELECTRICAL
ENG	ENGINEER
EXIST'G/EXIST	EXISTING
GA	GAUGE
GPM	GALLONS PER MINUTE
ID	INSIDE DIAMETER
IRR	IRRIGATION
MAX	MAXIMUM
MFR	MANUFACTURER
MIN	MINIMUM
NTS	NOT TO SCALE
NO.	NUMBER
NP	NON-POTABLE
OD	OUTSIDE DIAMETER
POC	POINT OF CONNECTION
PVC	POLYVINYLCHLORIDE
PSI, PSI	POUNDS PER SQUARE INCH
REQ'D	REQUIRED
RPBA	REDUCED PRESSURE BACK-FLOW ASSEMBLY
SCHED/SCH	SCHEDULE
SPECS	SPECIFICATIONS
STD	STANDARD
SQ	SQUARE
TYP	TYPICAL
W/	WITH
YD	YARDS

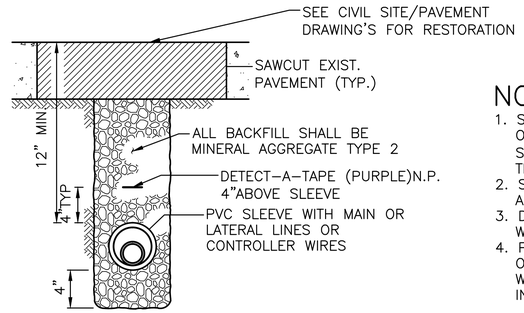

SLEEVE TRENCHING

NOTES:

1. SLEEVE SIZE AS SHOWN ON DRAWINGS OR ID OF SLEEVE TO BE 1" GREATER THAN OD OF PIPE
2. SLEEVES REQUIRED UNDER ALL PAVED AREAS
3. DO NOT TAPE BUNDLED WIRES TO MAIN LINE
4. PROVIDE TEMPORARY CAP OR PLUG FOR SLEEVES WHEN PIPE LAYING IS NOT IN PROGRESS.

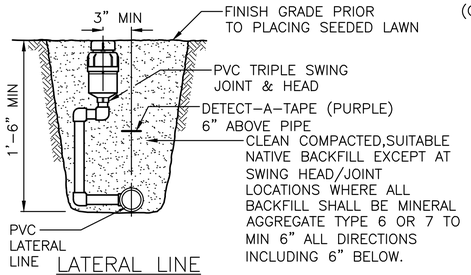

LATERAL LINE

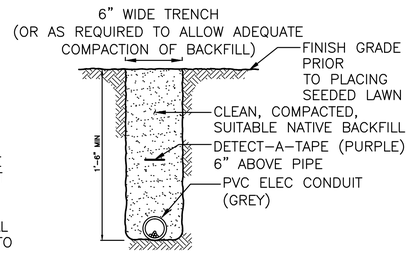

POWER SUPPLY TRENCH

IRRIGATION TRENCHING DETAILS (1/45)

SCALE: NTS

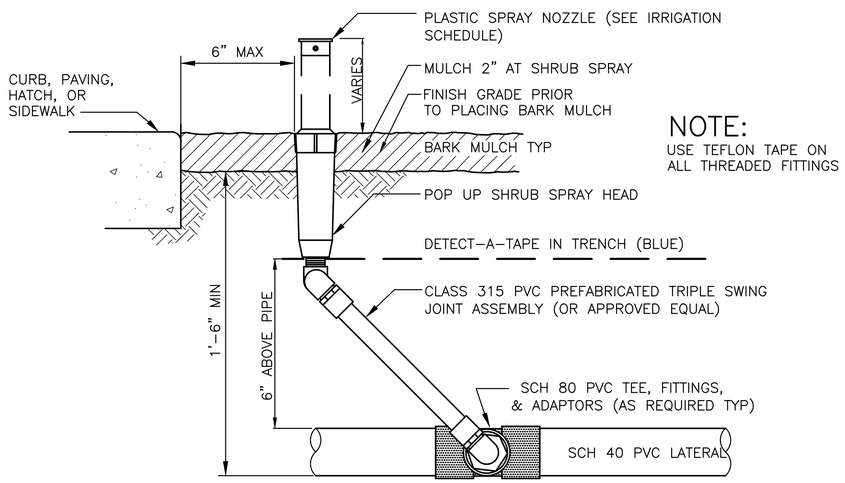

NOTE:
USE TEFLON TAPE ON ALL THREADED FITTINGS

POP UP SPRAY HEAD DETAIL (2/45)

SCALE: NTS

60% COMPLETE SIP
(NOT FOR CONSTRUCTION)

HBB
LANDSCAPE ARCHITECTURE
215 WESTLAKE AVENUE NORTH 206.682.3051 phone
SEATTLE, WA 98109 206.682.3245 fax

APPROVED FOR ADVERTISING
NANCY LOCKE
DEPARTMENT OF FINANCE & ADMINISTRATIVE SERVICES
SEATTLE, WASHINGTON 20

BY:
PURCHASING & CONTRACTING SERVICES DIRECTOR

NAME OR INITIALS AND DATE	INITIALS AND DATE
DESIGNED	REVIEWED:
CHECKED	DES. CONST.
	SDOT PROJ. MGR.
DRAWN	RECEIVED
CHECKED	REVISED AS BUILT

ALL WORK SHALL BE DONE IN ACCORDANCE WITH THE CITY OF SEATTLE STANDARD PLANS AND SPECIFICATIONS AND OTHER DOCUMENTS CALLED FOR IN SECTION 0-02.3 OF THE PROJECT MANUAL.

STATE OF WASHINGTON
LICENSED
LANDSCAPE ARCHITECT
JULIET B. VONG
LICENSED NO. 857
EXPIRES ON _____

Seattle Public Utilities
City of Seattle
Ray Hoffman, Director
ORDINANCE NO. APPROVED
FUND:
SCALE: H. 1"=20', V. 1"=10' INSPECTOR'S BOOK

IRRIGATION LEGEND, SCHEDULE, NOTES, ABBREVIATIONS & DETAILS

52ND AVE S CSO REDUCTION & LOWER MAPES CREEK RESTORATION

JOB NO. PC C311054 R/W CO
VAULT PLAN NO. 774-889
SHEET 47 OF 53

VAULT SERIAL NO. 35668
DATE | MARK | NATURE REVISIONS | MADE | CHK'D | REV'D

P:\Project\C311054-Lower Mapes Creek Restoration\04-Design\A-Plot_Files\HBB\47 C311054-P-IRRG4.dwg
jonesjc Sep-06-12 3:13pm

ELECTRICAL LEGEND

SYMBOL	DESCRIPTION
(X)	CONDUIT AND CONDUCTOR CALLOUT PER CONDUIT AND CABLE SCHEDULE
▲	CONNECTION POINT TO EQUIPMENT SPECIFIED. FURNISHED AND INSTALLED UNDER OTHER DIVISIONS. RACEWAY CONDUCTOR AND CONNECTION IN THIS SECTION.
SPD	SURGE PROTECTIVE DEVICE
MCC–A	MAJOR ELECTRICAL COMPONENT OR DEVICE – NAME OR IDENTIFYING SYMBOL AS SHOWN.
	BRANCH CIRCUIT PANEL BOARD
UH1	UNIT HEATER
TTC	TELEPHONE TERMINAL CABINET
TJB	TERMINAL JUNCTION BOX
5 M	MOTOR, SQUIRREL CAGE INDUCTION, HORSEPOWER INDICATED
	WIRE PIGTAIL
(X) Y	LUMINAIRE, SEE SCHEDULE
z X Y, 4 X Y	WALL MOUNTED LUMINAIRE, SEE SCHEDULE
X Y	EMERGENCY LIGHT FIXTURE
X Y	EXIT LIGHTS, SEE SCHEDULE X – INDICATES FIXTURE TYPE PER LIGHTING FIXTURE SCHEDULE Y – INDICATES CIRCUIT NUMBER FROM PANELBOARD z – INDICATES CONTROLLING SWITCH
	HOME RUN
	EXPOSED CONDUIT
	EMBEDDED OR CONCEALED CONDUIT; INTERLOCK
	BURIED CONDUIT
	REINFORCED CONCRETE–ENCASED CONDUITS
	CONCRETE–ENCLOSED GROUND WIRE

NOTE:
ALL POWER AND AC CONTROL CONDUITS AND CABLES SHALL INCLUDE A GROUND WIRE. PROVIDE GROUND WIRE IN DC CIRCUITS WHERE REQUIRED.

	CONDUIT DOWN
	CONDUIT UP
	CONDUIT, STUBBED AND CAPPED AS SHOWN
[X###]	RACEWAY – CONDUCTOR TAG X= P– POWER 0–600V S– SIGNAL DC CONTROL C– SIGNAL AC CONTROL U– UTILITY T– TELEPHONE TV– CABLE TV D– DATA HIGHWAY F– FIRE ALARM
S^{A}_{3}	WALL SWITCH. SWITCH DESIGNATORS: 2– DOUBLE POLE, A, B, C – ASSOCIATED FIXTURE 3– THREE WAY, P– PILOT LIGHT 4– FOUR WAY, K– KEY OPERATED WP– WEATHERPROOF, D– DIMMER S– SAFETY (20A), CRE– CORROSION RESISTANT MC–MOMENTARY CONTACT
S_M	MANUAL MOTOR STARTER SWITCH

NOTE:

THIS IS A STANDARD LEGEND SHEET. SOME SYMBOLS OR ABBREVIATIONS MAY APPEAR ON THIS SHEET AND NOT ON THE PLANS. SOME SYMBOLS & ABBREVIATIONS APPEAR ON THE PLANS MAY BE AS WELL FOUND IN I&C LEGENDS SHEET.

SYMBOL	DESCRIPTION
Y	CONVENIENCE RECEPTACLE – DUPLEX UNLESS SPECIFIED OTHERWISE , 120V, 20A. Y INDICATES CIRCUIT NUMBER FROM PANELBOARD
	CONVENIENCE RECEPTACLE, PEDESTAL, DUPLEX SINGLE FACE UNLESS INDICATED OTHERWISE WP–WEATHERPROOF C– CLOCK HANGER TL– TWIST LOCK CRE–CORROSION RESISTANT
30	RECEPTACLE – 208V, 1 PH, AMPERAGE INDICATED (250V, NEMA 6–*R) * = AMPERAGE
30	RECEPTACLE, SPECIAL PURPOSE: AMPS INDICATED
	TELEPHONE RECEPTACLE (OUTLET BOX ONLY) WALL MOUNTED
C	COMPUTER NETWORK CONNECTION BOX
J OR HH	GENERAL CONTROL OR WIRING DEVICE. LETTER SYMBOLS OR ABBREVIATIONS INDICATE TYPE OF DEVICE.
CS	PUSH–BUTTON STATION. FOR TYPE PUSH BUTTON REQUIRED, SEE CONTROL DIAGRAMS.
30	NONFUSED DISCONNECT SWITCH, SIZE INDICATED. 3 POLE UNLESS INDICATED OTHERWISE.
60/40 F	FUSED DISCONNECT SWITCH, SIZE INDICATED (60/40, 60 = SWITCH RATING: 40 = FUSE RATING). 3 POLE UNLESS INDICATED OTHERWISE.
VFD	VARIABLE FREQUENCY DRIVE. SEE CONTROL DIAGRAM.
2	COMBINATION (FUSE OR CIRCUIT BREAKER AS INDICATED) MAGNETIC STARTER, NEMA SIZE INDICATED, SEE CONTROL DIAGRAM.
F	FIRE ALARM STATION, MANUAL
F	FIRE ALARM BELL AND STROBE
FI	AIR DUCT SMOKE DETECTOR IONIZATION
S	SMOKE DETECTOR
K	MECHANICAL INTERLOCK (KIRK–KEY TYPE)
	WARNING BELL
	GROUNDING ROD
M	METER; KWH OR KWHD AS INDICATED
(3)	CURRENT TRANSFORMER, NUMBER INDICATED
G	CONNECTION POINT GROUND
N	NEUTRAL
	2 POSITION SWITCH
A	INDICATING LIGHT, PUSH–TO–TEST, LETTER INDICATES COLOR
A	INDICATING LIGHT – LETTER INDICATES COLOR A AMBER G GREEN B BLUE R RED C CLEAR W WHITE

SYMBOL	DESCRIPTION
	CONTACT – NORMALLY OPEN
	CONTACT – NORMALLY CLOSED
	OVERLOAD RELAY HEATER
1	MAGNETIC STARTER WITH NEMA SIZE INDICATED
100/M	CIRCUIT BREAKER, MAGNETIC TRIP ONLY, FRAME SIZE SHOWN, 3 POLE UNLESS INDICATED OTHERWISE.
400	CIRCUIT BREAKER, THERMAL MAGNETIC TRIP SHOWN, 3 POLE UNLESS INDICATED OTHERWISE.
E	ELECTRICALLY OPERATED CIRCUIT BREAKER
100	SWITCH – CURRENT RATING INDICATED, 3 POLE UNLESS INDICATED OTHERWISE.
225	FUSE – RATING INDICATED
XXXX AT XXXX AF	DRAWOUT CIRCUIT BREAKER, LOW VOLTAGE
	SURGE ARRESTER
	GROUND
120V OR 120/240V 15 KVA 1 PH	TRANSFORMER, SECONDARY VOLTAGES, PHASE AND RATING INDICATED AS APPLICABLE
GFR 25A 0.1	PICK–UP SETTING TIME / CURRENT CHARACTERISTIC } GROUND FAULT RELAY WITH CT
	} PUSH–BUTTON SWITCH, MOMENTARY CONTACT, NORMALLY OPEN
	} PUSH–BUTTON SWITCH, MOMENTARY CONTACT, NORMALLY CLOSED
OFF ON AUTO XOO OOX OOX	SELECTOR SWITCH – MAINTAINED CONTACT – (–––) IDENTIFIES OPERATION: X – CLOSED CONTACT O – OPEN CONTACT
	THERMAL SWITCH
X	M = MAGNETIC CONTACTOR C = CONTROL RELAY TD = TIME DELAY RELAY
TD	TIME DELAY CONTACT NORMALLY CLOSED
TDR TC OR TDR TO	} TIME DELAY RELAY CONTACT (TIME ACTION INDICATED)
	NORMALLY CLOSED LEVEL SWITCH, OPEN ON RISING LEVEL
	NORMALLY OPEN LEVEL SWITCH, CLOSE ON RISING LEVEL
	HEAT TRACE

ABBREVIATIONS

ABBREV	DESCRIPTION
A	AMMETER, AMPERE, AMBER
AC	ALTERNATING CURRENT
AF	AMPERE FRAME
AFF	ABOVE FINISHED FLOOR
AFG	ABOVE FINAL GRADE
AT	AMPERE TRIP
ATS	AUTOMATIC TRANSFER SWITCH
AUX	AUXILIARY
BC	BARE COPPER
C	CONDUIT,CONTACTOR,CONDULET
CB	CIRCUIT BREAKER
CC	CONTROL CABLE
CKT	CIRCUIT
CL	CLOSE
CP	CONTROL PANEL
CPT	CONTROL POWER TRANSFORMER
CR	CONTROL RELAY
CS	CONTROL STATION
CT	CURRENT TRANSFORMER
DC	DIRECT CURRENT
DIV	DIVISION
E	EMPTY, ECLECTRIC CONDUIT
ECB	ELECTRICAL CABLE
ECD	ELECTRICAL CONDUIT
ECP	ENVIRONMENTAL CONTROL PANEL
EF	EXHAUST FAN
EL	ELEVATION
ETM	ELAPSED TIME METER
EXST,EX	EXISTING
EP	EXPLOSION PROOF
F, FU	FUSE
FAP	FIRE ALARM PANEL
FE	FLOW ELEMENT
FLUOR	FLUORESCENT
FVNR	FULL VOLTAGE NON–REVERSING
FVR	FULL VOLTAGE REVERSING
FV	FLOW VALVE
G	GREEN, GROUND
GFI	GROUND FAULT INTERRUPTER
GND	GROUND
HH	HANDHOLE
HID	HIGH INTENSITY DISCHARGE
HPS	HIGH PRESSURE SODIUM
HS	HAND SWITCH
HVAC	HEATING, VENTILATING & AIR CONDITIONING
I & C	INSTRUMENTATION AND CONTROL
INST	INSTANTANEOUS
J,JB	JUNCTION BOX
KWH	KILOWATT HOUR
KWHD	KILOWATT HOUR DEMAND
L	LIGHTING CONTACTOR, LOW SPEED
LB	CONDULET BEND
LCP	LOCAL CONTROL PANEL
LOS	LOCKOUT STOP PUSH BUTTON
LS	LEVEL SWITCH
MTS	MANUAL TRANSFER SWITCH
RTC	REAL TIME CONTROL
CTL	CENTURY LINK (QWEST)
SCL	SEATTLE CITY LIGHT
COMM	COMMUNICATION
PP	POWER POLE
CSO	COMBINED SEWER OVERFLOW

ABBREV	DESCRIPTION
M	MAGNETIC CONTACTOR COIL, MAGNETIC TRIP
MCCB	MOLDED CASE CIRCUIT BREAKER
MCC	MOTOR CONTROL CENTER
MD	MOTORIZED DAMPER
MH	MAINTENANCE HOLE
MFR	MANUFACTURER
MS	MOTOR STARTER
MSC	MFR SUPPLIED CABLE
N	NEUTRAL
NC	NORMALLY CLOSED
NO	NORMALLY OPEN
OL	OVERLOAD RELAY
PB	PULL BOX
PC	PHOTOCELL
PDP	POWER DISTRIBUTION PANEL
PDM	POWER DATA MONITOR
PH	PHASE
PNL	PANEL
PP	PUMP PANEL
PS	PRESSURE SWITCH
PSC	PUMP STARTS COUNTER
PT	POTENTIAL TRANSFORMER
PVC	POLYVINYL CHLORIDE CONDUIT
PVC–RGS	PVC COATED RIGID GALVANIZED STEEL CONDUIT
R	RED
REC	RECEPTACLE
GRS	GALVANNIZED RIGID STEEL CONDUIT
RT	REMOTE TELEMETRY
RTU	REMOTE TRANSMISSION UNIT
RVSS	REDUCED VOLTAGE SOLID STATE STARTER
SA	SURGE ARRESTOR
SC	SPEED CONTROL
SD	SMOKE DETECTOR
SS	SOFT START
SST	STAINLESS STEEL
SV	SOLENOID VALVE
SW	SWITCH
SWGR	SWITCHGEAR
T	THERMOSTAT
TC	TIME CLOCK, TIME CLOSE
TCD	TELEMETRY CONDUIT
TD	TEMPERATURE DETECTOR RELAY, TIME DELAY
TDR	TIME DELAY RELAY
TEL	TELEPHONE BACKBOARD
THM	THERMAL SWITCH
TJB	TERMINAL JUNCTION BOX
TO	TIME OPEN
TS	TEMPERATURE SWITCH
TSP	TWISTED SHIELDED PAIR
TST	TWISTED SHIELDED TRIAD
TVSS	TRANSIENT VOLTAGE SURGE SUPPRESSOR
TYP	TYPICAL
UH	UNIT HEATER
UVR	UNDER VOLTAGE RELAY
V	VOLTMETER, VOLT
VFD	VARIABLE FREQUENCY DRIVE
VSC	VENDOR SPECIFIED CABLE
W	WATT
WHD	WATTHOUR DEMAND METER
WP	WEATHERPROOF
XFMR	TRANSFORMER
XP	EXPLOSION–PROOF
RGS	RIGID GALVANIZED STEEL
CU	COPPER
NEU	NEUTRAL
MIN	MINIMUM

	MADE	CHK'D	REV'D

VAULT	SERIAL NO.	DATE	MARK	NATURE REVISIONS
	35668			

60% COMPLETE SIP
(NOT FOR CONSTRUCTION)

P:\Project\C311054–Lower Mapes Creek Restoration\04–Design\A–Plot_Files\Carter\48 C311054–P–ELE–Legend.dwg
jonesjc Sep–06–12 3:13pm

ELECTRICAL LEGENDS, SYMBOLS & ABBREVIATIONS

APPROVED FOR ADVERTISING
NANCY LOCKE
DEPARTMENT OF FINANCE & ADMINISTRATIVE SERVICES
SEATTLE, WASHINGTON 20
BY:
PURCHASING & CONTRACTING SERVICES DIRECTOR

NAME OR INITIALS AND DATE	INITIALS AND DATE
DESIGNED	REVIEWED:
CHECKED	DES. CONST.
	SDOT PROJ. MGR.
DRAWN	RECEIVED
CHECKED	REVISED AS BUILT

ALL WORK SHALL BE DONE IN ACCORDANCE WITH THE CITY OF SEATTLE STANDARD PLANS AND SPECIFICATIONS AND OTHER DOCUMENTS CALLED FOR IN SECTION 0–02.3 OF THE PROJECT MANUAL.

TIMOTHY KLUSU KIM
STATE OF WASHINGTON
38183
REGISTERED
PROFESSIONAL ENGINEER

Seattle Public Utilities
City of Seattle
Ray Hoffman, Director

ORDINANCE NO. APPROVED
FUND: INSPECTOR'S BOOK
SCALE: NONE

52ND AVE S CSO REDUCTION & LOWER MAPES CREEK RESTORATION

JOB NO. PC C311054 R/W CO
VAULT PLAN NO. 774–889
SHEET 48 OF 53

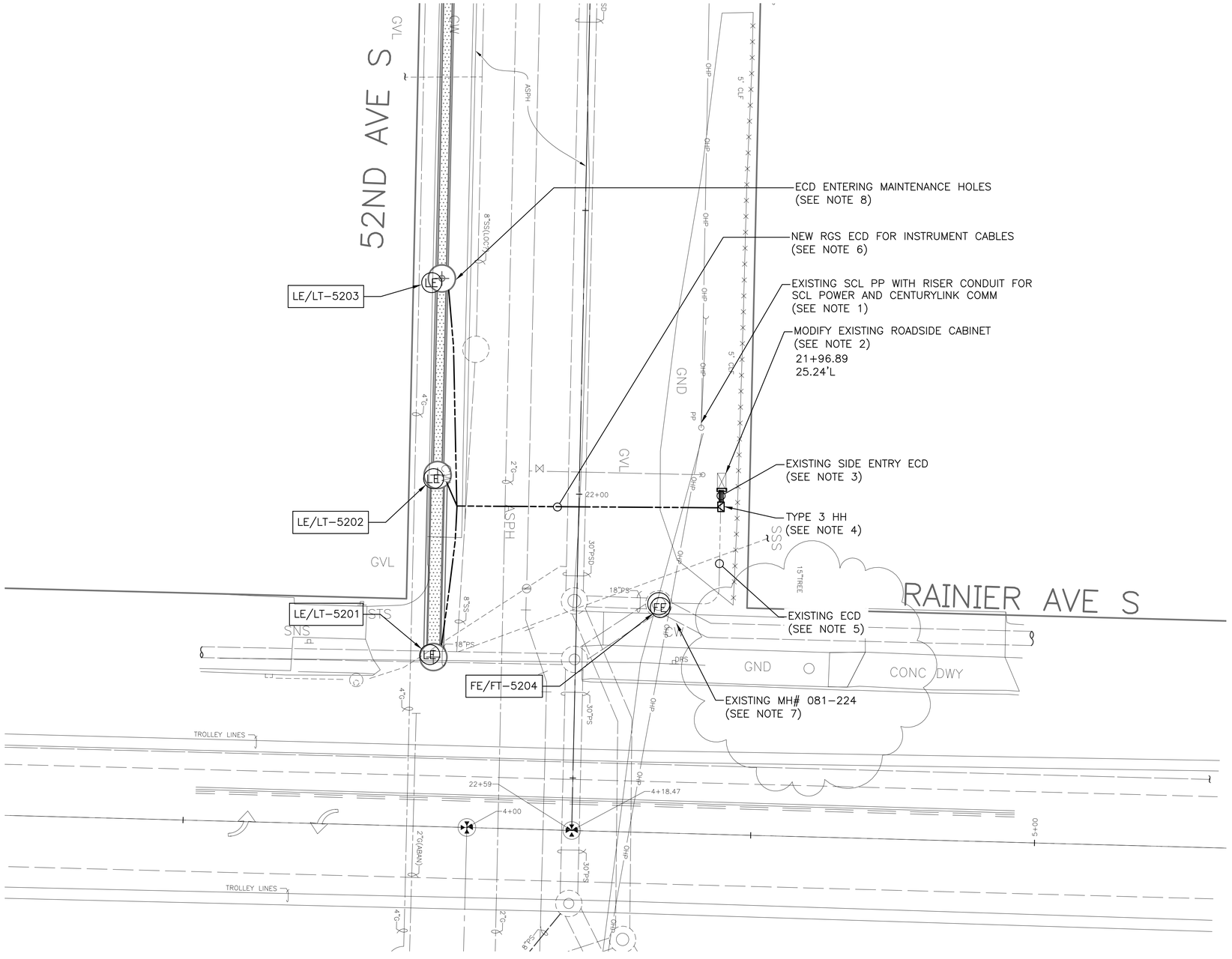

ELECTRICAL SITE PLAN

60% COMPLETE SIP
(NOT FOR CONSTRUCTION)

GENERAL NOTES:

(UNLESS OTHERWISE NOTIFIED)

1. ALL WORK SHALL BE DONE PER CITY OF SEATTLE STANDARD PLAN AND SPECIFICATIONS, 2011 EDITION.
2. UTILITIES SHOWN ON THE PLAN ARE APPROXIMATE. CONTRACTOR SHALL BE RESPONSIBLE TO CONTACT UNDERGROUND UTILITY LOCATE SERVICE AT THE NUMBER 1–800–42–5555 TWO WORKING DAYS PRIOR TO ANY EXCAVATION. NOTIFY OWNER OF ANY CHANGES DUE TO INTERFERENCE AND CONFLICTS.
3. PROVIDE PROTECTION AND MINIMIZE INTERFERENCE WITH POWER POLE AND/OR OTHER UTILITIES FEATURES NEAR BY EXCAVATION AND TRENCHING. SEE SECTION 1–07.15 OF COS STANDARD SPECIFICATION.
4. ANY UNDERGROUND CONDUIT TRENCHING, EXCAVATION, OR DISTURBED LAWN AND PLANTING SHALL BE RESTORED PER PROJECT LANDSCAPING DESIGN SPECIFICATION AND/OR TO THE ORIGINAL CONDITION.
5. NO UNDERGROUND CABLE SPLICES SHALL BE ALLOWED.
6. PROVIDE AND INSTALL ALL CONDUITS AND WIRES AS SHOWN ON THE DESIGN PLAN. ALL CONDUITS SHALL BE MARKED WITH PERMANENT NAME TAGS. PROVIDE SEAL CAPS AND PULL STRINGS TO SPARE CONDUITS WHERE TERMINATED IN THE HANDHOLES AND MAINTENANCE HOLES.

NOTES:

1. EXISTING RISER CONDUIT FOR CENTURYLINK COMMUNICATION AND SCL POWER. RE–PULL NEW SERVICE CABLES TO ROADSIDE CABINET AS REQUIRED. VERIFY THE EXISTING GROUND ROD INTEGRITY AND GROUND RGS CONDUIT RISERS TO EXISTING POLE GROUND. IF UNAVAILABLE, INSTALL NEW GROUND ROD IN COMPLIANCE TO 2011 NEC.
2. MODIFY THE EXISTING ROADSIDE CABINET TO ACCOMMODATE THE NEW ECD ENTRY FROM THE SIDE OF CABINET AS SHOWN ON THE PLAN. REARRANGE INTERIOR COMPONENTS AS REQUIRED TO PROVIDE ROOM FOR NEW SCADA PANEL, FLOW MONITOR, AND DESICCANT MODULES. SEE CABINET DETAILS 3 ON SHEET 50.
3. MODIFY AND UPSIZE THE EXISTING SIDE ENTRY CONDUITS TO ACCOMMODATE 4–#2"RGS ECD SIDE ENTRY LEADING TO HH. INSTALL BUSHING GROUNDING TO THE CONDUITS, CABINET AND GROUND ROD.
4. INSTALL TYPE 3 HH WITH 24"HEIGHT MINIMUM PER COS STANDARD PLAN NO 550a. INTERCEPT AND TERMINATE THE EXISTING CONDUITS LEADING TO MH#081–224 IN THE HH.
5. PROTECT THE EXISTING CONDUITS AND RE–PULL INSTRUMENT CABLES AS REQUIRED TO OPERATE THE FLOW MONITOR.
6. NUMBER AND SIZE OF CONDUITS PER SITE PLAN. SEE CONDUIT TRENCHING DETAIL 1 ON SHEET 50 FOR ALL UNDERGROUND CONDUITS.
7. RELOCATE THE EXISTING FLOW MONITOR TO THE ROADSIDE CABINET. CONTRACTOR SHALL COORDINATE WITH PROJECT OWNER FOR MORE DETAILS AND INSTRUCTIONS OF THE INSTALLATION.
8. CONDUITS ENTERING MAINTENANCE HOLES SHALL BE AWAY FROM ENTRANCE LADDER. CORE DRILL HOLES SHALL BE AT LEAST 1/2 INCH LARGER THAN CONDUIT SIZE.

NATURE REVISIONS	MADE	CHK'D	REV'D

VAULT SERIAL NO.	DATE	MARK
35668		

APPROVED FOR ADVERTISING
NANCY LOCKE
DEPARTMENT OF FINANCE & ADMINISTRATIVE SERVICES
SEATTLE, WASHINGTON 20
BY:
PURCHASING & CONTRACTING SERVICES DIRECTOR

NAME OR INITIALS AND DATE	INITIALS AND DATE
DESIGNED	REVIEWED:
CHECKED	DES. CONST.
	SDOT PROJ. MGR.
DRAWN	RECEIVED
CHECKED	REVISED AS BUILT

ALL WORK SHALL BE DONE IN ACCORDANCE WITH THE CITY OF SEATTLE STANDARD PLANS AND SPECIFICATIONS AND OTHER DOCUMENTS CALLED FOR IN SECTION 0–02.3 OF THE PROJECT MANUAL.

TIMOTHY KILSUK KIM — STATE OF WASHINGTON — 38183 — REGISTERED PROFESSIONAL ENGINEER

Seattle Public Utilities

City of Seattle
Ray Hoffman, Director

ORDINANCE NO.
FUND:
SCALE: 1"=10'
APPROVED
INSPECTOR'S BOOK

ELECTRICAL SITE PLAN

52ND AVE S CSO REDUCTION & LOWER MAPES CREEK RESTORATION

JOB NO.: PC C311054; R/W; CO
VAULT PLAN NO. 774–889
SHEET 49 OF 53

P:\Project\C311054–Lower Mapes Creek Restoration\04–Design\A–Plot_Files\Carter\49 C311054–P–ELE–Plan–01.dwg
jonesjc Sep–06–12 3:13pm

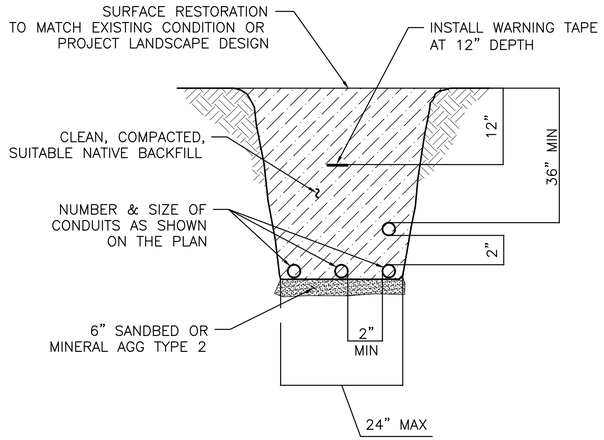

TYPICAL CONDUIT TRENCHING DETAIL 1/—

NTS

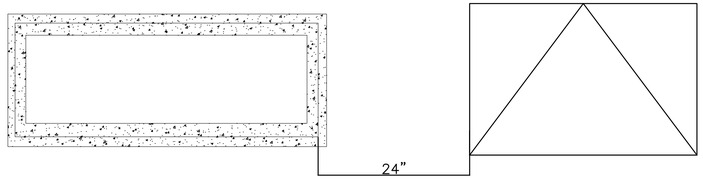

EX CABINET BASE

PLAN VIEW HH

NOTES:
(UNLESS OTHERWISE NOTED)

1. SCL POWER AT THE SITE SHALL BE UN-METER SERVICE. IF A METER REQUIRED, INSTALL THE METER AT THE LOCATION AS SHOWN.
2. CONTRACTOR SHALL BE RESPONSIBLE TO VERITY ELECTRICAL GROUND ROD AND CABINET GROUNDING INTEGRITY PER 2011 NEC. INSTALL A 3/4"x10' CU GROUND ROD AND GROUNDING BONDING TO THE EXISTING CABINET IF THERE IS UNAVAILABLE SECOND GROUND ROD.

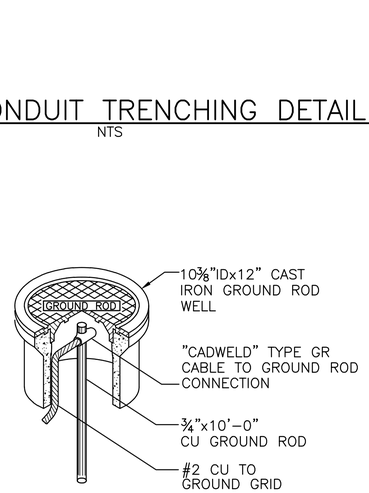

GROUND ROD DETAIL 2/—

NTS

SECTION C-C

NTS

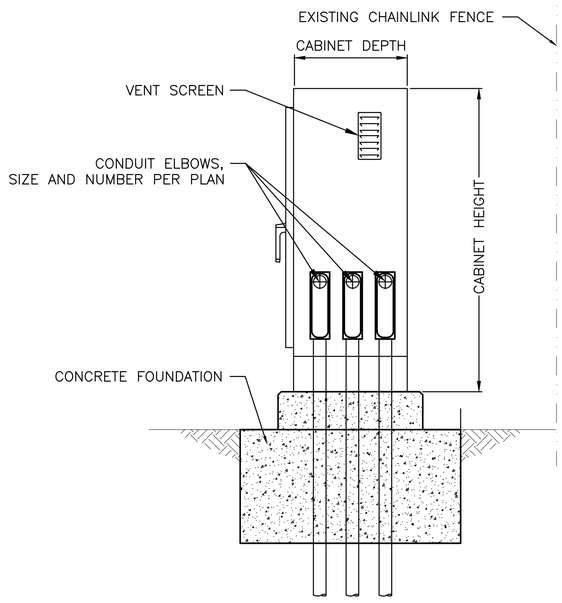

SIDE VIEW

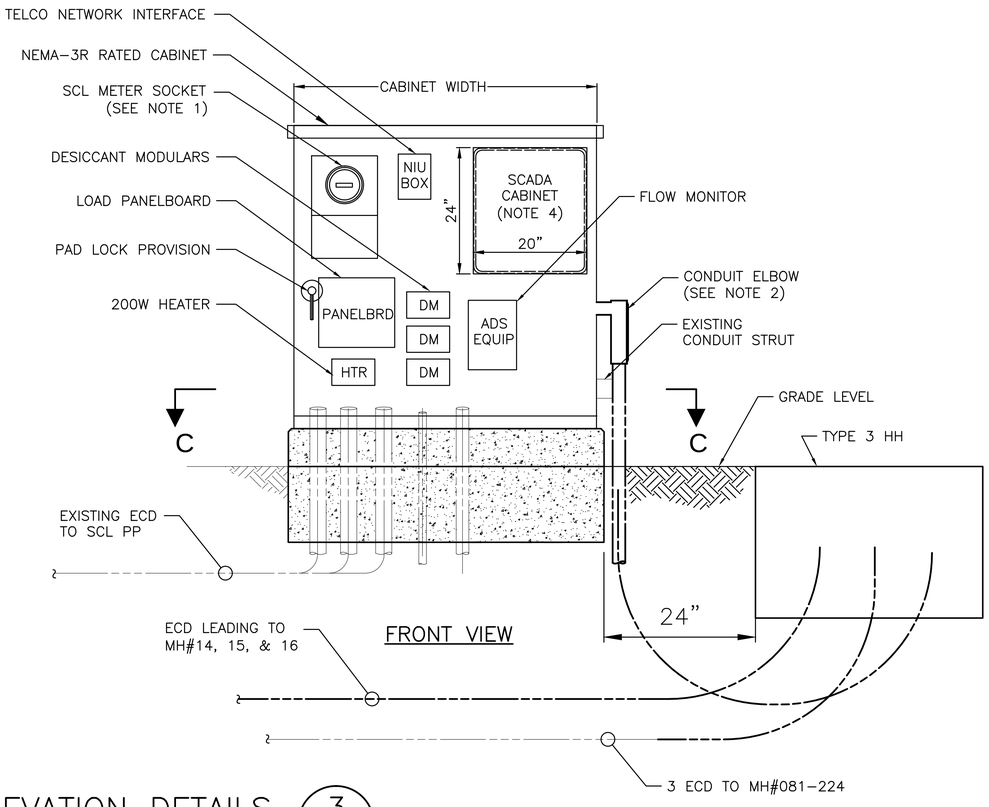

FRONT VIEW

ROADSIDE CABINET ELEVATION DETAILS 3/49,52

NTS

60% COMPLETE SIP
(NOT FOR CONSTRUCTION)

ELECTRICAL STANDARD & ROADSIDE CABINET ELEVATION DETAILS

APPROVED FOR ADVERTISING
NANCY LOCKE
DEPARTMENT OF FINANCE & ADMINISTRATIVE SERVICES
SEATTLE, WASHINGTON 20

BY:
PURCHASING & CONTRACTING SERVICES DIRECTOR

NAME OR INITIALS AND DATE	INITIALS AND DATE
DESIGNED	REVIEWED:
CHECKED	DES. CONST.
	SDOT PROJ. MGR.
DRAWN	RECEIVED
CHECKED	REVISED AS BUILT

ALL WORK SHALL BE DONE IN ACCORDANCE WITH THE CITY OF SEATTLE STANDARD PLANS AND SPECIFICATIONS AND OTHER DOCUMENTS CALLED FOR IN SECTION 0-02.3 OF THE PROJECT MANUAL.

TIMOTHY KILSUK KIM — STATE OF WASHINGTON — 38183 — REGISTERED PROFESSIONAL ENGINEER

Seattle Public Utilities

City of Seattle
Ray Hoffman, Director

ORDINANCE NO. APPROVED
FUND:
SCALE: AS NOTED INSPECTOR'S BOOK

52ND AVE S CSO REDUCTION & LOWER MAPES CREEK RESTORATION

JOB NO. PC C311054 R/W CO
VAULT PLAN NO. 774-889
SHEET 50 OF 53

NO.	DATE	MARK	REVISIONS	MADE	CHK'D	REV'D
VAULT SERIAL NO. 35668			NATURE			

P:\Project\C311054-Lower Mapes Creek Restoration\04-Design\A-Plot_Files\Carter\50 C311054-P-ELE-Details.dwg
jonesjc Sep-06-12 3:14pm

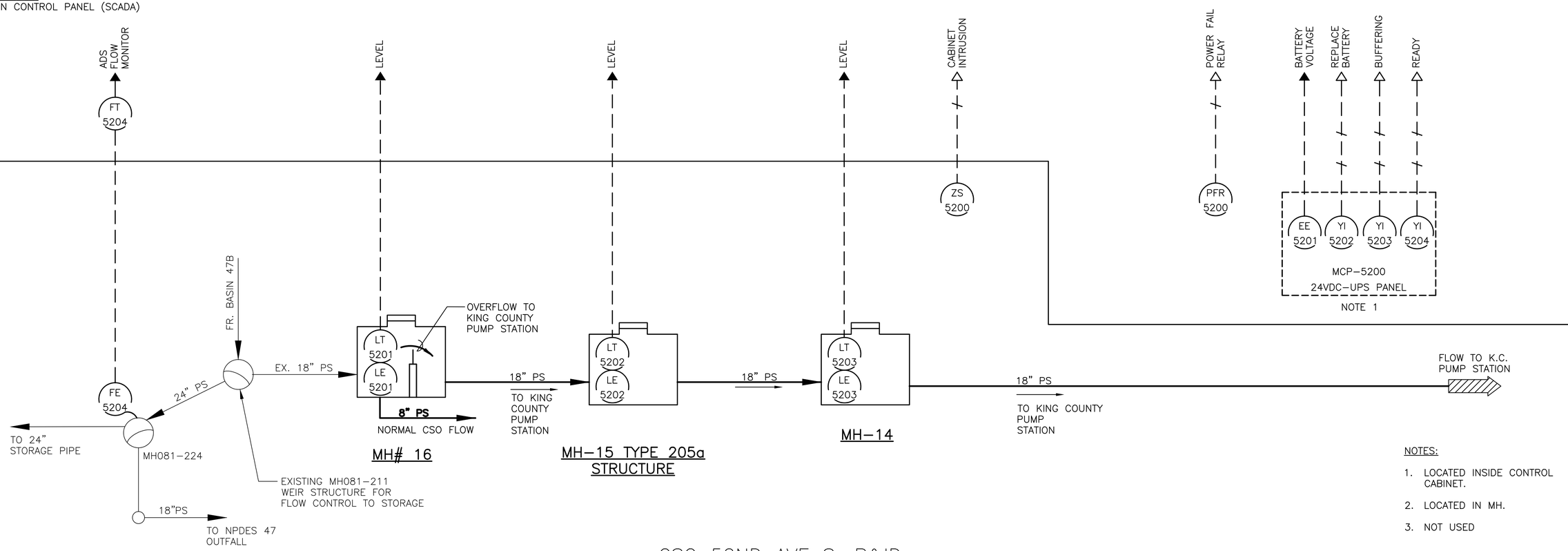

NOTES:

1. LOCATED INSIDE CONTROL CABINET.
2. LOCATED IN MH.
3. NOT USED

CSO 52ND AVE S. P&ID

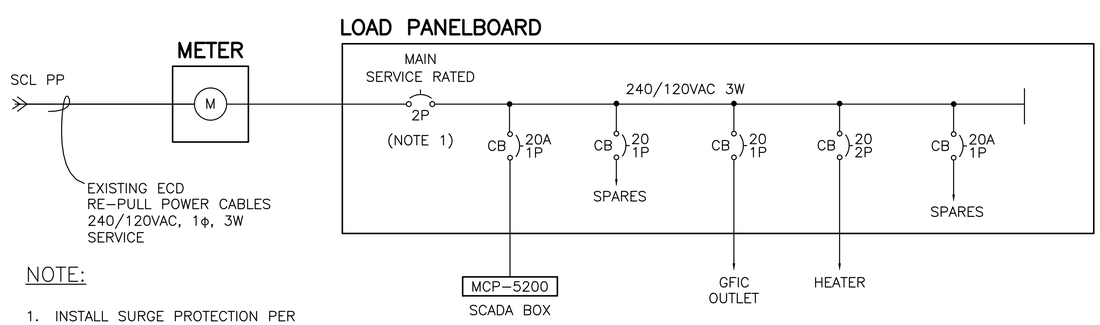

NOTE:

1. INSTALL SURGE PROTECTION PER MANUFACTURE'S RECOMMENDATION & NEC. THE PANEL SHALL HAS 8 CIRCUITS MIN AND SQUARE D OR EQUAL APPROVED.

ONE–LINE DIAGRAM

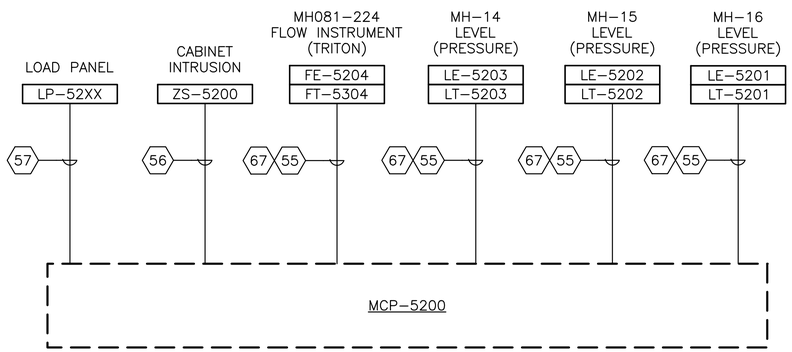

CSO 52ND AVE S. CONTROL PANEL CONDUIT AND WIRING BLOCK DIAGRAM

KEYNOTES:

55 1½" RGS ECD WITH VENDOR SUPPLIED CABLE

67 SPARE 1½" RGS ECD WITH PULL STRING

56 ½" FLEX ECD WITH 3#14AWG CONDUCTORS

57 ½" FLEX ECD WITH 3#12AWG CONDUCTORS

60% COMPLETE SIP
(NOT FOR CONSTRUCTION)

CSO 52ND AVE SOUTH
P&ID, CONTROL PANEL BLOCK & ONE–LINE DIAGRAM

APPROVED FOR ADVERTISING
NANCY LOCKE
DEPARTMENT OF FINANCE & ADMINISTRATIVE SERVICES
SEATTLE, WASHINGTON 20
BY:
PURCHASING & CONTRACTING SERVICES DIRECTOR

NAME OR INITIALS AND DATE
DESIGNED
CHECKED
DRAWN
CHECKED

INITIALS AND DATE
REVIEWED:
DES. CONST.
SDOT PROJ. MGR.
RECEIVED
REVISED AS BUILT

ALL WORK SHALL BE DONE IN ACCORDANCE WITH THE CITY OF SEATTLE STANDARD PLANS AND SPECIFICATIONS AND OTHER DOCUMENTS CALLED FOR IN SECTION 0–02.3 OF THE PROJECT MANUAL.

TIMOTHY KILSU KIM — STATE OF WASHINGTON — 38183 — REGISTERED PROFESSIONAL ENGINEER

Seattle Public Utilities
City of Seattle
Ray Hoffman, Director
ORDINANCE NO.
FUND:
SCALE: NONE
APPROVED
INSPECTOR'S BOOK

52ND AVE S CSO REDUCTION & LOWER MAPES CREEK RESTORATION

JOB NO. PC C311054 R/W CO
VAULT PLAN NO. 774–889
SHEET 51 OF 53

NATURE OF REVISIONS | MADE | CHK'D | REV'D
DATE | MARK
VAULT SERIAL NO. 35668

P:\Project\C311054–Lower Mapes Creek Restoration\04–Design\A–Plot_Files\Corten\51 C311054–P–ELE–Diagram.dwg
jonesjc Sep–06–12 3:14pm

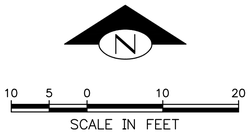

NOTES:

1. CONTRACTOR SHALL PROVIDE PROTECTION AND MINIMIZE INTERFERENCE WITH STREET LIGHT POLE AND/OR ANY CALLED OUT PROTECTED FEATURES NEAR TO EXCAVATION AND TRENCHING. SEE SECTION 7-07.15 COS STANDARD SPECIFICATION.
2. ROADSIDE CABINET ONLY SHOWS A CONCEPTUAL LOCATION. CONTRACTOR SHALL BE RESPONSIBLE TO COORDINATE WITH PROJECT OWNER FOR FIELD-VERIFYING CABINET BASE LOCATION. SEE CABINET ELEVATION DETAIL 1 ON SHEET 53.
3. INSTALL TWO 1.5" INCH CONDUITS TO MAINTENANCE HOLE FROM CABINET BASE FOR INSTRUMENT CABLES. SEE CONDUIT TRENCHING DETAIL 3 ON SHEET 50 FOR MORE INFORMATION.
4. CONDUITS ENTERING THE MAINTENANCE HOLE SHALL BE AWAY FROM ENTRANCE LADDER. CORE DRILL HOLES SHALL BE AT LEAST 1/2 INCH LARGER THAN CONDUIT SIZE.

GENERAL NOTES:

(UNLESS OTHERWISE NOTIFIED)

1. ALL WORK SHALL BE DONE PER CITY OF SEATTLE STANDARD PLAN AND SPECIFICATIONS, 2011 EDITION.
2. UTILITIES SHOWN ON THE PLANS ARE APPROXIMATE. CONTRACTOR SHALL BE RESPONSIBLE TO CONTACT UNDERGROUND UTILITY LOCATE SERVICE AT THE NUMBER 1-800-42-5555 TWO WORKING DAYS PRIOR TO ANY EXCAVATION. NOTIFY OWNER OF ANY CHANGES DUE TO INTERFERENCE AND CONFLICTS.
3. ANY UNDERGROUND CONDUIT TRENCHING, EXCAVATION, OR DISTURBED LAWN AND PLANTING SHALL BE RESTORED PER PROJECT LANDSCAPING DESIGN SPECIFICATION AND/OR TO THE ORIGINAL CONDITION.
4. NO UNDERGROUND CABLE SPLICES SHALL BE ALLOWED.
5. PROVIDE AND INSTALL ALL CONDUITS AND WIRES AS SHOWN THE PLAN. PROVIDE SEAL CAP AND PULL STRING TO SPARE CONDUITS WHERE TERMINATED IN MAINTENANCE HOLES.

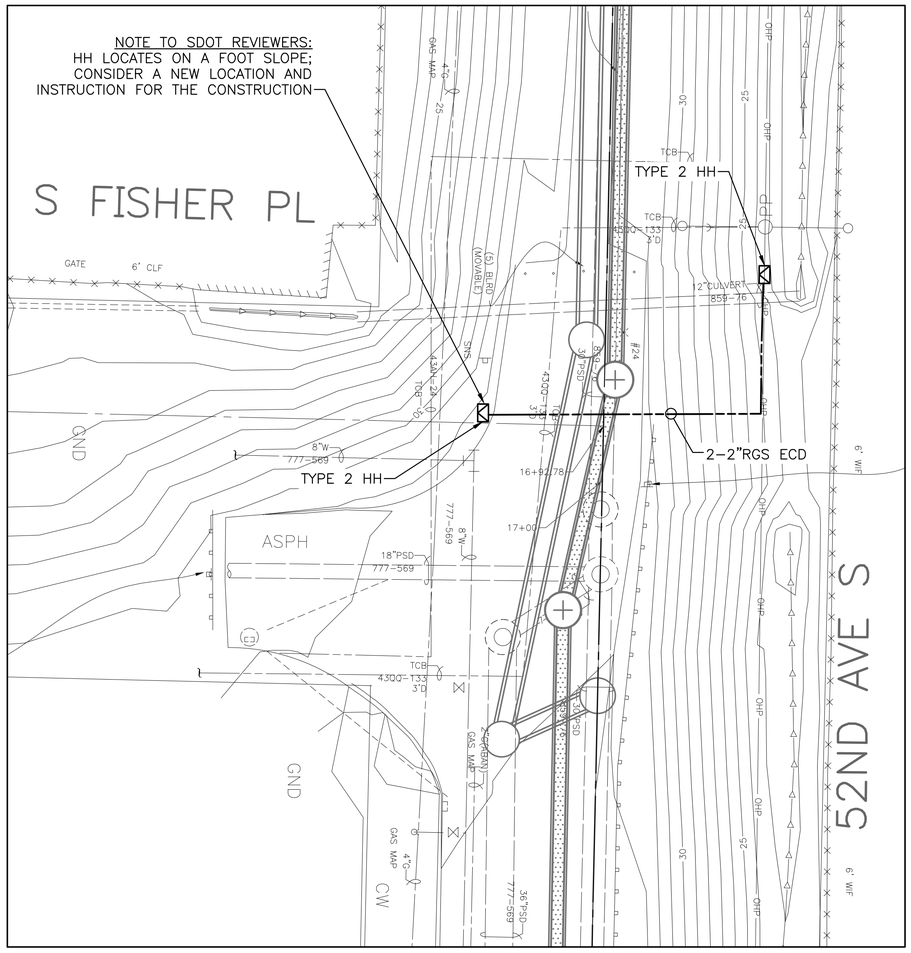

SDOT CONDUIT SITE PLAN

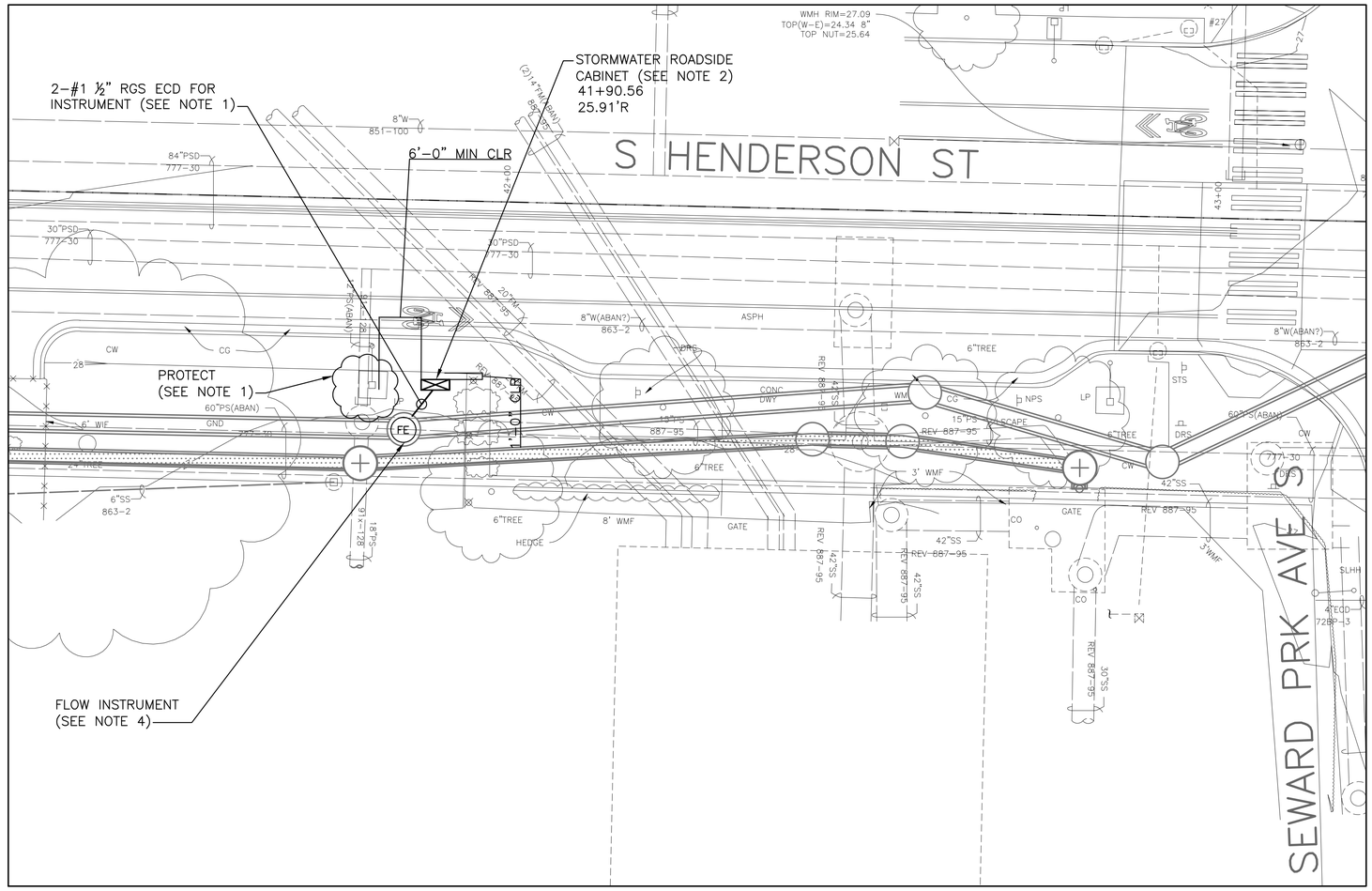

S. HENDERSON ST. ELECTRICAL SITE PLAN

60% COMPLETE SIP
(NOT FOR CONSTRUCTION)

52ND AVE S. AND S. HENDERSON ST.
ELECTRICAL SITE PLAN

NATURE	MADE	CHK'D	REV'D
REVISIONS			

MARK	DATE	VAULT SERIAL NO.
		35668

APPROVED FOR ADVERTISING
NANCY LOCKE
DEPARTMENT OF FINANCE & ADMINISTRATIVE SERVICES
SEATTLE, WASHINGTON 20
BY:
PURCHASING & CONTRACTING SERVICES DIRECTOR

NAME OR INITIALS AND DATE	INITIALS AND DATE
DESIGNED	REVIEWED: DES. CONST. SDOT PROJ. MGR.
CHECKED	
DRAWN	RECEIVED
CHECKED	REVISED AS BUILT

ALL WORK SHALL BE DONE IN ACCORDANCE WITH THE CITY OF SEATTLE STANDARD PLANS AND SPECIFICATIONS AND OTHER DOCUMENTS CALLED FOR IN SECTION 0-02.3 OF THE PROJECT MANUAL.

TIMOTHY KIUSU KIM — STATE OF WASHINGTON — 38183 — REGISTERED PROFESSIONAL ENGINEER

Seattle Public Utilities
City of Seattle
Ray Hoffman, Director

ORDINANCE NO. APPROVED
FUND:
SCALE: 1"=10' INSPECTOR'S BOOK

52ND AVE S CSO REDUCTION & LOWER MAPES CREEK RESTORATION

JOB NO. PC C311054 R/W CO
VAULT PLAN NO. 774-889
SHEET 52 OF 53

P:\Project\C311054-Lower Mapes Creek Restoration\04-Design\A-Plot_Files\Carter\52 C311054-P-ELE-Plan-02.dwg
jonesjc Sep-06-12 3:14pm

NOTES:
(UNLESS OTHERWISE NOTED)

1. CONTRACTOR SHALL COORDINATE WITH PROJECT OWNER FOR CABINET FOOTPRINTS AND DELIVERING SCHEDULE PRIOR THE CONSTRUCTION. OWNER PROVIDES THE CABINET WHICH SHALL BE INSTALLED ON THE CONCRETE FOUNDATION BY CONTRACTOR.
2. OWNER SHALL PROVIDE AND INSTALL FLOW MONITOR INSTRUMENT.
3. OWNER SHALL PROVIDE AND INSTALL BATTERY BANKS.
4. INSTALL TWO 1.5" 90° RGS ELBOW CONDUIT STUBS THROUGH CONCRETE PAD FOR THE INSTRUMENT CABLES. INSTALL SEAL–OFF FITTING AND SEALING COMPOUND TO CONDUITS LEADING TO HAZARDOUS AREA PER NEC ARTICLES 300.
5. INSTALL A 3/4"x10' CU GROUND ROD THROUGH CABINET FOUNDATION AND BONDING TO THE CABINET PER NEC.
6. INSTALL THE CABINET CONCRETE FOUNDATION PER COS STANDARD PLAN NO 500a. NO REBAR NEEDED.
7. CONTRACTOR SHALL PROVIDE AND INSTALL THE INSTRUMENT CABLES AS SPECIFIED BY OWNER.

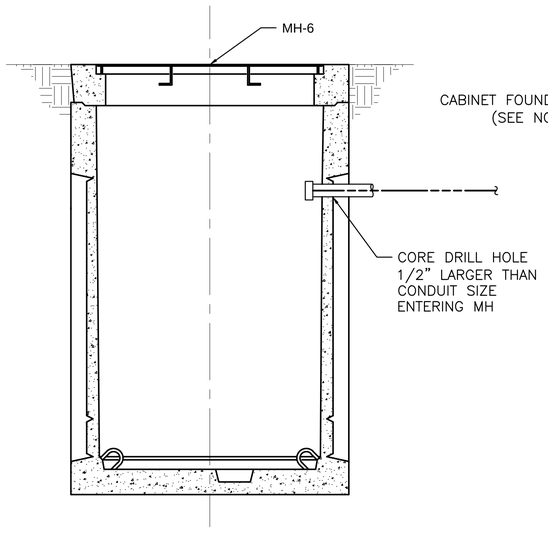

TYPICAL MH ELEVATION

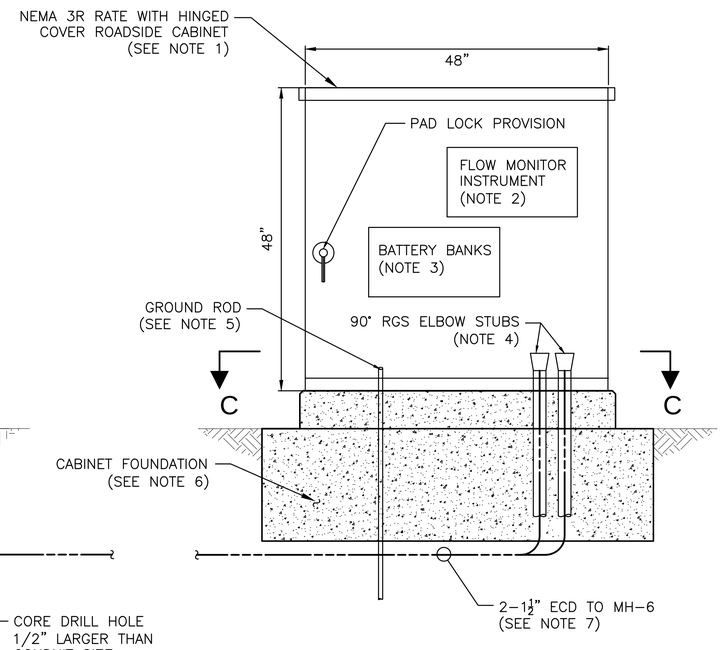

FRONT VIEW

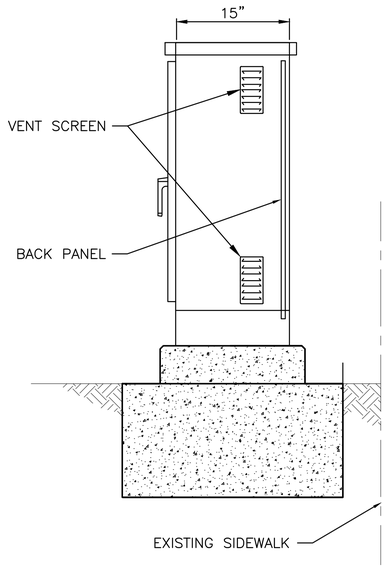

SIDE VIEW

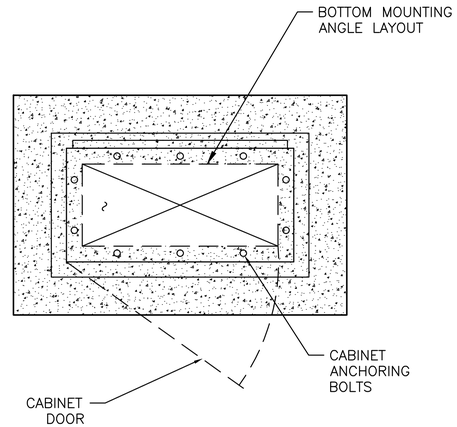

PLAN VIEW

SECTION C–C
NTS

ROADSIDE CABINET ELEVATION DETAILS 1/–
NTS

60% COMPLETE SIP
(NOT FOR CONSTRUCTION)

S. HENDERSON ST.
ROADSIDE CABINET ELEVATION DETAIL

APPROVED FOR ADVERTISING
NANCY LOCKE
DEPARTMENT OF FINANCE & ADMINISTRATIVE SERVICES
SEATTLE, WASHINGTON 20
BY:
PURCHASING & CONTRACTING SERVICES DIRECTOR

NAME OR INITIALS AND DATE	INITIALS AND DATE
DESIGNED	REVIEWED:
CHECKED	DES. CONST.
	SDOT PROJ. MGR.
DRAWN	RECEIVED
CHECKED	REVISED AS BUILT

ALL WORK SHALL BE DONE IN ACCORDANCE WITH THE CITY OF SEATTLE STANDARD PLANS AND SPECIFICATIONS AND OTHER DOCUMENTS CALLED FOR IN SECTION 0–02.3 OF THE PROJECT MANUAL.

TIMOTHY KITSU KIM — STATE OF WASHINGTON — 38183 — REGISTERED PROFESSIONAL ENGINEER

Seattle Public Utilities
City of Seattle
Ray Hoffman, Director

ORDINANCE NO.
FUND:
SCALE: AS NOTED
APPROVED
INSPECTOR'S BOOK

52ND AVE S CSO REDUCTION & LOWER MAPES CREEK RESTORATION

JOB NO. PC C311054 R/W CO
VAULT PLAN NO. 774–889
SHEET 53 OF 53

MARK	DATE	NATURE REVISIONS	MADE	CHK'D	REV'D

VAULT SERIAL NO. 35668

P:\Project\C311054–Lower Mapes Creek Restoration\04–Design\A–Plot_Files\53 C311054–P–ELE–Cabinet Detail.dwg
jonesjs Sep–06–12 3:14pm