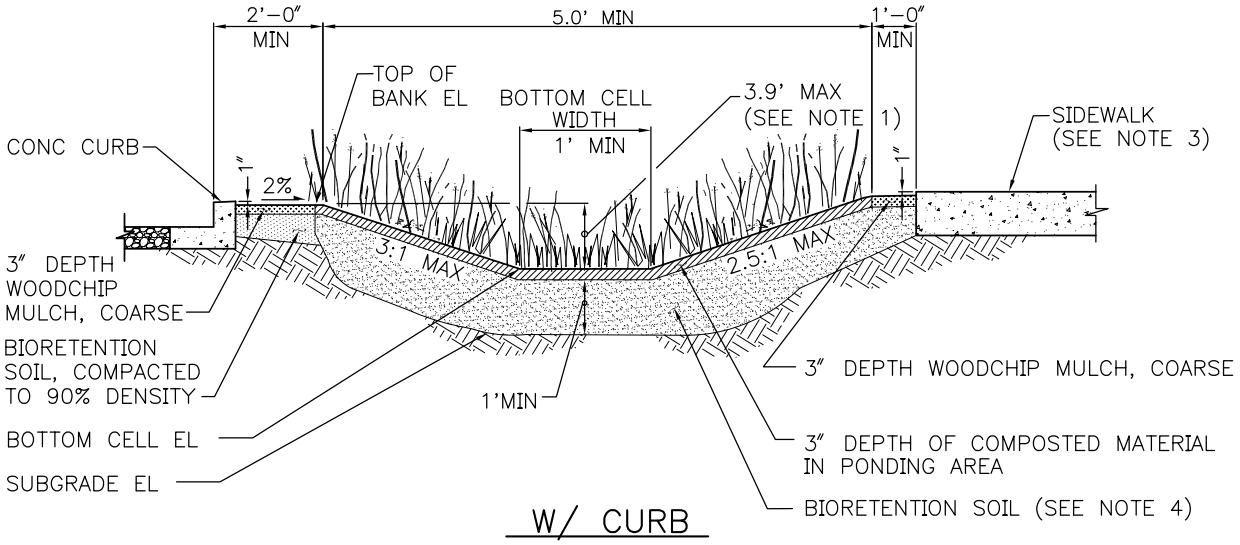

W/ CURB

NTS

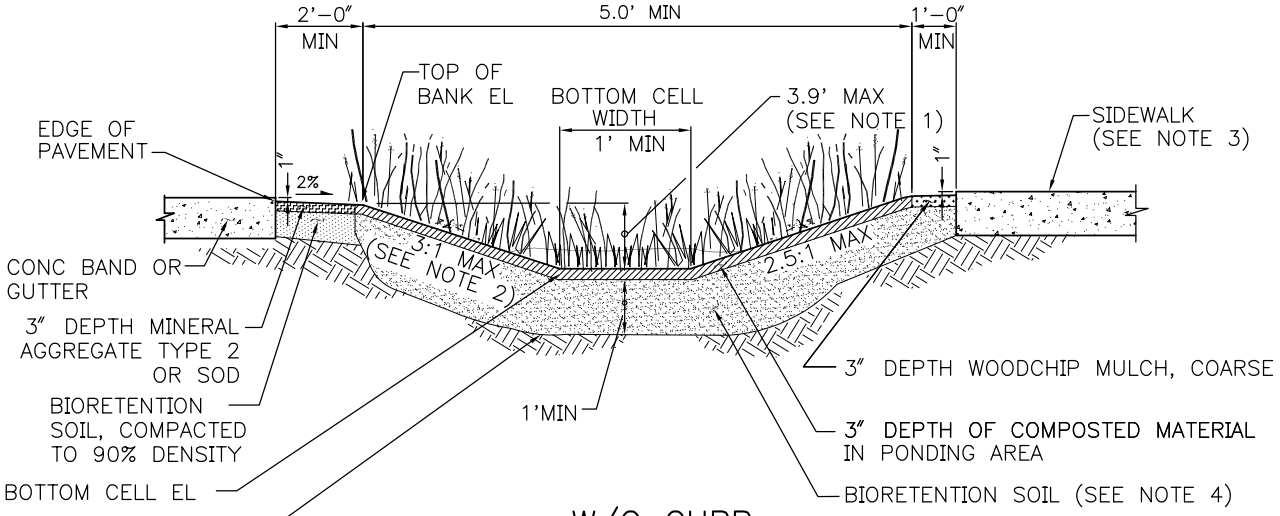

W/O CURB

NTS

NOTE:
1. DEPTH OVER 4' REQUIRES GUARD RAIL.
2. 4:1 MAX WHEN WITHIN 50-FEET OF INTERSECTIONS
3. SIDEWALK ELEVATION MUST BE SET ABOVE OVERFLOW ELEVATIONS.
4. SCARIFY SUBGRADE 3" MIN BEFORE BIORETENTION SOIL INSTALLATION.

APPLICATION OF THESE DETAILS REQUIRE APPROVAL FROM SDOT AND SPU.

SEATTLE RIGHT-OF-WAY manual

BIORETENTION, BIOFILTRATION CELL

JANURARY 2010

FIGURE

6-15

P:\Utility\C333206_Std_Details\Plot Files\15 C333206_P15.dwg
BeckC Apr-27-10 2:16pm Xrefs: | TitleBlock-letter | NDS_Bioretention_Swale |

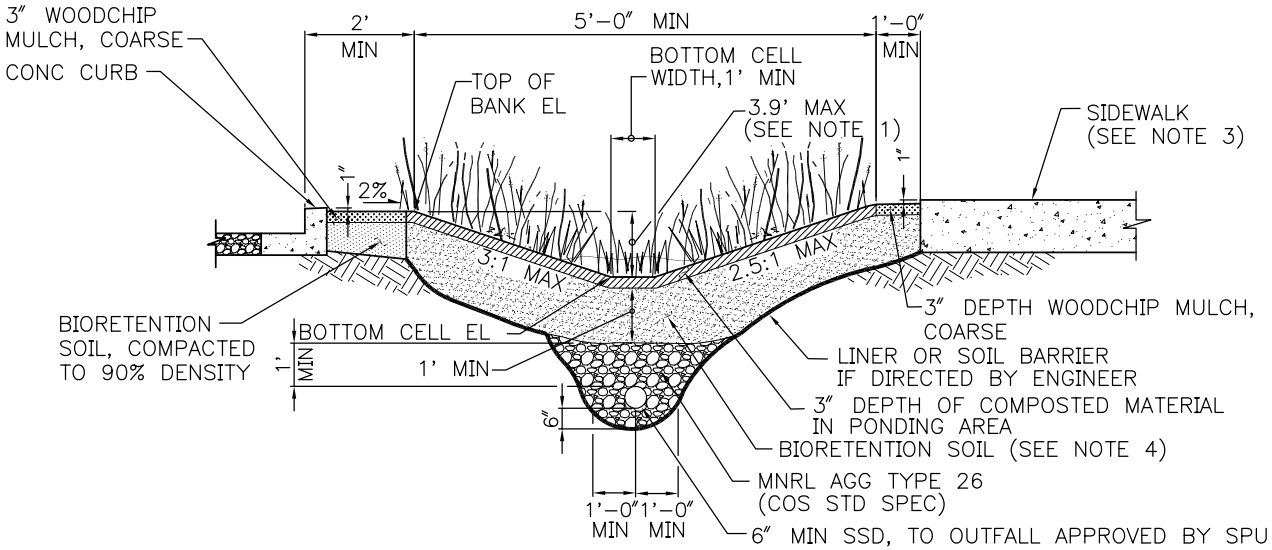

W/ CURB
NTS

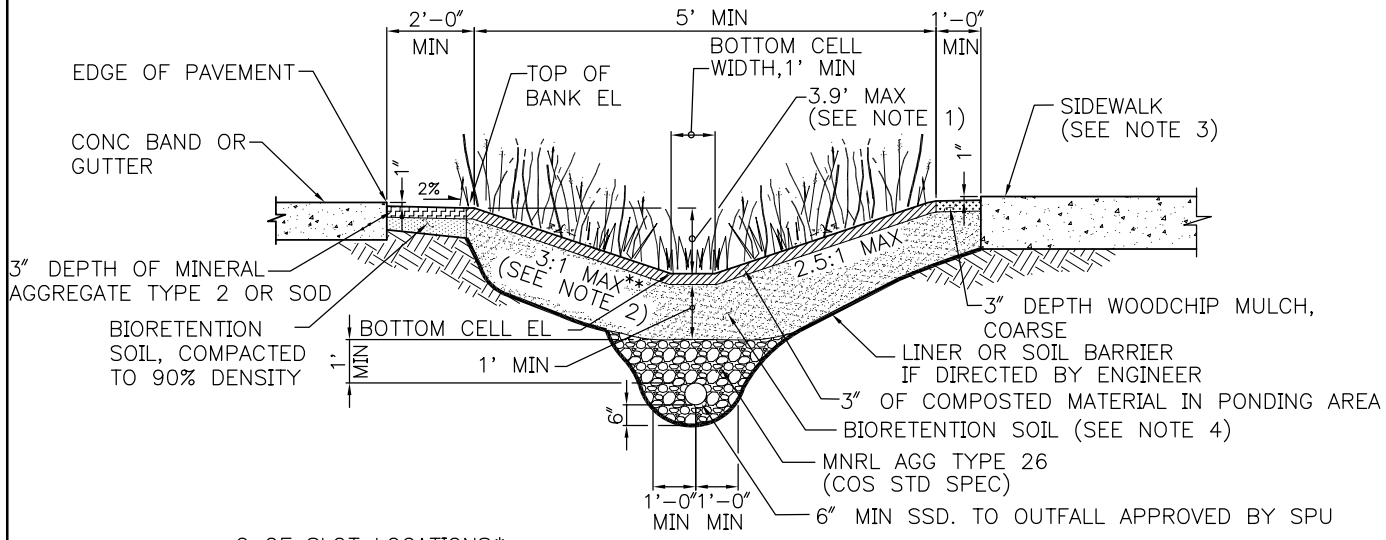

W/O CURB
NTS

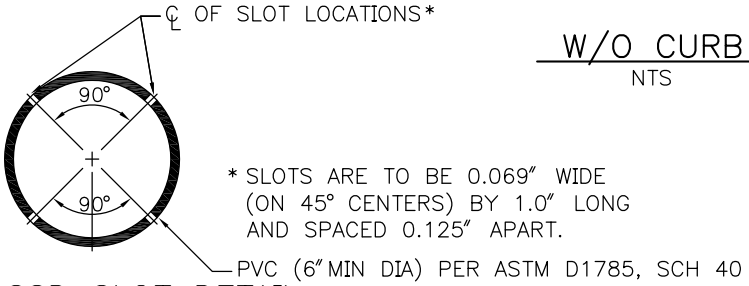

SSD SLOT DETAIL
NTS

NOTE:
1. DEPTH OVER 4' REQUIRES GUARD RAIL.
2. 4:1 MAX WHEN WITHIN 50-FEET OF INTERSECTIONS
3. SIDEWALK ELEVATION MUST BE SET ABOVE OVERFLOW ELEVATIONS.
4. SCARIFY SUBGRADE 3" MIN BEFORE BIORETENTION SOIL INSTALLATION.

APPLICATION OF THESE DETAILS REQUIRE APPROVAL FROM SDOT AND SPU.

SEATTLE RIGHT-OF-WAY manual

BIORETENTION, BIOFILTRATION CELL W/UNDER DRAIN

JANURARY 2010

FIGURE
6-16

P:\Utility\C333206_Std_Details\Plot Files\16 C333206_P16.dwg
BeckC Apr-27-10 2:17pm Xrefs: | TitleBlock-letter | NDS_Bioretention_Swale_SSD |

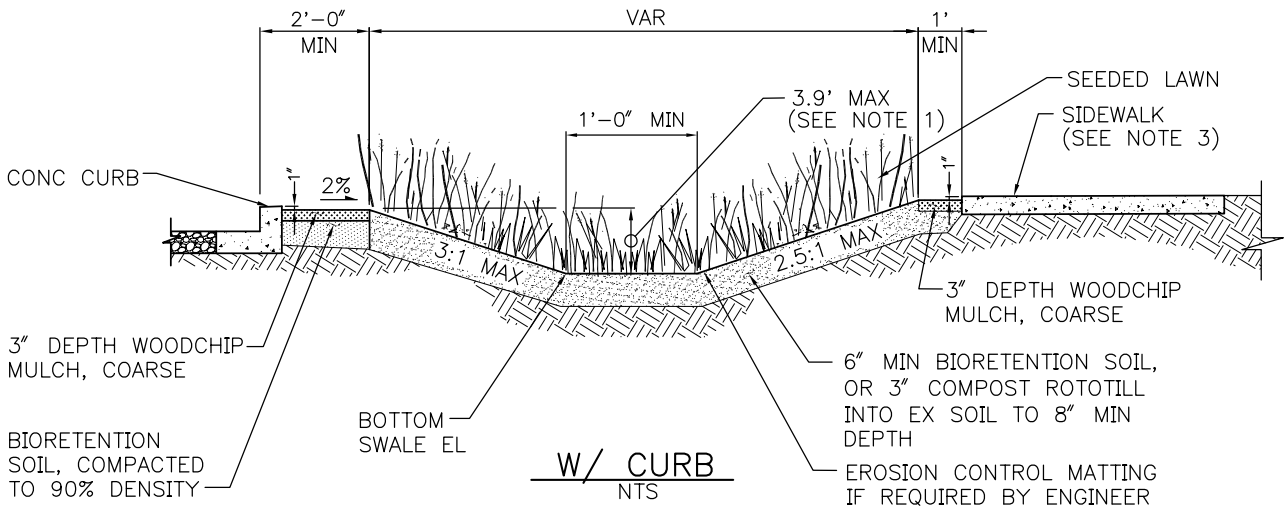

W/ CURB
NTS

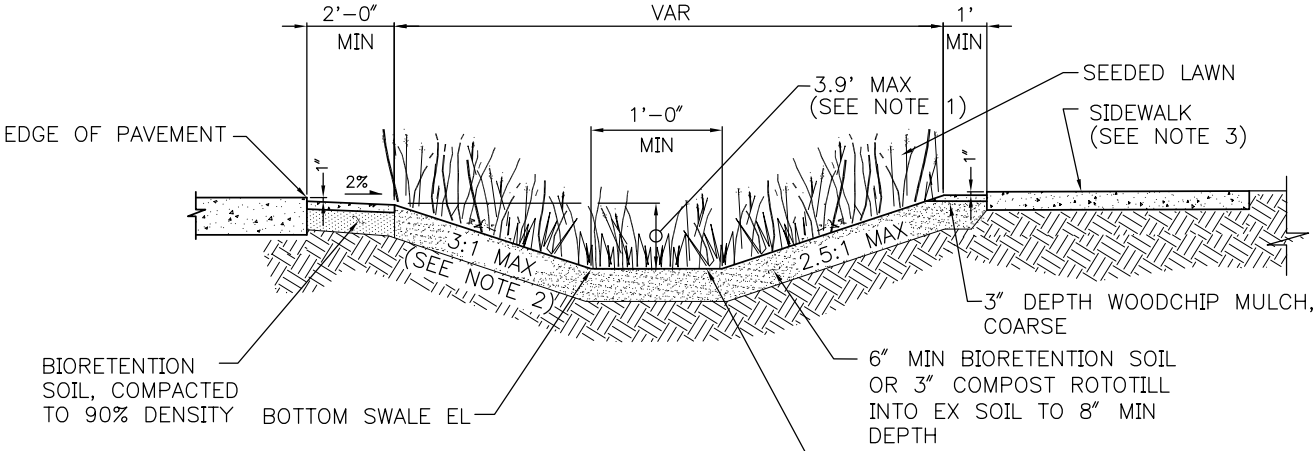

W/O CURB
NTS

NOTE:
1. DEPTH OVER 4' REQUIRES GUARD RAIL.
2. 4:1 MAX WHEN WITHIN 50–FEET OF INTERSECTIONS
3. SIDEWALK ELEVATION MUST BE SET ABOVE OVERFLOW ELEVATIONS.
4. LONGITUDINAL SLOPE ≥4% CHECK DAM REQUIRED.

APPLICATION OF THESE DETAILS REQUIRE APPROVAL FROM SDOT AND SPU.

SEATTLE RIGHT-OF-WAY manual

CONVEYANCE SWALE

JANURARY 2010

FIGURE

6–17

P:\Utility\C333206_Std_Details\Plot Files\17 C333206_P17.dwg
BeckC Apr–27–10 2:22pm Xrefs: | TitleBlock–letter | NDS_Conveyance_Swale |

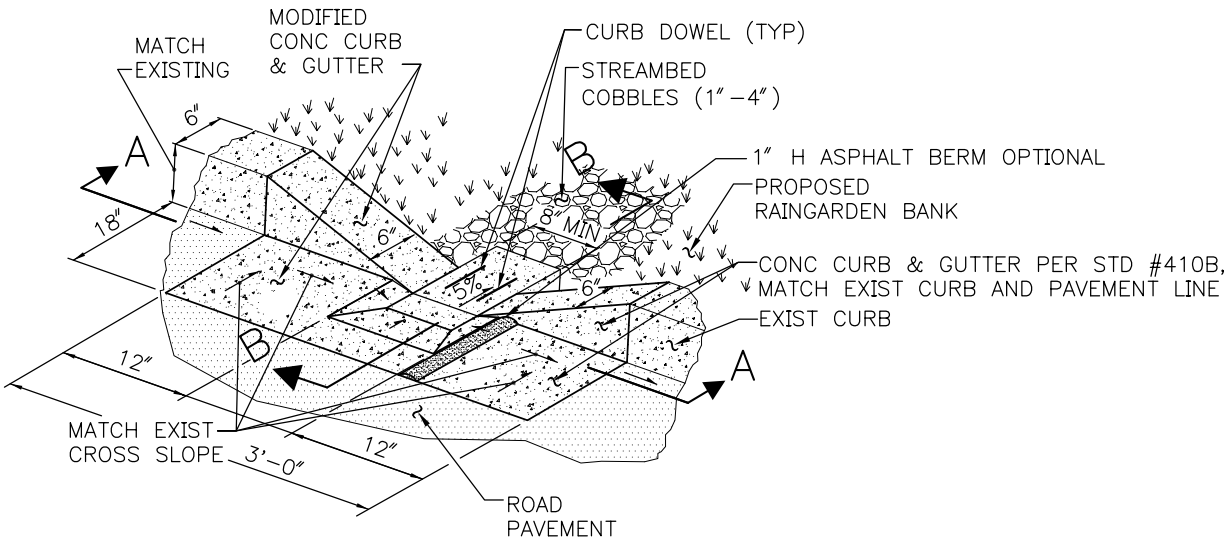

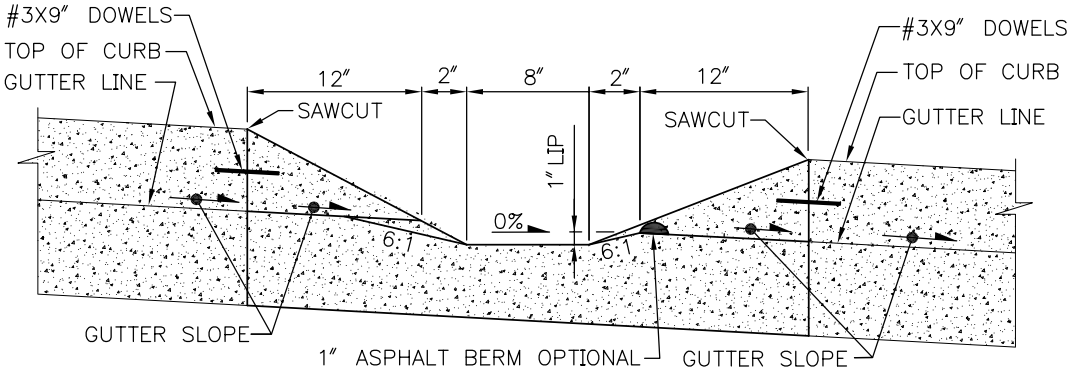

SECTION A–A

SCALE: NTS

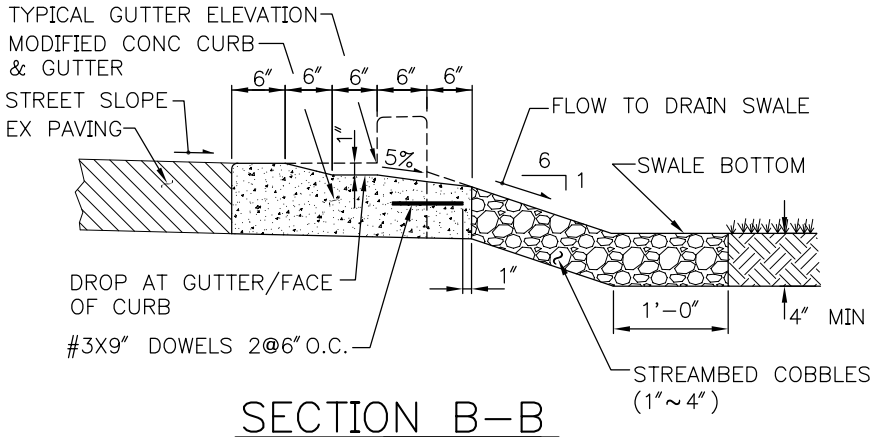

SECTION B–B

SCALE: NTS

APPLICATION OF THESE DETAILS REQUIRE APPROVAL FROM SDOT AND SPU.

SEATTLE RIGHT-OF-WAY manual

CURB DRAIN CUT OPENING FOR SWALE

JANURARY 2010

FIGURE

6–18

P:\Utility\C333206_Std_Details\Plot Files\18 C333206_P18.dwg
BeckC Apr–27–10 2:24pm Xrefs: | TitleBlock–letter | Drain_Curb_Cut_Opening_for_Swale |

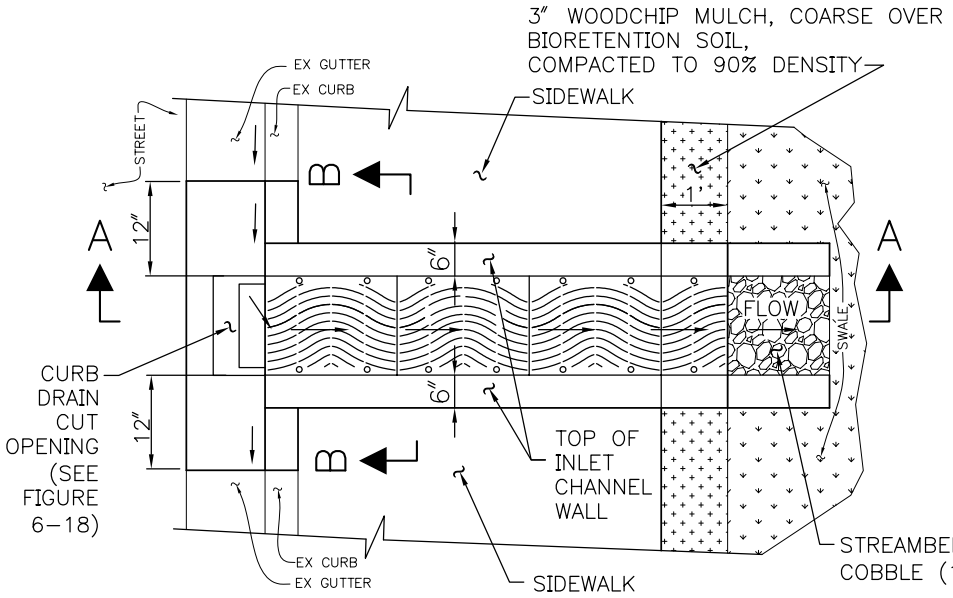

PLAN
NTS

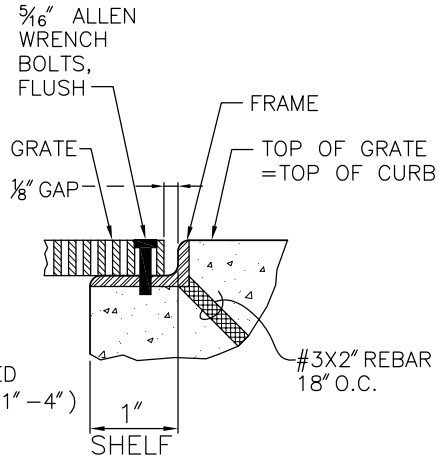

GRATING & FRAME (1 / 6-19)
NTS

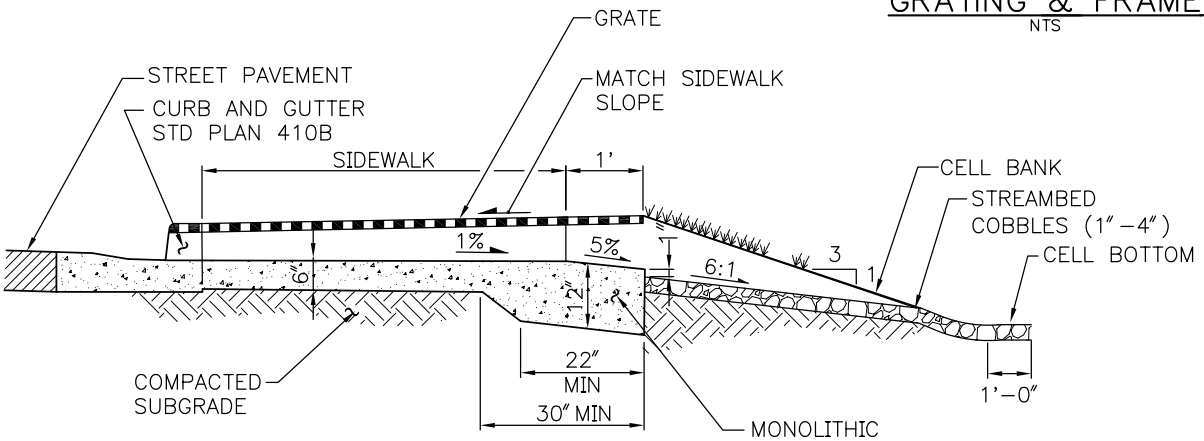

SECTION A-A
NTS

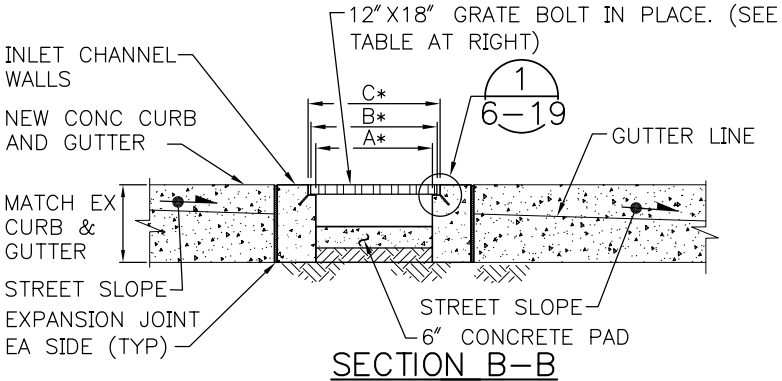

SECTION B-B
NTS

*TRENCH GRATING

A* TRENCH WIDTH	B* GRATE WIDTH	C* FRAME WIDTH
10"	11 7/8"	12 1/8"
16"	17 7/8"	18 1/8"

NOTE: MAXIMUM GRATE HOLE WIDTH (OPEN) 1/4". GRATE SIZE 12"X18" OR 18"X24". CAST IRON URBAN ACCESSORIES TRENCH GRATE AND FRAME. TIDAL WAVE MODEL OR EQUAL.

APPLICATION OF THESE DETAILS REQUIRE APPROVAL FROM SDOT AND SPU.

SEATTLE RIGHT-OF-WAY manual

CONCRETE INLET, CHANNEL & GRATE

JANURARY 2010

FIGURE 6-19

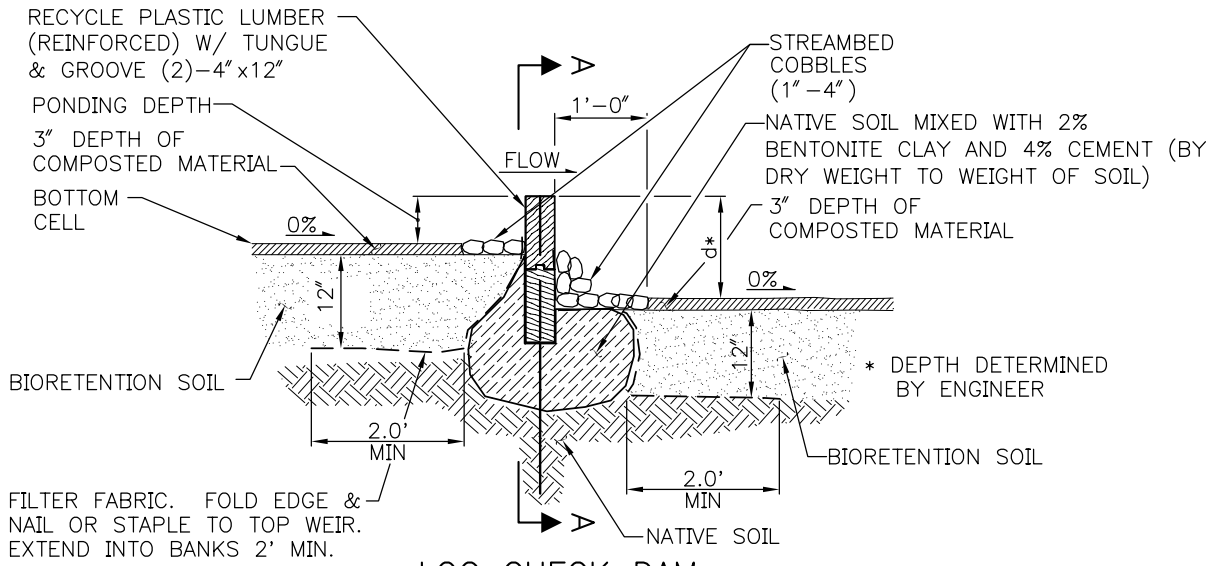

LOG CHECK DAM
NTS

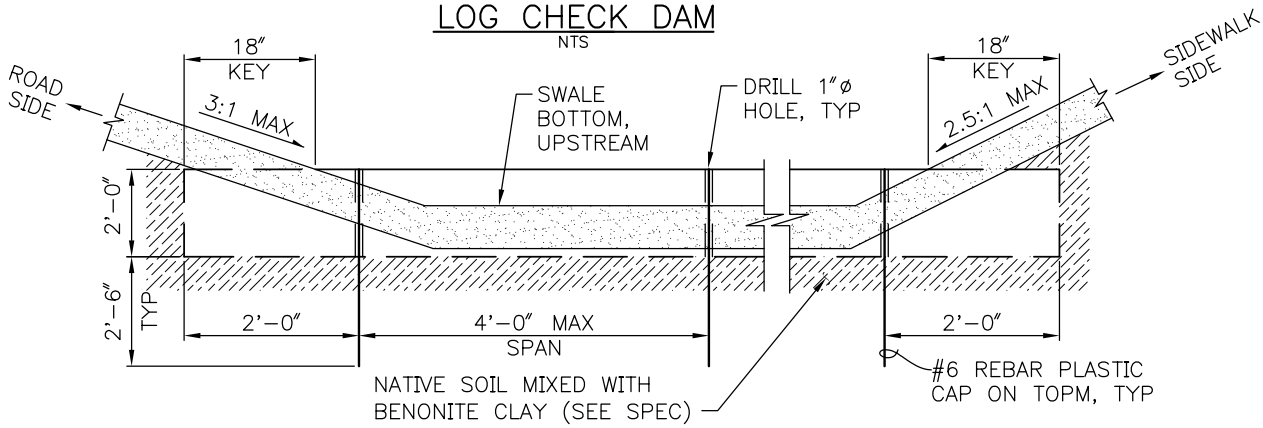

SECTION A–A
NTS

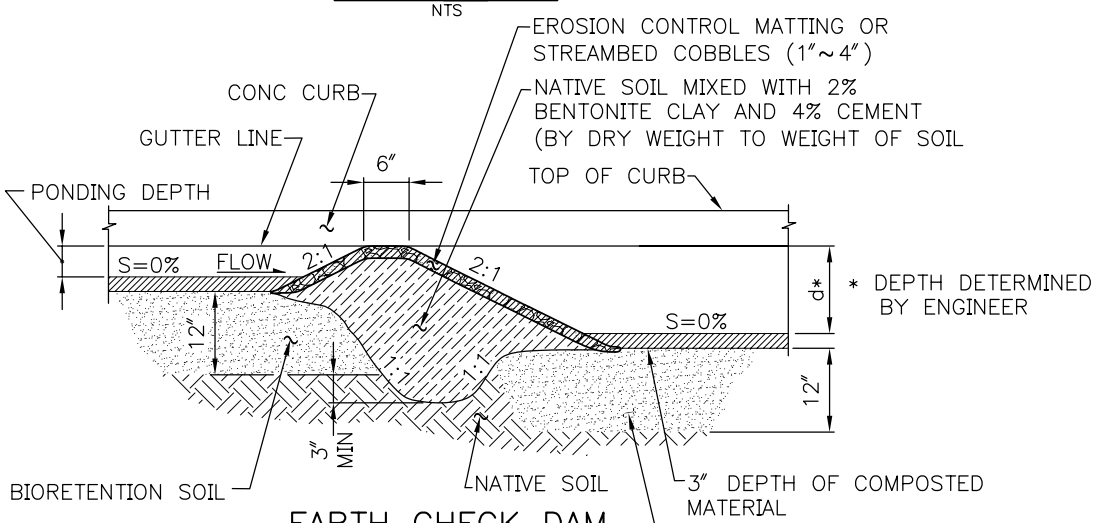

EARTH CHECK DAM
NTS

APPLICATION OF THESE DETAILS REQUIRE APPROVAL FROM SDOT AND SPU.

SEATTLE RIGHT-OF-WAY manual

CHECK DAM

JANURARY 2010

FIGURE

6–20

P:\Utility\C333206_Std_Details\Plot Files\20 C333206_P20.dwg
BeckC Apr–27–10 2:29pm Xrefs: | TitleBlock–letter | Check_Dam_Detl |

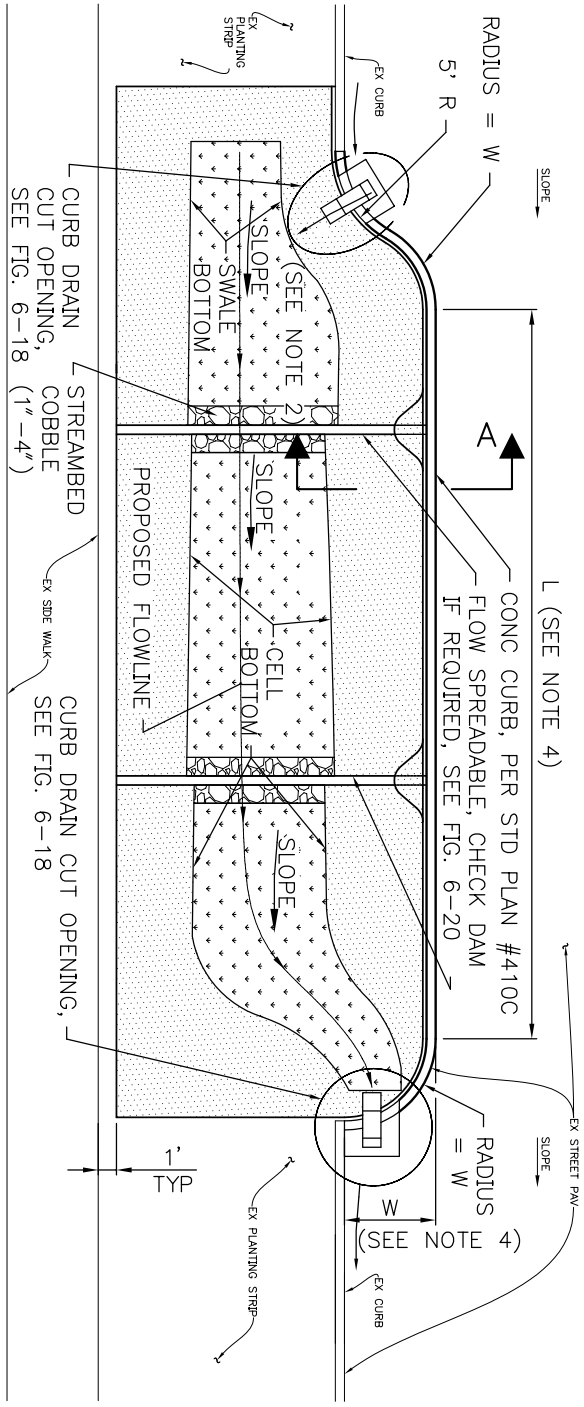

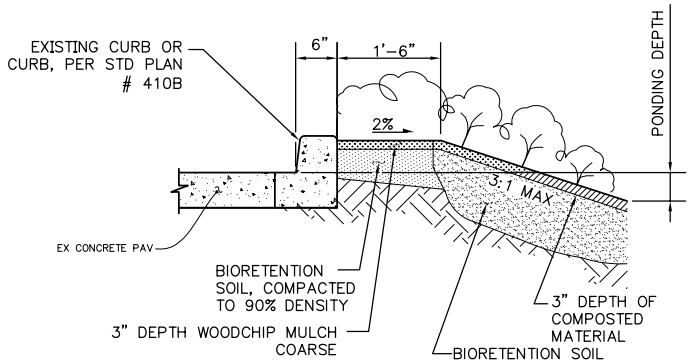

SECTION A–A
NTS
(ADJACENT TO PARKING ZONE)

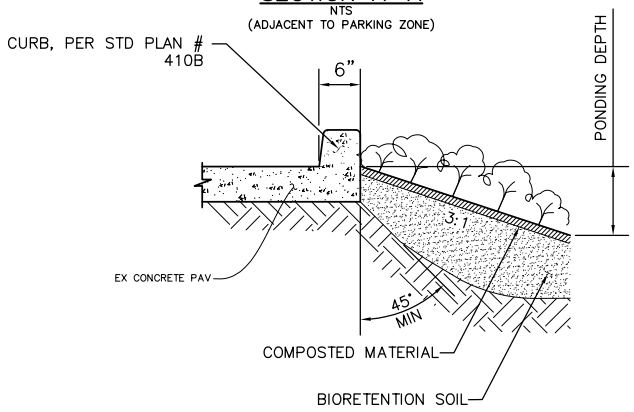

SECTION A–A
NTS
(ADJACENT TO NON-PARKING ZONE)

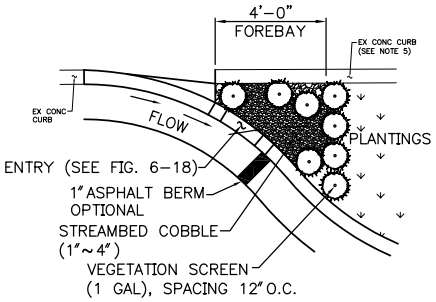

FORBAY DETAIL

NOTES:

1. SUITABLE FOR STREET LONGITUDINAL SLOPE OF LESS THAN 6%.
2. PLANTER BOTTOM SLOPE: 0% FOR BIORETENTION, 1.5% FOR BIOFILTRATION OR DETERMINED BY ENGINEER.
3. SIDEWALK ELEVATION MUST BE SET ABOVE INLET AND OUTLET ELEVATIONS TO ALLOW OVERFLOW TO DRAIN TO STREET.
4. LENGTH (L) AND WIDTH (W) DETERMINED BY ENGINEER.
5. WHERE FEASIBLE WIDTH OF STORMWATER FACILITY MAY EXTEND INTO EXISTING PLANTING STRIP, IN WHICH CASE, EXISTING CURB WOULD BE REMOVED.

APPLICATION OF THESE DETAILS REQUIRE APPROVAL FROM SDOT AND SPU.

SEATTLE RIGHT-OF-WAY manual

CURB EXTENSION

FIGURE 6–21

JANURARY 2010

P:\Utility\C333206_Std_Details\Plot Files\21 C333206_P21.dwg
BeckC Apr-27-10 2:31pm Xrefs: | TitleBlock-letter | Curb_Extension |

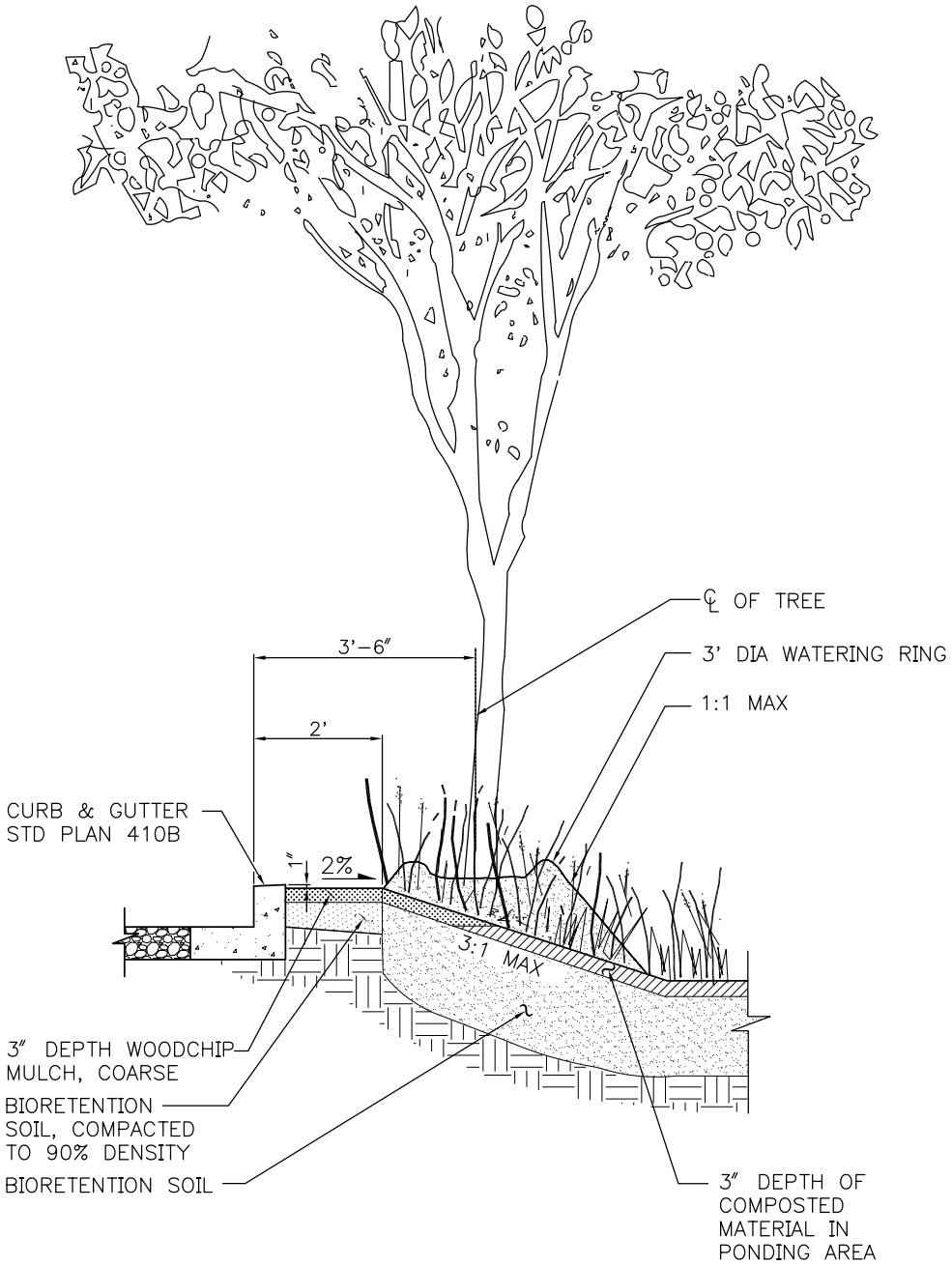

APPLICATION OF THESE DETAILS REQUIRE APPROVAL FROM SDOT AND SPU.

SEATTLE RIGHT-OF-WAY manual

TREE PLANTING WITHIN BIORETENTION SWALE

JANURARY 2010

FIGURE

6-22

P:\Utility\C333206_Std_Details\Plot Files\22 C333206_P22.dwg
BeckC Apr-27-10 2:43pm Xrefs: | TitleBlock-letter | Tree Planting Plan Within Bioretention Swale |

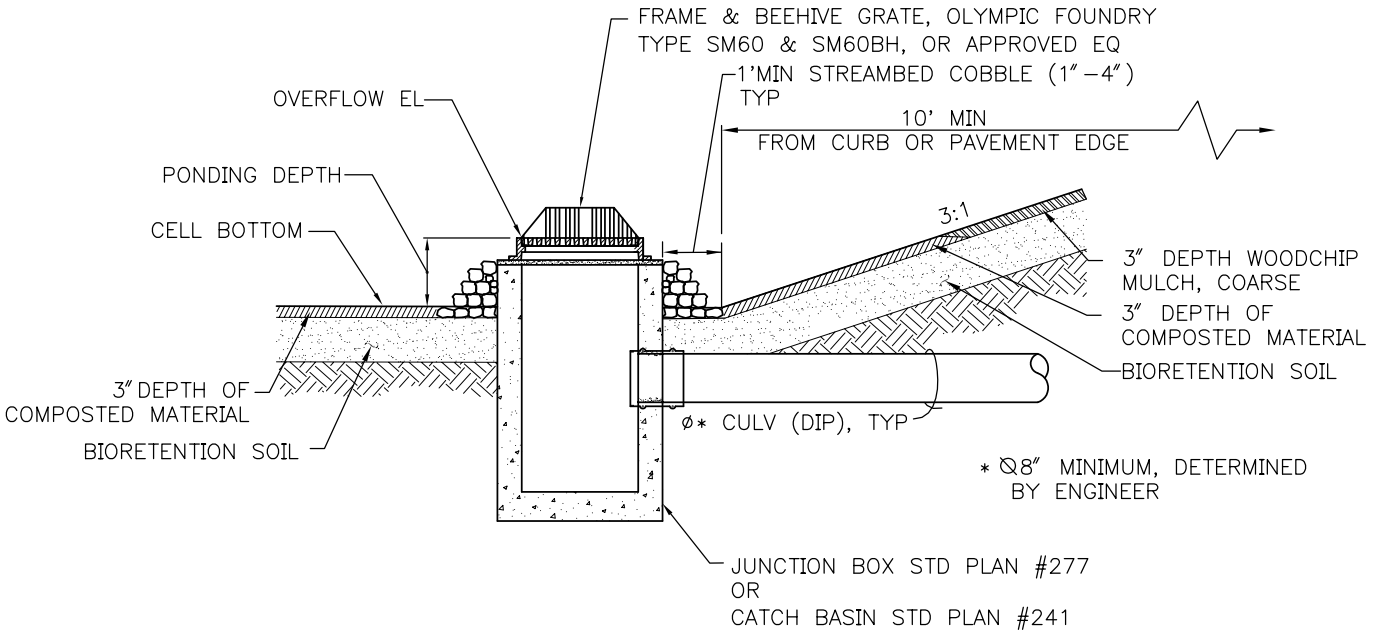

APPLICATION OF THESE DETAILS REQUIRE APPROVAL FROM SDOT AND SPU.

	OVER FLOW STRUCTURE	FIGURE 6–27
	JANURARY 2010	

P:\Utility\C333206_Std_Details\Plot Files\27 C333206_P27.dwg
BeckC Apr–27–10 2:49pm Xrefs: | TitleBlock–letter | OverFlow_Structure |

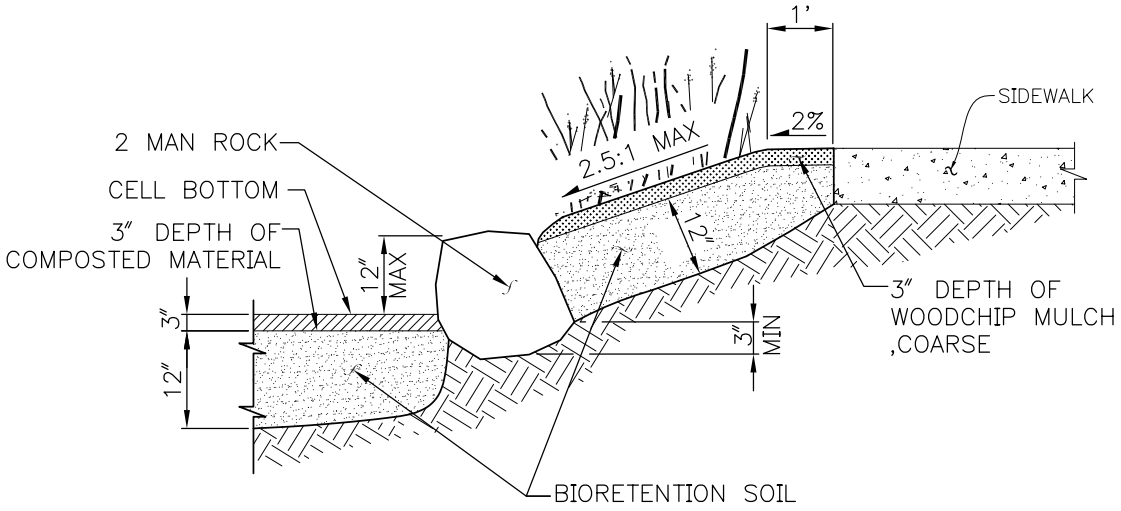

APPLICATION OF THESE DETAILS REQUIRE APPROVAL FROM SDOT AND SPU.

ONE FOOT ROCK FACING

JANURARY 2010

FIGURE

6–28

P:\Utility\C333206_Std_Details\Plot Files\28 C333206_P28.dwg
BeckC Apr–27–10 2:50pm Xrefs: | TitleBlock–letter | DETL_OneFootRockFacing |