Vertical Datums within the City of Seattle:

The National Geodetic Survey (NGS) Benchmark 944 7130 TIDAL 7 PID SY0289 is a disk set 3.0 feet above the concrete sidewalk in the SW granite cornerstone of the National Building located on the NE corner of the intersection of the Western Avenue and Madison Street, Seattle, Washington.

The following elevations are values for that benchmark in different datums.

NAVD 88 = 19.26 feet
NGVD 29 = 15.67 feet
King Co & Metro = 115.67
Obsolete COS Datum = 9.54 feet
USACOE = 22.51 feet
MLLW = 21.59 feet

NAVD88 = The North American Vertical Datum of 1988 (Official City of Seattle Datum per Ordinance #121291 of October 9, 2003)

NGVD 29 = The National Geodetic Vertical Datum of 1929

King Co & Metro = Add 100 feet to NGVD 29

Obsolete COS = The Old City of Seattle Elevation. Plans, profiles and records prior to 2004 use this datum. Add 9.7 feet to this datum to get to NAVD88.

USACOE = US Army Corps of Engineers Lake Washington & Lake Union Datum

MLLW = Mean Lower Low Water Datum (TIDAL EPOCH 1983 TO 2001)

NOTES

1. Tidal elevations vary according to tidal observations in 18 year epochs.
2. The Old (Obsolete) City of Seattle Datum varies between 9.1 and 9.9 feet below NAVD88 depending on the location in the City. The difference between these two datums must be ascertained from field observations in each specific area. Add approximately 9.7 feet to the old COS Datum to get to the NAVD elevation.

REF STD SPEC SEC 1-07.16(1)A, 1-07.28

City of Seattle	NOT TO SCALE	ELEVATIONS & DATUMS

REV DATE: JUL 2013

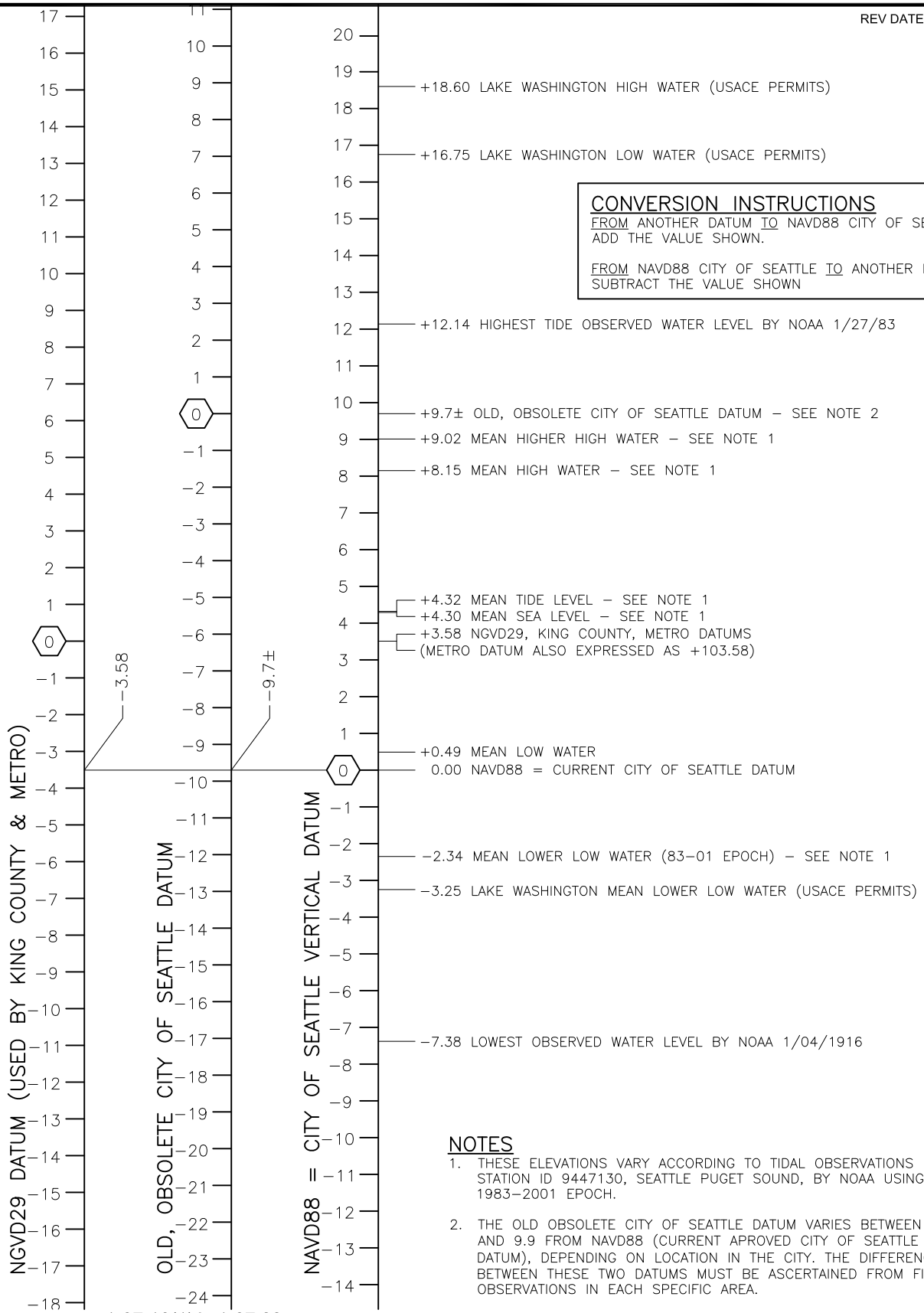

CONVERSION INSTRUCTIONS

FROM ANOTHER DATUM TO NAVD88 CITY OF SEATTLE, ADD THE VALUE SHOWN.

FROM NAVD88 CITY OF SEATTLE TO ANOTHER DATUM, SUBTRACT THE VALUE SHOWN

NOTES

1. THESE ELEVATIONS VARY ACCORDING TO TIDAL OBSERVATIONS FOR STATION ID 9447130, SEATTLE PUGET SOUND, BY NOAA USING 1983–2001 EPOCH.
2. THE OLD OBSOLETE CITY OF SEATTLE DATUM VARIES BETWEEN 9.2 AND 9.9 FROM NAVD88 (CURRENT APROVED CITY OF SEATTLE DATUM), DEPENDING ON LOCATION IN THE CITY. THE DIFFERENCE BETWEEN THESE TWO DATUMS MUST BE ASCERTAINED FROM FIELD OBSERVATIONS IN EACH SPECIFIC AREA.

REF STD SPEC SEC 1-07.16(1)A, 1-07.28

City of Seattle	NOT TO SCALE	ELEVATIONS & DATUMS

REV DATE: AUG 2013

ABAN	Abandon(ed)
ABW	Asphalt Bike Way
ACV	Automatic Control Valve
ACP	Asphalt Concrete Pavement
ADA	Americans with Disabilities Act
ADJ	Adjust
AHD	Ahead
AIC	Aerial Interconnect Cable
AL	Aluminum
AP	Angle Point
APP	Approved
APPROX	Approximate
APWA	American Public Works Association
ASPH	Asphalt
ATB	Asphalt Treated Base
AV	Air Valve
AVB	Automatic Vacuum Breaker
AVE	Avenue
AVG	Average
AW	Asphalt Walk
AWG	American Wire Gage
AWWA	American Water Works Assoc.
BAT	Backflow Assembly Tester
B&B	Ball & Burlap
BC	Bolt Circle, Back of Curb
BF	Bottom Face
BFV	Butterfly Valve
BK	Back
BLDG	Building
BLK	Block
BLKG	Blocking
BLKHD	Bulkhead
BLRD	Bollard

BLVD	Boulevard
BM	Bench Mark
BO	Blow Off
BOC	Beginning of Curb
BPD	Backflow Prevention Device
BR	Bare Root, Brick
BRG	Bearing
BRKN	Broken
BSMT	Basement
BTW	Between
BV	Ball valve
BVC	Beginning of Vertical Curve
C&G	Curb & Gutter
CAL	Caliper
CALC	Calculation
CB	Cable, Catch Basin
CBW	Concrete Bike Way
C–C	Center to Center
CC	Concrete Culvert
CD	Conduit
CDF	Controlled Density Fill
CEM	Cement
CF	Cubic Feet
CH	Chamber
CIP	Cast Iron Pipe
CL	Center Line or Class
℄	Center Line
CLF	Chain Link Fence
CLR	Clearance
CMP	Corrugated Metal Pipe
CO	Clean Out
COMP	Compression
CONC	Concrete

REF STD SPEC SEC 1-01.2

City of Seattle | NOT TO SCALE | ABBREVIATIONS

REV DATE: SEP 2013

COND	Condition
CONN	Connect/Connection
CONSTR	Construction
CONT	Continuous
CORP	Corporation
COS	City of Seattle
CPEP	Corrugated Polyethylene Pipe
CR	Cross, Curb Radius
CSB	Chief Seattle Base
CULV	Culvert
CW	Concrete Walk
CY	Cubic Yard
DB	Direct Burial Cable
DC	Direct Current
DCVA	Double Check Valve Assembly
DEPT	Department
DGV	District Gate Valve
DIA Ø	Diameter
DIP or DI	Ductile Iron Pipe
DIPRA	Ductile Iron Pipe Research Assoc.
DR	Drive
DS	Downspout
DWG	Drawing
DWY	Driveway
E	East
EA	Each
ECB	Electrical Cable
ECC	Eccentric
ECD	Electrical Conduit
ED	Electrical Duct
EL/ELEV	Elevation
ELEC	Electric/Electrical
EMH	Electrical Maintenance Hole

ENCL	Enclosure
ENGR	Engineer
EOC	End of Curb
EQ	Equal
ESAL	Equivalent Single Axle Loads
ESMT	Easement
EV	Electrical Vault
EVC	End of Vertical Curb
EW	Each Way
EX	Existing
EXP	Expansion
FACB	Fire Alarm Cable
FAHH	Fire Alarm Handhole
FC	Face of Curb
FCS	Flow Control Structure
FDN	Foundation
FF	Far Face, Finished Floor
FG	Finished Grade
FIG	Figure
FIPT	Female Iron Pipe Thread
FLG	Flange
FLR	Floor
FLT	Flat Bar
FM	Force Main
FO or FOC	Fiber Optics
FS	Far Side
FT	Feet
FTB	Fluidized Thermal Backfill
FTG	Footing
G	Gas
G REG	Gas Regulator
GA	Gauge
GAL	Gallon

REF STD SPEC SEC 1-01.2

City of Seattle | NOT TO SCALE | ABBREVIATIONS

GALV	Galvanize/Galvanized
GAS V	Gas Valve
GFCI	Ground Fault Circuit Interrupter
GIP	Galvanized Iron Pipe
GM	Gas Meter
GND	Ground
GP	Guy Pole
GPM	Gallons Per Minute
GR	Grade
GRHH	Ground Rod Handhole
GS	Gas Service
GSI	Green Stormwater Infrastructure
GSP	Galvanized Steel Pipe
GV	Gate Valve
GVC	Gate Valve Chamber
GVL	Gravel
HB	Horizontal Bend
HBR	Hose Bib Riser
HDPE	High Density Polyethylene
HEX	Hexagon/Hexagonal
HGL	Hydraulic Grade Line
HH	Handhole
HI	High
HMA	Hot Mix Asphalt
HORIZ	Horizontal
HPG	High Pressure Gas
HPS	High Pressure Sodium
HR	Hour
HSE	House
HT	Height
HYD	Hydrant
ID	Inside Diameter/Dimension
I/D	Incentive/Disincentive

IE	Invert Elevation
IF	Inside Face
IN	Inch(es)
INL	Inlet
INT	Intersection
INV	Invert (Line)
IP(S)	Iron Pipe (Size)
IRC	Irrigation Controller
IRRG	Irrigation
IRRGV	Irrigation Valve
ISO	Isolation Coupling
JB	Junction Box
JT	Joint
K	Kips (1000 lbs)
KSI	Kips Per Square Inch
KV	Kilovolt
LAL	Limited Access Line
LB, LBS	Pound, Pounds
LF	Linear/Lineal Feet
LID	Local Improvement District
LIT	Large Inlet Top (Catch Basin)
LOC	Locate/Location
LONGIT	Longitudinal
LP	Light Pole
LS	Lump Sum
LSCAPE	Landscape, Landscaping
LT	Left
LTG	Lighting
LUM	Luminaire
MA	Mast Arm
MATL	Material
MAX	Maximum
MB	Mailbox

REF STD SPEC SEC 1-01.2

City of Seattle | NOT TO SCALE | ABBREVIATIONS

MCV	Manual Control Valve
MDV	Manual Drain Valve
MH	Maintenance Hole
MIC	Monument in Case
MIN	Minimum
MIPT	Male Iron Pipe Thread
MISC	Miscellaneous
MJ	Mechanical Joint
ML ℳ	Monument Line
MNRL AGG	Mineral Aggregate
MOD	Modify/Modified
MON	Monument
MW	Monitor Well
N	North
NAD	North American Datum
NAVD	North American Vertical Datum
NF	Near Face
NGVD	National Geodetic Vertical Datum
NIC	Not in Contract
NO	Number
NOM	Nominal
NS	Near Side
NTS	Not To Scale
OC	On Center
OD	Outside Diameter/Dimension
OF	Outside Face
OH	Overhead
PAV	Pavement
PC	Point of Curvature
PCC	Point of Compound Curve
PDP	Perforated Drain Pipe
PE	Plain End
PED	Pedestrian

PG	Performance Grade
PH	Phase
PI	Point of Intersection
PL	Plate, Place, Polyethylene
ℙ	Property Line
POC	Point on Curve
PP	Power Pole
PPB	Pedestrian Push Button
PR	Pair
PRC	Point of Reverse Curve
PROP	Proposed
PRKG	Parking
PRV	Pressure Reducing Valve
PS	Pipe Sewer Combined
PSD	Pipe Storm Drain
PSDD	Pipe Storm Drain Detention
PSI	Pounds per Square Inch
PSIA	Pounds per Square Inch Absolute
PSIG	Pounds per Square Inch Gauge
PSS	Pipe Sewer Sanitary
PT	Point of Tangency
PVB	Pressure Vacuum Breaker
PVC	Polyvinyl Chloride
PVT	Private
QTY	Quantity
R	Radius
R&R	Remove & Replace
R/W	Right of Way
RCP	Reinforced Concrete Pipe
RD	Roof Drain
RDWY	Roadway
RECONN	Reconnect
RED	Reducer

REF STD SPEC SEC 1-01.2

REV DATE: JAN 2014

REF	Refer/Reference
REINF	Reinforce/Reinforcement
RELOC	Relocate
REM	Remove
REPL	Replace
REQD	Required
RET	Retire/Retired
RET WALL	Retaining Wall
RF	Rock Facing
RGS	Rigid Galvanized Steel
RIT	Round Inlet Top
RLWY	Railway
RP	Rock Pocket
RPBA	Reduced Pressure Backflow Assembly
RR	Railroad
RS	Rigid Steel
RT	Right
S	South
SB	Sandbox
SCH	Schedule
SCL	Seattle City Light
SDS	Street Designation Sign
SD	Service Drain
SDOT	Seattle Department of Transportation
SEC	Section
SHLD	Shield
SHT	Sheet
SL	Sleeve, Street Light
℄	Survey Line
SLHH	Street Light Handhole
SNS	Street Name Sign
SP	Strain Pole
SPCS	Spaces

SPEC	Specifications
SPR	Seattle Parks & Recreation
SPU	Seattle Public Utilities
SQ	Square
SS	Stainless Steel, Side Sewer–Combined
SSD	Sub–Surface Drain
SSS	Side Sewer–Sanitary
SSTONE	Sandstone
ST	Street
STA	Station
STD	Standard
STL	Steel
STL P	Steel Pipe
STM LOG	Steam Log
STRUCT	Structure/Structural
SW	Sidewalk
SY	Square Yard
SYS	System
T	Tee
TB	Test Boring
TC	Traffic Control
TCB	Telephone Cable
TCD	Telephone Conduit
TCHH	Traffic Control Handhole
TD	Telephone Duct
TEB	Telephone Enclosure Box
TEL	Telephone
TEMP	Temporary
TF	Top Face
TH	Test Hole
THH	Telephone Handhole
TJO	Transfer of Jurisdiction Ordinance
TMH	Telephone Manhole

REF STD SPEC SEC 1-01.2

City of Seattle	NOT TO SCALE	ABBREVIATIONS

TMT	Treatment
TN	Ton
TR	Traffic
TRCB	Traffic Signal Cable
TRCD	Traffic Signal Conduit
TRSCC	Traffic Signal Controller Cabinet
TVCB	Television Cable
TVHH	Television Handhole
TYP	Typical
UG	Underground
UIC	Underground Interconnect
UNC	Unified National Course
UP	Utility Pole
V	Valve, Variable
V/C	Vertical Curve
VAR	Variable/Varies
VB	Vertical Bend
VBOX	Valve Box
VCH or VC	Valve Chamber
VCP	Vitrified Clay Pipe
VEH	Vehicle
VERT	Vertical
VMS	Variable Message Sign
VO	Vacation Ordinance
W	Water, West
W/	With
WCR	Walkway Curb Ramp
WD	Wood/Wooden
WF	Wood Fence
WIF	Wrought Iron Fence
WM	Water Meter, Water Main
WMA	Warm Mix Asphalt
WMR	Water Main Radius

WP	Wood Pole
WS	Water Service
WSP	Wood Stave Pipe
WU	Western Union
WV	Water Valve
WWF	Welded Wire Fabric
XP	Transmission Pole

REF STD SPEC SEC 1-01.2

City of Seattle

NOT TO SCALE

ABBREVIATIONS

REV DATE: JAN 2013

ITEM	EXISTING	PROPOSED
Signal Controller Cabinet		
Electrical Vault	EV	EV
Electrical Conduit	1"ECD	1"ECD
Electrical Cable (direct burial)	ECB	ECB
Electrical Duct	12"X12"ED	12"X12"ED
Combined Electrical & Telephone Duct	12"X12"ED-TD	12"X12"ED-TD
Span Wire		
Aerial Interconnect Cable	AIC	AIC
Transmission Pole (steel w/ conc base)	XP	
City Wood Pole	EPP	
City Wood Pole w/ HPS	PP	

REF STD SPEC SEC

City of Seattle	NOT TO SCALE	STANDARD SYMBOLS ELECTRICAL

REV DATE: AUG 2013

ITEM	EXISTING	PROPOSED
Light Pole (metal) w/ HPS	LP	
Strain Pole (metal)	CURB	CURB
Combined Lighting Strain Pole HPS		
Luminaire		
Mercury Vapor Luminaire	M	
Double Light Pole		
Utility Wood Pole	UP	
Utility Guy Pole	GP	GP
Anchor		
Ground		

REF STD SPEC SEC

City of Seattle

NOT TO SCALE

STANDARD SYMBOLS ELECTRICAL

REV DATE: MAR 2010

ITEM	EXISTING	PROPOSED
Traffic Signal Mast Arm Pole	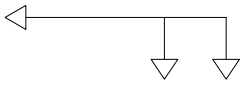	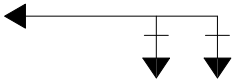
Traffic Signal Mast Arm Pole w/ Luminaire	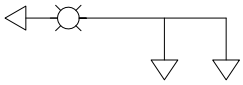	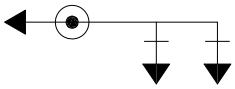
Traffic Signal on Span Wire	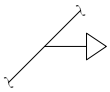	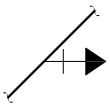
Multi-Directional Traffic Signal on Span Wire	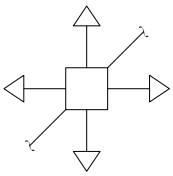	
Traffic Signal Conduit		
Traffic Signal Cable		
Detector Loop, Dipole (loop schedule)	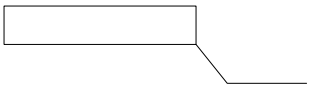	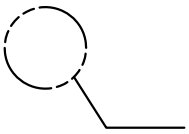
Detector Loop, Quadrapole (loop schedule)	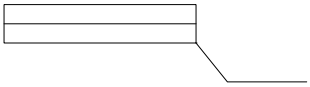	
Pressure Detector		

REF STD SPEC SEC

City of Seattle	NOT TO SCALE	STANDARD SYMBOLS ELECTRICAL

REV DATE: JAN 2013

ITEM	EXISTING	PROPOSED
Signal Pedestal		
Vehicle Signal		
Vehicle Signal w/ Backplate		
Vehicle Signal (optically programmed)		
Pedestrian Signal		
Pedestrian Signal (optically programmed)		
Pedestrian Push Button Post		
Pedestrian Push Button		PPB
Illuminated Sign		
Junction Box		
Handhole	EHH	HH
Traffic Control Handhole	TCHH	TCHH
Streel Light Handhole	SLHH	SLHH
Ground Rod Handhole	GRHH	GRHH
Fire Alarm Handhole	FAHH	FAHH

REF STD SPEC SEC

City of Seattle | NOT TO SCALE | STANDARD SYMBOLS ELECTRICAL

REV DATE: MAR 2010

SIGNALIZATION

Vehicle & Pedestrian Signal Head
(?=Identification Number)

Illuminated Traffic Sign
(?=Identificaiton Number)

Cable Runs
(?=Run Number per Wiring Schedule)

Removal/Relocation Item
(?=Identification Number per Removal/Relocation Plan)

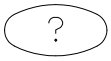

Construction Item
(?=Identification Number per Signalization Plan)

Signal Poles, Signal Pedestals, Push Button Pedestals & Push Buttons Identified by Number on Signalization Plan.

CHANNELIZATION & SIGNAGE

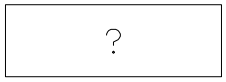

Install Channelization Signage
(?=Channelization / Signage Identified on Plan)

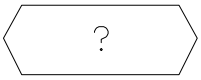

Remove Channelization / Signage
(?=Channelization / Signage Identified on Plan)

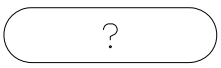

Relocate Signage
(?=Signage Identified on Plan)

REF STD SPEC SEC

City of Seattle	NOT TO SCALE	STANDARD SYMBOLS SIGNALIZATION/CHANNELIZATION & SIGNAGE

REV DATE: MAR 2010

ITEM	EXISTING	PROPOSED
Cement Concrete Pavement	6"CONC	6"CONC PAV
Asphalt Concrete Pavement	2"ASPH/6"CONC	8"–402B PAV
Asphalt Concrete Surfacing	2"ASPH	2"ASPH
Curb		TYPE 410C CURB
Cement Concrete Walk	CW	CW
Curb Ramp		
Conc Dwy		
Cement Concrete Bike Way	3"CBW	3"CBW
Asphalt Concrete Bike Way	3"ABW	3"ABW
Grading	GRADED	TO BE GRADED

REF STD SPEC SEC

City of Seattle	NOT TO SCALE	STANDARD SYMBOLS PAVING

REV DATE: AUG 2013

ITEM	EXISTING	PROPOSED
Maintenance Holes		MH-7
Inlet Type 250A		
Inlet Type 250B		
Inlet Type 252		
Inlet Type 268		
Catch Basin round inlet top		
Private CB & Inlet		
Catch Basin Type 151 (pre 1985)		
Catch Basin Type 240A	A	A
Catch Basin Type 240B	B	B
Catch Basin Type 240C	C	C
Catch Basin Type 240D	D	D
Catch Basin Type 241		
Catch Basin Type 242A		
Catch Basin Type 242B		
Junction Box Type 277A		
Junction Box Type 277B		
Area Drain		

REF STD SPEC SEC

City of Seattle

NOT TO SCALE

STANDARD SYMBOLS
SEWER & DRAINAGE

REV DATE: FEB 2014

ITEM	EXISTING	PROPOSED
Sand Box		
Clean Out		
Concrete Culvert	12″ CC	12″ CC
Pipe Sewer Combined <1'-0"Dia	8″ PS	8″ PS
Pipe Sewer Combined ≥1'-0"Dia	24″ PS	24″ PS
Side Sewer Combined	6″ SS	6″ SS
Pipe Sewer Sanitary <1'-0"Dia	8″ PSS	8″ PSS
Pipe Sewer Sanitary ≥1'-0"Dia	24″ PSS	24″ PSS
Side Sewer Sanitary	6″ SSS	6″ SSS
Pipe Storm Drain <1'-0"Dia	8″ PSD	8″ PSD
Pipe Storm Drain ≥1'-0"Dia	24″ PSD	24″ PSD

REF STD SPEC SEC

City of Seattle

NOT TO SCALE

STANDARD SYMBOLS
SEWER & DRAINAGE

REV DATE: DEC 2013

ITEM	EXISTING	PROPOSED
Service Drain	8″ SD	8″ SD
Inlet & CB Connection		8″
Open Ended Pipe	8″ PSD	8″ PSD
Ditch		
Stream		

REF STD SPEC SEC

City of Seattle

NOT TO SCALE

STANDARD SYMBOLS
SEWER & DRAINAGE

REV DATE: AUG 2013

ITEM	EXISTING	PROPOSED
Bench Mark (found or set)		
Brass Plug/Cap (found or set)		
Hub/Tack (found or set)		
Monument in Case (found or set)		
Conc. Mon. (found or set)		
Rebar/Cap, Pipe/Cap Rebar, Iron Pipe (found or set)		
Tack/Lead, Tack PK Nail, Spike (found or set)		
Bench Mark (not found)		
Brass Plug/Cap (not found)		
MIC. (not found)		
Conc. Mon. (not found)		
Rebar/Cap, Pipe/Cap Rebar, Iron Pipe (not found)		
Tack/Lead, Tack PK Nail, Spike (not found)		
Survey Shot Point		

REF STD SPEC SEC

City of Seattle	NOT TO SCALE	STANDARD SYMBOLS TOPOGRAPHIC & MISC

REV DATE: AUG 2013

ITEM	EXISTING	PROPOSED
Center Line	CL	
Monument Line	ML	
Survey Line	SL	
Right of Way Line		
Lot & Ownership Line		
Permanent Easement Line		
Temp Const Easement Line		
Vacated Street or Alley		
State Highway Limited Access Line	STATE LAL	
Building		
Chain Link Fence		
Wood Fence		
Guardrail		
Rock Facing		
Rock Facing		
Riprap		
Trees	16"TREE 16"TREE	PER DRAWINGS

REF STD SPEC SEC

City of Seattle

NOT TO SCALE

STANDARD SYMBOLS
TOPOGRAPHIC & MISC

REV DATE: FEB 2014

ITEM	EXISTING	PROPOSED
Shrub or Bush		
Ground, Grade Line		
Grade (arrow downhill)	5.6%	5.6%
Rail Road Tracks		
City Limits	CITY OF SEATTLE KING COUNTY	
Slope Line		SLOPE LINE
Contours	246	246
Slope Angle Horiz:Vert		H:V
Vertical Curve	V C	V C
Depression		
Stump		
Top of Cut Toe of Fill		TOP OF CUT TOE OF FILL
Dimension Line		
Match Line		
Test Hole & Number (test boring)	(TB) TH-7	(TB) TH-7
Bench Mark	BM	

REF STD SPEC SEC

City of Seattle	NOT TO SCALE	STANDARD SYMBOLS TOPOGRAPHIC & MISC

REV DATE: AUG 2013

ITEM	EXISTING	PROPOSED
Monitor Well	MW	
Street Name Sign		
US Mail Box	US	
Private Mail Box		
Bollard		
Posts		
Parking Meter & Pay Station		
Rectangular Casting		
Circular Casting		
Column		
Jersey Barrier & Eco Block		
Tree Pit		
North Arrow horizontal	N	
North Arrow vertical	N	

REF STD SPEC SEC

City of Seattle	NOT TO SCALE	STANDARD SYMBOLS TOPOGRAPHIC & MISC

REV DATE: AUG 2013

ITEM	EXISTING	PROPOSED
Telephone Cable (direct burial)	TCB	
Telephone Conduit	3"TCD	
Telephone Duct	12'X12"TD	
Telephone Enclosure	TEB	
Telephone Maintenance Hole	TEL VAULT	
Telephone Pole	TP	
Telephone Handhole	THH	
Television Cable (direct Burial)	TVCB	
Television Handhole	TVHH	
Telegraph Maintenance Hole	TELEG MH	
Steam Log	6"STM 14"X14"LOG	
Steam Vault	STEMV	
Gas Main	12"G	
Gas Valve		
Gas Meter	GM	
Gas Regulator	G REG	
Petroleum or Oil	OIL	
Abandon(ed)	2"ECD(ABAN)	2"ECD–ABAN

REF STD SPEC SEC

City of Seattle	NOT TO SCALE	STANDARD SYMBOLS PRIVATE UTILITIES

REV DATE: AUG 2013

ITEM	EXISTING	PROPOSED
Watermain <1'-0"Dia	8"W	8"W
Watermain ≥1'-0"Dia	24"W	36"W
11 1/4° Bend w/ Conc Blocking		8"–11 1/4°HBorVB
22 1/2° Bend		8"–22 1/2°HBorVB
45° Bend		8"–45°HBorVB
90° Bend		8"–90°HBorVB
Cross		8"X8"X6"X6"CR
Tee		8"X8"X6"T
Pipe Sleeve		
Plug w/ Conc Blocking		or
Hydrant		
Water Meter	WM	WM
Valve Box		
Gate Valve		4"GV W/VBOX
Gate Valve w/ Chamber		8"GV W/CH
Gate Valve w/ Vault Chamber		16"GV W/VCH
Reducer	8"W 4"W	8"X4"RED

REF STD SPEC SEC

City of Seattle	NOT TO SCALE	STANDARD SYMBOLS WATER

REV DATE: AUG 2013

ITEM	EXISTING	PROPOSED
Air Valve		
Blowoff		1½"BO
Fire Standpipe		
Water Test Station		
Water Chamber		
Sprinkler Head		
Irrigation Valve	IRRV	IRRV
Angle Valve		
Butterfly Valve		
Ball Valve		
Check Valve		
Cone Valve		
Globe Valve		
Needle Valve		
Plug Valve		
Resilient Seal Gate Valve		
Vertical Bend		
Concrete Blocking		
Pipe Sleeve		

REF STD SPEC SEC

City of Seattle	NOT TO SCALE	STANDARD SYMBOLS WATER

REV DATE: AUG 2013

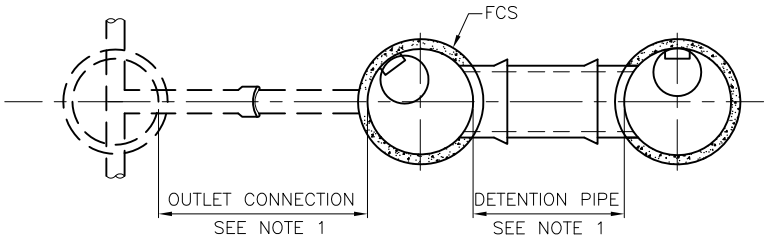

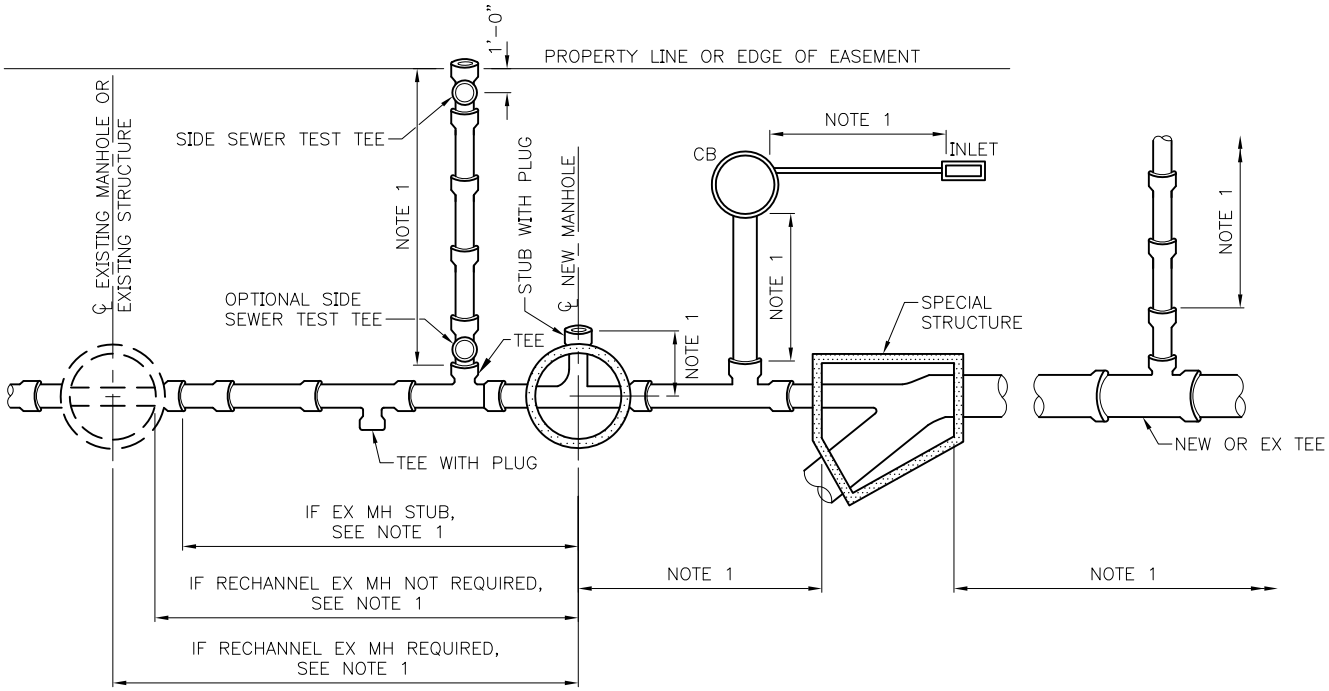

NOTES:

1. MEASUREMENT PER LINEAR FOOT. PIPE ENDING IN STRUCTURE MEASURED TO EITHER INSIDE FACE OR TO CENTERLINE OF STRUCTURE AS INDICATED, OR TO TEE OR WYE AS INDICATED.
2. TEE OR WYE INCLUDING PLUG – UNIT PRICE EACH
3. ALL PIPE SHALL BE MEASURED ON THE SLOPE ALONG THE CENTERLINE OF PIPE TO NEAREST 0.10 LF.

REF STD SPEC SEC 7

City of Seattle	NOT TO SCALE	SEWER/DRAINAGE MEASUREMENT DIAGRAM

REV DATE: MAR 2013

NOTES:

1. MONUMENT CASE TO BE INSTALLED BY CONTRACTOR.
2. BASE TO BE PLACED ON A WELL COMPACTED FOUNDATION.
3. FRAME AND COVER SHALL BE TESTED FOR ACCURACY OF FIT AND SHALL BE MARKED IN SETS FOR DELIVERY.
4. FRAME AND COVER SHALL BE CAST IRON AND HAVE COATING APPLIED TO ALL FACES.
5. CASTINGS IN RIGID PAVEMENT SHALL HAVE REINFORCING STEEL IN THE PAVEMENT.
6. USE LOCKING COVER IN R/W. DRILL AND TAP, APPLY ANTI-SEIZE COATING AND BOLT DOWN WITH ⅜"S.S. ALLEN-HEAD BOLTS -2 PLACES.

RISER RING DIMENSIONS			
A (SIZE)	1½"	2"	3"

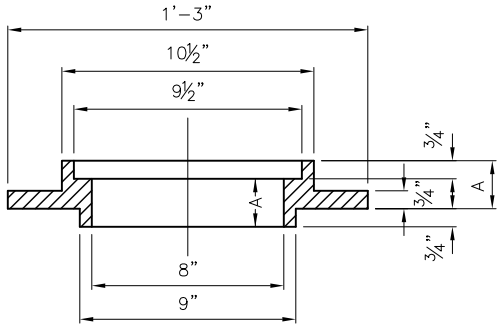

RISER RING SECTION

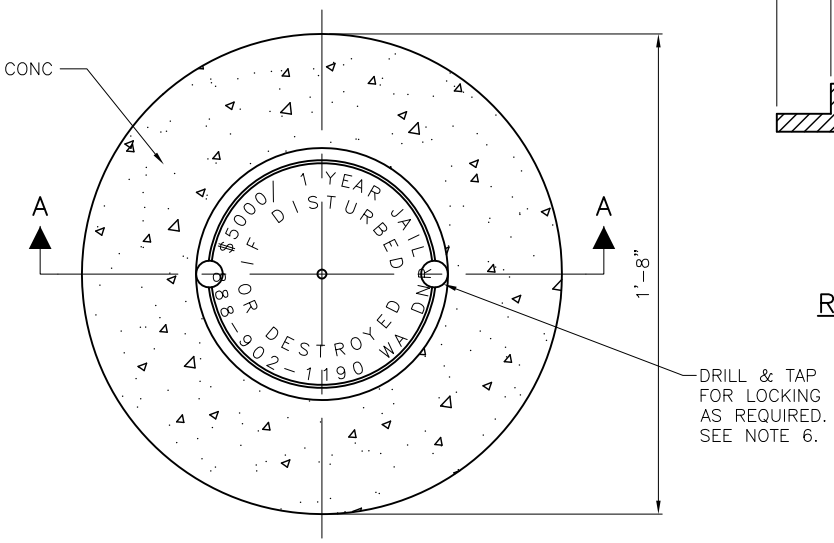

PLAN

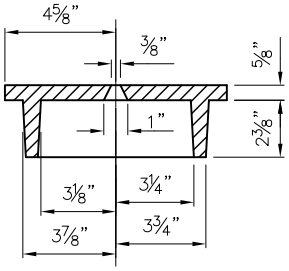

COVER SECTION

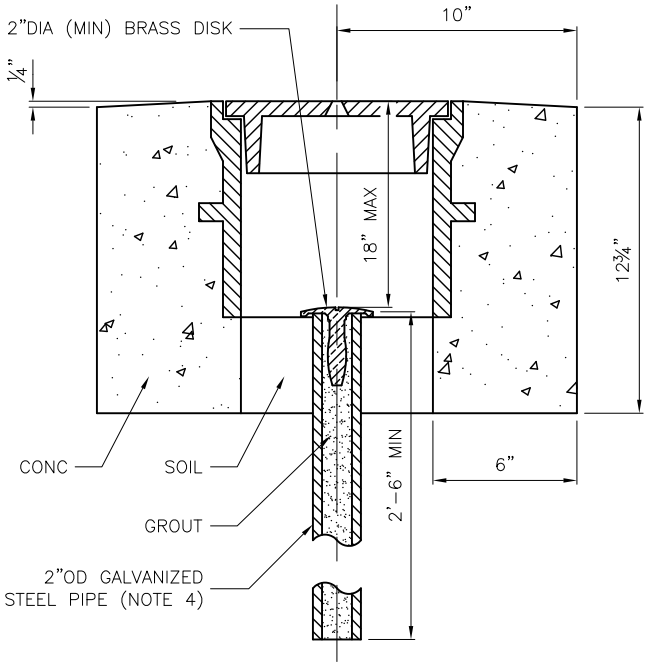

SECTION A-A

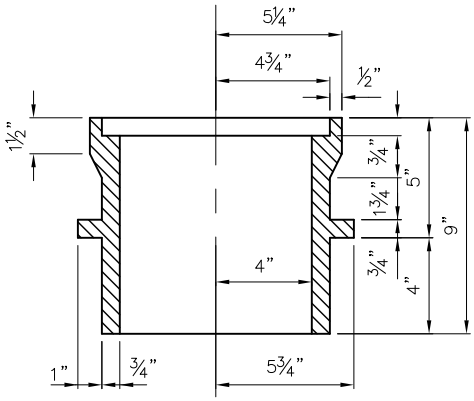

CASE SECTION

REF STD SPEC SEC 8-13

City of Seattle	NOT TO SCALE	MONUMENT FRAME & COVER

REV DATE: DEC 2013

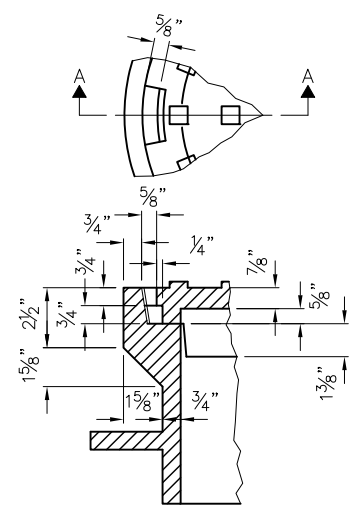

SECTION A–A

NOTES:

1. FRAME AND COVER SHALL BE TESTED FOR ACCURACY OF FIT AND SHALL BE MARKED IN SETS FOR DELIVERY
2. FRAME AND COVER SHALL BE CAST IRON
3. "f"=FINISH
4. CASTINGS IN RIGID PAVEMENT SHALL HAVE REINFORCING STEEL IN THE PAVEMENT.

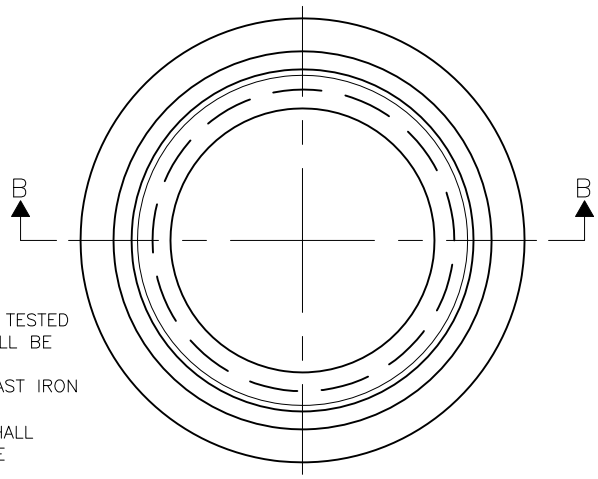

TOP VIEW

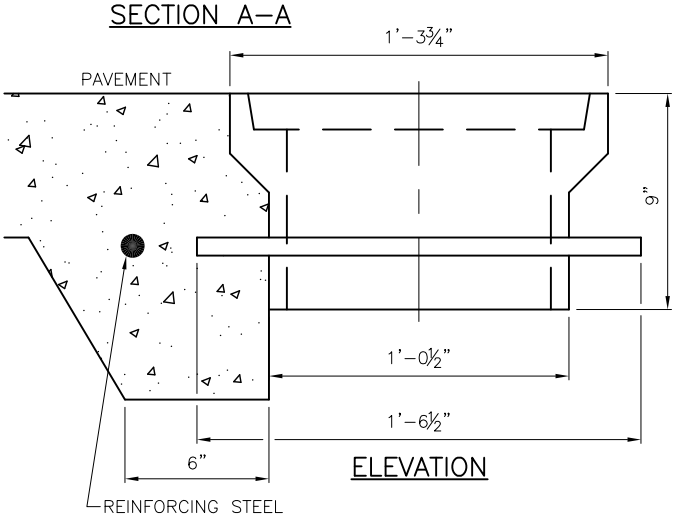

ELEVATION

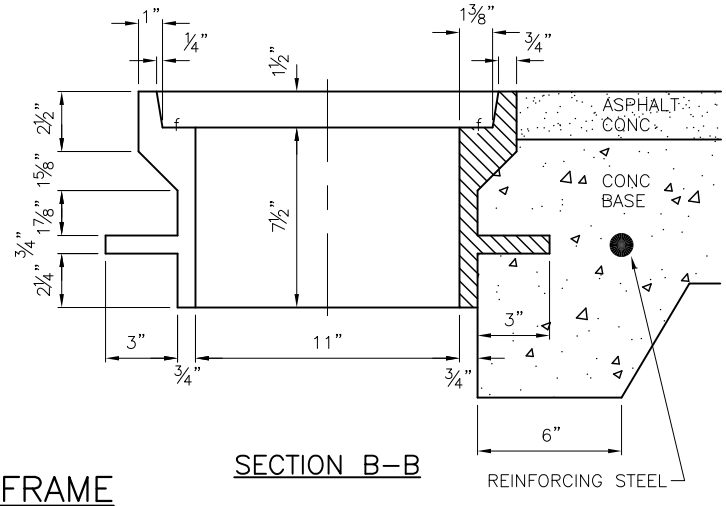

SECTION B–B

FRAME

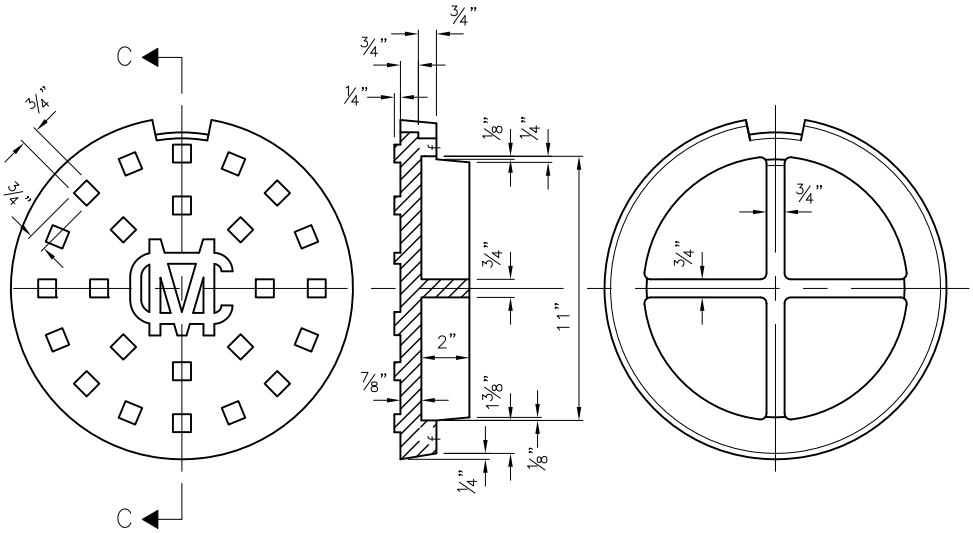

TOP VIEW SECTION C–C BOTTOM VIEW

COVER

REF STD SPEC SEC 8-13

City of Seattle	NOT TO SCALE	MONUMENT FRAME & COVER

REV DATE: SEPT 2013

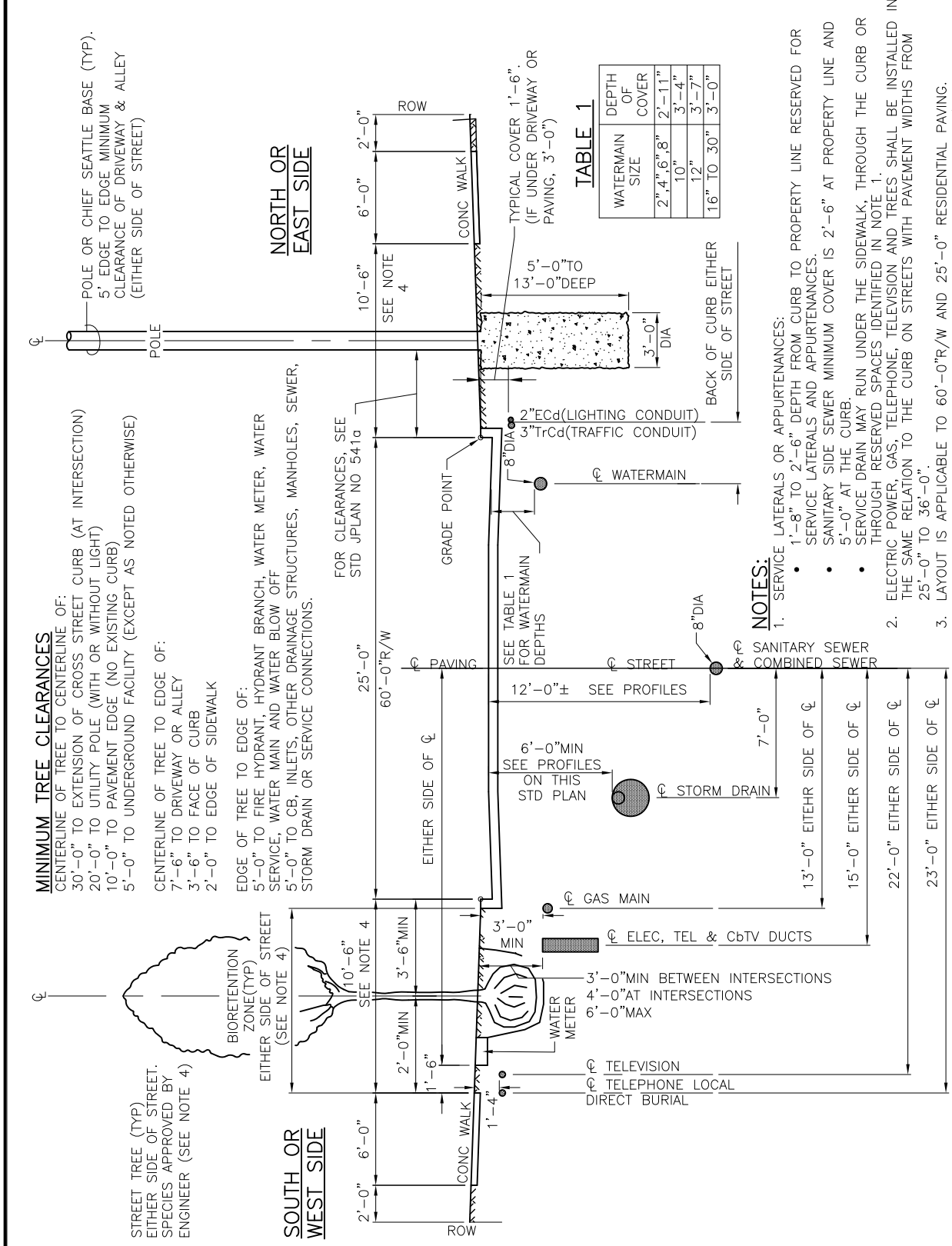

MINIMUM TREE CLEARANCES

CENTERLINE OF TREE TO CENTERLINE OF:
30'-0" TO EXTENSION OF CROSS STREET CURB (AT INTERSECTION)
20'-0" TO UTILITY POLE (WITH OR WITHOUT LIGHT)
10'-0" TO PAVEMENT EDGE (NO EXISTING CURB)
5'-0" TO UNDERGROUND FACILITY (EXCEPT AS NOTED OTHERWISE)

CENTERLINE OF TREE TO EDGE OF:
7'-6" TO DRIVEWAY OR ALLEY
3'-6" TO FACE OF CURB
2'-0" TO EDGE OF SIDEWALK

EDGE OF TREE TO EDGE OF:
5'-0" TO FIRE HYDRANT, HYDRANT BRANCH, WATER METER, WATER SERVICE, WATER MAIN AND WATER BLOW OFF
5'-0" TO CB, INLETS, OTHER DRAINAGE STRUCTURES, MANHOLES, SEWER, STORM DRAIN OR SERVICE CONNECTIONS.

TABLE 1

WATERMAIN SIZE	DEPTH OF COVER
2",4",6",8"	2'-11"
10"	3'-4"
12"	3'-7"
16" TO 30"	3'-0"

NOTES:

1. SERVICE LATERALS OR APPURTENANCES:
   - 1'-8" TO 2'-6" DEPTH FROM CURB TO PROPERTY LINE RESERVED FOR SERVICE LATERALS AND APPURTENANCES.
   - SANITARY SIDE SEWER MINIMUM COVER IS 2'-6" AT PROPERTY LINE AND 5'-0" AT THE CURB.
   - SERVICE DRAIN MAY RUN UNDER THE SIDEWALK, THROUGH THE CURB OR THROUGH RESERVED SPACES IDENTIFIED IN NOTE 1.
2. ELECTRIC POWER, GAS, TELEPHONE, TELEVISION AND TREES SHALL BE INSTALLED IN THE SAME RELATION TO THE CURB ON STREETS WITH PAVEMENT WIDTHS FROM 25'-0" TO 36'-0".
3. LAYOUT IS APPLICABLE TO 60'-0"R/W AND 25'-0" RESIDENTIAL PAVING.
4. REDUCING CLEARANCE BETWEEN A NEW UTILITY AND EXISTING TREE/PLANTING STRIP, REDUCING CLEARANCE BETWEEN A NEW/REPLACEMENT TREE AND EXISTING UTILITY, INCORPORATING GSI (BIORETENTION) INTO PLANTER STRIP OR CURB EXTENSION OR CHANGING THE 10'-6" WIDTH OF PLANTING STRIP REQUIRES REVIEW AND APPROVAL OF THE ENGINEER AND MAY REQUIRE ADDITIONAL MITIGATING MEASURES.
5. BACKFILL OVER ALL UTILITY INSTALLATIONS BETWEEN BACK OF CURB AND R/W AND WITHIN 5' OF CENTERLINE OF TREES SHALL BE PLANTING SOIL FOR A MINIMUM DEPTH EQUAL TO THE DEPTH OF THE ROOTBALL (NO CDF ALLOWED IN THIS ZONE).

REF STD SPEC SEC 1-07.16, 1-07.17 & 1-07.28

City of Seattle	NOT TO SCALE	DESIRABLE LOCATIONS FOR UTILITIES (RESIDENTIAL STREET)

REV DATE: JUN 2010

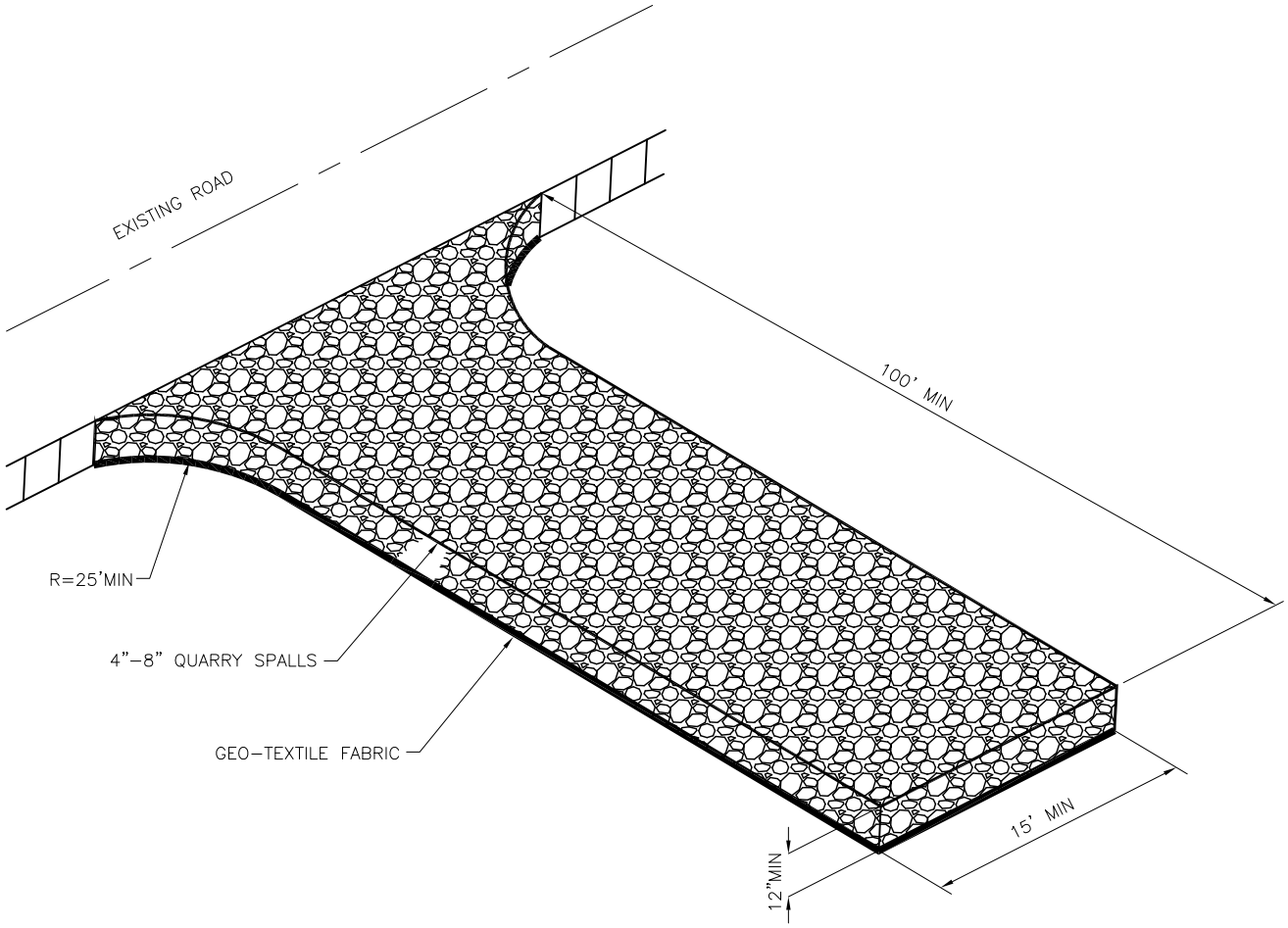

NOTES:

1. STABILIZED ACCESS SHALL BE USED IN ALL AREAS OF THE SITE WITH VEHICLE TRAFFIC AND PARKING, INCLUDING PLANTING STRIPS.
2. SEE SECTION 9–37.2 (TABLE 3) FOR GEOTEXTILE REQUIREMENTS. GEOTEXTILE MODIFICATIONS BASED ON SPECIFIC PROJECT SITE CONDITIONS MAY BE APPROVED BY THE ENGINEER.

REF STD SPEC SEC 8-01

City of Seattle	NOT TO SCALE	STABILIZED CONSTRUCTION ENTRANCE