REV DATE: DEC 2013

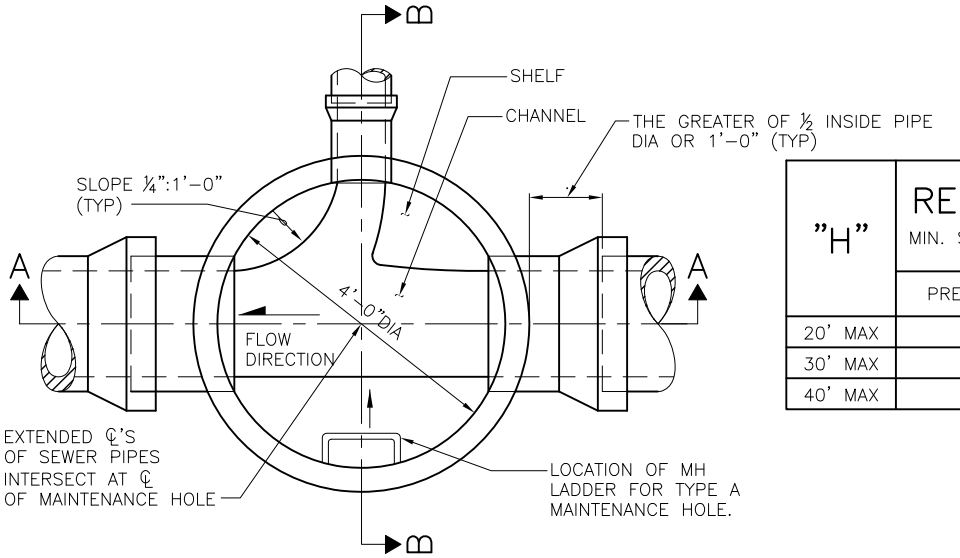

PLAN VIEW
(TOP REMOVED)

"H"	REINFORCING STEEL "A" MIN. SQ IN/FT, TOP FACE, IN EACH DIRECTION	
	PRECAST BASE	CAST–IN–PLACE BASE
20' MAX	0.25	0.17
30' MAX	0.31	0.22
40' MAX	0.36	0.25

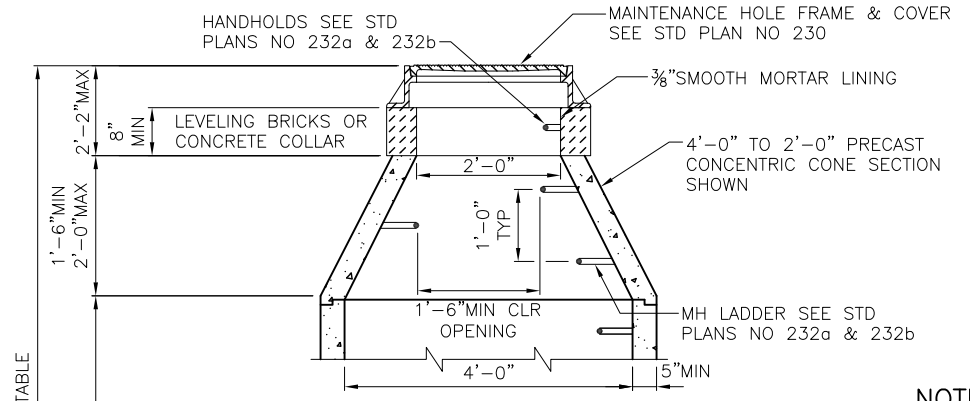

SECTION B–B

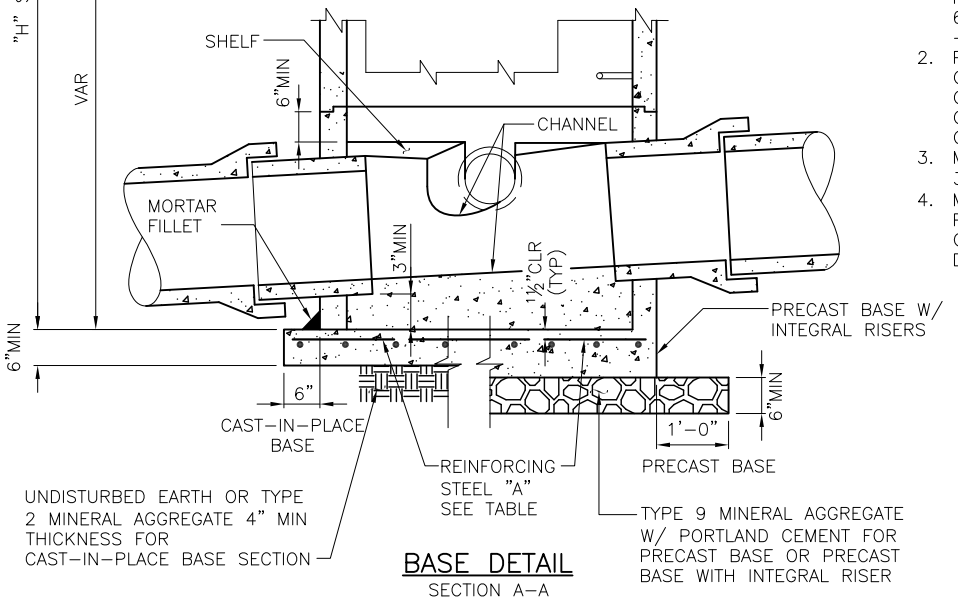

BASE DETAIL
SECTION A–A

NOTES:

1. MATERIALS: CONCRETE–CLASS 4000; REINFORCING STEEL–ASTM A615 GRADE 60 MIN; CHANNEL AND SHELF MATERIAL – CONCRETE CLASS 3000.
2. PRECAST MAINTENANCE HOLE COMPONENTS SHALL CONFORM TO ASTM C 478. JOINTS BETWEEN PRECAST COMPONENTS SHALL BE RUBBER GASKETED CONFORMING TO ASTM C 443.
3. MINIMUM REQUIRED SOIL BEARING = 3,000 LBS/SQ FT
4. MAX HOLE SIZE SHALL BE OD OF PIPE PLUS 5 IN. MIN HOLE SIZE SHALL BE OD OF PIPE PLUS 3 IN. MIN CLEAR DISTANCE BETWEEN HOLES IS 8 IN.

REF STD SPEC SEC 7-05

City of Seattle	NOT TO SCALE	TYPE 204a MAINTENANCE HOLE

REV DATE: SEP 2013

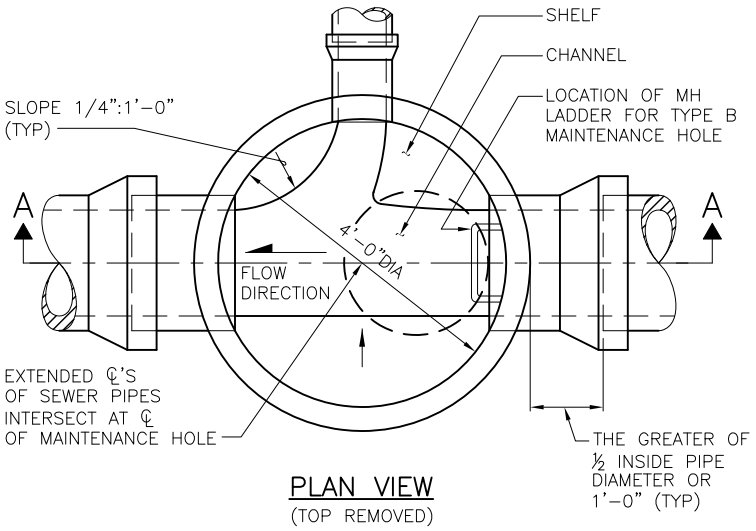

PLAN VIEW
(TOP REMOVED)

"H"	REINFORCING STEEL "A" MIN. SQ IN/FT, TOP FACE, IN EACH DIRECTION	
	PRECAST BASE	CAST-IN-PLACE BASE
20' MAX	0.25	0.17
30' MAX	0.31	0.22
40' MAX	0.36	0.25

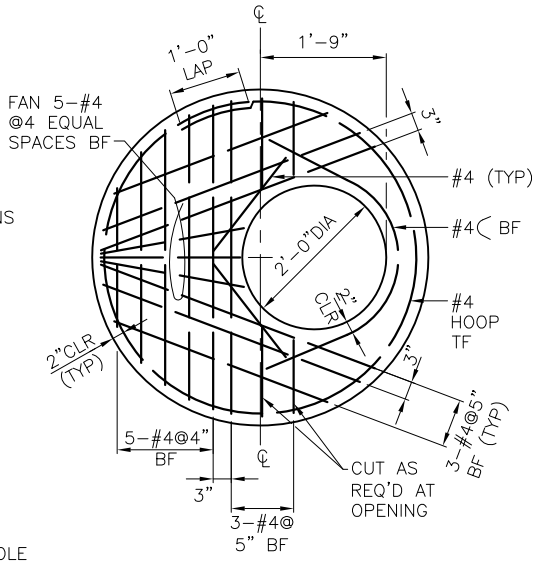

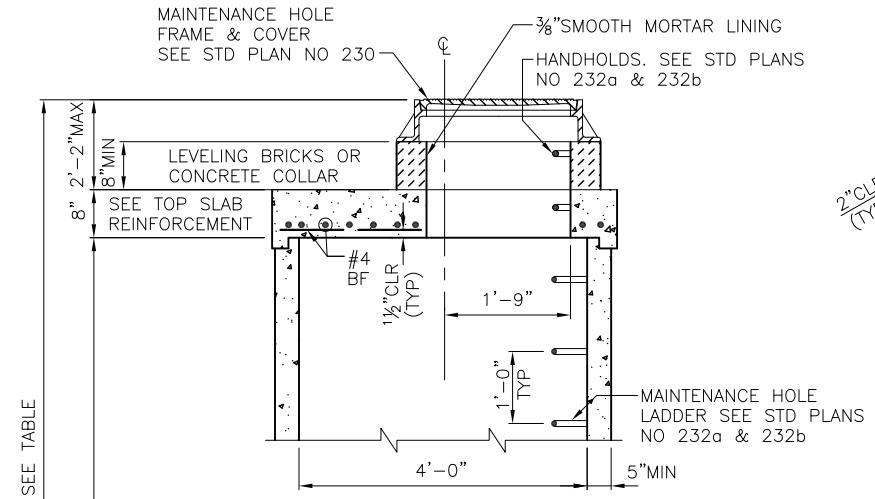

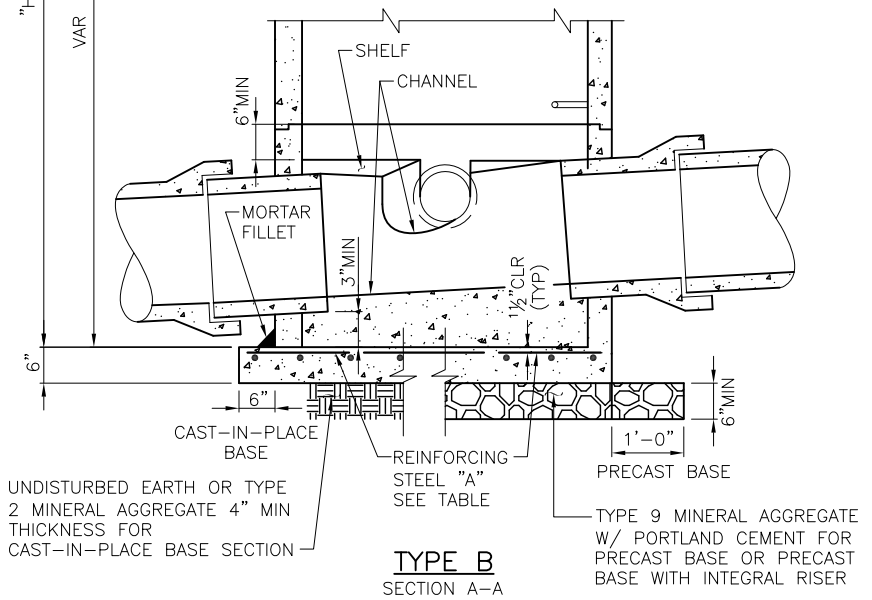

TYPE B
SECTION A-A

NOTES:

1. MATERIALS: CONCRETE-CLASS 4000; REINFORCING STEEL-ASTM A615 GRADE 60 MIN; CHANNEL AND SHELF MATERIAL - CONCRETE CLASS 3000.
2. PRECAST MAINTENANCE HOLE COMPONENTS SHALL CONFORM TO ASTM C 478. JOINTS BETWEEN PRECAST COMPONENTS SHALL BE RUBBER GASKETED CONFORMING TO ASTM C 443.
3. MINIMUM REQUIRED SOIL BEARING = 3,000 LBS/SQ FT
4. MAX HOLE SIZE SHALL BE OD OF PIPE PLUS 5 IN. MIN HOLE SIZE SHALL BE OD OF PIPE PLUS 3 IN. MIN CLEAR DISTANCE BETWEEN HOLES IS 8 IN.

REF STD SPEC SEC 7-05

City of Seattle	NOT TO SCALE	TYPE 204b MAINTENANCE HOLE

REV DATE: DEC 2013

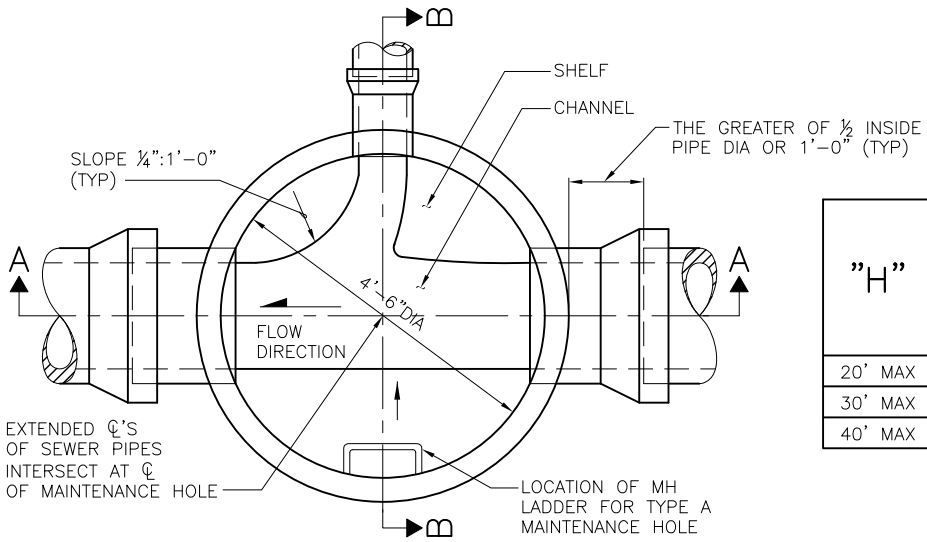

PLAN VIEW
(TOP REMOVED)

"H"	REINFORCING STEEL "A" MIN. SQ IN/FT, TOP FACE, IN EACH DIRECTION	
	PRECAST BASE	CAST–IN–PLACE BASE
20' MAX	0.29	0.21
30' MAX	0.36	0.26
40' MAX	0.42	0.31

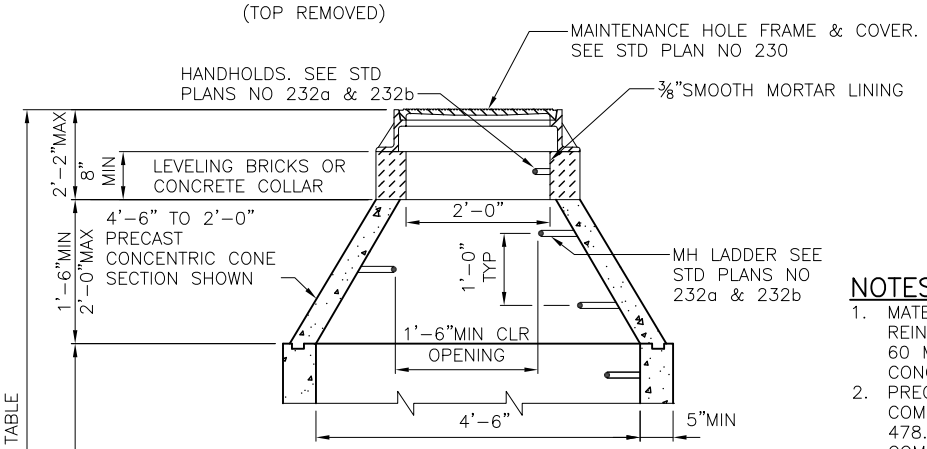

SECTION B–B

NOTES:

1. MATERIALS: CONCRETE–CLASS 4000; REINFORCING STEEL–ASTM A615 GRADE 60 MIN; CHANNEL AND SHELF MATERIAL – CONCRETE CLASS 3000.
2. PRECAST MAINTENANCE HOLE COMPONENTS SHALL CONFORM TO ASTM C 478. JOINTS BETWEEN PRECAST COMPONENTS SHALL BE RUBBER GASKETED CONFORMING TO ASTM C 443.
3. MINIMUM REQUIRED SOIL BEARING = 3,000 LBS/SQ FT
4. MAX HOLE SIZE SHALL BE OD OF PIPE PLUS 6 IN. MIN HOLE SIZE SHALL BE OD OF PIPE PLUS 3 IN. MIN CLEAR DISTANCE BETWEEN HOLES IS 8 IN.

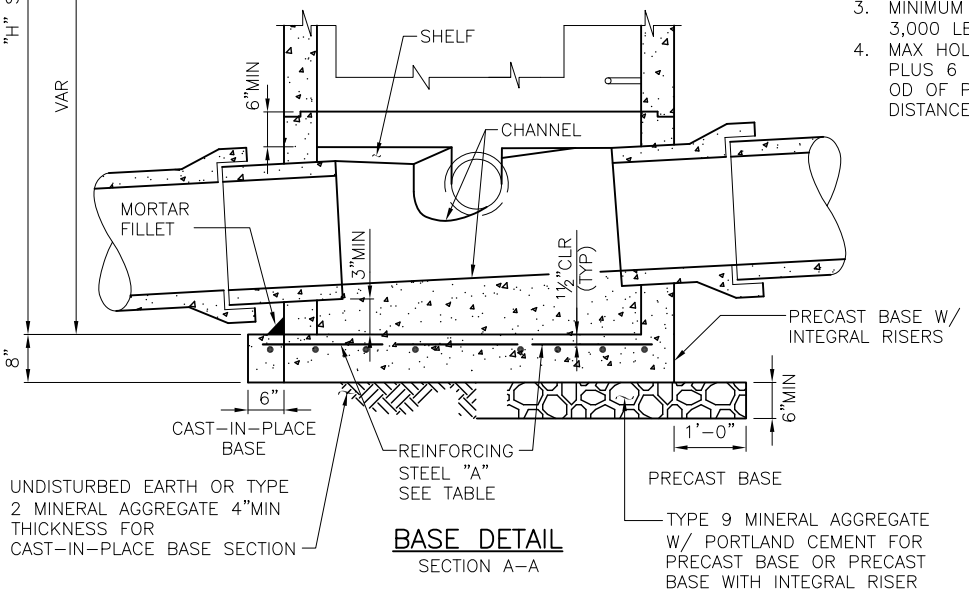

BASE DETAIL
SECTION A–A

REF STD SPEC SEC 7-05

City of Seattle	NOT TO SCALE	TYPE 204.5a MAINTENANCE HOLE

REV DATE: DEC 2013

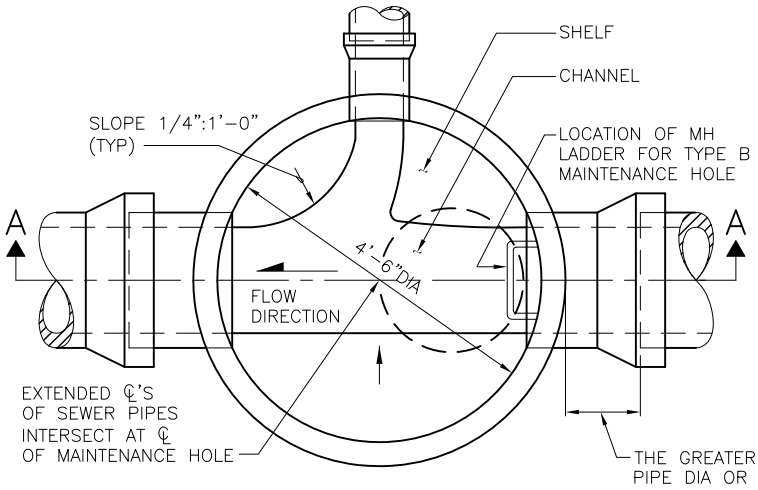

PLAN VIEW
(TOP REMOVED)

"H"	REINFORCING STEEL "A" MIN. SQ IN/FT, TOP FACE, IN EACH DIRECTION	
	PRECAST BASE	CAST-IN-PLACE BASE
20' MAX	0.29	0.21
30' MAX	0.36	0.26
40' MAX	0.42	0.31

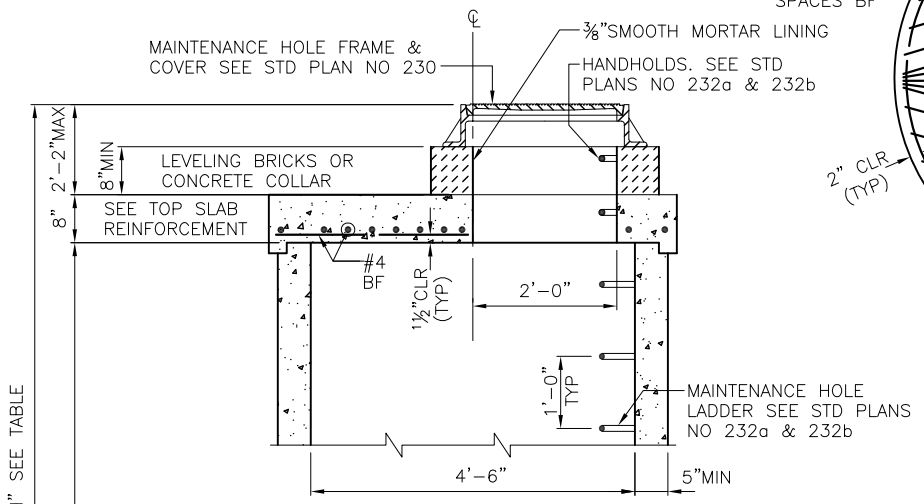

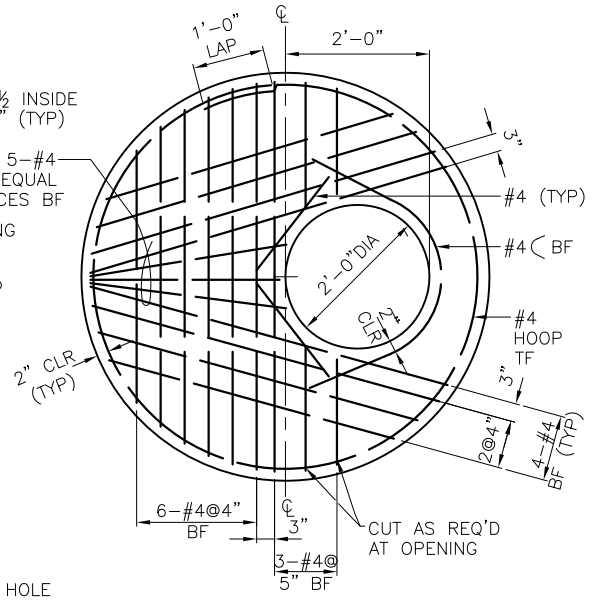

TOP SLAB REINFORCEMENT

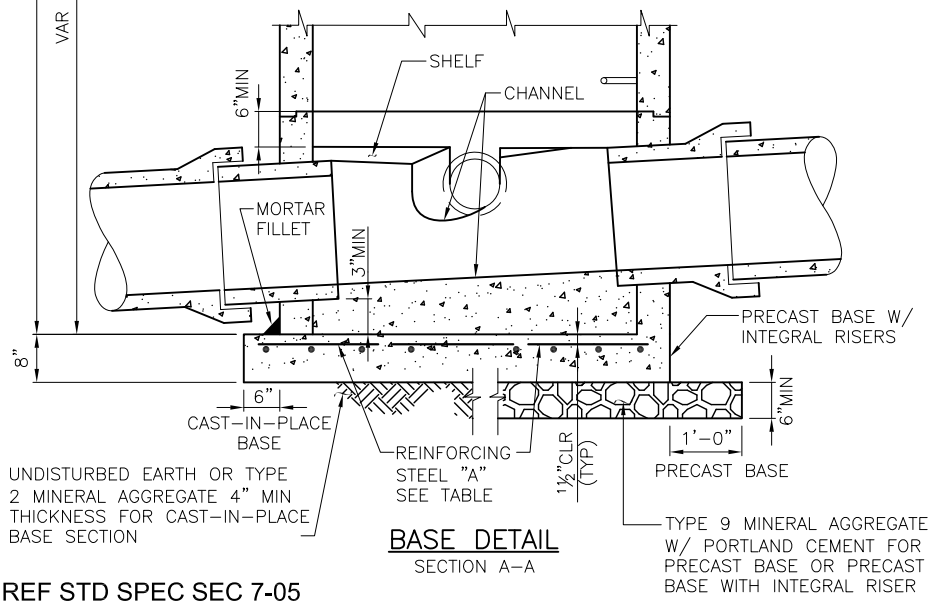

BASE DETAIL
SECTION A-A

NOTES:

1. MATERIALS: CONCRETE-CLASS 4000; REINFORCING STEEL-ASTM A615 GRADE 60 MIN; CHANNEL AND SHELF MATERIAL - CONCRETE CLASS 3000.
2. PRECAST MAINTENANCE HOLE COMPONENTS SHALL CONFORM TO ASTM C 478. JOINTS BETWEEN PRECAST COMPONENTS SHALL BE RUBBER GASKETED CONFORMING TO ASTM C 443.
3. MINIMUM REQUIRED SOIL BEARING = 3,000 LBS/SQ FT
4. MAX HOLE SIZE SHALL BE OD OF PIPE PLUS 6 IN. MIN HOLE SIZE SHALL BE OD OF PIPE PLUS 3 IN. MIN CLEAR DISTANCE BETWEEN HOLES IS 8 IN.

REF STD SPEC SEC 7-05

City of Seattle	NOT TO SCALE	TYPE 204.5b MAINTENANCE HOLE

REV DATE: APR 2013

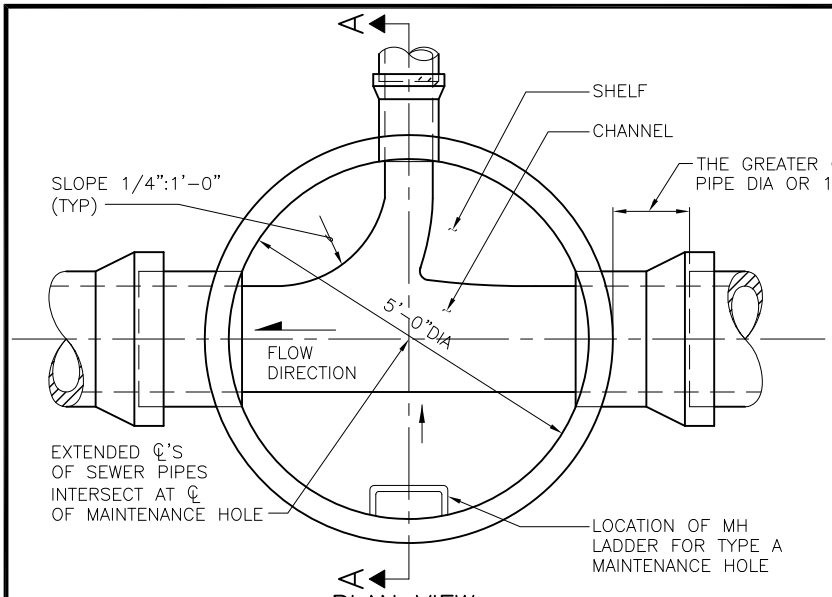

PLAN VIEW
(TOP REMOVED)

"H"	REINFORCING STEEL "A" MIN. SQ IN/FT, TOP FACE, IN EACH DIRECTION	
	PRECAST BASE	CAST–IN–PLACE BASE
20' MAX	0.33	0.25
30' MAX	0.41	0.31
40' MAX	0.49	0.37

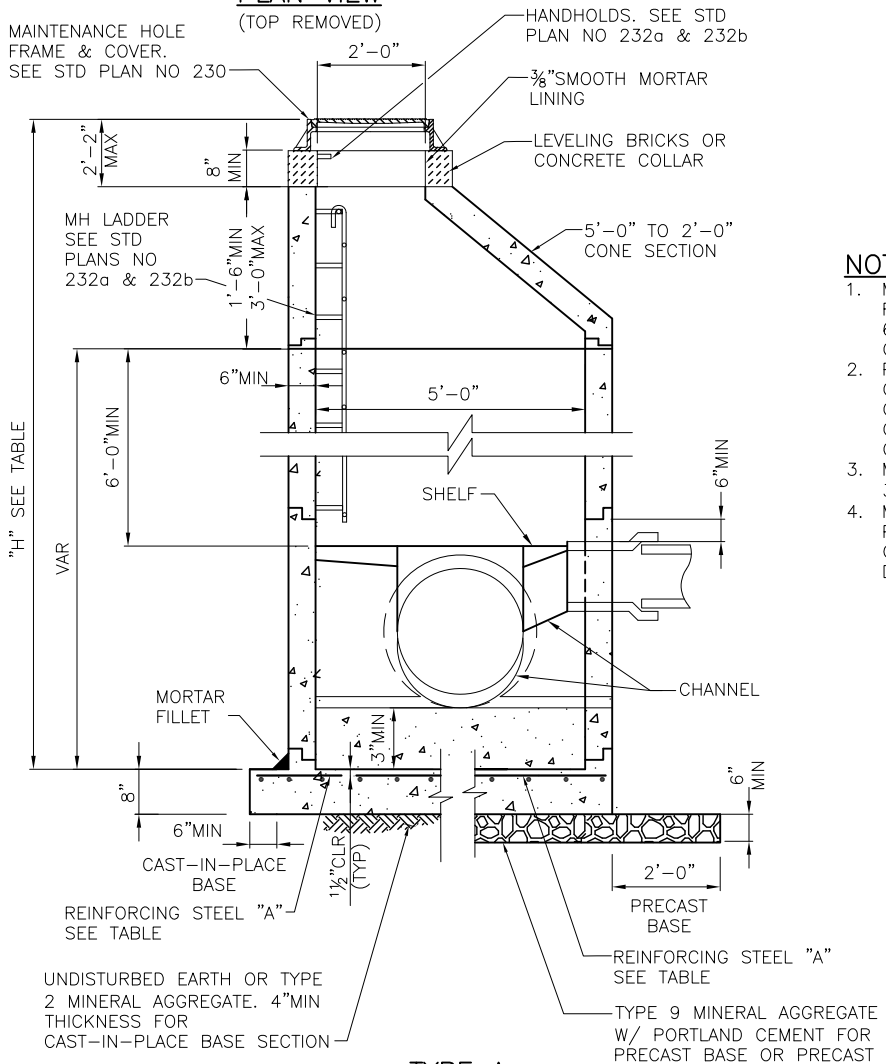

TYPE A
SECTION A–A

NOTES:

1. MATERIALS: CONCRETE–CLASS 4000; REINFORCING STEEL–ASTM A615 GRADE 60 MIN; CHANNEL AND SHELF MATERIAL – CONCRETE CLASS 3000.
2. PRECAST MAINTENANCE HOLE COMPONENTS SHALL CONFORM TO ASTM C 478. JOINTS BETWEEN PRECAST COMPONENTS SHALL BE RUBBER GASKETED CONFORMING TO ASTM C 443.
3. MINIMUM REQUIRED SOIL BEARING = 3,000 LBS/SQ FT
4. MAX HOLE SIZE SHALL BE OD OF PIPE PLUS 6 IN. MIN HOLE SIZE SHALL BE OD OF PIPE PLUS 3 IN. MIN CLEAR DISTANCE BETWEEN HOLES IS 8 IN.

REF STD SPEC SEC 7-05

City of Seattle	NOT TO SCALE	TYPE 205a MAINTENANCE HOLE

REV DATE: SEP 2013

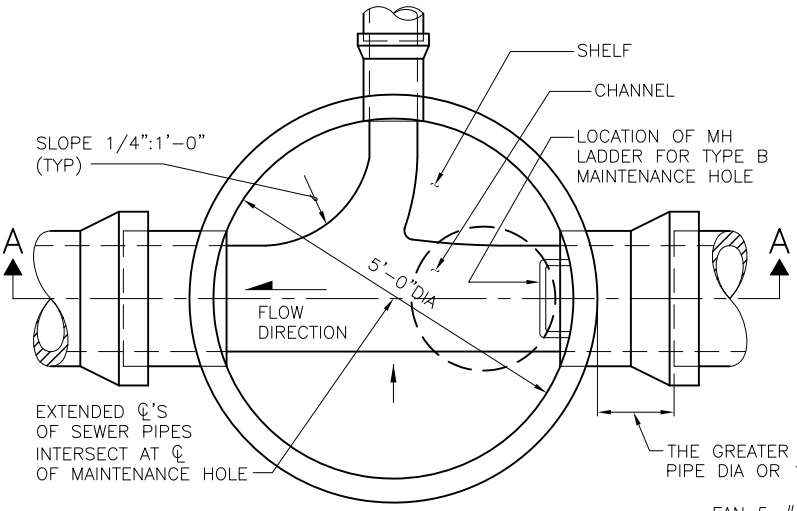

PLAN VIEW
(TOP REMOVED)

"H"	REINFORCING STEEL "A" MIN. SQ IN/FT, TOP FACE, IN EACH DIRECTION	
	PRECAST BASE	CAST-IN-PLACE BASE
20' MAX	0.33	0.25
30' MAX	0.41	0.31
40' MAX	0.49	0.37

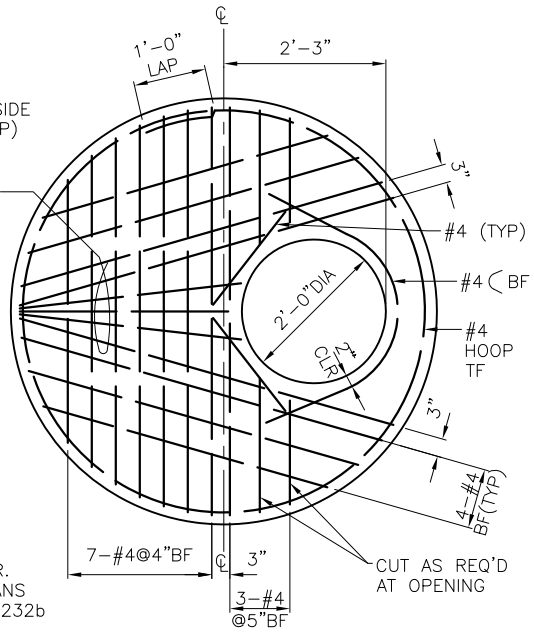

TOP SLAB REINFORCEMENT

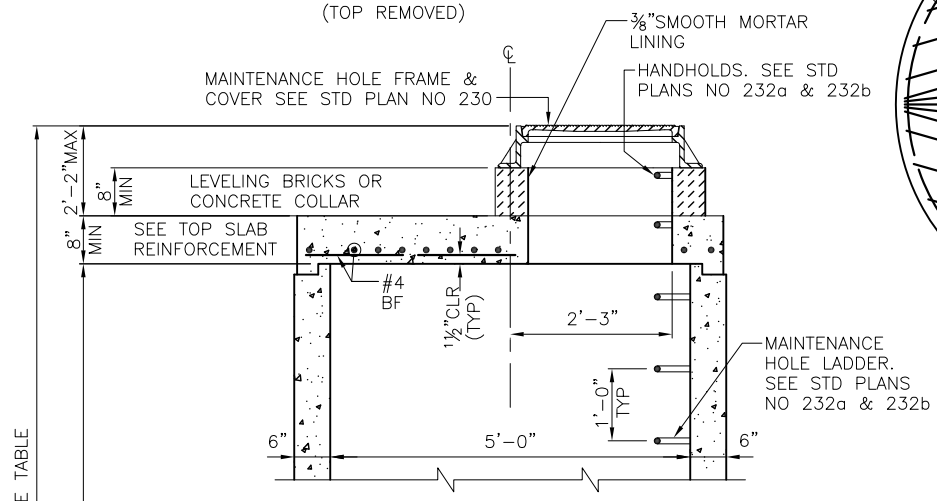

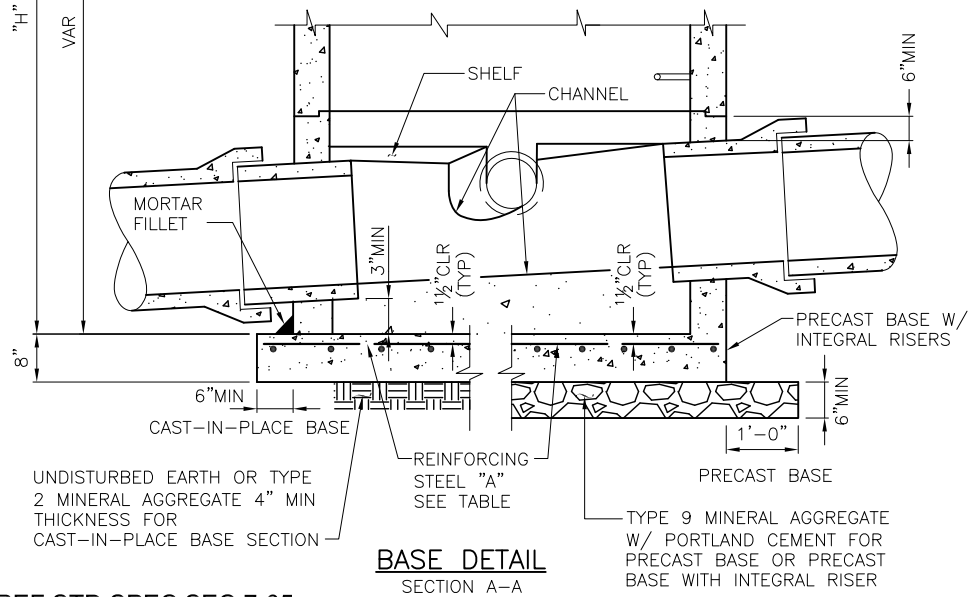

BASE DETAIL
SECTION A-A

NOTES:

1. MATERIALS: CONCRETE-CLASS 4000; REINFORCING STEEL-ASTM A615 GRADE 60 MIN; CHANNEL AND SHELF MATERIAL - CONCRETE CLASS 3000.
2. PRECAST MAINTENANCE HOLE COMPONENTS SHALL CONFORM TO ASTM C 478. JOINTS BETWEEN PRECAST COMPONENTS SHALL BE RUBBER GASKETED CONFORMING TO ASTM C 443.
3. MINIMUM REQUIRED SOIL BEARING = 3,000 LBS/SQ FT
4. MAX HOLE SIZE SHALL BE OD OF PIPE PLUS 6 IN. MIN HOLE SIZE SHALL BE OD OF PIPE PLUS 3 IN. MIN CLEAR DISTANCE BETWEEN HOLES IS 8 IN.

REF STD SPEC SEC 7-05

City of Seattle	NOT TO SCALE	TYPE 205b MAINTENANCE HOLE

REV DATE: DEC 2013

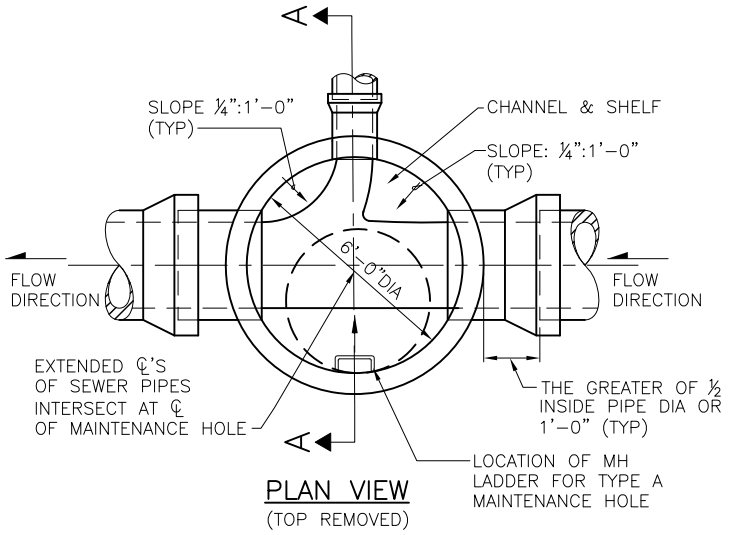

PLAN VIEW
(TOP REMOVED)

"H"	REINFORCING STEEL "A" MIN. SQ IN/FT, TOP FACE, IN EACH DIRECTION	
	PRECAST BASE	CAST–IN–PLACE BASE
20' MAX	0.39	0.30
30' MAX	0.47	0.37
40' MAX	0.56	0.46

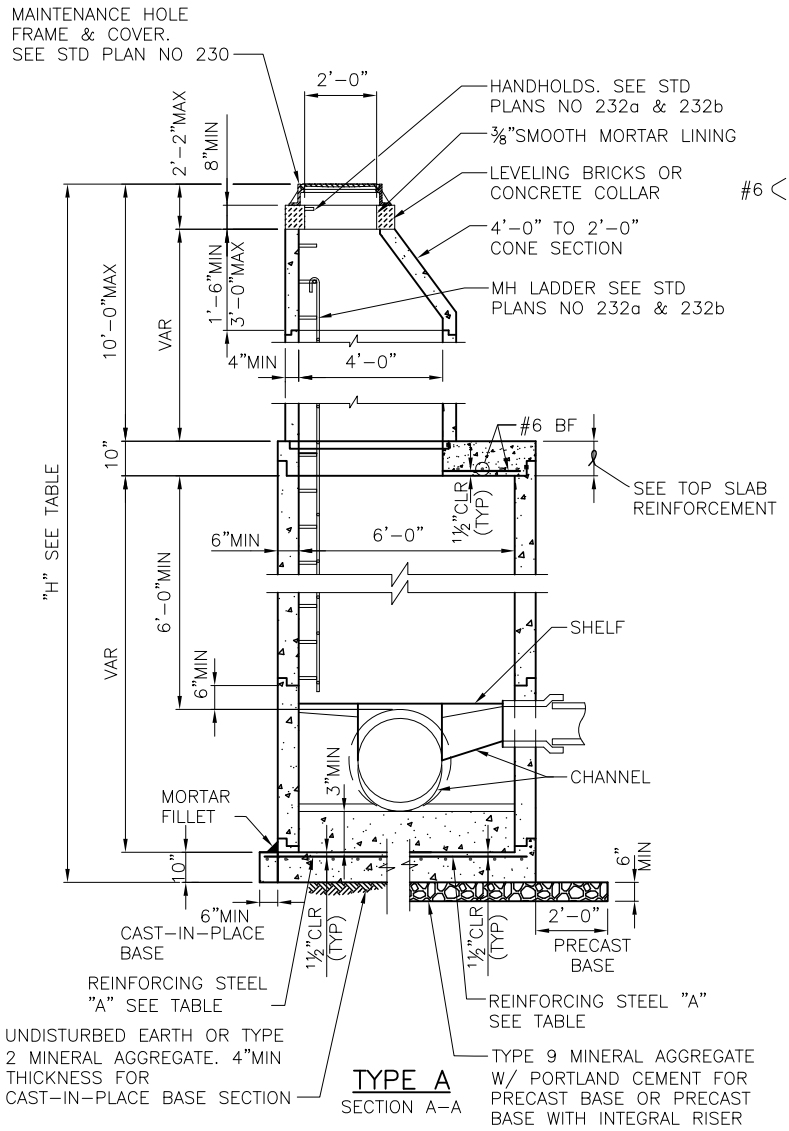

TYPE A
SECTION A–A

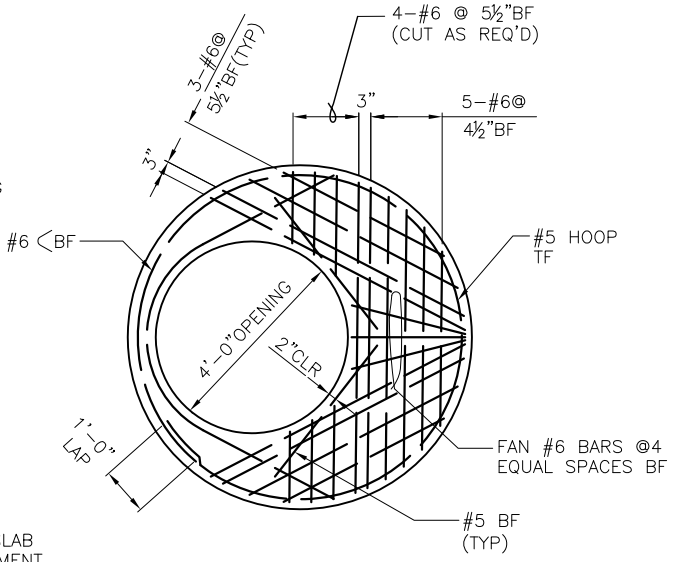

TOP SLAB REINFORCEMENT

NOTES:

1. MATERIALS: CONCRETE–CLASS 4000; REINFORCING STEEL–ASTM A615 GRADE 60 MIN; CHANNEL AND SHELF MATERIAL – CONCRETE CLASS 3000.
2. PRECAST MAINTENANCE HOLE COMPONENTS SHALL CONFORM TO ASTM C 478. JOINTS BETWEEN PRECAST COMPONENTS SHALL BE RUBBER GASKETED CONFORMING TO ASTM C 443.
3. MINIMUM REQUIRED SOIL BEARING = 3,000 LBS/SQ FT
4. MAX HOLE SIZE SHALL BE OD OF PIPE PLUS 7 IN. MIN HOLE SIZE SHALL BE OD OF PIPE PLUS 3 IN. MIN CLEAR DISTANCE BETWEEN HOLES IS 12 IN.

REF STD SPEC SEC 7-05

City of Seattle	NOT TO SCALE	TYPE 206a MAINTENANCE HOLE

REV DATE: DEC 2013

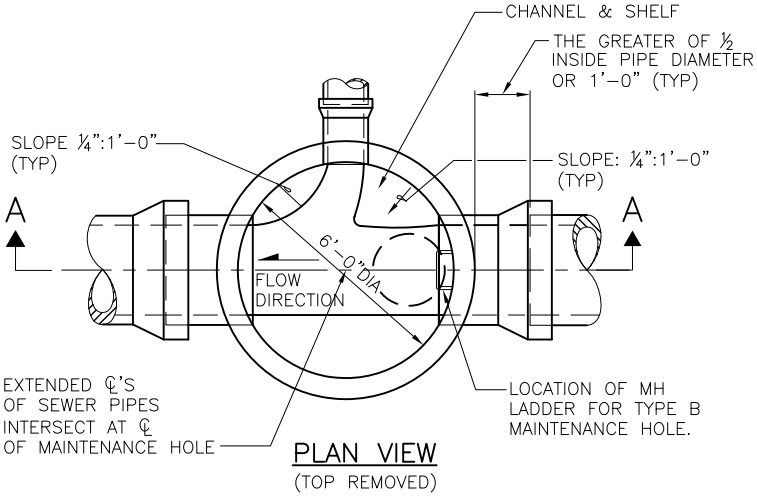

PLAN VIEW
(TOP REMOVED)

"H"	REINFORCING STEEL "A" MIN. SQ IN/FT, TOP FACE, IN EACH DIRECTION	
	PRECAST BASE	CAST–IN–PLACE BASE
20' MAX	0.29	0.24
30' MAX	0.41	0.32
40' MAX	0.49	0.41

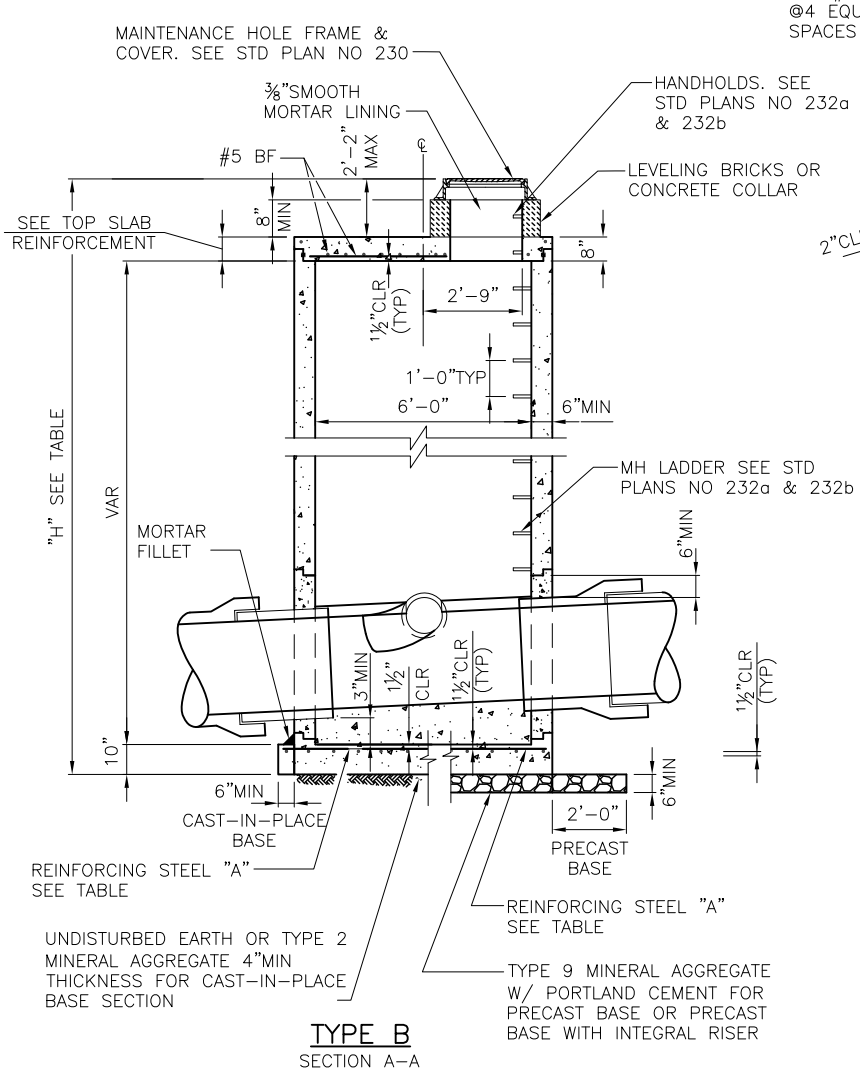

TYPE B
SECTION A–A

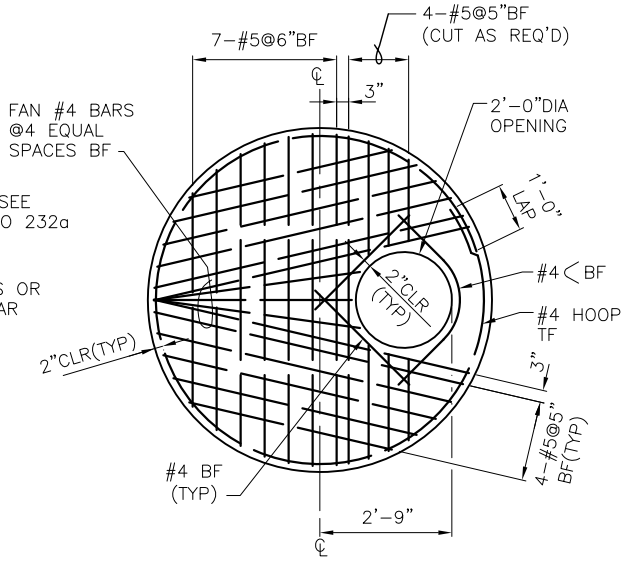

TOP SLAB REINFORCEMENT

NOTES:

1. MATERIALS: CONCRETE–CLASS 4000; REINFORCING STEEL–ASTM A615 GRADE 60 MIN; CHANNEL AND SHELF MATERIAL – CONCRETE CLASS 3000.
2. PRECAST MAINTENANCE HOLE COMPONENTS SHALL CONFORM TO ASTM C 478. JOINTS BETWEEN PRECAST COMPONENTS SHALL BE RUBBER GASKETED CONFORMING TO ASTM C 443.
3. MINIMUM REQUIRED SOIL BEARING = 3,000 LBS/SQ FT
4. MAX HOLE SIZE SHALL BE OD OF PIPE PLUS 7 IN. MIN HOLE SIZE SHALL BE OD OF PIPE PLUS 3 IN. MIN CLEAR DISTANCE BETWEEN HOLES IS 12 IN.

REF STD SPEC SEC 7-05

City of Seattle	NOT TO SCALE	TYPE 206b MAINTENANCE HOLE

REV DATE: SEP 2013

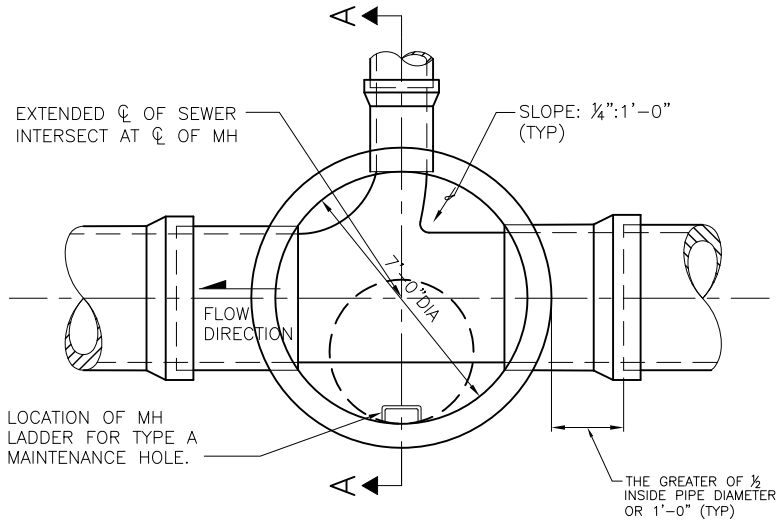

PLAN VIEW
(TOP REMOVED)

"H"	REINFORCING STEEL "A" MIN. SQ IN/FT, TOP FACE, IN EACH DIRECTION	
	PRECAST BASE	CAST–IN–PLACE BASE
20' MAX	0.42	034
30' MAX	0.51	0.41
40' MAX	0.60	0.48

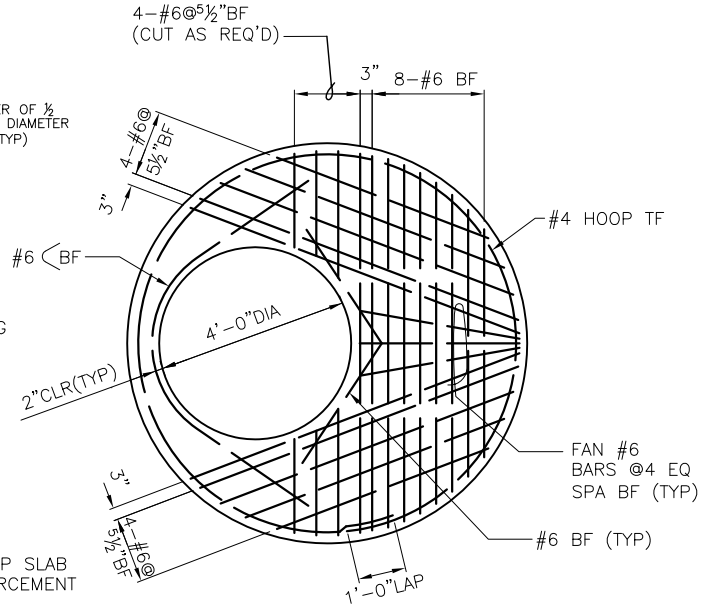

TOP SLAB REINFORCEMENT

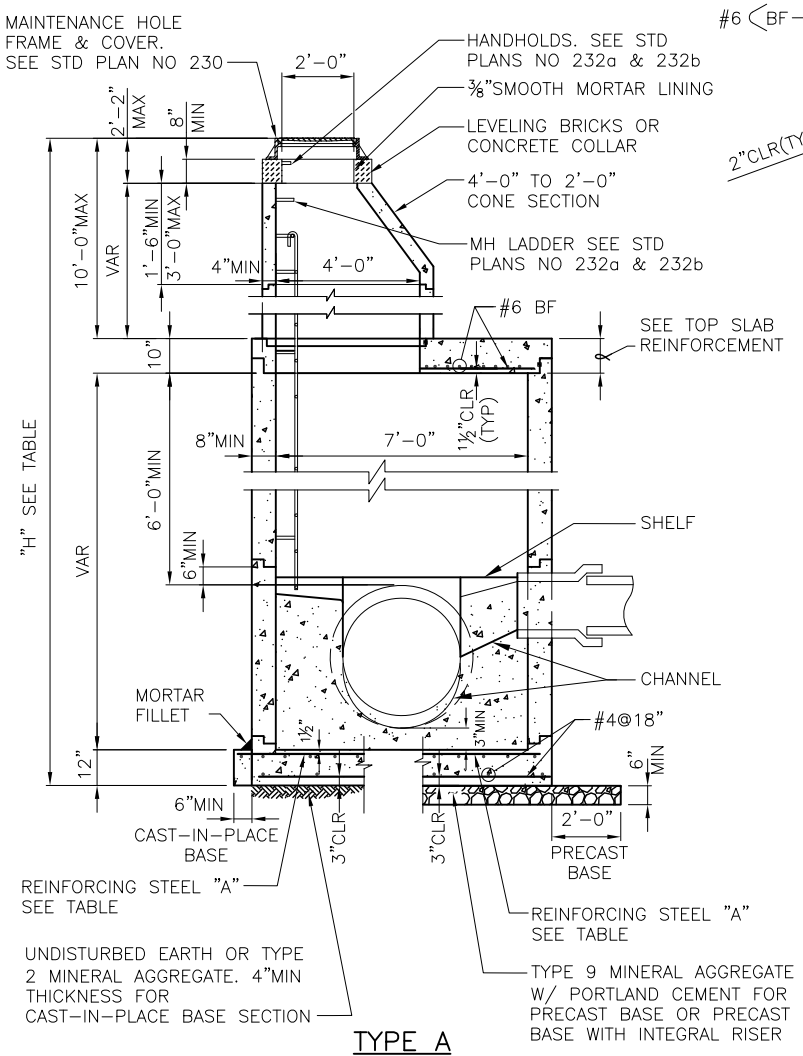

TYPE A
SECTION A–A

NOTES:

1. MATERIALS: CONCRETE–CLASS 4000; REINFORCING STEEL–ASTM A615 GRADE 60 MIN; CHANNEL AND SHELF MATERIAL – CONCRETE CLASS 3000.
2. PRECAST MAINTENANCE HOLE COMPONENTS SHALL CONFORM TO ASTM C 478. JOINTS BETWEEN PRECAST COMPONENTS SHALL BE RUBBER GASKETED CONFORMING TO ASTM C 443.
3. MINIMUM REQUIRED SOIL BEARING = 3,000 LBS/SQ FT
4. MAX HOLE SIZE SHALL BE OD OF PIPE PLUS 8 IN. MIN HOLE SIZE SHALL BE OD OF PIPE PLUS 3 IN. MIN CLEAR DISTANCE BETWEEN HOLES IS 12 IN.

REF STD SPEC SEC 7-05

City of Seattle	NOT TO SCALE	TYPE 207a MAINTENANCE HOLE

REV DATE: APR 2013

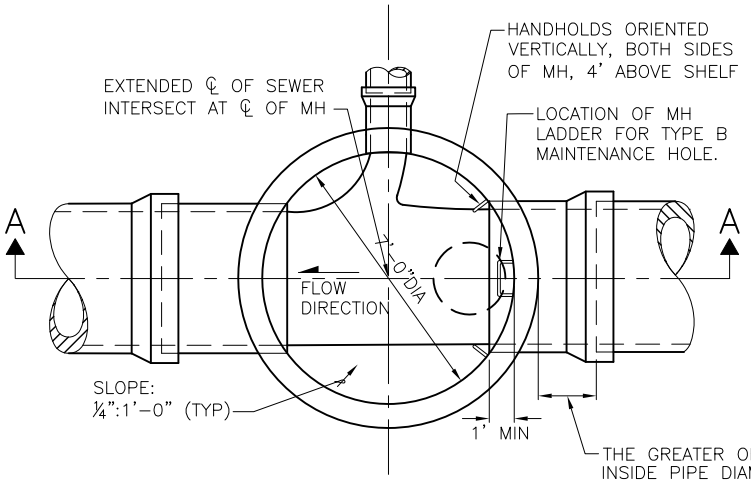

PLAN VIEW
(TOP REMOVED)

"H"	REINFORCING STEEL "A" MIN. SQ IN/FT, TOP FACE, IN EACH DIRECTION	
	PRECAST BASE	CAST-IN-PLACE BASE
20' MAX	0.34	0.27
30' MAX	0.43	0.35
40' MAX	0.52	0.42

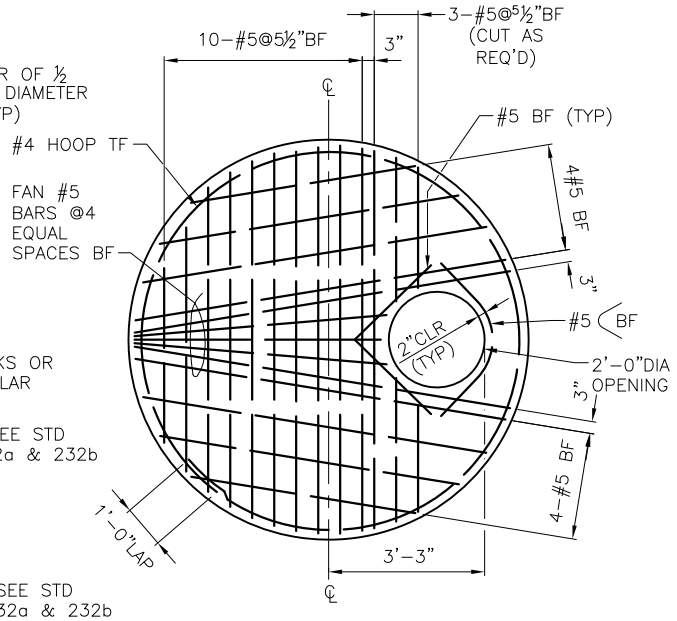

TOP SLAB REINFORCEMENT

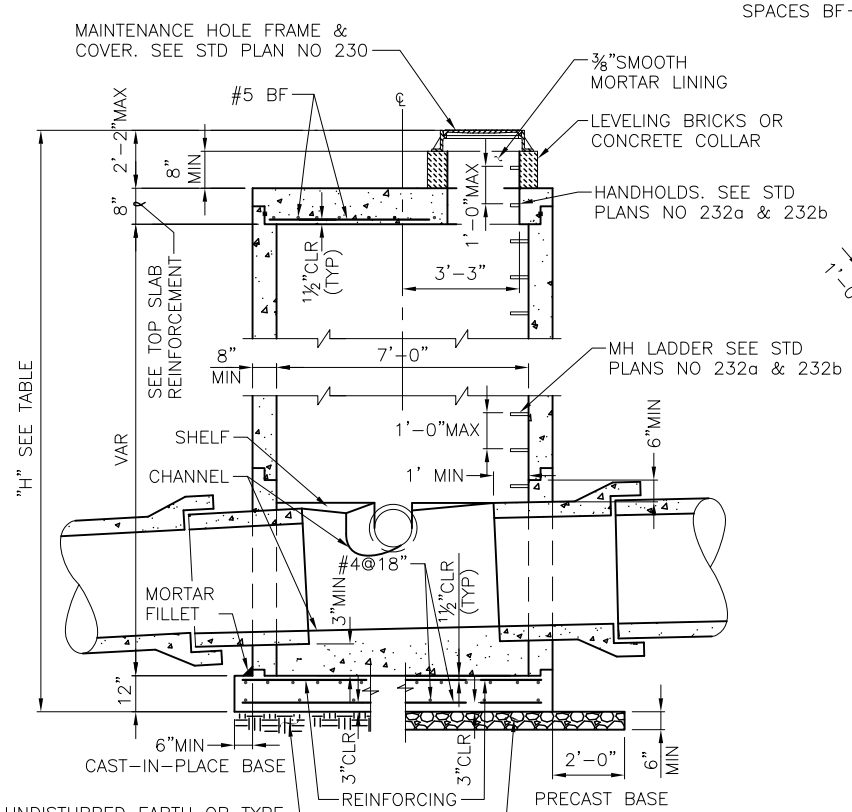

TYPE B
SECTION A-A

NOTES:

1. MATERIAL: CONCRETE-CLASS 4000; REINFORCING STEEL-ASTM A615 GRADE 60 MIN; CHANNEL AND SHELF MATERIAL-CONCRETE CLASS 3000.
2. PRECAST MAINTENANCE HOLE COMPONENTS SHALL CONFORM TO ASTM C 478. JOINTS BETWEEN PRECAST COMPONENTS SHALL BE RUBBER GASKETED CONFORMING TO ASTM C 443.
3. MINIMUM REQUIRED SOIL BEARING = 3,000 LBS/SQ FT
4. MAX HOLE SIZE SHALL BE OD OF PIPE PLUS 8 IN. MIN HOLE SIZE SHALL BE OD OF PIPE PLUS 3 IN. MIN CLEAR DISTANCE BETWEEN HOLES IS 12 IN.

REF STD SPEC SEC 7-05

City of Seattle	NOT TO SCALE	TYPE 207b MAINTENANCE HOLE

REV DATE: DEC 2013

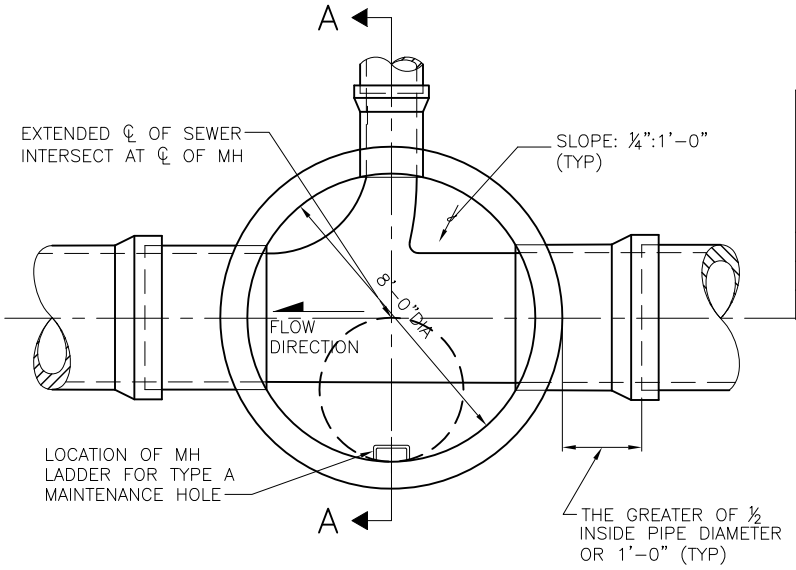

PLAN VIEW
(TOP REMOVED)

"H"	REINFORCING STEEL "A" MIN. SQ IN/FT, TOP FACE, IN EACH DIRECTION	
	PRECAST BASE	CAST–IN–PLACE BASE
20' MAX	0.54	0.45
30' MAX	0.66	0.55
40' MAX	0.78	0.64

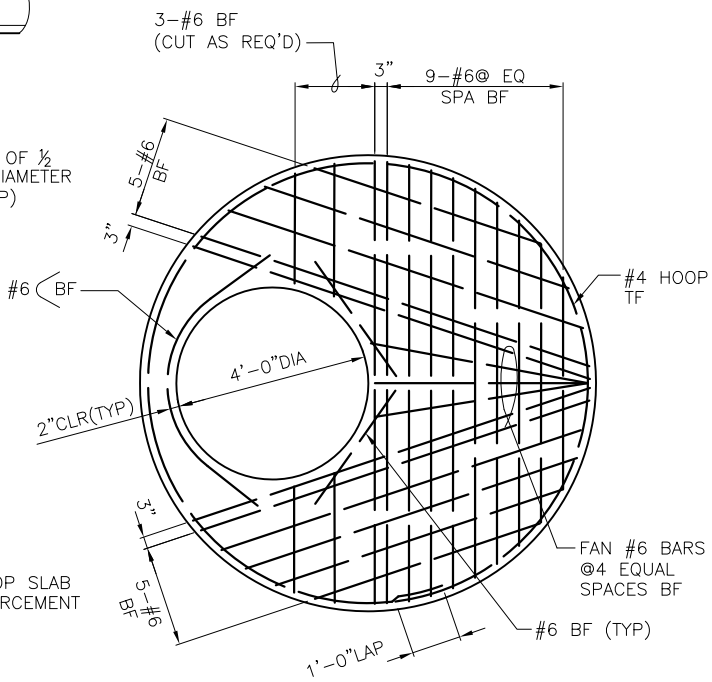

TOP SLAB REINFORCEMENT

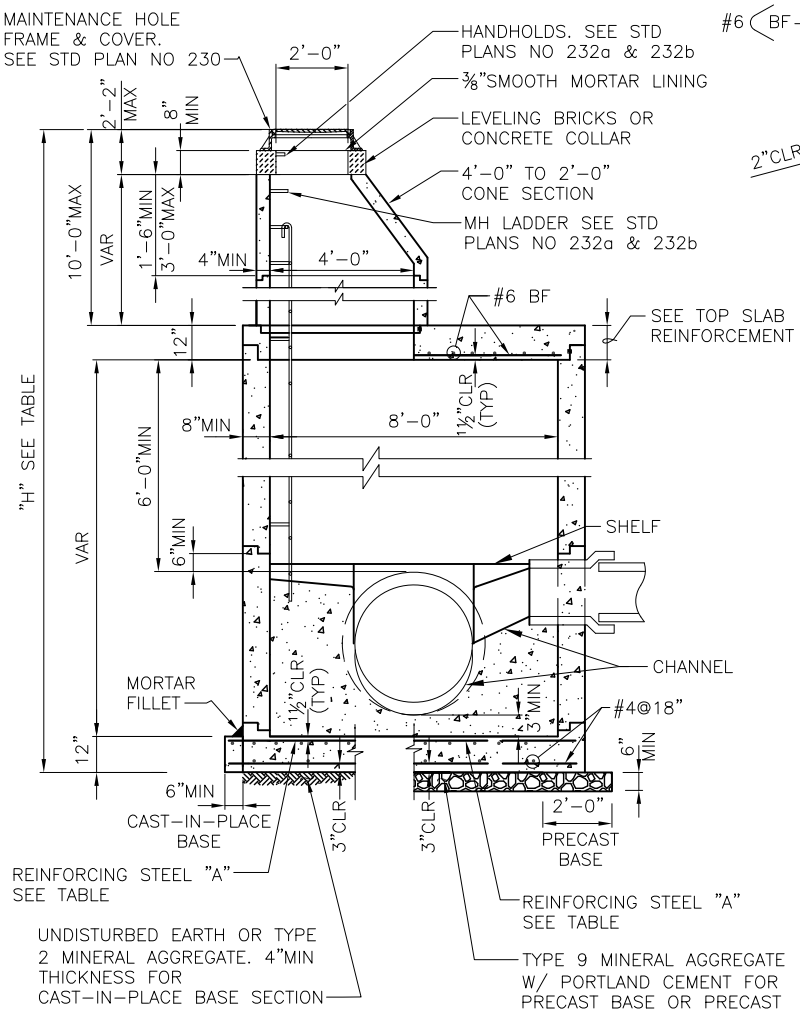

TYPE A
SECTION A–A

NOTES:

1. MATERIAL; CONCRETE–CLASS 4000 REINFORCING STEEL–ASTM A615 GRADE 60 MIN CHANNEL AND SHELF MATERIAL; CONCRETE CLASS 3000.
2. PRECAST MAINTENANCE HOLE COMPONENTS SHALL CONFORM TO ASTM C 478. JOINTS BETWEEN PRECAST COMPONENTS SHALL BE RUBBER GASKETED CONFORMING TO ASTM C 443.
3. MINIMUM REQUIRED SOIL BEARING = 3,000 LBS/SQ FT
4. MAX HOLE SIZE SHALL BE OD OF PIPE PLUS 9". MIN HOLE SIZE SHALL BE OD OF PIPE PLUS 3". MIN DISTANCE BETWEEN HOLES IS 12".

REF STD SPEC SEC 7-05

City of Seattle	NOT TO SCALE	TYPE 208a MAINTENANCE HOLE

REV DATE: DEC 2013

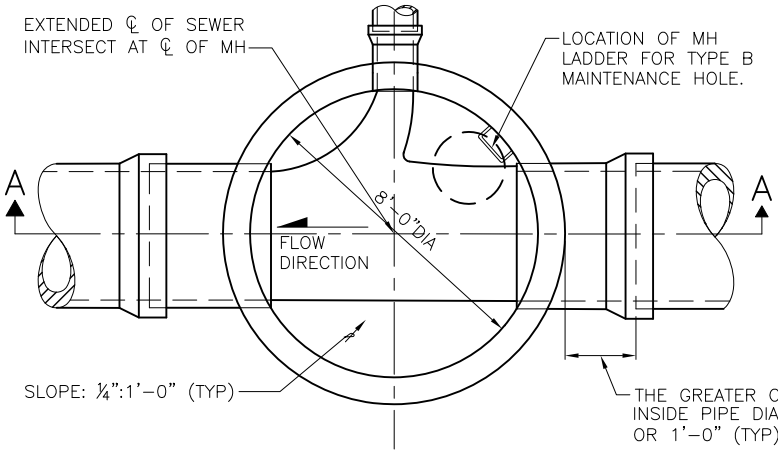

PLAN VIEW
(TOP REMOVED)

"H"	REINFORCING STEEL "A" MIN. SQ IN/FT, TOP FACE, IN EACH DIRECTION	
	PRECAST BASE	CAST-IN-PLACE BASE
20' MAX	0.42	0.35
30' MAX	0.53	0.45
40' MAX	0.65	0.54

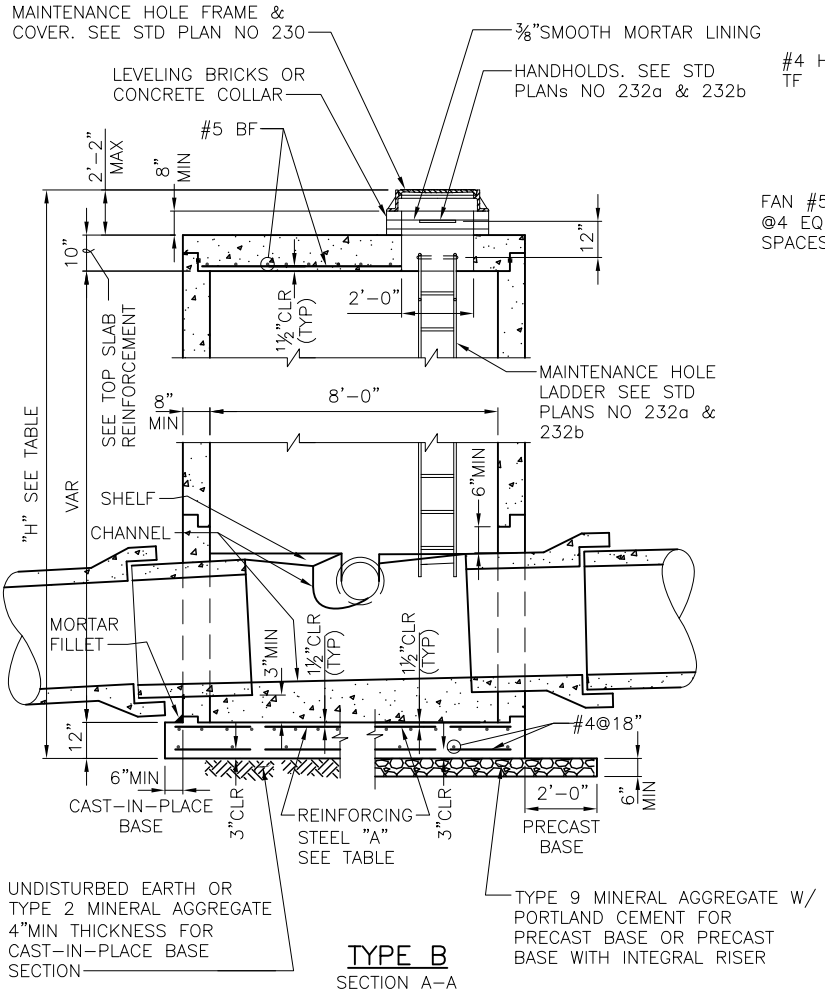

TYPE B
SECTION A–A

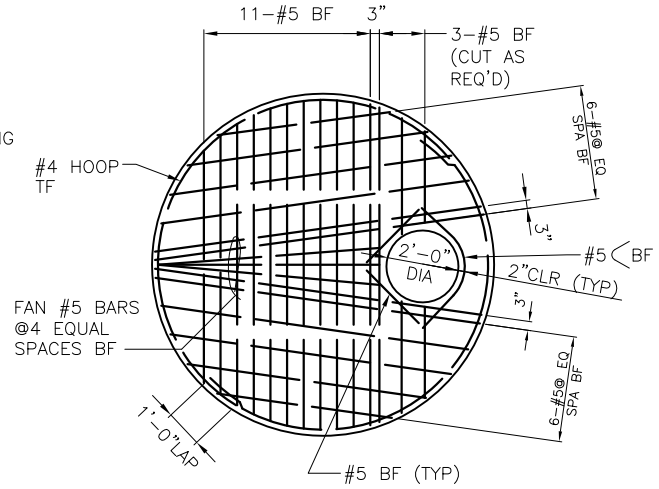

TOP SLAB REINFORCEMENT

NOTES:

1. MATERIAL; CONCRETE–CLASS 4000 REINFORCING STEEL–ASTM A615 GRADE 60 MIN CHANNEL AND SHELF MATERIAL; CONCRETE CLASS 3000.
2. PRECAST MAINTENANCE HOLE COMPONENTS SHALL CONFORM TO ASTM C 478. JOINTS BETWEEN PRECAST COMPONENTS SHALL BE RUBBER GASKETED CONFORMING TO ASTM C 443.
3. MINIMUM REQUIRED SOIL BEARING = 3,000 LBS/SQ FT
4. MAX HOLE SIZE SHALL BE OD OF PIPE PLUS 9". MIN HOLE SIZE SHALL BE OD OF PIPE PLUS 3". MIN DISTANCE BETWEEN HOLES IS 12".

REF STD SPEC SEC 7-05

City of Seattle	NOT TO SCALE	TYPE 208b MAINTENANCE HOLE

REV DATE: DEC 2013

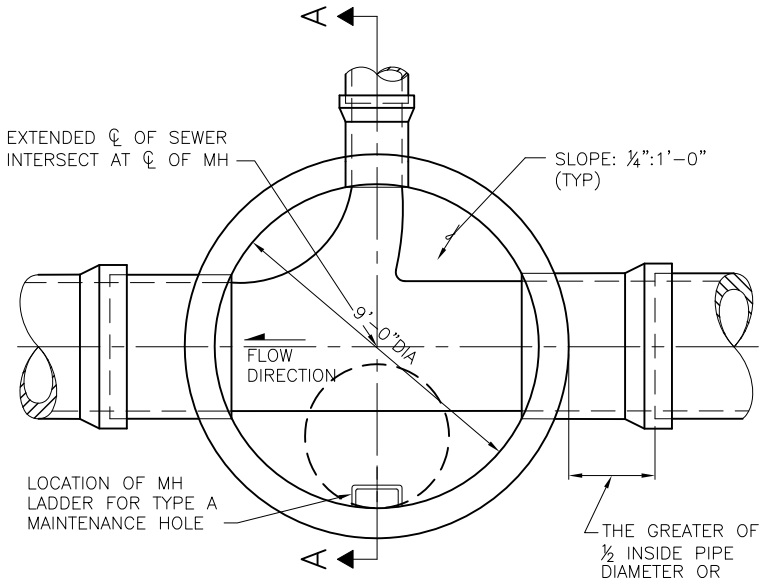

PLAN VIEW
(TOP REMOVED)

"H"	REINFORCING STEEL "A" MIN. SQ IN/FT, TOP FACE, IN EACH DIRECTION	
	PRECAST BASE	CAST–IN–PLACE BASE
20' MAX	0.57	0.49
30' MAX	0.70	0.59
40' MAX	0.81	0.69

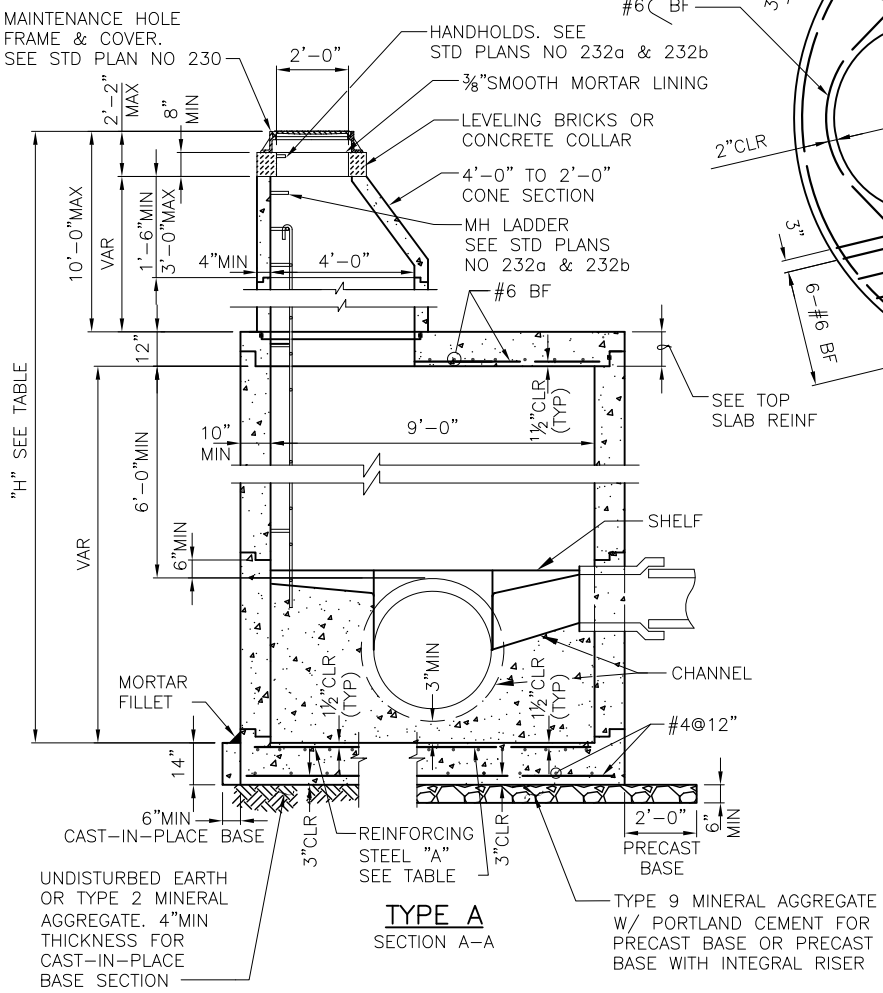

TYPE A
SECTION A–A

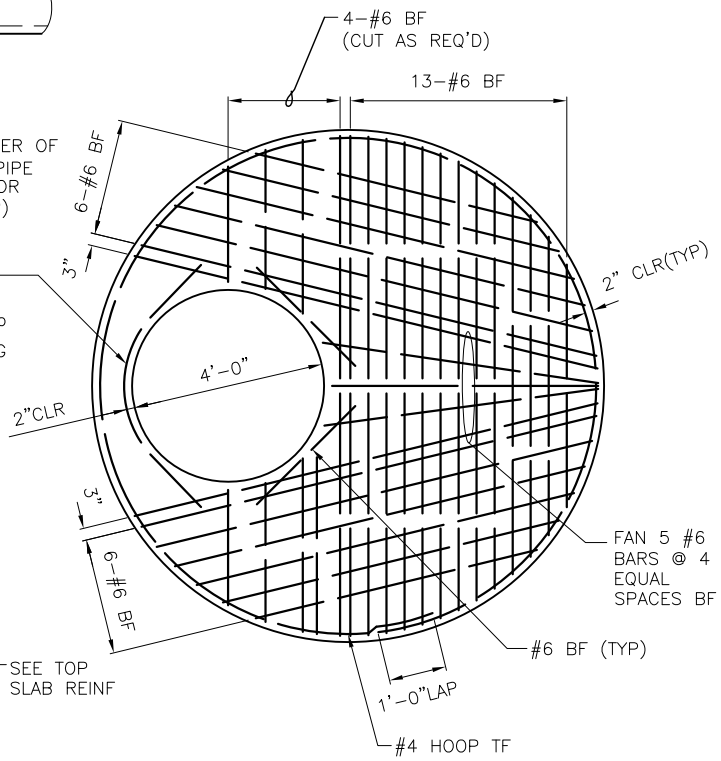

TOP SLAB REINFORCEMENT

NOTES:

1. MATERIAL; CONCRETE–CLASS 4000
   REINFORCING STEEL–ASTM A615 GRADE 60 MIN
   CHANNEL AND SHELF MATERIAL; CONCRETE CLASS 3000.
2. PRECAST MAINTENANCE HOLE COMPONENTS SHALL CONFORM TO ASTM C 478. JOINTS BETWEEN PRECAST COMPONENTS SHALL BE RUBBER GASKETED CONFORMING TO ASTM C 443.
3. MINIMUM REQUIRED SOIL BEARING = 3,000 LBS/SQ FT
4. MAX HOLE SIZE SHALL BE OD OF PIPE PLUS 10". MIN HOLE SIZE SHALL BE OD OF PIPE PLUS 3". MIN DISTANCE BETWEEN HOLES IS 12".

REF STD SPEC SEC 7-05

City of Seattle	NOT TO SCALE	TYPE 209a MAINTENANCE HOLE

REV DATE: DEC 2013

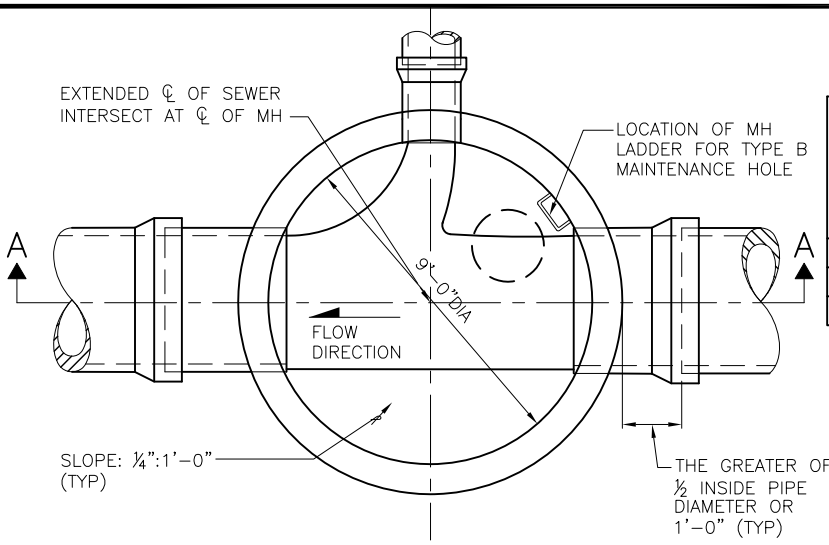

PLAN VIEW
(TOP REMOVED)

"H"	REINFORCING STEEL "A" MIN. SQ IN/FT, TOP FACE, IN EACH DIRECTION	
	PRECAST BASE	CAST-IN-PLACE BASE
20' MAX	0.44	0.37
30' MAX	0.56	0.48
40' MAX	0.68	0.58

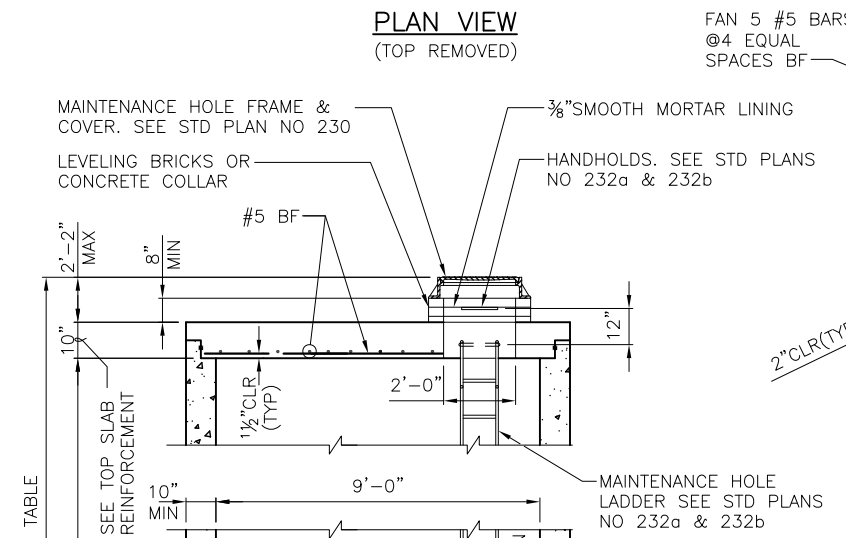

TYPE B
SECTION A-A

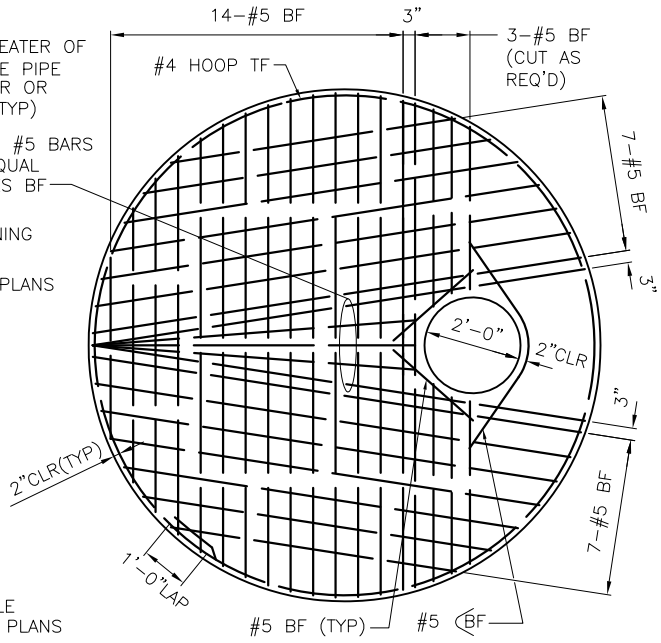

TOP SLAB REINFORCEMENT

NOTES:

1. MATERIAL; CONCRETE-CLASS 4000 REINFORCING STEEL-ASTM A615 GRADE 60 MIN CHANNEL AND SHELF MATERIAL; CONCRETE CLASS 3000.
2. PRECAST MAINTENANCE HOLE COMPONENTS SHALL CONFORM TO ASTM C 478. JOINTS BETWEEN PRECAST COMPONENTS SHALL BE RUBBER GASKETED CONFORMING TO ASTM C 443.
3. MINIMUM REQUIRED SOIL BEARING = 3,000 LBS/SQ FT
4. MAX HOLE SIZE SHALL BE OD OF PIPE PLUS 10". MIN HOLE SIZE SHALL BE OD OF PIPE PLUS 3". MIN DISTANCE BETWEEN HOLES IS 12".

REF STD SPEC SEC 7-05

City of Seattle	NOT TO SCALE	TYPE 209b MAINTENANCE HOLE

REV DATE: DEC 2013

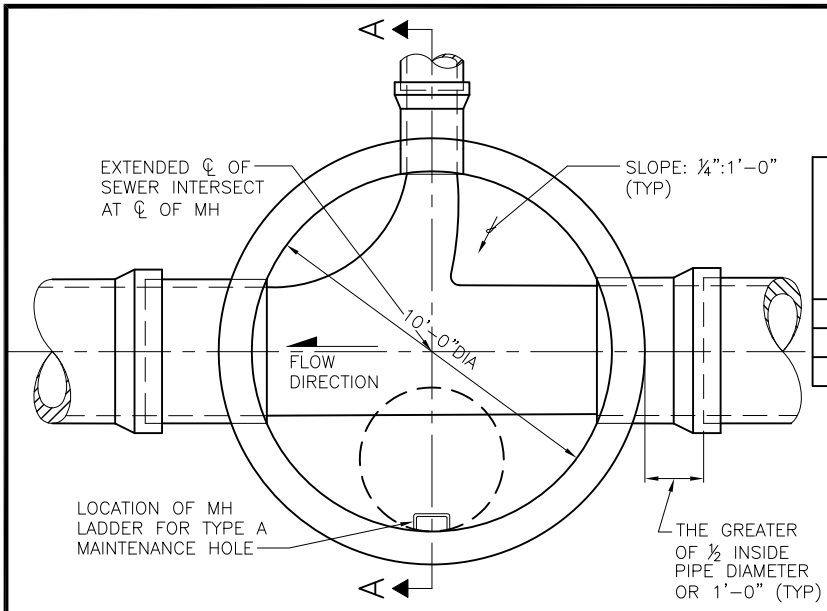

PLAN VIEW
(TOP REMOVED)

"H"	REINFORCING STEEL "A" MIN. SQ IN/FT, TOP FACE, IN EACH DIRECTION	
	PRECAST BASE	CAST–IN–PLACE BASE
20' MAX	0.70	0.60
30' MAX	0.85	0.73
40' MAX	1.00	0.86

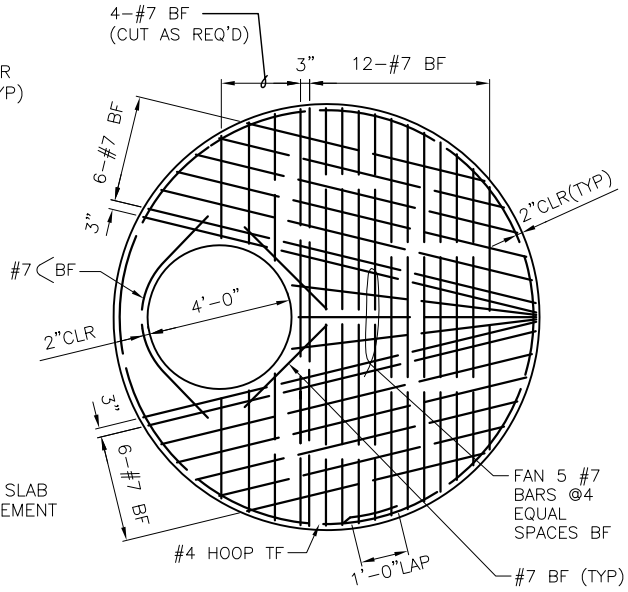

TOP SLAB REINFORCEMENT

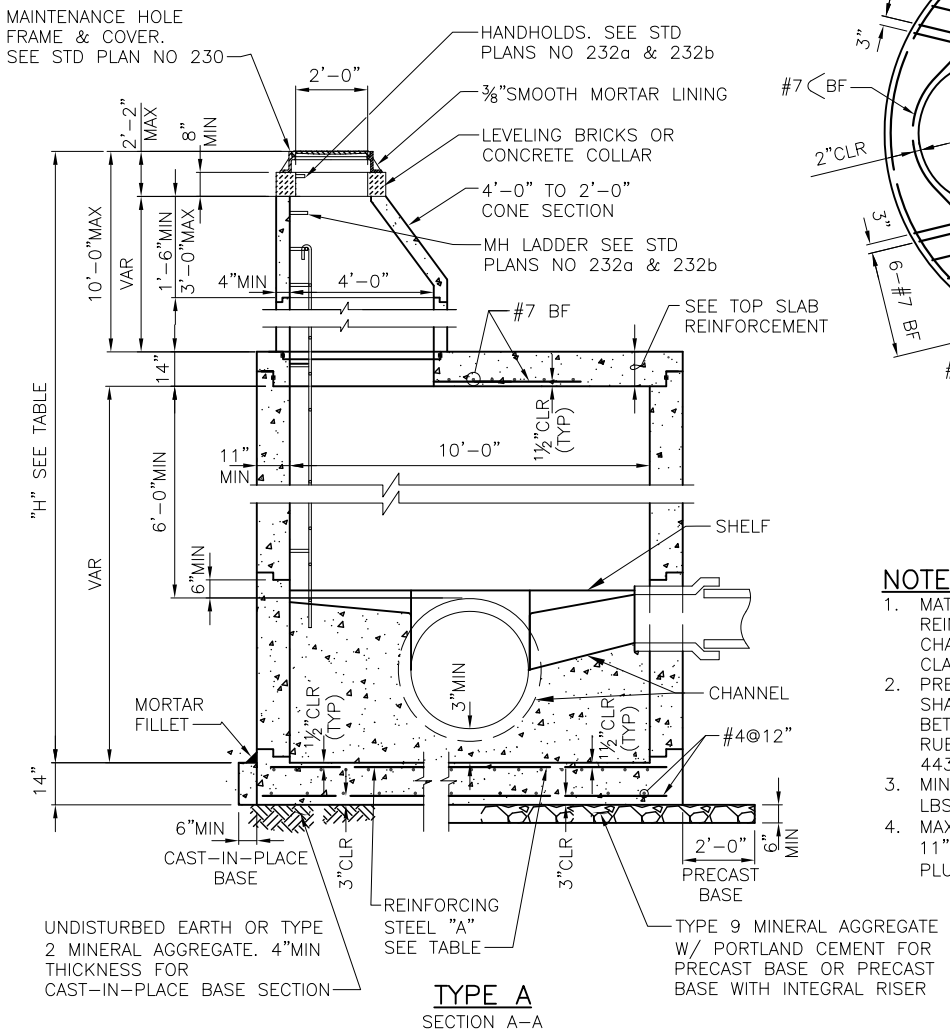

TYPE A
SECTION A–A

NOTES:

1. MATERIAL; CONCRETE–CLASS 4000 REINFORCING STEEL–ASTM A615 GRADE 60 MIN CHANNEL AND SHELF MATERIAL; CONCRETE CLASS 3000.
2. PRECAST MAINTENANCE HOLE COMPONENTS SHALL CONFORM TO ASTM C 478. JOINTS BETWEEN PRECAST COMPONENTS SHALL BE RUBBER GASKETED CONFORMING TO ASTM C 443.
3. MINIMUM REQUIRED SOIL BEARING = 3,000 LBS/SQ FT
4. MAX HOLE SIZE SHALL BE OD OF PIPE PLUS 11". MIN HOLE SIZE SHALL BE OD OF PIPE PLUS 3". MIN DISTANCE BETWEEN HOLES IS 12".

REF STD SPEC SEC 7-05

City of Seattle	NOT TO SCALE	TYPE 210a MAINTENANCE HOLE

REV DATE: DEC 2013

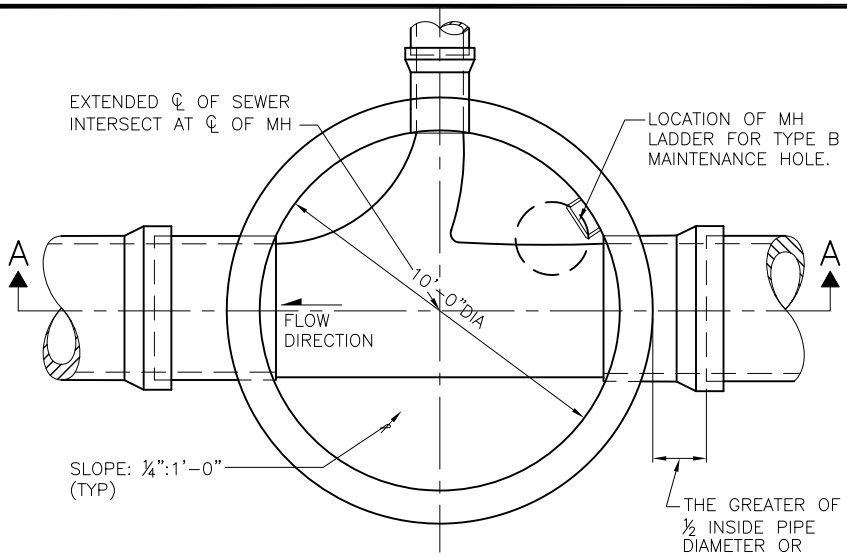

PLAN VIEW
(TOP REMOVED)

"H"	REINFORCING STEEL "A" MIN. SQ IN/FT, TOP FACE, IN EACH DIRECTION	
	PRECAST BASE	CAST-IN-PLACE BASE
20' MAX	052	0.45
30' MAX	0.66	0.57
40' MAX	0.81	0.70

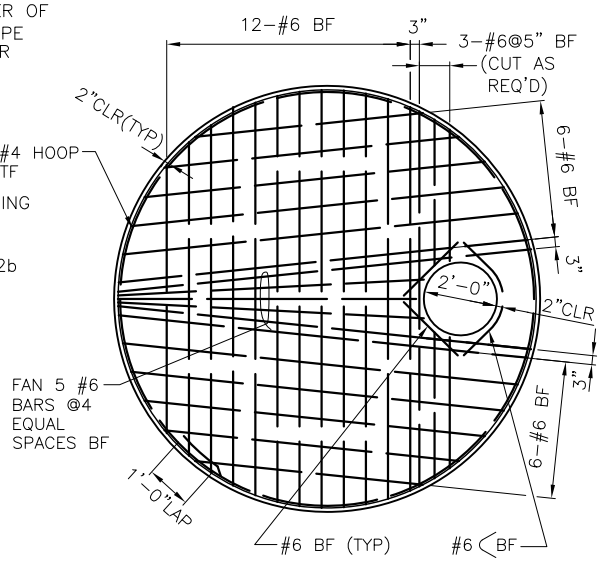

TOP SLAB REINFORCEMENT

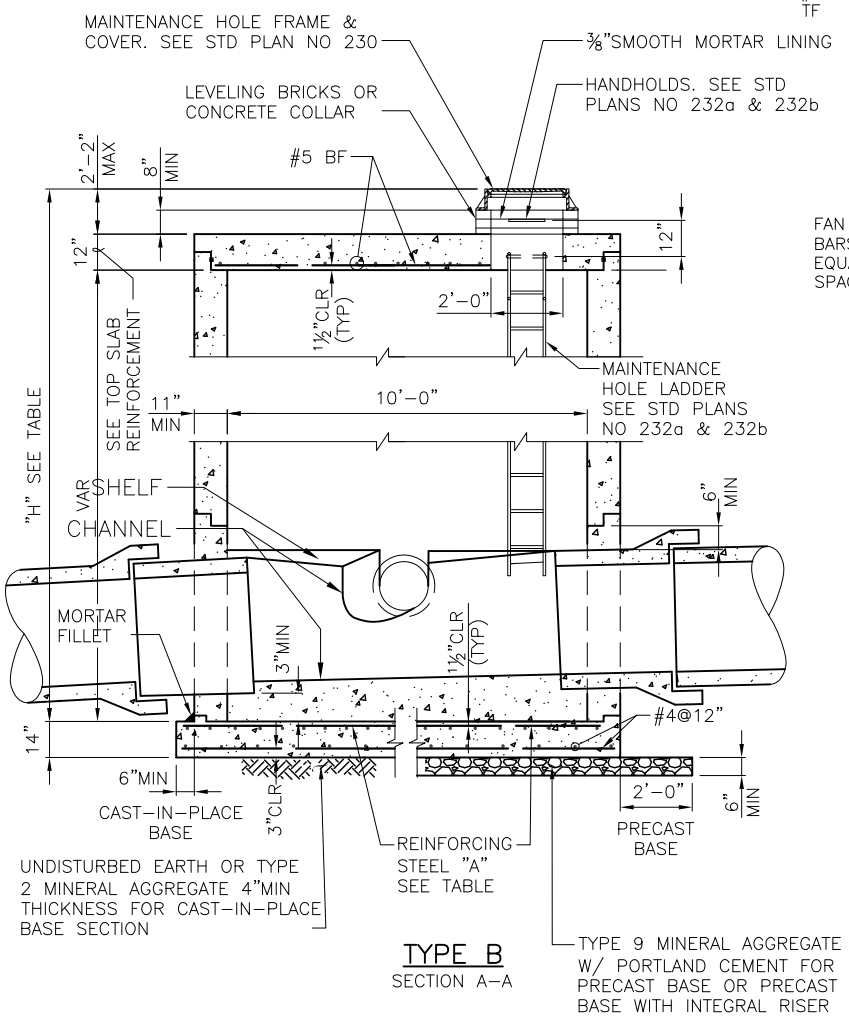

TYPE B
SECTION A-A

NOTES:

1. MATERIAL; CONCRETE-CLASS 4000 REINFORCING STEEL-ASTM A615 GRADE 60 MIN CHANNEL AND SHELF MATERIAL; CONCRETE CLASS 3000.
2. PRECAST MAINTENANCE HOLE COMPONENTS SHALL CONFORM TO ASTM C 478. JOINTS BETWEEN PRECAST COMPONENTS SHALL BE RUBBER GASKETED CONFORMING TO ASTM C 443.
3. MINIMUM REQUIRED SOIL BEARING = 3,000 LBS/SQ FT
4. MAX HOLE SIZE SHALL BE OD OF PIPE PLUS 11". MIN HOLE SIZE SHALL BE OD OF PIPE PLUS 3". MIN DISTANCE BETWEEN HOLES IS 12".

REF STD SPEC SEC 7-05

City of Seattle	NOT TO SCALE	TYPE 210b MAINTENANCE HOLE

REV DATE: DEC 2013

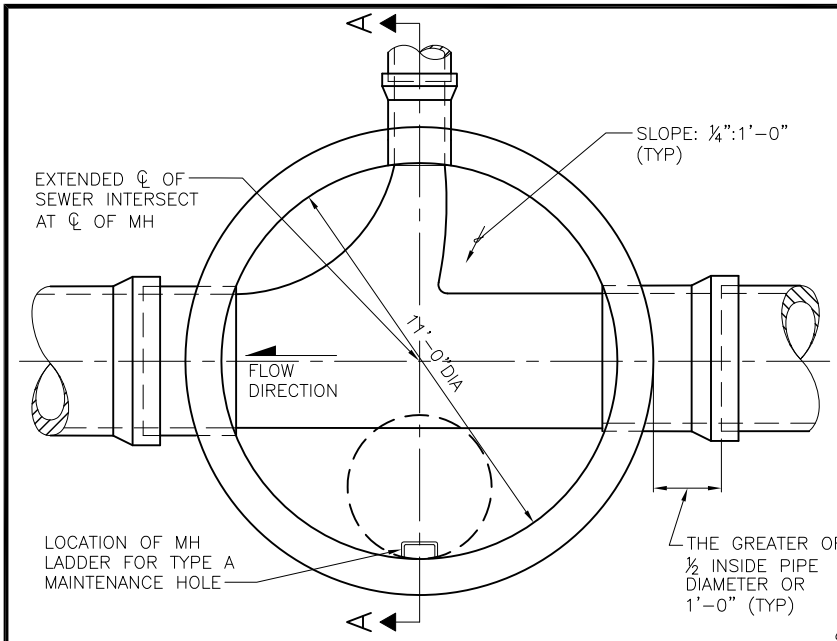

PLAN VIEW
(TOP REMOVED)

"H"	REINFORCING STEEL "A" MIN. SQ IN/FT, TOP FACE, IN EACH DIRECTION	
	PRECAST BASE	CAST–IN–PLACE BASE
20' MAX	0.85	0.74
30' MAX	1.02	0.89
40' MAX	1.20	1.05

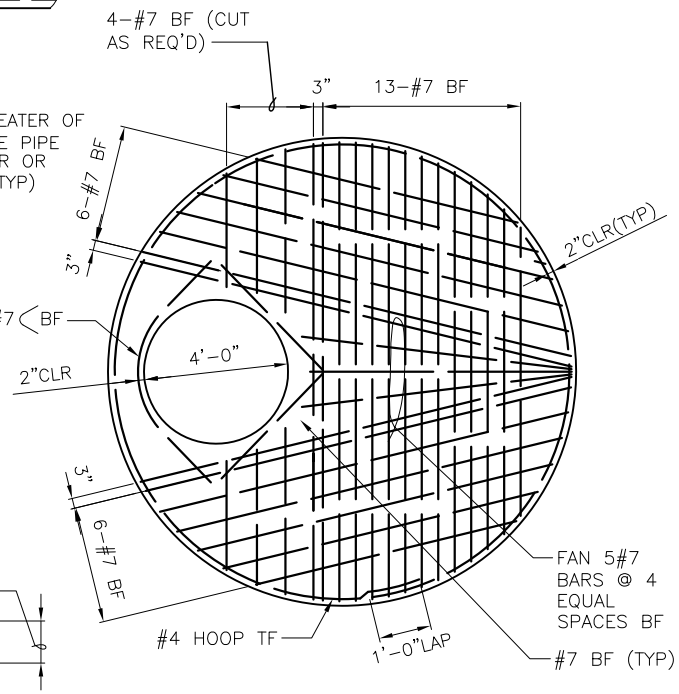

TOP SLAB REINFORCEMENT

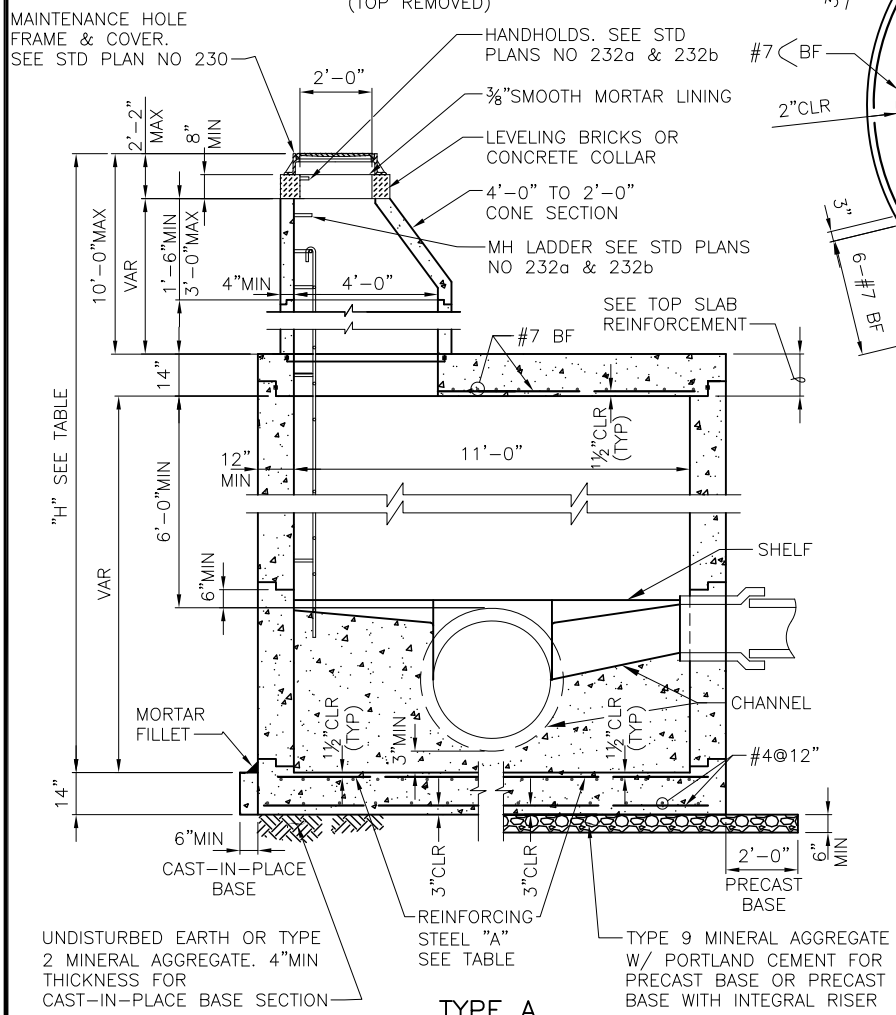

TYPE A
SECTION A–A

NOTES:

1. MATERIAL; CONCRETE–CLASS 4000 REINFORCING STEEL–ASTM A615 GRADE 60 MIN CHANNEL AND SHELF MATERIAL; CONCRETE CLASS 3000.
2. PRECAST MAINTENANCE HOLE COMPONENTS SHALL CONFORM TO ASTM C 478. JOINTS BETWEEN PRECAST COMPONENTS SHALL BE RUBBER GASKETED CONFORMING TO ASTM C 443.
3. MINIMUM REQUIRED SOIL BEARING = 3,000 LBS/SQ FT
4. MAX HOLE SIZE SHALL BE OD OF PIPE PLUS 12". MIN HOLE SIZE SHALL BE OD OF PIPE PLUS 3". MIN DISTANCE BETWEEN HOLES IS 12".

REF STD SPEC SEC 7-05

City of Seattle	NOT TO SCALE	TYPE 211a MAINTENANCE HOLE

REV DATE: DEC 2013

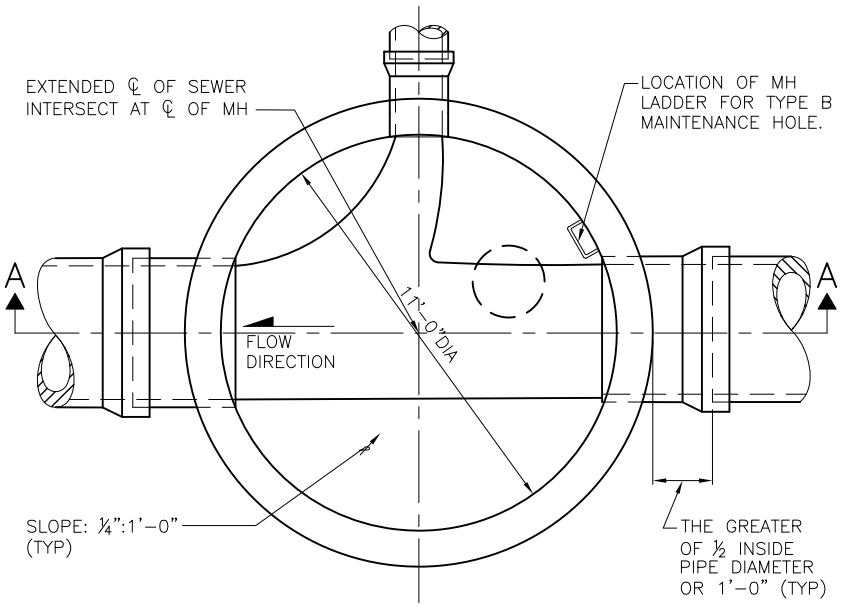

PLAN VIEW
(TOP REMOVED)

"H"	REINFORCING STEEL "A" MIN. SQ IN/FT, TOP FACE, IN EACH DIRECTION	
	PRECAST BASE	CAST-IN-PLACE BASE
20' MAX	0.62	0.54
30' MAX	0.79	0.69
40' MAX	0.97	0.85

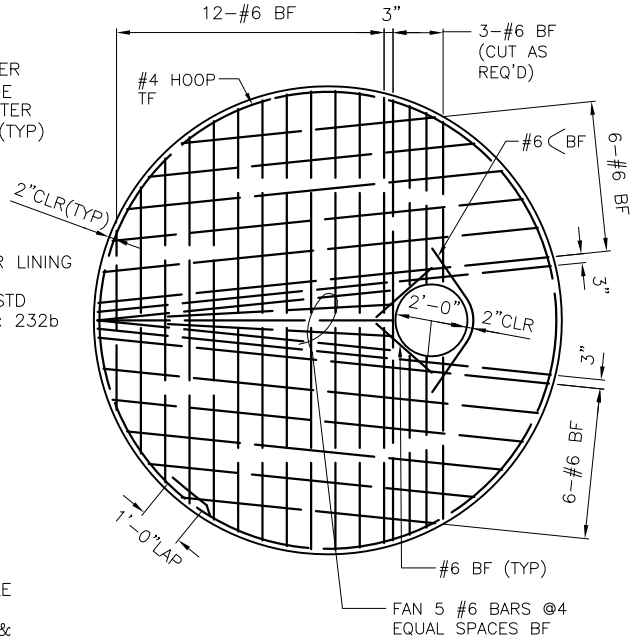

TOP SLAB REINFORCEMENT

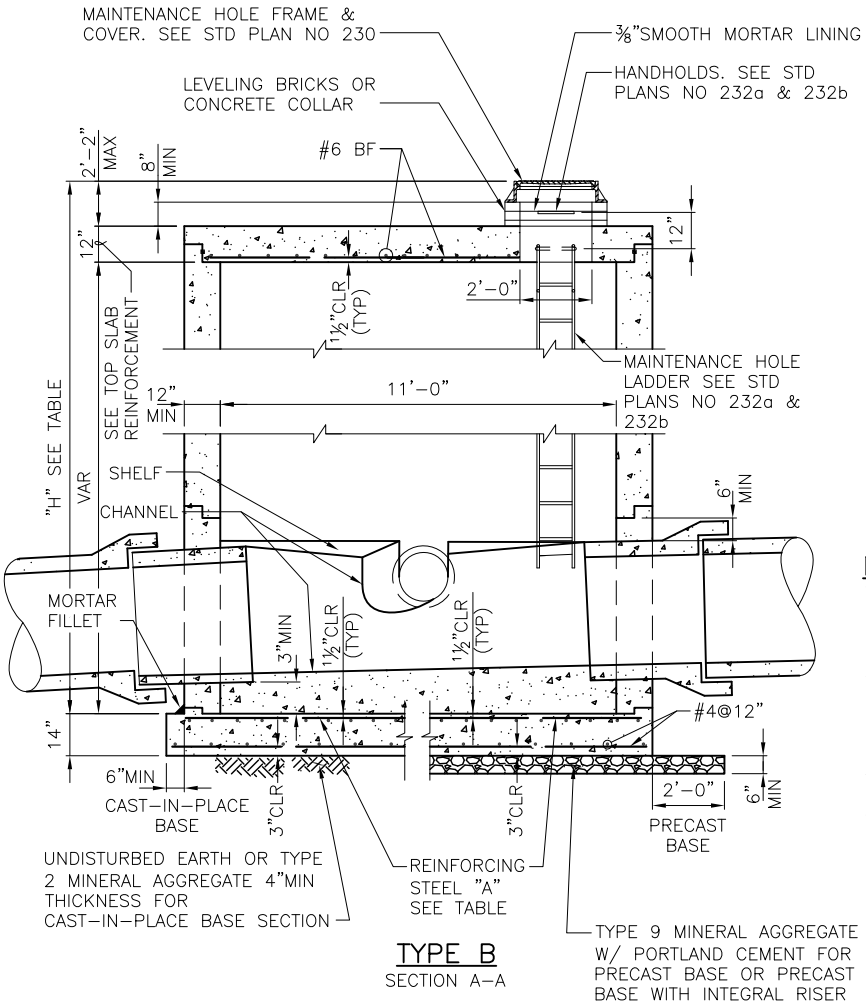

TYPE B
SECTION A-A

NOTES:

1. MATERIAL; CONCRETE-CLASS 4000 REINFORCING STEEL-ASTM A615 GRADE 60 MIN CHANNEL AND SHELF MATERIAL; CONCRETE CLASS 3000.
2. PRECAST MAINTENANCE HOLE COMPONENTS SHALL CONFORM TO ASTM C 478. JOINTS BETWEEN PRECAST COMPONENTS SHALL BE RUBBER GASKETED CONFORMING TO ASTM C 443.
3. MINIMUM REQUIRED SOIL BEARING = 3,000 LBS/SQ FT
4. MAX HOLE SIZE SHALL BE OD OF PIPE PLUS 12". MIN HOLE SIZE SHALL BE OD OF PIPE PLUS 3". MIN DISTANCE BETWEEN HOLES IS 12".

REF STD SPEC SEC 7-05

City of Seattle	NOT TO SCALE	TYPE 211b MAINTENANCE HOLE

REV DATE: DEC 2013

"H"	REINFORCING STEEL "A" MIN. SQ IN/FT, TOP FACE, IN EACH DIRECTION	
	PRECAST BASE	CAST-IN-PLACE BASE
20' MAX	1.01	0.89
30' MAX	1.28	1.13
40' MAX	1.56	1.37

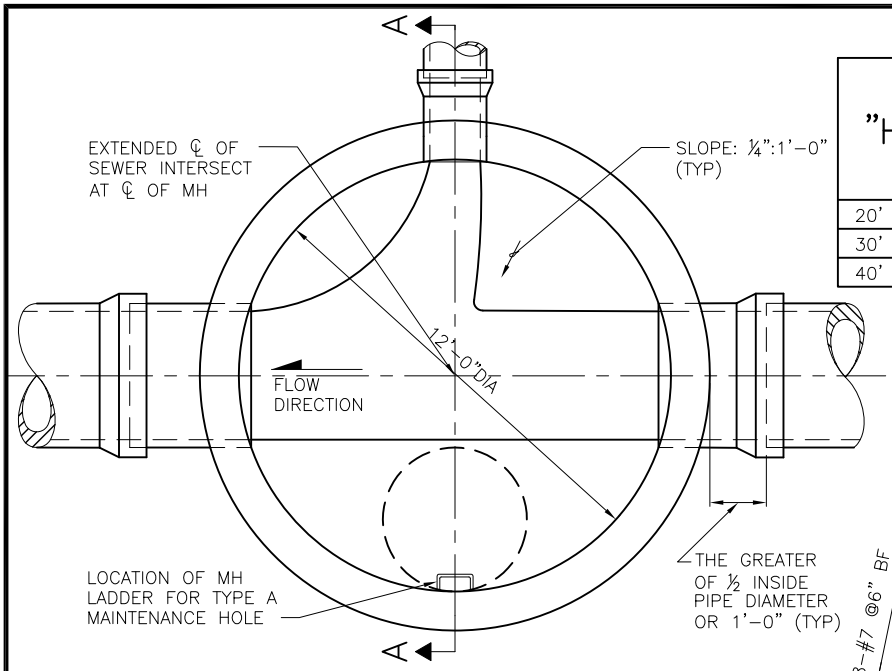

PLAN VIEW
(TOP REMOVED)

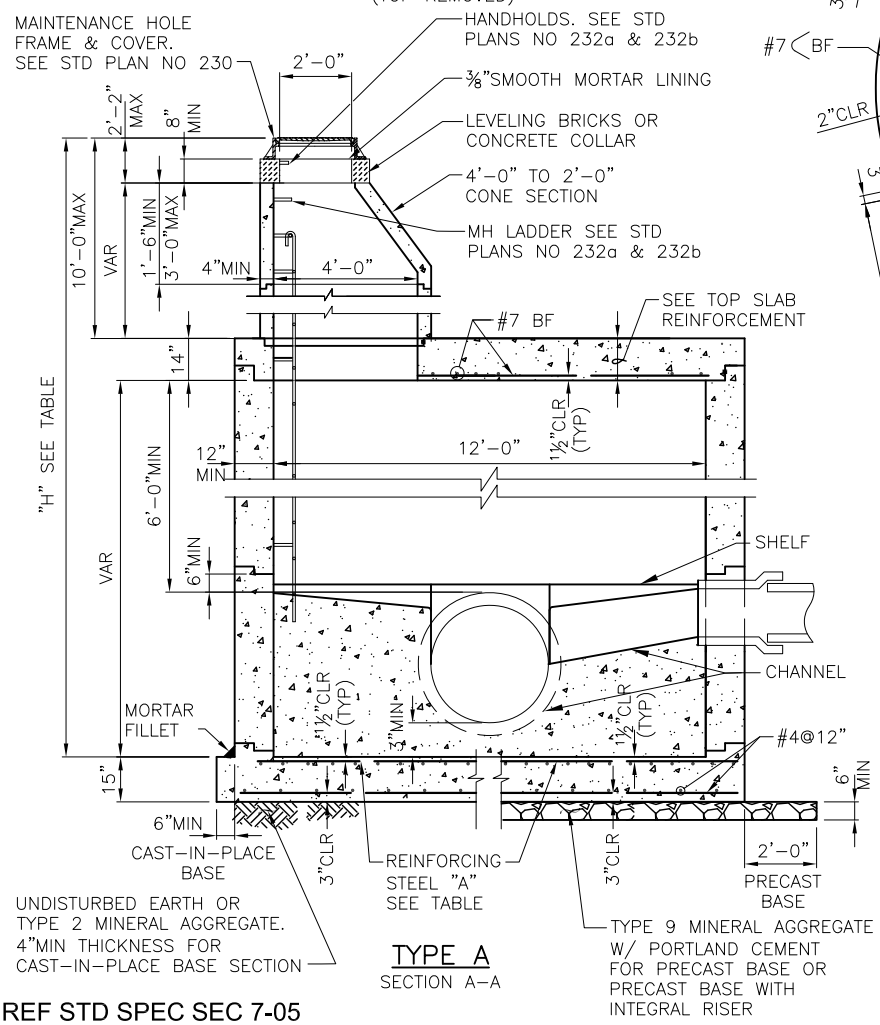

TYPE A
SECTION A-A

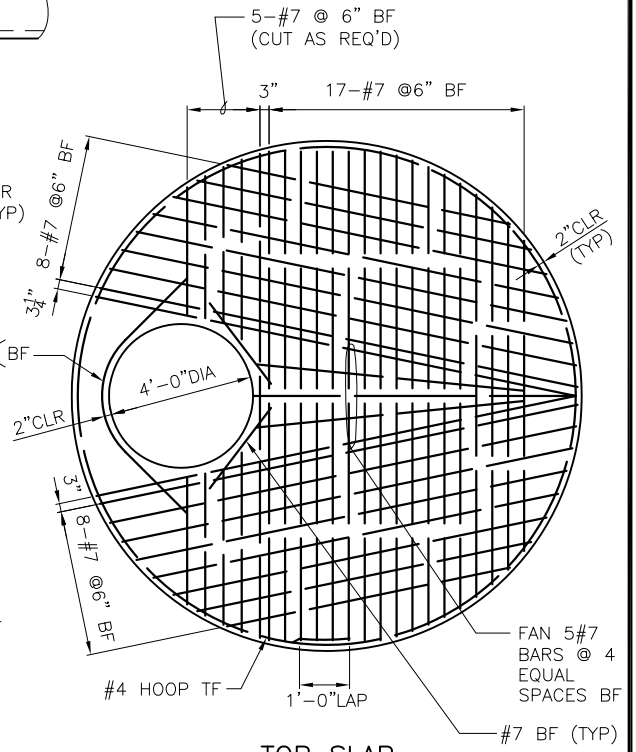

TOP SLAB REINFORCEMENT

NOTES:

1. MATERIAL; CONCRETE-CLASS 4000 REINFORCING STEEL-ASTM A615 GRADE 60 MIN CHANNEL AND SHELF MATERIAL; CONCRETE CLASS 3000.
2. PRECAST MAINTENANCE HOLE COMPONENTS SHALL CONFORM TO ASTM C 478. JOINTS BETWEEN PRECAST COMPONENTS SHALL BE RUBBER GASKETED CONFORMING TO ASTM C 443.
3. MINIMUM REQUIRED SOIL BEARING = 3,000 LBS/SQ FT
4. MAX HOLE SIZE SHALL BE OD OF PIPE PLUS 13". MIN HOLE SIZE SHALL BE OD OF PIPE PLUS 3". MIN DISTANCE BETWEEN HOLES IS 12".

REF STD SPEC SEC 7-05

City of Seattle	NOT TO SCALE	TYPE 212a MAINTENANCE HOLE

REV DATE: DEC 2013

"H"	REINFORCING STEEL "A" MIN. SQ IN/FT, TOP FACE, IN EACH DIRECTION	
	PRECAST BASE	CAST–IN–PLACE BASE
20' MAX	0.81	0.72
30' MAX	1.09	0.96
40' MAX	1.36	1.20

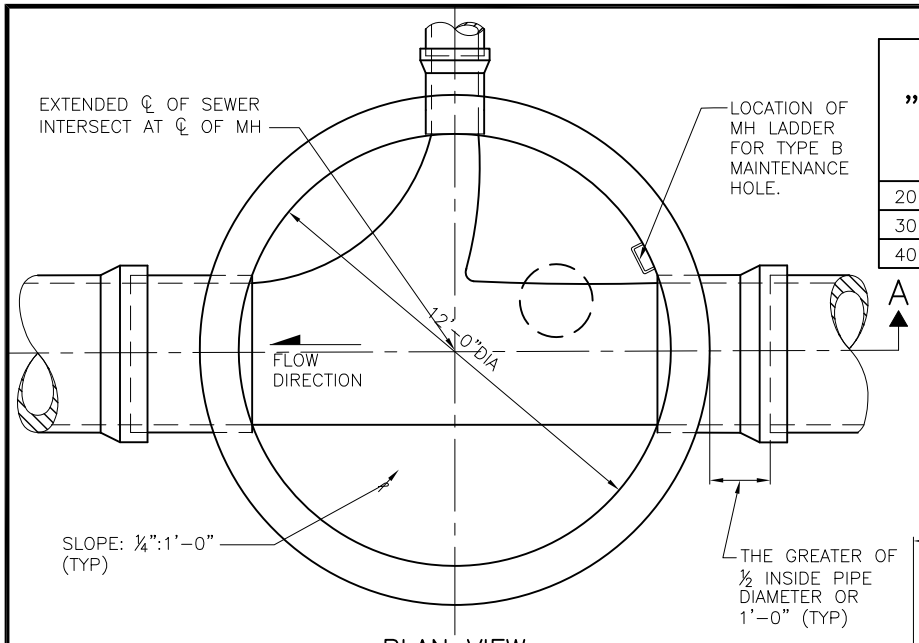

PLAN VIEW
(TOP REMOVED)

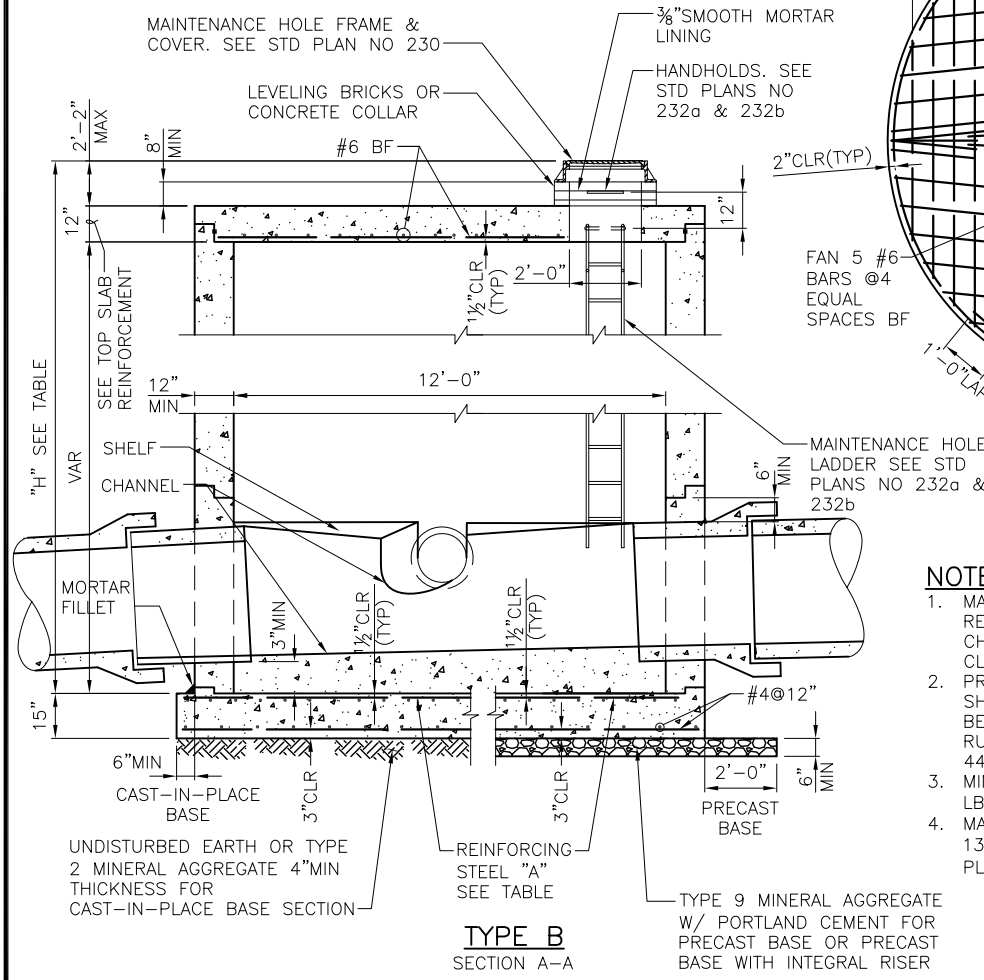

TYPE B
SECTION A–A

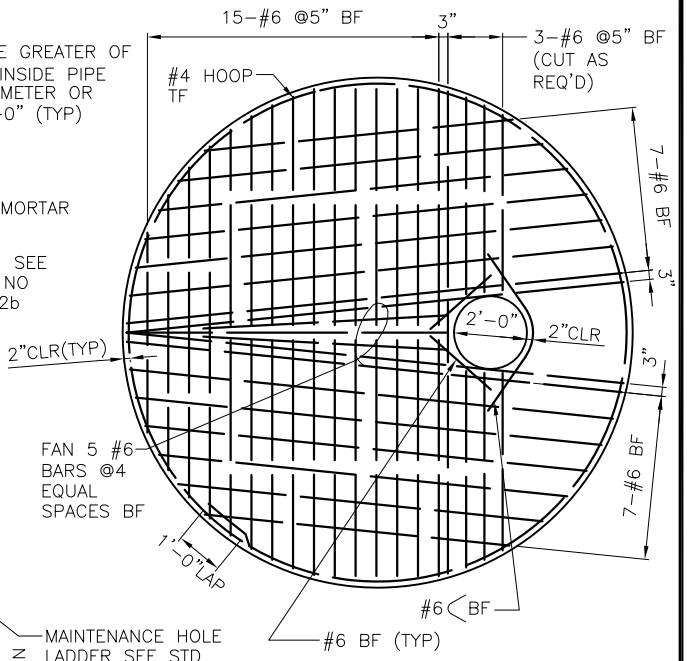

TOP SLAB REINFORCEMENT

NOTES:

1. MATERIAL; CONCRETE–CLASS 4000 REINFORCING STEEL–ASTM A615 GRADE 60 MIN CHANNEL AND SHELF MATERIAL; CONCRETE CLASS 3000.
2. PRECAST MAINTENANCE HOLE COMPONENTS SHALL CONFORM TO ASTM C 478. JOINTS BETWEEN PRECAST COMPONENTS SHALL BE RUBBER GASKETED CONFORMING TO ASTM C 443.
3. MINIMUM REQUIRED SOIL BEARING = 3,000 LBS/SQ FT
4. MAX HOLE SIZE SHALL BE OD OF PIPE PLUS 13". MIN HOLE SIZE SHALL BE OD OF PIPE PLUS 3". MIN DISTANCE BETWEEN HOLES IS 12".

REF STD SPEC SEC 7-05

City of Seattle	NOT TO SCALE	TYPE 212b MAINTENANCE HOLE

REV DATE: DEC 2012

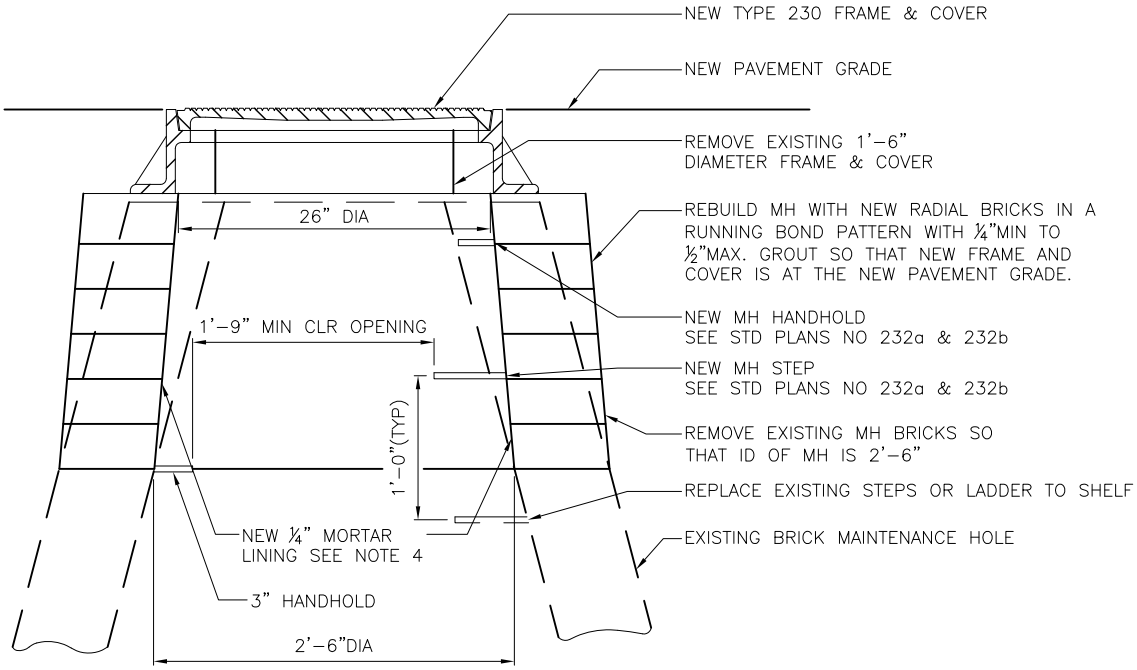

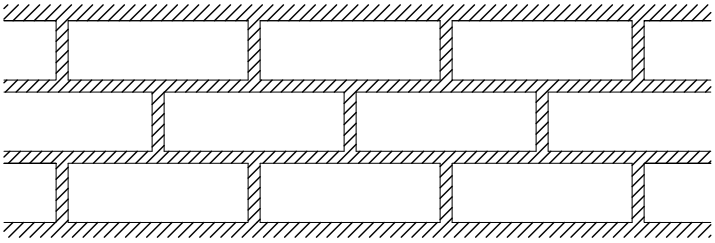

RUNNING BOND PATTERN

GROUT BETWEEN ALL BRICKS

REF STD SPEC SEC 7-05

City of Seattle	NOT TO SCALE	REBUILD EXISTING BRICK MAINTENANCE HOLE

REV DATE: DEC 2010

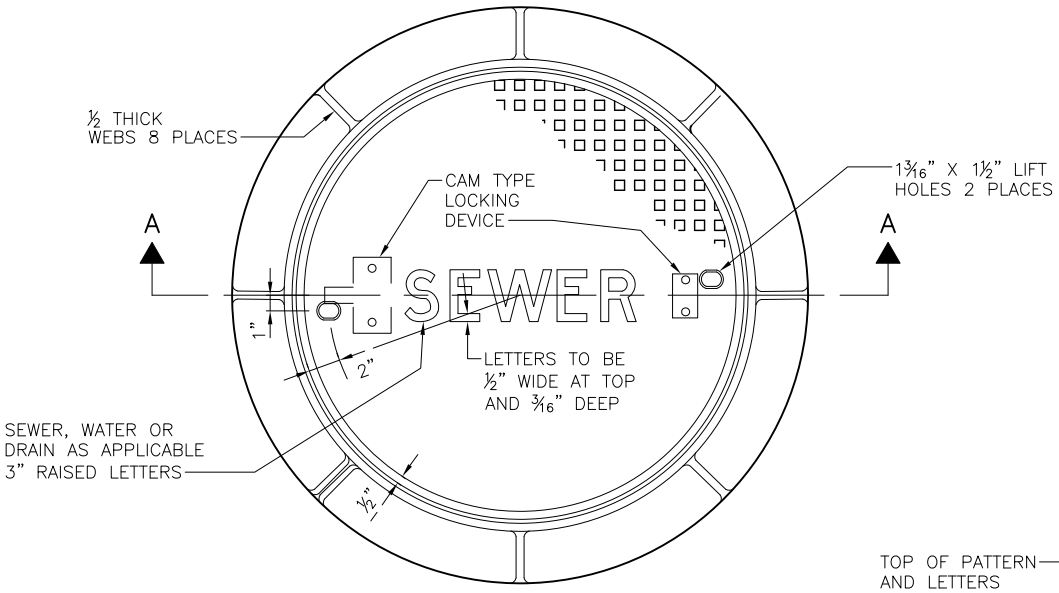

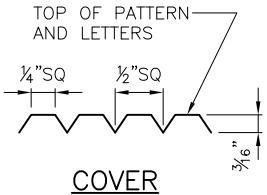

COVER
DETAIL PATTERN

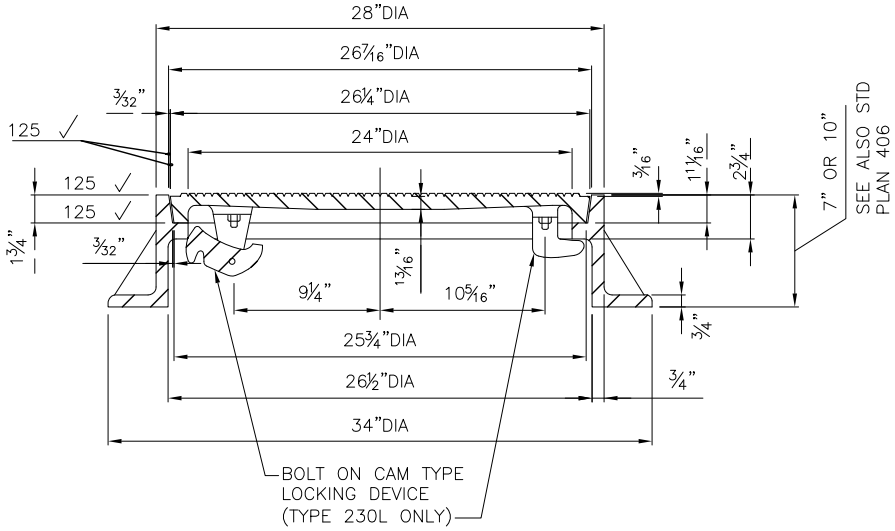

SECTION A–A

NOTES:

1. DESIGNATE LOCKING COVER AS TYPE 230L FOR USE IN NON–VEHICULAR TRAFFIC AREAS.
2. COVER THICKNESS IS MEASURED FROM THE BOTTOM OF THE PATTERN.
3. FRAMES SHALL BE MANUFACTURED FROM CAST IRON OR DUCTILE IRON.
4. COVERS SHALL BE MANUFACTURED FROM DUCTILE IRON.

REF STD SPEC SEC 7-05, 9-12

City of Seattle	NOT TO SCALE	2'-0" DIAMETER FRAME & COVER

REV DATE: APR 2013

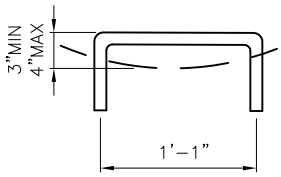

HANDHOLD

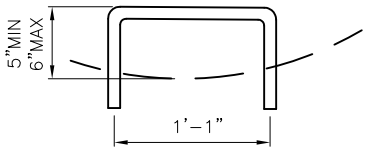

STEP

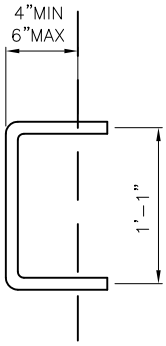

VERTICAL HANDHOLD

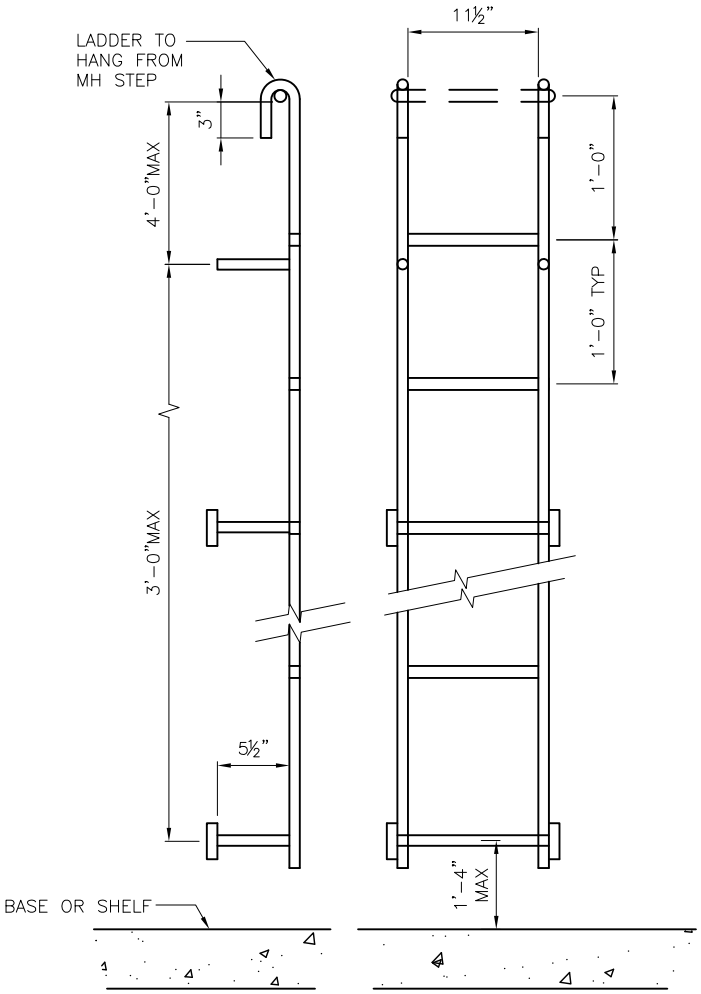

LADDER

NOTES:

1. MATERIAL – STEEL REINFORCED POLYPROPYLENE
2. DIMENSIONS FOR THE MH LADDER AND STEP ARE MINIMUM REQUIREMENTS ONLY.
3. WHEN THE DISTANCE FROM THE LAST (HIGHEST) STEP OR HANDHOLD TO THE TOP OF THE MH FRAME EXCEEDS 1'-6", A HANDHOLD SHALL BE INSTALLED MID-WAY IN THE LEVELING BRICK OR COLLAR.
4. EITHER STEPS, LADDERS OR A COMBINATION OF THE TWO CAN BE USED. IF BOTH STEPS AND LADDERS ARE USED IN ANY MH, THEY SHALL BE FROM THE SAME MANUFACTURER.
5. A VERTICAL HANDHOLD SHALL BE INSTALLED 4'-0" ABOVE THE SHELF WHEN INDICATED IN MH PLAN VIEW.

REF STD SPEC SEC 7-05

City of Seattle	NOT TO SCALE	MAINTENANCE HOLE LADDER, STEP AND HANDHOLD

REV DATE: APR 2013

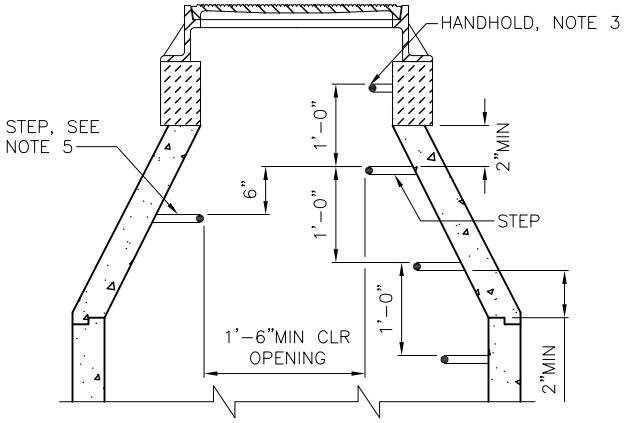

24" HIGH CONCENTRIC CONE

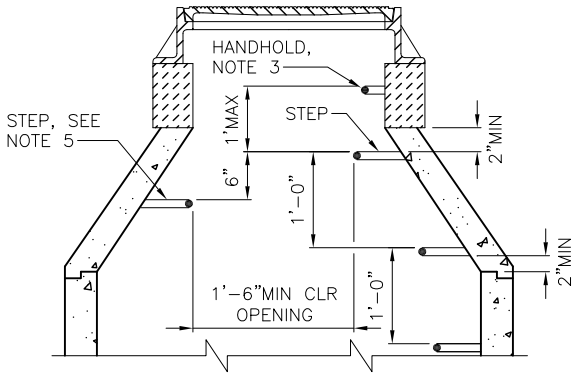

18" HIGH CONCENTRIC CONE

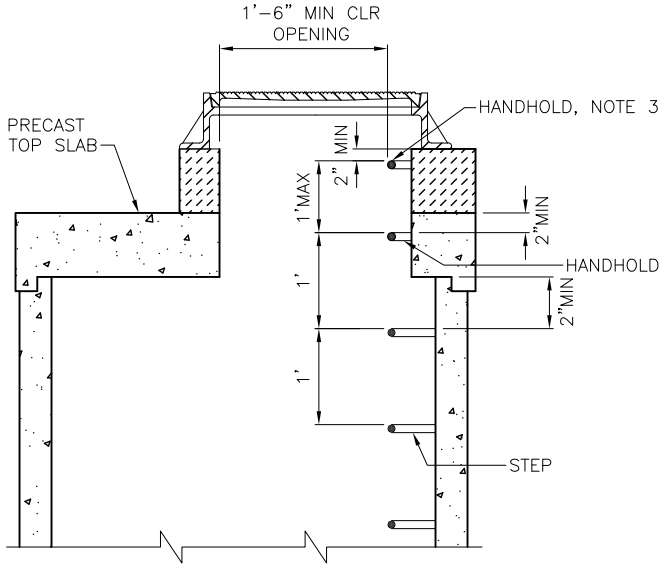

MH WITH PRECAST TOP SLAB

NOTES:

1. MATERIAL – STEEL REINFORCED POLYPROPYLENE.
2. DIMENSIONS FOR THE MH LADDER AND STEP ARE MINIMUM REQUIREMENTS ONLY.
3. WHEN THE DISTANCE FROM THE LAST (HIGHEST) STEP OR HANDHOLD TO THE TOP OF THE MH FRAME EXCEEDS 1'-6, A HANDHOLD SHALL BE INSTALLED MID-WAY IN THE LEVELING BRICK OR COLLAR.
4. EITHER STEPS, LADDERS OR A COMBINATION OF THE TWO CAN BE USED. IF BOTH STEPS AND LADDERS ARE USED IN ANY MH, THEY SHALL BE FROM THE SAME MANUFACTURER.
5. STEP ON OPPOSITE SIDE OF MH SHALL BE PLACED MID WAY BETWEEN STEPS ON OPPOSING SIDE.

REF STD SPEC SEC 7-05

City of Seattle	NOT TO SCALE	MAINTENANCE HOLE LADDER, STEP AND HANDHOLD

REV DATE: JUN 2010

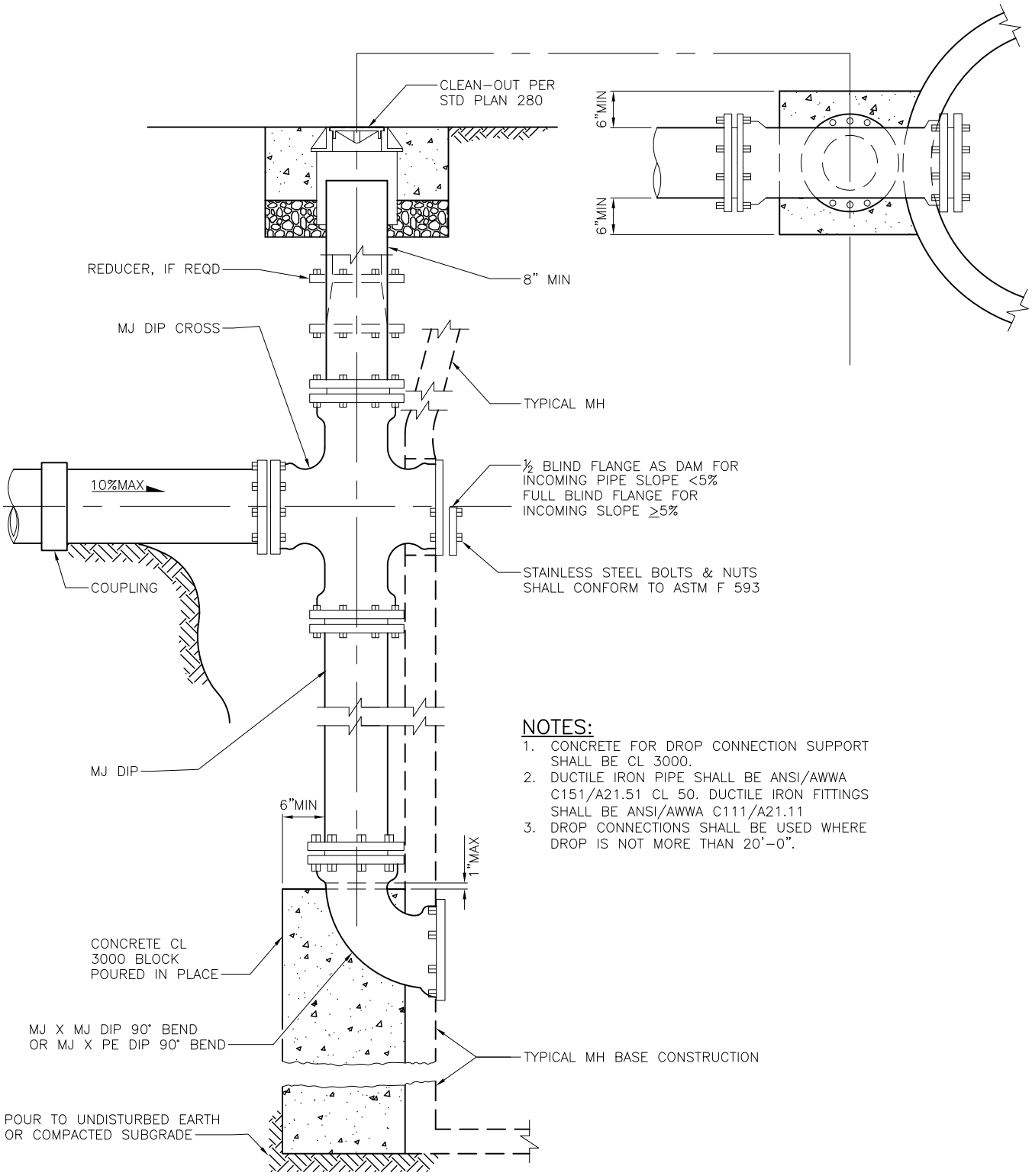

NOTES:

1. CONCRETE FOR DROP CONNECTION SUPPORT SHALL BE CL 3000.
2. DUCTILE IRON PIPE SHALL BE ANSI/AWWA C151/A21.51 CL 50. DUCTILE IRON FITTINGS SHALL BE ANSI/AWWA C111/A21.11
3. DROP CONNECTIONS SHALL BE USED WHERE DROP IS NOT MORE THAN 20'–0".

DUCTILE IRON OUTSIDE DROP CONNECTION

REF STD SPEC SEC 7-08

City of Seattle	NOT TO SCALE	OUTSIDE DROP CONNECTION

REV DATE: 2005

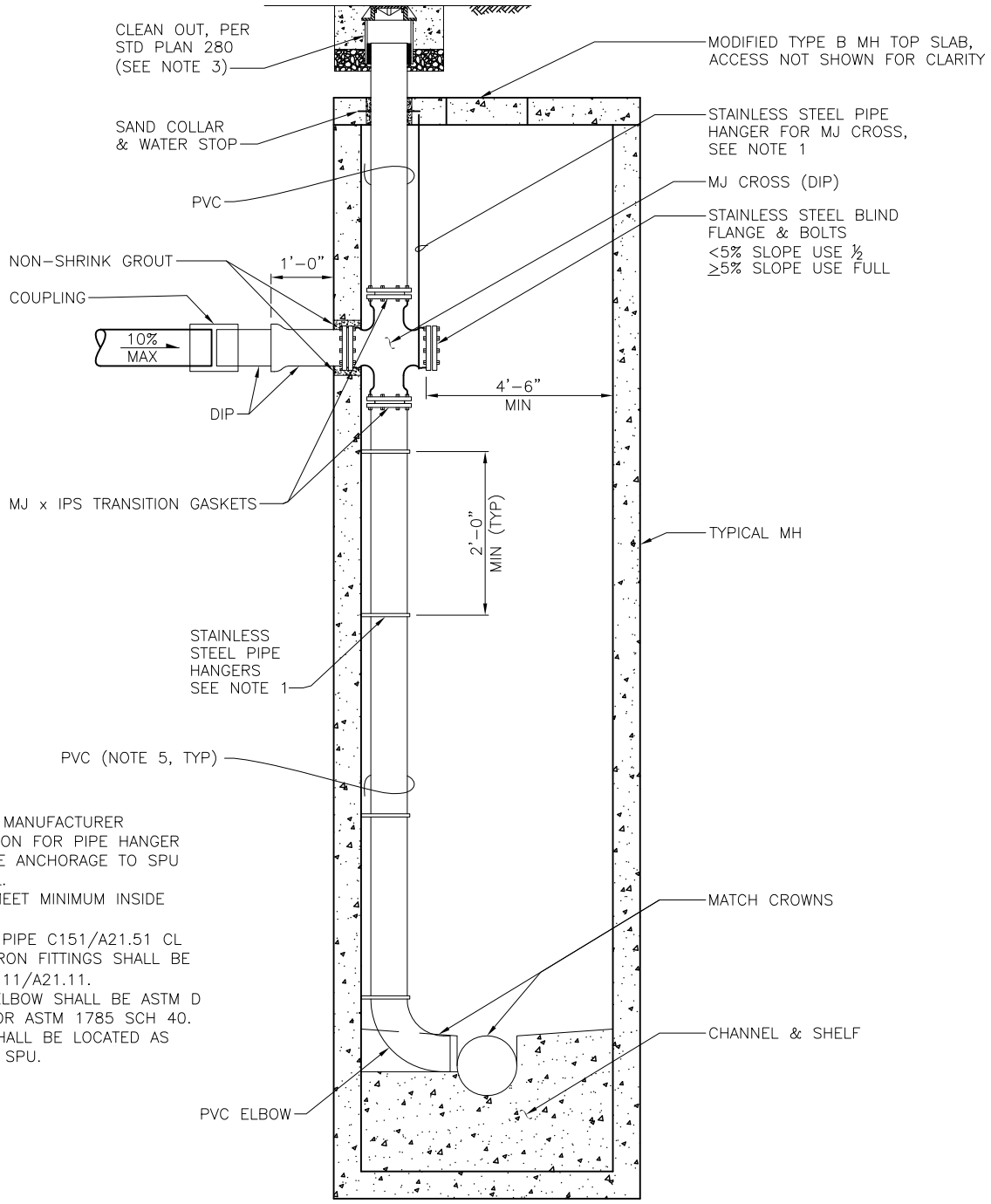

NOTES:

1. PROVIDE PIPE MANUFACTURER RECOMMENDATION FOR PIPE HANGER AND CONCRETE ANCHORAGE TO SPU FOR APPROVAL.
2. SIZE MH TO MEET MINIMUM INSIDE CLEARANCE.
3. DUCTILE IRON PIPE C151/A21.51 CL 50, DUCTILE IRON FITTINGS SHALL BE ANSI/AWWA 6111/A21.11.
4. PVC PIPE & ELBOW SHALL BE ASTM D 2241 CL200 OR ASTM 1785 SCH 40.
5. CLEAN-OUT SHALL BE LOCATED AS APPROVED BY SPU.

INSIDE DROP

(18" DIAMETER PIPE MAXIMUM)

REF STD SPEC SEC 7-08

City of Seattle	NOT TO SCALE	INSIDE DROP CONNECTION

REV DATE: JUN 2010

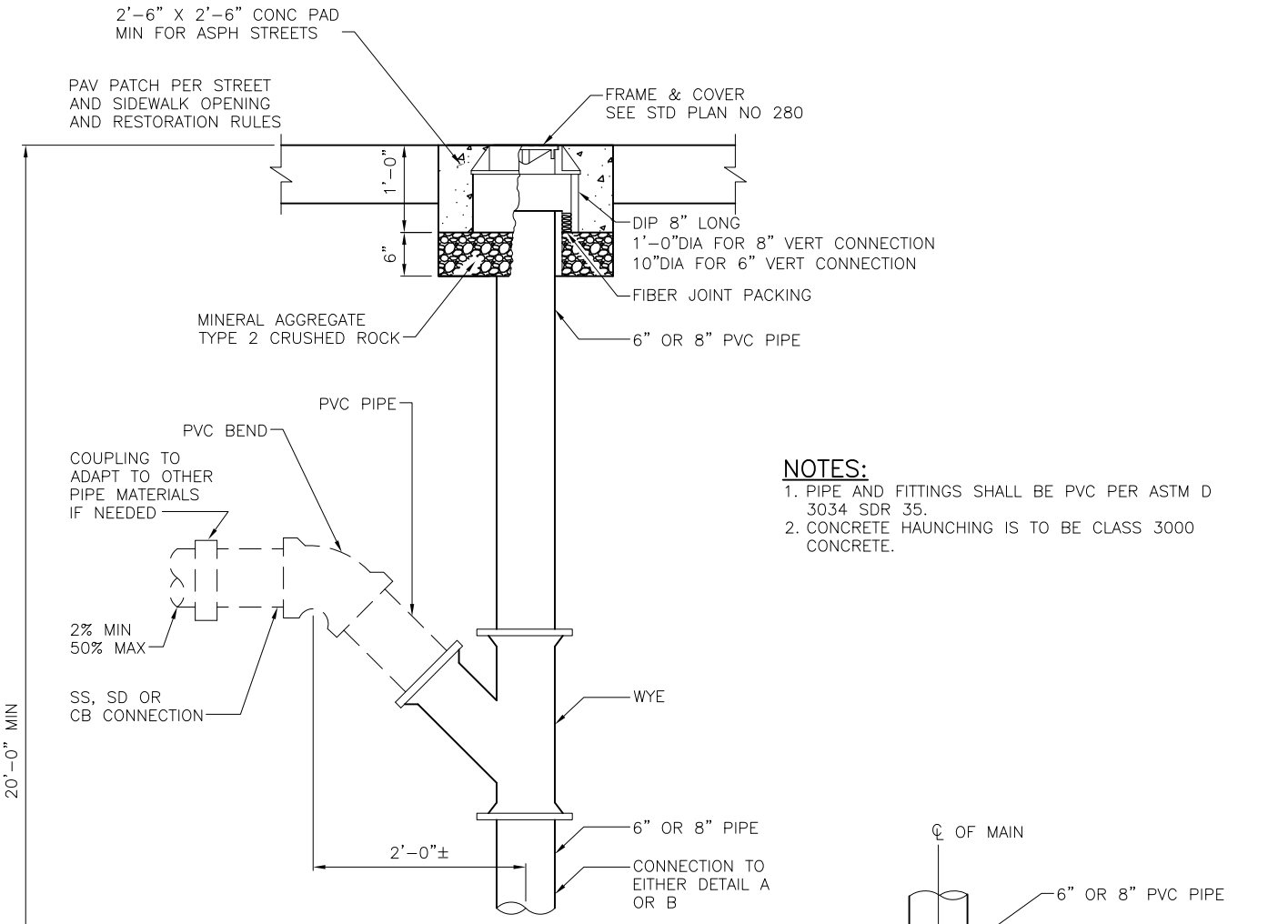

NOTES:

1. PIPE AND FITTINGS SHALL BE PVC PER ASTM D 3034 SDR 35.
2. CONCRETE HAUNCHING IS TO BE CLASS 3000 CONCRETE.

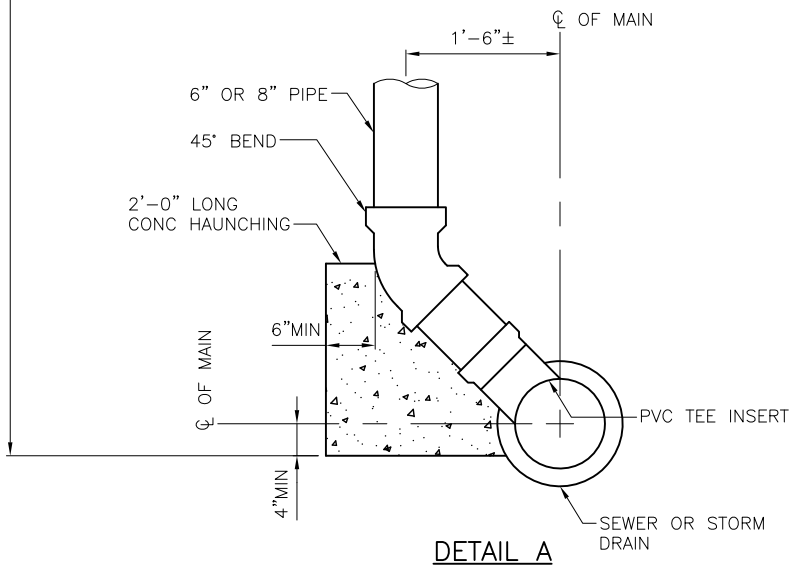

DETAIL A

FOR MAIN 3'–0"DIA OR SMALLER

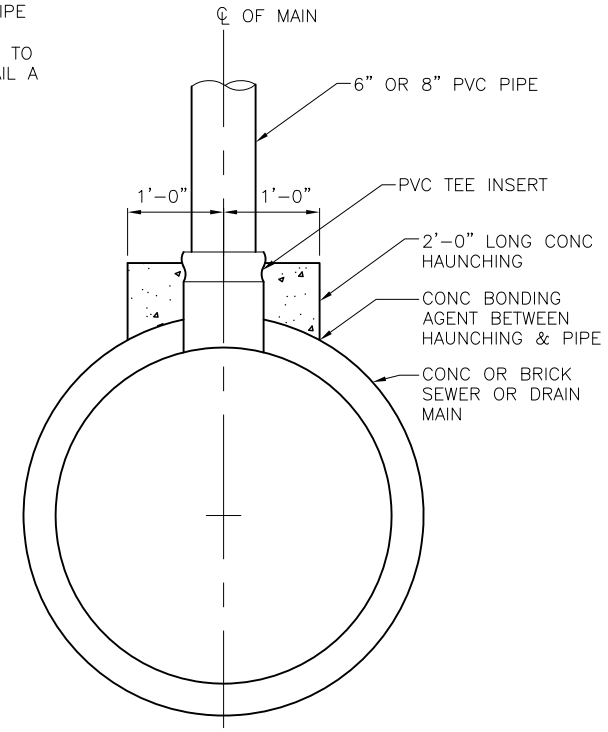

DETAIL B

FOR MAIN 3'–6"DIA OR LARGER

REF STD SPEC SEC 7-08 & 7-17

City of Seattle	NOT TO SCALE	6" OR 8" VERTICAL CONNECTION

REV DATE: JAN 2013

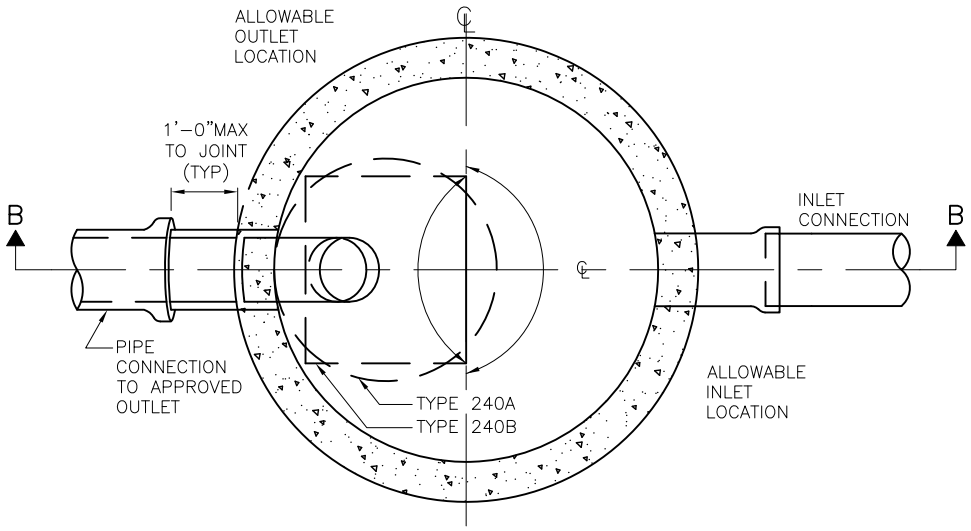

SECTION A–A

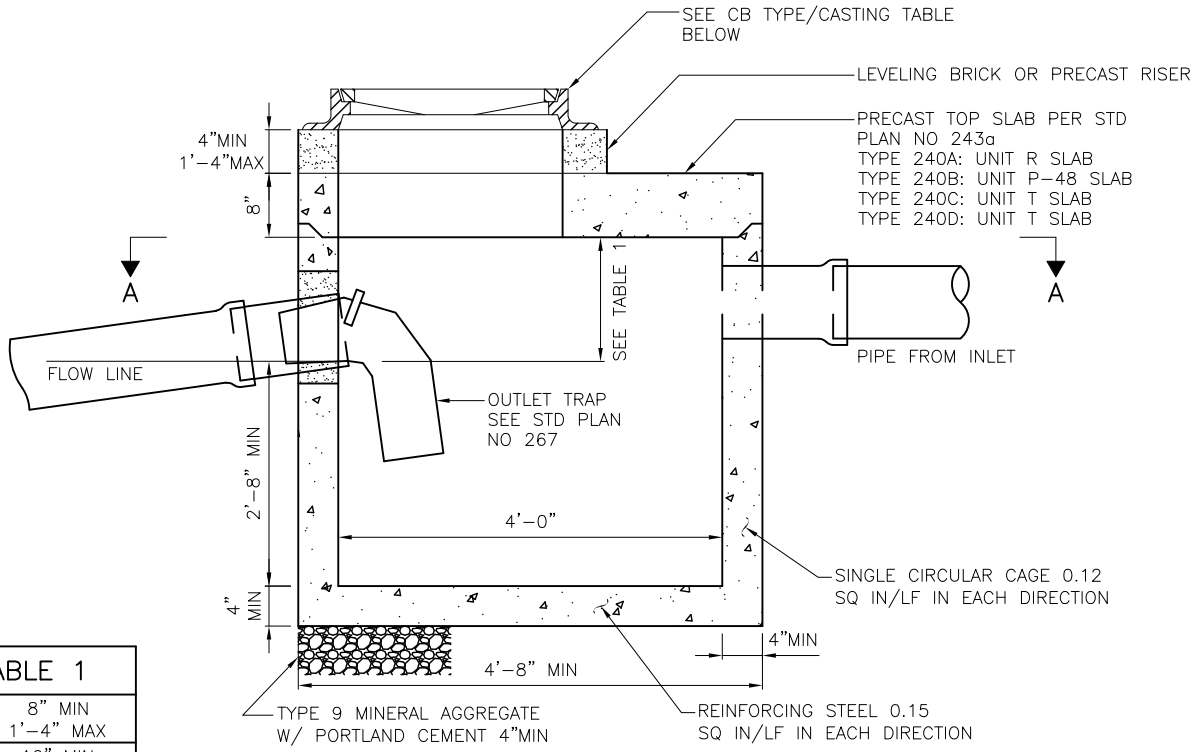

SECTION B–B

TABLE 1	
6"ø	8" MIN 1'-4" MAX
8"ø	10" MIN 1'-4" MAX
12"ø	1'-3" MIN 2'-0" MAX

NOTES:

1. FRAME & GRATE OR FRAME & COVER SHALL BE LOCATED OVER TRAP.
2. INVERT OF INLET PIPE SHALL BE 2"MIN ABOVE INVERT OF OUTLET PIPE.
3. SEE STD PLAN 261 FOR ALLOWABLE OUTLET LOCATIONS.

CB TYPE	CASTING	
	FRAME	COVER
240A	PER STD PLAN 230	PER STD PLAN 230
240B	PER STD PLAN 264	PER STD PLAN 264
240C	PER STD PLAN 262	PER STD PLAN 265
240D	PER STD PLAN 263	PER STD PLAN 265

REF STD SPEC SEC 7-05

City of Seattle | NOT TO SCALE | TYPE 240 CATCH BASIN

REV DATE: NOV 2012

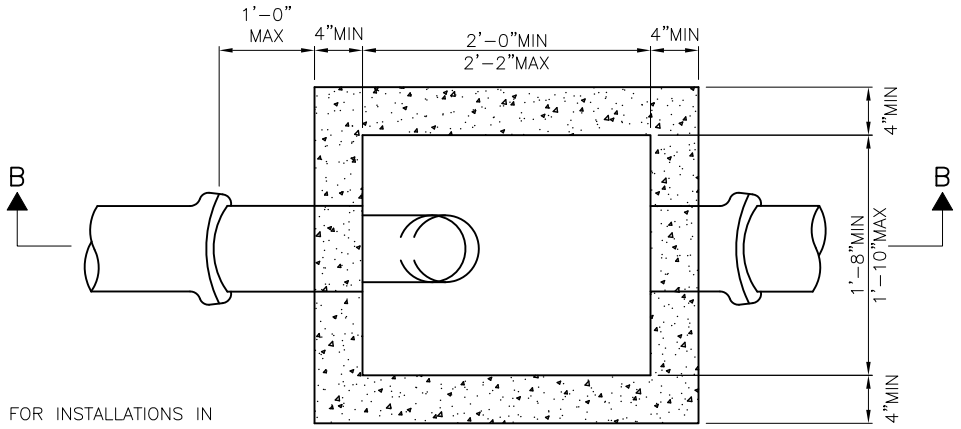

SECTION A–A

NOTES:

1. THIS CATCH BASIN IS FOR INSTALLATIONS IN ALLEYS AND UNPAVED AREAS IN THE RIGHT–OF–WAY. ANY OTHER USE IN THE R/W WILL REQUIRE THE APPROVAL OF SPU.
2. FOR CURB DISCHARGE INSTALLATION SEE STD PLAN NO 241b.
3. INSTALL PER STD PLAN NO 261.
4. MATERIAL: CONCRETE CLASS 4000 REINFORCING STEEL ASTM A615 GR60.
5. INLET INVERT EL. TO BE HIGHER THAN OUTLET INVERT EL.
6. USE OF LEVELING BRICKS SHALL BE RUNNING BOND PATTERN WITH ¼ TO ½ GROUT IN BETWEEN BRICKS.

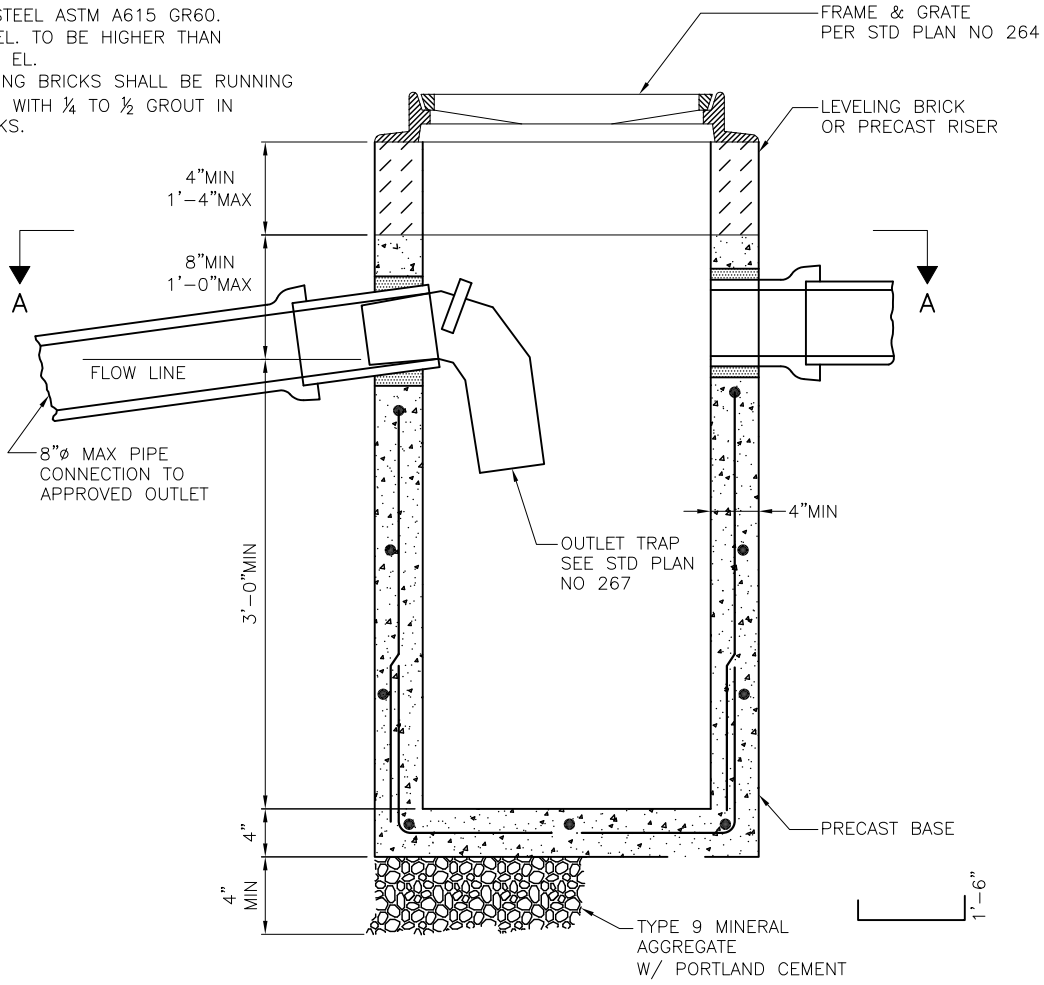

SECTION B–B

REF STD SPEC SEC 7-05

City of Seattle	NOT TO SCALE	TYPE 241 CATCH BASIN

REV DATE: 2005

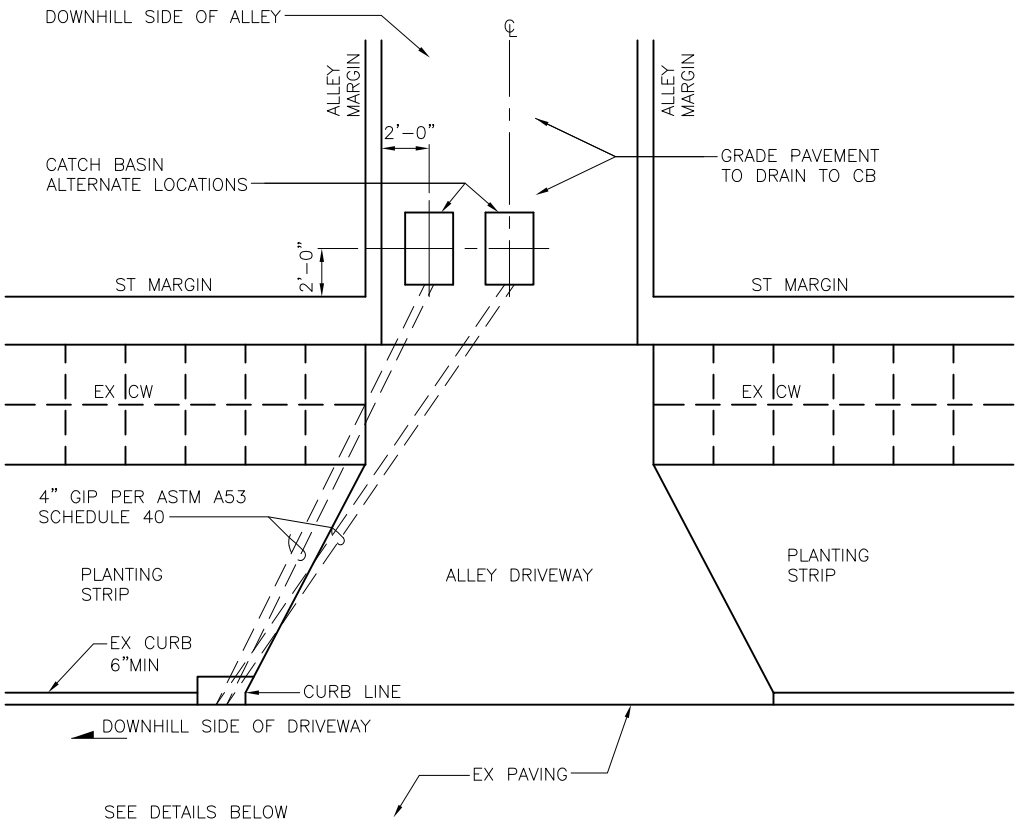

PLAN

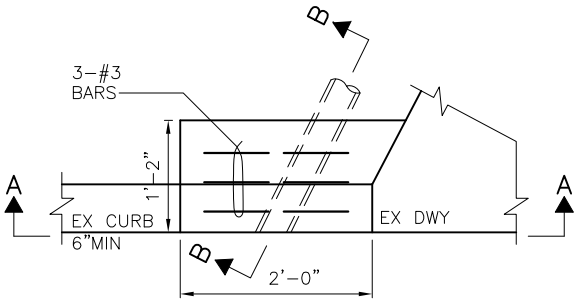

PLAN

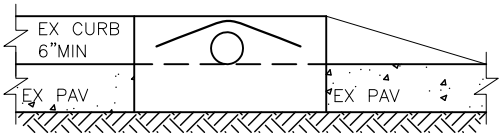

SECTION A–A

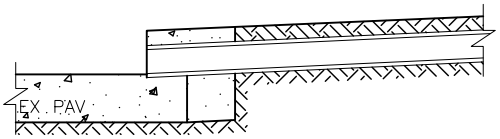

SECTION B–B

REF STD SPEC SEC 7-05 & 7-08

City of Seattle	NOT TO SCALE	TYPE 241 CATCH BASIN INSTALLATIONS

REV DATE: JUL 2012

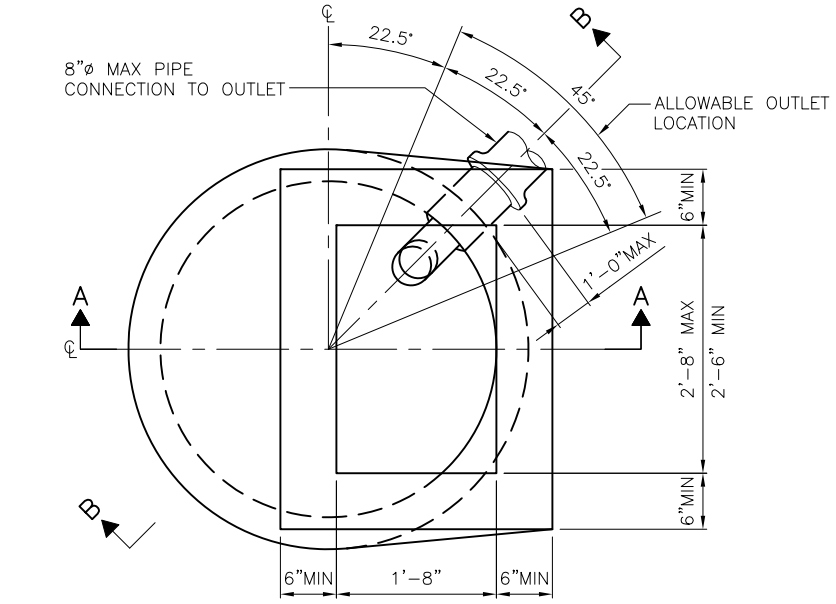

PLAN VIEW

CB TYPE	CASTING	
	FRAME	GRATE
A	NO 262	NO 265
B	NO 263	NO 265

NOTES:

1. MATERIAL: CONCRETE: CLASS 4000
   REINFORCING STEEL: ASTM A 615 GR 60
2. INSTALL & LOCATE PER STD PLANS NO 260 & 261
3. OUTLET TRAP TO BE LOCATED DIRECTLY BELOW FRAME AND GRATE
4. USE OF LEVELING BRICKS SHALL BE RUNNING BOND PATTERN WITH ¼ TO ½ GROUT IN BETWEEN BRICKS.

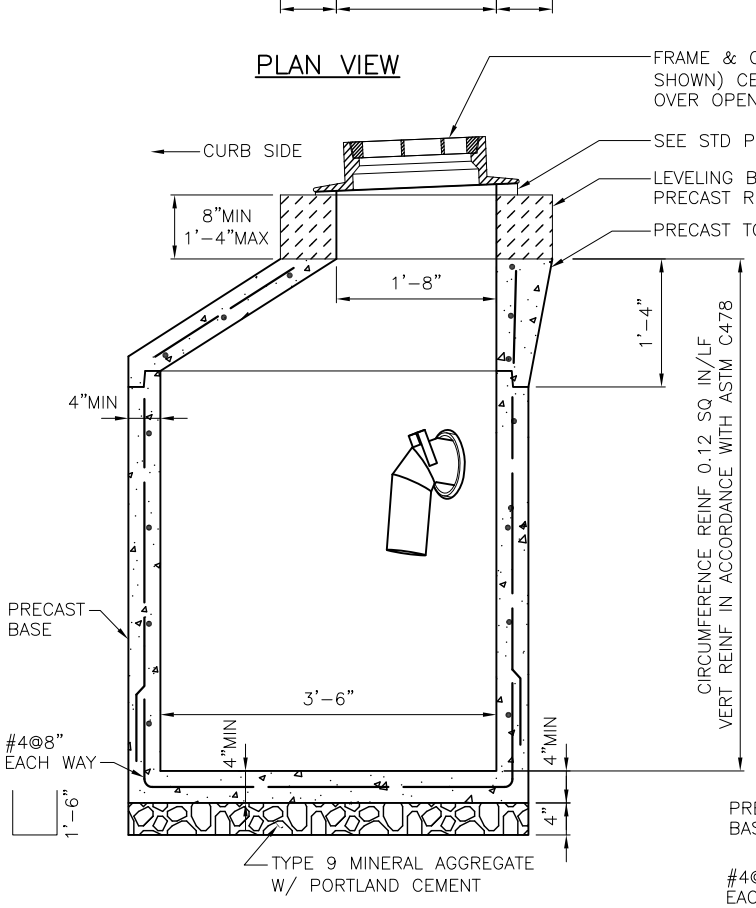

TYPE A
SECTION A–A

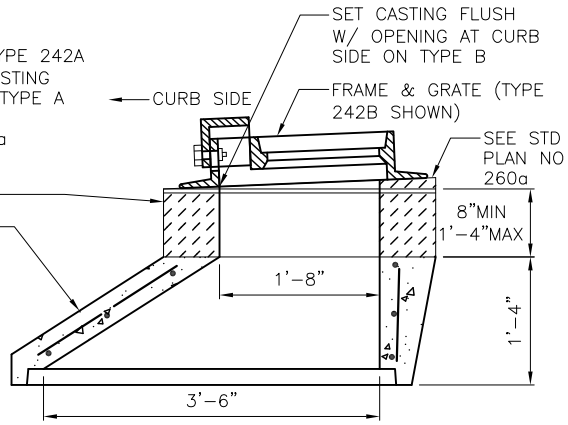

TYPE B
SECTION A–A

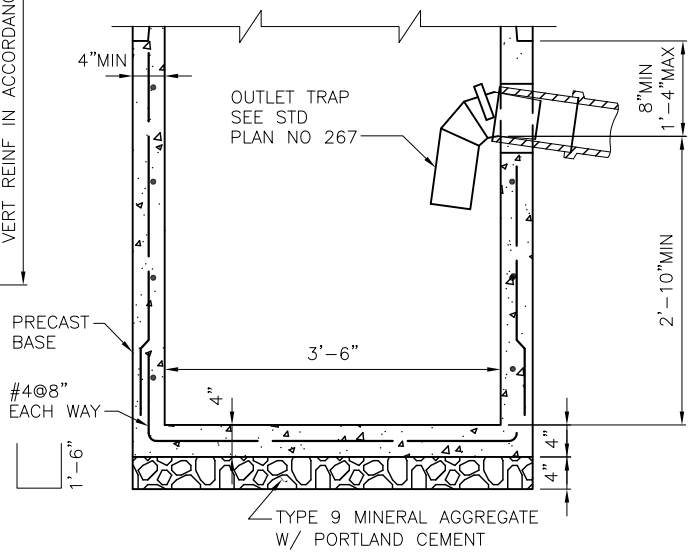

TYPE A & B
SECTION B–B

REF STD SPEC SEC 7-05

City of Seattle	NOT TO SCALE	TYPE 242 CATCH BASIN

REV DATE: SEPT 2008

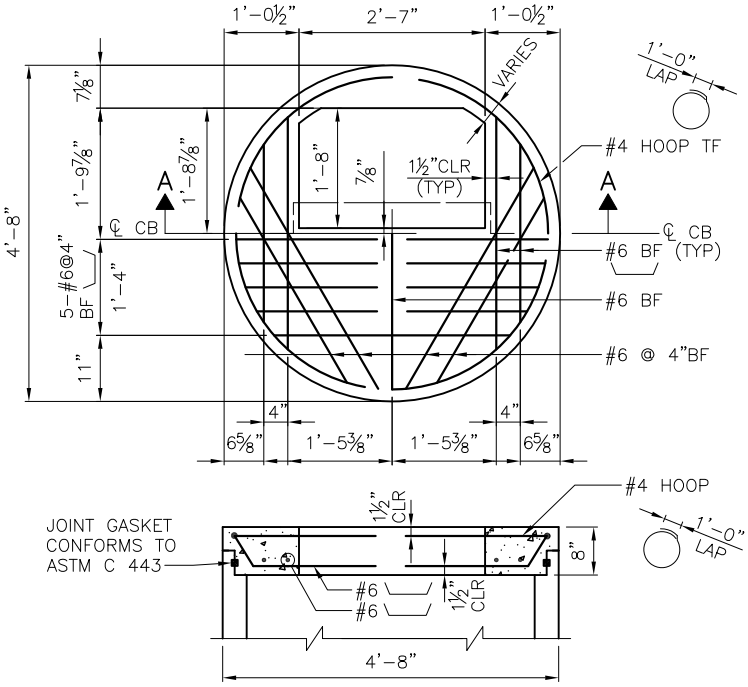

UNIT T

SECTION A-A

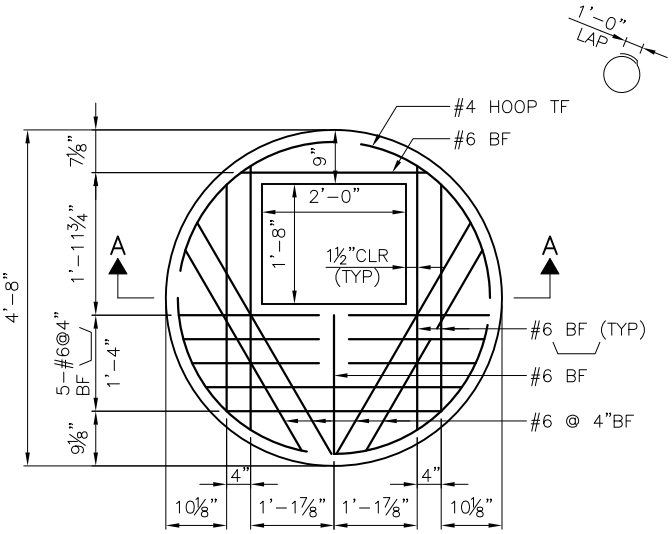

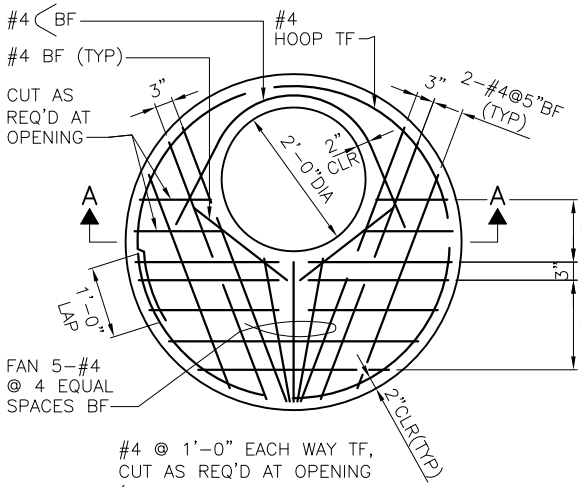

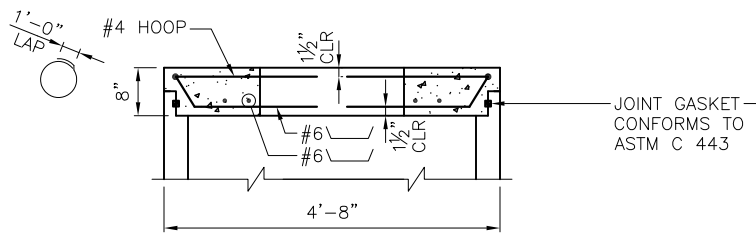

UNIT P-48

SECTION A-A

UNIT R

SECTION A-A

REF STD SPEC SEC 7-05

City of Seattle	NOT TO SCALE	PRECAST CATCH BASIN TOP SLAB

REV DATE: 2003

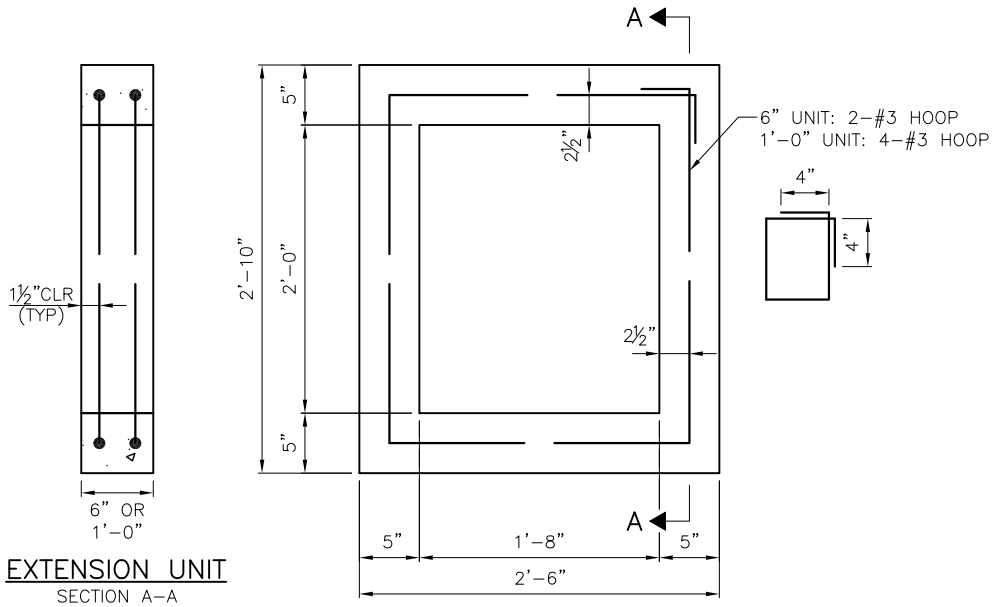

EXTENSION UNIT
SECTION A-A

UNIT S

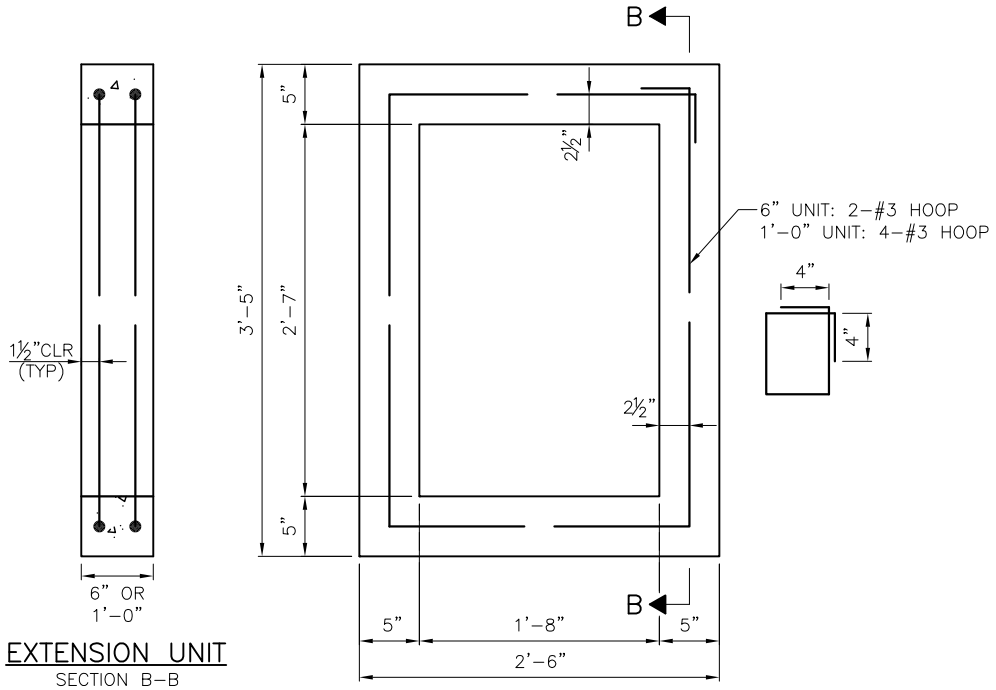

EXTENSION UNIT
SECTION B-B

UNIT U

NOTES:

1. CONCRETE: CLASS 4000
2. REINFORCING STEEL: ASTM A615 GR 60

REF STD SPEC SEC 7-05

City of Seattle	NOT TO SCALE	PRECAST CATCH BASIN EXTENSION RISERS

REV DATE: OCT 2008

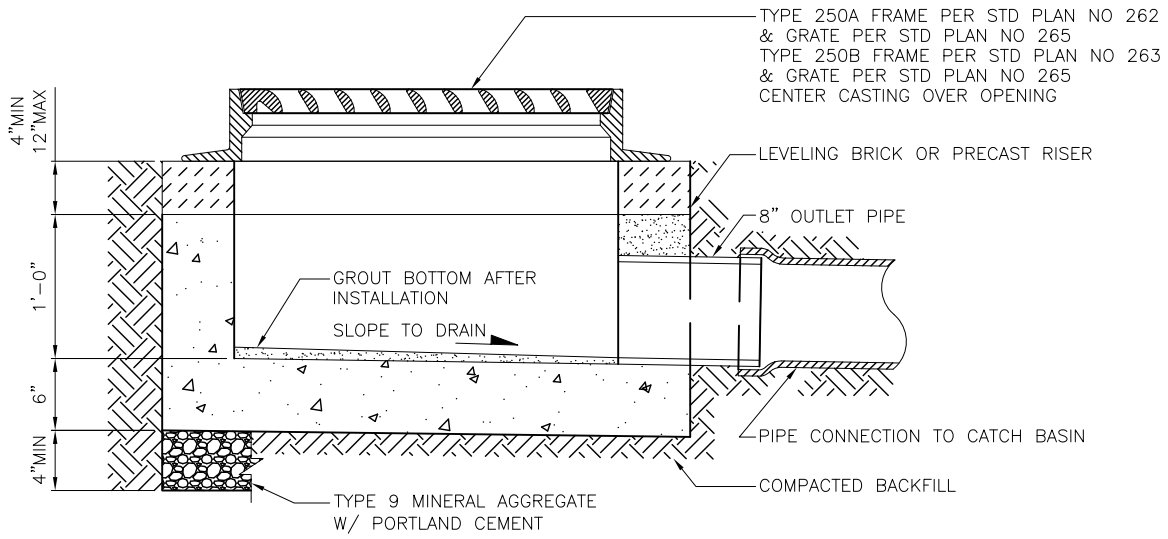

SECTION A–A

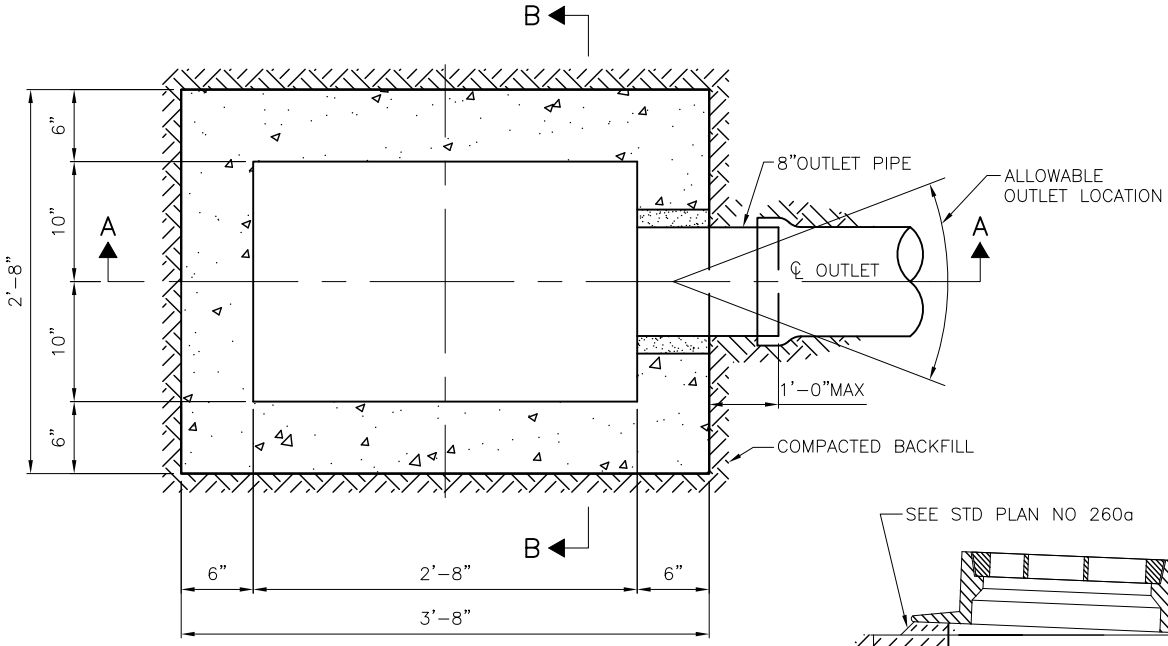

PLAN VIEW

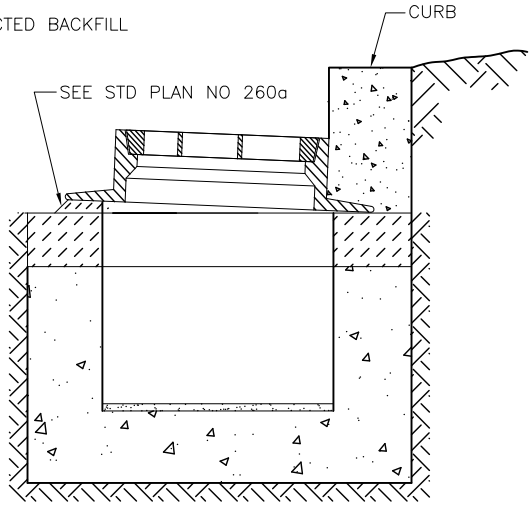

SECTION B–B
TYPE A ONLY

REF STD SPEC SEC 7-05

City of Seattle	NOT TO SCALE	TYPE 250 INLET

REV DATE: DEC 2013

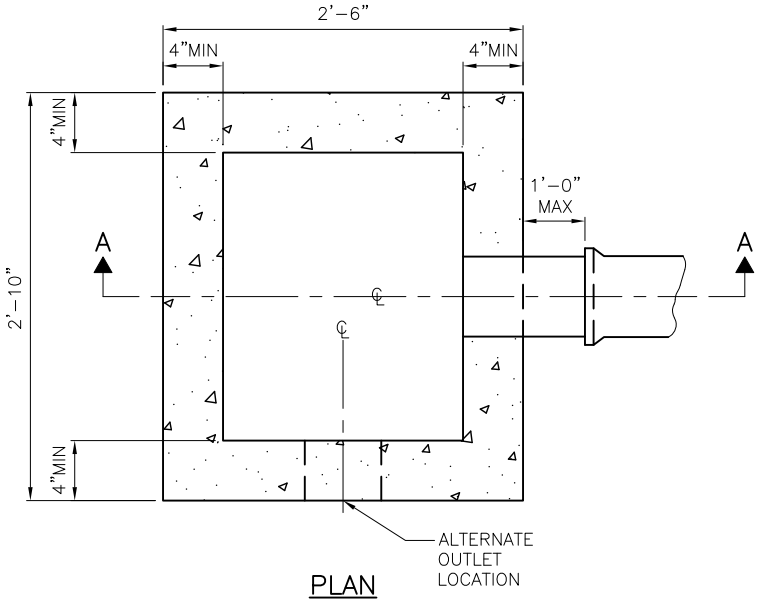

PLAN

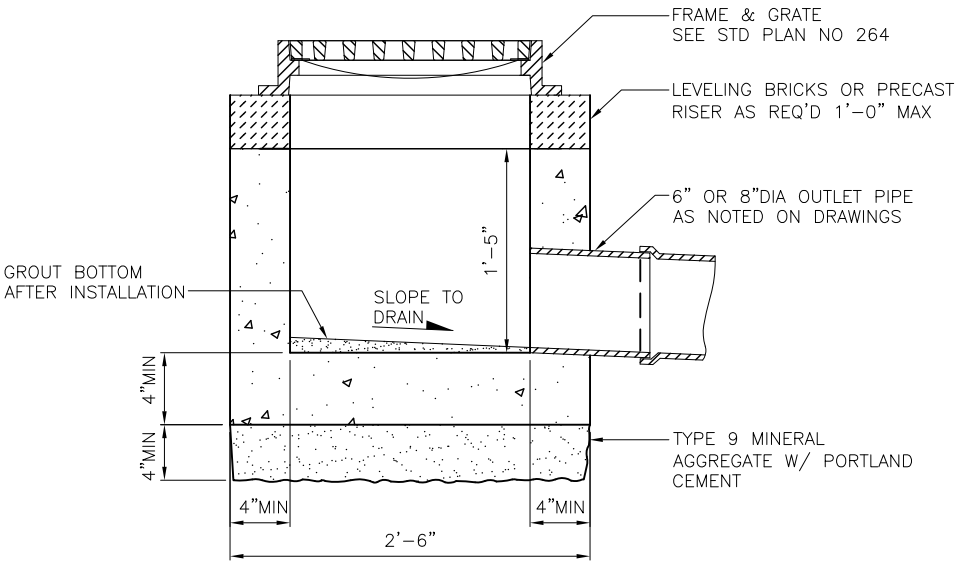

SECTION A–A

REF STD SPEC SEC 7-05

City of Seattle	NOT TO SCALE	TYPE 252 INLET

REV DATE: JAN 2013

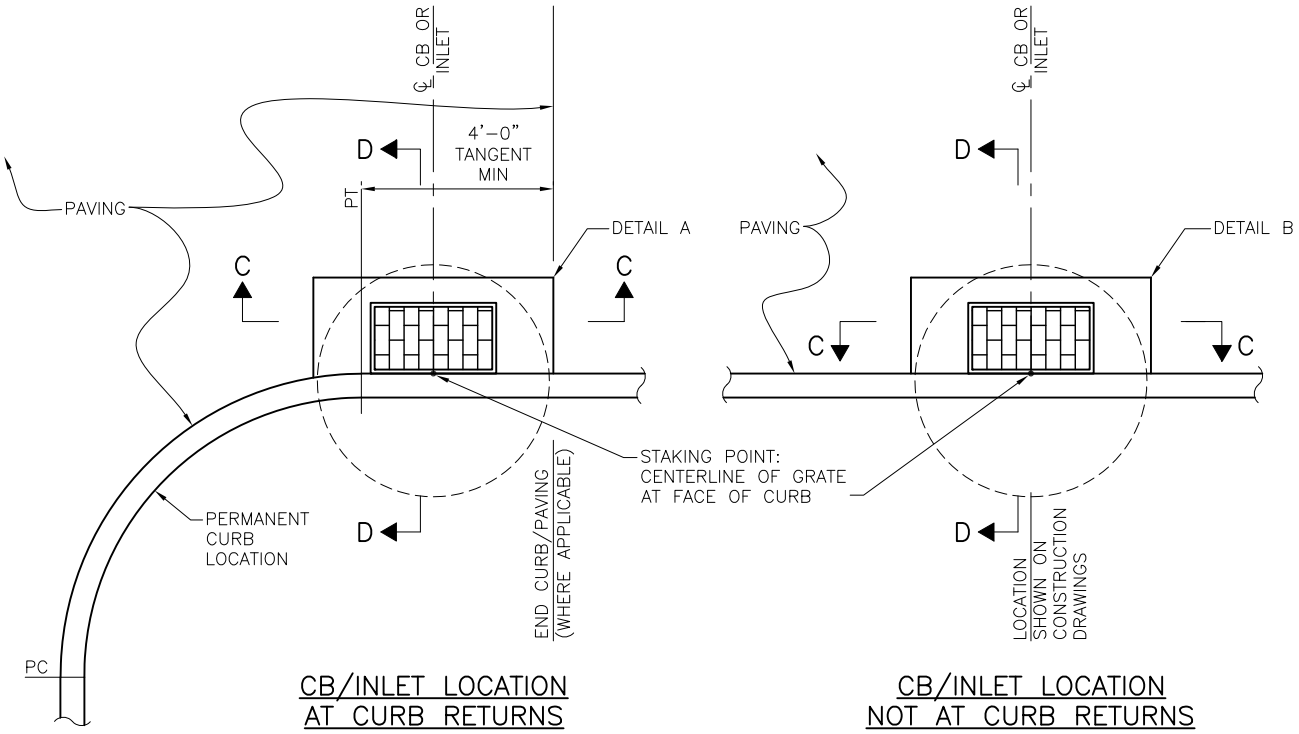

CB/INLET LOCATION AT CURB RETURNS

CB/INLET LOCATION NOT AT CURB RETURNS

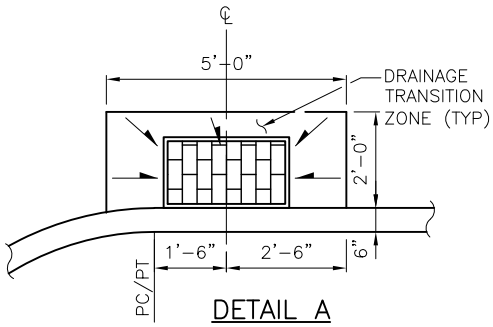

DETAIL A

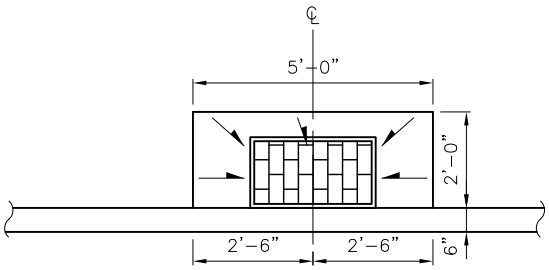

DETAIL B

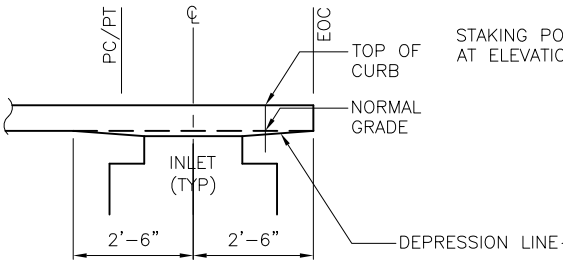

SECTION C–C

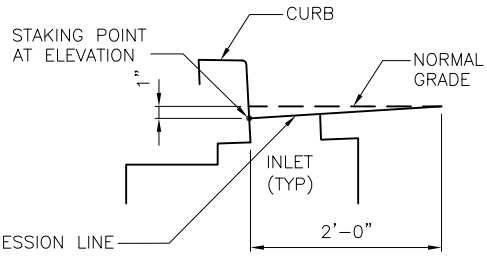

SECTION D–D

NOTES:

1. CB INLET GRATES SHALL NOT BE PLACED IN CROSSWALKS.
2. CB INLETS SHALL NOT BE PLACED IN CURB RAMP LANDINGS.

REF STD SPEC SEC 7-05

City of Seattle	NOT TO SCALE	INLET / CATCH BASIN LOCATION & INSTALLATION

REV DATE: JAN 2013

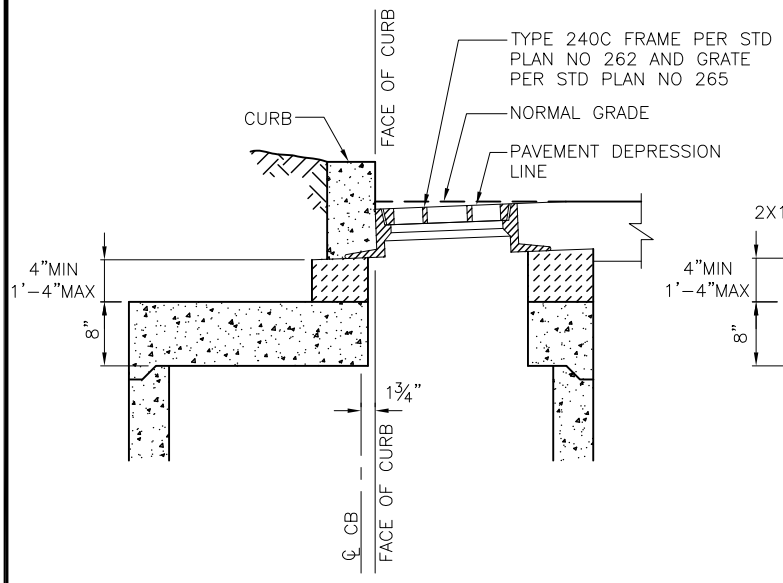

TYPE 240C CB

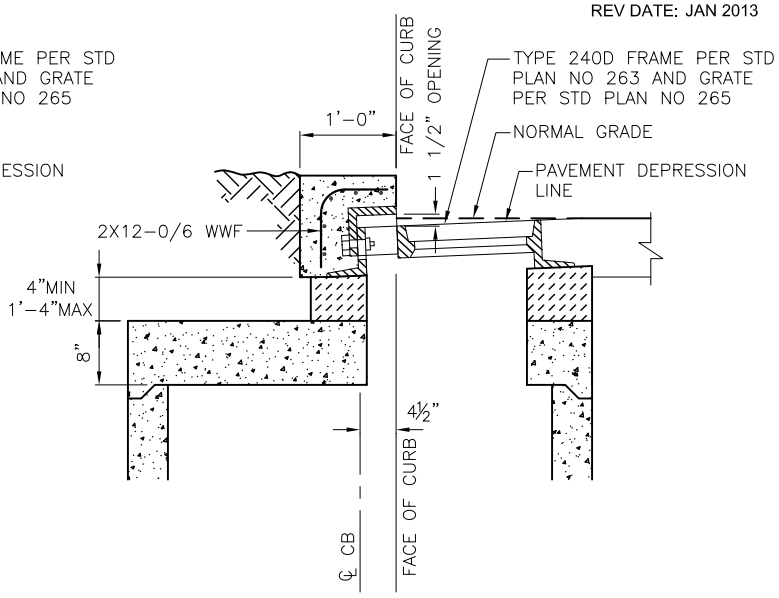

TYPE 240D CB

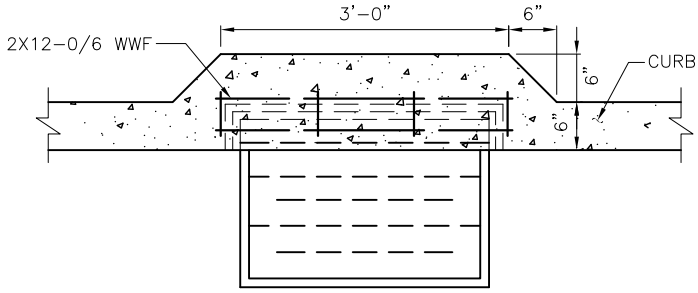

CURB DETAIL (PLAN VIEW) FOR
TYPE 242B CB & TYPE 250B INLET

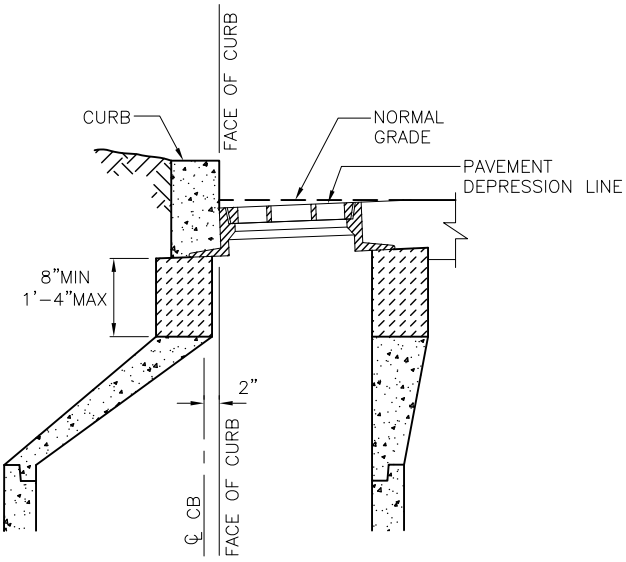

TYPE 242A CB
(TYPE 250A INLET SIMILAR)

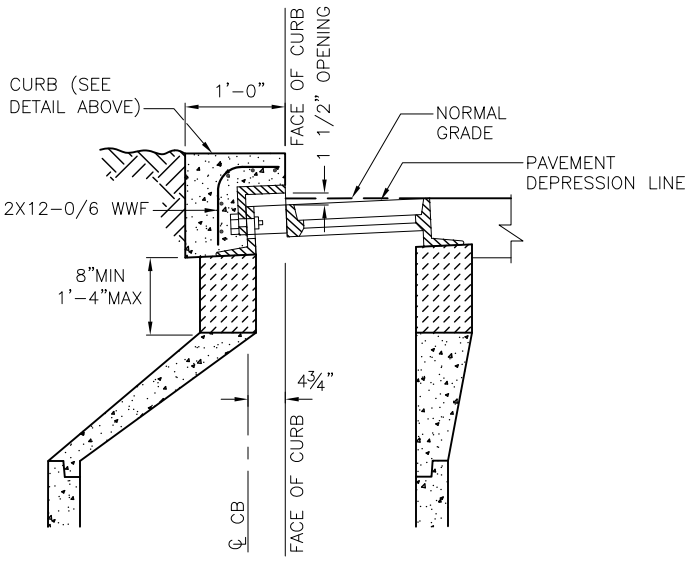

TYPE 242B CB
(TYPE 250B INLET SIMILAR)

REF STD SPEC SEC 7-05

City of Seattle	NOT TO SCALE	CATCH BASIN & INLET INSTALLATION

REV DATE: FEB 2014

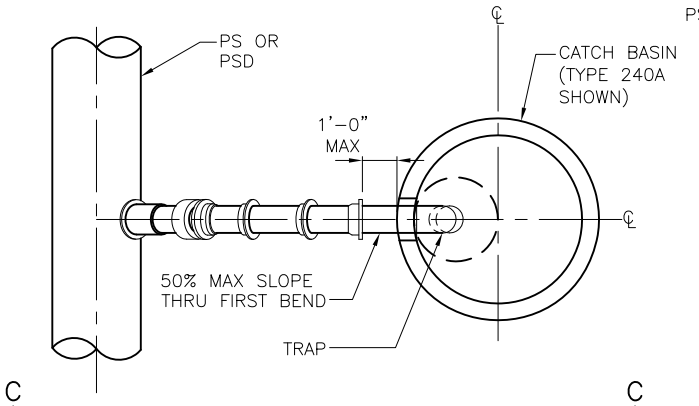

TYPE A

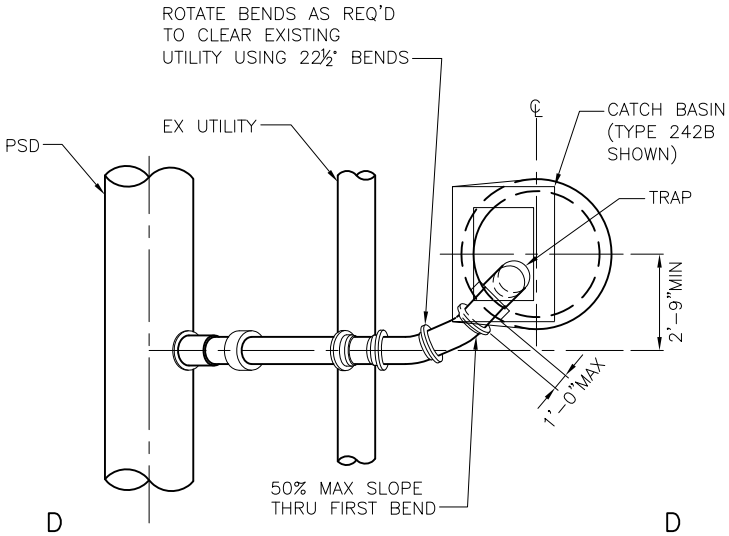

TYPE B

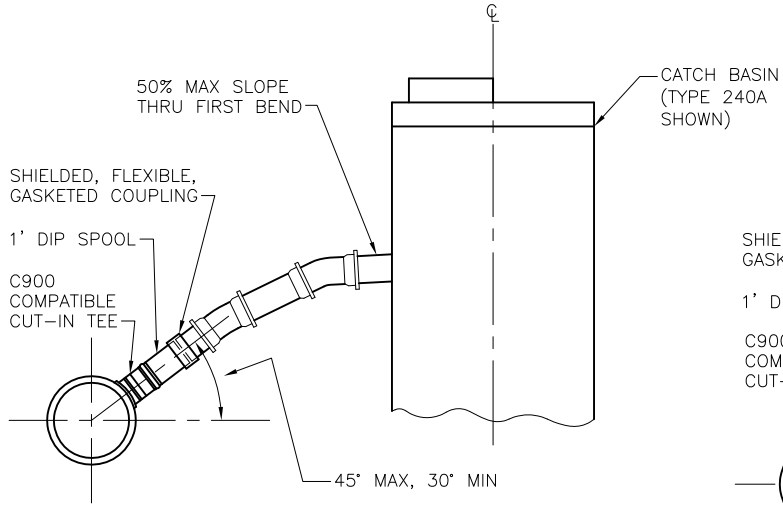

SECTION C–C

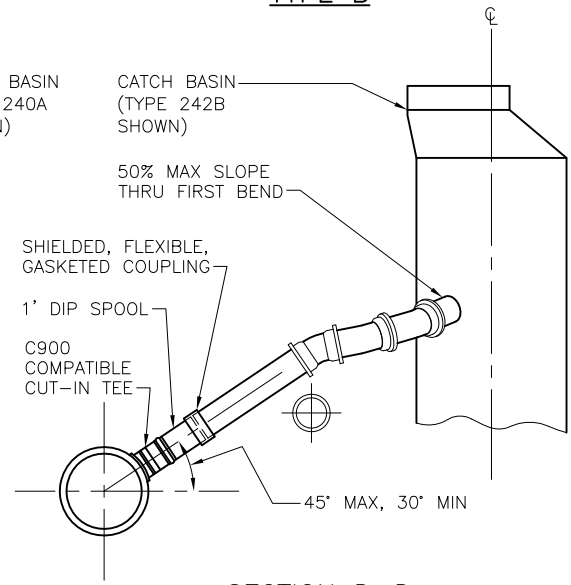

SECTION D–D

NOTES:

1. TYPE A CONNECTIONS SHALL BE USED WITH CB TYPES 240A, 240B AND 241.
2. TYPE B CONNECTIONS SHALL BE USED WITH CB TYPES 240C, 240D, 242A AND 242B.
3. CONNECTIONS SHALL MAINTAIN A MINIMUM OF 2% AND A MAXIMUM OF 100% GRADE.
4. MAX BEND SHALL BE 22½° OR 1/16 BEND. USE OF ⅛ BEND REQUIRES APPROVAL BY SPU.
5. 1' DI SPOOL AND COUPLING REQUIRED WITH CUT-IN TEE.

REF STD SPEC SEC 7-08

City of Seattle	NOT TO SCALE	TYPICAL CATCH BASIN CONNECTION

REV DATE: SEP 2012

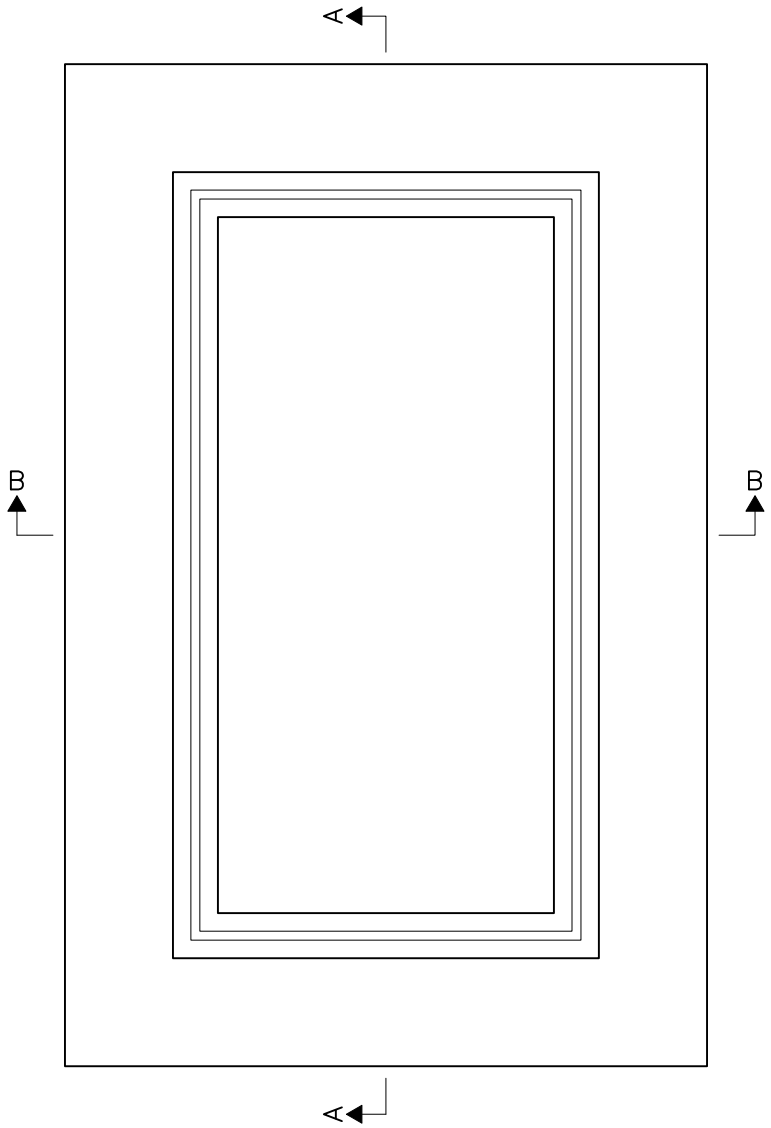

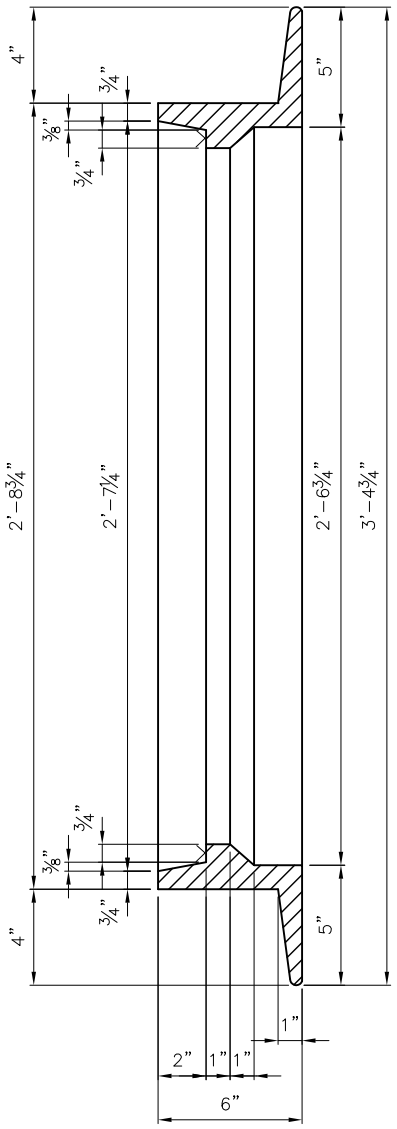

SECTION A–A

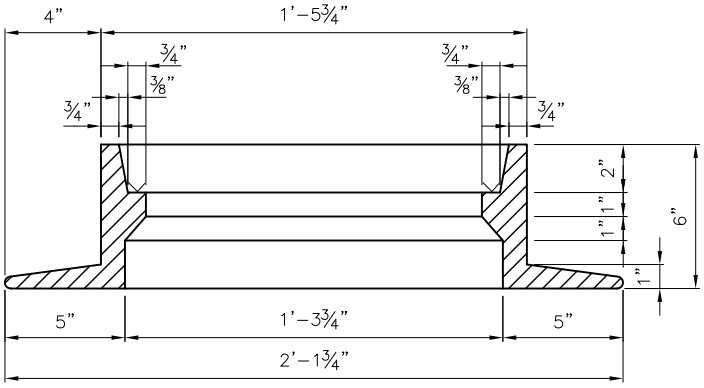

SECTION B–B

REF STD SPEC SEC 9-12

City of Seattle	NOT TO SCALE	TYPE 262 INLET FRAME

REV DATE: SEP 2012

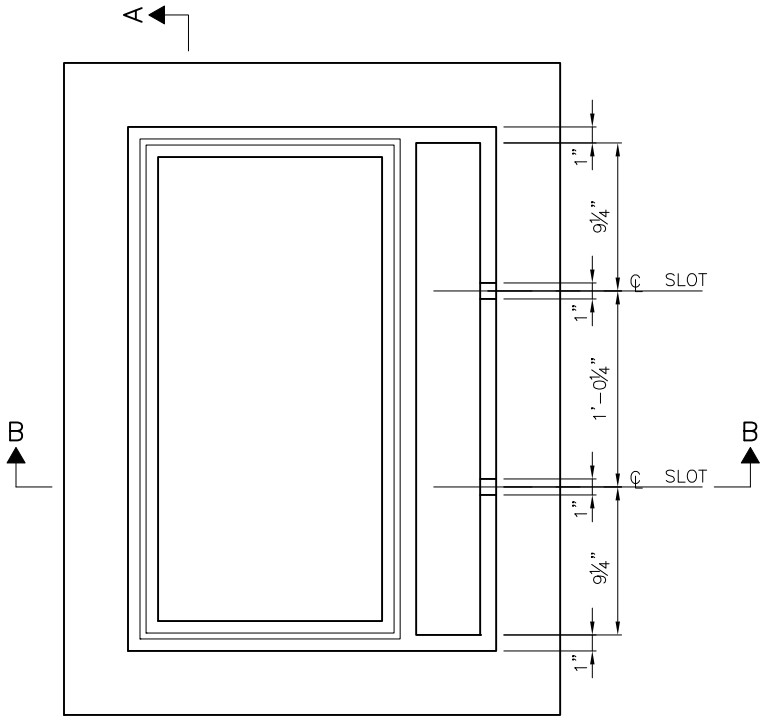

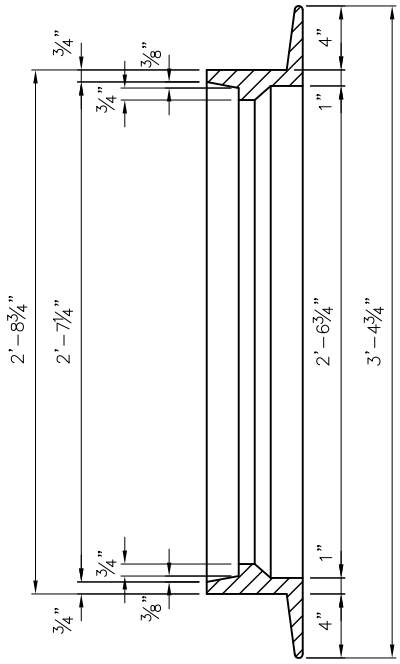

SECTION A–A

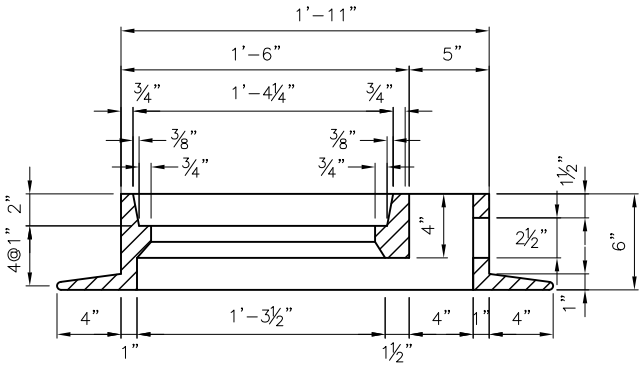

SECTION B–B

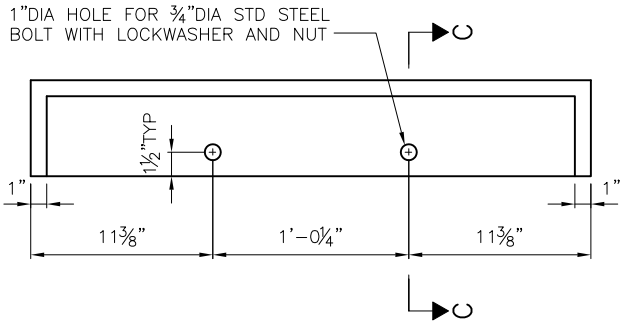

CURB INLET

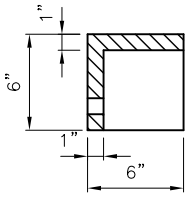

SECTION C–C

REF STD SPEC SEC 9-12

City of Seattle	NOT TO SCALE	TYPE 263 INLET FRAME

REV DATE: MAR 2012

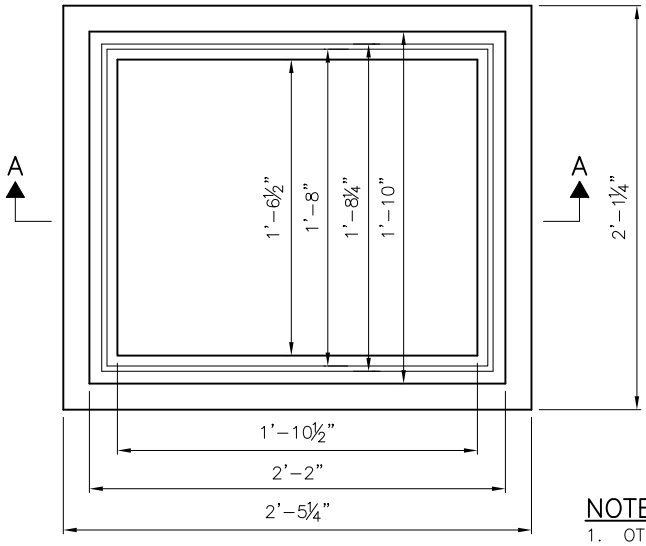

FRAME

NOTES:

1. OTHER GRATES ACCEPTABLE; SPECIFY VANE, SOLID COVER, BI-DIRECTIONAL VANE, ADA OR BEEHIVE ON PLANS.
2. GRATE MATERIAL: DUCTILE IRON

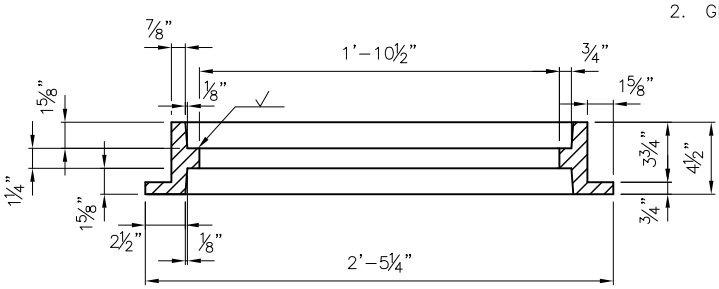

SECTION A-A

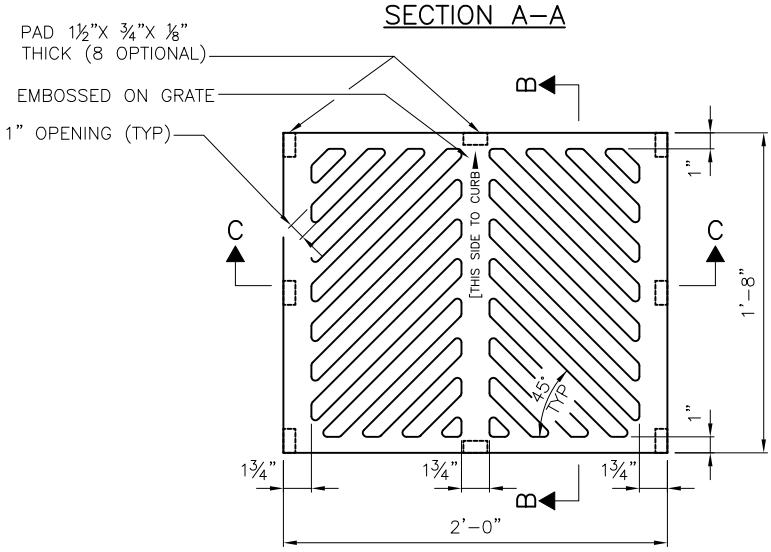

GRATE

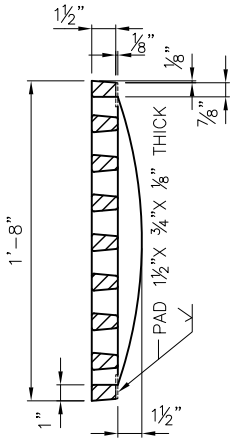

SECTION B-B

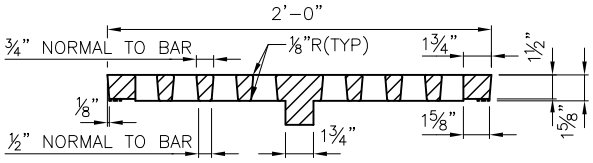

SECTION C-C

REF STD SPEC SEC 7-05

City of Seattle	NOT TO SCALE	INLET FRAME & GRATE

REV DATE: 2003

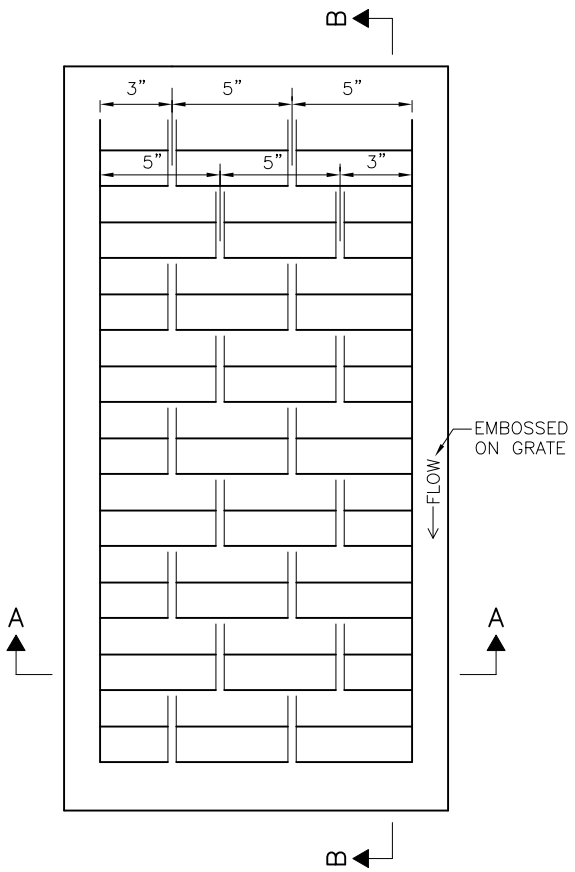

SECTION A–A

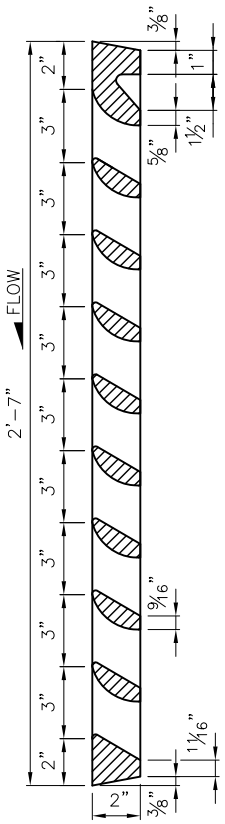

SECTION B–B

GRATE MATERIAL:
DUCTILE IRON

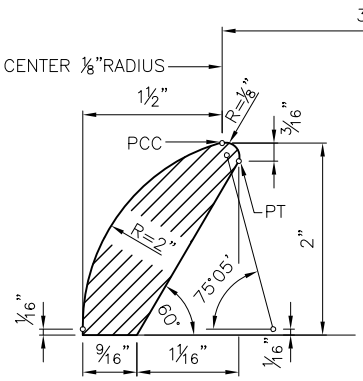

VANE DETAIL

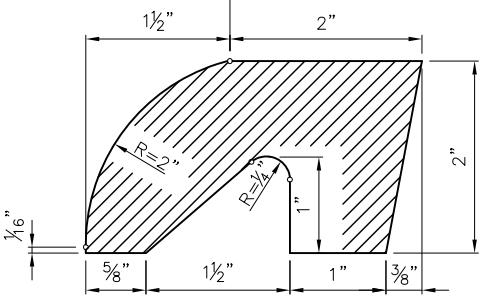

END DETAIL

REF STD SPEC SEC 7-05

City of Seattle	NOT TO SCALE	VANED GRATE

REV DATE: DEC 2010

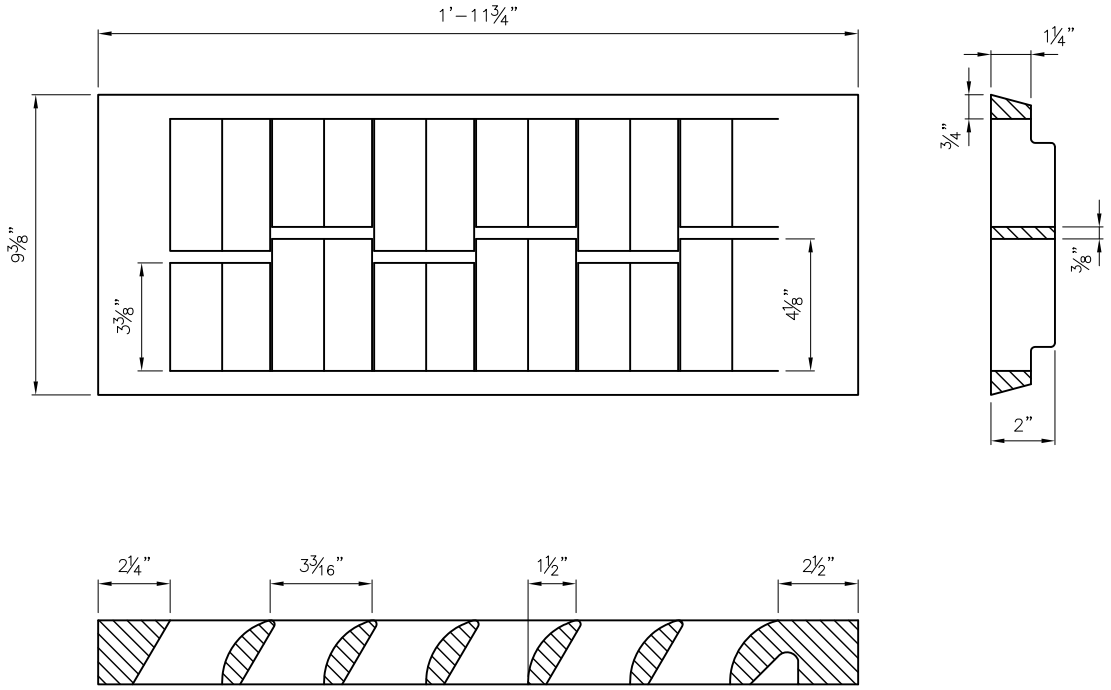

NOTES:

1. OPEN AREA – 100 SQUARE INCHES.
2. SEE STD PLAN NO 265 FOR VANE AND END DETAIL.
3. STD PLAN NO 266 DIMENSIONS GOVERN ON END DETAIL.
4. REPLACEMENT VANED GRATE FOR TYPE 164 INLET FRAMES.

REF STD SPEC SEC 7-20.3(7), 9-12

City of Seattle	NOT TO SCALE	TYPE 266 REPLACEMENT VANED GRATE

REV DATE: DEC 2013

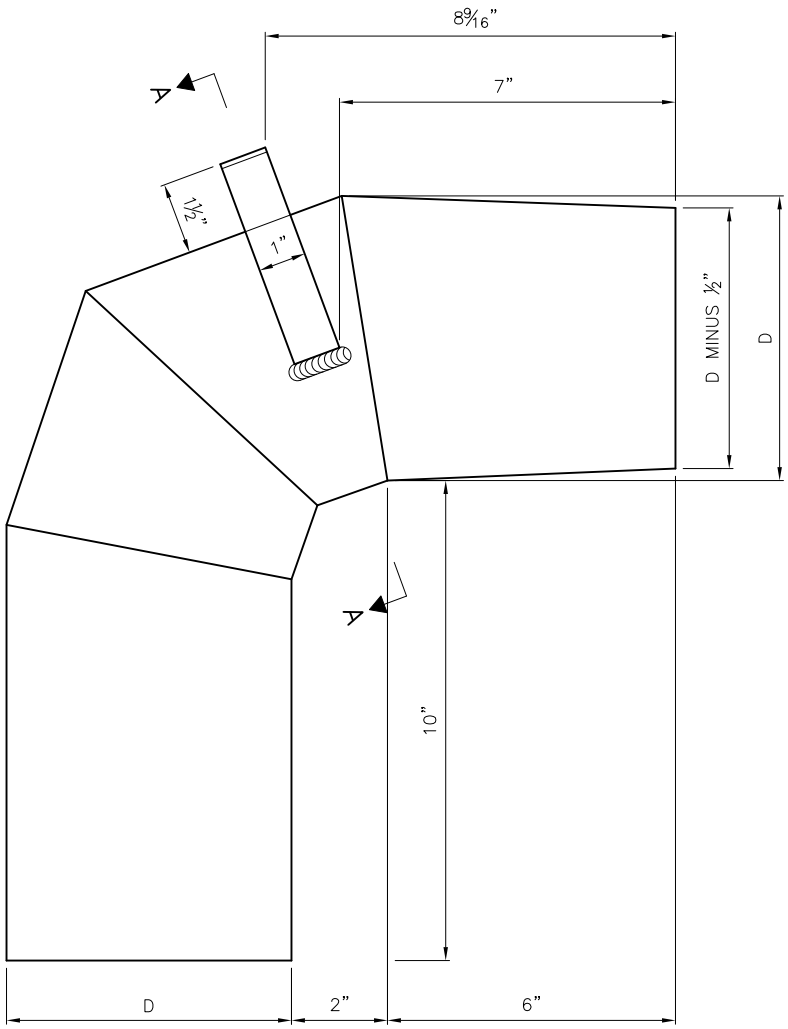

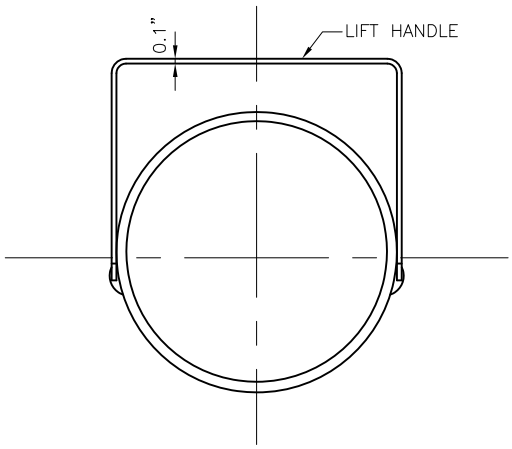

SECTION A–A
NTS

NOTES:

1. TRAP TO BE MADE OF 22 GA SHEET METAL OR 16 GA ALUMINUM
2. ALL JOINTS TO BE SEAMED AND SOLDERED, OR WELDED
3. ALL LONGITUDINAL JOINTS TO BE RIVETED OR WELDED
4. DIAMETER "D" IS NOMINAL DIAMETER OF OUTLET PIPE
5. LIFT HANDLE SHALL BE WELDED TO OUTSIDE OF TRAP (1" WIDE X 0.1" THICK)

REF STD SPEC SEC 9-12

City of Seattle	NOT TO SCALE	OUTLET TRAP

REV DATE: 2008

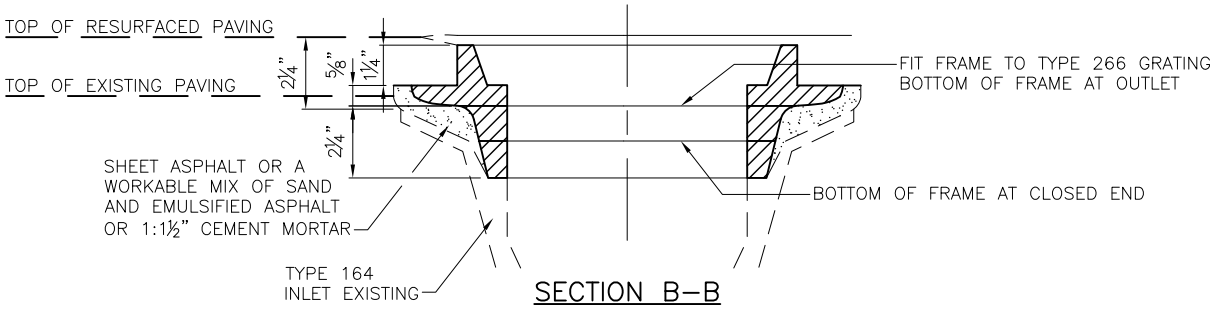

SECTION B–B

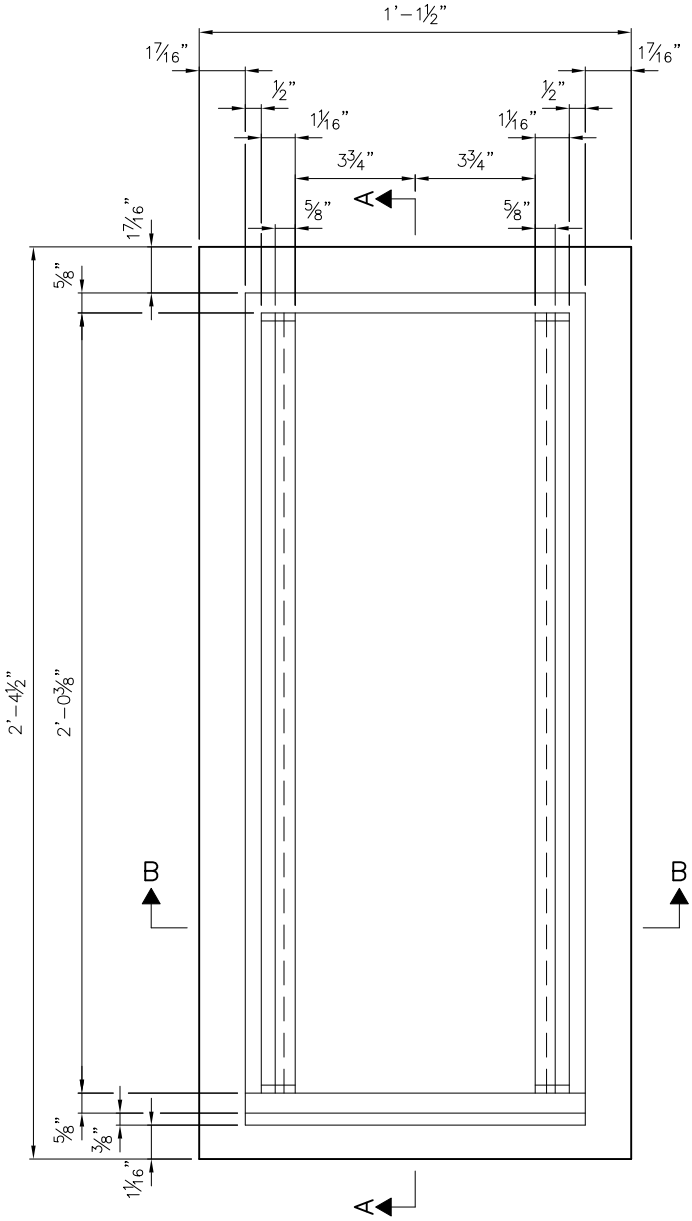

PLAN

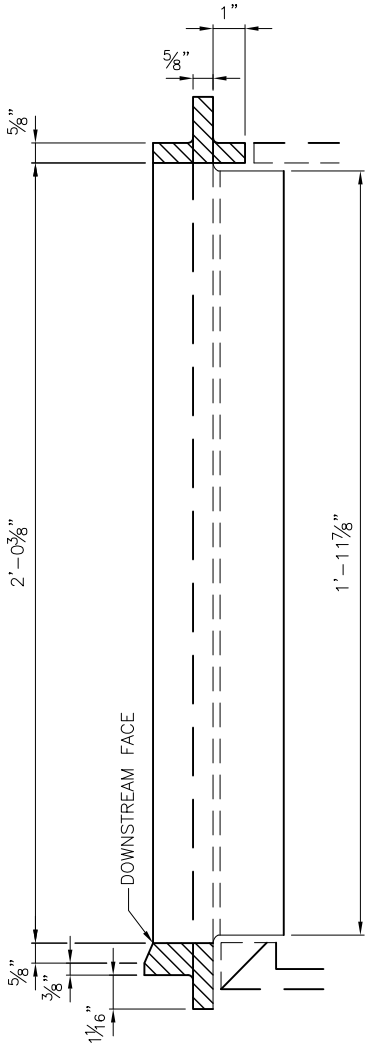

SECTION A–A

THESE DIMENSIONS MAY BE CHANGED IF NECESSARY TO FIT EXISTING CASTINGS

REF STD SPEC SEC 9-05

City of Seattle	NOT TO SCALE	EXTENSION FOR INLET

REV DATE: AUG 2013

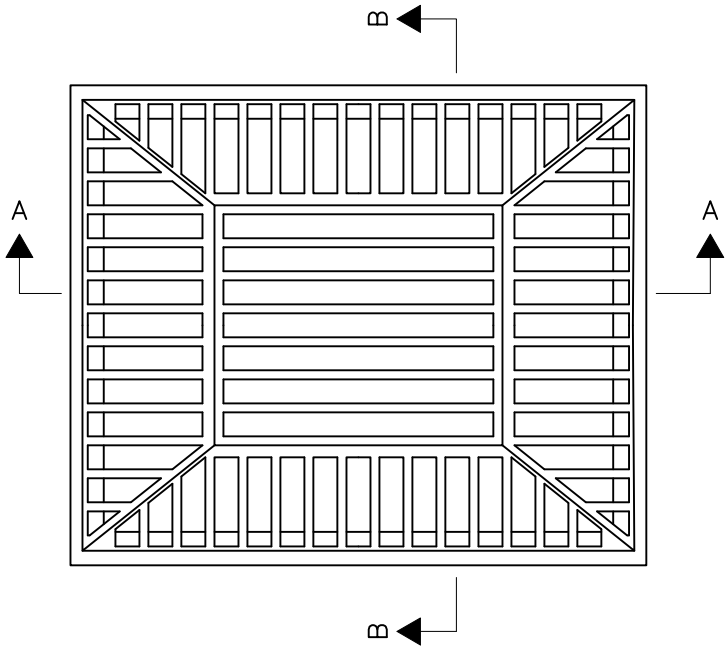

GRATE

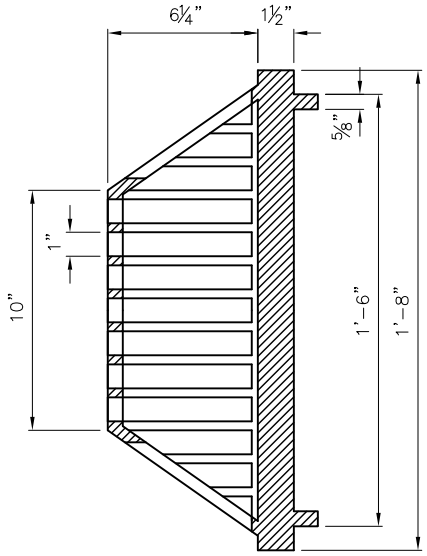

SECTION B–B

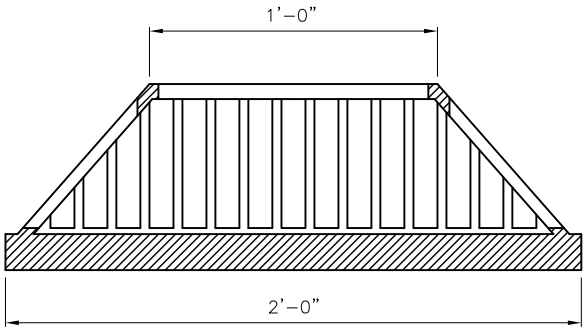

SECTION A–A

NOTES:
1. GRATE MATERIAL: DUCTILE IRON
2. FRAME PER STD PLAN NO 264

REF STD SPEC SEC 9-12

City of Seattle	NOT TO SCALE	BEEHIVE GRATE FOR BIORETENTION

REV DATE: FEB 2014

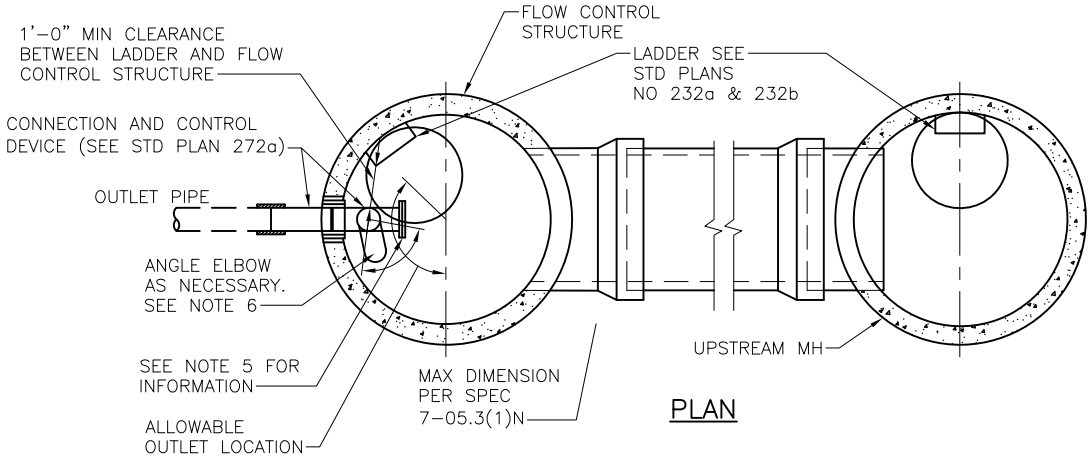

PLAN

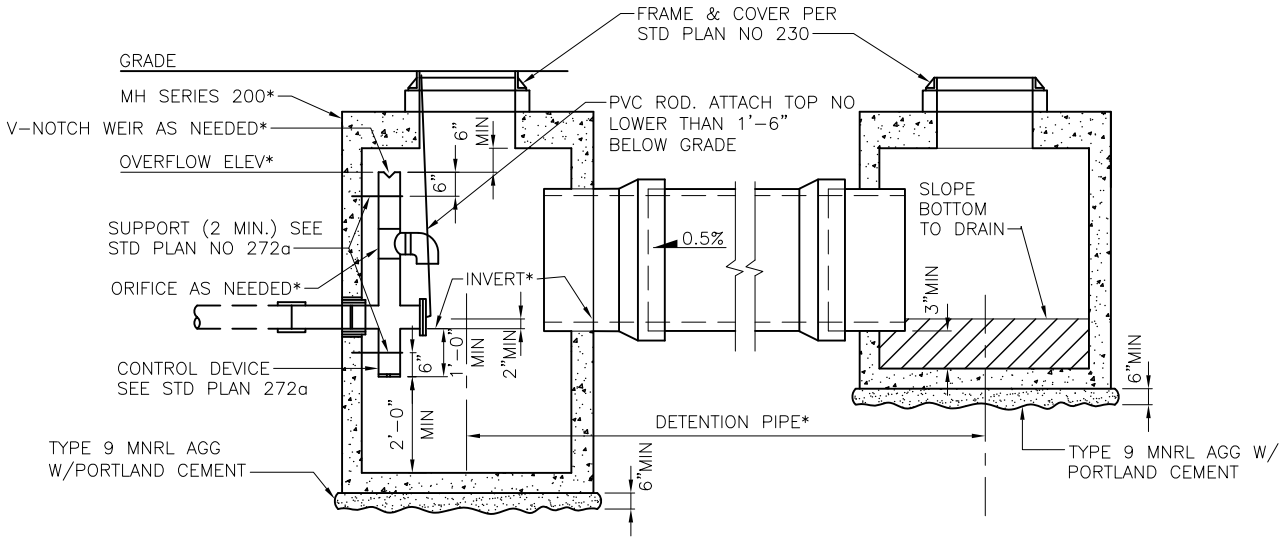

ELEVATION

NOTES:

1. DETENTION PIPE MATERIAL SHALL BE AS SHOWN ON THE APPROVED CONSTRUCTION DRAWINGS. MATERIALS THAT MAY BE APPROVED FOR USE IN THE ROW INCLUDE:
   - DUCTILE IRON PIPE (DIP)
   - REINFORCED CONCRETE PIPE (RCP)
   - POLYPROPYLENE PIPE (PP DETENTION)
   - STEEL REINFORCED POLYETHYLENE PIPE (STL REINF PE DETENTION). ONLY MANUFACTURER SUPPLIED TEES SHALL BE USED FOR CONNECTIONS.
2. BEDDING FOR DETENTION PIPE SHALL BE CLASS B. DIP AND RCP SHALL BE BEDDED IN MINERAL AGGREGATE TYPE 9. FLEXIBLE PIPE SHALL BE BEDDED IN MINERAL AGGREGATE TYPE 22.
3. INTERMEDIATE MHS WILL BE REQUIRED FOR DETENTION PIPE LENGTHS GREATER THAN 350LF.
4. OUTLET PIPE SHALL CONNECT TO MH ON MAINLINE.
5. STRUCTURE DESIGN SHALL BE MODIFIED FOR PRIVATE SYSTEM WITH EXCLUSION OF SHEAR GATE
6. ROTATE ELBOW RESTRICTOR CLEAR OF ACCESS OPENING.
7. FRAME LADDER AND STEPS OFFSET:
   - 7.1. CLEAN OUT IS VISIBLE FROM TOP
   - 7.2. CLIMB DOWN SPACE IS CLEAR OF RISER AND CLEAN OUT GATE
   - 7.3. MH OPENING SHALL NOT BE PLACED DIRECTLY OVER THE TOP OF INLET PIPE

DETENTION PIPE DIAMETER	FLOW CONTROL STRUCTURE* (MH SIZE)	UPSTREAM** (MH SIZE)
18"	204.5b	204b
24"	205b	204.5b
30"	205b	205b
36"	206b	206b
48"	207b	207b
60"	208b	208b
72"	210b	210b

*SPECIFIC DESIGN INFORMATION AS INDICATED ON CONSTRUCTION DRAWINGS

**SIZE OF UPSTREAM MH SHALL BE ADJUSTED FOR ALTERNATIVE PIPE MATERIAL

REF STD SPEC SEC 7-16

City of Seattle	NOT TO SCALE	FLOW CONTROL STRUCTURE WITH DETENTION PIPE

REV DATE: AUG 2013

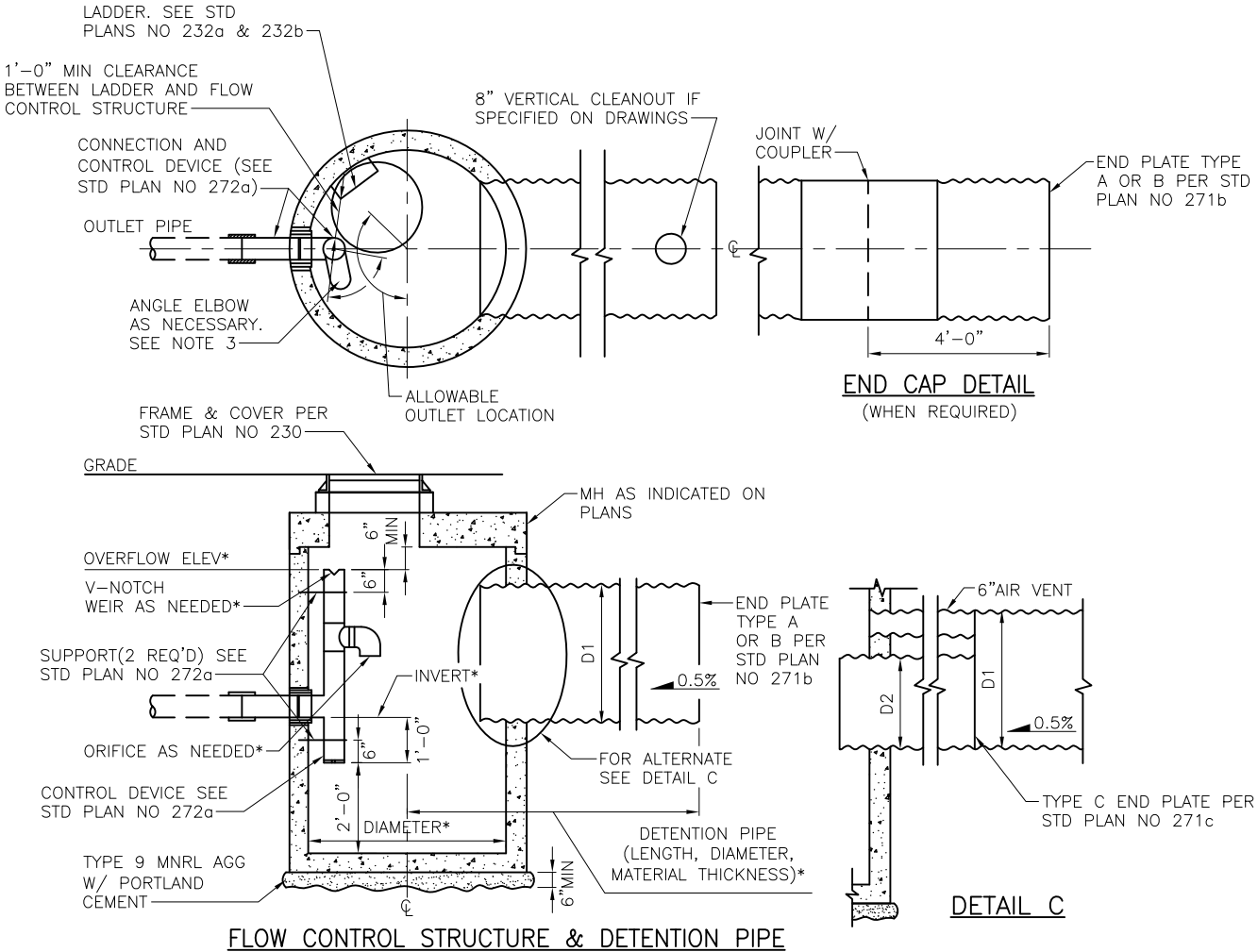

NOTES:

1. INVERT OF DETENTION PIPE TO BE HIGHER THAN INVERT OF OUTLET PIPE
2. *SPECIFIC DESIGN INFORMATION WILL BE INDICATED ON ACTUAL CONSTRUCTION DRAWINGS
3. ROTATE ELBOW RESTRICTOR CLEAR OF ACCESS OPENING
4. FOR ALTERNATIVE PIPE MATERIALS, REFER TO STD PLAN NO 270
5. FRAME LADDER AND STEPS OFFSET:
   - 5.1. CLEAN OUT IS VISIBLE FROM TOP
   - 5.2. CLIMB DOWN SPACE IS CLEAR OF RISER AND CLEAN OUT GATE
   - 5.3. MH OPENING SHALL NOT BE PLACED DIRECTLY OVER THE TOP OF INLET PIPE

REF STD SPEC SEC 7-16

City of Seattle	NOT TO SCALE	CMP DETENTION PIPE PRIVATE SYSTEM ONLY

REV DATE: AUG 2013

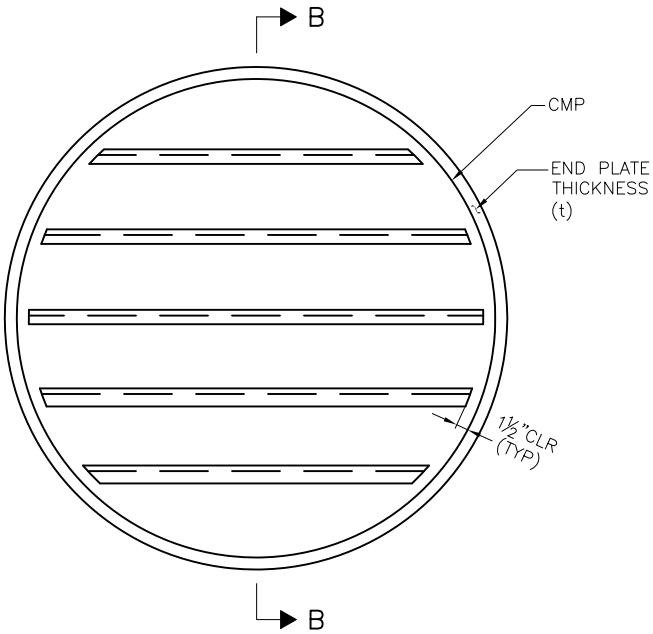

SECTION A–A

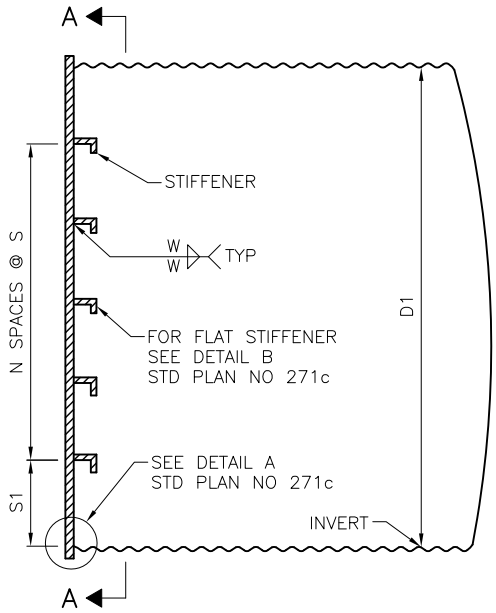

SECTION B–B

TYPE A

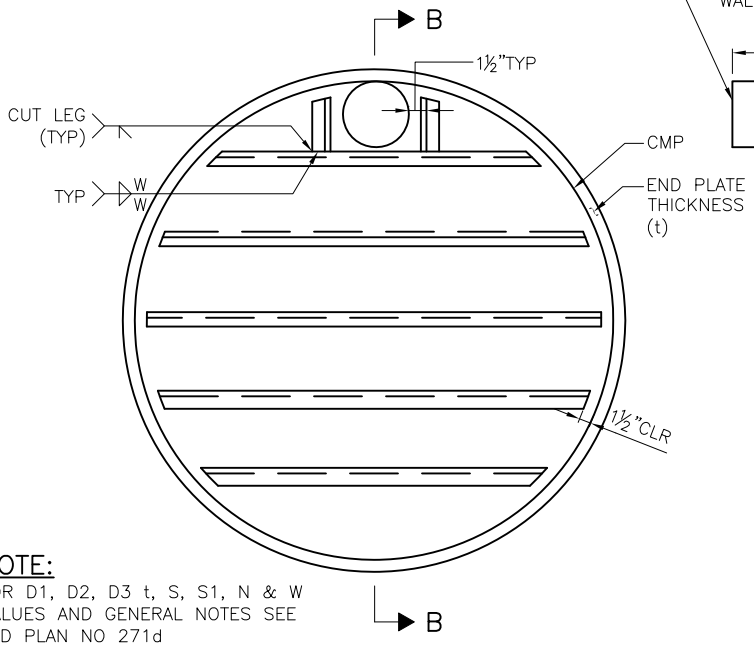

NOTE:
FOR D1, D2, D3 t, S, S1, N & W VALUES AND GENERAL NOTES SEE STD PLAN NO 271d

SECTION A–A

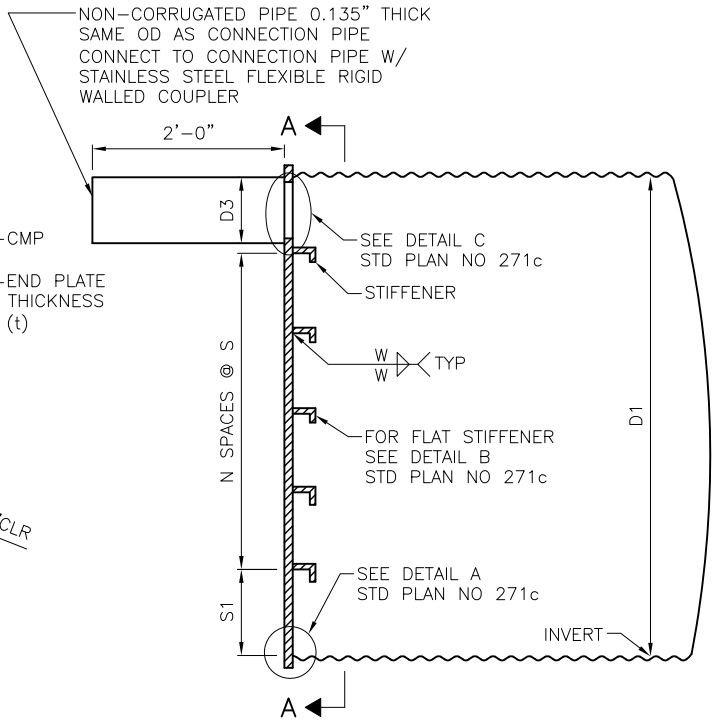

SECTION B–B

TYPE B

REF STD SPEC SEC 7-16

City of Seattle	NOT TO SCALE	CMP DETENTION STRUCTURE END PLATE DETAILS TYPES A & B

REV DATE: AUG 2013

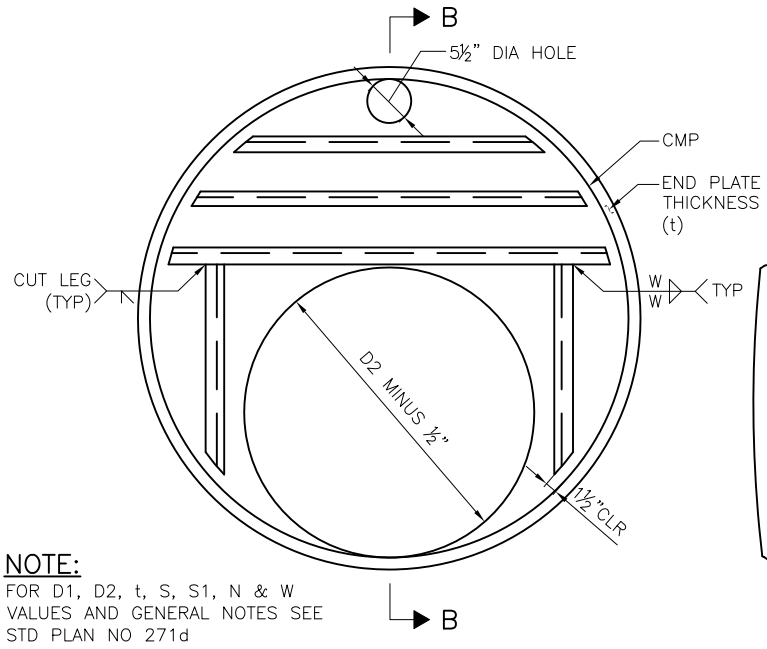

SECTION A–A

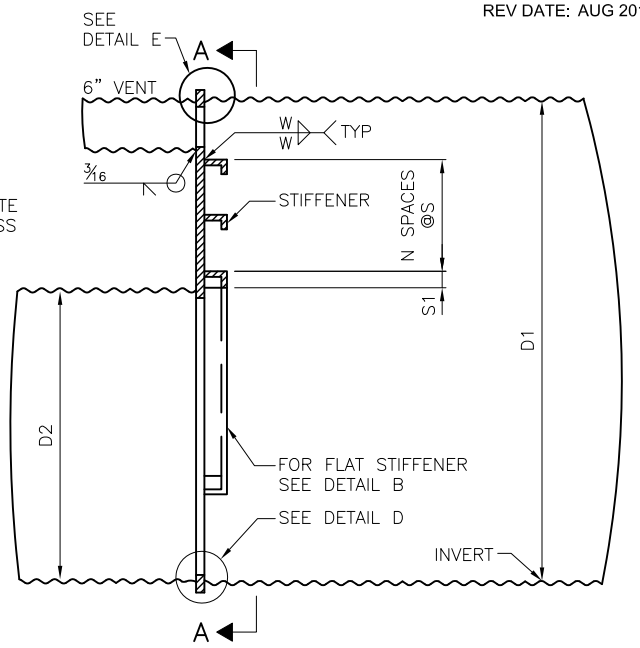

SECTION B–B

NOTE:
FOR D1, D2, t, S, S1, N & W VALUES AND GENERAL NOTES SEE STD PLAN NO 271d

TYPE C

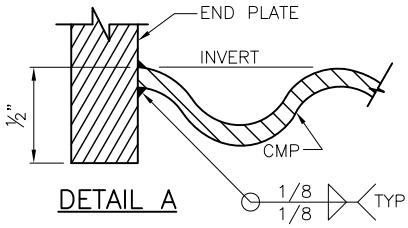

DETAIL A

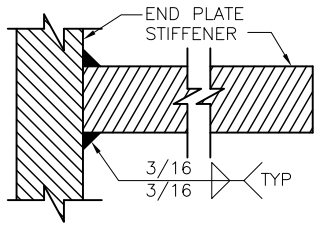

DETAIL B
FLAT STIFFENER

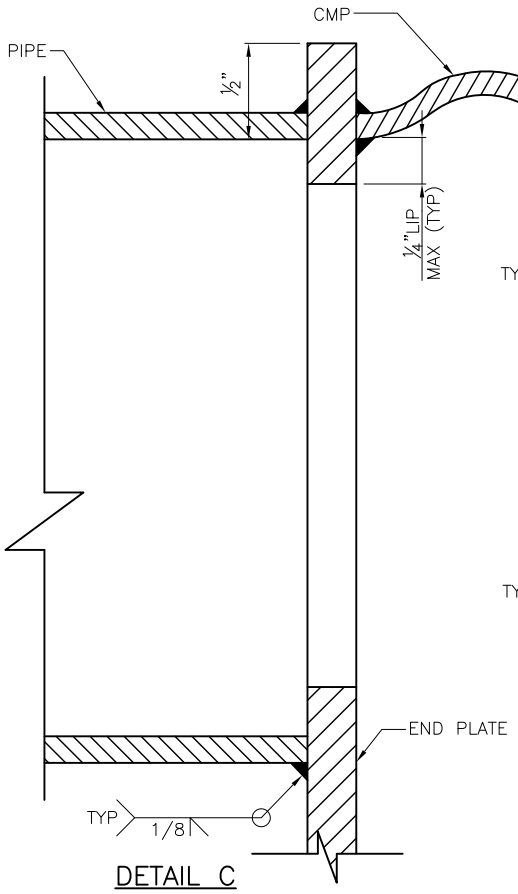

DETAIL C

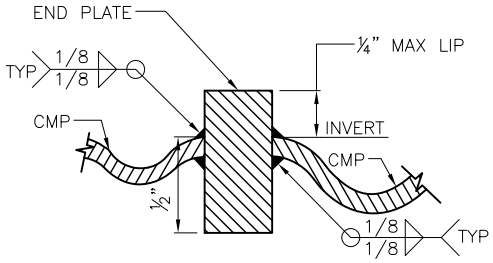

DETAIL D

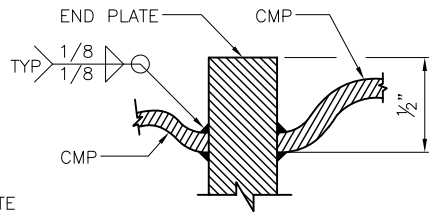

DETAIL E

REF STD SPEC SEC 7-16

City of Seattle	NOT TO SCALE	CMP DETENTION STRUCTURE END PLATE DETAILS TYPE C

REV DATE: JUL 2013

PIPE DIAMETER			END PLATE THICKNESS	STIFFENER TYPE & SIZE	STIFFENER SPACING			SIZE W
D1	D2	D3	t		S1	S	N	
TYPE A								
30"	–	–	¼"	FLAT 2½" X ¼"	6"	6"	3	3/16"
36"	–	–	¼"	FLAT 3" X ¼"	6"	6"	4	3/16"
48"	–	–	¼"	FLAT 4¼" X ¼"	8"	8"	4	3/16"
60"	–	–	⅜"	L 2½" X 2" X ⅜"	10"	10"	4	¼"
72"	–	–	⅜"	L 3" X 3" X ⅜"	6"	10"	6	¼"
TYPE B								
30"	–	6"	¼"	FLAT 2½" X ¼"	5½"	5½"	3	3/16"
	–	8"			5"	5"	3	
	–	12"			4"	6"	2	
36"	–	6"	¼"	FLAT 3" X ¼"	6"	5½"	4	3/16"
	–	8"			6"	5"	4	
	–	12"			5½"	5½"	3	
48"	–	6"	¼"	FLAT 4¼" X ¼"	8"	8"	4	3/16"
	–	8"			6"	8"	4	
	–	12"			4"	7½"	4	
60"	–	6"	⅜"	L 2½" X 2" X ⅜"	7"	9"	5	¼"
	–	8"			10"	10"	4	
	–	12"			6"	10"	4	
72"	–	6"	⅜"	L 3" X 3" X ⅜"	8"	8"	7	¼"
	–	8"			8"	9"	6	
	–	12"			8"	10"	5	
TYPE C								
48"	30"	–	¼"	FLAT 4¼" X ¼"	2"	8"	1	3/16"
60"	36"	–	⅜"	L 2½" X 2" X ⅜"	2"	7"	2	½"
72"	36"	–	⅜"	L 2" X 3" X ⅜"	3"	8½"	3	¼"

NOTES:

1. DESIGNS VALID FOR PIPE INSTALLED WITH 6'–0" OR LESS OF COVER FROM CROWN OF PIPE TO GRADE. MAXIMUM WATER SURCHARGE 3'–0" ABOVE CROWN OF PIPE
2. END PLATE MATERIAL: ALUMINUM 6061–T6
3. DESIGNS SHALL BE USED ONLY FOR ALUMINUM CMP

REF STD SPEC SEC 7-16

City of Seattle

NOT TO SCALE

CMP DETENTION STRUCTURE END PLATE DIMENSIONS

REV DATE: SEP 2013

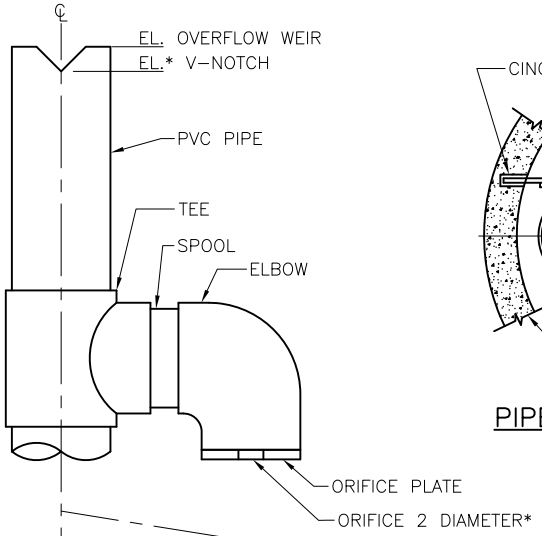

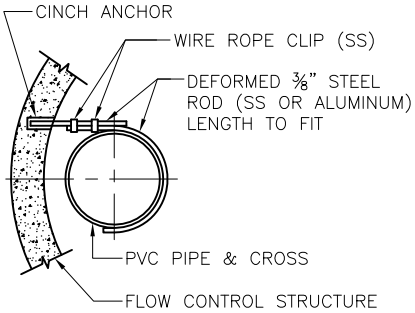

PIPE SUPPORT DETAIL

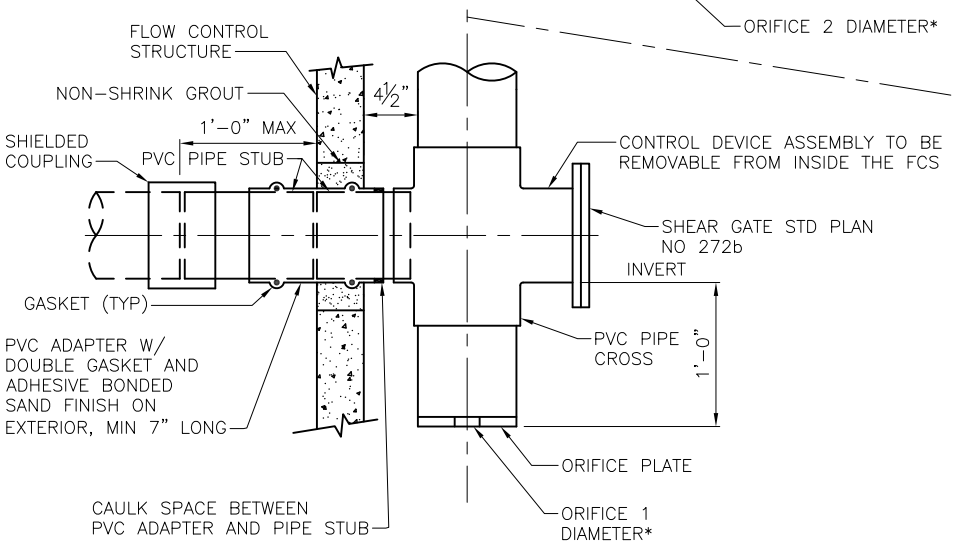

CONNECTION & CONTROL DEVICE FOR ROW USE

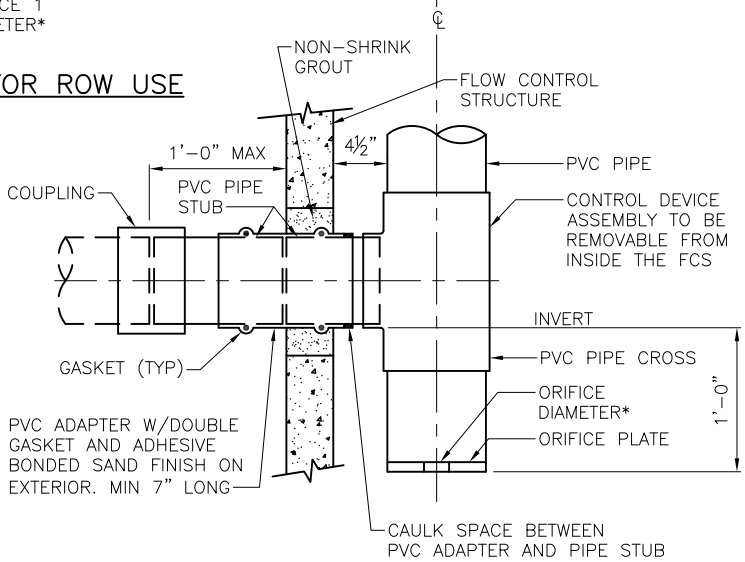

CONNECTION & CONTROL DEVICE FOR PRIVATE SYSTEM

NOTES:

1. PVC PIPE SHALL BE SCHEDULE 40, PER ASTM 1785.
2. *CONSTRUCTION DRAWINGS SHALL PROVIDE ELEVATION AND DIAMETER FOR ORIFICE 1 AND ORIFICE 2 AND DIMENSIONS AND ELEVATION FOR THE BOTTOM OF THE V–NOTCH WEIR AND ELEVATION FOR OVERFLOW.
3. FIELD CHANGES TO DETENTION PIPE INVERT AND SLOPE REQUIRE CONFIRMATION FROM THE ENGINEER OF RECORD THAT THE CONSTRUCTION DRAWING ELEVATIONS FOR THE FLOW CONTROL DEVICE ASSEMBLY STILL MEET THE DESIGN REQUIREMENTS.

REF STD SPEC SEC 7-16

City of Seattle	NOT TO SCALE	FLOW CONTROL DEVICE ASSEMBLY

REV DATE: SEPT 2013

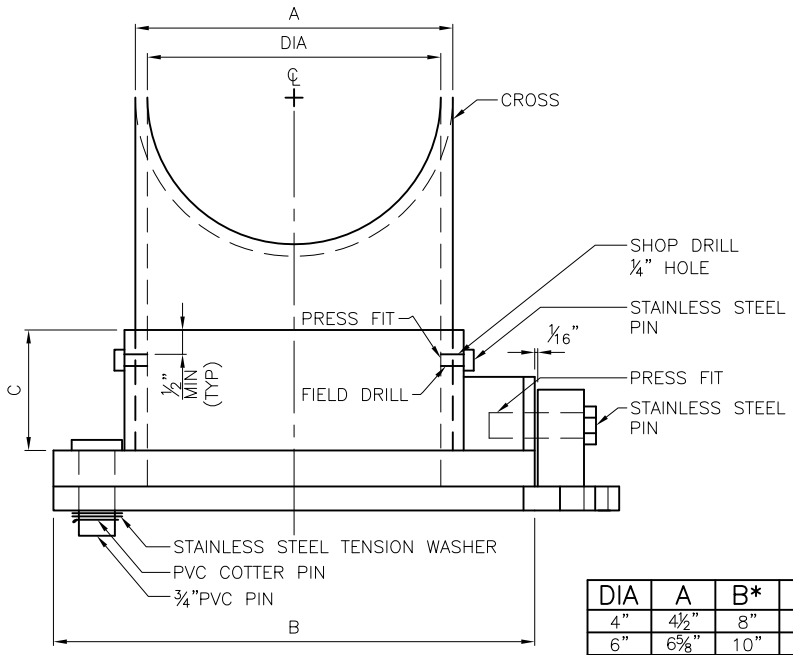

TOP VIEW

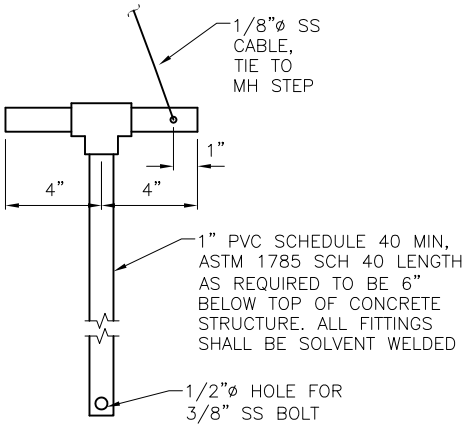

LIFT HANDLE

DIA	A	B*	C*
4"	4½"	8"	2"
6"	6⅝"	10"	2½"
8"	8⅝"	12"	3"
10"	10¾"	14"	3"
12"	12¾"	16"	3"

*MINIMUM

DIA= OUTLET PIPE DIAMETER

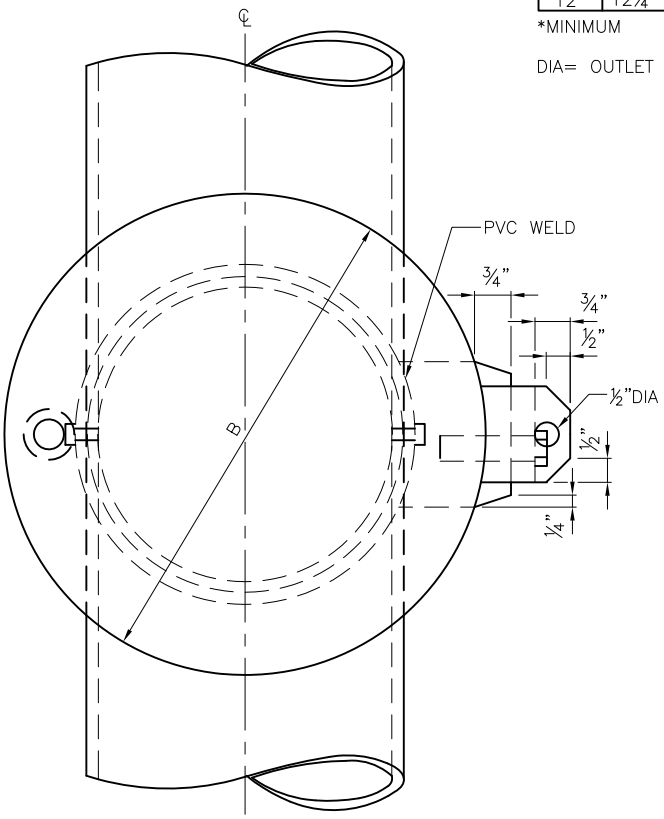

FRONT VIEW

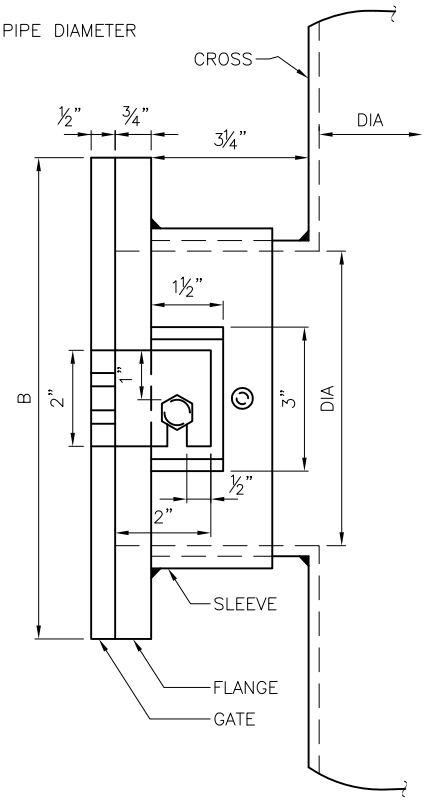

SIDE VIEW

REF STD SPEC SEC 7-16

City of Seattle	NOT TO SCALE	PVC SHEAR GATE FOR USE IN ROW ONLY

REV DATE: DEC 2013

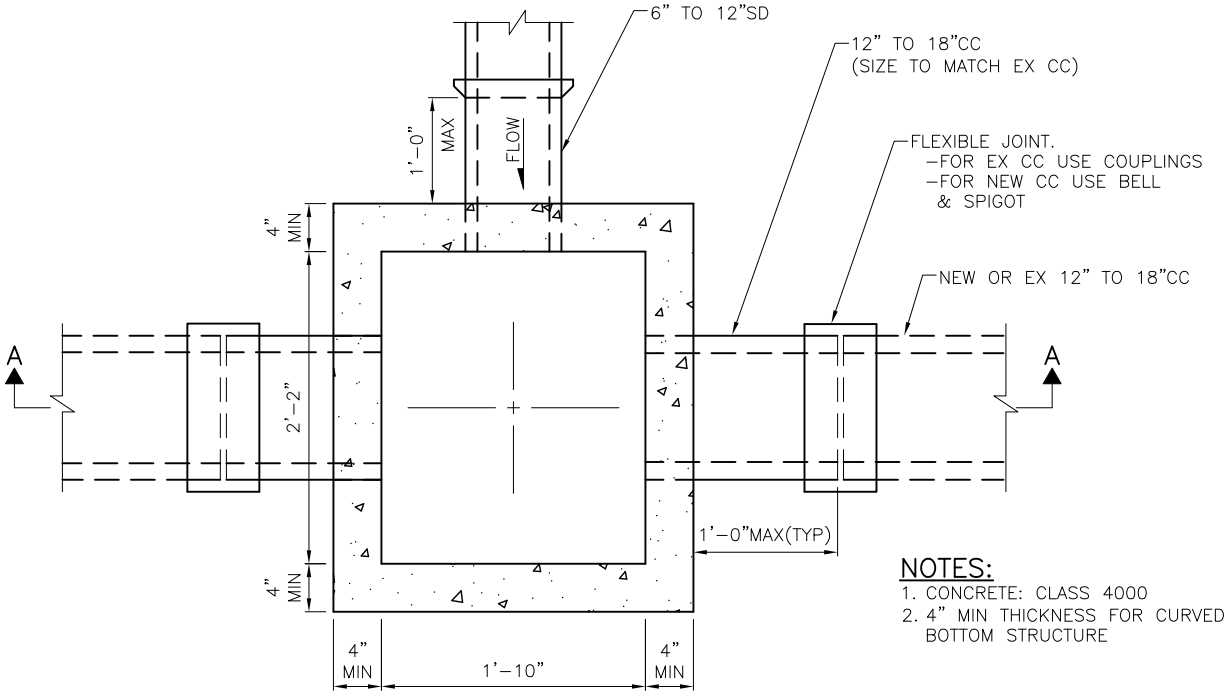

PLAN

NOTES:
1. CONCRETE: CLASS 4000
2. 4" MIN THICKNESS FOR CURVED BOTTOM STRUCTURE

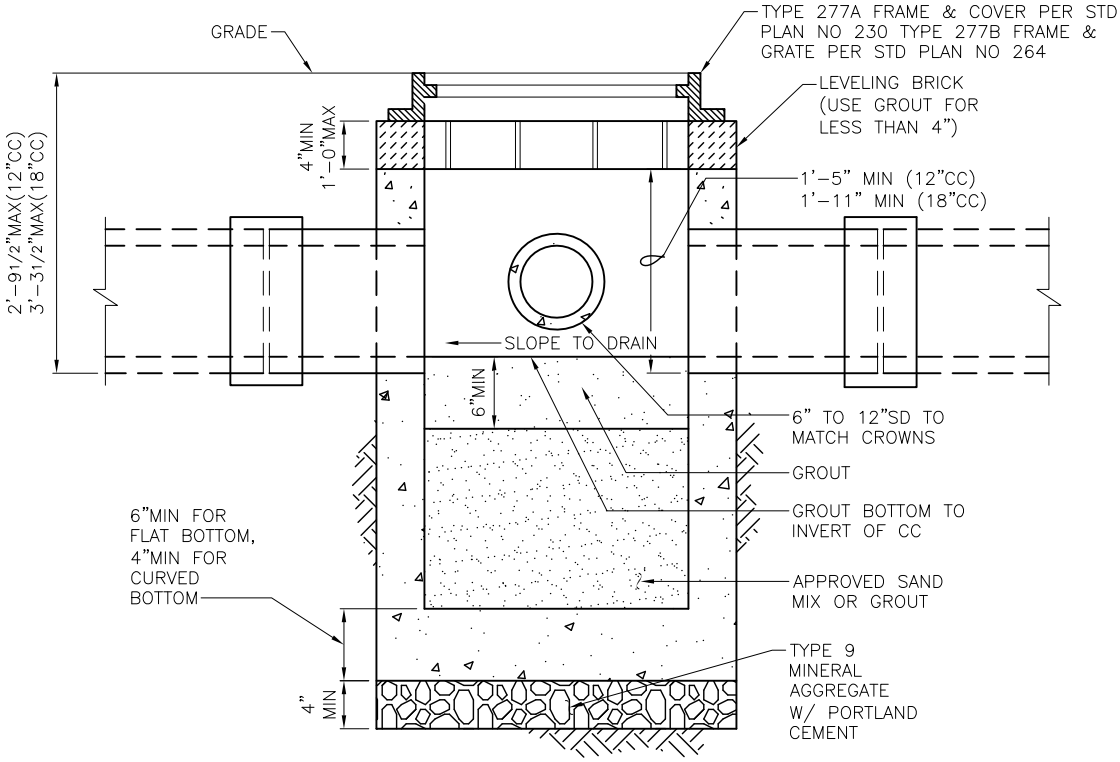

SECTION A–A

REF STD SPEC SEC 7-02 & 9-12.9

City of Seattle	NOT TO SCALE	TYPE 277 JUNCTION BOX & INSTALLATION

REV DATE: 2003

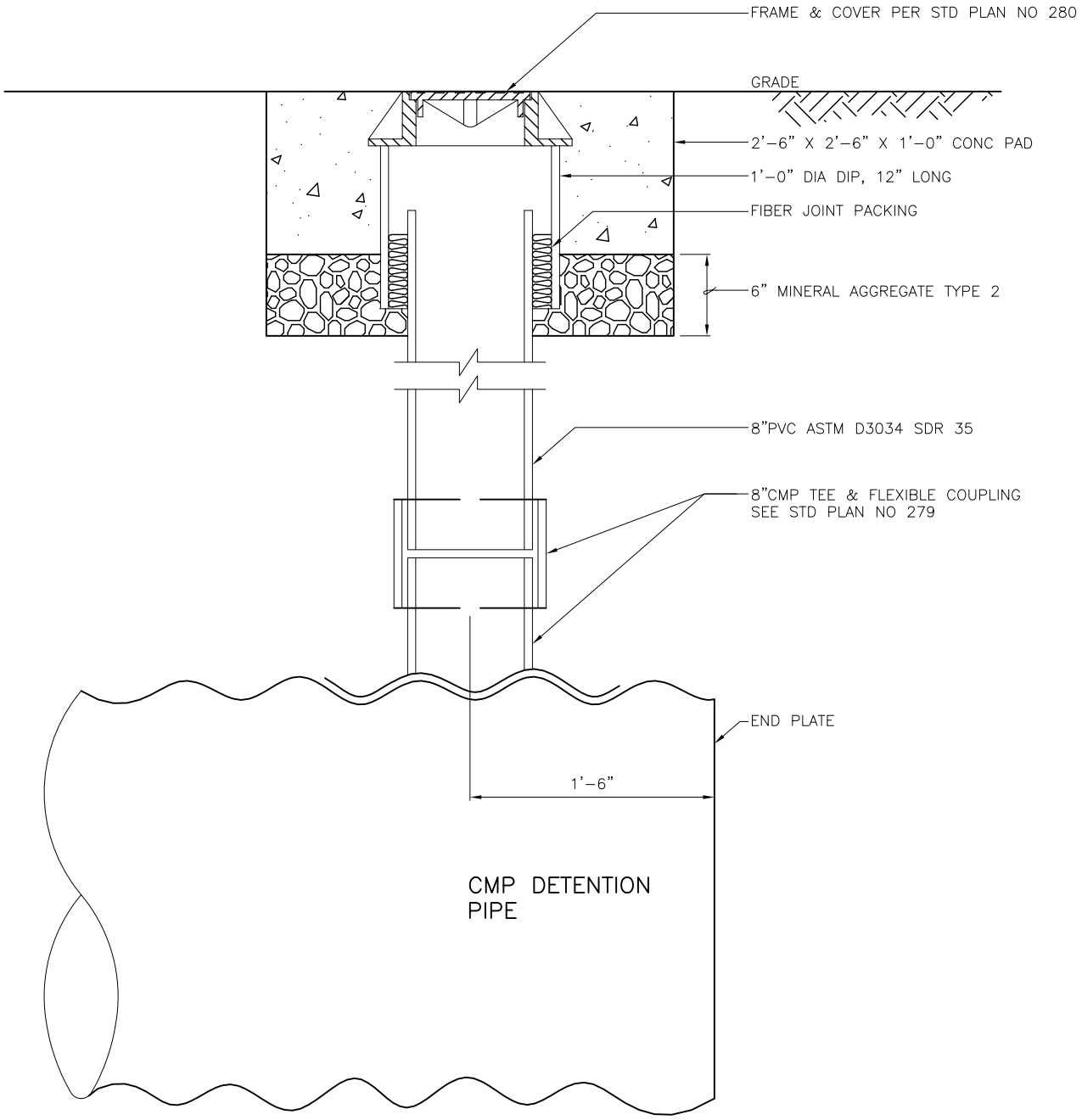

REF STD SPEC SEC 7-19 & 7-16.2

City of Seattle	NOT TO SCALE	VERTICAL CLEAN OUT/ CORRUGATED METAL PIPE

REV DATE: FEB 2010

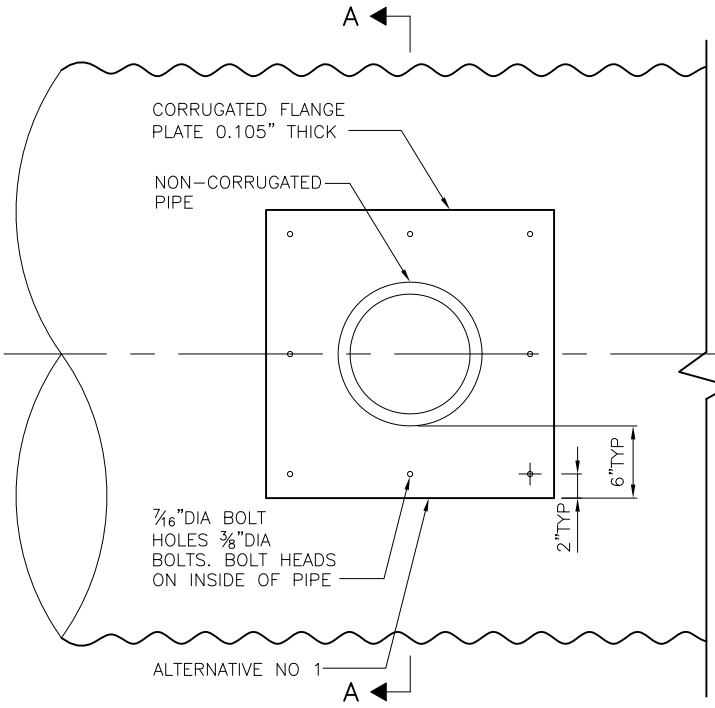

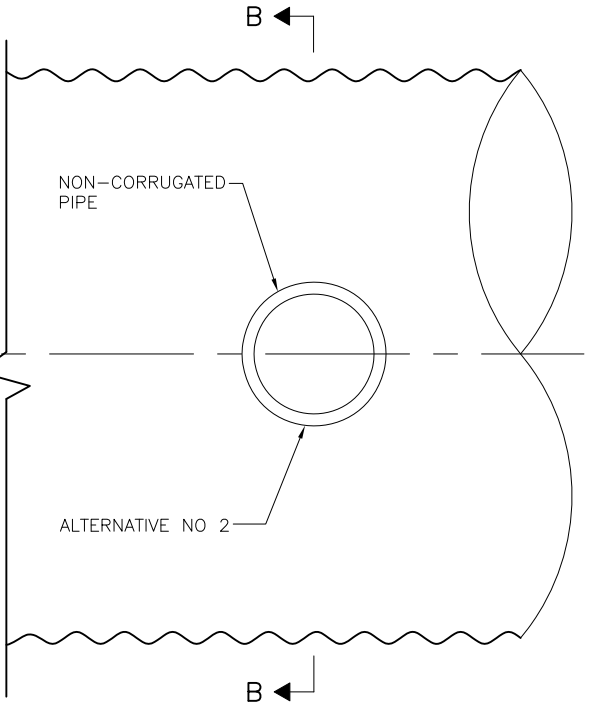

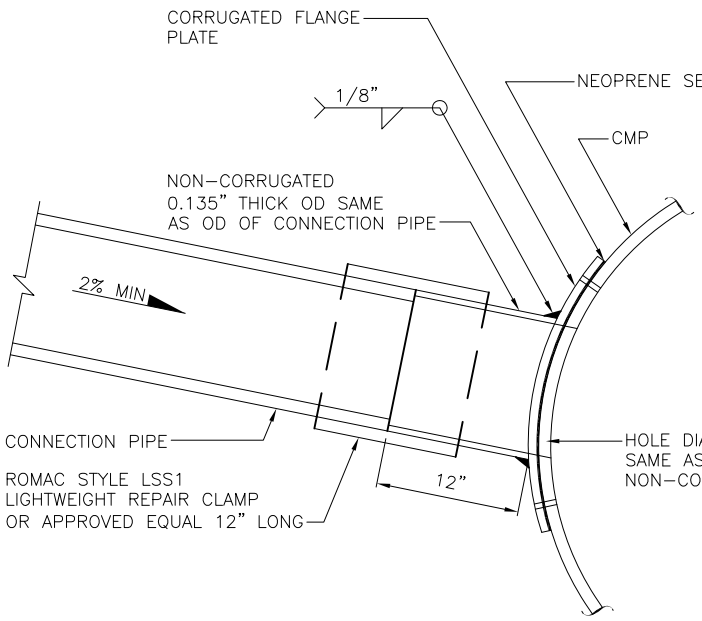

SECTION A–A

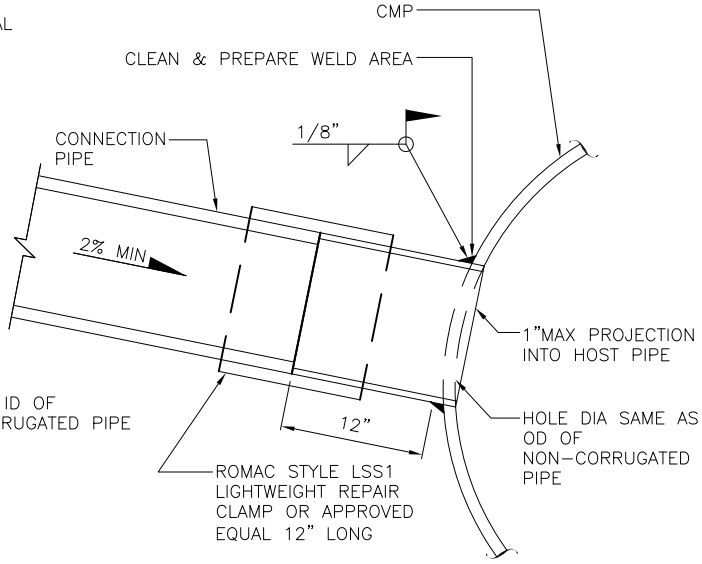

SECTION B–B

NOTES:

1. CORRUGATED FLANGE PLATE AND NON-CORRUGATED PIPE TO BE SAME MATERIAL AND HAVE SAME COATING AS CMP.
2. BOLTS TO BE STAINLESS STEEL MEETING ASTM A 307 OR STAINLESS STEEL MEETING ASTM A 193.

NOTE:

USE ALTERNATIVE NO 1 IF PIPE CONDITION PROHIBITS WELDING

REF STD SPEC SEC 7-17 & 7-16.2

City of Seattle	NOT TO SCALE	TEE INSTALLATION CORRUGATED METAL PIPE

REV DATE: 2003

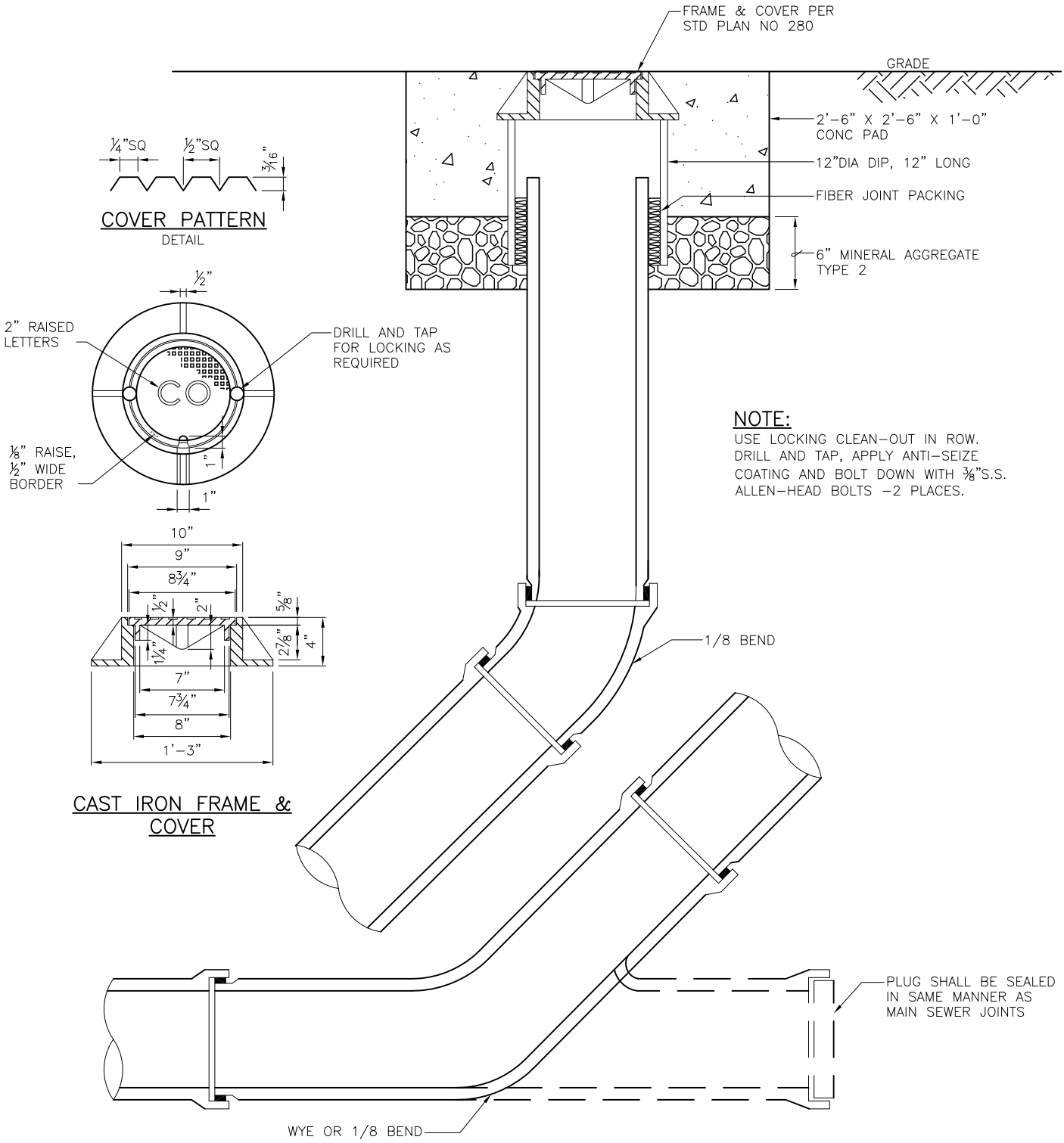

REF STD SPEC SEC 7-19

City of Seattle	NOT TO SCALE	8" CLEAN-OUT

REV DATE: AUG 2013

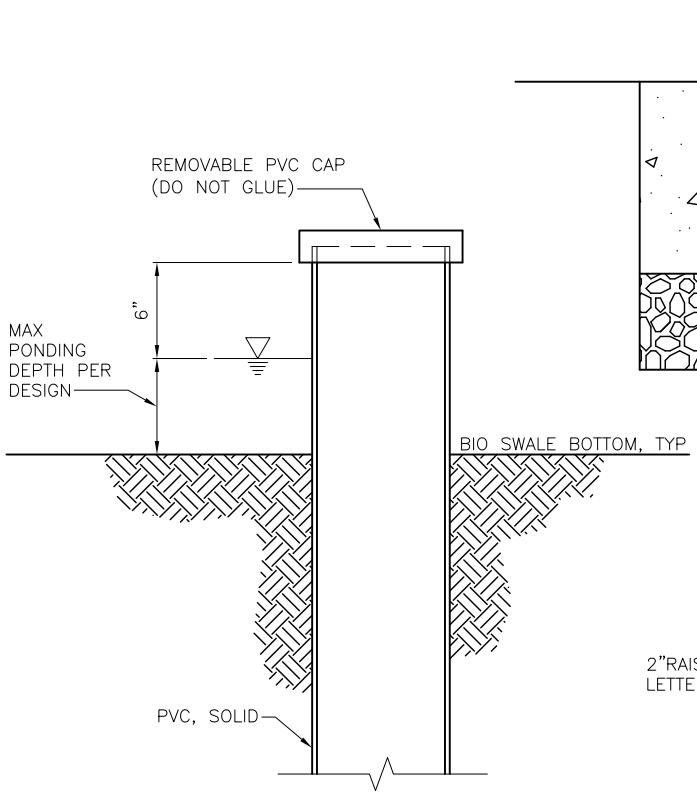

PVC TOP

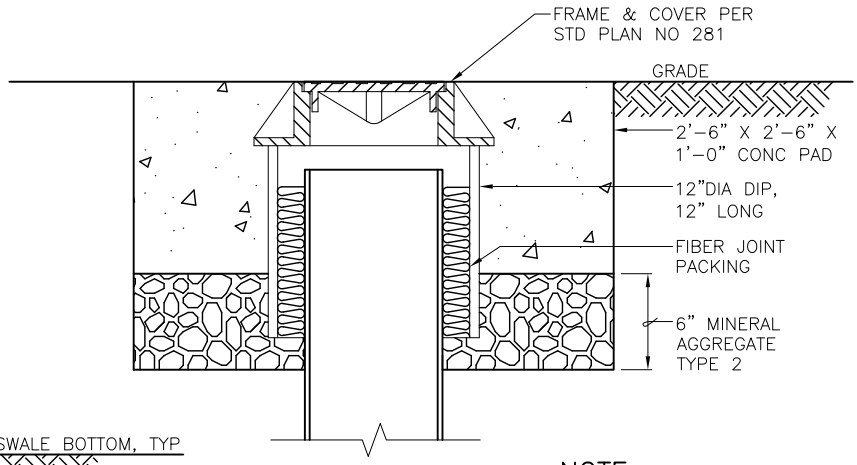

LOCKING CAST IRON TOP

NOTE:
USE LOCKING CLEAN-OUT IN CONCRETE WALK AREAS. DRILL AND TAP, APPLY ANTI-SEIZE COATING AND BOLT DOWN WITH ⅜"S.S. ALLEN-HEAD BOLTS -2 PLACES.

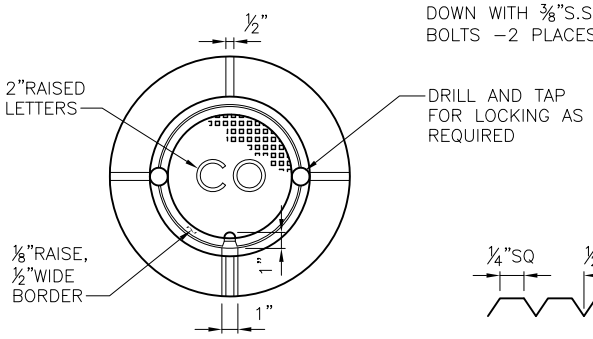

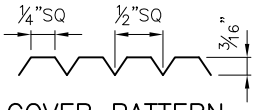

COVER PATTERN
DETAIL

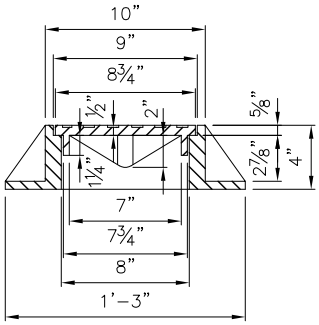

CAST IRON FRAME & COVER

NOTE:
MINIMUM DIAMETER = 6"

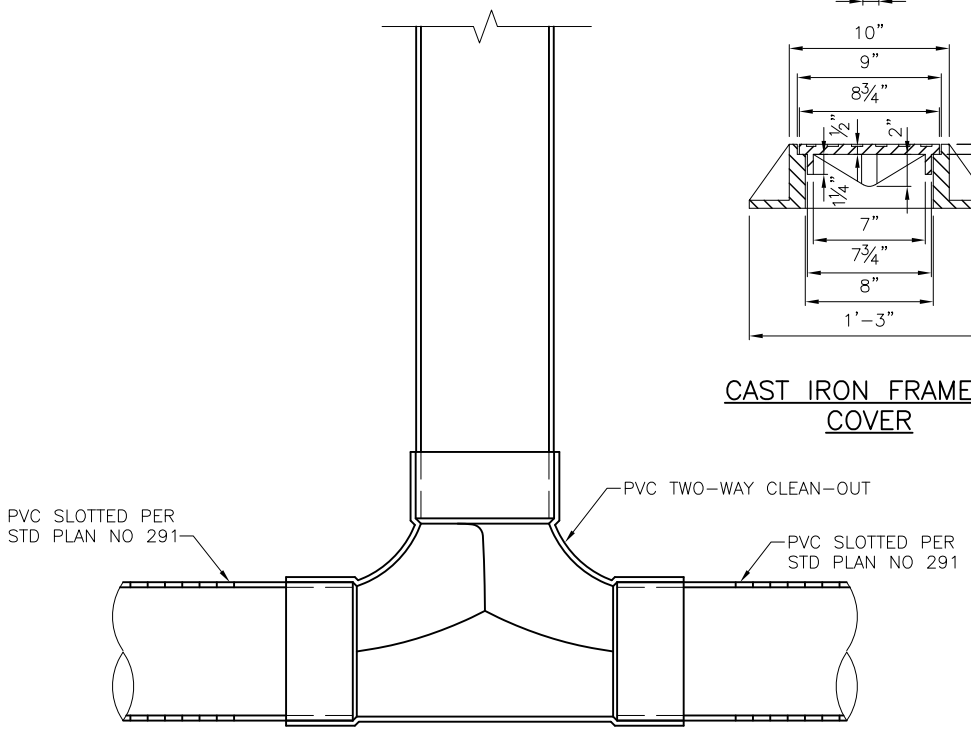

REF STD SPEC SEC 7-19

City of Seattle	NOT TO SCALE	BIORETENTION UNDER DRAIN CLEAN-OUT AND OBSERVATION PORT

REV DATE: 2003

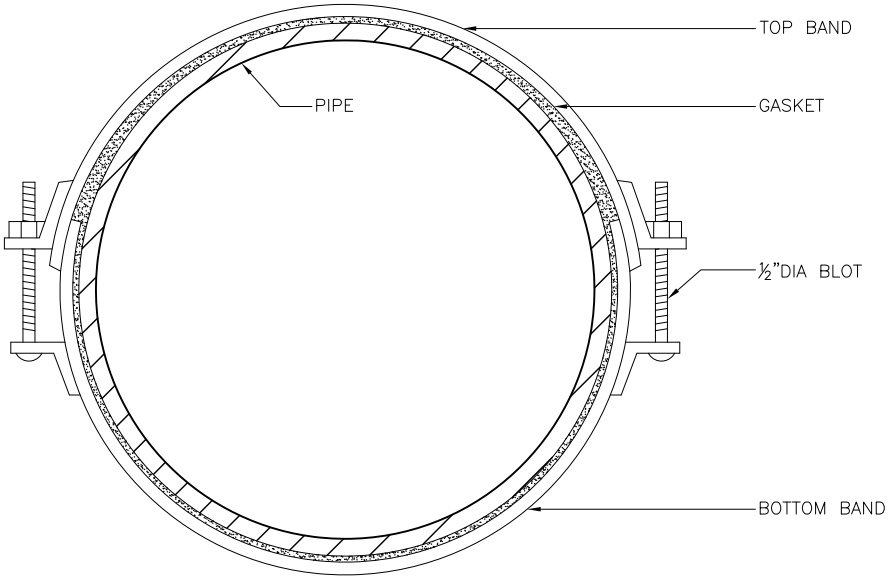

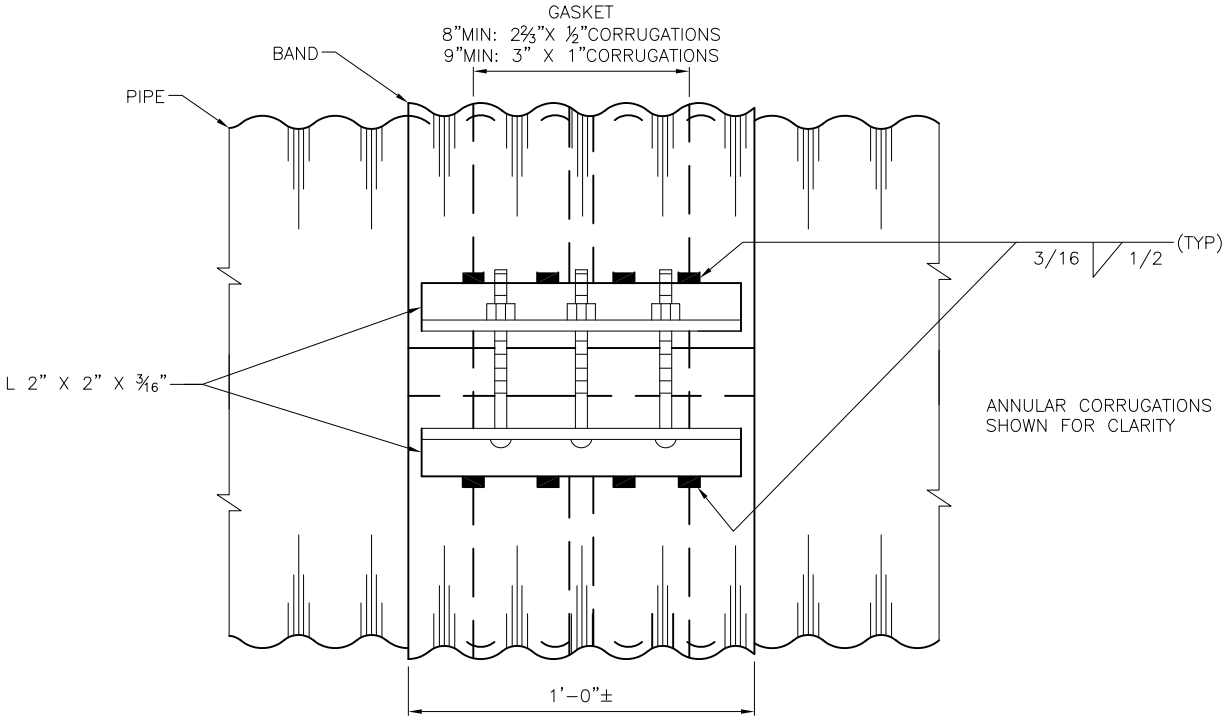

FOR PIPES LESS THAN 48" DIAMETER
(HELICAL OR ANNULAR)

REF STD SPEC SEC 7-16.2 & 9-05

City of Seattle	NOT TO SCALE	CORRUGATED METAL PIPE COUPLING BANDS

REV DATE: 2003

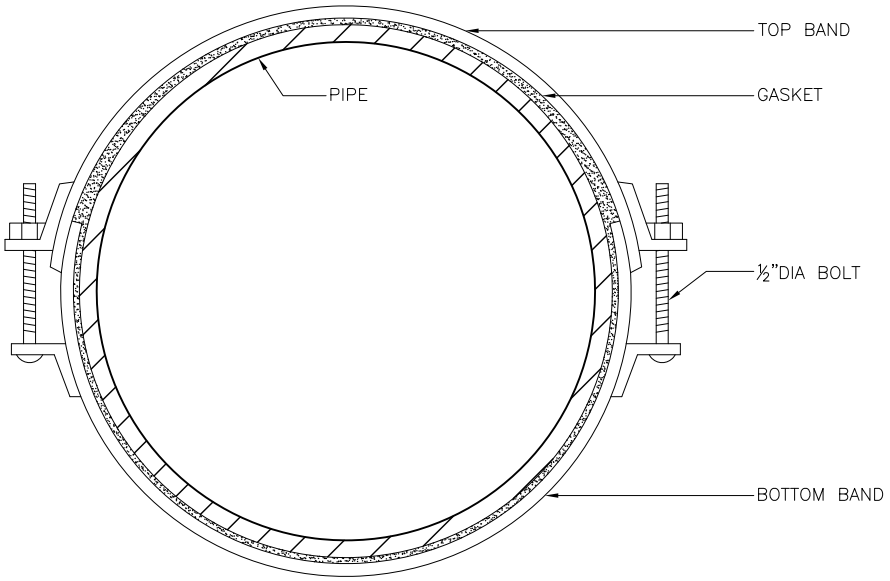

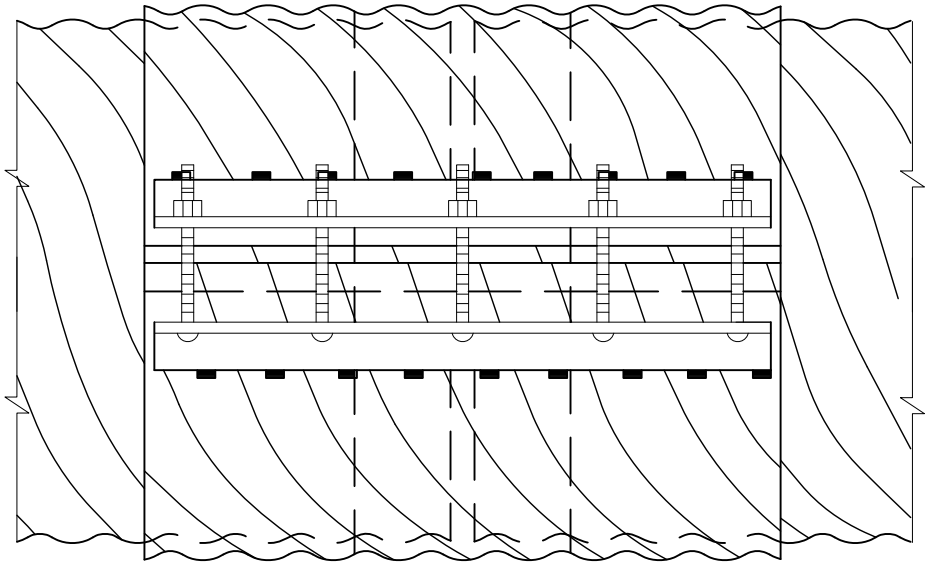

REF STD SPEC SEC 7-16.2 & 9-05

City of Seattle	NOT TO SCALE	CORRUGATED METAL PIPE COUPLING BANDS

REV DATE: AUG 2010

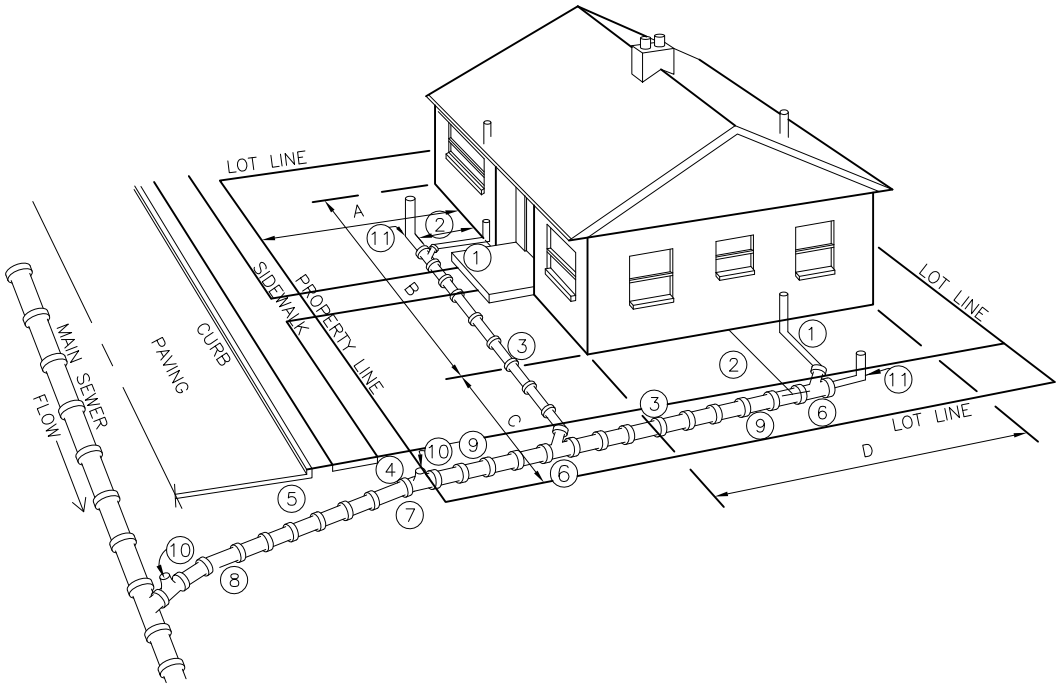

NOTES:

1. ALL SANITARY PLUMBING OUTLETS SHALL BE CONNECTED TO THE SANITARY SEWER OR COMBINED SEWER.
2. 2'–6"MIN DISTANCE FROM HOUSE, EXCEPT FOR SOIL PIPE CONNECTION.
3. 1'–6"MIN COVER OF PIPE.
4. 2'–6"MIN COVER AT PROPERTY LINE.
5. 5'–0"MIN COVER AT CURB LINE.
6. LAY PIPE IN STRAIGHT LINE BETWEEN BENDS. MAKE ALL CHANGES IN GRADE OR LINE WITH BENDS OR WYES.
7. STANDARD 4" TO 6" INCREASER.
8. 6" SEWER PIPE: MIN SIZE IN STREET, AND ELSEWHERE AS DIRECTED. 2% MIN GRADE, 100% MAX.
9. 4" SEWER PIPE: MIN SIZE ON PROPERTY. 2% MIN GRADE, 100% (45°) MAX.
10. TEST "T" WITH PLUG
11. CLEANOUT AT UPSTREAM END OF SIDE SEWER.

A. CONSTRUCTION IN STREET SHALL BE DONE BY A REGISTERED SIDE SEWER CONTRACTOR.
B. ALL CONSTRUCTION SHALL BE IN ACCORDANCE WITH THE CURRENT SIDE SEWER ORDINANCE.

REF STD SPEC SEC 7-18

City of Seattle	NOT TO SCALE	SIDE SEWER INSTALLATION

REV DATE: JAN 2013

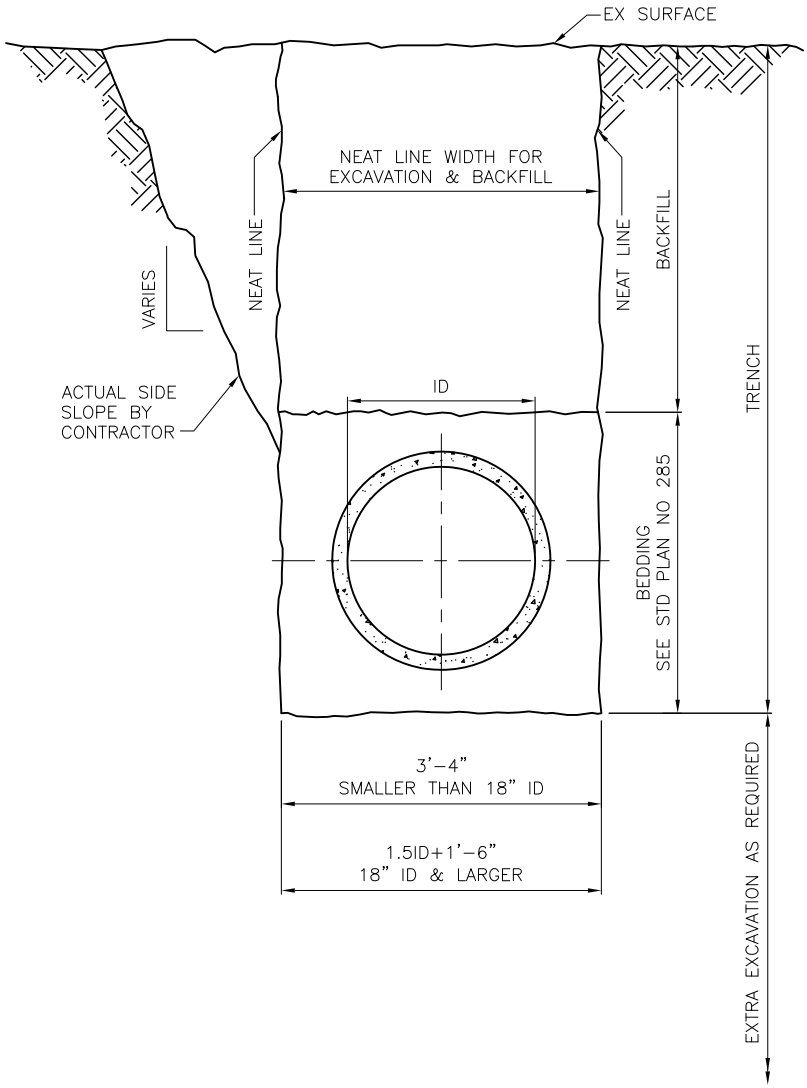

REF STD SPEC SEC 2-07 & 7-17

City of Seattle	NOT TO SCALE	TYPICAL TRENCH DETAIL FOR SEWER & STORM DRAIN

REV DATE: FEB 2014

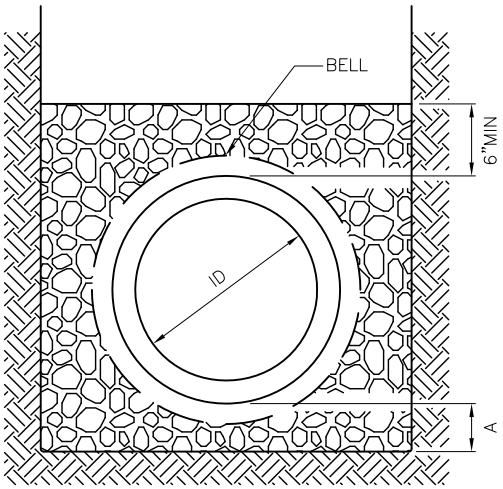

CLASS B BEDDING

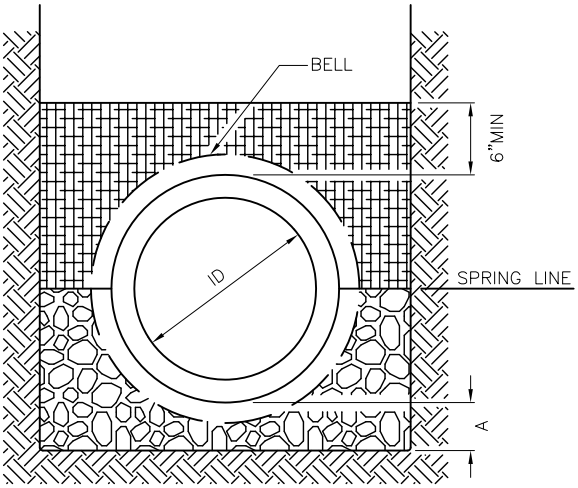

CLASS C BEDDING

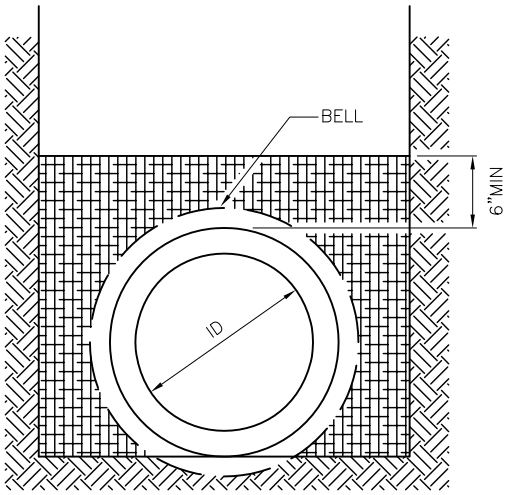

CLASS D BEDDING

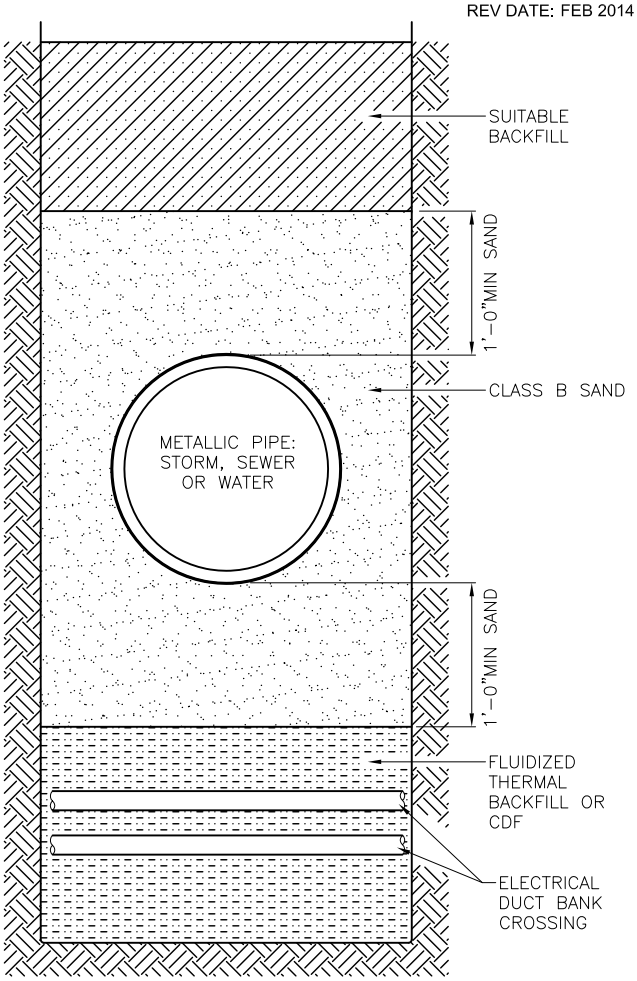

SAND BEDDING AT TRENCH CROSSING OF METAL PIPE

AT METALLIC PIPE CROSSING OF FLUIDIZED THERMAL BACKFILL OR CDF CONDUIT CROSSINGS

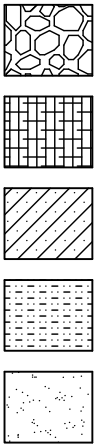

MINERAL AGGREGATE PER STD SPEC 9-03.16 TYPE 9 FOR DUCTILE IRON WHEN APPLICABLE OR CONCRETE PIPE TYPE 22 FOR VITRIFIED CLAY AND FLEXIBLE PIPE

SELECTED NATIVE MATERIAL

SUITABLE BACKFILL

FLUIDIZED THERMAL BACKFILL OR CDF

CLASS B SAND

NOTES:

1. FOR TRENCH WIDTH SEE STD PLAN NO 284
2. A=4"WHEN ID IS LESS THAN 2'-6", A=6"WHEN ID IS 2'-6"OR MORE.
3. UNIFORMLY SUPPORT PIPE BARREL. EXCAVATE HOLES FOR BELLS AND COUPLING.

REF STD SPEC SEC 7-11,7-17

City of Seattle	NOT TO SCALE	PIPE BEDDING SEWER/STORM DRAIN

REV DATE: AUG 2010

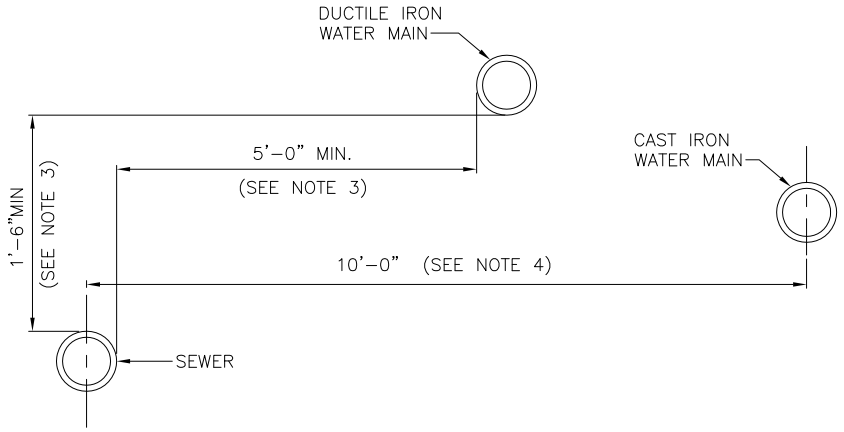

PARALLEL INSTALLATION

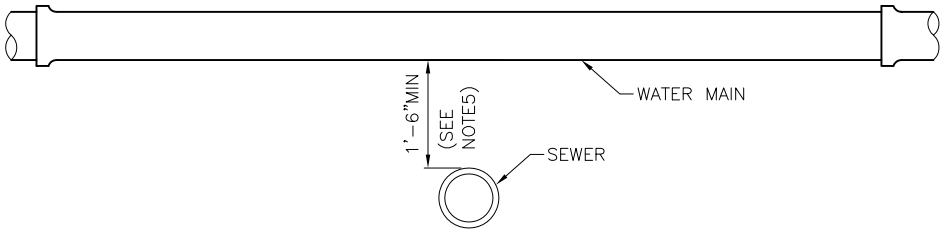

CROSSING WATER OVER SEWER

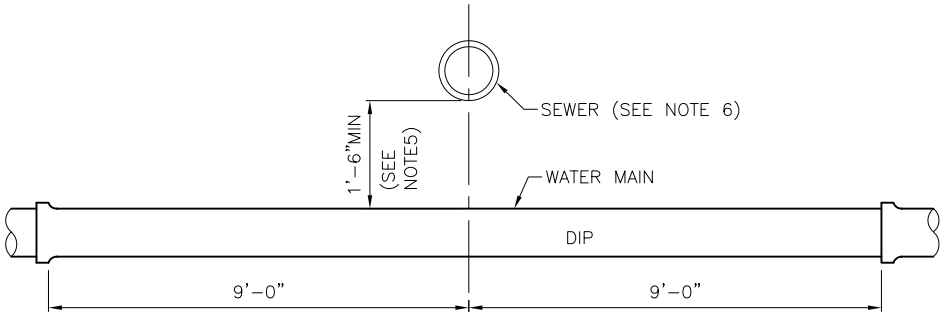

STANDARD SINGLE 18'–0" NOMINAL LENGTH DUCTILE IRON WATER MAIN SECTION CENTERED AT THE POINT OF CROSSING

CROSSING WATER UNDER SEWER

NOTES:

1. EXCEPTIONS TO STD PLAN NO 286 SHALL BE APPROVED BY SEATTLE PUBLIC UTILITIES, WATER QUALITY DIVISION.
2. "SEWER" INCLUDES SANITARY SEWER, COMBINED SEWER AND SIDE SEWER.
3. WHERE MINIMUM CLEARANCES CANNOT BE MET, SEWER SHALL BE CONSTRUCTED OF MATERIALS AND WITH JOINTS THAT ARE EQUIVALENT TO WATER MAIN STANDARDS INCLUDING WATER MAIN PRESSURE TESTING REQUIREMENTS.
4. NO VERTICAL CLEARANCE REQUIRED.
5. IF MINIMUM VERTICAL SEPARATION CANNOT BE MET, WATER MAIN SHALL BE A STANDARD SINGLE 18'–0" NOMINAL LENGTH DUCTILE IRON WATER MAIN SECTION CENTERED AT THE POINT OF CROSSING.
6. SEWER SHALL HAVE ADEQUATE FOUNDATION SUPPORT TO PREVENT SETTLEMENT ON THE WATER MAIN AND TO PREVENT DEFLECTION OF WATER MAIN JOINTS.
7. CROSSINGS AT AN ANGLE BETWEEN 90° AND 45° MAY OCCUR BETWEEN 9'–0" AND 6'–0" OF WATER MAIN JOINT. FOR CROSSINGS LESS THAN 45°, SEE NOTE 1.

REF STD SPEC SEC 1-07.17 & 7-11

City of Seattle	NOT TO SCALE	SEWER & WATER SPACING & CLEARANCES

REV DATE: AUG 2010

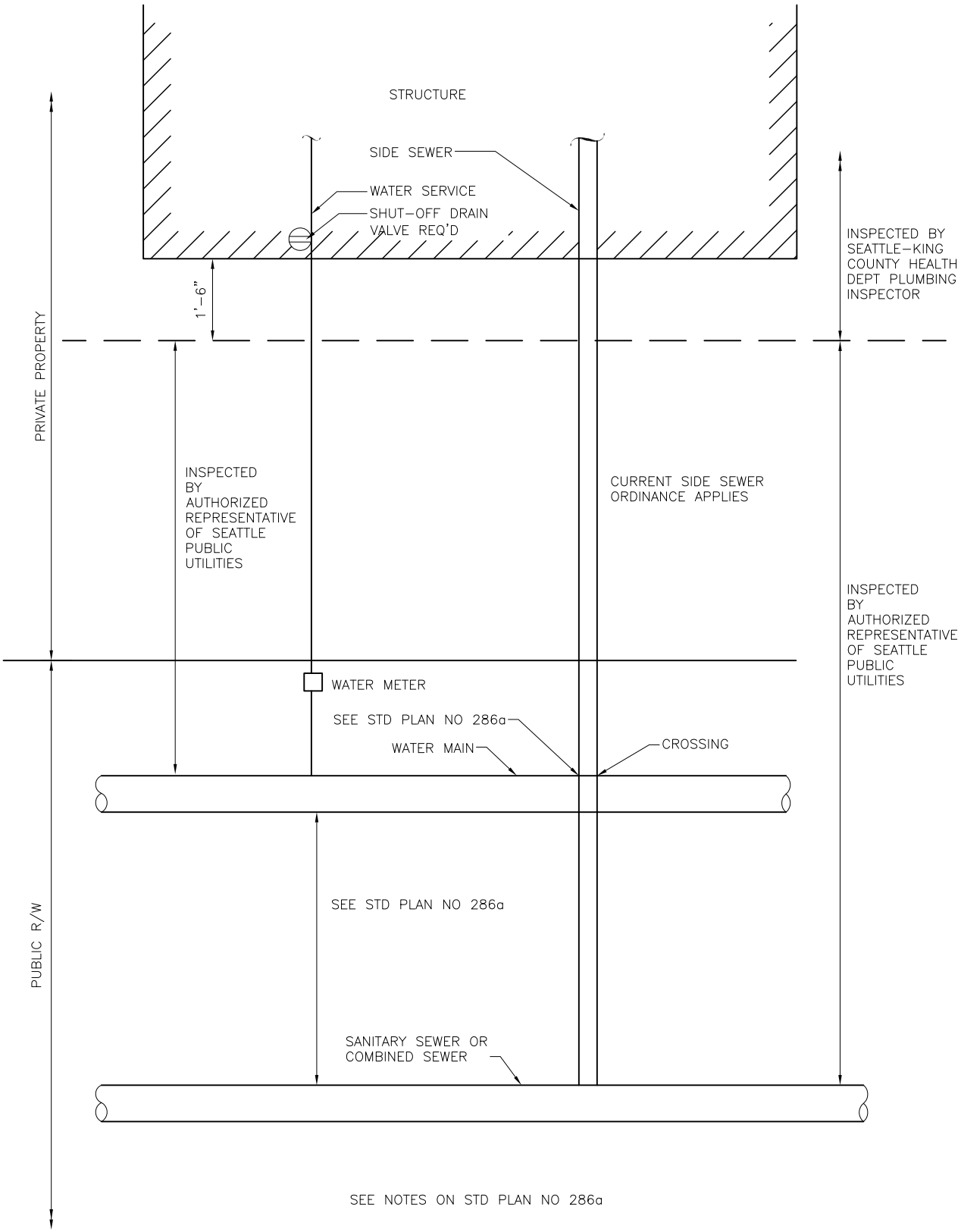

SEE NOTES ON STD PLAN NO 286a

REF STD SPEC SEC 1-07.17 & DIV 7

City of Seattle	NOT TO SCALE	SEWER & WATER SPACING & CLEARANCES

REV DATE: 2003

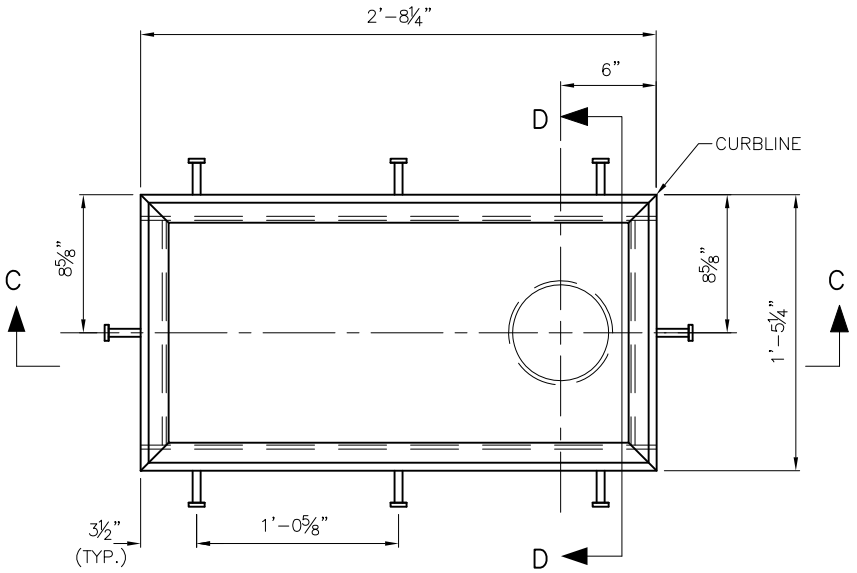

PLAN VIEW – BRIDGE DRAIN

SURFACE FLOW DIRECTION

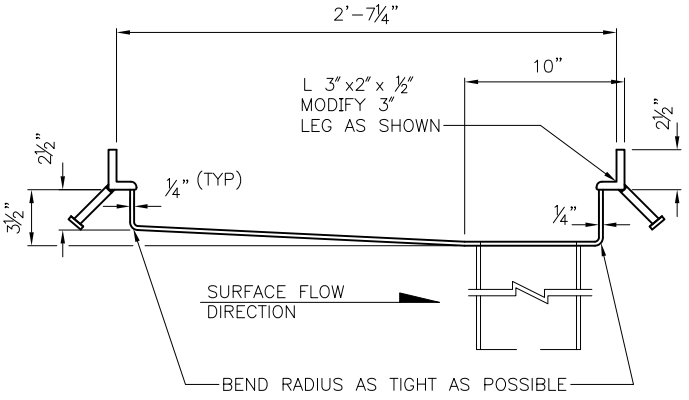

SECTION C–C

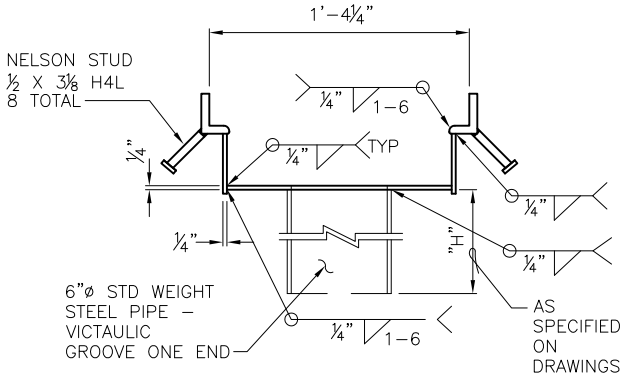

SECTION D–D

NOTES:

1. ALL ¼" STEEL & L3"x 2"x ½" TO BE A–36.
2. 6"ø PIPE TO BE STANDARD WEIGHT STEEL.
3. AFTER FABRICATION, DRAIN ASSEMBLY TO BE HOT DIP GALVANIZED.
4. VANED GRATE TO BE PER STD PLAN NO 265.

REF STD SPEC SEC 6-01 & 6-02

City of Seattle	NOT TO SCALE	BRIDGE DRAIN

REV DATE: DEC 2010

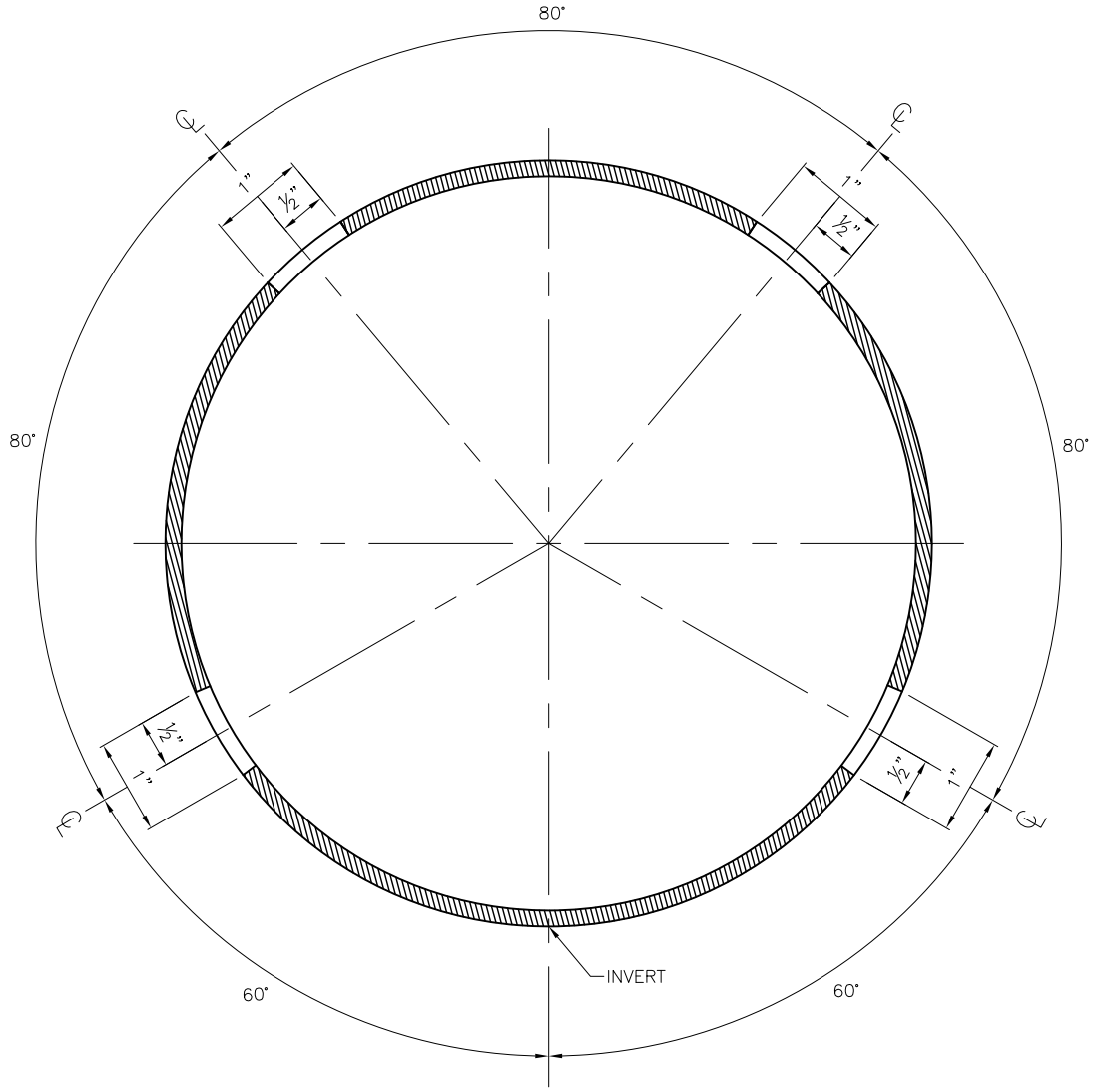

NOTES:

1. ASTM D 2241 SDR 21 CLASS 200 PVC PIPE OR ASTM D 1785 SCH 40.
2. SLOT DIMENSIONS ARE 0.064" WIDE X 1.00" LONG SPACED ALONG PIPE AT 0.3" ON CENTER.

REF STD SPEC SEC 9-05, 3(1)

City of Seattle	NOT TO SCALE	PVC SUBSURFACE DRAIN PIPE