Shared Land Marking Pavement Marking Template

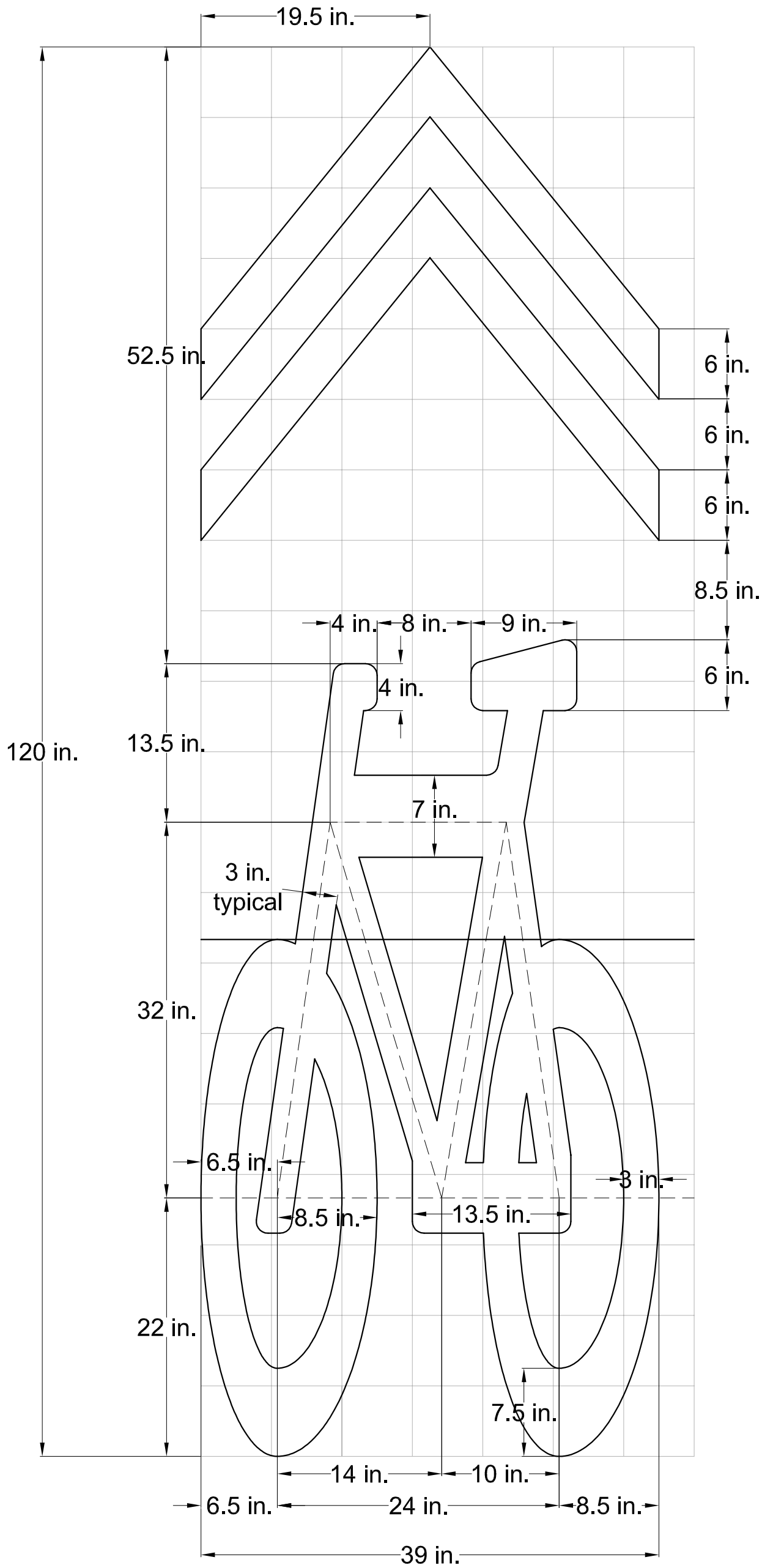

All rounded corners have a 1" radius.

The grid is 6"x6" squares.