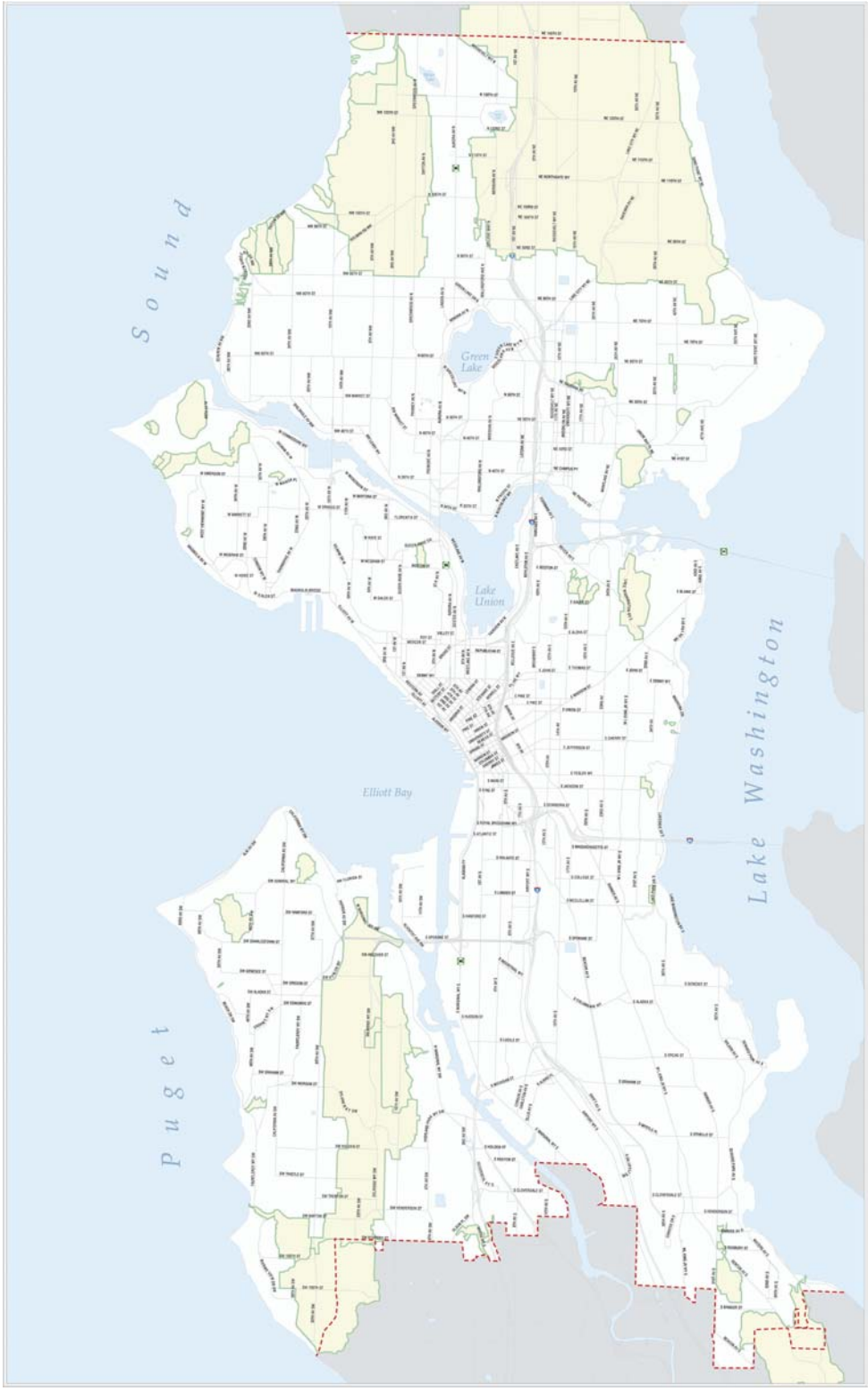

Figure 6-9 September 2005

City of Seattle Creek Basin

SEATTLE
RIGHT-OF-WAY
manual

LEGEND

Creek Basin Boundary

Seattle City Limits

N
W E
S

NOT TO SCALE

NOTE: GREEN STORMWATER INFRASTRUCTURE TECHNIQUES APPLIED AS A PART OF FULL OR PARTIAL STREET IMPROVEMENTS ARE GENERALLY REFERRED TO AS NATURAL DRAINAGE SYSTEMS (NDS).

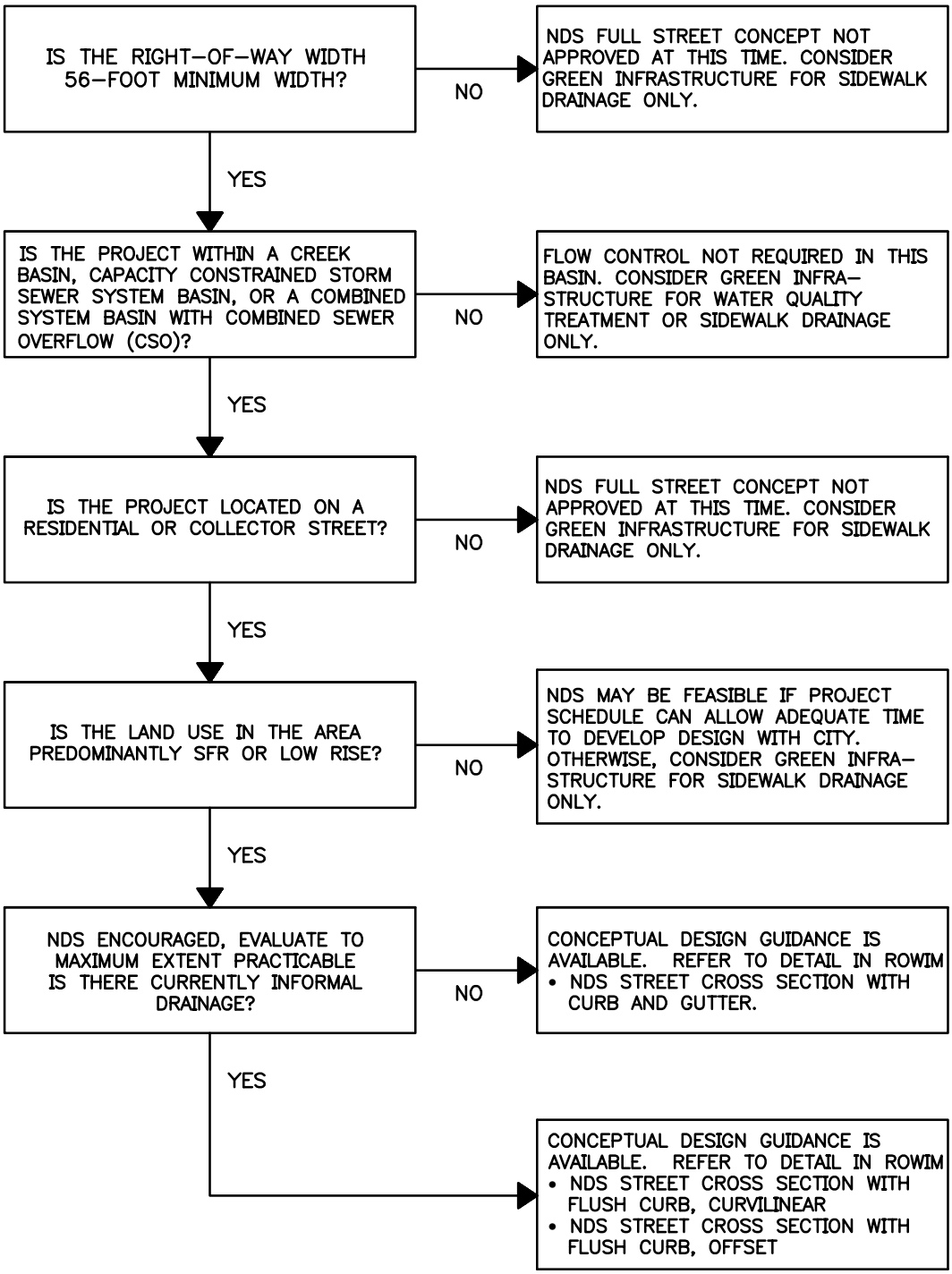

SEATTLE RIGHT-OF-WAY manual

NATURAL DRAINAGE SYSTEM DETAIL

EVALUATION OF NDS FULL STREET CONCEPT AS A PART OF FULL STREET IMPROVEMENTS

JULY 2008

FIGURE

6–10

P:\Utility\C333206_Std_Details\Plot Files\10 C333206_P10.dwg

NOTES: ROADWAY CURVATURE WOULD VARY ON A STREET–BY–STREET BASIS. SIDEWALKS WILL SEPARATE FROM THE ROADWAY AT INTERSECTIONS WITH TRAFFIC CIRCLES.

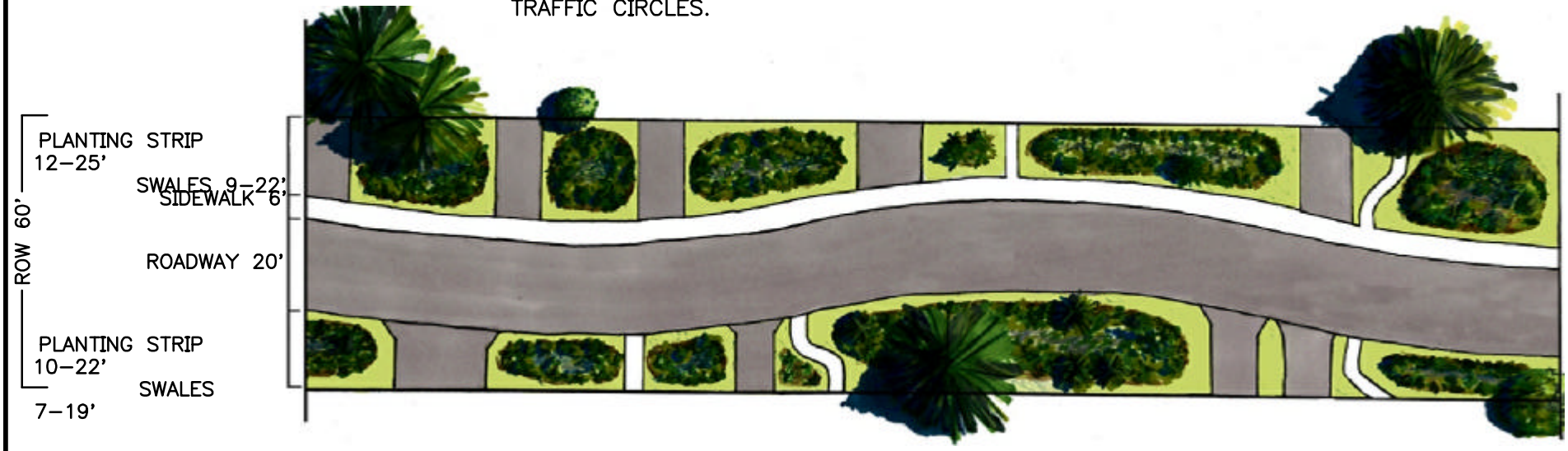

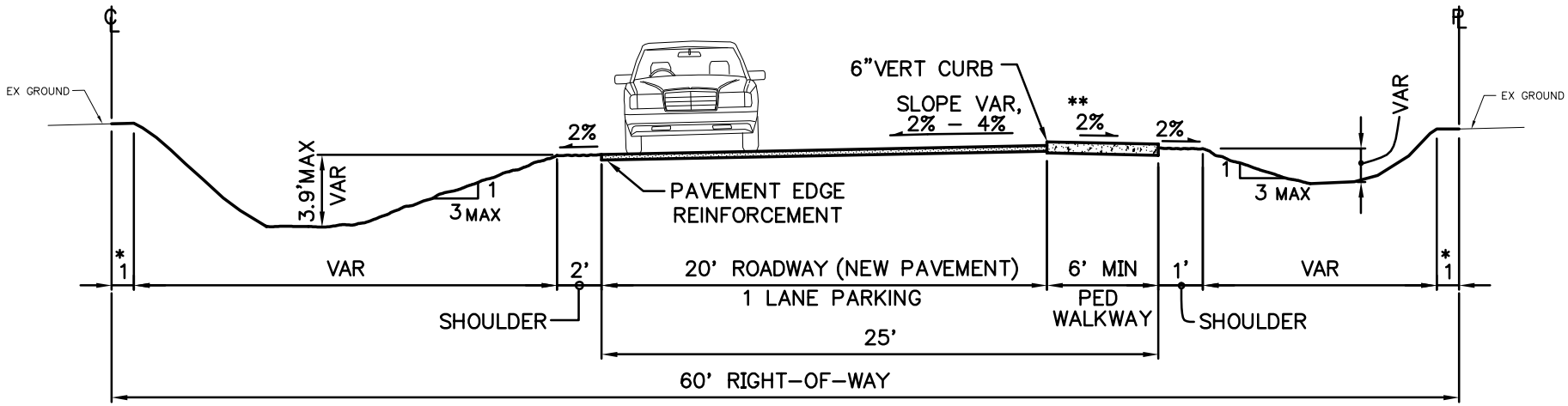

* Contingency space, not required
** Could slope to roadway

SEATTLE RIGHT-OF-WAY manual

NDS CONCEPTUAL DESIGN, CROSS-SECTION FOR FULL STREET IMPROVEMENT

CURVALINEAR, FLUSH CURB, PARKING ON ONE SIDE

JULY 2008

FIGIRE

6–11

P:\Utility\C333206_Std_Details\Plot Files\11 C333206_P11.dwg

NOTES: CURVATURE TO STREET OR SIDEWALK MIGHT BE ADDED WHERE APPROPRIATE TO PRESERVE EXISTING TREES OR POWER POLE LOCATIONS. CURVATURE AT CROSS-INTERSECTIONS IS REQUIRED TO BRING ROADWAY CENTERLINE BACK TO RIGHT-OF-WAY CENTERLINE. SIDEWALK MAY BE ADJACENT TO THE ROADWAY AT SOME LOCATIONS.

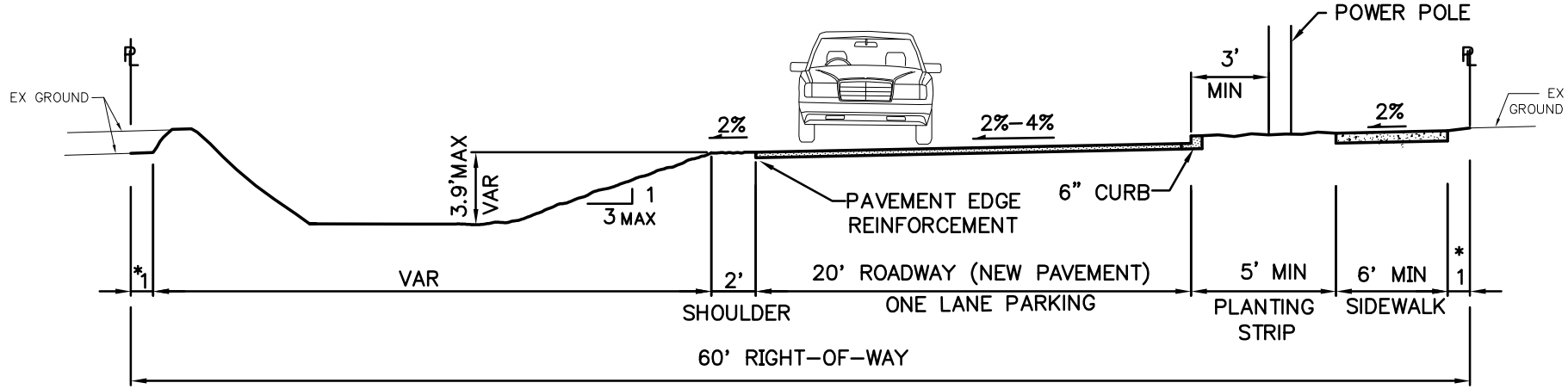

* Contingency space, not required

SEATTLE RIGHT-OF-WAY manual

NDS CONCEPTUAL DESIGN, CROSS-SECTION FOR FULL STREET IMPROVEMENT

OFFSET, FLUSH CURB, PARKING ON ONE SIDE

JULY 2008

FIGIRE

6–12

P:\Utility\C333206_Std_Details\Plot Files\12 C333206_P12.dwg

NOTES: CURVATURE TO STREET OR SIDEWALK MIGHT BE ADDED WHERE APPROPRIATE TO PRESERVE EXISTING TREES OR POWER POLE LOCATIONS. CURVATURE AT CROSS-INTERSECTIONS IS REQUIRED TO BRING ROADWAY CENTERLINE BACK TO RIGHT-OF-WAY CENTERLINE. SIDEWALK MAY BE ADJACENT TO THE ROADWAY AT SOME LOCATIONS.

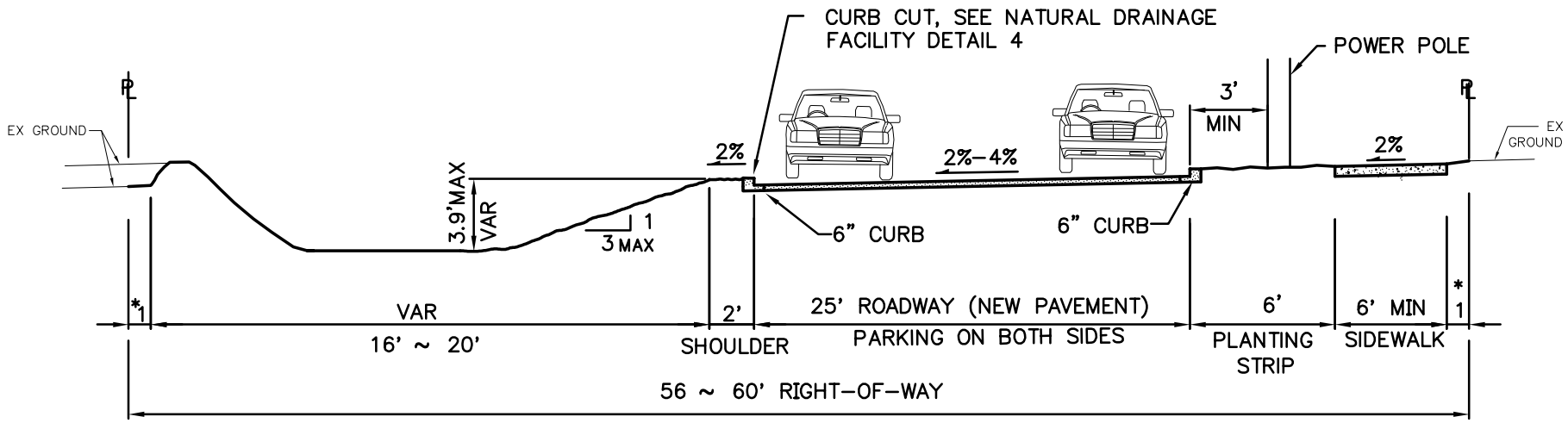

* Contingency space, not required

SEATTLE RIGHT-OF-WAY manual

JULY 2008

NDS CONCEPTUAL DESIGN, CROSS-SECTION FOR FULL STREET IMPROVEMENT

CURB, GUTTER, OFFSET, PARKING ON BOTH SIDES

FIGIRE

6-13

P:\Utility\C333206_Std_Details\Plot Files\13 C333206_P13.dwg

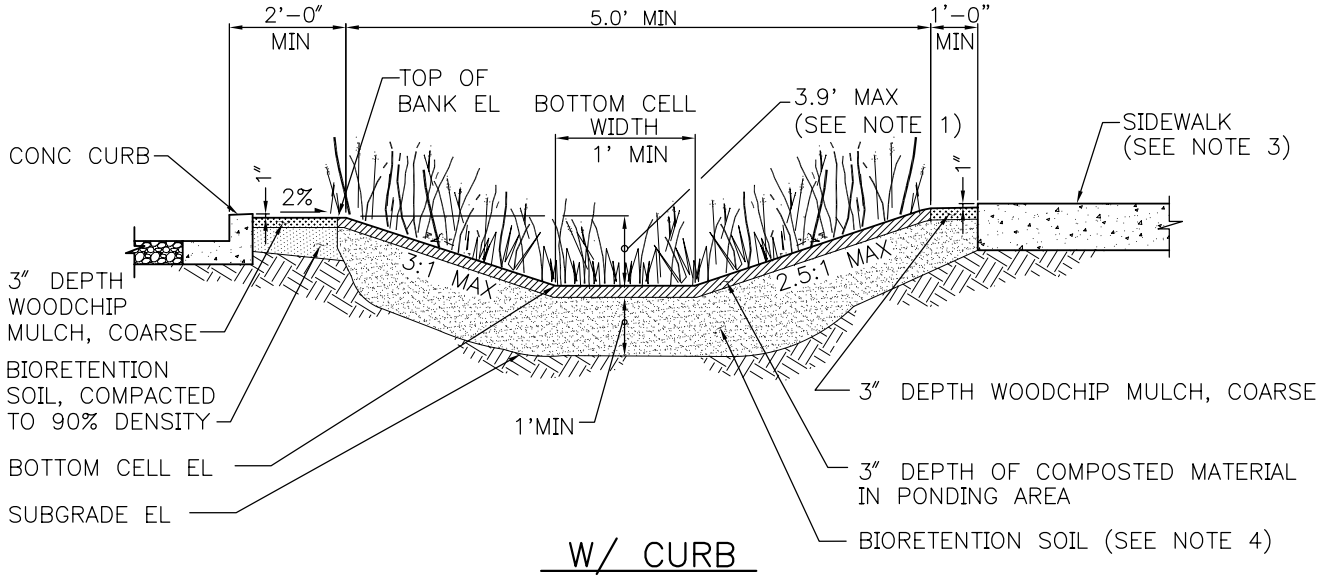

W/ CURB

NTS

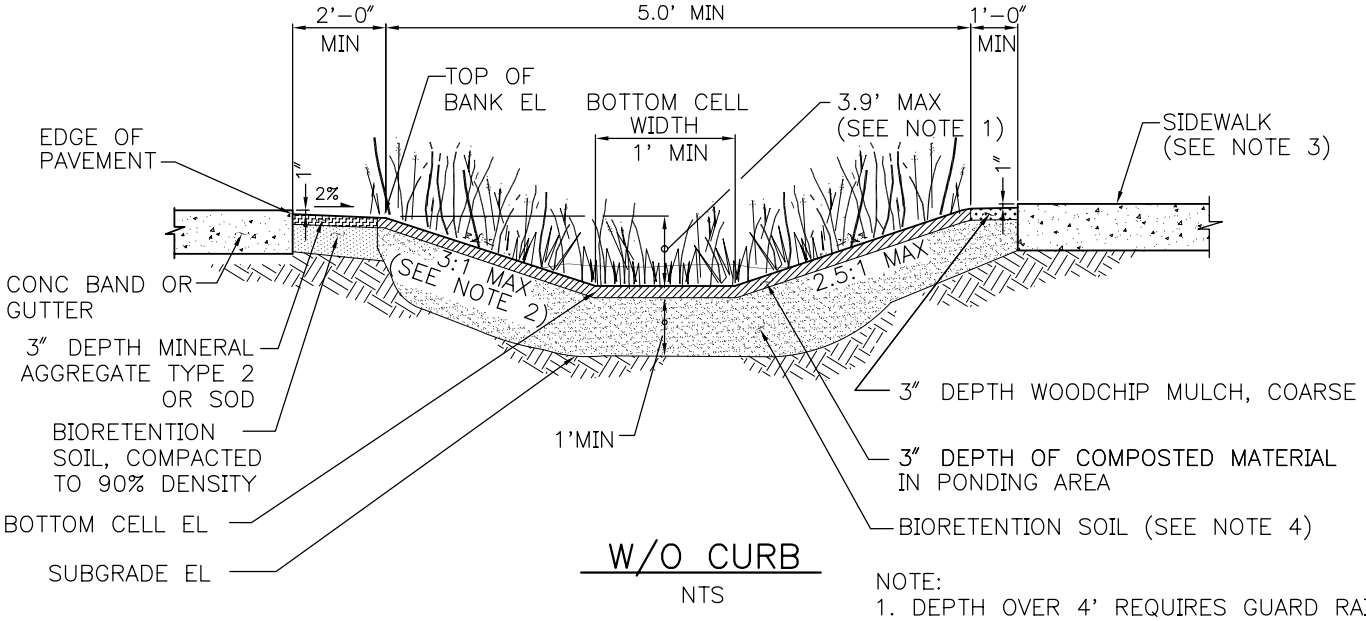

W/O CURB

NTS

NOTE:
1. DEPTH OVER 4' REQUIRES GUARD RAIL.
2. 4:1 MAX WHEN WITHIN 50–FEET OF INTERSECTIONS
3. SIDEWALK ELEVATION MUST BE SET ABOVE OVERFLOW ELEVATIONS.
4. SCARIFY SUBGRADE 3" MIN BEFORE BIORETENTION SOIL INSTALLATION.

APPLICATION OF THESE DETAILS REQUIRE APPROVAL FROM SDOT AND SPU.

SEATTLE RIGHT-OF-WAY manual

BIORETENTION, BIOFILTRATION CELL

FIGURE

6–15

JANUARY 2010

P:\Utility\c333206_std_details\plot files\15 C333206_P15.dwg
HwangC Feb–07–11 10:02am Xrefs: | TitleBlock–letter | NDS_Bioretention_Swale |

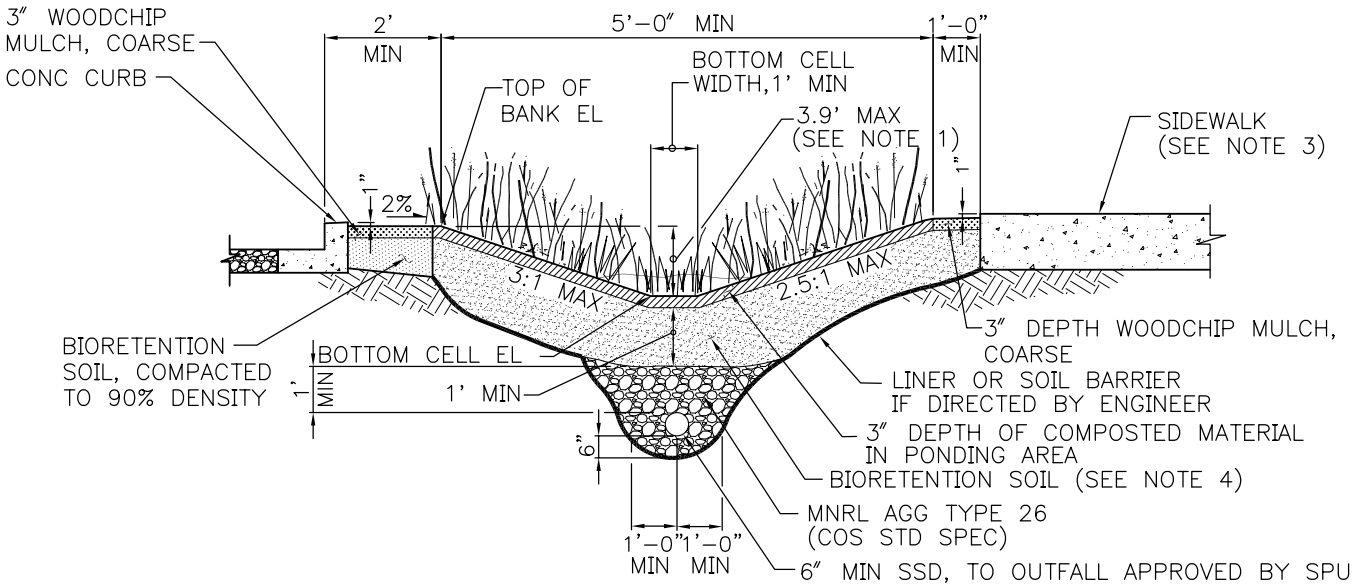

W/ CURB
NTS

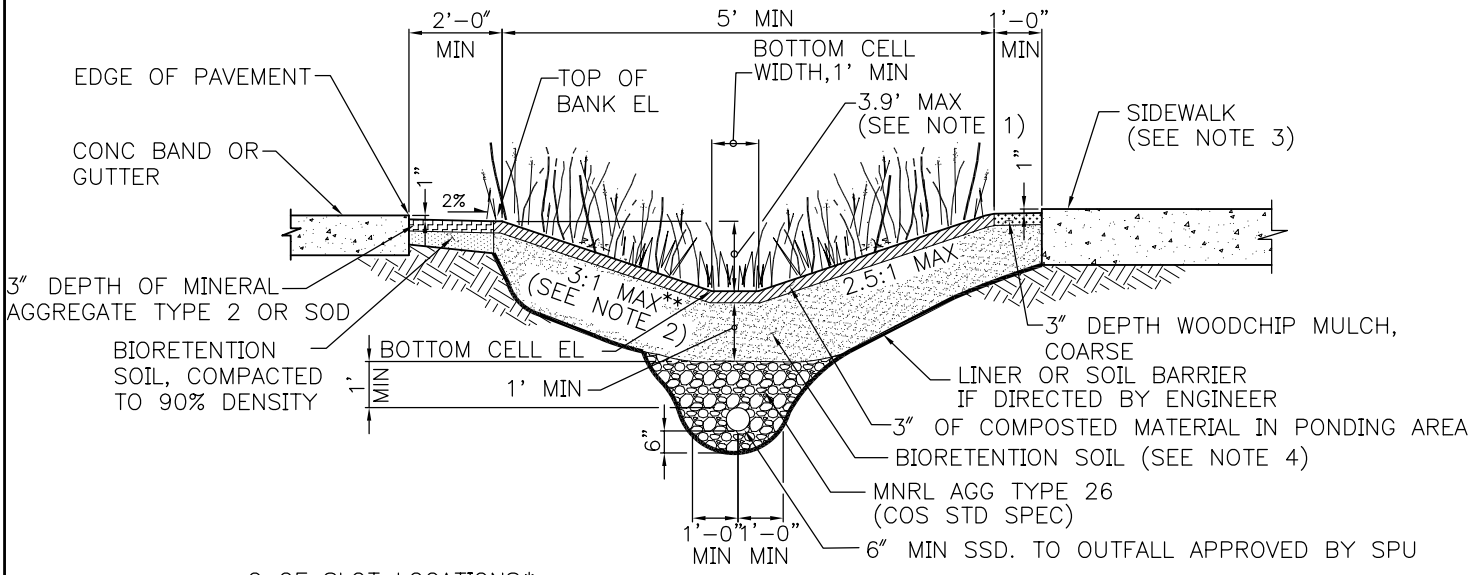

W/O CURB
NTS

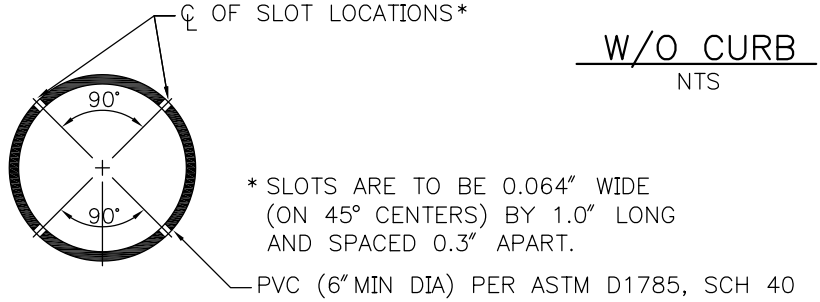

SSD SLOT DETAIL
NTS

NOTE:
1. DEPTH OVER 4' REQUIRES GUARD RAIL.
2. 4:1 MAX WHEN WITHIN 50-FEET OF INTERSECTIONS
3. SIDEWALK ELEVATION MUST BE SET ABOVE OVERFLOW ELEVATIONS.
4. SCARIFY SUBGRADE 3" MIN BEFORE BIORETENTION SOIL INSTALLATION.

APPLICATION OF THESE DETAILS REQUIRE APPROVAL FROM SDOT AND SPU.

SEATTLE RIGHT-OF-WAY manual

BIORETENTION, BIOFILTRATION CELL W/UNDER DRAIN

JANUARY 2010

FIGURE 6-16

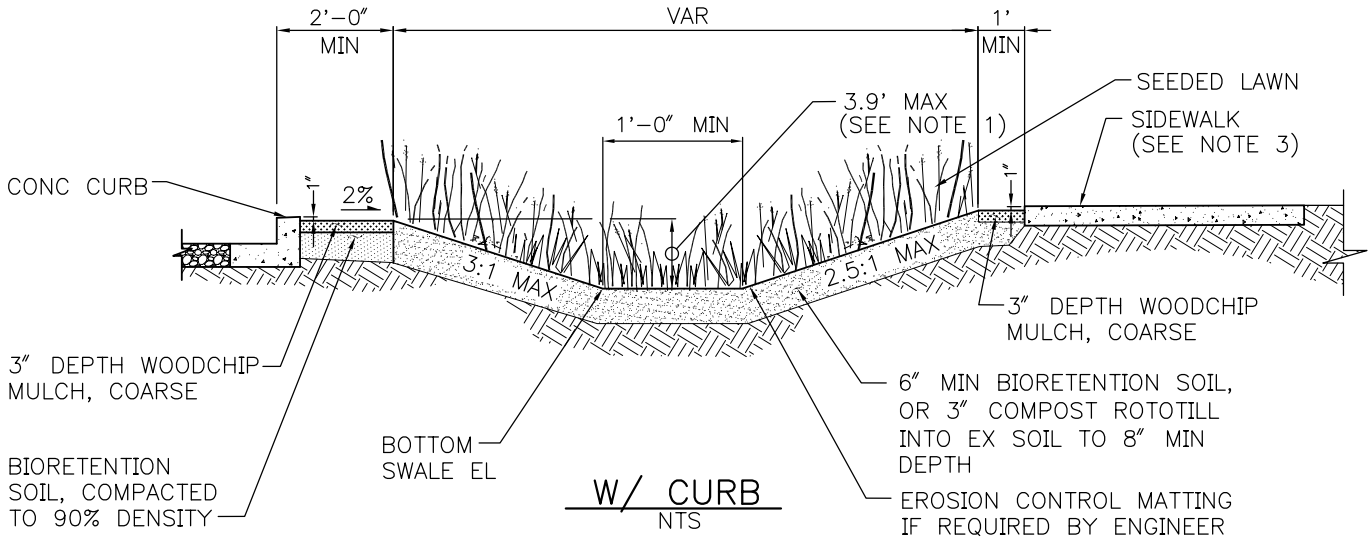

W/ CURB
NTS

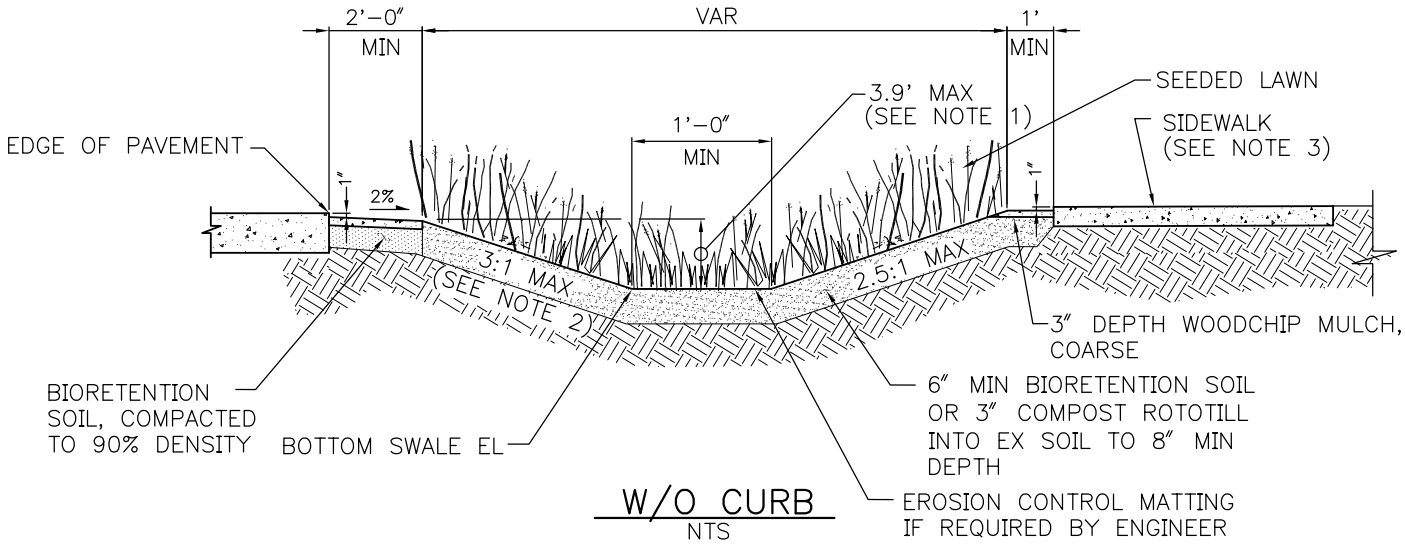

W/O CURB
NTS

NOTE:
1. DEPTH OVER 4' REQUIRES GUARD RAIL.
2. 4:1 MAX WHEN WITHIN 50–FEET OF INTERSECTIONS
3. SIDEWALK ELEVATION MUST BE SET ABOVE OVERFLOW ELEVATIONS.
4. LONGITUDINAL SLOPE ≥4% CHECK DAM REQUIRED.

APPLICATION OF THESE DETAILS REQUIRE APPROVAL FROM SDOT AND SPU.

SEATTLE RIGHT-OF-WAY manual

CONVEYANCE SWALE

FIGURE
6–17

JANUARY 2010

P:\Utility\c333206_std_details\plot files\17 C333206_P17.dwg
HwangC Feb–07–11 10:04am Xrefs: | TitleBlock–letter | NDS_Conveyance_Swale |

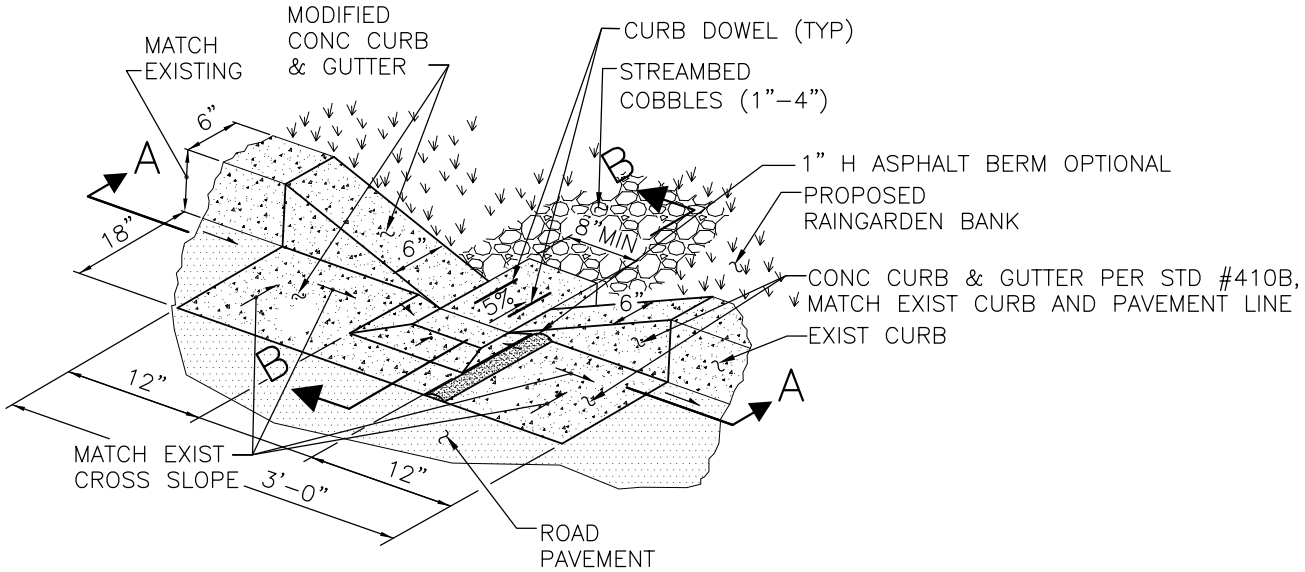

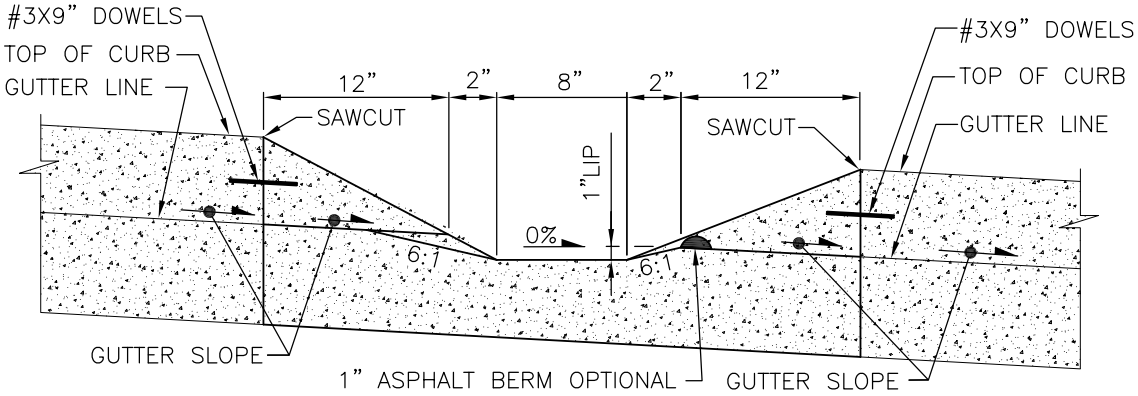

SECTION A–A

SCALE: NTS

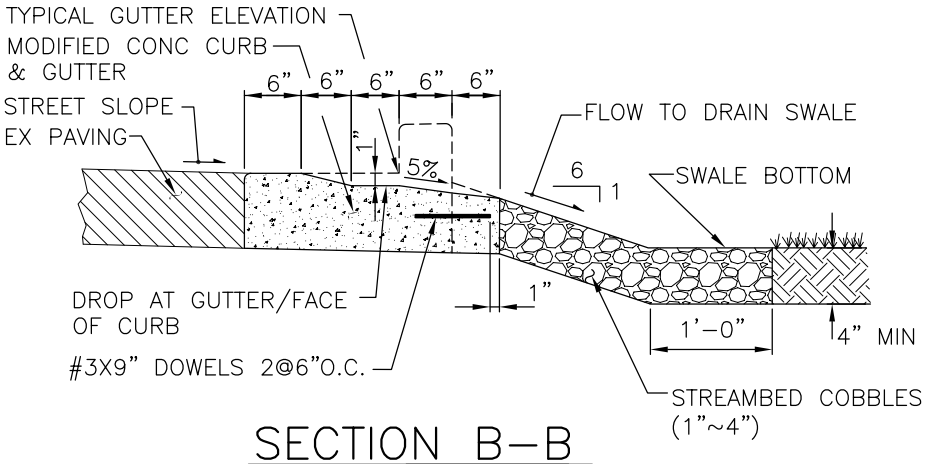

SECTION B–B

SCALE: NTS

APPLICATION OF THESE DETAILS REQUIRE APPROVAL FROM SDOT AND SPU.

SEATTLE RIGHT-OF-WAY manual

CURB DRAIN CUT OPENING FOR SWALE

JANUARY 2010

FIGURE

6–18

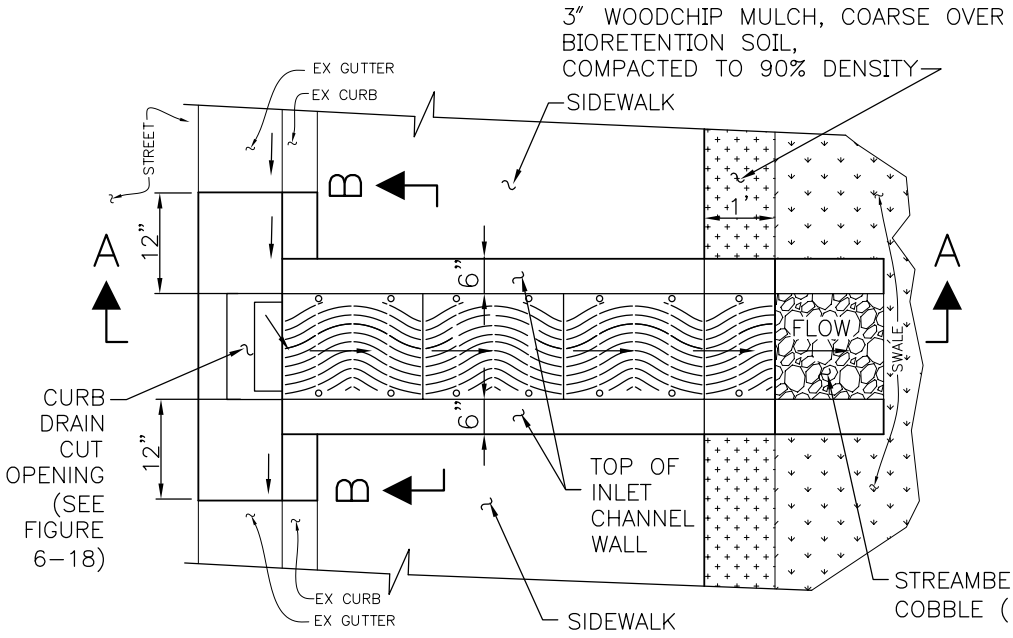

PLAN
NTS

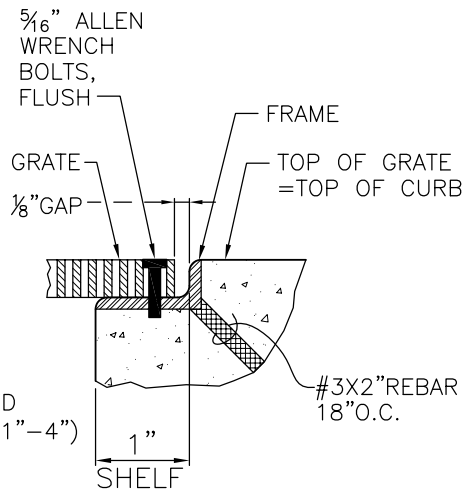

GRATING & FRAME (1 / 6-19)
NTS

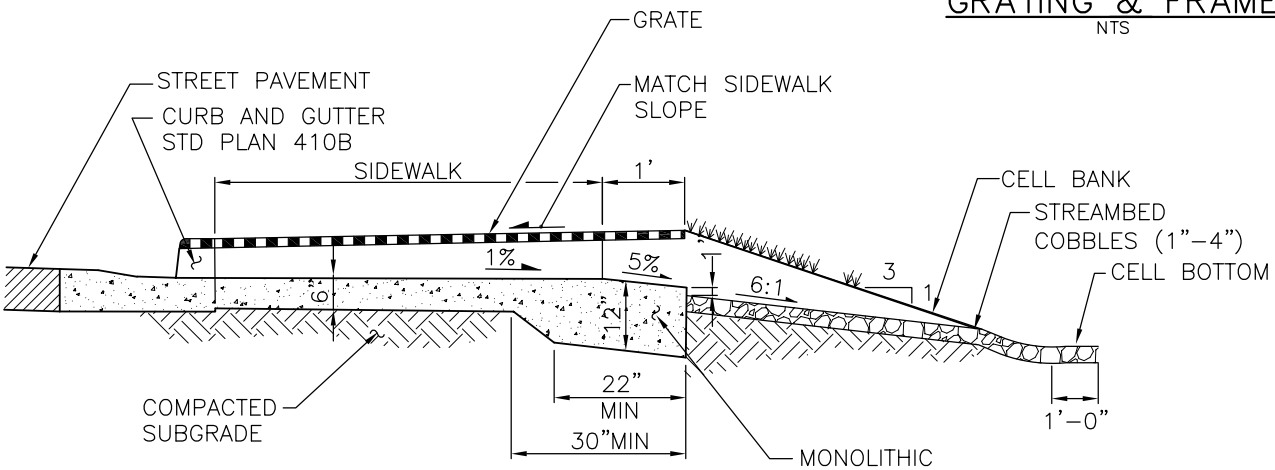

SECTION A-A
NTS

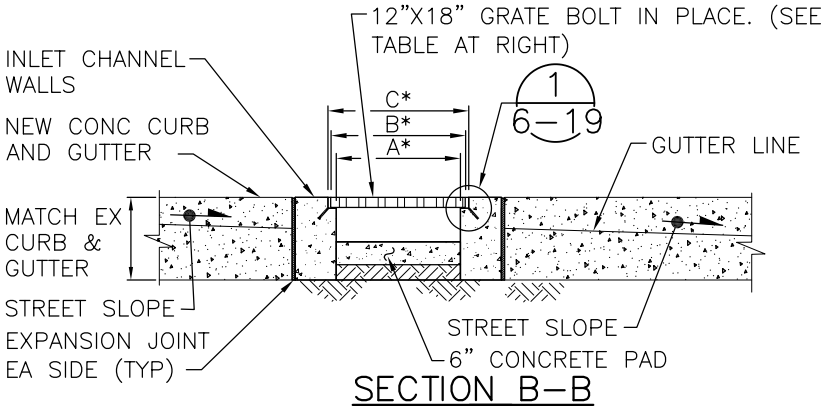

SECTION B-B
NTS

*TRENCH GRATING

A* TRENCH WIDTH	B* GRATE WIDTH	C* FRAME WIDTH
10"	11 7/8"	12 1/8"
16"	17 7/8"	18 1/8"

NOTE: MAXIMUM GRATE HOLE WIDTH (OPEN) 1/4".GRATE SIZE 12"X18" OR 18"X24". CAST IRON URBAN ACCESSORIES TRENCH GRATE AND FRAME. TIDAL WAVE MODEL OR EQUAL.

APPLICATION OF THESE DETAILS REQUIRE APPROVAL FROM SDOT AND SPU.

SEATTLE RIGHT-OF-WAY manual

CONCRETE INLET, CHANNEL & GRATE

JANUARY 2010

FIGURE 6-19

P:\Utility\c333206_std_details\plot files\19 C333206_P19.dwg
HwangC Feb-07-11 10:05am Xrefs: | TitleBlock-letter | ConcInlet_Channel_Grate |

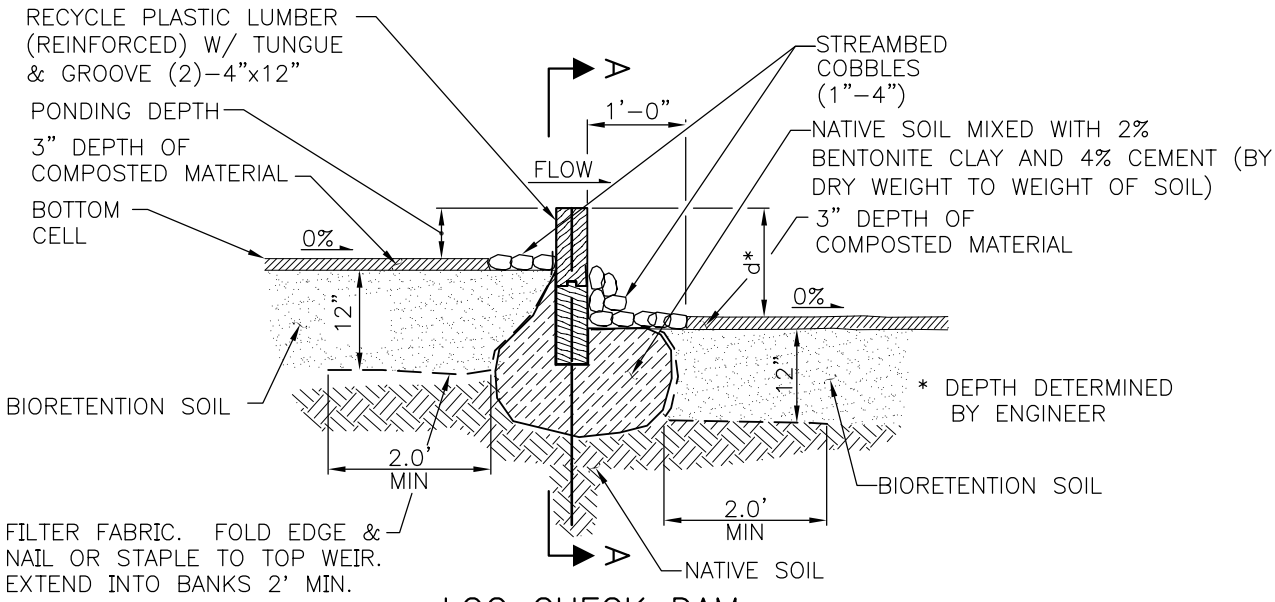

LOG CHECK DAM
NTS

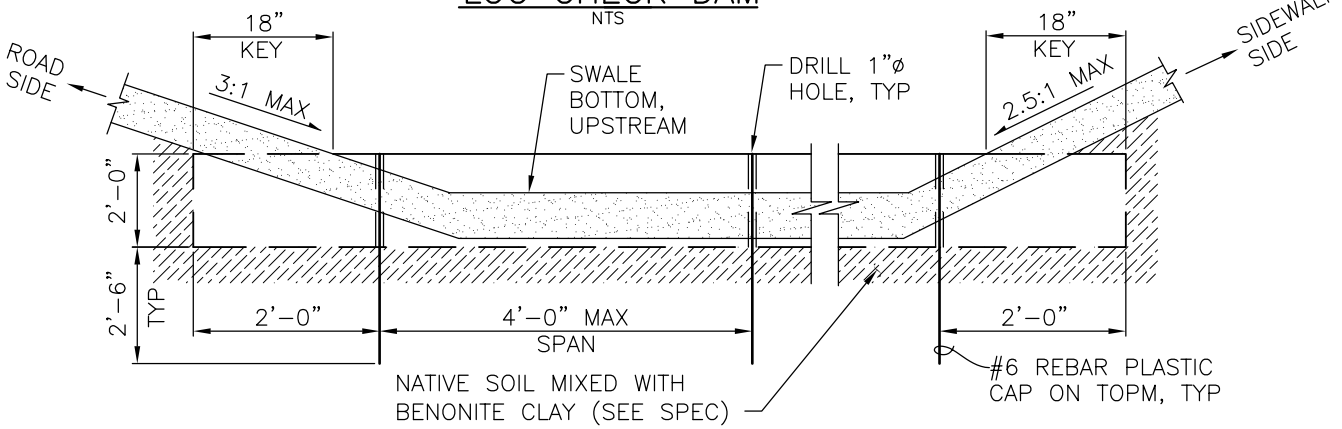

SECTION A–A
NTS

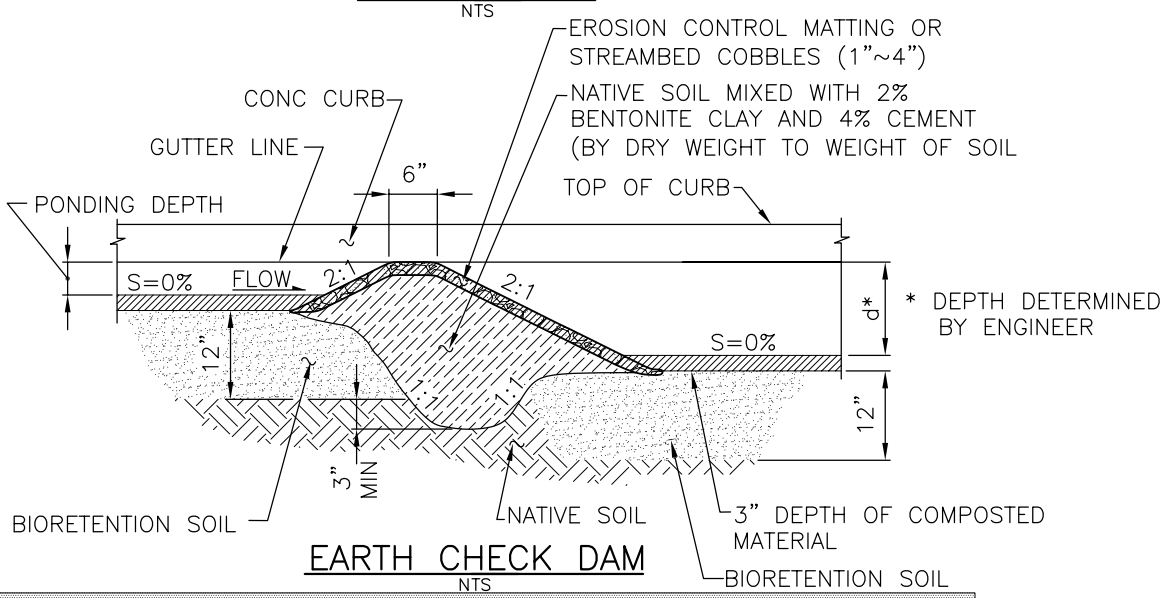

EARTH CHECK DAM
NTS

APPLICATION OF THESE DETAILS REQUIRE APPROVAL FROM SDOT AND SPU.

SEATTLE RIGHT-OF-WAY manual

CHECK DAM

JANUARY 2010

FIGURE

6–20

P:\Utility\c333206_std_details\plot files\20 C333206_P20.dwg
HwangC Feb–07–11 10:05am Xrefs: | TitleBlock–letter | Check_Dam_Detl |

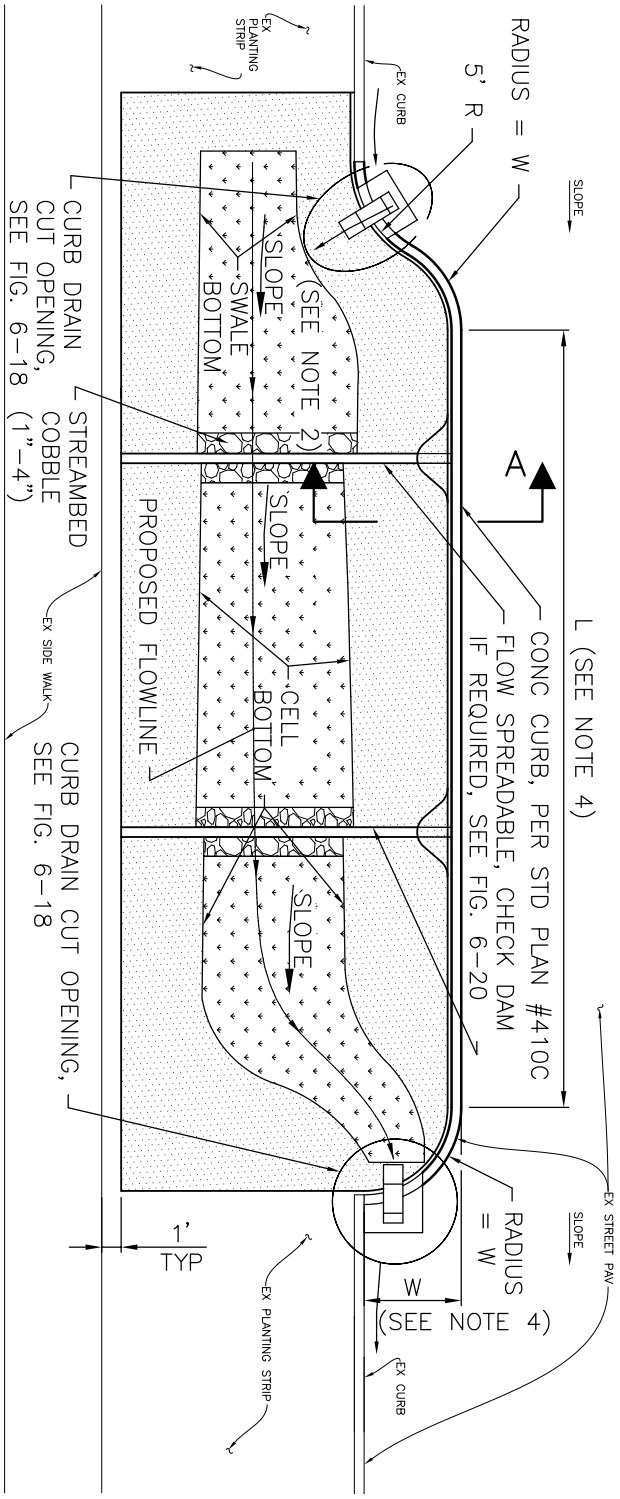

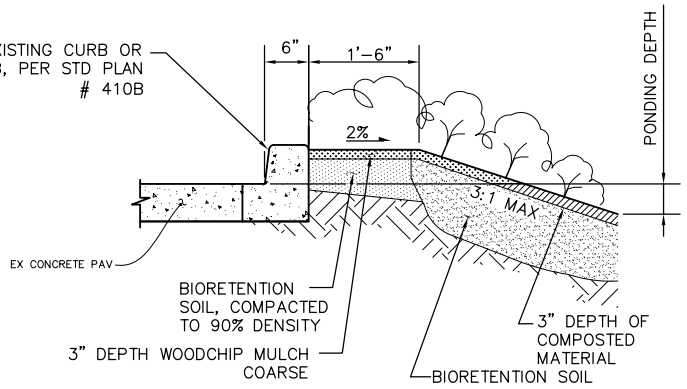

SECTION A–A
NTS
(ADJACENT TO PARKING ZONE)

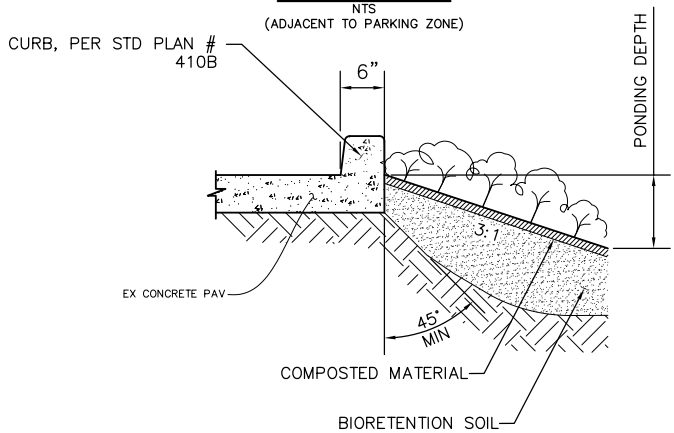

SECTION A–A
NTS
(ADJACENT TO NON–PARKING ZONE)

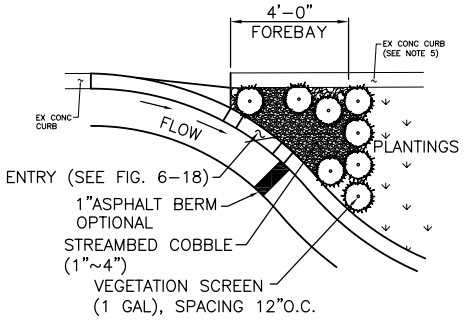

FORBAY DETAIL

NOTES:

1. SUITABLE FOR STREET LONGITUDINAL SLOPE OF LESS THAN 6%.
2. PLANTER BOTTOM SLOPE: 0% FOR BIORETENTION, 1.5% FOR BIOFILTRATION OR DETERMINED BY ENGINEER.
3. SIDEWALK ELEVATION MUST BE SET ABOVE INLET AND OUTLET ELEVATIONS TO ALLOW OVERFLOW TO DRAIN TO STREET.
4. LENGTH (L) AND WIDTH (W) DETERMINED BY ENGINEER.
5. WHERE FEASIBLE WIDTH OF STORMWATER FACILITY MAY EXTEND INTO EXISTING PLANTING STRIP, IN WHICH CASE, EXISTING CURB WOULD BE REMOVED.

APPLICATION OF THESE DETAILS REQUIRE APPROVAL FROM SDOT AND SPU.

SEATTLE RIGHT-OF-WAY manual

CURB EXTENSION

FIGURE 6–21

JANUARY 2010

P:\Utility\c333206_std_details\plot files\21 C333206_P21.dwg
HwangC Feb–07–11 10:06am Xrefs: | TitleBlock–letter | Curb_Extension |

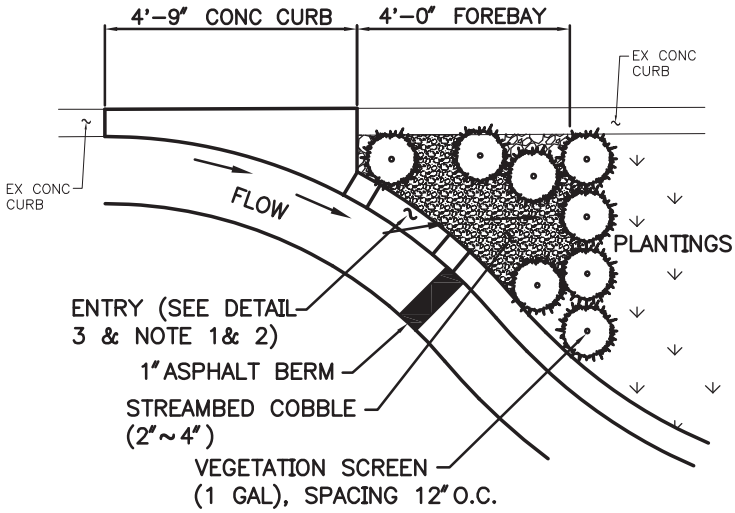

PEA GRAVEL FOREBAY 1 / 6–21A
NTS

NOTES:

1. STREAMBED COBBLE FOREBAY FOR USE WITH STORMWATER CURB EXTENSIONS ONLY.
2. TO PREVENT PONDING, POSITION INLET CLOSER TO EXISTING CURB IF THE STREET CROSS–SLOPE IS >2%. ADDITIONAL INLETS CAN BE ADDED IF NECESSARY (PREFERABLY IMMEDIATELY DOWNSTREAM OF EACH CHECK DAM TO MINIMIZE POTENTIAL BACKFLOW). ADDITIONAL INLETS ARE NOT RECOMMENDED FOR STREETS SLOPED<1%.

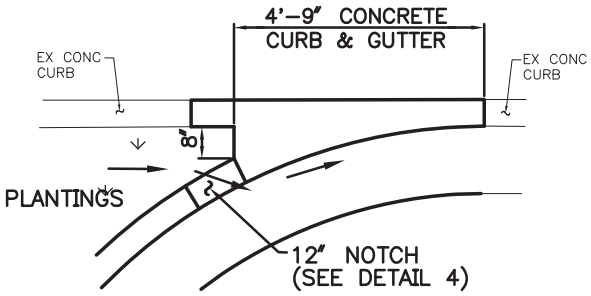

OUTLET CURB 2 / 6–21A
NTS

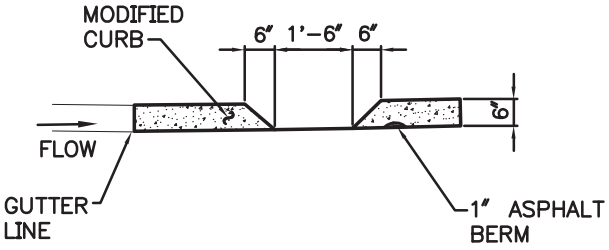

INLET 3 / 6–21A
NTS

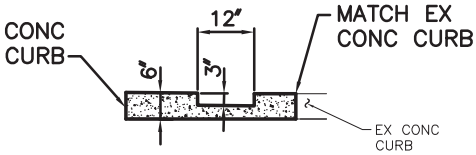

OUTLET 4 / 6–21A
NTS

APPLICATION OF THESE DETAILS REQUIRE APPROVAL FROM SDOT AND SPU.

SEATTLE RIGHT-OF-WAY manual

NATURAL DRAINAGE SYSTEM DETAIL

CURB EXTENSION INLET / OUTLET DETAILS

JULY 2008

FIGURE

6–21A

P:\Utility\C333206_Std_Details\Plot Files\21A C333206_P21A.dwg

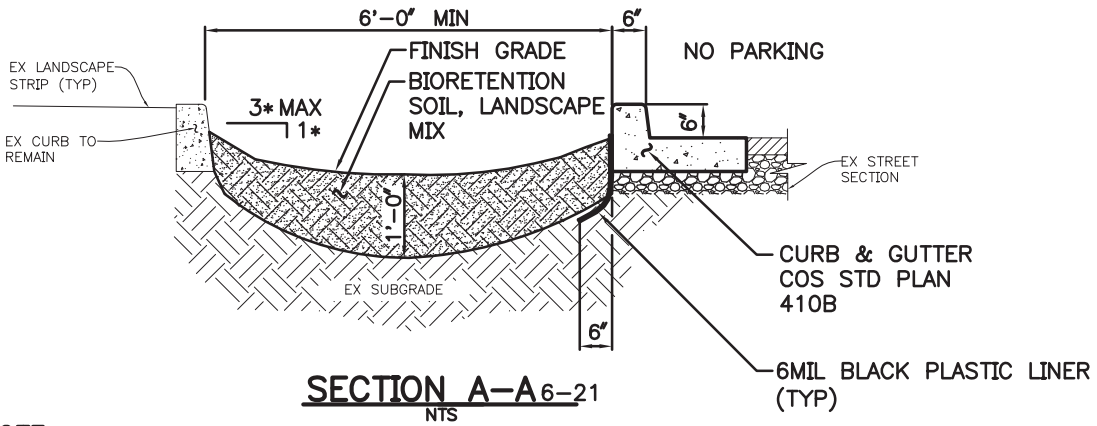

SECTION A–A 6–21
NTS

NOTE:

* IF STORMWATER CURB EXTENSION IS CONSTRUCTED NEXT TO AN EXISTING SIDEWALK, SOIL ELEVATION MUST BE BROUGHT TO TOP OF CURB AND SLOPE AWAY FROM CURB AT A 4:1 MAX SLOPE.

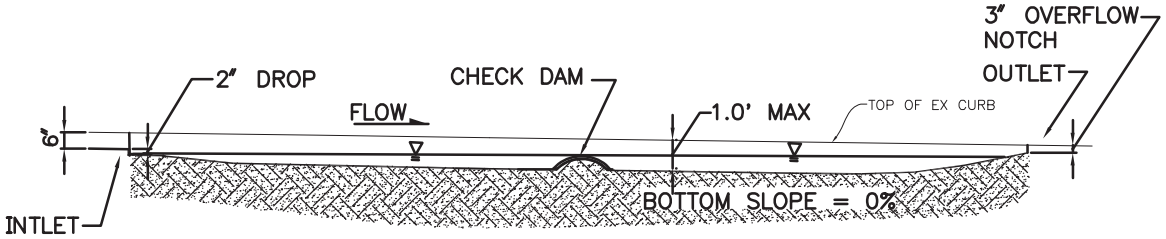

SECTION B–B 6–21
NTS

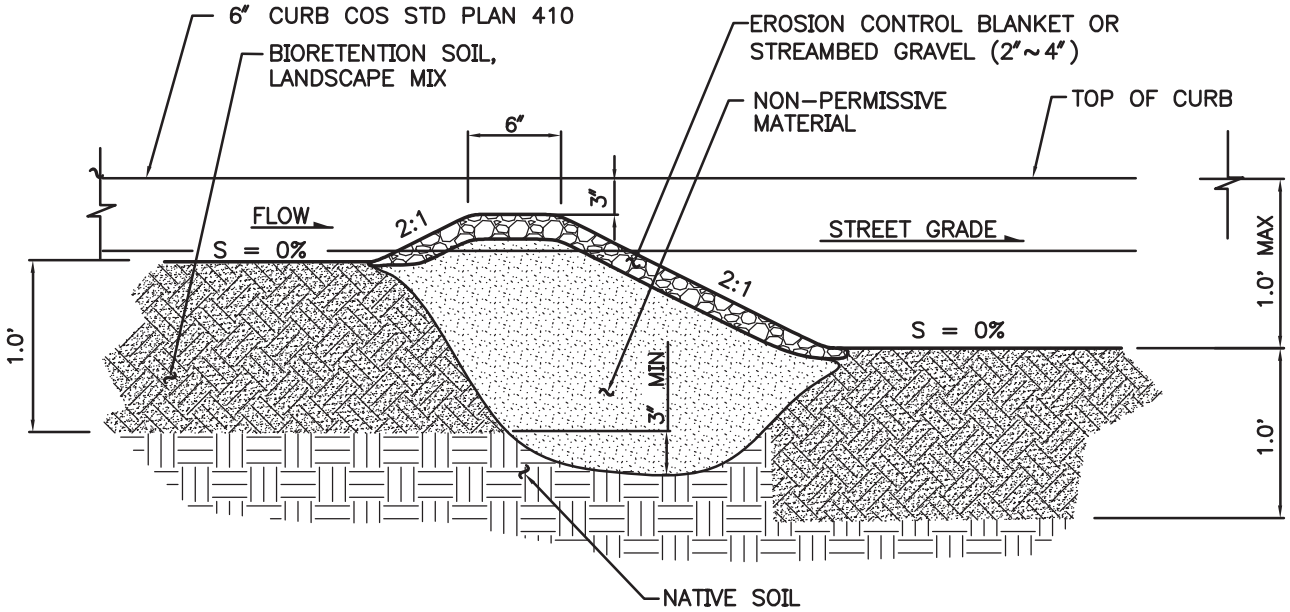

CHECK DAM DETAIL
NTS

APPLICATION OF THESE DETAILS REQUIRE APPROVAL FROM SDOT AND SPU.

SEATTLE RIGHT-OF-WAY manual

NATURAL DRAINAGE SYSTEM DETAIL

CURB EXTENSION SECTIONS

JULY 2008

FIGURE

6–21B

P:\Utility\C333206_Std_Details\Plot Files\21B C333206_P21B.dwg

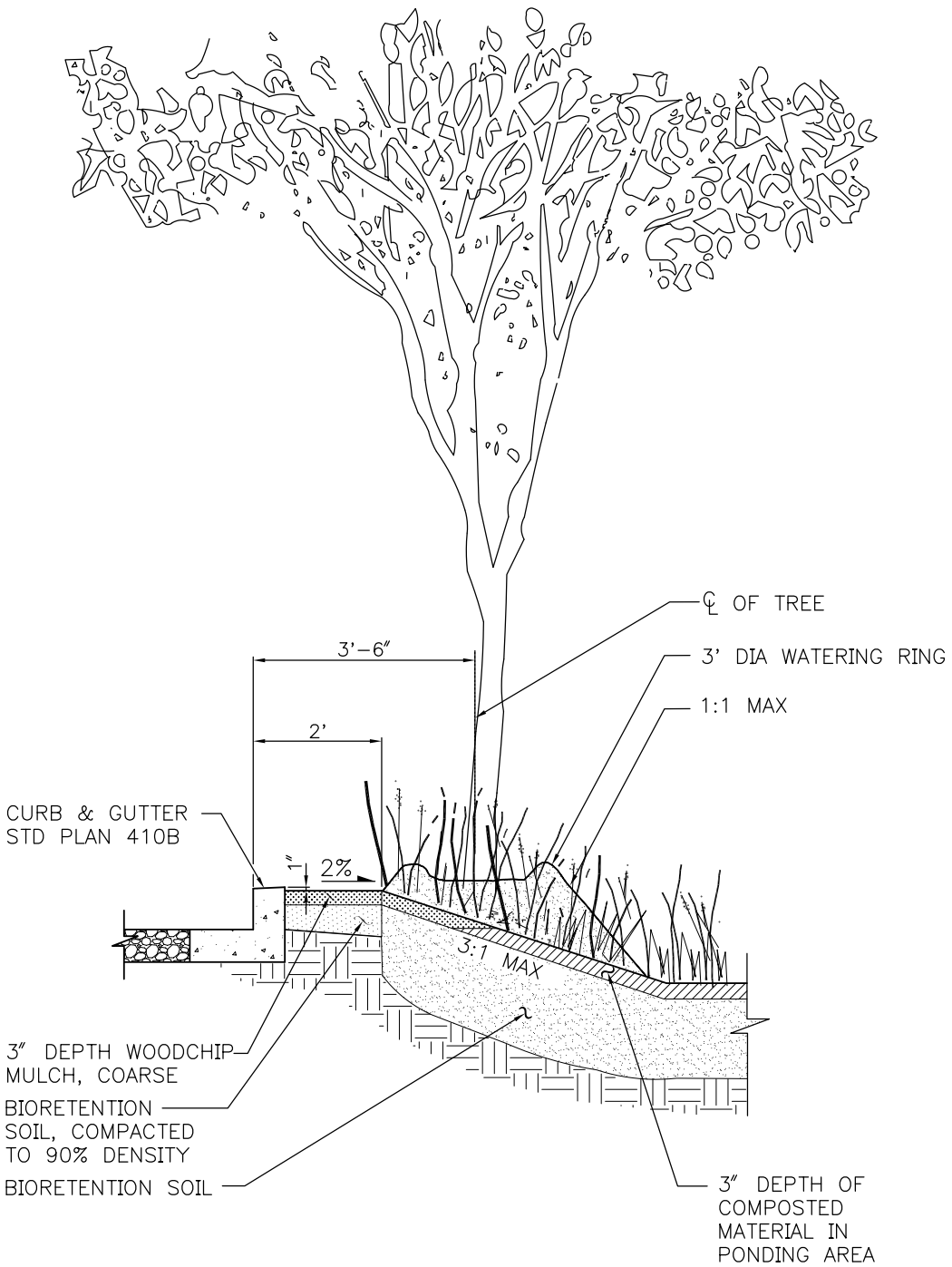

APPLICATION OF THESE DETAILS REQUIRE APPROVAL FROM SDOT AND SPU.

SEATTLE RIGHT-OF-WAY manual

TREE PLANTING WITHIN BIORETENTION SWALE

JANUARY 2010

FIGURE

6-22

P:\Utility\c333206_std_details\plot files\22 C333206_P22.dwg
HwangC Feb-07-11 10:06am Xrefs: | TitleBlock-letter | Tree Planting Plan Within Bioretention Swale |

NOTES:

1. DEPTH OF AGGREGATE DISCHARGE SUBBASE SHALL BE DETERMINED BY ENGINEER IF USED AS FACILITY (SEE 6.4.2 OF STORMWATER MANUAL, VOLUME 3). WHERE POROUS SIDEWALK IS WITHIN THE CRITICAL ROOT ZONE OF TREES THAT ARE REQUIRED TO BE SAVED, REDUCE AGGREGATE DISCHARGE SUBBASE TO 2″.
2. DEPTHS SHOWN FOR PAVEMENT SECTIONS ARE COMPACTED DEPTHS.
3. SIDEWALK DEPTH AT DRIVEWAY TO MATCH DRIVEWAY PAVEMENT DEPTH.
4. DEPTH OF AGGREGATE SHALL BE 6″ MIN. IF USED AS FACILITY ADDITIONAL DEPTH SHALL BE DESIGNED BY ENGINEER.

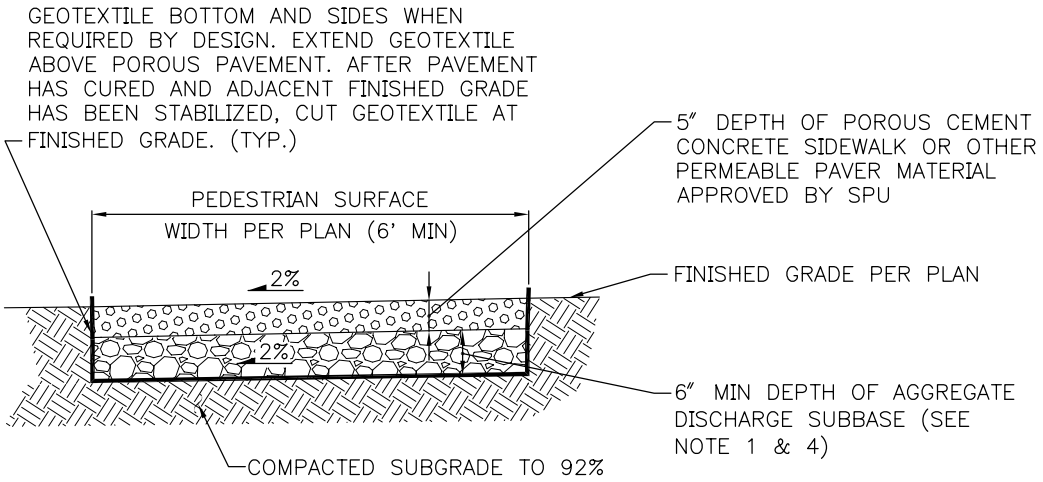

SECTION A – PERMEABLE PAVEMENT SECTION

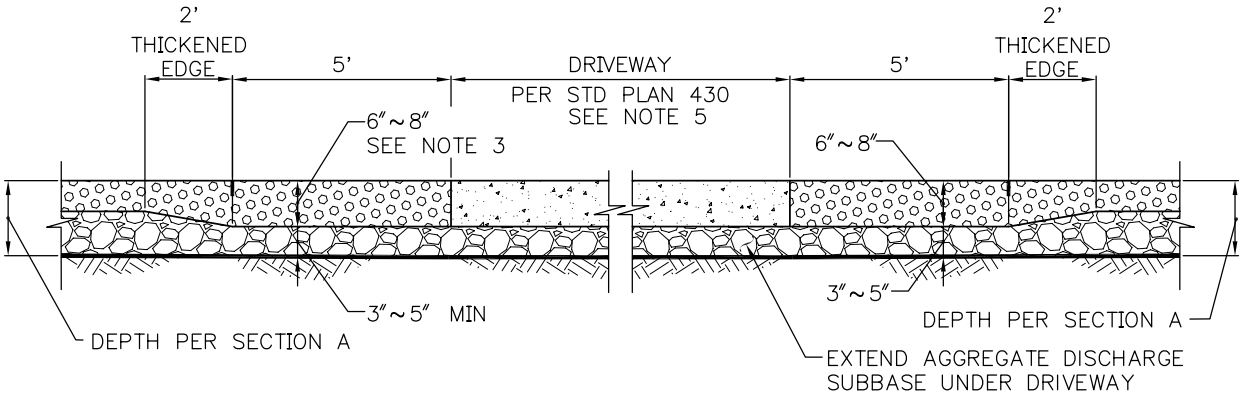

SECTION B – SIDEWALK DEPTH TRANSITION AT DRIVEWAYS

APPLICATION OF THESE DETAILS REQUIRE APPROVAL FROM SDOT AND SPU.

SEATTLE RIGHT-OF-WAY manual

PERMEABLE PAVEMENT SIDEWALK

JANURARY 2010

FIGURE

6–23

P:\Utility\C333206_Std_Details\Plot Files\23 C333206_P23.dwg
BeckC Apr–27–10 2:45pm Xrefs: | TitleBlock–letter | Porous_Conc_Walk |

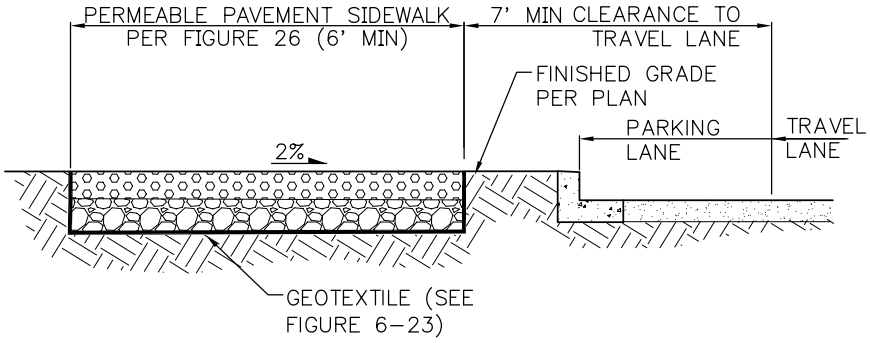

PERMEABLE PAVEMENT SIDEWALK ADJACENT TO CURB

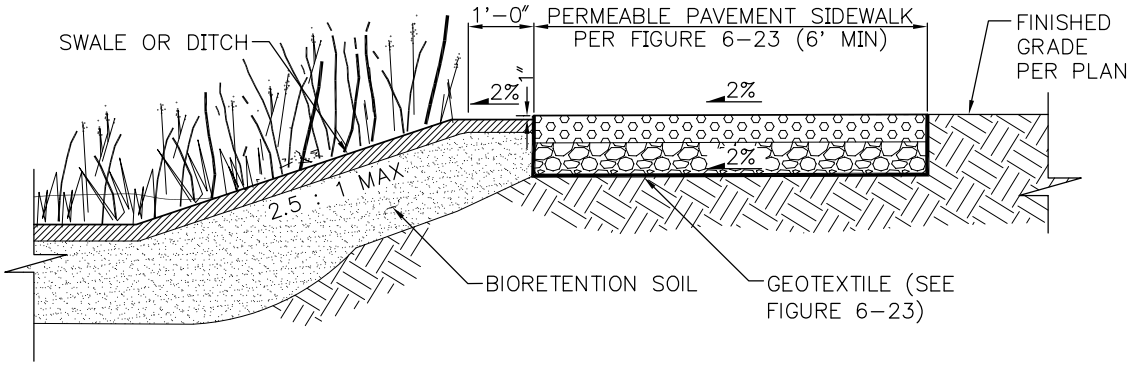

PERMEABLE PAVEMENT SIDEWALK ADJACENT TO SWALE OR DITCH

NOTE: PERMEABLE PAVEMENT FACILITIES ARE FOR LONGITUDINAL SLOPE OF 0 ~ 5% ONLY. TO MAXIMIZE THE PONDING CAPACITY USE OF CHECK DAM OR OTHER METHOD ARE RECOMMENDED. (SEE FIGURE 6-25 FOR DETAIL).

APPLICATION OF THESE DETAILS REQUIRE APPROVAL FROM SDOT AND SPU.

SEATTLE RIGHT-OF-WAY manual

PERMEABLE PAVEMENT FACILITY ,SIDEWALK

JANURARY 2010

FIGURE

6-24

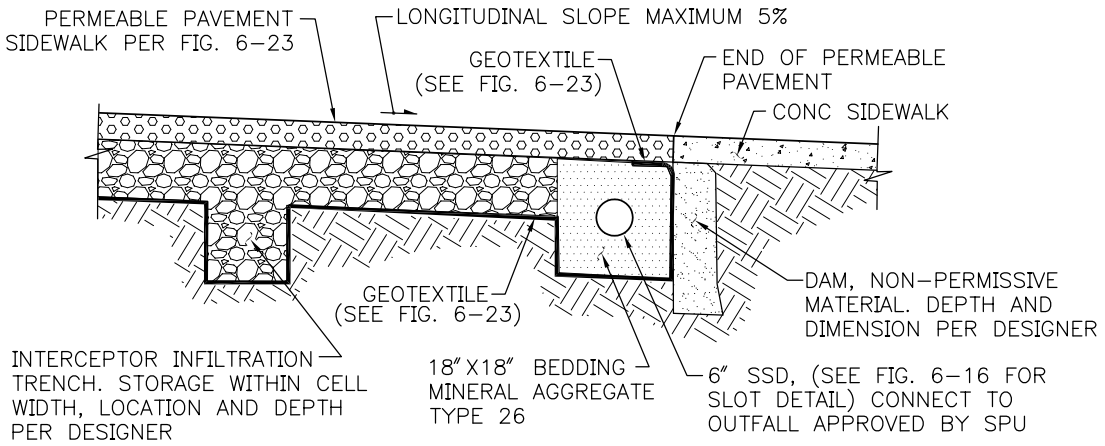

INTERCEPTOR INFILTRATION TRENCH

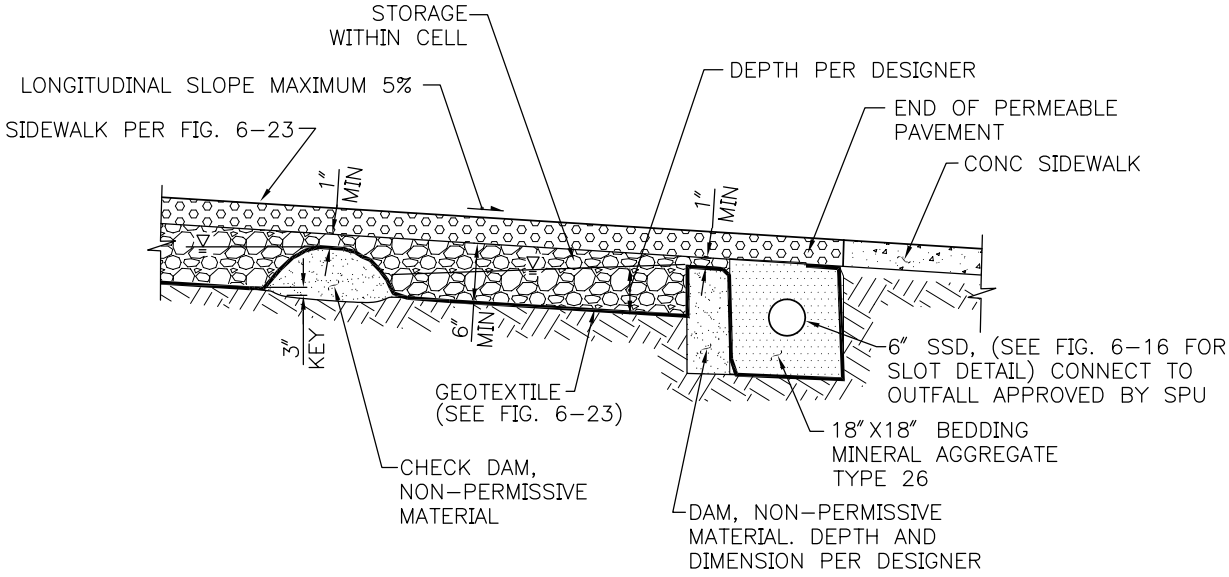

CHECK DAM

APPLICATION OF THESE DETAILS REQUIRE APPROVAL FROM SDOT AND SPU.

SEATTLE RIGHT-OF-WAY manual

PERMEABLE PAVEMENT FACILITY, SIDEWALK CHECK DAM, INTERCEPTER

JANURARY 2010

FIGURE

6–25

P:\Utility\C333206_Std_Details\Plot Files\25 C333206_P25.dwg
BeckC Apr–27–10 2:48pm Xrefs: | TitleBlock–letter | Porous_Conc_Walk–2 |

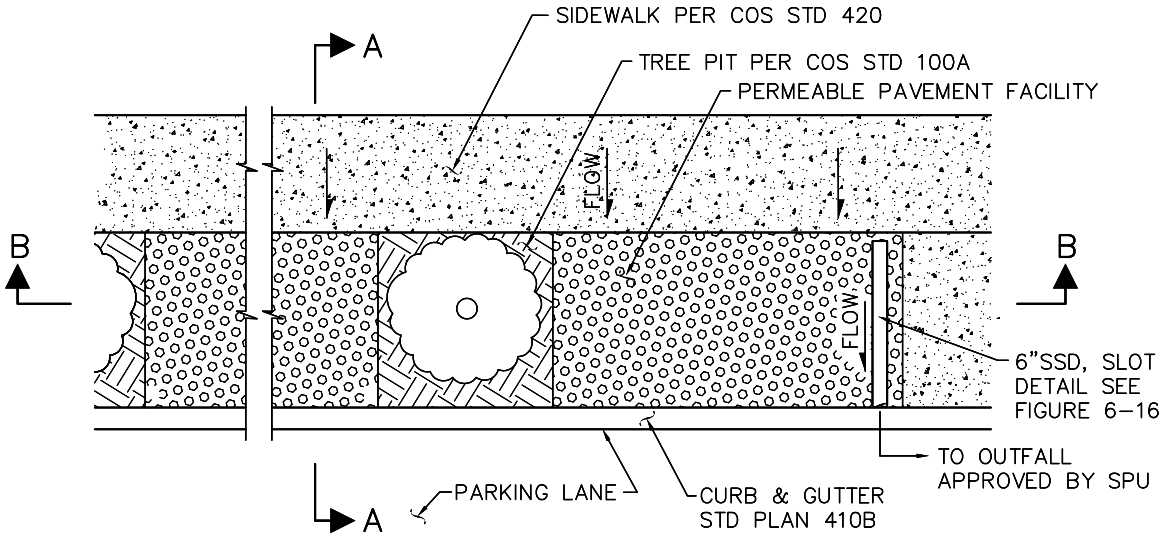

PLAN

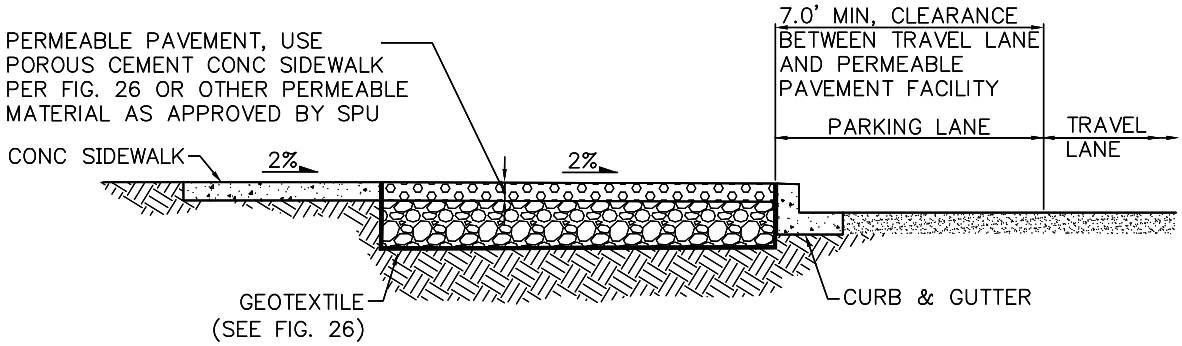

SECTION A–A

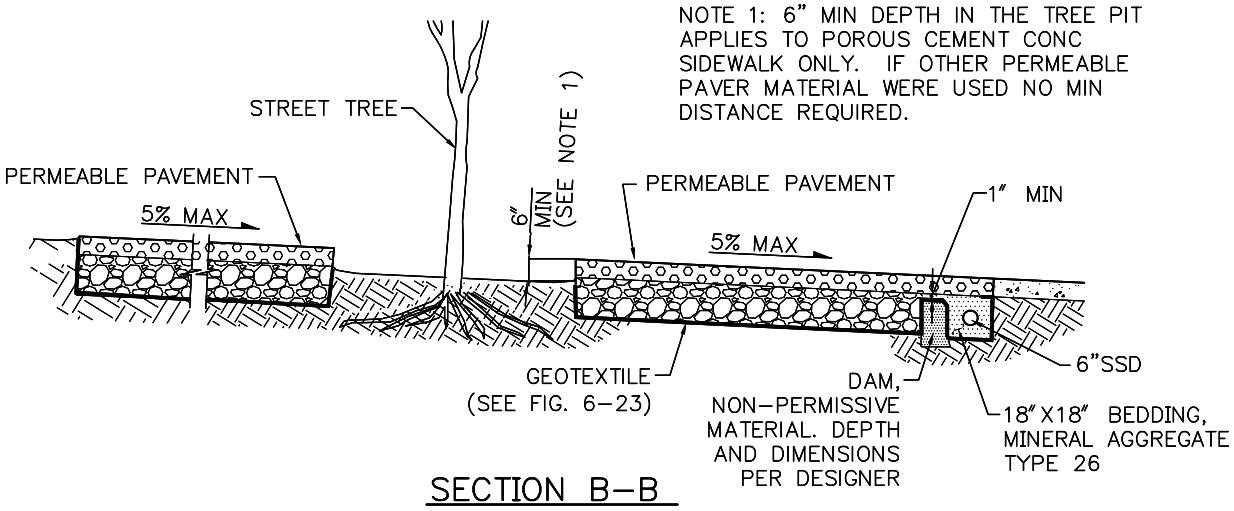

SECTION B–B

APPLICATION OF THESE DETAILS REQUIRE APPROVAL FROM SDOT AND SPU.

SEATTLE RIGHT-OF-WAY manual

PERMEABLE PAVEMENT FACILITY IN PLANTING STRIP

JANURARY 2010

FIGURE

6–26

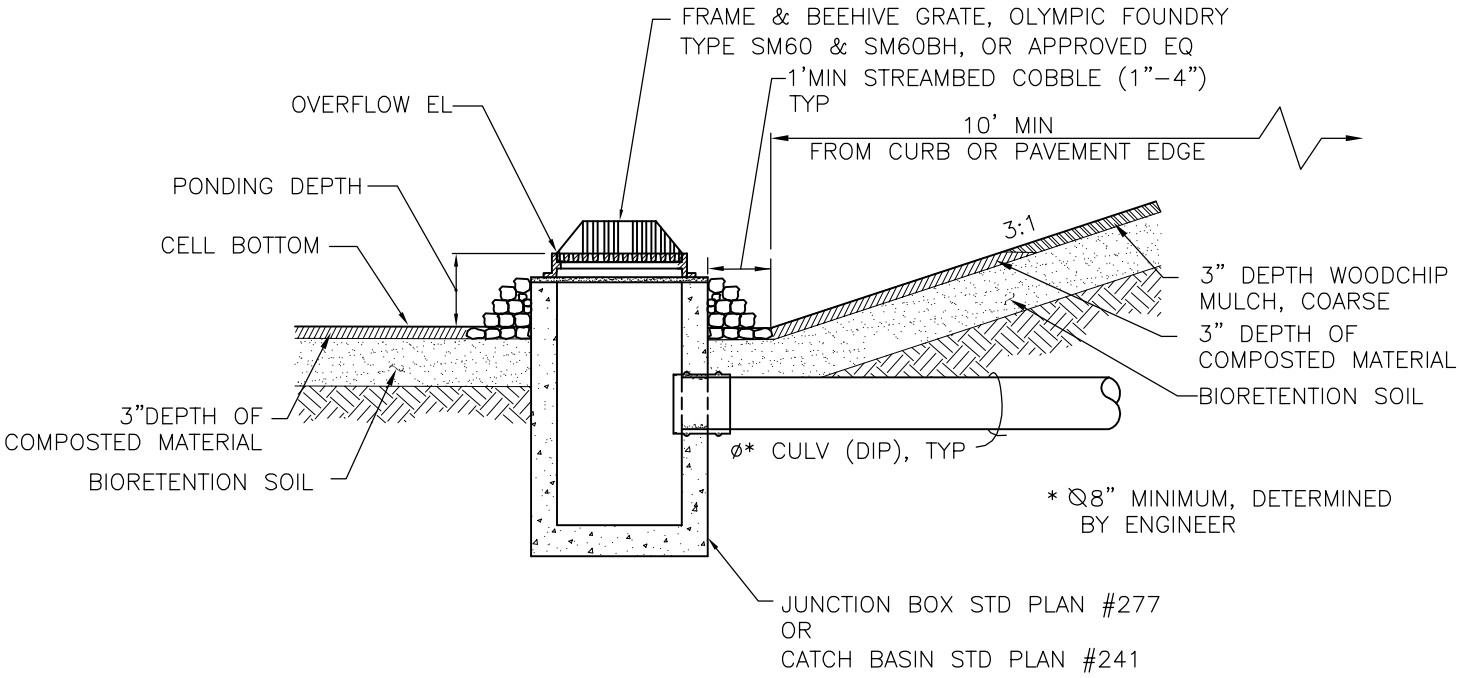

APPLICATION OF THESE DETAILS REQUIRE APPROVAL FROM SDOT AND SPU.

SEATTLE RIGHT-OF-WAY manual

OVER FLOW STRUCTURE

JANUARY 2010

FIGURE

6–27

P:\Utility\c333206_std_details\plot files\27 C333206_P27.dwg
HwangC Feb–08–11 3:04pm Xrefs: | TitleBlock–letter | OverFlow_Structure |

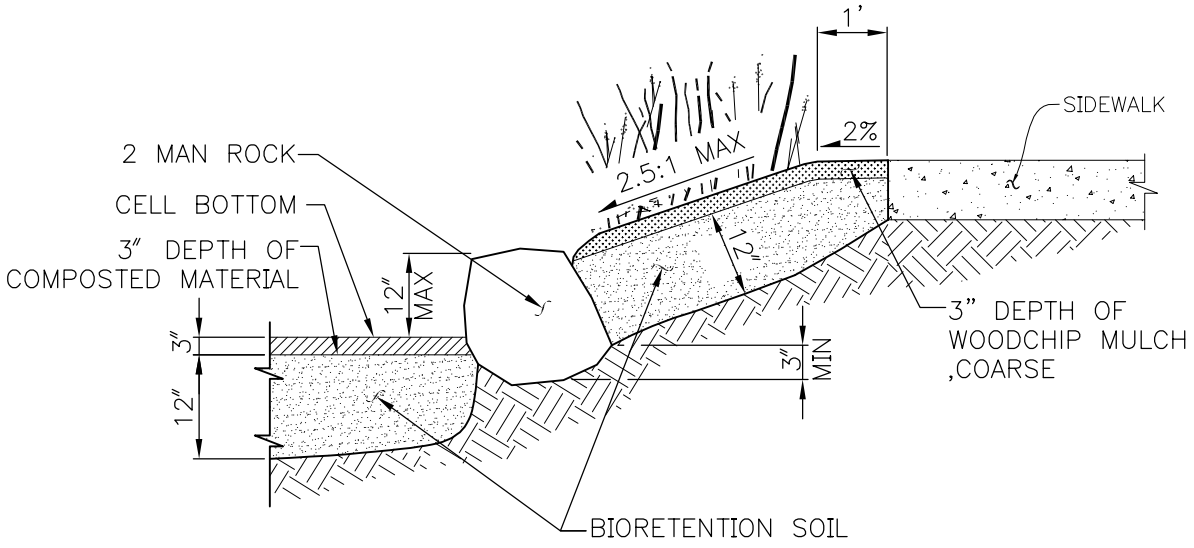

APPLICATION OF THESE DETAILS REQUIRE APPROVAL FROM SDOT AND SPU.

SEATTLE RIGHT-OF-WAY manual

ONE FOOT ROCK FACING

JANUARY 2010

FIGURE

6–28

P:\Utility\C333206_Std_Details\Plot Files\28 C333206_P28.dwg
HwangC Feb–08–11 3:04pm Xrefs: | TitleBlock–letter | DETL_OneFootRockFacing |