NOTES:

1. DEPTH OF AGGREGATE DISCHARGE SUBBASE SHALL BE DETERMINED BY ENGINEER IF USED AS FACILITY (SEE 6.4.2 OF STORMWATER MANUAL, VOLUME 3). WHERE POROUS SIDEWALK IS WITHIN THE CRITICAL ROOT ZONE OF TREES THAT ARE REQUIRED TO BE SAVED, REDUCE AGGREGATE DISCHARGE SUBBASE TO 2″.
2. DEPTHS SHOWN FOR PAVEMENT SECTIONS ARE COMPACTED DEPTHS.
3. SIDEWALK DEPTH AT DRIVEWAY TO MATCH DRIVEWAY PAVEMENT DEPTH.
4. DEPTH OF AGGREGATE SHALL BE 6″ MIN. IF USED AS FACILITY ADDITIONAL DEPTH SHALL BE DESIGNED BY ENGINEER.

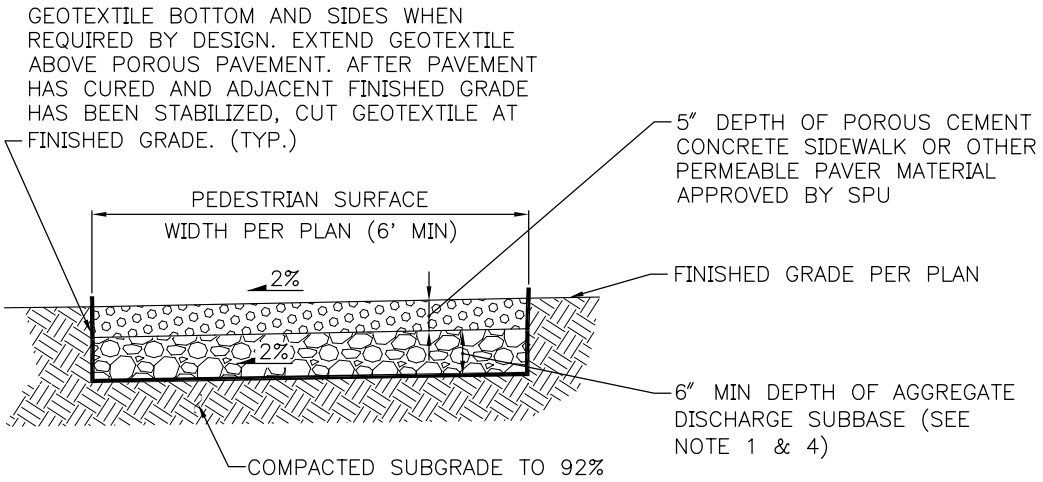

SECTION A – PERMEABLE PAVEMENT SECTION

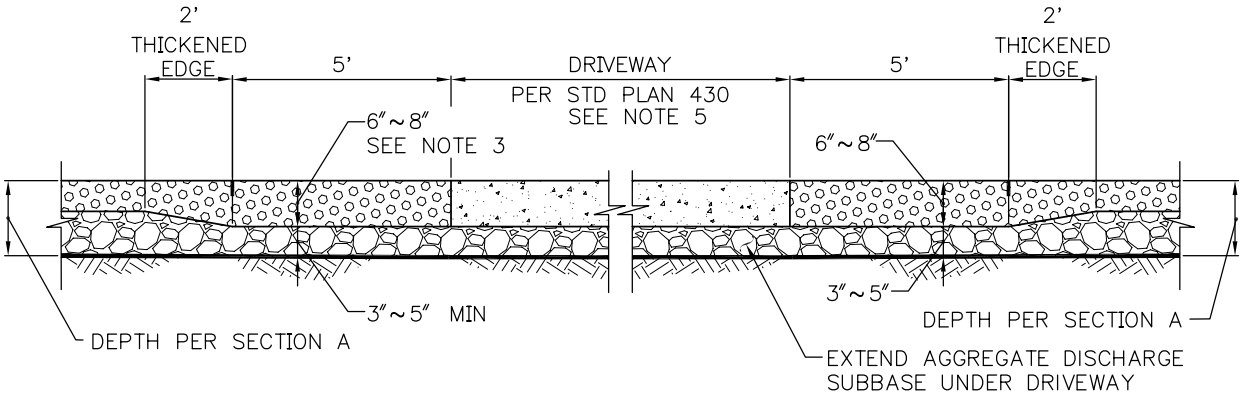

SECTION B – SIDEWALK DEPTH TRANSITION AT DRIVEWAYS

APPLICATION OF THESE DETAILS REQUIRE APPROVAL FROM SDOT AND SPU.

SEATTLE RIGHT-OF-WAY manual

PERMEABLE PAVEMENT SIDEWALK

JANURARY 2010

FIGURE

6–23

P:\Utility\C333206_Std_Details\Plot Files\23 C333206_P23.dwg
BeckC Apr–27–10 2:45pm Xrefs: | TitleBlock–letter | Porous_Conc_Walk |

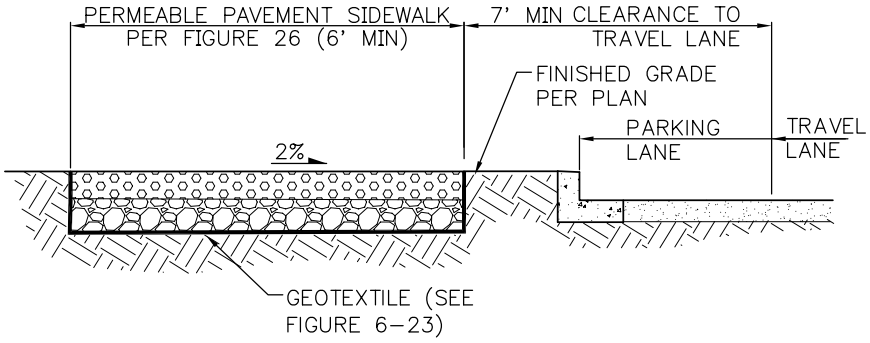

PERMEABLE PAVEMENT SIDEWALK ADJACENT TO CURB

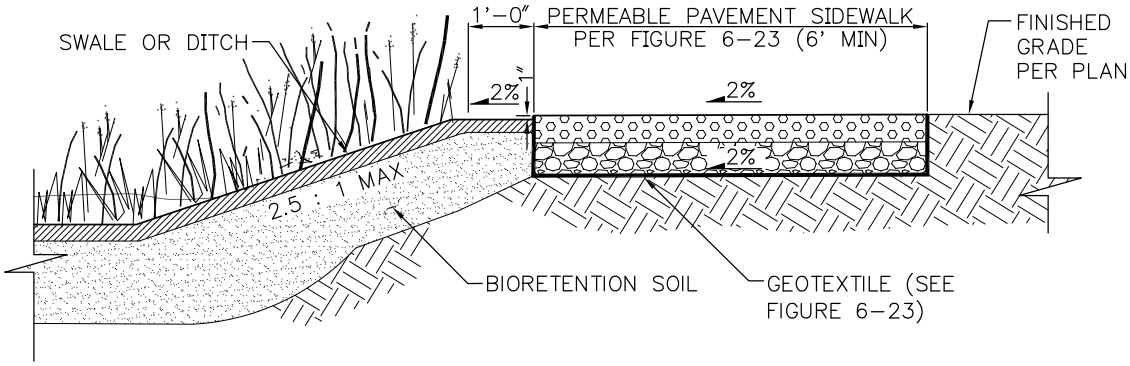

PERMEABLE PAVEMENT SIDEWALK ADJACENT TO SWALE OR DITCH

NOTE: PERMEABLE PAVEMENT FACILITIES ARE FOR LONGITUDINAL SLOPE OF 0 ~ 5% ONLY. TO MAXIMIZE THE PONDING CAPACITY USE OF CHECK DAM OR OTHER METHOD ARE RECOMMENDED. (SEE FIGURE 6-25 FOR DETAIL).

APPLICATION OF THESE DETAILS REQUIRE APPROVAL FROM SDOT AND SPU.

SEATTLE RIGHT-OF-WAY manual

PERMEABLE PAVEMENT FACILITY ,SIDEWALK

JANURARY 2010

FIGURE

6-24

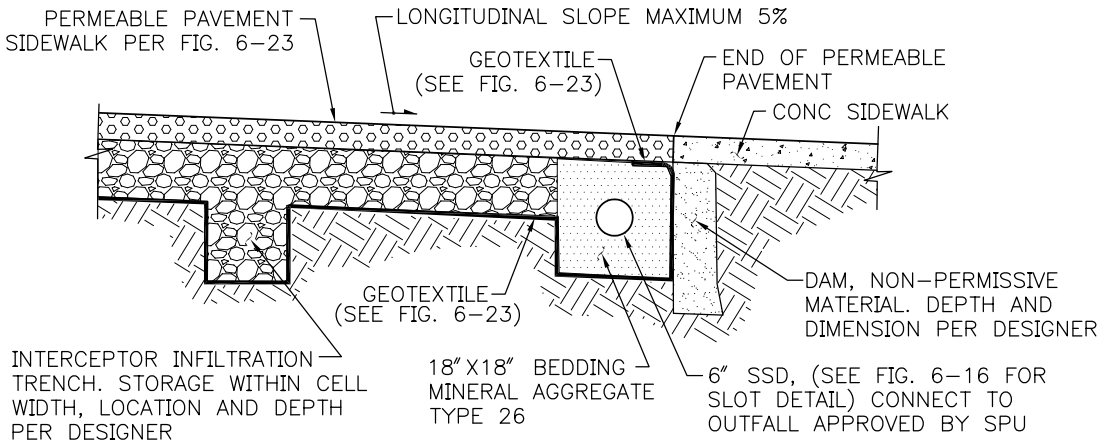

INTERCEPTOR INFILTRATION TRENCH

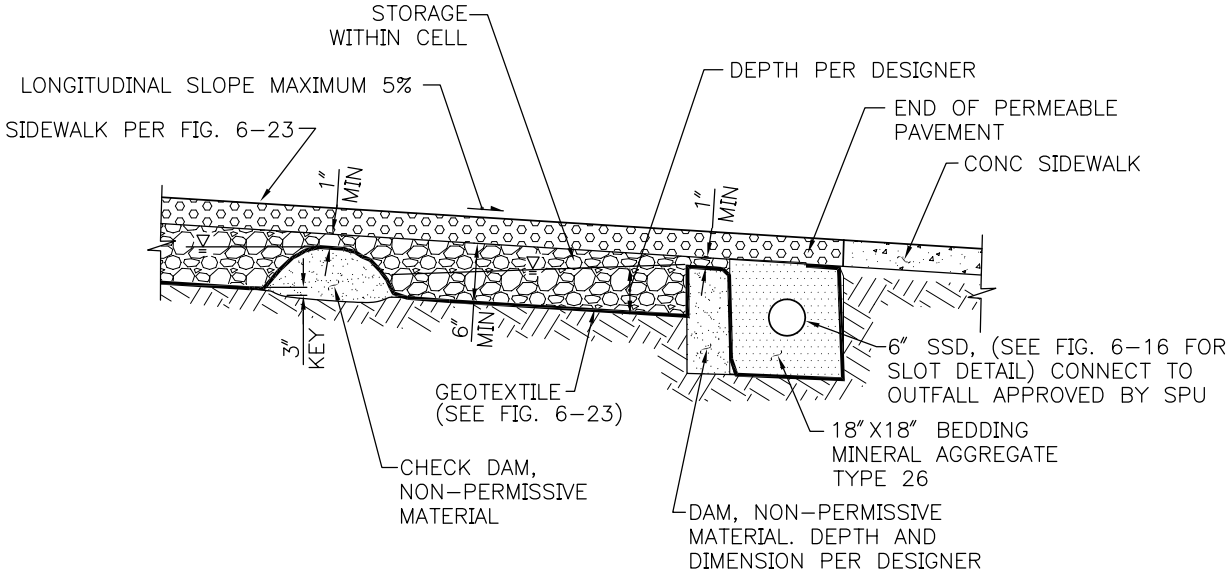

CHECK DAM

APPLICATION OF THESE DETAILS REQUIRE APPROVAL FROM SDOT AND SPU.

SEATTLE RIGHT-OF-WAY manual

PERMEABLE PAVEMENT FACILITY, SIDEWALK CHECK DAM, INTERCEPTER

JANURARY 2010

FIGURE

6–25

P:\Utility\C333206_Std_Details\Plot Files\25 C333206_P25.dwg
BeckC Apr–27–10 2:48pm Xrefs: | TitleBlock–letter | Porous_Conc_Walk–2 |

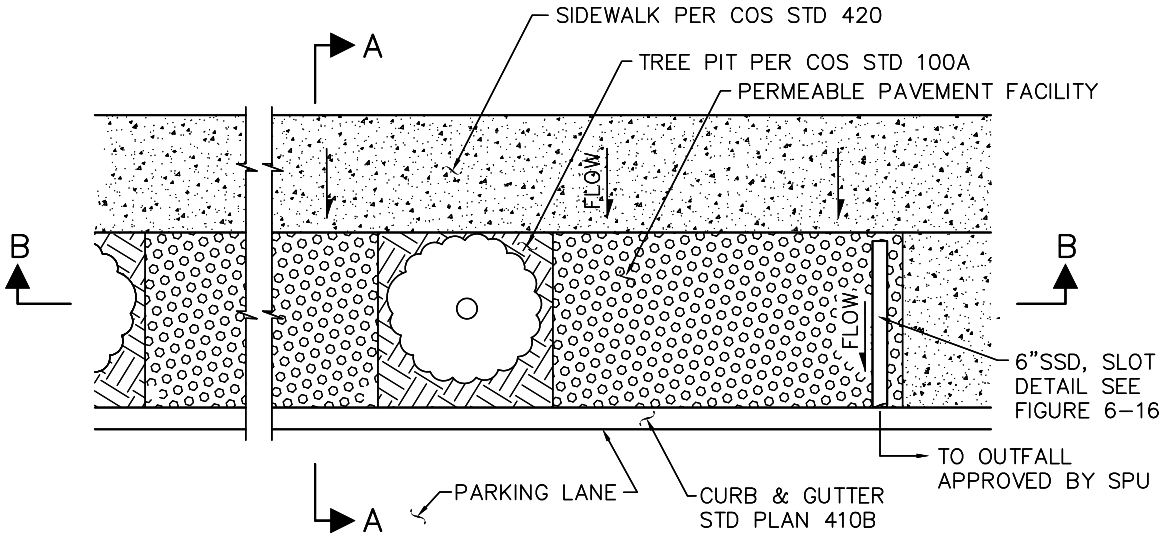

PLAN

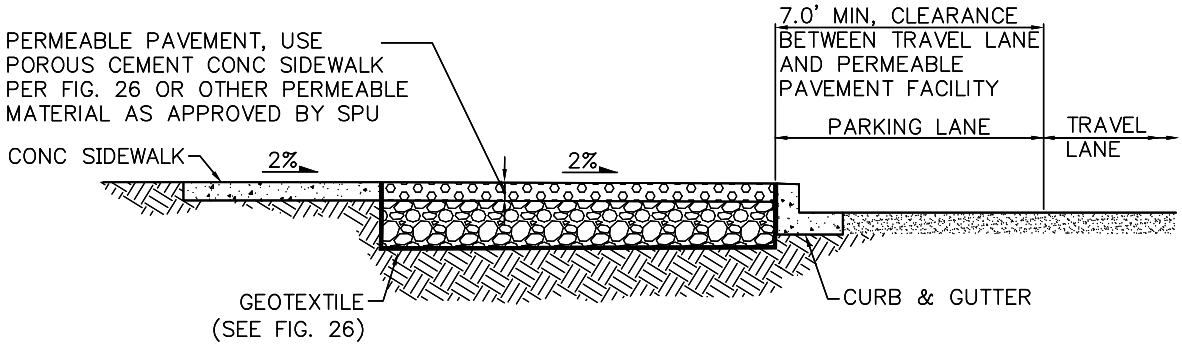

SECTION A–A

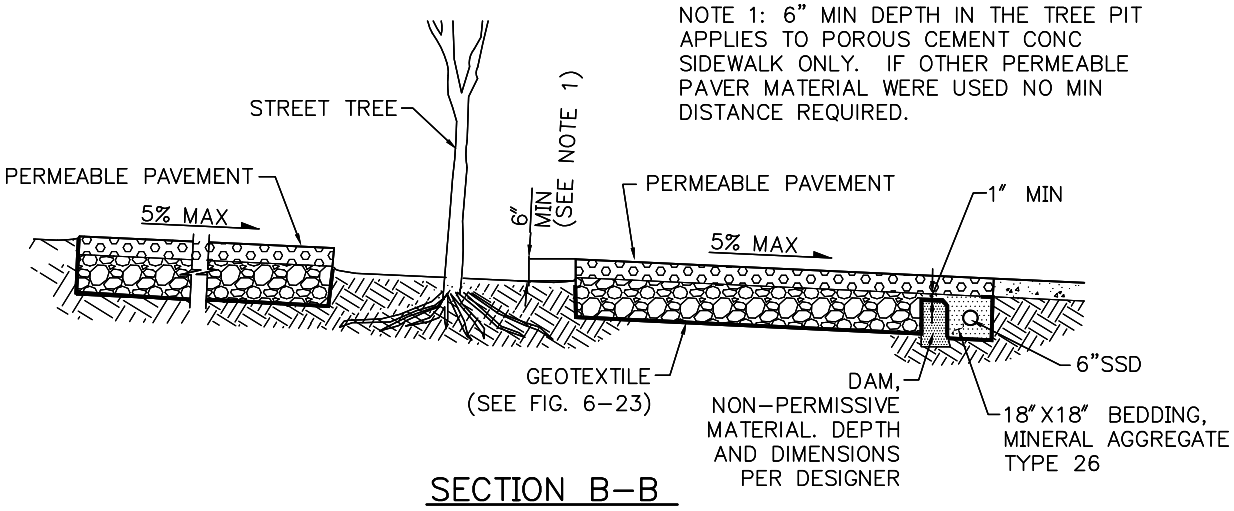

SECTION B–B

APPLICATION OF THESE DETAILS REQUIRE APPROVAL FROM SDOT AND SPU.

SEATTLE RIGHT-OF-WAY manual

PERMEABLE PAVEMENT FACILITY IN PLANTING STRIP

JANURARY 2010

FIGURE

6–26