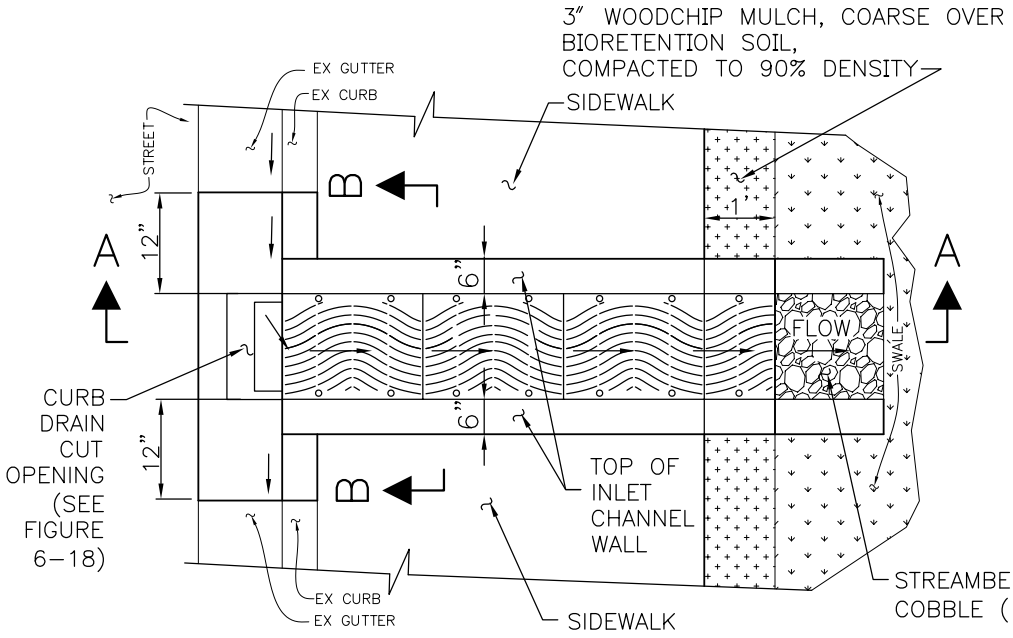

PLAN
NTS

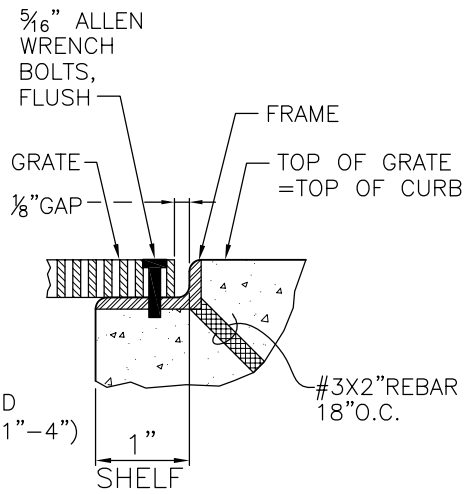

GRATING & FRAME (1 / 6-19)
NTS

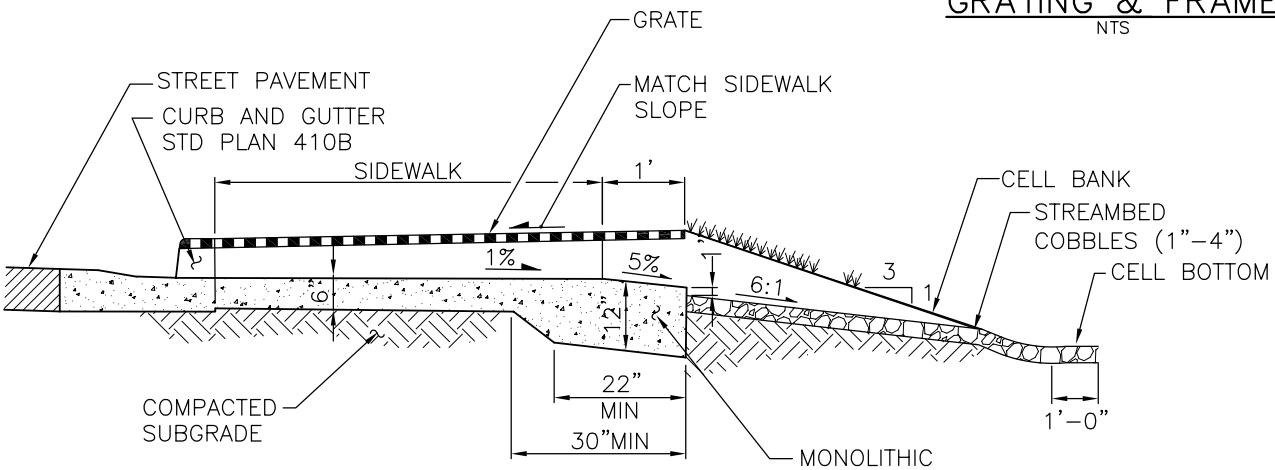

SECTION A-A
NTS

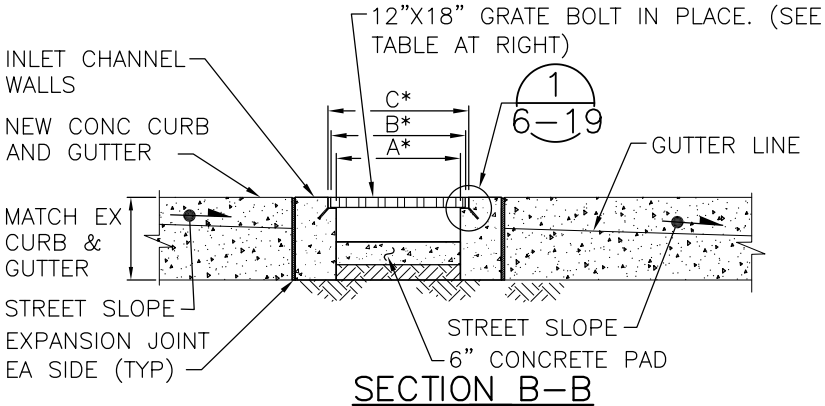

SECTION B-B
NTS

*TRENCH GRATING

A* TRENCH WIDTH	B* GRATE WIDTH	C* FRAME WIDTH
10"	11 7/8"	12 1/8"
16"	17 7/8"	18 1/8"

NOTE: MAXIMUM GRATE HOLE WIDTH (OPEN) 1/4".GRATE SIZE 12"X18" OR 18"X24". CAST IRON URBAN ACCESSORIES TRENCH GRATE AND FRAME. TIDAL WAVE MODEL OR EQUAL.

APPLICATION OF THESE DETAILS REQUIRE APPROVAL FROM SDOT AND SPU.

SEATTLE RIGHT-OF-WAY manual

CONCRETE INLET, CHANNEL & GRATE

JANUARY 2010

FIGURE 6-19

P:\Utility\c333206_std_details\plot files\19 C333206_P19.dwg
HwangC Feb-07-11 10:05am Xrefs: | TitleBlock-letter | ConcInlet_Channel_Grate |