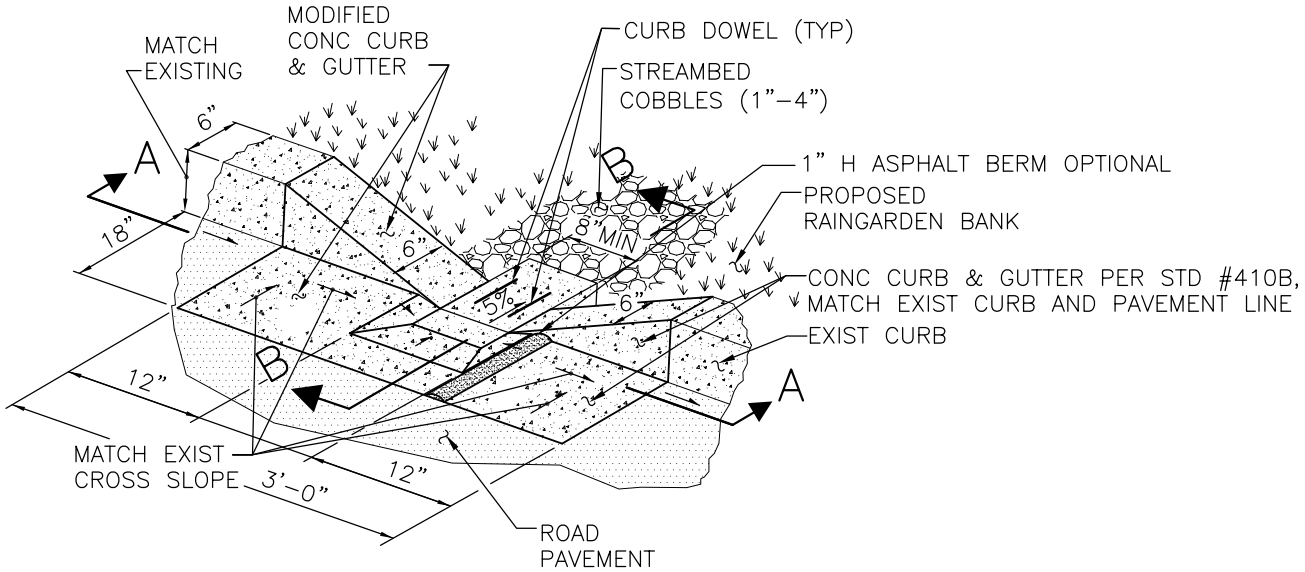

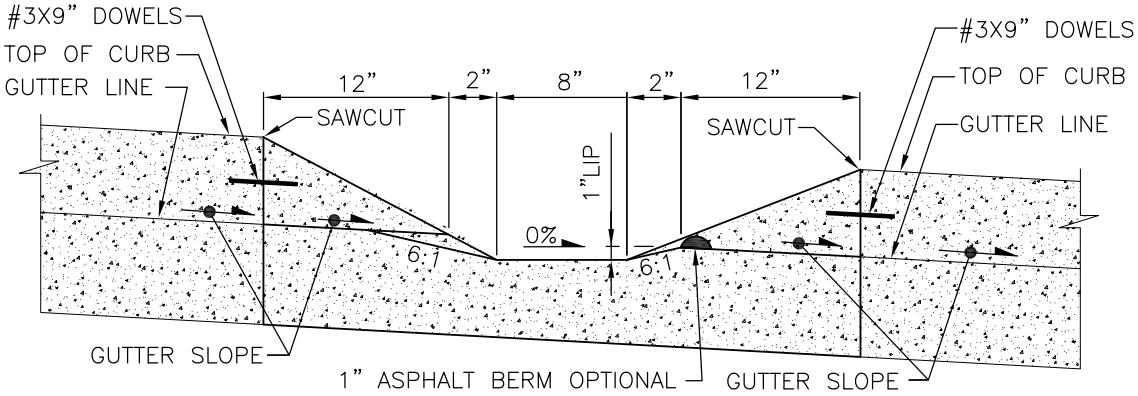

SECTION A–A

SCALE: NTS

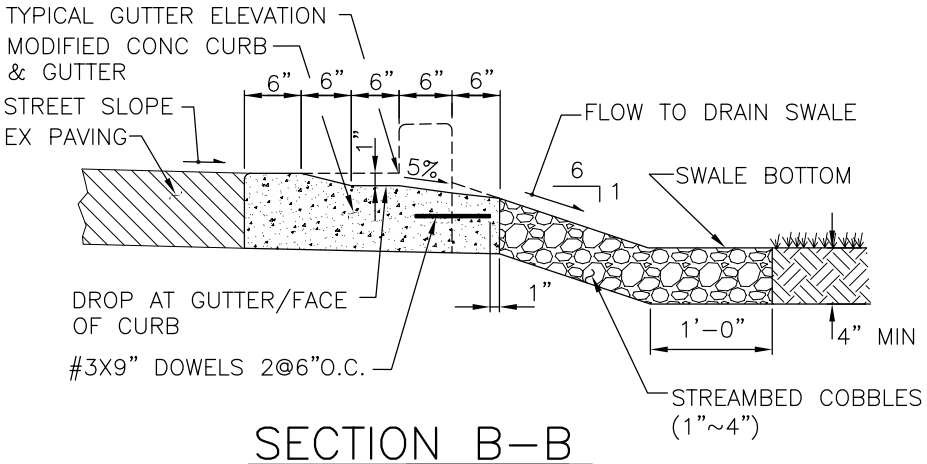

SECTION B–B

SCALE: NTS

APPLICATION OF THESE DETAILS REQUIRE APPROVAL FROM SDOT AND SPU.

SEATTLE RIGHT-OF-WAY manual

CURB DRAIN CUT OPENING FOR SWALE

JANUARY 2010

FIGURE

6–18