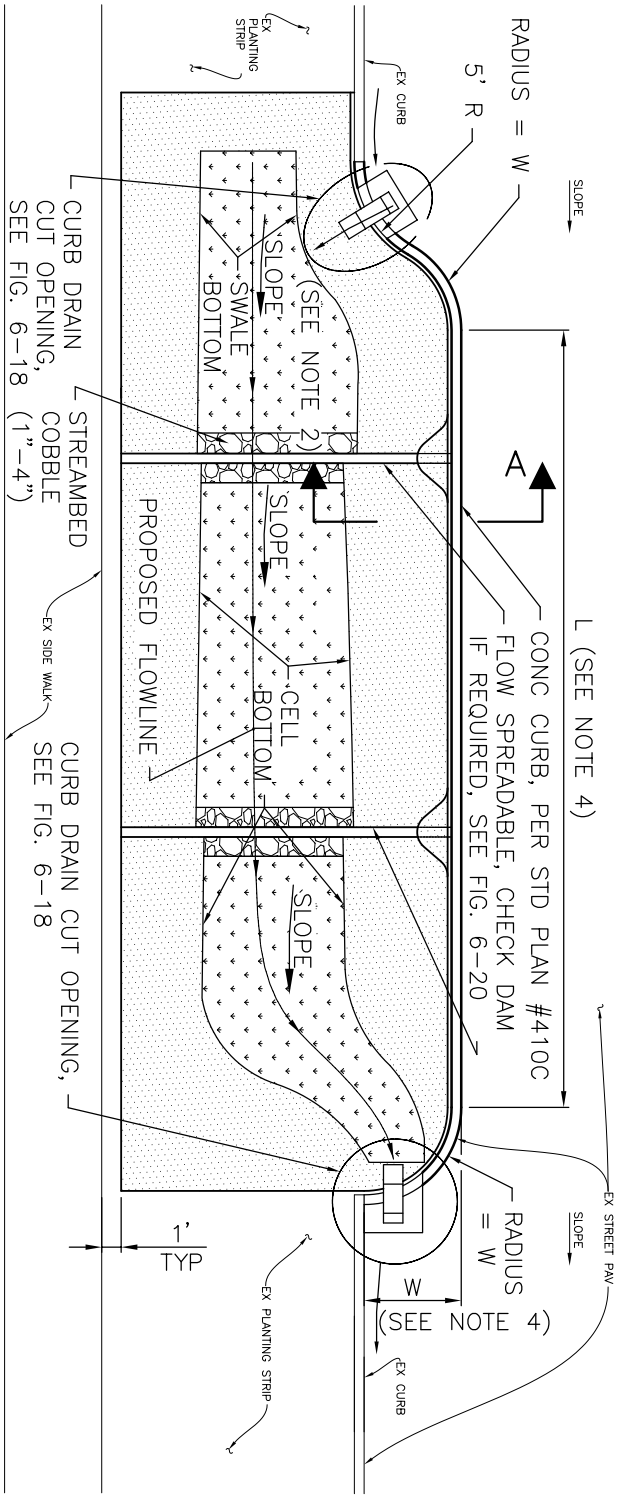

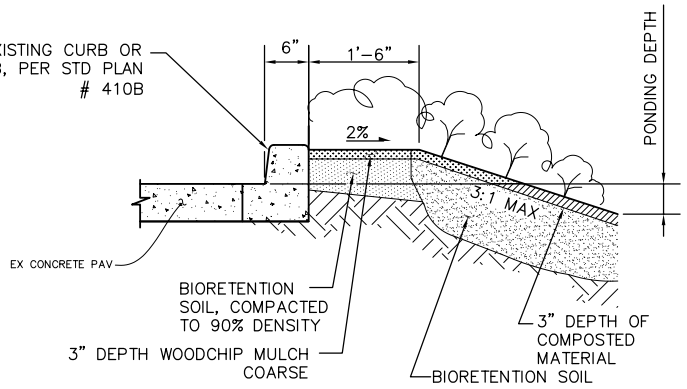

SECTION A–A
NTS
(ADJACENT TO PARKING ZONE)

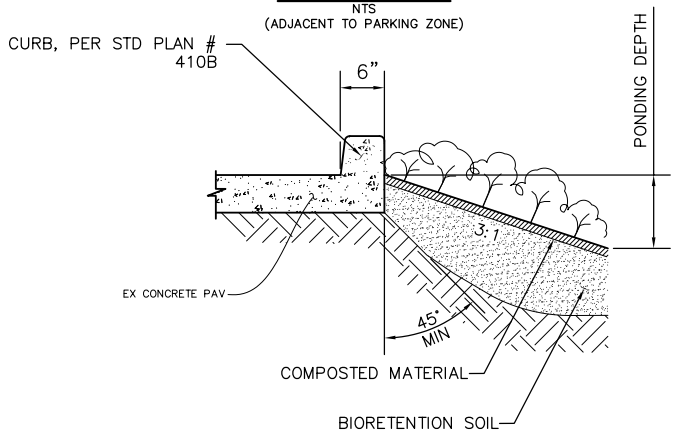

SECTION A–A
NTS
(ADJACENT TO NON–PARKING ZONE)

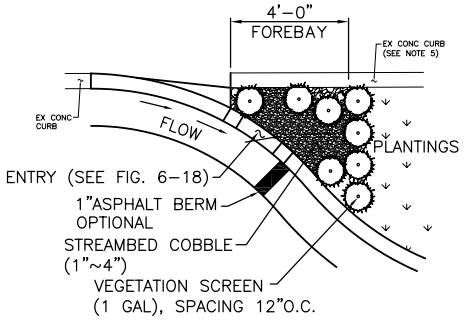

FORBAY DETAIL

NOTES:

1. SUITABLE FOR STREET LONGITUDINAL SLOPE OF LESS THAN 6%.
2. PLANTER BOTTOM SLOPE: 0% FOR BIORETENTION, 1.5% FOR BIOFILTRATION OR DETERMINED BY ENGINEER.
3. SIDEWALK ELEVATION MUST BE SET ABOVE INLET AND OUTLET ELEVATIONS TO ALLOW OVERFLOW TO DRAIN TO STREET.
4. LENGTH (L) AND WIDTH (W) DETERMINED BY ENGINEER.
5. WHERE FEASIBLE WIDTH OF STORMWATER FACILITY MAY EXTEND INTO EXISTING PLANTING STRIP, IN WHICH CASE, EXISTING CURB WOULD BE REMOVED.

APPLICATION OF THESE DETAILS REQUIRE APPROVAL FROM SDOT AND SPU.

SEATTLE RIGHT-OF-WAY manual

CURB EXTENSION

FIGURE 6–21

JANUARY 2010

P:\Utility\c333206_std_details\plot files\21 C333206_P21.dwg
HwangC Feb–07–11 10:06am Xrefs: | TitleBlock–letter | Curb_Extension |

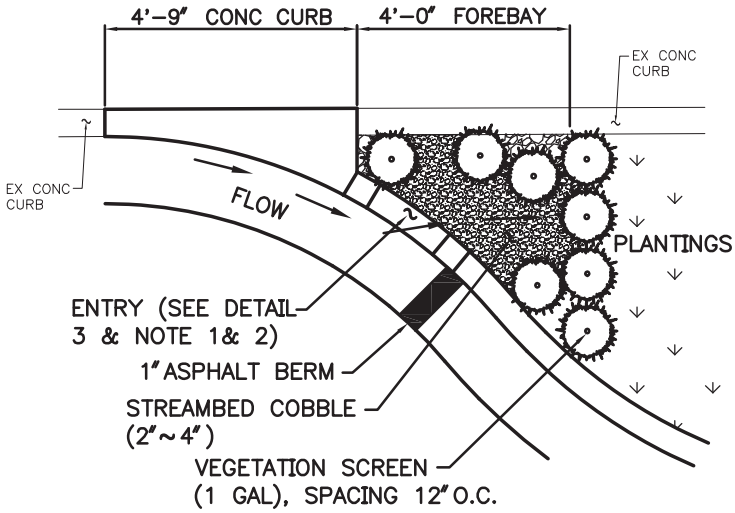

PEA GRAVEL FOREBAY 1 / 6–21A
NTS

NOTES:

1. STREAMBED COBBLE FOREBAY FOR USE WITH STORMWATER CURB EXTENSIONS ONLY.
2. TO PREVENT PONDING, POSITION INLET CLOSER TO EXISTING CURB IF THE STREET CROSS–SLOPE IS >2%. ADDITIONAL INLETS CAN BE ADDED IF NECESSARY (PREFERABLY IMMEDIATELY DOWNSTREAM OF EACH CHECK DAM TO MINIMIZE POTENTIAL BACKFLOW). ADDITIONAL INLETS ARE NOT RECOMMENDED FOR STREETS SLOPED<1%.

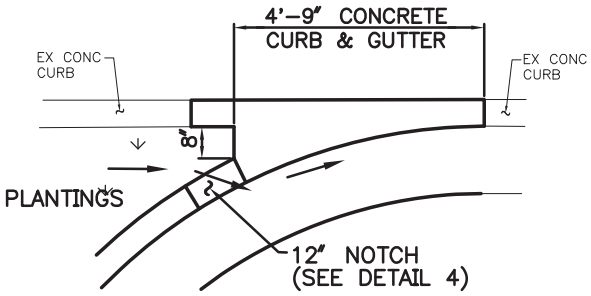

OUTLET CURB 2 / 6–21A
NTS

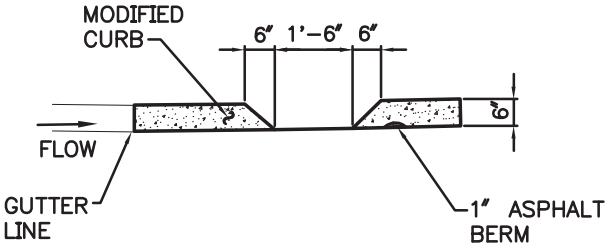

INLET 3 / 6–21A
NTS

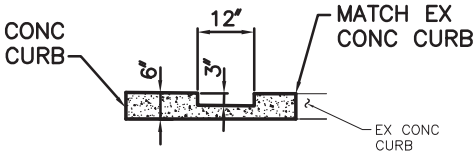

OUTLET 4 / 6–21A
NTS

APPLICATION OF THESE DETAILS REQUIRE APPROVAL FROM SDOT AND SPU.

SEATTLE RIGHT-OF-WAY manual

NATURAL DRAINAGE SYSTEM DETAIL

CURB EXTENSION INLET / OUTLET DETAILS

JULY 2008

FIGURE

6–21A

P:\Utility\C333206_Std_Details\Plot Files\21A C333206_P21A.dwg

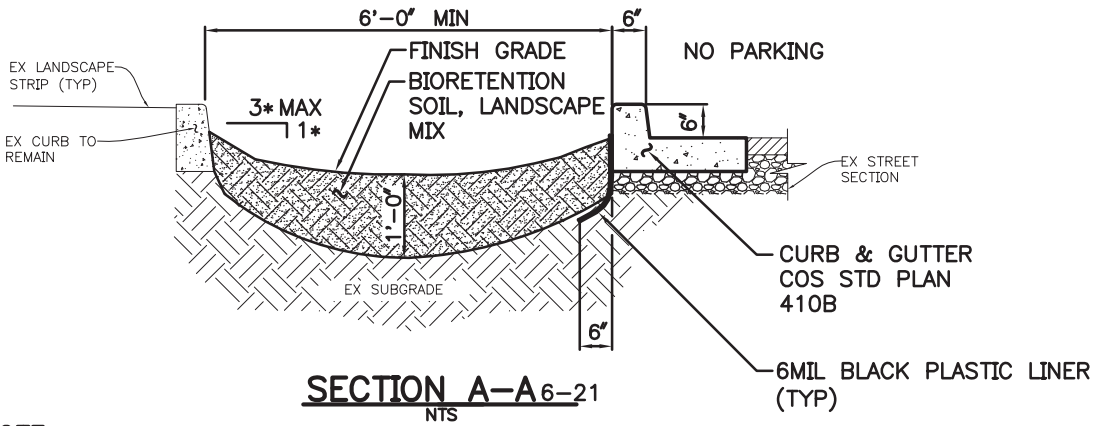

SECTION A–A 6–21
NTS

NOTE:

* IF STORMWATER CURB EXTENSION IS CONSTRUCTED NEXT TO AN EXISTING SIDEWALK, SOIL ELEVATION MUST BE BROUGHT TO TOP OF CURB AND SLOPE AWAY FROM CURB AT A 4:1 MAX SLOPE.

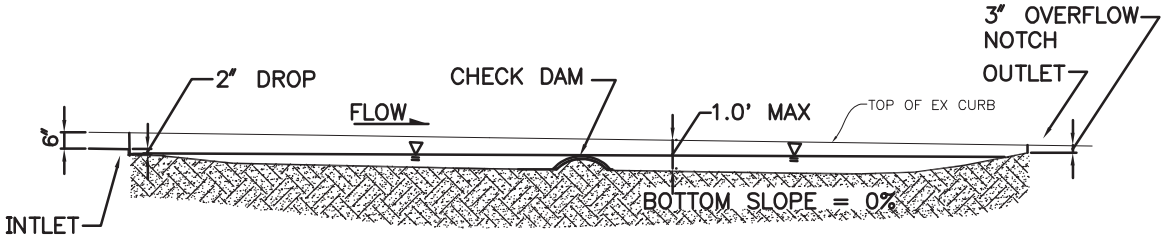

SECTION B–B 6–21
NTS

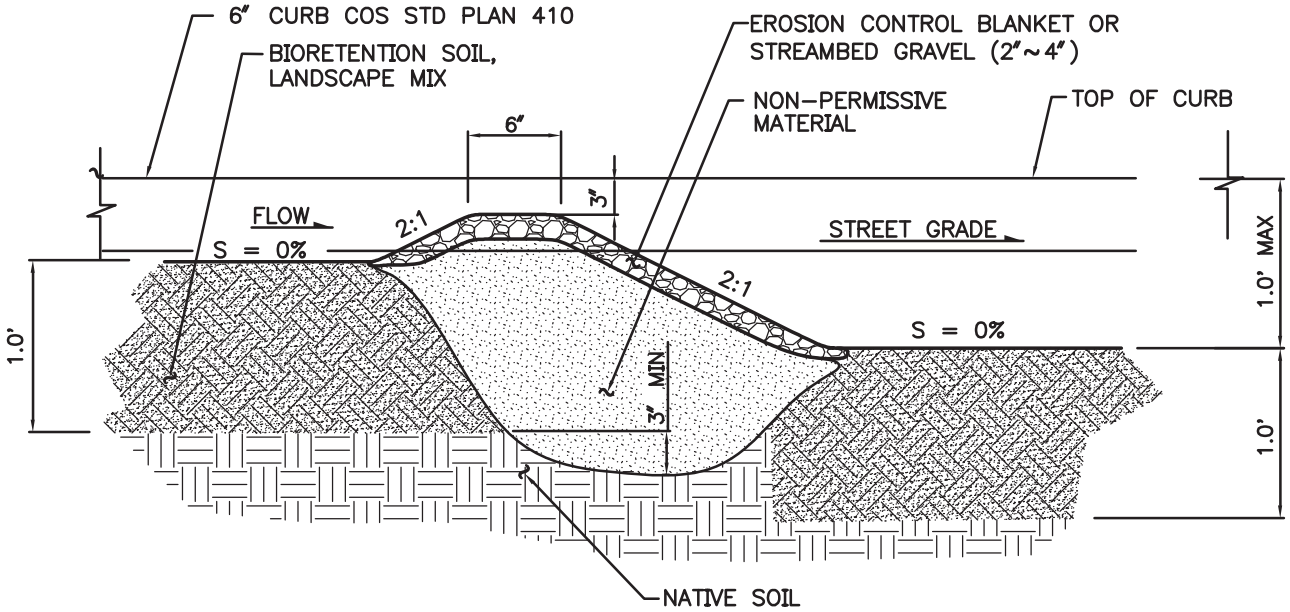

CHECK DAM DETAIL
NTS

APPLICATION OF THESE DETAILS REQUIRE APPROVAL FROM SDOT AND SPU.

SEATTLE RIGHT-OF-WAY manual

NATURAL DRAINAGE SYSTEM DETAIL

CURB EXTENSION SECTIONS

JULY 2008

FIGURE

6–21B

P:\Utility\C333206_Std_Details\Plot Files\21B C333206_P21B.dwg