Vertical Survey Control Point Table				
Point #	Northing	Easting	Elevation	Description
101	212150.51	1275637.36	296.26	BC
102	211987.18	1275332.51	283.15	RC

Horizontal Survey Control Point Table			
Point #	Northing	Easting	Description
21	212125.43	1275578.58	MIC 38435002
22	212130.72	1275306.54	MIC 38435003
23	210430.46	1274735.89	MIC 38435101
24	210426.49	1275038.04	MIC 38435102
25	211066.47	1275055.96	MIC 38435103
26	212026.53	1275083.07	MIC 38435104
103	211439.54	1275273.07	RC 38463803
104	210943.12	1275236.02	RC 38463804
105	210438.56	1275236.24	MAG 38463805

HORIZONTAL DATUM: NAD83–2011 EPOCH 2010.00 DERIVED FROM THE WSRN–CORS

VERTICAL DATUM: NAVD88

BASIS OF BEARING: WASHINGTON STATE PLANE COORDINATE SYSTEM, NORTH ZONE

VERTICAL BENCHMARKS: SNV–2601, CP #101

PROJECT FIELD BOOK: #3846 PGS 35–41

PROJECT SCALE FACTOR: 0.999987347

CONVERGENCE ANGLE: –1°06'01.00688"

PROJECT COMBINED GRID FACTOR: 0.999976871

SCALE FACTOR BASIS: NORTHING: 212150 EASTING: 1275637

SURVEY PROJECT FOLDER NUMBER: 261–827

VIRTUAL VAULT PLAN NUMBER: 265–102

DATE: 1–21–2014

PROJECT NUMBER: NS13212 G15

PROJECT NAME: SAFE ROUTES TO SCHOOL – 16TH AVE S

SURVEY PROJECT FOLDER NUMBER: 261–827

RESEARCH FIELD BOOKS:

REFERENCE DOCUMENTS: 265–102

DATE: 1–21–2014

PRJ. SURVEYOR: M. KIMBOROWICZ

PRIMARY CREW: J. EVANS, J. HATCH

OFFICE TECH: J. GRAHAM

R/W CREATED BY: M. KIMBOROWICZ

GEOREGISTRATION NOTES: NW 16–24–4, SW 16–24–4, NE 17–24–4, SE 17–24–4

COMMENTS:

NOTES:
FIELD MEASUREMENTS FOR THIS SURVEY PERFORMED WITH A 1" LEICA TOTAL STATION USING TRAVERSE METHODS THAT MEET OR EXCEED ACCURACY REQUIREMENTS CONTAINED IN WAC 332.130.090.

THIS SURVEY WAS CONDUCTED WITHOUT THE BENEFIT OF A CURRENT TITLE REPORT AND THEREFORE DOES NOT PURPORT TO SHOW ALL EASEMENTS OR RESTRICTIONS OF RECORD, IN ANY.

SNV–2601: FND BRASS CAP 0.5' NORTH & 0.5' EAST OF THE INT BK CW IN THE SW COR INT OF BEACON AVE S & S SPOKANE ST, SOUTH OF A CATCH BASIN AT SFD STATION #13 ELEV=309.41'

CP #101: FND 1"DIA BRASS PLUG IN FRONT OF SEAM OF CW 29.7' EAST OF INT BK CW AT NE COR OF S SPOKANE ST & 17TH AVE S ELEV=296.27'

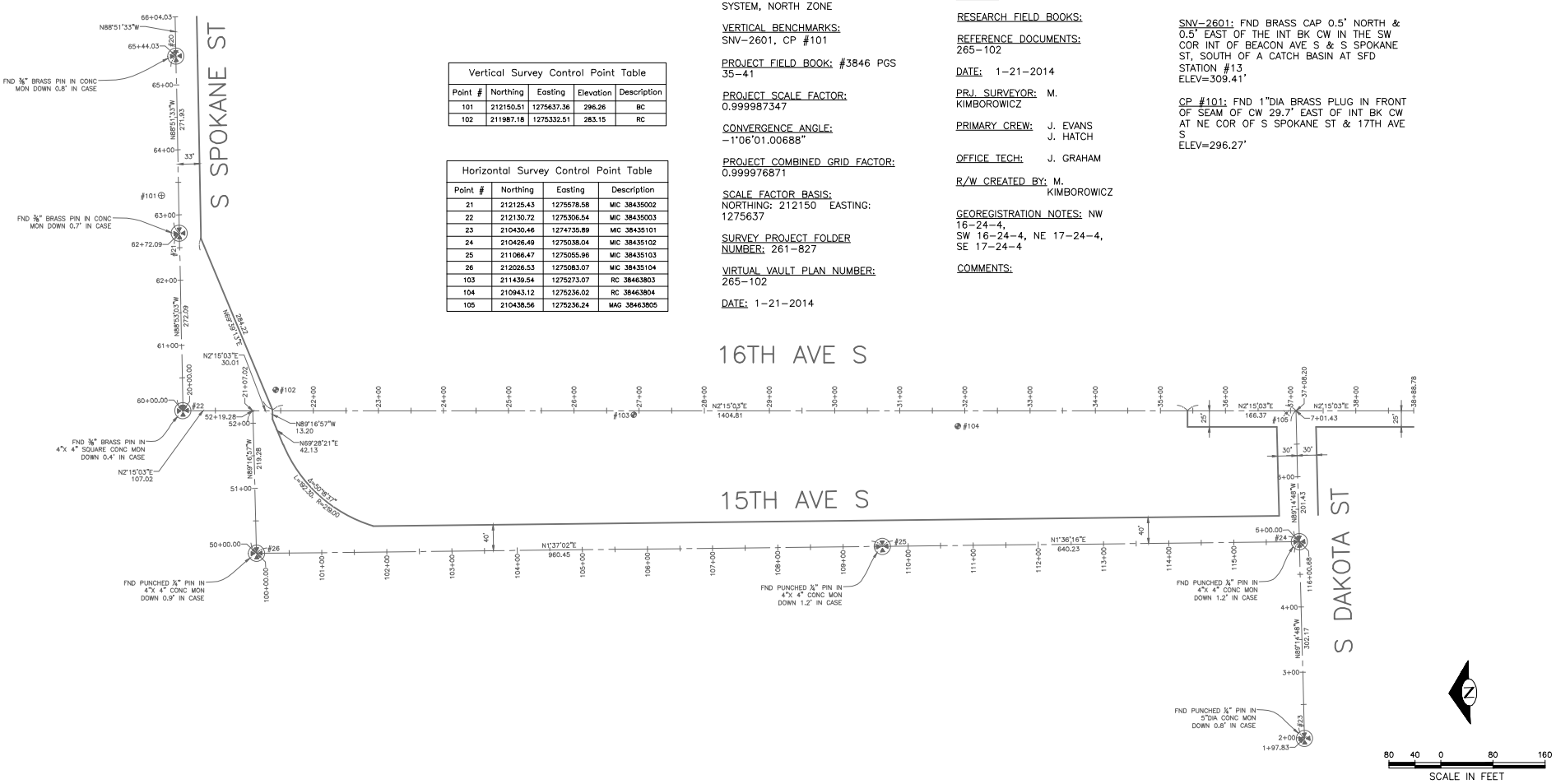

SC1
SURVEY CONTROL
16TH AVE S

60% REVIEW
NOT FOR CONSTRUCTION
OCTOBER 2014

APPROVED FOR ADVERTISING
NANCY LOCKE
DEPARTMENT OF FINANCE & ADMINISTRATIVE SERVICES
SEATLE, WASHINGTON . . . . . 20 . .
BY: . . . . . .
PURCHASING & CONTRACTING SERVICES DIRECTOR

NAME OR INITIALS AND DATE	INITIALS AND DATE
DESIGNED .PT.	REVIEWED: DES. . . . . CONST. . . . .
CHECKED	SDOT . . . . . PROJ. MGR. . . .
DRAWN	RECEIVED . . . . .
CHECKED .PT	REVISED AS BUILT . . . . .

ALL WORK SHALL BE DONE IN ACCORDANCE WITH THE CITY OF SEATTLE STANDARD PLANS AND SPECIFICATIONS AND OTHER DOCUMENTS CALLED FOR IN SECTION 0-02.3 OF THE PROJECT MANUAL.

MARK H. KIMBOROWICZ
STATE OF WASHINGTON
38985
REGISTERED PROFESSIONAL LAND SURVEYOR

City of Seattle
Seattle Department of Transportation
ORDINANCE NO. . . . . APPROVED. . . . . .
FUND: . . . . . .
SCALE: H. 1"=20', V. 1"=10' INSPECTOR'S BOOK . . . . . .

2015 SIDEWALK DEVELOPMENT AND SRTS – PACKAGE 4

JOB NO. PC TS6422A R/W CO TS6422C
VAULT PLAN NO. XXX–YYY
SHEET 3 OF 42

VAULT SERIAL NO.	DATE	MARK	NATURE REVISIONS	MADE	CHK'D	REV'D
ABC0P						

P:\STDrafter\2015 Sidewalks SRTS Program\Trfnn-CPRS\16TH AVE S\A_PLOT FILES\TS6003A-P-CTRL PLAN_16TH AVE S.dwg
Oct-23-14 11:52am

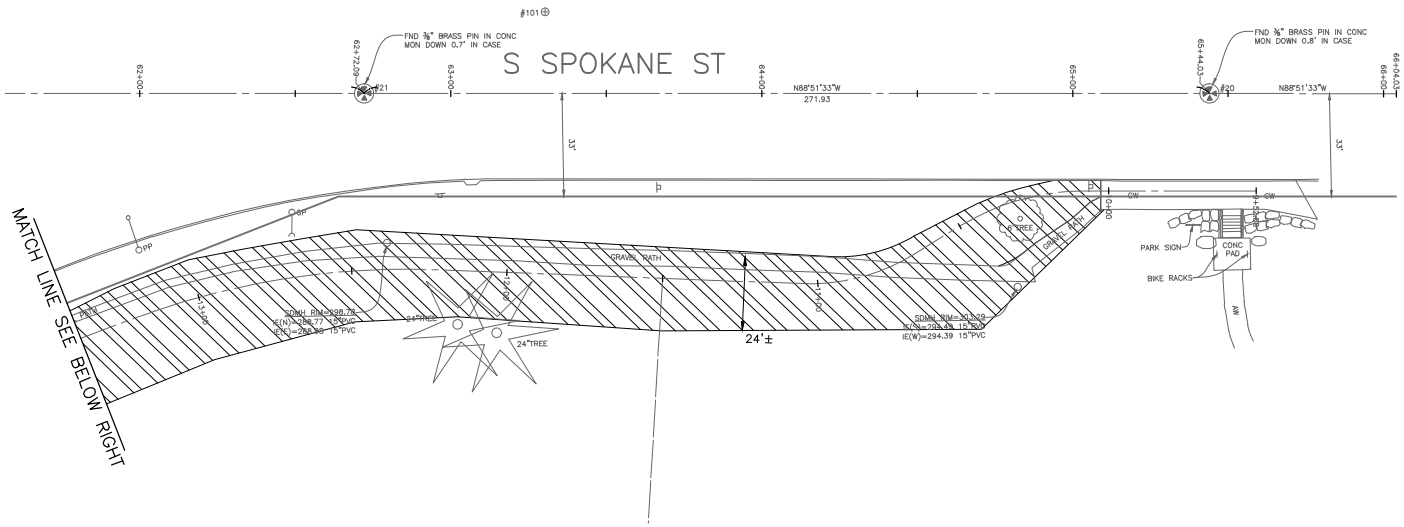

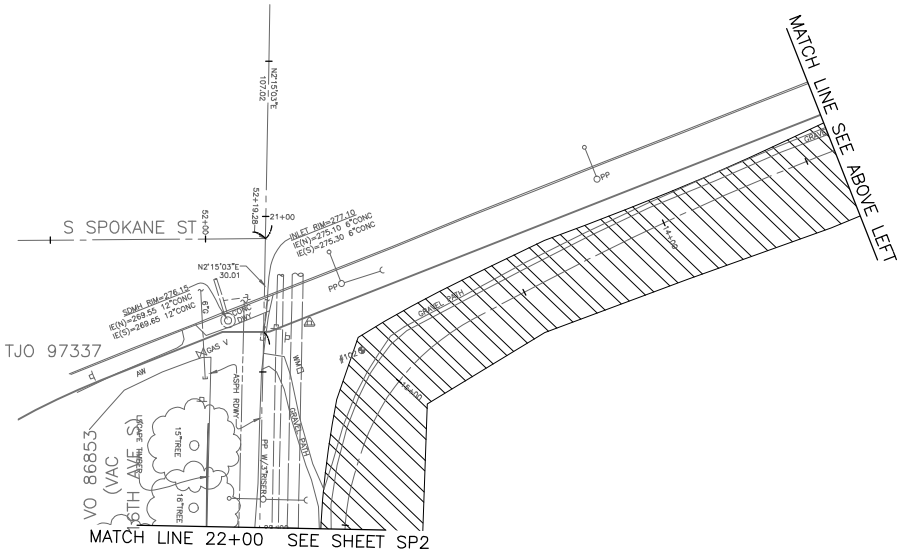

LEGEND:

- REMOVE PAVEMENT
- REMOVE ASPHALT PAVEMENT
- REMOVE SIDEWALK
- CLEAR AND GRUB, AND COMMON EX.
- SAWCUT

N

20 10 0 20 40

SCALE IN FEET

SP1

SITE PREPARATION PLAN

16TH AVE S

CALL 2 WORKING DAYS BEFORE YOU DIG 1-800-424-5555

60% REVIEW
NOT FOR CONSTRUCTION
OCTOBER 2014

APPROVED FOR ADVERTISING
NANCY LOCKE
DEPARTMENT OF FINANCE & ADMINISTRATIVE SERVICES
SEATTLE, WASHINGTON . . . . . 20 . .
BY:
PURCHASING & CONTRACTING SERVICES DIRECTOR

NAME OR INITIALS AND DATE
DESIGNED PT. . . . . .
CHECKED . . . . . .
DRAWN . . . . . .
CHECKED . . . . . .

INITIALS AND DATE
REVIEWED:
DES. . . . . CONST. . . . . .
SDOT . . . . . PROJ. MGR. . . . . .
RECEIVED . . . . . .
REVISED AS BUILT . . . . . .

ALL WORK SHALL BE DONE IN ACCORDANCE WITH THE CITY OF SEATTLE STANDARD PLANS AND SPECIFICATIONS AND OTHER DOCUMENTS CALLED FOR IN SECTION 0-02.3 OF THE PROJECT MANUAL.

STATE OF WASHINGTON 51781 REGISTERED PROFESSIONAL ENGINEER

City of Seattle
Seattle Department of Transportation
ORDINANCE NO. . . . . APPROVED. . . . . .
FUND: . . . . . .
SCALE: H. 1"=20', V. 1"=10' INSPECTOR'S BOOK . . . . . .

2015 SIDEWALK DEVELOPMENT AND SRTS – PACKAGE 4

JOB NO. PC TS6422A
R/W
CO TS6422C
VAULT PLAN NO. XXX-YYY
SHEET 4 OF 42

VAULT SERIAL NO.	DATE	MARK	NATURE REVISIONS	MADE	CHK'D	REV'D
ABCDF						

P:\STDrafter\2015 Sidewalks SRTS Program\Trinh-CPRS\16TH AVE S\A_PLOT FILES\TS5003A-P-SITE-16TH AVE S.dwg
Oct-23-14 1:51pm

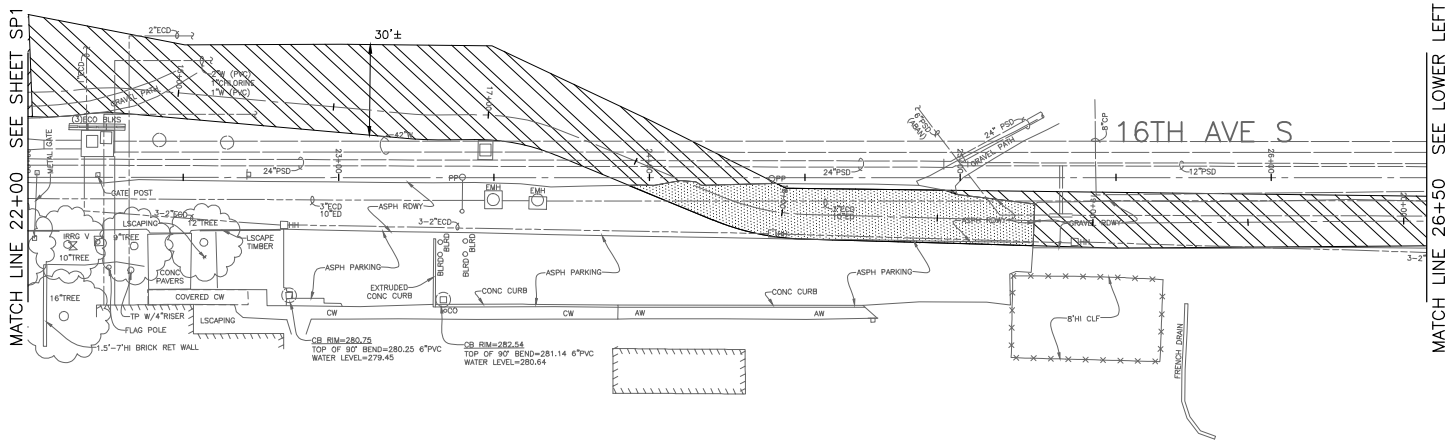

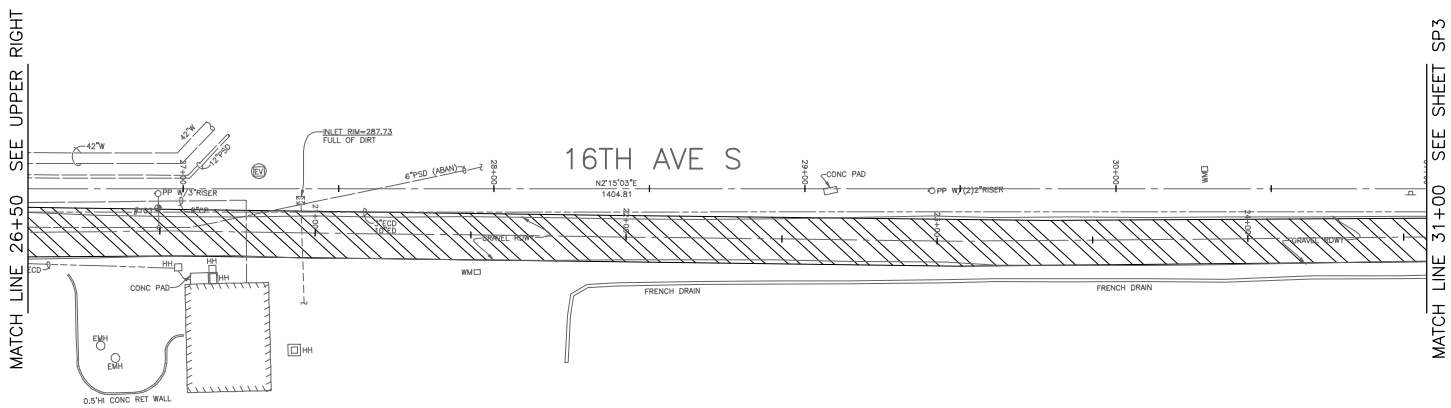

LEGEND:

- REMOVE PAVEMENT
- REMOVE ASPHALT PAVEMENT
- REMOVE SIDEWALK
- CLEAR AND GRUB, AND COMMON EX.
- SAWCUT

N

20 10 0 20 40
SCALE IN FEET

SP2
SITE PREPARATION PLAN
16TH AVE S

CALL 2 WORKING DAYS BEFORE YOU DIG 1-800-424-5555

60% REVIEW
NOT FOR CONSTRUCTION
OCTOBER 2014

APPROVED FOR ADVERTISING
NANCY LOCKE
DEPARTMENT OF FINANCE & ADMINISTRATIVE SERVICES
SEATTLE, WASHINGTON . . . . . 20 . .
BY:
PURCHASING & CONTRACTING SERVICES DIRECTOR

NAME OR INITIALS AND DATE
DESIGNED PT. . . . . .
CHECKED . . . . . .
DRAWN . . . . . .
CHECKED . . . . . .

INITIALS AND DATE
REVIEWED:
DES. . . . . CONST. . . . . .
SDOT . . . . . PROJ. MGR. . . . . .
RECEIVED . . . . . .
REVISED AS BUILT . . . . . .

ALL WORK SHALL BE DONE IN ACCORDANCE WITH THE CITY OF SEATTLE STANDARD PLANS AND SPECIFICATIONS AND OTHER DOCUMENTS CALLED FOR IN SECTION 0-02.3 OF THE PROJECT MANUAL.

STATE OF WASHINGTON 51781 REGISTERED PROFESSIONAL ENGINEER

City of Seattle
Seattle Department of Transportation
ORDINANCE NO. . . . . APPROVED. . . . . .
FUND: . . . . . .
SCALE: H. 1"=20', V. 1"=10' INSPECTOR'S BOOK . . . . . .

2015 SIDEWALK DEVELOPMENT AND SRTS – PACKAGE 4

JOB NO. PC TS6422A
R/W
CO TS6422C
VAULT PLAN NO. XXX-YYY
SHEET 5 OF 42

VAULT SERIAL NO.	DATE	MARK	NATURE REVISIONS	MADE	CHK'D	REV'D
ABCDF						

P:\STDrafter\2015 Sidewalks SRTS Program\Trinh-CPRS\16TH AVE S\A_PLOT FILES\TS5003A-P-SITE-16TH AVE S.dwg
Oct-23-14 1:51pm

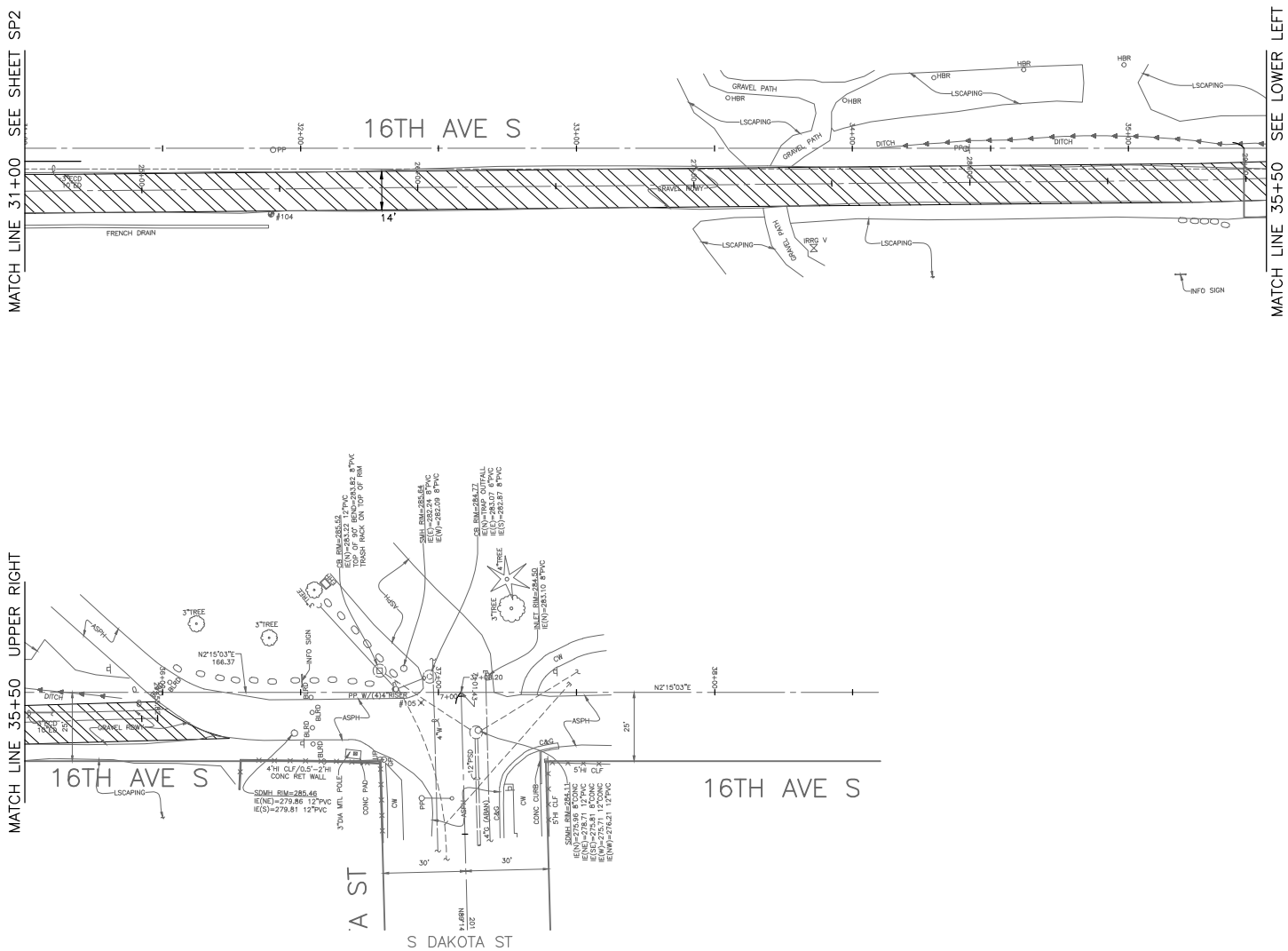

LEGEND:

- REMOVE PAVEMENT
- REMOVE ASPHALT PAVEMENT
- REMOVE SIDEWALK
- CLEAR AND GRUB, AND COMMON EX.
- SAWCUT

20 10 0 20 40
SCALE IN FEET

SP3
SITE PREPARATION PLAN
16TH AVE S

VAULT SERIAL NO.	DATE	MARK	NATURE REVISIONS	MADE	CHK'D	REV'D
ABCDF						

P:\STDrafter\2015 Sidewalks SRTS Program\Tinh-CPRS\16TH AVE S\A_PLOT FILES\TS5003A-P-SITE-16TH AVE S.dwg
Oct-23-14 1:51pm

CALL 2 WORKING DAYS
BEFORE YOU DIG
1-800-424-5555

60% REVIEW
NOT FOR CONSTRUCTION
OCTOBER 2014

APPROVED FOR ADVERTISING
NANCY LOCKE
DEPARTMENT OF FINANCE & ADMINISTRATIVE SERVICES
SEATTLE, WASHINGTON . . . . . 20 . .
BY:
PURCHASING & CONTRACTING SERVICES DIRECTOR

NAME OR INITIALS AND DATE
DESIGNED PT. . . . . .
CHECKED . . . . . .
DRAWN . . . . . .
CHECKED . . . . . .

INITIALS AND DATE
REVIEWED:
DES. . . . . CONST. . . . . .
SDOT . . . . . PROJ. MGR. . . . . .
RECEIVED . . . . . .
REVISED AS BUILT . . . . . .

ALL WORK SHALL BE DONE IN ACCORDANCE WITH THE CITY OF SEATTLE STANDARD PLANS AND SPECIFICATIONS AND OTHER DOCUMENTS CALLED FOR IN SECTION 0-02.3 OF THE PROJECT MANUAL.

STATE OF WASHINGTON 51781 REGISTERED PROFESSIONAL ENGINEER

City of Seattle
Seattle Department of Transportation
ORDINANCE NO. . . . . APPROVED. . . . . .
FUND: . . . . . .
SCALE: H. 1"=20', V. 1"=10' INSPECTOR'S BOOK . . . . . .

2015 SIDEWALK DEVELOPMENT AND SRTS – PACKAGE 4

JOB NO. PC TS6422A
R/W
CO TS6422C
VAULT PLAN NO. XXX-YYY
SHEET 6 OF 42

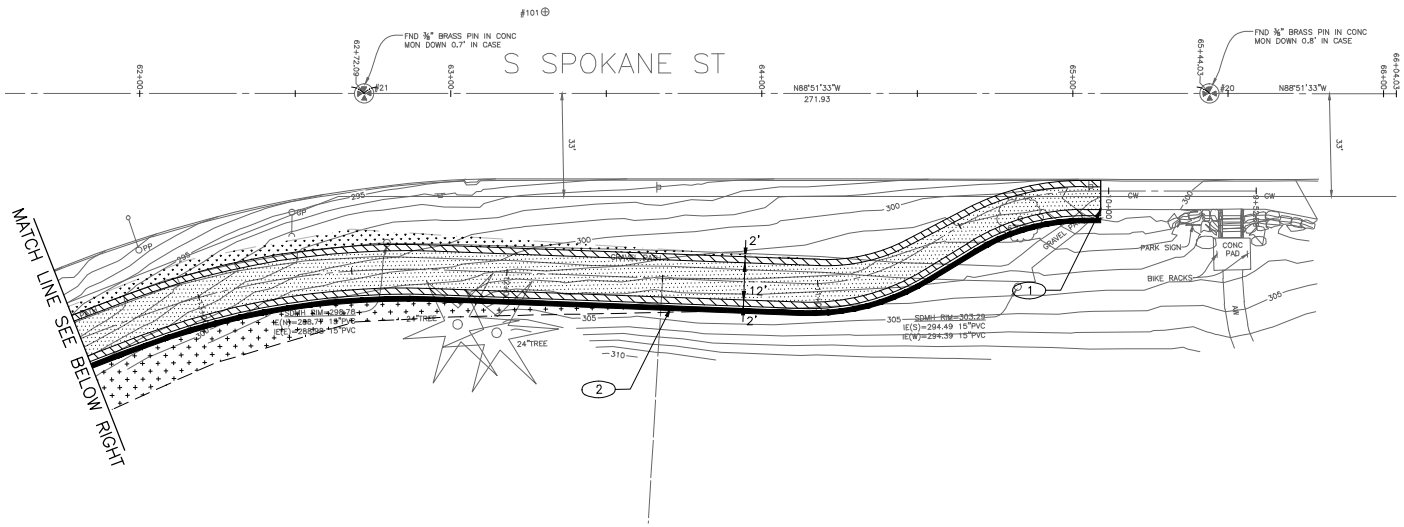

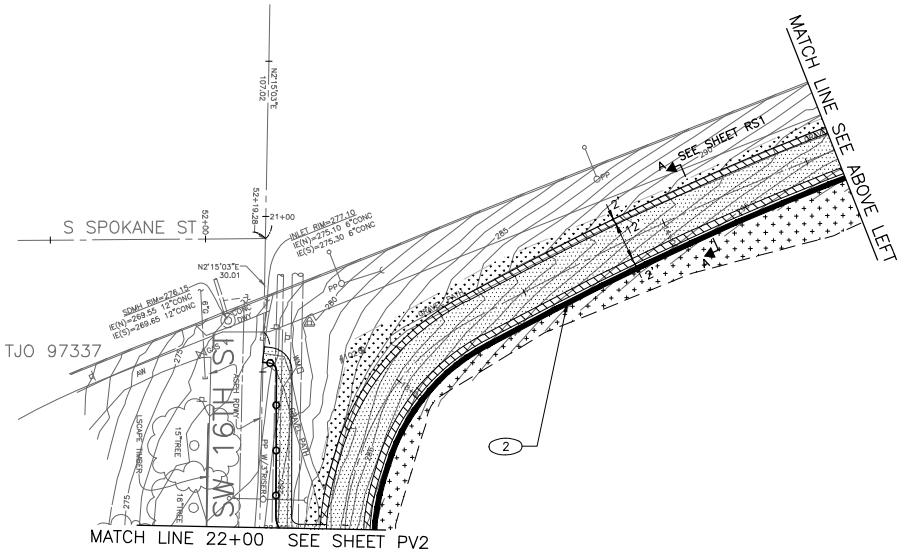

PAVING LEGEND

- PAVEMENT, 3" WMA CL ½" OVER 4" COMPACTED DEPTH MNRL AGG TYPE 2
- 3" MNRL AGG TYPE 1
- TREE AND SHRUB PLANTING PER STD PLAN 100b
- SEEDED GRASS OVER 6" TOPSOIL PER STD PLAN 142
- DETECTABLE WARNING PLATE
- 6" SIDEWALK NON-ROADWAY CEM CONC W/ 25% POZZOLANDS PER STD PLAN 432A
- ROCK FACING PER STD PLAN 141
- VERTICAL PEDESTRIAN RAILING PER STD PLAN 443
- TOE OF FILL
- TOP OF CUT

CONSTRUCTION NOTES

1. MATCH EX SIDEWALK/LANDING
2. INSTALL ROCK FACING PER STD PLAN 141

N

20 10 0 20 40

SCALE IN FEET

PV1

GRADING PAVING AND DRAINAGE PLAN

16TH AVE S

CALL 2 WORKING DAYS BEFORE YOU DIG 1-800-424-5555

60% REVIEW
NOT FOR CONSTRUCTION
OCTOBER 2014

APPROVED FOR ADVERTISING
NANCY LOCKE
DEPARTMENT OF FINANCE & ADMINISTRATIVE SERVICES
SEATTLE, WASHINGTON . . . . . 20 . .
BY:
PURCHASING & CONTRACTING SERVICES DIRECTOR

NAME OR INITIALS AND DATE
DESIGNED PT. . . . . .
CHECKED . . . . . .
DRAWN . . . . . .
CHECKED PT . . . . . .

INITIALS AND DATE
REVIEWED:
DES. . . . . CONST. . . . . .
SDOT . . . . . PROJ. MGR. . . . . .
RECEIVED . . . . . .
REVISED AS BUILT . . . . . .

ALL WORK SHALL BE DONE IN ACCORDANCE WITH THE CITY OF SEATTLE STANDARD PLANS AND SPECIFICATIONS AND OTHER DOCUMENTS CALLED FOR IN SECTION 0-02.3 OF THE PROJECT MANUAL.

STATE OF WASHINGTON 51781 REGISTERED PROFESSIONAL ENGINEER

City of Seattle
Seattle Department of Transportation
ORDINANCE NO. . . . . APPROVED. . . . . .
FUND: . . . . . .
SCALE: H. 1"=20', V. 1"=10' INSPECTOR'S BOOK . . . . . .

2015 SIDEWALK DEVELOPMENT AND SRTS – PACKAGE 4

JOB NO. PC TS6422A
R/W
CO TS6422A
VAULT PLAN NO. XXX-YYY
SHEET 7 OF 42

VAULT SERIAL NO.	DATE	MARK	NATURE	MADE	CHK'D	REV'D
ABCDF			REVISIONS			

P:\STDrafter\2015 Sidewalks SRTS Program\Trinh-CPRS\16TH AVE S\A_PLOT FILES\TS5003A-P-ROAD-16TH AVE S.dwg
Oct-23-14 11:53am

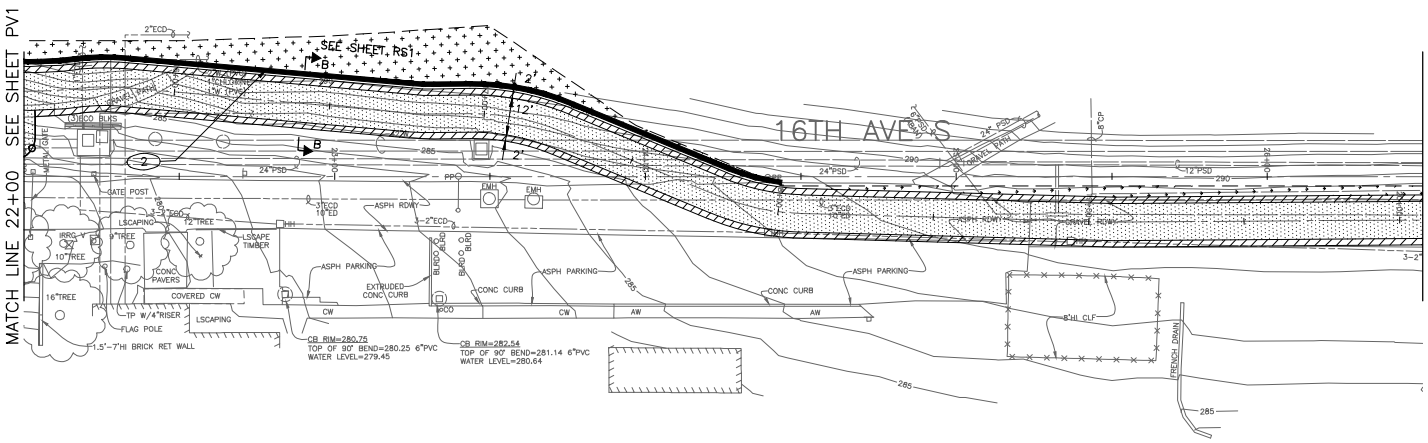

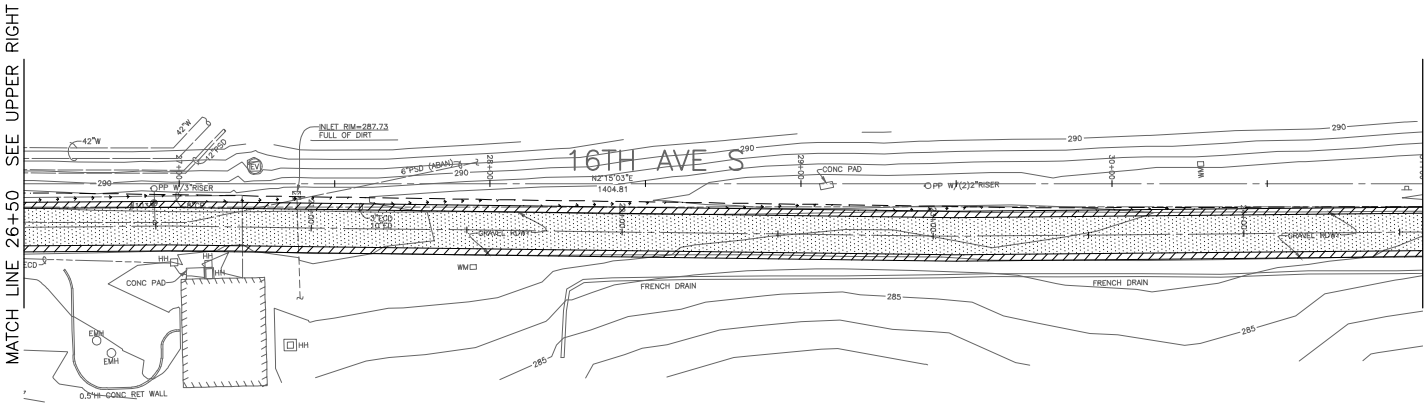

PAVING LEGEND

- PAVEMENT, 3" WMA CL ½" OVER 4" COMPACTED DEPTH MNRL AGG TYPE 2
- 3" MNRL AGG TYPE 1
- TREE AND SHRUB PLANTING PER STD PLAN 100b
- SEEDED GRASS OVER 6" TOPSOIL PER STD PLAN 142
- DETECTABLE WARNING PLATE
- 6" SIDEWALK NON-ROADWAY CEM CONC W/ 25% POZZOLANDS PER STD PLAN 432A
- ROCK FACING PER STD PLAN 141
- VERTICAL PEDESTRIAN RAILING PER STD PLAN 443
- TOE OF FILL
- TOP OF CUT

CONSTRUCTION NOTES

1. MATCH EX SIDEWALK/LANDING
2. INSTALL ROCK FACING PER STD PLAN 141

N

20 10 0 20 40
SCALE IN FEET

PV2
GRADING PAVING AND DRAINAGE PLAN
16TH AVE S

CALL 2 WORKING DAYS BEFORE YOU DIG 1-800-424-5555

60% REVIEW
NOT FOR CONSTRUCTION
OCTOBER 2014

APPROVED FOR ADVERTISING
NANCY LOCKE
DEPARTMENT OF FINANCE & ADMINISTRATIVE SERVICES
SEATTLE, WASHINGTON . . . . . 20 . .
BY:
PURCHASING & CONTRACTING SERVICES DIRECTOR

NAME OR INITIALS AND DATE
DESIGNED PT. . . . . .
CHECKED . . . . . .
DRAWN . . . . . .
CHECKED PT . . . . . .

INITIALS AND DATE
REVIEWED:
DES. . . . . CONST. . . . . .
SDOT . . . . . PROJ. MGR. . . . . .
RECEIVED . . . . . .
REVISED AS BUILT . . . . . .

ALL WORK SHALL BE DONE IN ACCORDANCE WITH THE CITY OF SEATTLE STANDARD PLANS AND SPECIFICATIONS AND OTHER DOCUMENTS CALLED FOR IN SECTION 0-02.3 OF THE PROJECT MANUAL.

STATE OF WASHINGTON 51781 REGISTERED PROFESSIONAL ENGINEER

City of Seattle
Seattle Department of Transportation
ORDINANCE NO. . . . . APPROVED. . . . . .
FUND: . . . . . .
SCALE: H. 1"=20', V. 1"=10' INSPECTOR'S BOOK . . . . . .

2015 SIDEWALK DEVELOPMENT AND SRTS – PACKAGE 4

JOB NO. PC TS6422A
R/W
CO TS6422A
VAULT PLAN NO. XXX-YYY
SHEET 8 OF 42

VAULT SERIAL NO.	DATE	MARK	NATURE REVISIONS	MADE	CHK'D	REV'D
ABCDF						

P:\STDrafter\2015 Sidewalks SRTS Program\Trinh-CPRS\16TH AVE S\A_PLOT FILES\TS5003A-P-ROAD-16TH AVE S.dwg
Oct-23-14 11:53am

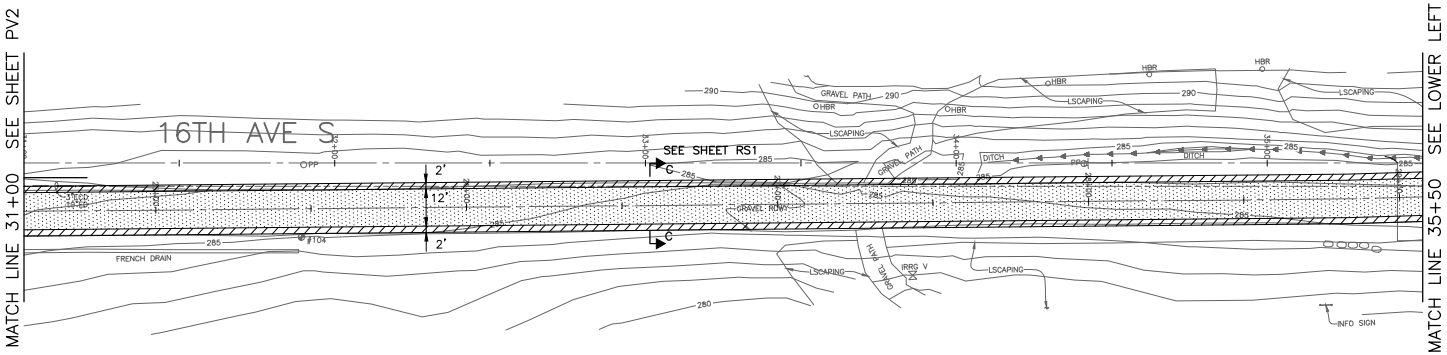

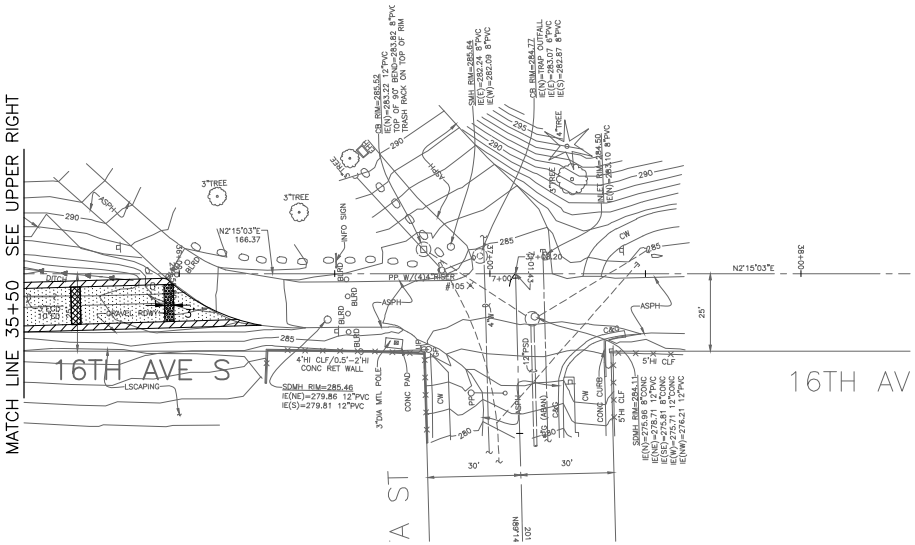

PAVING LEGEND

- PAVEMENT, 3" WMA CL ½" OVER 4" COMPACTED DEPTH MNRL AGG TYPE 2
- 3" MNRL AGG TYPE 1
- TREE AND SHRUB PLANTING PER STD PLAN 100b
- SEEDED GRASS OVER 6" TOPSOIL PER STD PLAN 142
- DETECTABLE WARNING PLATE
- 6" SIDEWALK NON-ROADWAY CEM CONC W/ 25% POZZOLANDS PER STD PLAN 432A
- ROCK FACING PER STD PLAN 141
- VERTICAL PEDESTRIAN RAILING PER STD PLAN 443
- TOE OF FILL
- TOP OF CUT

CONSTRUCTION NOTES

1. MATCH EX SIDEWALK/LANDING
2. INSTALL ROCK FACING PER STD PLAN 141

N

20 10 0 20 40
SCALE IN FEET

PV3
GRADING PAVING AND DRAINAGE PLAN
16TH AVE S

CALL 2 WORKING DAYS BEFORE YOU DIG
1-800-424-5555

60% REVIEW
NOT FOR CONSTRUCTION
OCTOBER 2014

APPROVED FOR ADVERTISING
NANCY LOCKE
DEPARTMENT OF FINANCE & ADMINISTRATIVE SERVICES
SEATTLE, WASHINGTON . . . . . 20 . .
BY:
PURCHASING & CONTRACTING SERVICES DIRECTOR

NAME OR INITIALS AND DATE
DESIGNED PT. . . . . .
CHECKED . . . . . .
DRAWN . . . . . .
CHECKED PT . . . . . .

INITIALS AND DATE
REVIEWED:
DES. . . . . CONST. . . . . .
SDOT . . . . . PROJ. MGR. . . . . .
RECEIVED . . . . . .
REVISED AS BUILT . . . . . .

ALL WORK SHALL BE DONE IN ACCORDANCE WITH THE CITY OF SEATTLE STANDARD PLANS AND SPECIFICATIONS AND OTHER DOCUMENTS CALLED FOR IN SECTION 0-02.3 OF THE PROJECT MANUAL.

STATE OF WASHINGTON 51781 REGISTERED PROFESSIONAL ENGINEER

City of Seattle
Seattle Department of Transportation
ORDINANCE NO. . . . . APPROVED. . . . . .
FUND: . . . . . .
SCALE: H. 1"=20', V. 1"=10' INSPECTOR'S BOOK . . . . . .

2015 SIDEWALK DEVELOPMENT AND SRTS – PACKAGE 4

JOB NO. PC TS6422A
R/W
CO TS6422A
VAULT PLAN NO. XXX-YYY
SHEET 9 OF 42

VAULT SERIAL NO.	DATE	MARK	NATURE	MADE	CHK'D	REV'D
ABCDF			REVISIONS			

P:\STDrafter\2015 Sidewalks SRTS Program\Trinh-CPRS\16TH AVE S\A_PLOT FILES\TS5003A-P-ROAD-16TH AVE S.dwg
Oct-23-14 11:53am

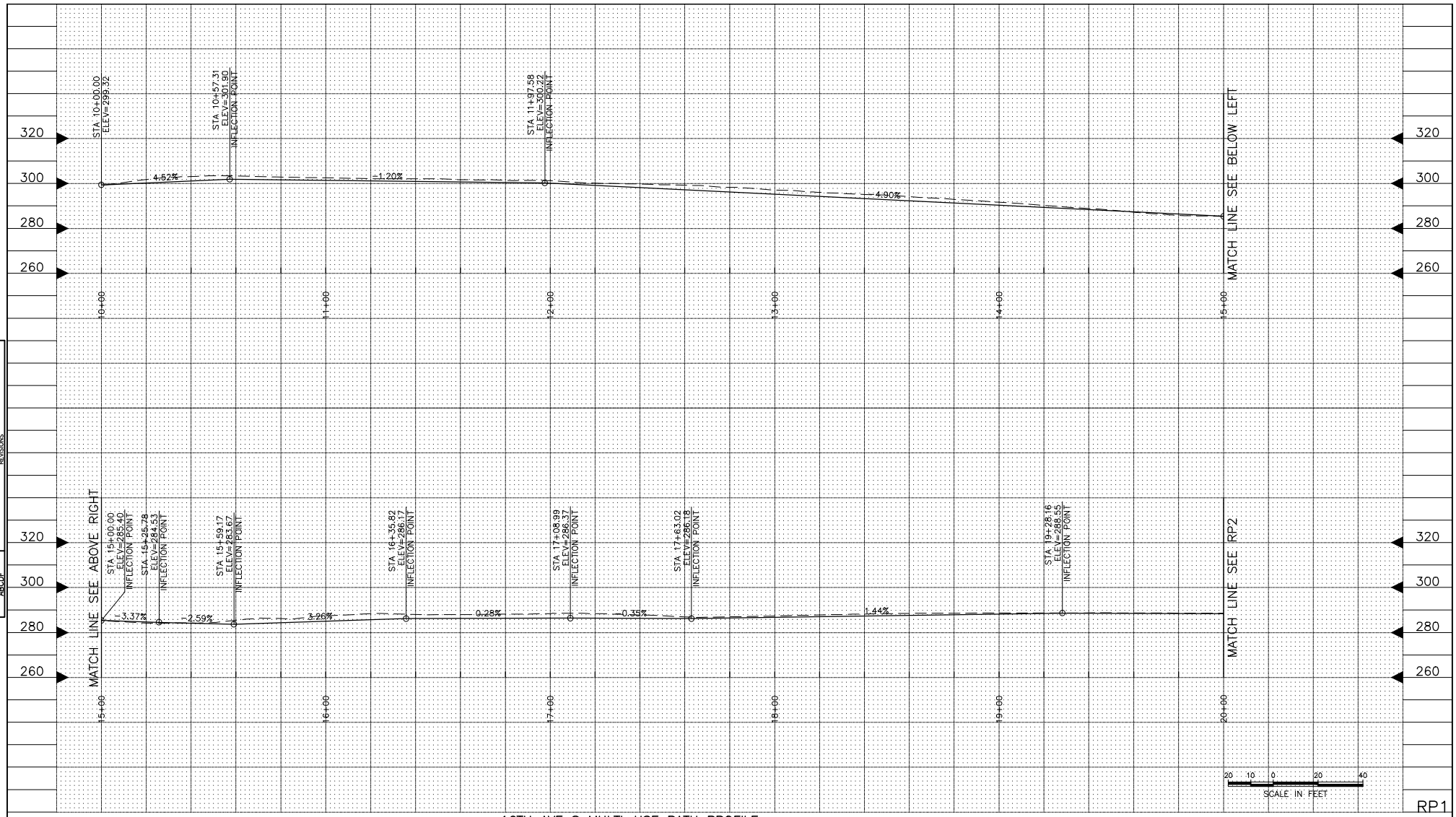

RP1

16TH AVE S MULTI-USE PATH PROFILE

PROFILE STATIONING IS ALONG THE CENTERLINE OF THE PATH AND IS NOT TIED TO THE PROJECT STATIONING. BEGIN PROFILE AT PROJECT STA 65+09.03, OFFSET 34.84' RT (S SPOKANE) AND END AT PROJECT STA 36+12.75, OFFSET 10.32' RT (16TH AVE S)

ROADWAY PROFILES
16TH AVE S

VAULT SERIAL NO.	DATE	MARK	NATURE REVISIONS	MADE	CHK'D	REV'D
ABCDF						

CALL 2 WORKING DAYS BEFORE YOU DIG 1-800-424-5555

60% REVIEW
NOT FOR CONSTRUCTION
OCTOBER 2014

APPROVED FOR ADVERTISING
NANCY LOCKE
DEPARTMENT OF FINANCE & ADMINISTRATIVE SERVICES
SEATTLE, WASHINGTON . . . . . 20 . .
BY: . . . . . .
PURCHASING & CONTRACTING SERVICES DIRECTOR

NAME OR INITIALS AND DATE
DESIGNED PT. . . . . .
CHECKED . . . . . .
DRAWN . . . . . .
CHECKED PT. . . . . .

INITIALS AND DATE
REVIEWED:
DES. . . . . CONST. . . . . .
SDOT . . . . . PROJ. MGR. . . . . .
RECEIVED . . . . . .
REVISED AS BUILT . . . . . .

ALL WORK SHALL BE DONE IN ACCORDANCE WITH THE CITY OF SEATTLE STANDARD PLANS AND SPECIFICATIONS AND OTHER DOCUMENTS CALLED FOR IN SECTION 0-02.3 OF THE PROJECT MANUAL.

STATE OF WASHINGTON 51781 REGISTERED PROFESSIONAL ENGINEER

City of Seattle
Seattle Department of Transportation
ORDINANCE NO. . . . . APPROVED. . . . . .
FUND: . . . . . .
SCALE: H. 1"=20', V. 1"=10' INSPECTOR'S BOOK . . . . . .

2015 SIDEWALK DEVELOPMENT AND SRTS – PACKAGE 4

JOB NO. PC TS6422A
R/W
CO TS6422A
VAULT PLAN NO. XXX-YYY
SHEET 10 OF 42

P:\STDrafter\2015 Sidewalks SRTS Program\Trinh-CPRS\16TH AVE S\A_PLOT FILES\TS5003A-P-RP-16TH AVE S.dwg
Oct-23-14 11:53am

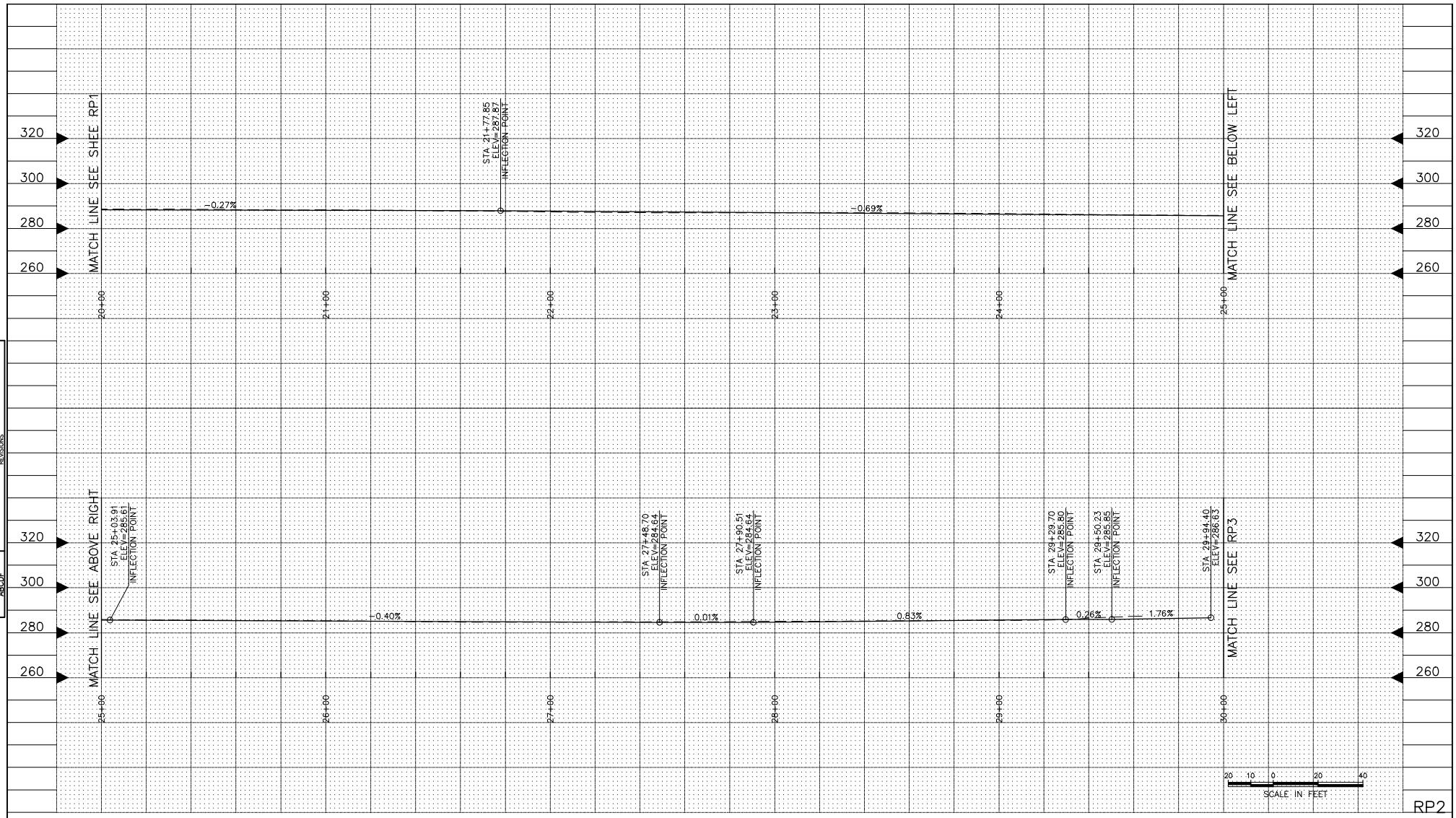

RP2

ROADWAY PROFILES

16TH AVE S

VAULT SERIAL NO.	DATE	MARK	NATURE	MADE	CHK'D	REV'D
ABCDF			REVISIONS			

P:\STDrafter\2015 Sidewalks SRTS Program\Trinh-CPRS\16TH AVE S\A_PLOT FILES\TS5003A-P-RP-16TH AVE S.dwg
Oct-23-14 11:53am

CALL 2 WORKING DAYS
BEFORE YOU DIG
1-800-424-5555

60% REVIEW
NOT FOR CONSTRUCTION
OCTOBER 2014

APPROVED FOR ADVERTISING
NANCY LOCKE
DEPARTMENT OF FINANCE & ADMINISTRATIVE SERVICES
SEATTLE, WASHINGTON . . . . . 20 . .
BY: . . . . . .
PURCHASING & CONTRACTING SERVICES DIRECTOR

NAME OR INITIALS AND DATE
DESIGNED PT. . . . . .
CHECKED . . . . . .
DRAWN . . . . . .
CHECKED PT . . . . . .

INITIALS AND DATE
REVIEWED:
DES. . . . . CONST. . . . .
SDOT . . . . . PROJ. MGR. . . .
RECEIVED . . . . . .
REVISED AS BUILT . . . . . .

ALL WORK SHALL BE DONE IN ACCORDANCE WITH THE CITY OF SEATTLE STANDARD PLANS AND SPECIFICATIONS AND OTHER DOCUMENTS CALLED FOR IN SECTION 0-02.3 OF THE PROJECT MANUAL.

STATE OF WASHINGTON 51781 REGISTERED PROFESSIONAL ENGINEER

City of Seattle
Seattle Department of Transportation
ORDINANCE NO. . . . . APPROVED. . . . . .
FUND: . . . . . .
SCALE: H. 1"=20', V. 1"=10' INSPECTOR'S BOOK . . . . . .

2015 SIDEWALK DEVELOPMENT AND SRTS – PACKAGE 4

JOB NO. PC TS6422A
R/W
CO TS6422A
VAULT PLAN NO. XXX-YYY
SHEET 11 OF 42

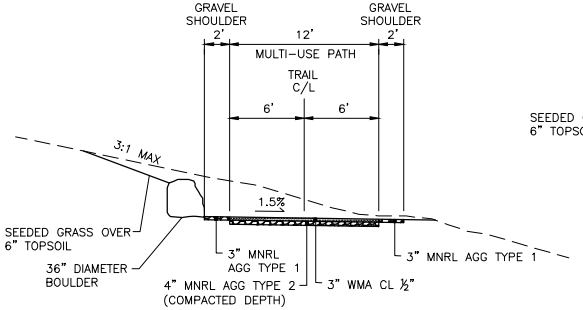

TRAIL SECTION A–A

S SPOKANE ST (LOOKING WEST)

NTS

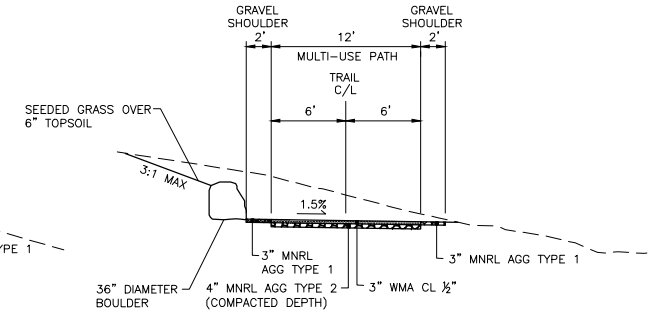

TRAIL SECTION B–B

16TH AVE S

NTS

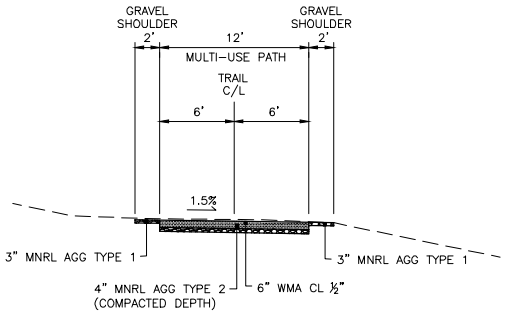

TRAIL SECTION C–C

16TH AVE S

NTS

RS1

ROADWAY SECTIONS

16TH AVE S

CALL 2 WORKING DAYS BEFORE YOU DIG 1-800-424-5555

60% REVIEW
NOT FOR CONSTRUCTION
OCTOBER 2014

APPROVED FOR ADVERTISING
NANCY LOCKE
DEPARTMENT OF FINANCE & ADMINISTRATIVE SERVICES
SEATTLE, WASHINGTON . . . . . 20 . .
BY: . . . . . .
PURCHASING & CONTRACTING SERVICES DIRECTOR

NAME OR INITIALS AND DATE
DESIGNED PT. . . . . .
CHECKED . . . . . .
DRAWN . . . . . .
CHECKED PT . . . . . .

INITIALS AND DATE
REVIEWED:
DES. . . . . CONST. . . . . .
SDOT . . . . . PROJ. MGR. . . . . .
RECEIVED . . . . . .
REVISED AS BUILT . . . . . .

ALL WORK SHALL BE DONE IN ACCORDANCE WITH THE CITY OF SEATTLE STANDARD PLANS AND SPECIFICATIONS AND OTHER DOCUMENTS CALLED FOR IN SECTION 0-02.3 OF THE PROJECT MANUAL.

STATE OF WASHINGTON 51781 REGISTERED PROFESSIONAL ENGINEER

City of Seattle
Seattle Department of Transportation
ORDINANCE NO. . . . . APPROVED. . . . . .
FUND: . . . . . .
SCALE: H. 1"=20', V. 1"=10' INSPECTOR'S BOOK . . . . . .

2015 SIDEWALK DEVELOPMENT AND SRTS – PACKAGE 4

JOB NO. PC TS6422A
R/W
CO TS6422A
VAULT PLAN NO. XXX-YYY
SHEET 12 OF 42

VAULT SERIAL NO.	DATE	MARK	NATURE	MADE	CHK'D	REV'D
ABCDF			REVISIONS			

P:\STDrafter\2015 Sidewalks SRTS Program\Trinh-CPRS\16TH AVE S\A_PLOT FILES\TS5003A-P-RS-16TH AVE S.dwg
Oct-23-14 11:53am

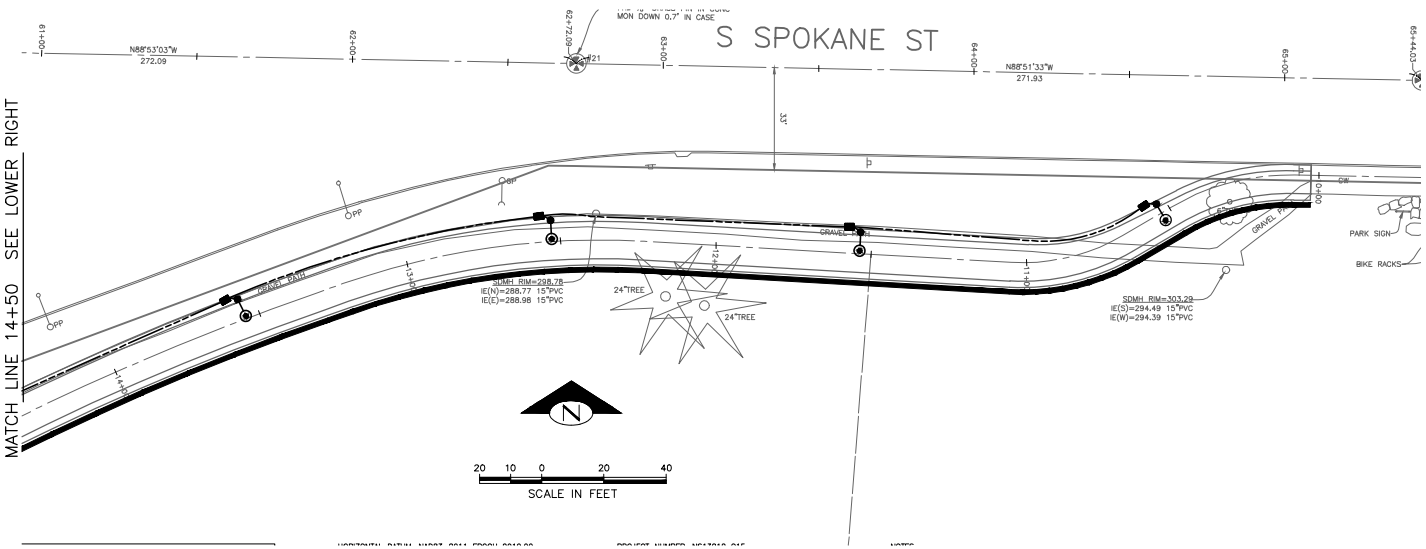

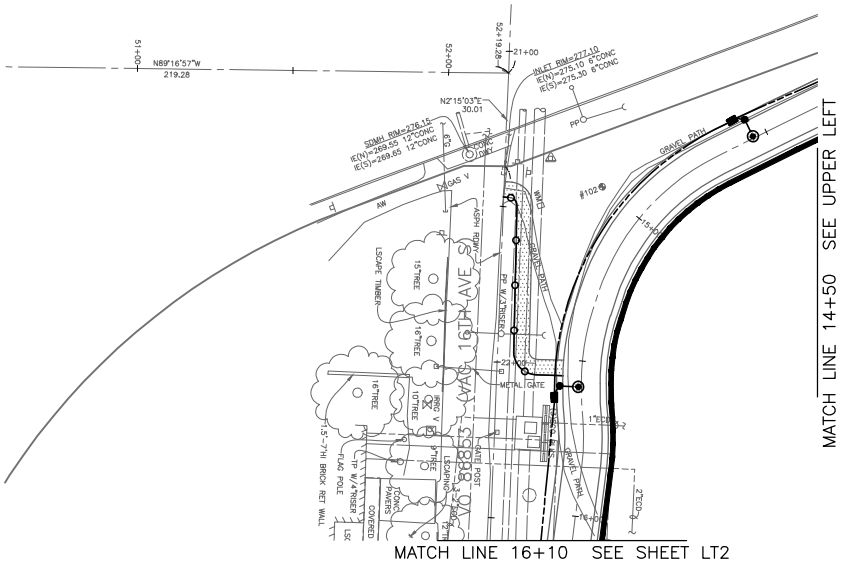

GENERAL NOTES:

1. SEE SHEET LT2 FOR POLE SCHEDULE AND POLE CLEARANCE DETAIL.

CONSTRUCTION NOTES:

(1) SERVICE POINT. FINAL CONNECTION BY SCL.

(2) INSTALL 1–3" RISE ON EXISTING WOOD POLE PER CITY OF SEATTLE STD PLAN 580. COIL 20' OF WIRE IN HANDHOLE FOR SCL FINAL CONNECTION. COORDINATE WITH SCL ELECTRICAL SERVICE REPRESENTATIVE FOR FINAL CONNECTION BY SCL.

(3) TYPE 2 HANDHOLE.

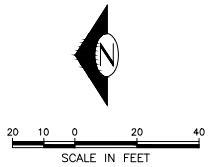

LT1
LIGHTING
16TH AVE S

VAULT SERIAL NO.	DATE	MARK	NATURE	MADE CHK'D	REV'D
ABODF			REVISIONS		

P:\STfrdfw\2015 Sidewalks SRTS Program\Vinh-CPNS\16TH AVE S\A_PLOT FILES\TS5003A-P-LITE-16TH AVE S.dwg
Oct-23-14 11:53am

CALL 2 WORKING DAYS BEFORE YOU DIG 1–800–424–5555

60% REVIEW
NOT FOR CONSTRUCTION
OCTOBER 2014

APPROVED FOR ADVERTISING
NANCY LOCKE
DEPARTMENT OF FINANCE & ADMINISTRATIVE SERVICES
SEATTLE, WASHINGTON . . . . . 20 . .
BY: . . . . . .
PURCHASING & CONTRACTING SERVICES DIRECTOR

NAME OR INITIALS AND DATE
DESIGNED PT. . . . . .
CHECKED . . . . . .
DRAWN . . . . . .
CHECKED PT . . . . . .

INITIALS AND DATE
REVIEWED:
DES. . . . . CONST. . . . . .
SDOT . . . . . PROJ. MGR. . . .
RECEIVED . . . . . .
REVISED AS BUILT . . . . . .

ALL WORK SHALL BE DONE IN ACCORDANCE WITH THE CITY OF SEATTLE STANDARD PLANS AND SPECIFICATIONS AND OTHER DOCUMENTS CALLED FOR IN SECTION 0-02.3 OF THE PROJECT MANUAL.

STATE OF WASHINGTON 51781 REGISTERED PROFESSIONAL ENGINEER

City of Seattle
Seattle Department of Transportation
ORDINANCE NO. . . . . APPROVED. . . . . .
FUND: . . . . . .
SCALE: H. 1"=20', V. 1"=10' INSPECTOR'S BOOK . . . . . .

2015 SIDEWALK DEVELOPMENT AND SRTS – PACKAGE 4

JOB NO. PC TS6422A R/W CO TS6422C
VAULT PLAN NO. XXX–YYY
SHEET 13 OF 42

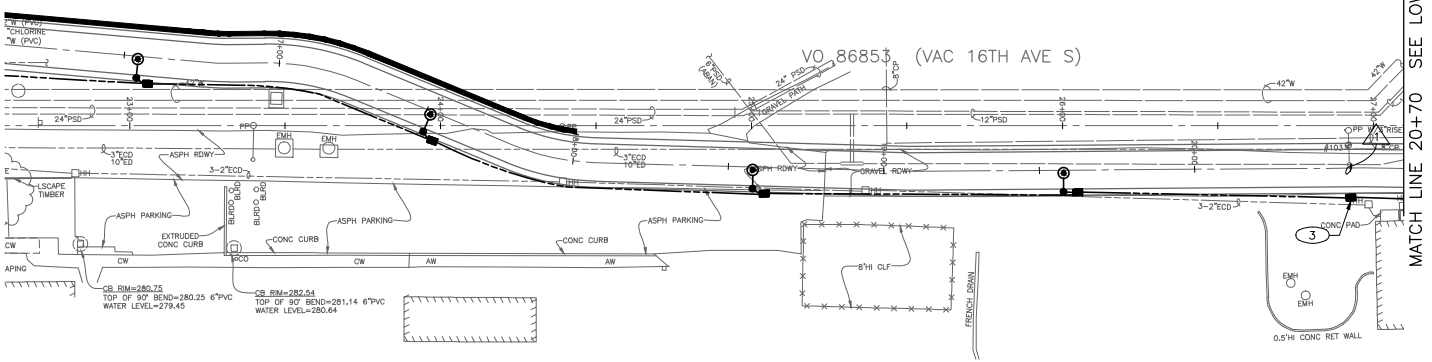

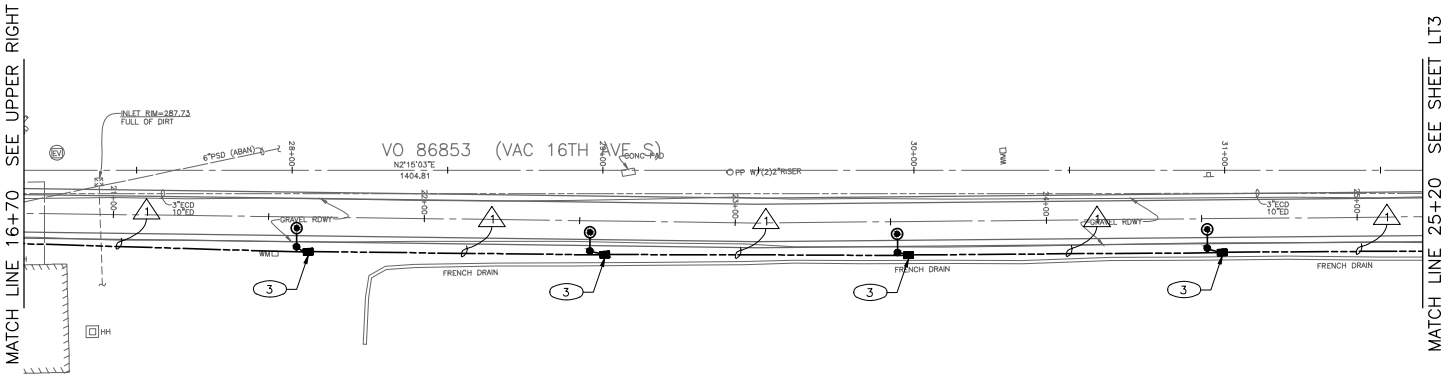

GENERAL NOTES:

1. SEE SHEET LT2 FOR POLE SCHEDULE AND POLE CLEARANCE DETAIL.

CONSTRUCTION NOTES:

1. SERVICE POINT. FINAL CONNECTION BY SCL.
2. INSTALL 1-3" RISE ON EXISTING WOOD POLE PER CITY OF SEATTLE STD PLAN 580. COIL 20' OF WIRE IN HANDHOLE FOR SCL FINAL CONNECTION. COORDINATE WITH SCL ELECTRICAL SERVICE REPRESENTATIVE FOR FINAL CONNECTION BY SCL.
3. TYPE 2 HANDHOLE.

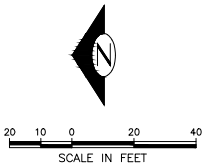

LT2
LIGHTING
16TH AVE S

VAULT SERIAL NO.	DATE	MARK	NATURE	MADE CHK'D	REV'D
ABODF			REVISIONS		

P:\STfrafke\2015 Sidewalks SRTS Program\Vinin-CPMS\16TH AVE S\A_PLOT FILES\TS5003A-P-LITE-16TH AVE S.dwg
Oct-23-14 11:53am

CALL 2 WORKING DAYS BEFORE YOU DIG 1-800-424-5555

60% REVIEW
NOT FOR CONSTRUCTION
OCTOBER 2014

APPROVED FOR ADVERTISING
NANCY LOCKE
DEPARTMENT OF FINANCE & ADMINISTRATIVE SERVICES
SEATTLE, WASHINGTON . . . . . 20 . .
BY: . . . . . .
PURCHASING & CONTRACTING SERVICES DIRECTOR

NAME OR INITIALS AND DATE
DESIGNED PT. . . . . .
CHECKED . . . . . .
DRAWN . . . . . .
CHECKED PT . . . . . .

INITIALS AND DATE
REVIEWED:
DES. . . . . CONST. . . . . .
SDOT . . . . . PROJ. MGR. . . .
RECEIVED . . . . . .
REVISED AS BUILT . . . . . .

ALL WORK SHALL BE DONE IN ACCORDANCE WITH THE CITY OF SEATTLE STANDARD PLANS AND SPECIFICATIONS AND OTHER DOCUMENTS CALLED FOR IN SECTION 0-02.3 OF THE PROJECT MANUAL.

STATE OF WASHINGTON 51781 REGISTERED PROFESSIONAL ENGINEER

City of Seattle
Seattle Department of Transportation
ORDINANCE NO. . . . . APPROVED. . . . . .
FUND: . . . . . .
SCALE: H. 1"=20', V. 1"=10' INSPECTOR'S BOOK . . . . . .

2015 SIDEWALK DEVELOPMENT AND SRTS – PACKAGE 4

JOB NO. PC TS6422A R/W CO TS6422C
VAULT PLAN NO. XXX-YYY
SHEET 14 OF 42

GENERAL NOTES:

1. SEE SHEET LT2 FOR POLE SCHEDULE AND POLE CLEARANCE DETAIL.

CONSTRUCTION NOTES:

1. SERVICE POINT. FINAL CONNECTION BY SCL.
2. INSTALL 1-3" RISE ON EXISTING WOOD POLE PER CITY OF SEATTLE STD PLAN 580. COIL 20' OF WIRE IN HANDHOLE FOR SCL FINAL CONNECTION. COORDINATE WITH SCL ELECTRICAL SERVICE REPRESENTATIVE FOR FINAL CONNECTION BY SCL.
3. TYPE 2 HANDHOLE.

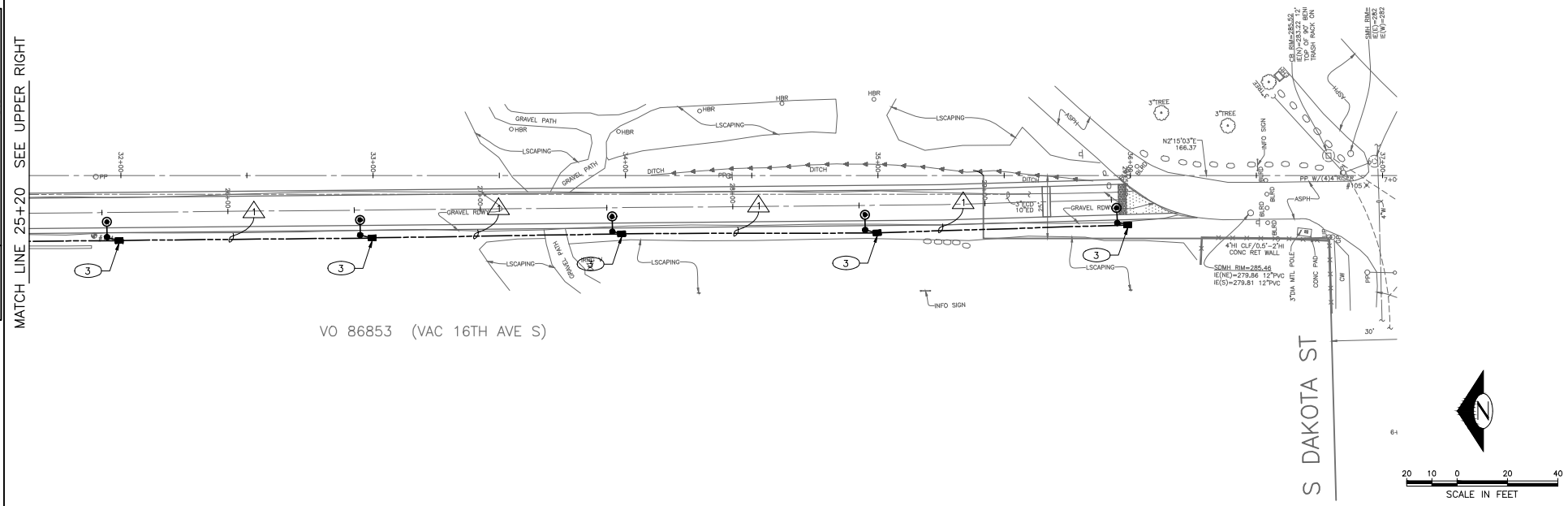

LT3
LIGHTING
16TH AVE S

CALL 2 WORKING DAYS BEFORE YOU DIG 1-800-424-5555

60% REVIEW
NOT FOR CONSTRUCTION
OCTOBER 2014

APPROVED FOR ADVERTISING
NANCY LOCKE
DEPARTMENT OF FINANCE & ADMINISTRATIVE SERVICES
SEATTLE, WASHINGTON . . . . . 20 . .
BY: . . . . . .
PURCHASING & CONTRACTING SERVICES DIRECTOR

NAME OR INITIALS AND DATE
DESIGNED PT. . . . . .
CHECKED . . . . . .
DRAWN . . . . . .
CHECKED PT . . . . . .

INITIALS AND DATE
REVIEWED:
DES. . . . . CONST. . . . . .
SDOT . . . . . PROJ. MGR. . . . . .
RECEIVED . . . . . .
REVISED AS BUILT . . . . . .

ALL WORK SHALL BE DONE IN ACCORDANCE WITH THE CITY OF SEATTLE STANDARD PLANS AND SPECIFICATIONS AND OTHER DOCUMENTS CALLED FOR IN SECTION 0-02.3 OF THE PROJECT MANUAL.

STATE OF WASHINGTON 51781 REGISTERED PROFESSIONAL ENGINEER

City of Seattle
Seattle Department of Transportation
ORDINANCE NO. . . . . APPROVED. . . . . .
FUND: . . . . . .
SCALE: H. 1"=20', V. 1"=10' INSPECTOR'S BOOK . . . . . .

2015 SIDEWALK DEVELOPMENT AND SRTS – PACKAGE 4

JOB NO. PC TS6422A
R/W
CO TS6422C
VAULT PLAN NO. XXX-YYY
SHEET 15 OF 42

VAULT SERIAL NO.	DATE	MARK	NATURE REVISION	MADE	CHK'D	REV'D

P:\STDrafter\2015 Sidewalks SRTS Program\Trinh-CPRS\16TH AVE S\A_PLOT FILES\TS5003A-P-LITE-16TH AVE S.dwg
Oct-23-14 11:53am

GENERAL NOTES:

1. SEE SHEET LT2 FOR POLE SCHEDULE AND POLE CLEARANCE DETAIL.

CONSTRUCTION NOTES:

(1) SERVICE POINT. FINAL CONNECTION BY SCL.

(2) INSTALL 1–3" RISE ON EXISTING WOOD POLE PER CITY OF SEATTLE STD PLAN 580. COIL 20' OF WIRE IN HANDHOLE FOR SCL FINAL CONNECTION. COORDINATE WITH SCL ELECTRICAL SERVICE REPRESENTATIVE FOR FINAL CONNECTION BY SCL.

(3) TYPE 2 HANDHOLE.

WIRING SCHEDULE

WIRE NOTE	CONDUIT/AERIAL	WIRE NUMBER, SIZE, AND MATERIAL	CIRCUITS	NOTES
1	2 - 2" ECD	4 - #6 CU	EXISTING	

POLE SCHEDULE

POLE NO.	STATION & OFFSET	POLE TYPE	POLE LENGTH (FT)	LUMINAIRE WATTAGE OR NO. OF LEDS	LUMINAIRE MOUNTING HEIGHT (FT)	CIRCUIT	NOTES
P 1	STA. 10+50, 3.33' RT	ALUMINUM	16	100 W	18	L1	1
P 2	STA. 11+50, 7.33' RT	ALUMINUM	16	100 W	18	L1	1
P 3	STA. 12+50, 7.33' RT	ALUMINUM	16	100 W	18	L1	1
P 4	STA. 13+50, 7.33' RT	ALUMINUM	16	100 W	18	L1	1
P 5	STA. 14+50, 7.33' RT	ALUMINUM	16	100 W	18	L1	1
P 6	STA. 15+50, 7.33' RT	ALUMINUM	16	100 W	18	L1	1
P 7	STA. 16+50, 7.33' RT	ALUMINUM	16	100 W	18	L1	1
P 8	STA. 17+50, 7.33' RT	ALUMINUM	16	100 W	18	L1	1
P 9	STA. 18+60, 7.33' RT	ALUMINUM	16	100 W	18	L1	1
P 10	STA. 19+60, 7.33' RT	ALUMINUM	16	100 W	18	L1	1
P 11	STA. 21+60, 7.33' RT	ALUMINUM	16	100 W	18	L1	1
P 12	STA. 22+60, 7.33' RT	ALUMINUM	16	100 W	18	L1	1
P 13	STA. 23+60, 7.33' RT	ALUMINUM	16	100 W	18	L1	1
P 14	STA. 24+60, 7.33' RT	ALUMINUM	16	100 W	18	L1	1
P 15	STA. 25+60, 7.33' RT	ALUMINUM	16	100 W	18	L1	1
P 16	STA. 26+60, 7.33' RT	ALUMINUM	16	100 W	18	L1	1
P 17	STA. 27+60, 7.33' RT	ALUMINUM	16	100 W	18	L1	1
P 18	STA. 28+60, 7.33' RT	ALUMINUM	16	100 W	18	L1	1
P 19	STA. 29+60, 7.33' RT	ALUMINUM	16	100 W	18	L1	1
NOTES:							

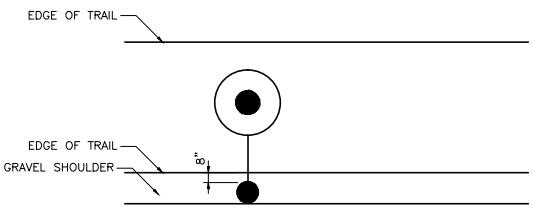

SEE STD PLAN 580 FOR GROUND ROD, GROUND WIRE AND GROUND ROD HANDHOLE LOCATION.

POLE CLEARANCE DETAIL

(NTS)

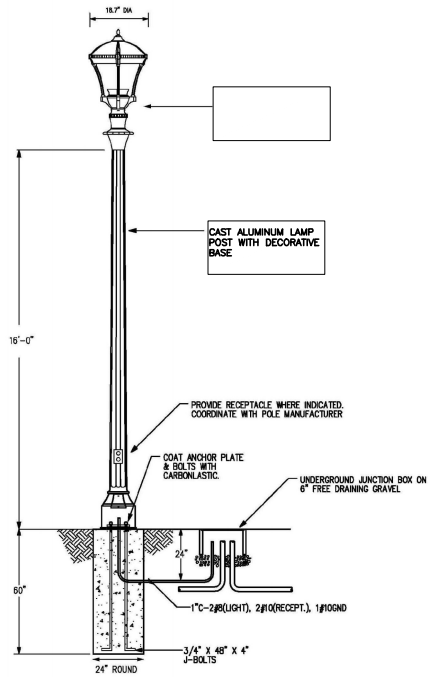

TYPICAL PATHWAY LIGHTING DETAIL

(NTS)

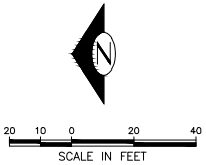

LT4
LIGHTING
16TH AVE S

CALL 2 WORKING DAYS BEFORE YOU DIG 1–800–424–5555

60% REVIEW
NOT FOR CONSTRUCTION
OCTOBER 2014

APPROVED FOR ADVERTISING
NANCY LOCKE
DEPARTMENT OF FINANCE & ADMINISTRATIVE SERVICES
SEATTLE, WASHINGTON . . . . . 20 . .
BY: . . . . . .
PURCHASING & CONTRACTING SERVICES DIRECTOR

NAME OR INITIALS AND DATE
DESIGNED PT. . . . . .
CHECKED. ---- . . . . . .
DRAWN . ---- . . . . . .
CHECKED . PT . . . . . .

INITIALS AND DATE
REVIEWED:
DES. . . . . CONST. . . . . .
SDOT . . . . . PROJ. MGR. . . .
RECEIVED . . . . . .
REVISED AS BUILT . . . . . .

ALL WORK SHALL BE DONE IN ACCORDANCE WITH THE CITY OF SEATTLE STANDARD PLANS AND SPECIFICATIONS AND OTHER DOCUMENTS CALLED FOR IN SECTION 0-02.3 OF THE PROJECT MANUAL.

STATE OF WASHINGTON 51781 REGISTERED PROFESSIONAL ENGINEER

City of Seattle
Seattle Department of Transportation
ORDINANCE NO. . . . . APPROVED. . . . . .
FUND: . . . . . .
SCALE: H. 1"=20', V. 1"=10' INSPECTOR'S BOOK . . . . . .

2015 SIDEWALK DEVELOPMENT AND SRTS – PACKAGE 4

JOB NO. PC TS6422A R/W CO TS6422C
VAULT PLAN NO. XXX–YYY
SHEET 16 OF 42

VAULT SERIAL NO.	DATE	MARK	NATURE REVISIONS	MADE CHK'D	REV'D
ABODF					

P:\STrafficV\2015 Sidewalks SRTS Program\Vinn-CPHS\16TH AVE S\A_PLOT FILES\TS5003A-P-LITE-16TH AVE S.dwg
Oct-23-14 11:54am

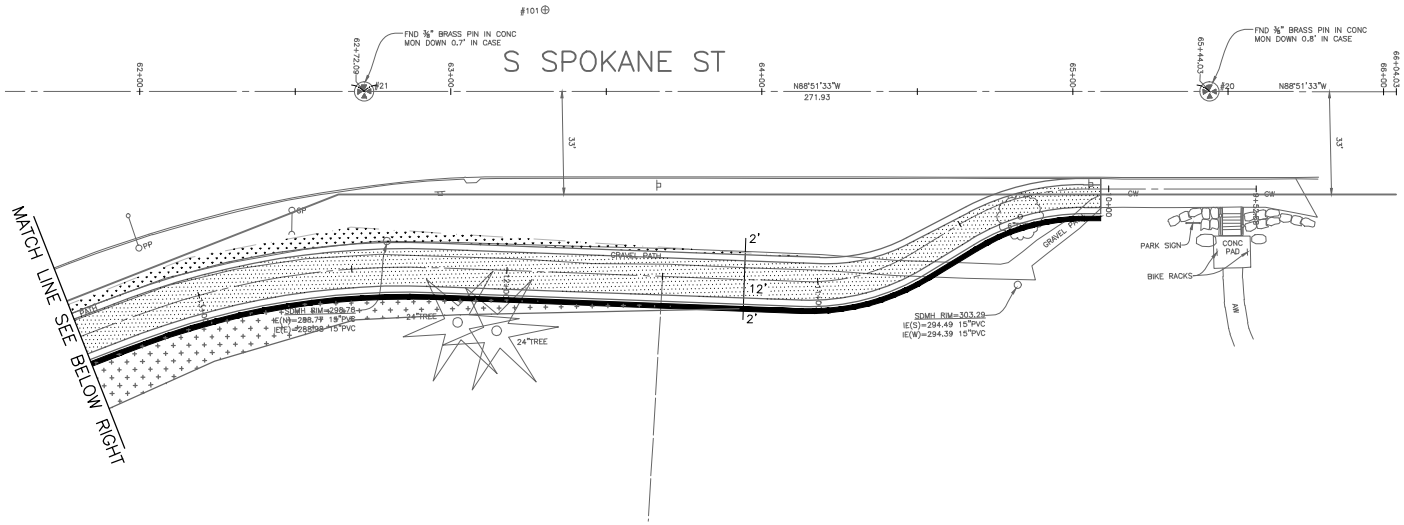

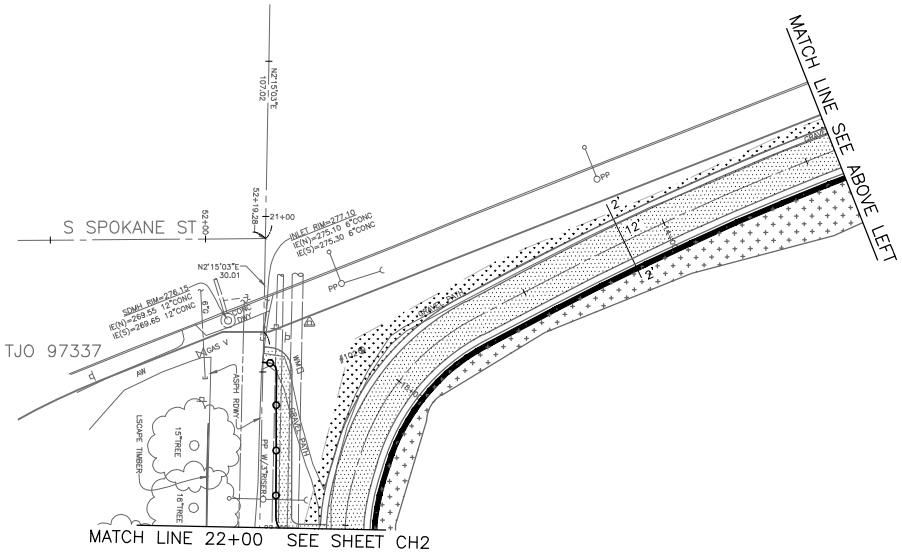

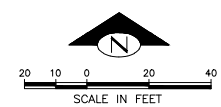

CH1
CHANNELIZATION AND SIGNING
16TH AVE S

CALL 2 WORKING DAYS
BEFORE YOU DIG
1-800-424-5555

60% REVIEW
NOT FOR CONSTRUCTION
OCTOBER 2014

APPROVED FOR ADVERTISING
NANCY LOCKE
DEPARTMENT OF FINANCE & ADMINISTRATIVE SERVICES
SEATTLE, WASHINGTON . . . . . 20 . .
BY:
PURCHASING & CONTRACTING SERVICES DIRECTOR

NAME OR INITIALS AND DATE
DESIGNED PT. . . . . .
CHECKED . . . . . .
DRAWN . . . . . .
CHECKED PT . . . . . .

INITIALS AND DATE
REVIEWED:
DES. . . . . CONST. . . . . .
SDOT . . . . . PROJ. MGR. . . . . .
RECEIVED . . . . . .
REVISED AS BUILT . . . . . .

ALL WORK SHALL BE DONE IN ACCORDANCE WITH THE CITY OF SEATTLE STANDARD PLANS AND SPECIFICATIONS AND OTHER DOCUMENTS CALLED FOR IN SECTION 0-02.3 OF THE PROJECT MANUAL.

STATE OF WASHINGTON 51781 REGISTERED PROFESSIONAL ENGINEER

City of Seattle
Seattle Department of Transportation
ORDINANCE NO. . . . . APPROVED. . . . . .
FUND: . . . . . .
SCALE: H. 1"=20', V. 1"=10' INSPECTOR'S BOOK . . . . . .

2015 SIDEWALK DEVELOPMENT AND SRTS – PACKAGE 4

JOB NO.
PC TS6422A
R/W
CO TS6422A
VAULT PLAN NO.
XXX-YYY
SHEET 17 OF 42

VAULT SERIAL NO.	DATE	MARK	NATURE	MADE	CHK'D	REV'D
ABCDF			REVISIONS			

P:\STDrafter\2015 Sidewalks SRTS Program\Trinh-CPRS\16TH AVE S\A_PLOT FILES\TS5003A-P-CHAN-16TH AVE S.dwg
Oct-23-14 11:54am

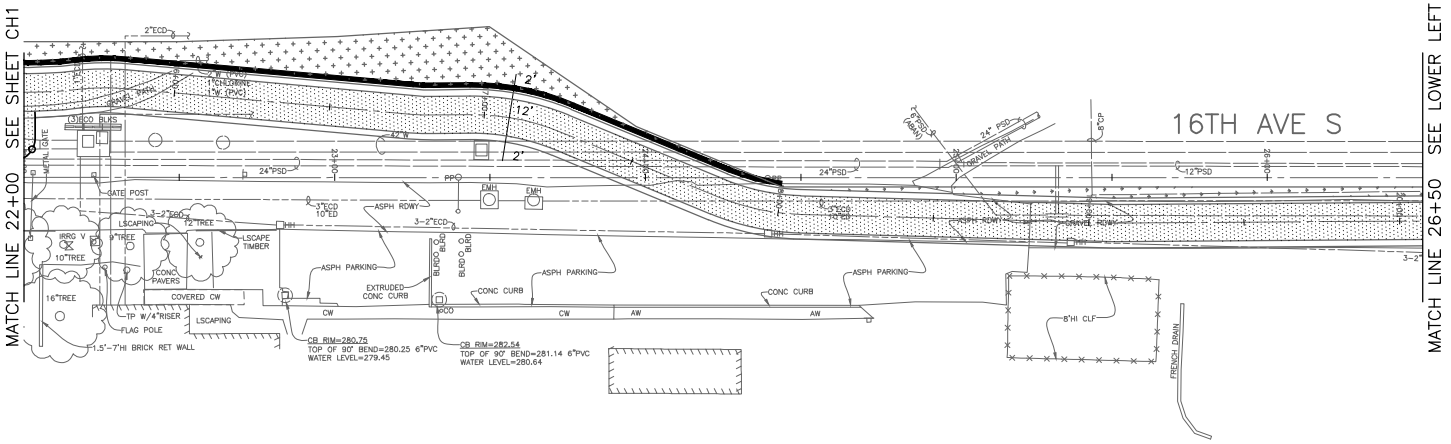

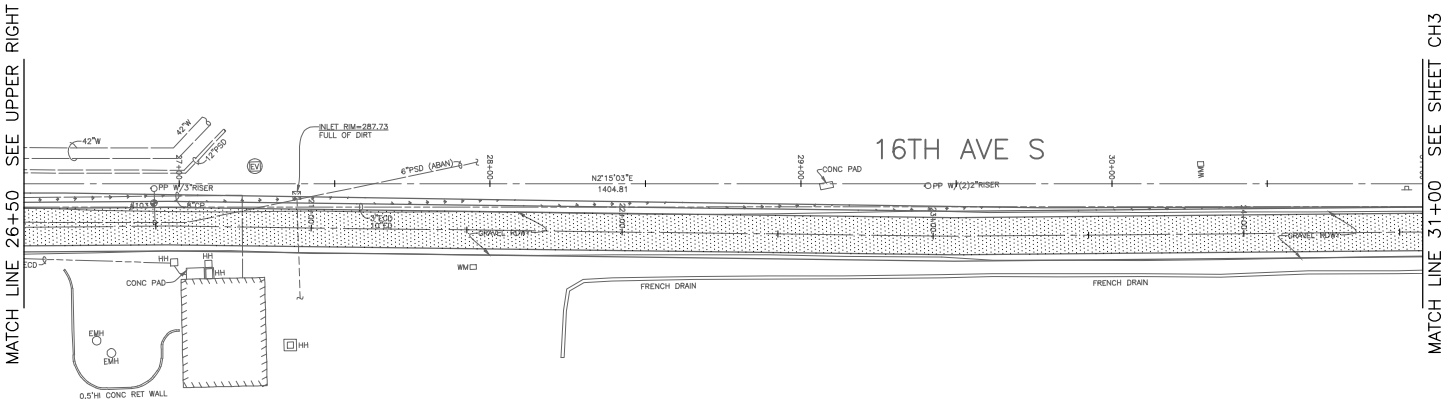

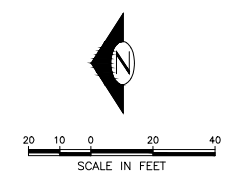

CH2
CHANNELIZATION AND SIGNING
16TH AVE S

VAULT SERIAL NO.	DATE	MARK	NATURE REVISIONS	MADE	CHK'D	REV'D
ABCDF						

P:\STDrafter\2015 Sidewalks SRTS Program\Trinh-CPRS\16TH AVE S\A_PLOT FILES\TS5003A-P-CHAN-16TH AVE S.dwg
Oct-23-14 11:54am

CALL 2 WORKING DAYS
BEFORE YOU DIG
1-800-424-5555

60% REVIEW
NOT FOR CONSTRUCTION
OCTOBER 2014

APPROVED FOR ADVERTISING
NANCY LOCKE
DEPARTMENT OF FINANCE & ADMINISTRATIVE SERVICES
SEATTLE, WASHINGTON . . . . . 20 . .
BY:
PURCHASING & CONTRACTING SERVICES DIRECTOR

NAME OR INITIALS AND DATE
DESIGNED PT. . . . . .
CHECKED . . . . . .
DRAWN . . . . . .
CHECKED PT . . . . . .

INITIALS AND DATE
REVIEWED:
DES. . . . . CONST. . . . . .
SDOT . . . . . PROJ. MGR. . . . . .
RECEIVED . . . . . .
REVISED AS BUILT . . . . . .

ALL WORK SHALL BE DONE IN ACCORDANCE WITH THE CITY OF SEATTLE STANDARD PLANS AND SPECIFICATIONS AND OTHER DOCUMENTS CALLED FOR IN SECTION 0-02.3 OF THE PROJECT MANUAL.

STATE OF WASHINGTON 51781 REGISTERED PROFESSIONAL ENGINEER

City of Seattle
Seattle Department of Transportation
ORDINANCE NO. . . . . APPROVED. . . . . .
FUND: . . . . . .
SCALE: H. 1"=20', V. 1"=10' INSPECTOR'S BOOK . . . . . .

2015 SIDEWALK DEVELOPMENT AND SRTS – PACKAGE 4

JOB NO. PC TS6422A
R/W
CO TS6422A
VAULT PLAN NO. XXX-YYY
SHEET 18 OF 42

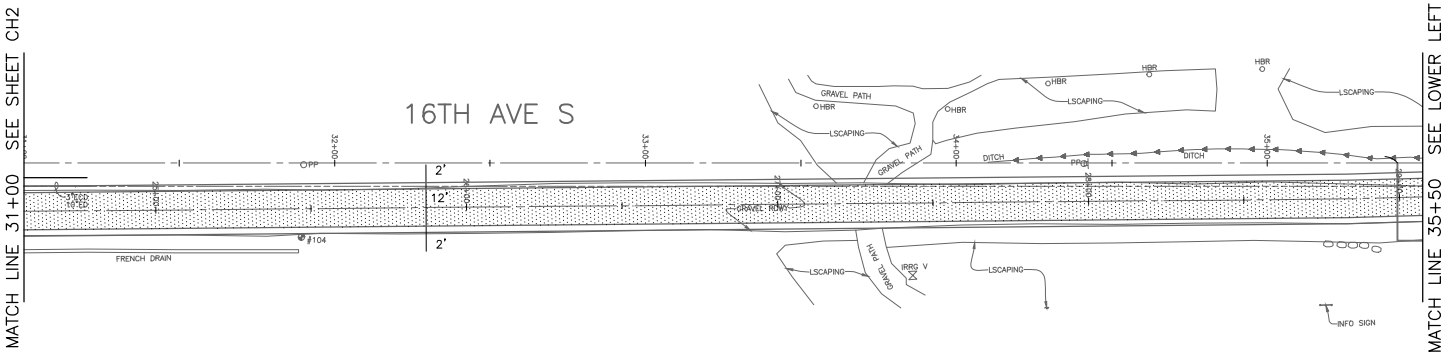

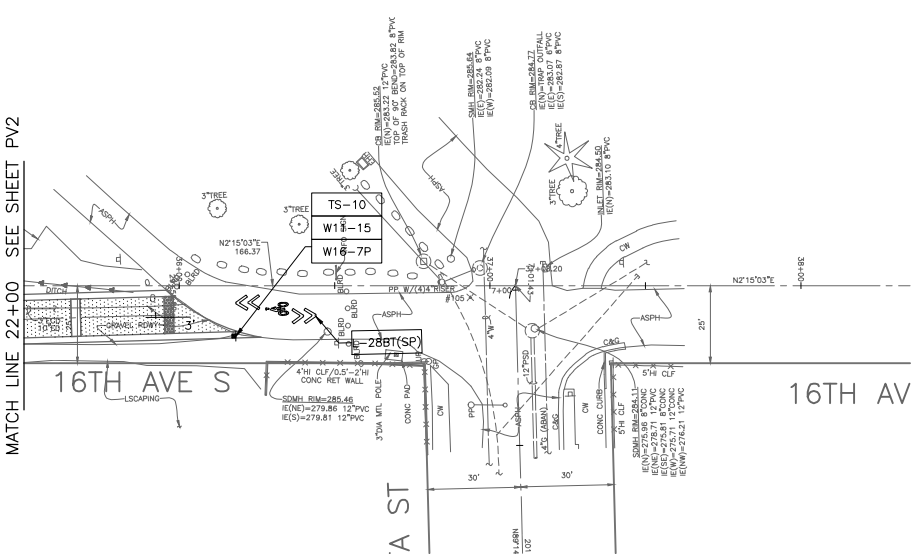

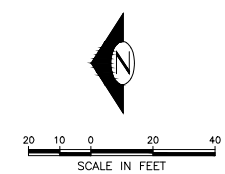

CH3
CHANNELIZATION AND SIGNING
16TH AVE S

VAULT SERIAL NO.	DATE	MARK	NATURE	MADE	CHK'D	REV'D
ABCDF			REVISIONS			

P:\STDrafter\2015 Sidewalks SRTS Program\Trinh-CPRS\16TH AVE S_PLOT FILES\TS5003A-P-CHAN-16TH AVE S.dwg
Oct-23-14 11:54am

CALL 2 WORKING DAYS
BEFORE YOU DIG
1-800-424-5555

60% REVIEW
NOT FOR CONSTRUCTION
OCTOBER 2014

APPROVED FOR ADVERTISING
NANCY LOCKE
DEPARTMENT OF FINANCE & ADMINISTRATIVE SERVICES
SEATTLE, WASHINGTON . . . . . 20 . .
BY:
PURCHASING & CONTRACTING SERVICES DIRECTOR

NAME OR INITIALS AND DATE
DESIGNED PT. . . . . .
CHECKED . . . . . .
DRAWN . . . . . .
CHECKED PT . . . . . .

INITIALS AND DATE
REVIEWED:
DES. . . . . CONST. . . . . .
SDOT . . . . . PROJ. MGR. . . . . .
RECEIVED . . . . . .
REVISED AS BUILT . . . . . .

ALL WORK SHALL BE DONE IN ACCORDANCE WITH THE CITY OF SEATTLE STANDARD PLANS AND SPECIFICATIONS AND OTHER DOCUMENTS CALLED FOR IN SECTION 0-02.3 OF THE PROJECT MANUAL.

STATE OF WASHINGTON 51781 REGISTERED PROFESSIONAL ENGINEER

City of Seattle
Seattle Department of Transportation
ORDINANCE NO. . . . . APPROVED. . . . . .
FUND: . . . . . .
SCALE: H. 1"=20', V. 1"=10' INSPECTOR'S BOOK . . . . . .

2015 SIDEWALK DEVELOPMENT AND SRTS – PACKAGE 4

JOB NO. PC TS6422A
R/W
CO TS6422A
VAULT PLAN NO. XXX-YYY
SHEET 19 OF 42