REGION NO.	STATE	FEDERAL AID PROJECT NO.	SHEET NO.
10	WA	SRTS-1730(001)	28

Vertical Survey Control Point Table				
Point #	Northing	Easting	Elevation	Description
101	254279.47	1264233.88	283.34	MAG 38464201
102	254011.32	1264229.89	282.54	MAG 38464202

Horizontal Survey Control Point Table			
Point #	Northing	Easting	Description
1	254307.28	1264258.31	MIC 38464203
2	254571.39	1264263.75	MIC 38464204
3	254294.75	1264917.00	MIC 38464205
4	254038.62	1264252.72	MIC 38464206
6	254558.78	1264922.25	MIC 38464503
7	254026.34	1264911.78	MIC 38464601
8	254282.29	1265575.95	MIC 38464503
103	254322.03	1264897.38	MAG 38464501
104	254324.31	1264937.70	HUB 38464502

HORIZONTAL DATUM: NAD83-2011 EPOCH 2010.00 DERIVED FROM THE WSRN-CORS

VERTICAL DATUM: NAVD88

BASIS OF BEARING: WASHINGTON STATE PLANE COORDINATE SYSTEM, NORTH ZONE

VERTICAL BENCHMARKS: SNV-7593, CP #103

PROJECT FIELD BOOK: #3846 PGS 45-49

PROJECT SCALE FACTOR: 0.999970378

CONVERGENCE ANGLE: -1°08'06.45059"

PROJECT COMBINED GRID FACTOR: 0.999959166

SCALE FACTOR BASIS: NORTHING: 254294 EASTING: 1264917

SURVEY PROJECT FOLDER NUMBER: 261-827

VIRTUAL VAULT PLAN NUMBER: 265-103

DATE: 1-29-2014

PROJECT NUMBER: NS13212 G15

PROJECT NAME: SAFE ROUTE TO SCHOOL - NW 80TH ST

SURVEY PROJECT FOLDER NUMBER: 261-827

RESEARCH FIELD BOOKS:

REFERENCE DOCUMENTS: 265-103

DATE: 1-29-2014

PRJ. SURVEYOR: M. KIMBOROWICZ

PRIMARY CREW: J. EVANS, J. HATCH

OFFICE TECH: J. GRAHAM

R/W CREATED BY: M. KIMBOROWICZ

GEOREGISTRATION NOTES: NE 1-25-3

COMMENTS:

NOTES:
FIELD MEASUREMENTS FOR THIS SURVEY PERFORMED WITH A 1" LEICA TOTAL STATION USING TRAVERSE METHODS THAT MEET OR EXCEED ACCURACY REQUIREMENTS CONTAINED IN WAC 332.130.090.

THIS SURVEY WAS CONDUCTED WITHOUT THE BENEFIT OF A CURRENT TITLE REPORT AND THEREFORE DOES NOT PURPORT TO SHOW ALL EASEMENTS OR RESTRICTIONS OF RECORD, IN ANY.

SNV-7593: FND BRASS CAP STAMPED "7593" 15' SOUTH OF THE INT OF BKCW, 4" WEST OF BKCW AT THE SE QUAD OF THE INT OF 3RD AVE NW & NW 78TH ST ELEV=282.49'

CP #103: FND MAG NAIL AT THE NW QUAD OF THE INT OF 1ST AVE NW & NW 80TH ST ELEV=311.85'

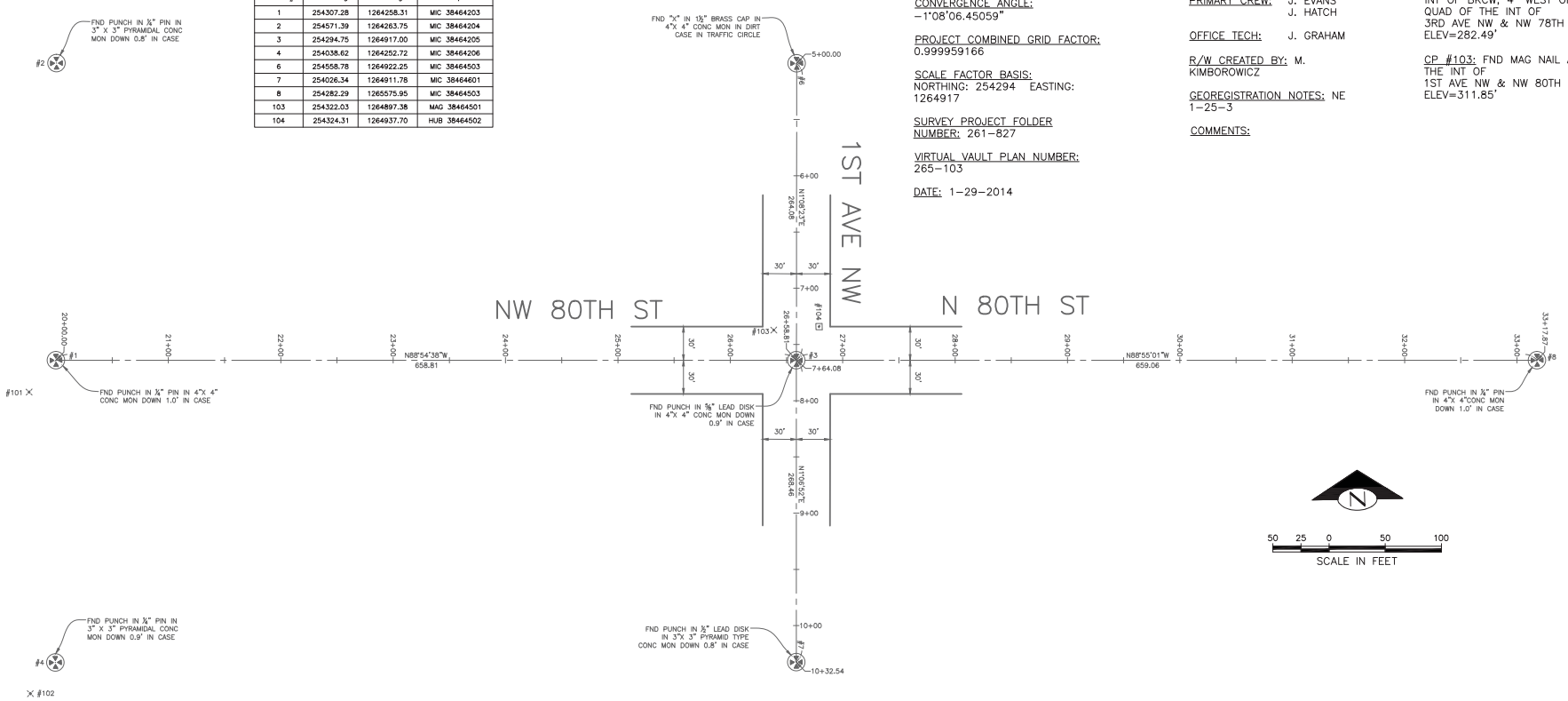

SC1
SURVEY CONTROL
NE 80TH ST AND 1ST AVE NW

VAULT SERIAL NO.	DATE	MARK	NATURE REVISIONS	MADE CHK'D	REV'D
36370					

P:\STDrafter\2015 Sidewalks SRTS Program\Trinh-CPRS\NW 80TH S\A_PLOT FILES\TS5003A-P-CTRL PLAN_NW 80TH ST.dwg
Mar-12-15 8:25am

100% REVIEW
NOT FOR CONSTRUCTION
MARCH 2015

APPROVED FOR ADVERTISING
NANCY LOCKE
DEPARTMENT OF FINANCE & ADMINISTRATIVE SERVICES
SEATTLE, WASHINGTON . . . . . 20 . . .
BY: . . . . . .
PURCHASING & CONTRACTING SERVICES DIRECTOR

NAME OR INITIALS AND DATE	INITIALS AND DATE
DESIGNED PT.	REVIEWED:
CHECKED	DES. . . . . CONST. . . . .
	SDOT . . . . . PROJ. MGR. . . .
DRAWN	RECEIVED . . . . .
CHECKED . PT	REVISED AS BUILT . . . . .

ALL WORK SHALL BE DONE IN ACCORDANCE WITH THE CITY OF SEATTLE STANDARD PLANS AND SPECIFICATIONS AND OTHER DOCUMENTS CALLED FOR IN SECTION 0-02.3 OF THE PROJECT MANUAL.

MARK H. KIMBOROWICZ
STATE OF WASHINGTON
38464
REGISTERED PROFESSIONAL LAND SURVEYOR

City of Seattle
Seattle Department of Transportation
ORDINANCE NO. . . . . APPROVED. . . . . .
FUND: . . . . . .
SCALE: H. 1"=20', V. 1"=10' INSPECTOR'S BOOK . . . . . .

2015 SIDEWALK DEVELOPMENT AND SRTS - PACKAGE 4

JOB NO.	
PC	TS6358A
R/W	
CO	TS6358C
VAULT PLAN NO.	790-199
SHEET 28 OF 55	

REGION NO.	STATE	FEDERAL AID PROJECT NO.	SHEET NO.
10	WA	SRTS-1730(001)	29

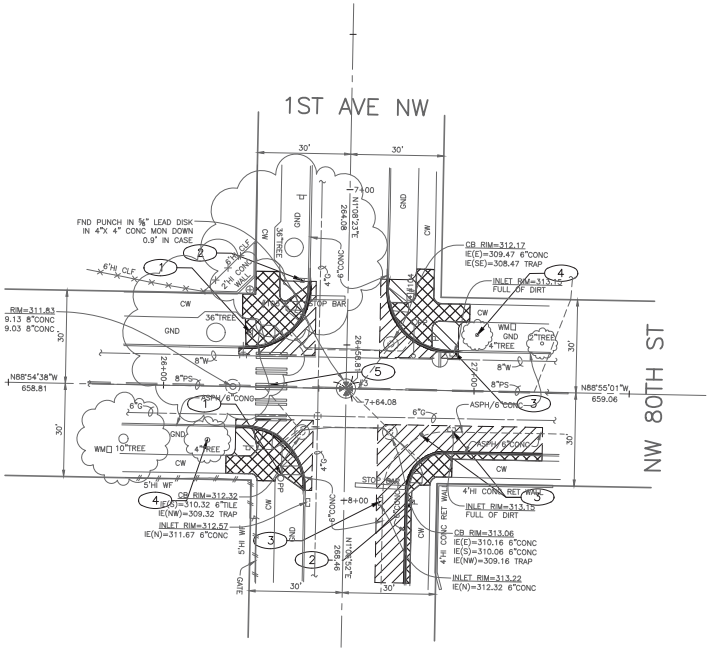

LEGEND:

- REMOVE PAVEMENT
- REMOVE SIDEWALK
- CLEAR AND GRUB, AND COMMON EX.
- REMOVE CURB
- SAWCUT

SITE PREPARATION NOTES:

1. REMOVE SIGN
2. REMOVE AND RELOCATE SIGN TO NEW LOCATION PER CHANNELIZATION PLANS.
3. REMOVE DRAINAGE INLET
4. REMOVE TREE
5. REMOVE OVERHEAD CROSSWALK SIGN AND SPAN WIRE

N

20 10 0 20 40

SCALE IN FEET

SP1

SITE PREPARATION PLAN

NW 80TH ST AND 1ST AVE NW

VAULT SERIAL NO.	DATE	MARK	NATURE	MADE BY	CHK'D	REV'D
36370			REVISIONS			

P:\STDrafter\2015 Sidewalks SRTS Program\Trim-GPRS\NW 80TH SVA_PLOT FILES\TS6003A-P-SITE-NW 80TH ST AND 1ST AVE NW.dwg
Mar-12-15 9:20am

100% REVIEW
NOT FOR CONSTRUCTION
MARCH 2015

APPROVED FOR ADVERTISING
NANCY LOCKE
DEPARTMENT OF FINANCE & ADMINISTRATIVE SERVICES
SEATTLE, WASHINGTON . . . . . 20 . .

BY: . . . . . .
PURCHASING & CONTRACTING SERVICES DIRECTOR

NAME OR INITIALS AND DATE
DESIGNED PT. . . . . .
CHECKED . . . . . .
DRAWN . . . . . .
CHECKED PT . . . . . .

INITIALS AND DATE
REVIEWED:
DES. . . . . CONST. . . . . .
SDOT . . . . . PROJ. MGR. . . .
RECEIVED . . . . . .
REVISED AS BUILT . . . . . .

ALL WORK SHALL BE DONE IN ACCORDANCE WITH THE CITY OF SEATTLE STANDARD PLANS AND SPECIFICATIONS AND OTHER DOCUMENTS CALLED FOR IN SECTION 0-02.3 OF THE PROJECT MANUAL.

STATE OF WASHINGTON 51781 REGISTERED PROFESSIONAL ENGINEER

City of Seattle
Seattle Department of Transportation
ORDINANCE NO. . . . . APPROVED. . . . . .
FUND: . . . . . .
SCALE: H. 1"=20', V. 1"=10' INSPECTOR'S BOOK . . . . . .

2015 SIDEWALK DEVELOPMENT AND SRTS – PACKAGE 4

JOB NO. PC TS6358A R/W CO TS6358C

VAULT PLAN NO. 790-199

SHEET 29 OF 55

REGION NO.	STATE	FEDERAL AID PROJECT NO.	SHEET NO.
10	WA	SRTS-1730(001)	30

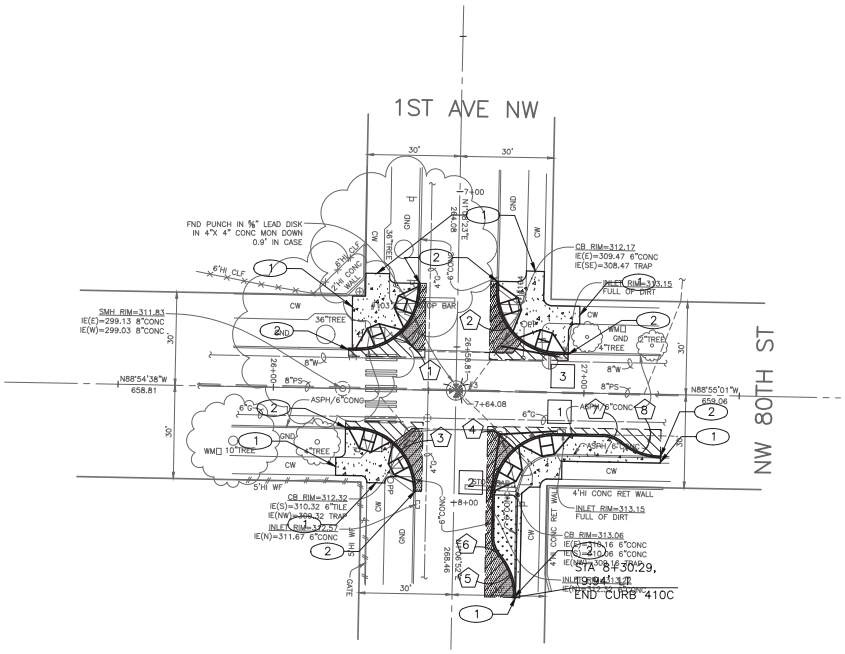

PAVING LEGEND

- 12" ROADWAY CEM CONC, VARIABLE MIXES, OVER MNRL AGG TYPE 2, 6" COMPACTED DEPTH. SEE DETAIL 1 ON SHEET PDT1.
- PAVEMENT, 2" HMA CL ¾", OVER 12" ROADWAY CEM CONC, VARIABLE MIXES. SEE DETAIL 2 ON SHEET PDT1.
- CEM CONC SIDEWALK W/ 25% POZZOLANS, PER STD PLAN 420.
- SEEDED GRASS OVER 6" TOPSOIL PER STD PLAN 142
- CURB RAMP W/25% POZZOLANS AND DETECTABLE WARNING, PER STD PLAN 422A.
- CEM CONC CURB PER STD PLAN 410C (H=4").

CONSTRUCTION NOTES

1. MATCH EX SIDEWALK/LANDING
2. MATCH EX CURB

CURB RETURN SCHEDULE

⬠	PC – STA, OFFSET	PT – STA, OFFSET	RADIUS	LENGTH	Δ	PC	1/4	1/2	3/4	PT
1	7+51.65, 32.20' RT	7+31.61, 12.27' RT	20.00'	31.39'	89.92	311.23	311.29	311.34	311.40	311.46
2	7+31.09, 12.52' LT	7+51.68, 32.82' LT	20.00'	31.53'	90.32	311.72	311.85	312.03	312.33	312.40
3	7+76.55, 32.53' RT	7+96.74, 12.45' RT	20.00'	31.58'	90.46	311.92	312.12	312.22	312.36	312.60
4	7+77.37, 32.45' LT	7+97.38, 12.46' LT	20.00'	31.42'	90.00	313.22	313.09	313.05	313.00	312.95
5	8+17.05, 14.96' LT	8+30.29, 19.94' LT	20.00'	14.46'	41.44	313.87	–	–	–	314.11
6	8+10.45, 12.47' LT	8+17.05, 14.96' LT	10.00'	7.21'	41.30	313.52	–	–	–	313.76
7	27+06.25, 13.31' RT	27+12.51, 15.51' RT	10.00'	6.76'	38.73	314.39	–	–	–	314.83
8	27+12.51, 15.51' RT	27+25.02, 19.91' RT	20.00'	5.77'	33.09	315.25	–	–	–	315.65

DRAINAGE STRUCTURE SCHEDULE

#	STATION (1ST AVE NW–LINE)	OFFSET	TYPE	RIM	INVERT (OUT)	INVERT (IN)	PIPE
1	7+77.37	34.34' LT	INLET 250A	313.15	310.96	–	18LF 8" INLET CONN @ 5%
2	8+00.18	12.47' LT	INLET 250A	313.22	311.26	–	21LF 8" INLET CONN @ 5%
3	7+51.67	34.55' LT	INLET 250A	313.15	310.37	–	19LF 8" INLET CONN @ 5%

N

20 10 0 20 40

SCALE IN FEET

PV1

GRADING PAVING AND DRAINAGE PLAN
NW 80TH ST AND 1ST AVE NW

100% REVIEW
NOT FOR CONSTRUCTION
MARCH 2015

APPROVED FOR ADVERTISING
NANCY LOCKE
DEPARTMENT OF FINANCE & ADMINISTRATIVE SERVICES
SEATTLE, WASHINGTON . . . . . 20 . .
BY: . . . . . .
PURCHASING & CONTRACTING SERVICES DIRECTOR

NAME OR INITIALS AND DATE
DESIGNED PT. . . . . .
CHECKED . . . . . .
DRAWN . . . . . .
CHECKED PT . . . . . .

INITIALS AND DATE
REVIEWED:
DES. . . . . CONST. . . . . .
SDOT . . . . . PROJ. MGR. . . . .
RECEIVED . . . . . .
REVISED AS BUILT . . . . . .

ALL WORK SHALL BE DONE IN ACCORDANCE WITH THE CITY OF SEATTLE STANDARD PLANS AND SPECIFICATIONS AND OTHER DOCUMENTS CALLED FOR IN SECTION 0-02.3 OF THE PROJECT MANUAL.

STATE OF WASHINGTON 51781 REGISTERED PROFESSIONAL ENGINEER

City of Seattle
Seattle Department of Transportation
ORDINANCE NO. . . . . APPROVED. . . . . .
FUND: . . . . . .
SCALE: H. 1"=20', V. 1"=10' INSPECTOR'S BOOK . . . . . .

2015 SIDEWALK DEVELOPMENT AND SRTS – PACKAGE 4

JOB NO. PC TS6358A R/W CO TS6358C
VAULT PLAN NO. 790–199
SHEET 30 OF 55

MARK	DATE	NATURE REVISIONS	MADE	CHK'D	REV'D

VAULT SERIAL NO. 36370

P:\STDrafter\2015 Sidewalks SRTS Program\Trim-GPRS\NW 80TH ST\A_PLOT FILES\TS6003A-P-ROAD-NW 80TH ST AND 1ST AVE NW.dwg
Mar-12-15 9:21am

REGION NO.	STATE	FEDERAL AID PROJECT NO.	SHEET NO.
10	WA	SRTS-1730(001)	31

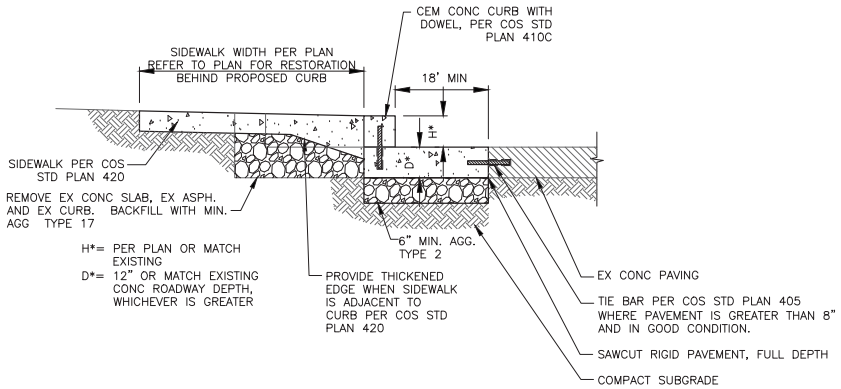

TYPE 1 CURB RESTORATION (1 / DT1)
NTS

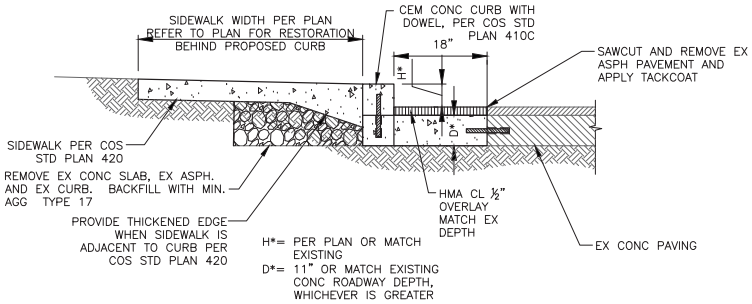

TYPE 2 CURB RESTORATION (2 / DT1)
NTS

PDT1
PAVING DETAILS
NW 80TH ST AND 1ST AVE NW

VAULT SERIAL NO.	DATE	MARK	NATURE REVISIONS	MADE	CHK'D	REV'D
36370						

P:\STDrafter\2015 Sidewalks SRTS Program\Trim-CPRS\NW 80TH SVA_PLOT FILES\TS6003A-P-RS-NW 80TH ST AND 1ST AVE NW.dwg
Mar-12-15 8:25am

100% REVIEW
NOT FOR CONSTRUCTION
MARCH 2015

APPROVED FOR ADVERTISING
NANCY LOCKE
DEPARTMENT OF FINANCE & ADMINISTRATIVE SERVICES
SEATTLE, WASHINGTON . . . . . 20 . .
BY: . . . . . .
PURCHASING & CONTRACTING SERVICES DIRECTOR

NAME OR INITIALS AND DATE	INITIALS AND DATE
DESIGNED PT.	REVIEWED:
CHECKED.	DES. . . . . CONST. . . . .
DRAWN	SDOT . . . . . PROJ. MGR. . . .
CHECKED PT	RECEIVED . . . . .
	REVISED AS BUILT . . . . .

ALL WORK SHALL BE DONE IN ACCORDANCE WITH THE CITY OF SEATTLE STANDARD PLANS AND SPECIFICATIONS AND OTHER DOCUMENTS CALLED FOR IN SECTION 0-02.3 OF THE PROJECT MANUAL.

STATE OF WASHINGTON 51781 REGISTERED PROFESSIONAL ENGINEER

City of Seattle
Seattle Department of Transportation
ORDINANCE NO. . . . . APPROVED. . . . . .
FUND: . . . . . .
SCALE: H. 1"=20', V. 1"=10' INSPECTOR'S BOOK . . . . . .

2015 SIDEWALK DEVELOPMENT AND SRTS – PACKAGE 4

JOB NO. PC TS6358A R/W CO TS6358C
VAULT PLAN NO. 790-199
SHEET 31 OF 55

REGION NO.	STATE	FEDERAL AID PROJECT NO.	SHEET NO.
10	WA	SRTS-1730(001)	32

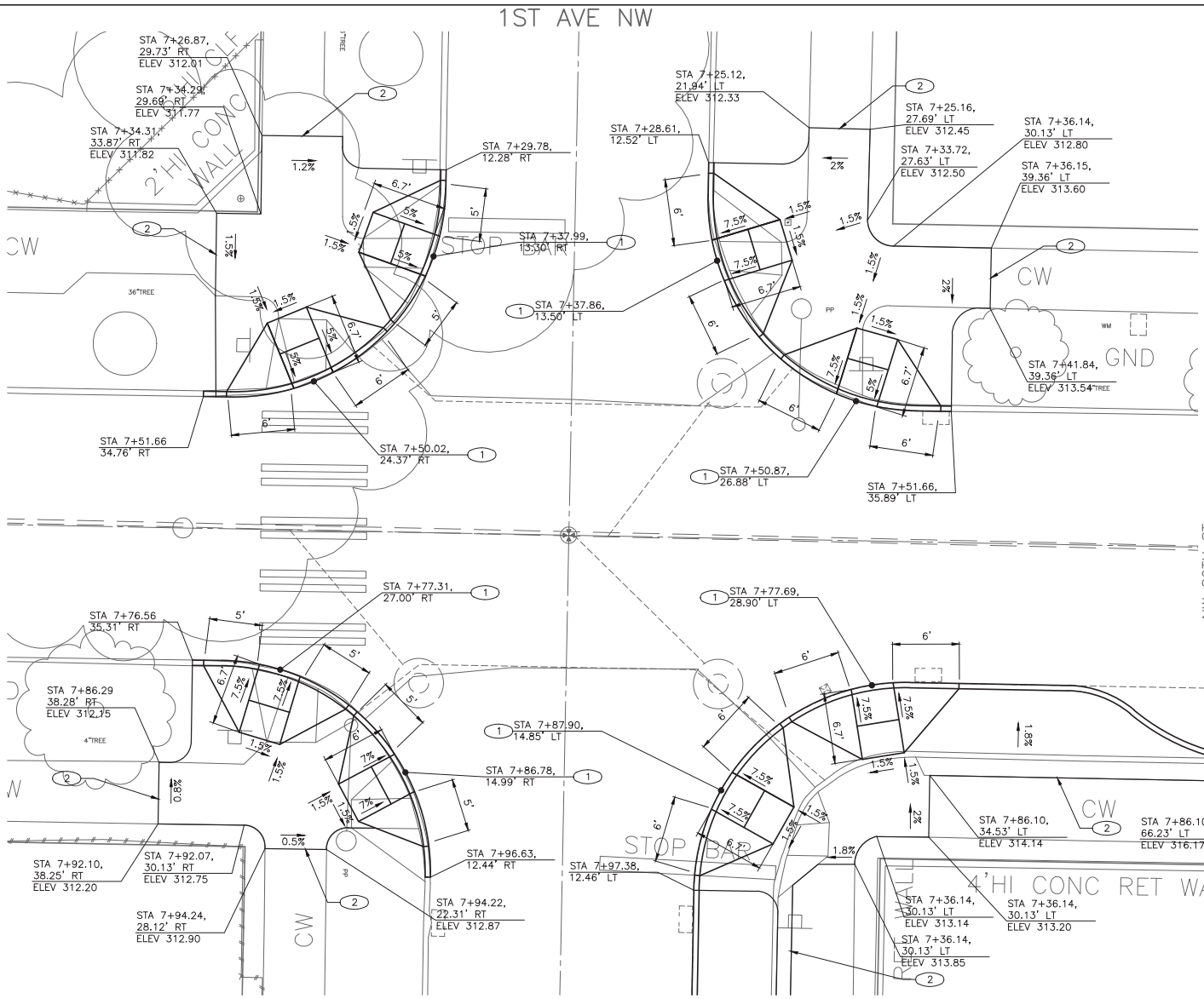

CURB RAMP LEGEND

CURB RAMP (PER STANDARD PLAN 422A)

DETECTABLE WARNING

CONSTRUCTION NOTES

1. CURB RAMP W/ 25% POZZOLANS PER STD PLAN 422A OR NON-STANDARD
2. SAW CEM CONC SIDEWALK, FULL DEPTH, AT EX SCORE LINE

CR1
CURB RAMPS
NW 80TH ST AND 1ST AVE NW

MARK	DATE	NATURE REVISIONS	MADE	CHK'D	REV'D

VAULT SERIAL NO. 36370

P:\STDrafter\2015 Sidewalks SRTS Program\Trim-CPRS\NW 80TH SVA_PLOT FILES\TS6003A-P-CURB-NW 80TH ST AND 1ST AVE NW.dwg
Mar-12-15 9:24am

100% REVIEW
NOT FOR CONSTRUCTION
MARCH 2015

APPROVED FOR ADVERTISING
NANCY LOCKE
DEPARTMENT OF FINANCE & ADMINISTRATIVE SERVICES
SEATTLE, WASHINGTON . . . . . 20 . .
BY: . . . . . .
PURCHASING & CONTRACTING SERVICES DIRECTOR

NAME OR INITIALS AND DATE
DESIGNED .PT. . . . . .
CHECKED. . . . . .
DRAWN . . . . . .
CHECKED .PT . . . . . .

INITIALS AND DATE
REVIEWED:
DES. . . . . CONST. . . . . .
SDOT . . . . . PROJ. MGR. . . . .
RECEIVED . . . . . .
REVISED AS BUILT . . . . . .

ALL WORK SHALL BE DONE IN ACCORDANCE WITH THE CITY OF SEATTLE STANDARD PLANS AND SPECIFICATIONS AND OTHER DOCUMENTS CALLED FOR IN SECTION 0-02.3 OF THE PROJECT MANUAL.

STATE OF WASHINGTON 51781 REGISTERED PROFESSIONAL ENGINEER

City of Seattle
Seattle Department of Transportation
ORDINANCE NO. . . . . APPROVED. . . . . .
FUND: . . . . . .
SCALE: H. 1"=20', V. 1"=10' INSPECTOR'S BOOK . . . . . .

2015 SIDEWALK DEVELOPMENT AND SRTS – PACKAGE 4

JOB NO. PC TS6358A R/W CO TS6358C
VAULT PLAN NO. 790-199
SHEET 32 OF 55

REGION NO.	STATE	FEDERAL AID PROJECT NO.	SHEET NO.
10	WA	SRTS-1730(001)	33

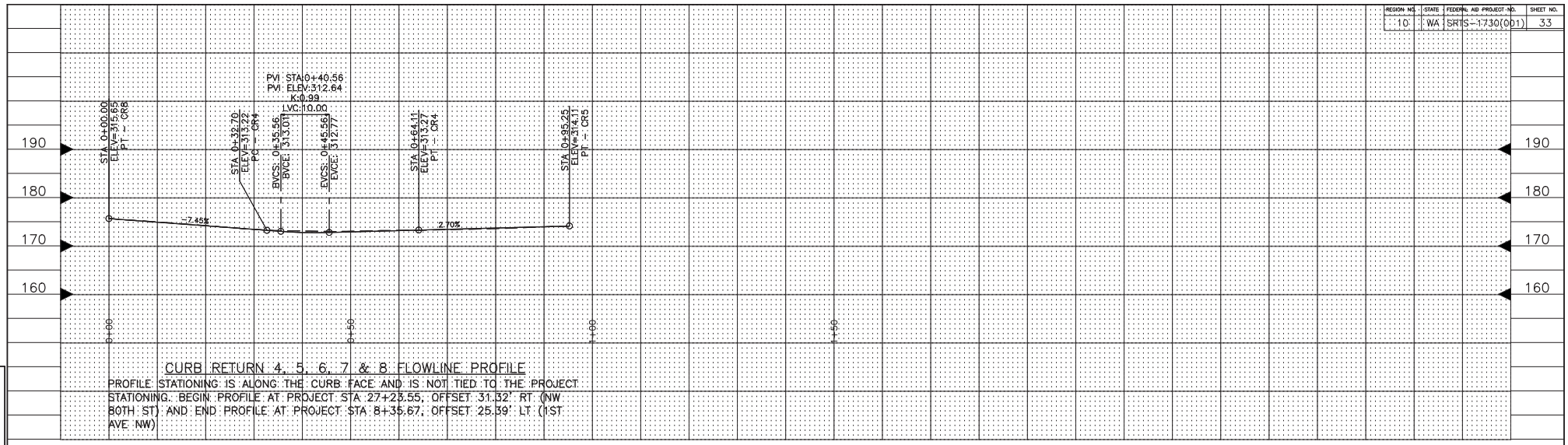

CURB RETURN 4, 5, 6, 7 & 8 FLOWLINE PROFILE

PROFILE STATIONING IS ALONG THE CURB FACE AND IS NOT TIED TO THE PROJECT STATIONING. BEGIN PROFILE AT PROJECT STA 27+23.55, OFFSET 31.32' RT (NW 80TH ST) AND END PROFILE AT PROJECT STA 8+35.67, OFFSET 25.39' LT (1ST AVE NW)

VAULT SERIAL NO.	DATE	MARK	NATURE REVISIONS	MADE BY	CHK'D	REV'D
36370						

P:\STDrafter\2015 Sidewalks SRTS Program\Trim-CPRS\NW 80TH SVA_PLOT FILES\TS5003A-P-RP-NW 80TH ST AND 1ST AVE NW.dwg
Mar-12-15 8:26am

10 5 0 10 20
SCALE IN FEET

RP1
ROADWAY PROFILES
NW 80TH ST AND 1ST AVE NW

100% REVIEW
NOT FOR CONSTRUCTION
MARCH 2015

APPROVED FOR ADVERTISING
NANCY LOCKE
DEPARTMENT OF FINANCE & ADMINISTRATIVE SERVICES
SEATTLE, WASHINGTON . . . . . 20 . .
BY: . . . . . .
PURCHASING & CONTRACTING SERVICES DIRECTOR

NAME OR INITIALS AND DATE
DESIGNED PT. . . . . .
CHECKED PT. . . . . .
DRAWN PT. . . . . .
CHECKED PT. . . . . .

INITIALS AND DATE
REVIEWED:
DES. . . . . CONST. . . . . .
SDOT . . . . . PROJ. MGR. . . .
RECEIVED . . . . . .
REVISED AS BUILT . . . . . .

ALL WORK SHALL BE DONE IN ACCORDANCE WITH THE CITY OF SEATTLE STANDARD PLANS AND SPECIFICATIONS AND OTHER DOCUMENTS CALLED FOR IN SECTION 0-02.3 OF THE PROJECT MANUAL.

STATE OF WASHINGTON 51781 REGISTERED PROFESSIONAL ENGINEER

City of Seattle
Seattle Department of Transportation
ORDINANCE NO. . . . . APPROVED. . . . . .
FUND: . . . . . .
SCALE: H. 1"=20', V. 1"=10' INSPECTOR'S BOOK. . . . . .

2015 SIDEWALK DEVELOPMENT AND SRTS – PACKAGE 4

JOB NO. PC TS6358A R/W CO TS6358C
VAULT PLAN NO. 790-199
SHEET 33 OF 55

REGION NO.	STATE	FEDERAL AID PROJECT NO.	SHEET NO.
10	WA	SRTS-1730(001)	34

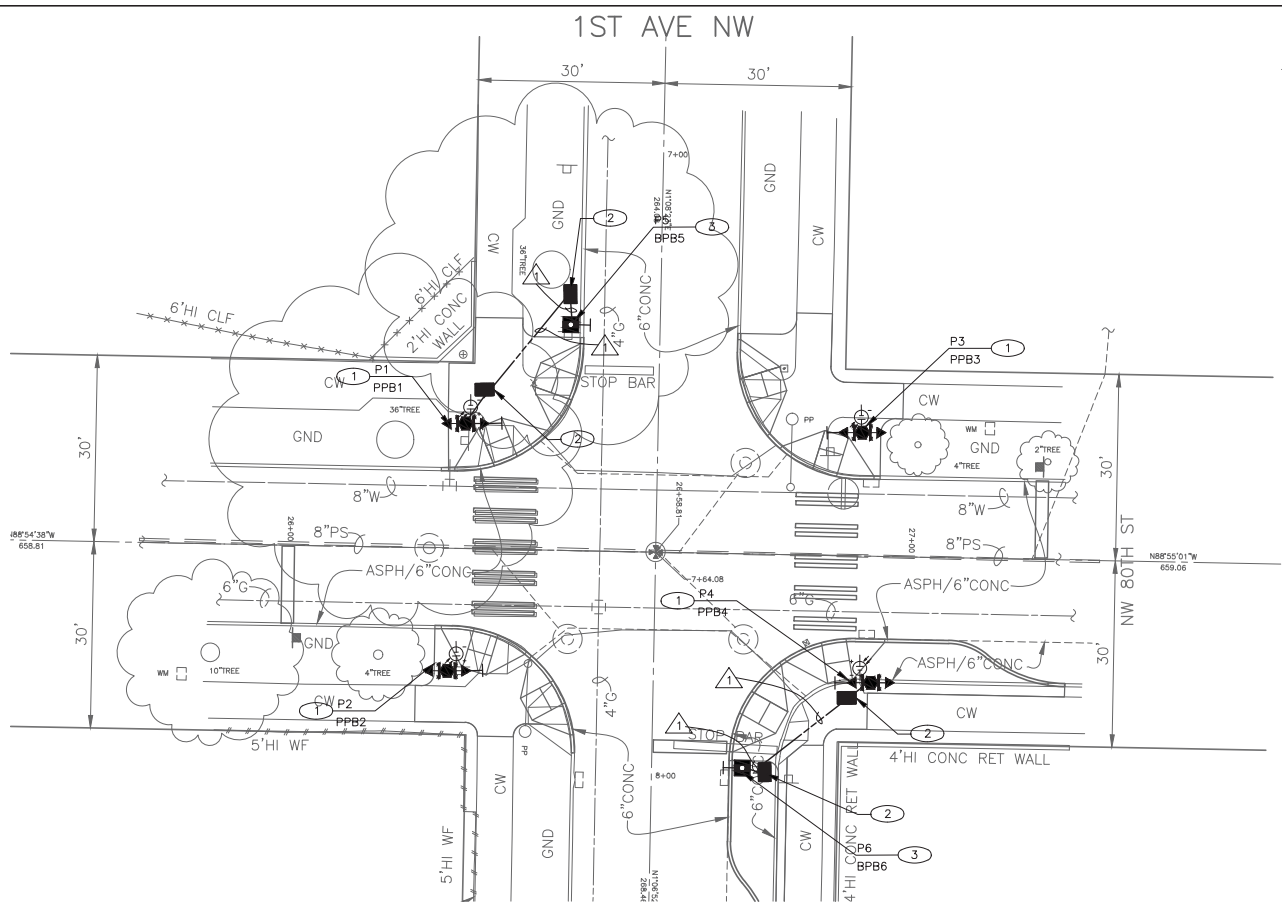

CONSTRUCTION NOTES

1. FURNISH AND INSTALL RECTANGULAR RAPID FLASHING BEACON (RRFB) SOLAR BACK-TO-BACK SYSTEM INCLUDING: POLE, S1-1 AND W16-7PL(R) SIGNS, CONTROL PANEL, PEDESTRIAN PUSHBUTTON WITH R10-25 SIGN, AND SOLAR PANEL. CONTRACTOR SHALL CONNECT ALL REQUIRED WIRES PER MANUFACTURER'S INSTRUCTIONS.
2. FURNISH AND INSTALL TYPE 2 HANDHOLE.
3. FURNISH AND INSTALL ONE PEDESTRIAN PUSHBUTTON POST AND FOUNDATION AND ONE PEDESTRIAN PUSHBUTTON ASSEMBLY PER CITY OF SEATTLE STANDARD PLANS 521 AND 522a. MINIMUM 18" FROM FACE OF CURB.

POLE/PEDESTAL SCHEDULE

POLE NO.	STATION/LOCATION AND OFFSET	POLE TYPE	LENGTH (FT)	FOUNDATION TYPE	MAST ARM LENGTH (FT)	LUMINAIRE ARM LENGTH (FT)	LUMINAIRE WATTAGE	LUMINAIRE MOUNTING HEIGHT (FT)	# OF CABLE OUTLETS	LOCATION OF OUTLETS	CITY LIGHT POLE #
1	7+43.97, RT 29.84'	PEDESTAL	14	PEDESTAL	–	–	–	–	–	–	–
2	7+83.79, RT 31.79'	PEDESTAL	14	PEDESTAL	–	–	–	–	–	–	–
3	7+44.19, LT 32.64'	PEDESTAL	14	PEDESTAL	–	–	–	–	–	–	–
4	7+84.44, LT 33.24'	PEDESTAL	14	PEDESTAL	–	–	–	–	–	–	–
5	7+27.74, RT 13.76'	PPB POST	4.5	PPB POST	–	–	–	–	–	–	–
6	7+98.54, LT 13.96'	PPB POST	4.5	PPB POST	–	–	–	–	–	–	–

NORTH = 0° AZIMUTH

WIRING SCHEDULE

RUN NO	SPAN OR CONDUIT SIZE	RRFB	GROUND	RRFB SERVICE	PPB 1-2C(S)	COMMENTS
1	1-1" TRCD		1-#6		1-2C(S)	

2-5C MULTI-CONDUCTOR CABLE
└ NO. OF CONDUCTORS
└ NO. OF CABLES

(PPB) PUSH BUTTON MOUNTING SCHEDULE

PPB NO.	POLE NO.	LOCATION (AZIMUTH)	PHASE	ARROW DIRECTION
1	1	90	–	LEFT
2	2	90	–	RIGHT
3	3	270	–	RIGHT
4	4	270	–	LEFT

NORTH = 0° AZIMUTH

(BPB) BICYCLE PUSH BUTTON MOUNTING SCHEDULE

BPB NO.	POLE NO.	LOCATION (AZIMUTH)	PHASE	ARROW DIRECTION
5	5	90	–	LEFT
6	6	270	–	LEFT

NORTH = 0° AZIMUTH

LEGEND

- RECTANGULAR RAPID-FLASHING BEACON POLE AND ASSEMBLY
- RECTANGULAR RAPID-FLASHING BEACON AND ASSEMBLY
- PEDESTRIAN PUSHBUTTON
- SOLAR PANEL
- SERVICE DISCONNECT

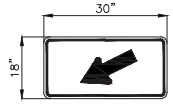

W16-7PL

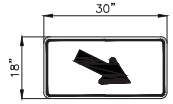

W16-7PR

SIGNS

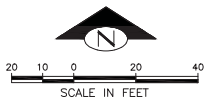

SG1
SIGNALS
NW 80TH ST AND 1ST AVE NW

100% REVIEW
NOT FOR CONSTRUCTION
MARCH 2015

APPROVED FOR ADVERTISING
NANCY LOCKE
DEPARTMENT OF FINANCE & ADMINISTRATIVE SERVICES
SEATTLE, WASHINGTON . . . . . 20 . .
BY: . . . . . .
PURCHASING & CONTRACTING SERVICES DIRECTOR

NAME OR INITIALS AND DATE
DESIGNED PT. . . . . .
CHECKED . . . . . .
DRAWN . . . . . .
CHECKED PT . . . . . .

INITIALS AND DATE
REVIEWED:
DES. . . . . CONST. . . . . .
SDOT . . . . . PROJ. MGR. . . . . .
RECEIVED . . . . . .
REVISED AS BUILT . . . . . .

ALL WORK SHALL BE DONE IN ACCORDANCE WITH THE CITY OF SEATTLE STANDARD PLANS AND SPECIFICATIONS AND OTHER DOCUMENTS CALLED FOR IN SECTION 0-02.3 OF THE PROJECT MANUAL.

STATE OF WASHINGTON 51781 REGISTERED PROFESSIONAL ENGINEER

City of Seattle
Seattle Department of Transportation
ORDINANCE NO. . . . . APPROVED. . . . . .
FUND: . . . . . .
SCALE: H. 1"=20', V. 1"=10' INSPECTOR'S BOOK. . . . . .

2015 SIDEWALK DEVELOPMENT AND SRTS – PACKAGE 4

JOB NO. PC TS6358A R/W CO TS6358C
VAULT PLAN NO. 790-199
SHEET 34 OF 55

VAULT SERIAL NO.	DATE	MARK	NATURE REVISIONS	MADE	CHK'D	REV'D
36370						

P:\STDrafter\2015 Sidewalks SRTS Program\Trim-CPRS\NW 80TH SVA_PLOT FILES\TS6003A-P-SIGL-NW 80TH ST AND 1ST AVE NW.dwg
Mar-12-15 9:24am

REGION NO.	STATE	FEDERAL AID PROJECT NO.	SHEET NO.
10	WA	SRTS-1730(001)	35

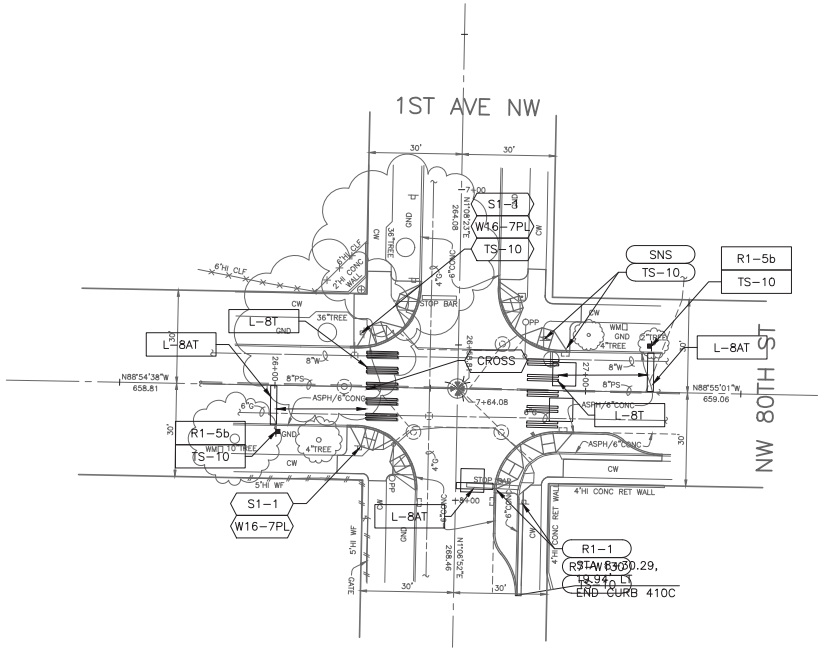

CHANNELIZATION LEGEND

L-8T	THERMOPLASTIC 8" CROSSWALK. SEE STD PLAN 712 FOR SPACING AND ADDITIONAL DETAILS.
L-8AT	THERMOPLASTIC 16" STOPLINE.
L-9A	YIELD LINE

INSTALL

REMOVE

SIGN LEGEND

CROSS	OVERHEAD CROSSING SIGN
R1-5b	STOP HERE FOR PEDS
S1-1	SCHOOL CROSSING
SNS	STREET NAME SIGN
W16-7P	LEFT-DOWN ARROW
▯	MAILBOX
⊥	SIGN

N

20 10 0 20 40

SCALE IN FEET

CH1

CHANNELIZATION AND SIGNING

NW 80TH ST AND 1ST AVE NW

VAULT SERIAL NO.	DATE	MARK	NATURE	MADE BY	CHK'D	REV'D
36370			REVISIONS			

P:\STDrafter\2015 Sidewalks SRTS Program\Trim-GPRS\NW 80TH SVA_PLOT FILES\TS6003A-P-CHAN-NW 80TH ST AND 1ST AVE NW.dwg
Mar-12-15 8:26am

100% REVIEW
NOT FOR CONSTRUCTION
MARCH 2015

APPROVED FOR ADVERTISING
NANCY LOCKE
DEPARTMENT OF FINANCE & ADMINISTRATIVE SERVICES
SEATTLE, WASHINGTON . . . . . 20 . .
BY: . . . . . .
PURCHASING & CONTRACTING SERVICES DIRECTOR

NAME OR INITIALS AND DATE
DESIGNED .PT. . . . . .
CHECKED . . . . . .
DRAWN . . . . . .
CHECKED .PT . . . . . .

INITIALS AND DATE
REVIEWED:
DES. . . . . CONST. . . . . .
SDOT . . . . . PROJ. MGR. . . . .
RECEIVED . . . . . .
REVISED AS BUILT . . . . . .
ALL WORK SHALL BE DONE IN ACCORDANCE WITH THE CITY OF SEATTLE STANDARD PLANS AND SPECIFICATIONS AND OTHER DOCUMENTS CALLED FOR IN SECTION 0-02.3 OF THE PROJECT MANUAL.

STATE OF WASHINGTON 51781 REGISTERED PROFESSIONAL ENGINEER

City of Seattle
Seattle Department of Transportation
ORDINANCE NO. . . . . APPROVED. . . . . .
FUND: . . . . . .
SCALE: H. 1"=20', V. 1"=10' INSPECTOR'S BOOK . . . . . .

2015 SIDEWALK DEVELOPMENT AND SRTS – PACKAGE 4

JOB NO. PC TS6358A R/W CO TS6358C
VAULT PLAN NO. 790-199
SHEET 35 OF 55