SOUTH LANDER STREET GRADE SEPARATION PROJECT

Bridge and Structures Type, Size and Location Memorandum

Prepared for:

City of Seattle
Department of Transportation

Prepared by:

kpff Consulting Engineers
1601 Fifth Avenue, Suite 1600
Seattle, WA 98101

KPFF Project No. 106531.41

August 29, 2007

Table of Contents

Page

1. Executive Summary 1
   - Background 1
   - Project Description 1
   - Project Purpose and Goal 1
   - Bridge Alternatives 1
   - Alternatives Evaluation and Recommendation 2
2. Introduction 3
3. Design Criteria 5
   - Design Codes 5
   - Materials 5
   - Design Loading 5
   - Superstructure Deflection Control 5
4. Project Constraints 5
   - Rail Clearances 5
   - Roadway Constraints 5
   - Existing Utility Constraints 5
5. Geotechnical Parameters 5
6. Structural Alternatives 5
   - Structure Layout 5
   - Superstructure Type 5
   - Substructure Type 5
   - Approach System 5
7. Cost Analysis 5
8. Alternative Evaluation and Recommendation 5
   - Alternative Evaluation 5

Appendices

Appendix A –Existing Utilities
Appendix B – Bridge Layouts
Appendix C – Bridge Typical Sections
Appendix D – Cost Estimates

This page left intentionally blank

1. Executive Summary

Background

A freight mobility and economic strategy for the Duwamish area was previously developed and summarized in the *Access Duwamish Report* published in 2000. The summary report recommended a series of projects that would separate railroad tracks from street crossings. The intent of the proposed grade separations is to improve safety and reduce vehicular delays caused by increasing rail traffic at the existing at-grade crossings.

Project Description

The South Lander Street Grade Separation is one project recommended in the Access Duwamish Report. The project will grade separate South Lander Street and the Burlington Northern Santa Fe (BNSF) tracks between Occidental Avenue South and Third Avenue South. The limits of the structure, including approaches, are from First Avenue South to Third Avenue South. Heading east, the structure rises from First Avenue South attaining the required vertical clearances over the relocated Occidental Avenue South and the four existing and two future BNSF tracks. As the roadway crosses the BNSF tracks, it descends to meet Third Avenue South.

Project Purpose and Goal

The purpose of this Memorandum is to update the previous South Lander Street Grade Separation type, size, and location (TS&L) study conducted in 2003. Since the earlier study, new site constraints and conditions have been established that require a re-examination and re-evaluation of the bridge overcrossing alternatives. Two significant changes made to the project constraints include:

- Increased bridge width from 62 feet to 84 feet.
- Updated soil parameters indicating a thicker fill layer than original thought, requiring deeper foundations to reach a competent layer suitable to support the structure.

To determine a cost effective solution meeting the project constraints, this TS&L defines a preferred alternative for the bridge overcrossing of the BNSF tracks.

Bridge Alternatives

Each bridge alternative is divided into four major components. The components are structure layout, superstructure type, substructure type, and approach system. The alternative evaluation studied four structure layouts, six superstructure types, three substructure types, and several approach systems.

Structure Layout
The key to determining the structural layout of the bridge is balancing the span lengths with the resulting superstructure depths and foundation loads. The superstructure depth along with the required vertical clearances over the BNSF tracks and Occidental Avenue South are critical components in establishing the grade of the bridge. The foundation loading is important due to poor soil conditions in the area. Layouts with five to seven spans were studied.

Superstructure Type
The required vertical clearance over the BNSF tracks, in combination with the 7 percent maximum allowable grade, drove a need for a superstructure that could accommodate the required span distances while providing a minimum structure depth. Precast concrete girders, steel plate girders, and multi-cell concrete box girders were evaluated as part of this study.

Substructure Type
The substructure type study maximizes the load carrying capacity of the foundation while minimizing the foundation footprint. The goal was to maximize the clear distance to the existing utilities to ensure that proposed foundation does not adversely effect the existing utilities. The thick fill layer at the surface of the project site requires the use of deep foundations. Both pile and shaft foundations were studied. The limited right-of-way and the existing utilities precluded the use of a pile foundation; because of the large footprint required for the pile groups and concerns that the vibration caused by pile driving could impact the utilities.

Two basic shaft arrangements were researched. The first proposes a single line of four shafts stretching across the width of the structure. The second arrangement groups two shafts on each side of the structure. The single line option requires a shaft to be installed between the 90-inch and 96-inch utilities, while the grouping option requires shaft to be installed only near the exterior of the 96-inch utility.

Approach System
Based on geotechnical information, it was determined that the soils below the proposed approaches could not support additional load from soil fill without undergoing significant settlement. Therefore, alternative methods were considered for the approaches, including expanded polystyrene fill, lightweight concrete fill, and structural approaches.

Alternatives Evaluation and Recommendation

The bridge alternatives were evaluated and a preferred alternative was selected using the following parameters:

- Vertical and horizontal clearances to BNSF tracks
- Vertical and horizontal clearances to Occidental Avenue South
- Raise in grade at First Avenue South and Third Avenue South
- Proximity of and clearance to existing utilities
- Estimated costs
- Constructability

Over the course of this investigation, a six span (116 feet, 116 feet, 116 feet, 105 feet, 105 feet, 105 feet) bridge was selected as the preferred option. The superstructure consists of 11 WF50G prestressed concrete girders supported on multicolumn piers and drilled shaft foundations. The preferred approach option makes use of hollow box structures. The anticipated cost of this structure, including approaches, is approximately $35,870,000.

2. Introduction

South Lander Street is located in the North Duwamish industrial area and is heavily used by freight and commuter traffic. South Lander Street currently intersects a group of BNSF tracks at an at-grade crossing located between Occidental Avenue and Third Avenue. The at-grade crossing contributes to daily vehicular delays impacting freight as well as the general public. Therefore, to increase safety and improve mobility in this area, a freight mobility and economic strategy was developed for the Duwamish area. The strategy is summarized in the Access Duwamish Report, published in 2000. The report recommended a series of projects that grade separate the BNSF railroad tracks from street crossings. The South Lander Street Grade Separation is one of the recommended projects in the Access Duwamish Report. An overcrossing at South Lander Street will eliminate vehicular delay at this location, in turn improving air quality. A grade separated crossing will also benefit rail operations and safety by providing longer distance between at-grade crossings. The purpose of the South Lander Street Grade Separation Project is to provide a bridge that spans the BNSF railroad tracks located between First Avenue South and Third Avenue South. A key requirement is to provide the necessary vertical clearance over the railroad tracks while maintaining the intersections at First Avenue South and Third Avenue South. An aerial photograph of the project site is shown in Figure 1.

The current TS&L Memorandum builds on an earlier TS&L study conducted in 2003. Since the 2003 study, new project objectives, goals, and constraints have been established that require a new look at bridge alternatives for the South Lander Street grade separation. Two significant changes from the original TS&L relate to the bridge structure width and the geotechnical parameters for the site.

The previous TS&L evaluated a structure with a roadway channelization consisting of two 14-foot lanes, two 12-foot lanes, and a single 10-foot sidewalk on the north side of the structure, resulting in a total width of 62 feet. The new channelization includes three 12-foot lanes, two 11-foot lanes, two 5-foot bike lanes, and two 8-foot sidewalks, resulting in a total width of 84 feet. This change increases the overall structure width by 22 feet (or 35 percent) from the structure studied in the original TS&L.

Critical to the evaluation of bridge alternatives is the selection of an appropriate bridge foundation. During the 2003 TS&L study, geotechnical information regarding the existing soil conditions was extrapolated from the soils report prepared for the South Lander Street Combined Sewer Overflow project in 1989. As part of the current study, additional geotechnical exploration was performed. The resulting subsurface information has identified site conditions significantly different than those shown for the South Lander Street Combined Sewer Overflow project. Instead of the upper boundary of the medium dense to dense alluvial deposits located 30 feet below-grade; they are located at depths up to 110 feet. The new geotechnical information indicates a need for foundations that are deeper than initially expected during the original TS&L.

The following sections of this report summarize the project design criteria, project constraints, geotechnical parameters, structural alternatives, cost analysis, and alternative evaluation.

This page left intentionally blank

DRAFT

VAULT/SWD SER. NO	DATE	MARK	NATURE	MADE	CHK'D	REV'D
			REVISIONS			

kpff Consulting Engineers
1201 Third Avenue, Suite 900
Seattle, Washington 98101
(206) 622-5822 Fax (206) 622-8130

S LANDER STREET GRADE SEPARATION

FIGURE 1

N

GRAPHIC SCALE

0 50 100 200

1 inch = 100 ft.

This page left intentionally blank

3. Design Criteria

Design Codes

- AASHTO, *LRFD Bridge Design Specifications, Customary U.S. Units,* 4th Edition, 2007.
- Washington State Department of Transportation (WSDOT), *Bridge Design Manual LRFD (M23-50)*, 2006 including updates and Design Memorandums.
- Standards and References AREMA, *Manual for Railway Engineering*, 2007.
- Burlington Northern Santa Fe, *Design Guidelines for Industrial Track Projects*, 2004.
- Burlington Northern Santa Fe Railway and Union Pacific Railroad, *Guidelines for Railroad Grade Separation Projects*, 2007.
- City of Seattle, *Standard Specifications for Road, Bridge, and Municipal Construction*, 2007.
- City of Seattle, *Right-of-Way Improvements Manual, 2005*.
- KPFF Consulting Engineers, *South Lander Street Grade Separation Project: Channelization Memorandum*, 2007.
- KPFF Consulting Engineers, *S. Lander Street Grade Separation TS&L*, 2003.
- Shannon & Wilson, *Draft Geotechnical Engineering Report: South Lander Grade Separation Project*, 2007.
- WSDOT, *Design Manual (M22-01)*, 2007 including updates.
- WSDOT, *Standard Specifications for Road, Bridge, and Municipal Construction (M41-10)*, 2006 including amendments.

Materials

- As specified in City of Seattle, *Standard Specifications for Road, Bridge, and Municipal Construction*, 2007.

Design Loading

- Dead Load
  - WSDOT BDM 3.1.1 and AASHTO 3.5
  - Weight of structural components, attachments and utilities attached to the bridge
  - Reinforced concrete weight: 160 pcf
  - Future wearing surface: 25 psf
- Live Load
  - WSDOT BDM 3.1.2 and AASHTO 3.6
  - Design vehicle: HL-93
  - Sidewalk pedestrian loading: 0.075 ksf

- Wind Load
  - AASHTO 3.8
  - Base wind velocity: 100 mph (assumed)
- Earthquake
  - AASHTO 3.10
  - Acceleration coefficient, A: 0.34
  - Importance coefficient, IC: Other
  - Seismic performance zone: 4
  - Soil profile type: III
  - Site coefficient: 1.5
  - Live load factor for Extreme Event-I Limit State, γ_{EQ}: 0.50
  - Recommended response spectrum provided by Shannon & Wilson in *Draft Geotechnical Engineering Report: South Lander Grade Separation Project*, 2007.
- Thermal/Shrinkage Movement
  - Concrete bridge temperature range: 0 degrees F to 100 degrees F
  - Steel bridge temperature range: 0 degrees F to 120 degrees F
  - Normal installation temperature: 64 degrees F
  - Concrete coefficient of thermal expansion: 0.000006 in./in./°F
  - Steel coefficient of thermal expansion: 0.0000065 in./in./°F

Superstructure Deflection Control

Live load deflection < span length/1000.

4. Project Constraints

Rail Clearances

- Railroad Track Horizontal Clearance.
  - Without pier protection: 25 feet from the track centerline to the nearest pier or abutment for all tracks.
  - With pier protection: Piers or abutments located within 25 feet of a track centerline, with an absolute minimum horizontal clearance of 18 feet, require pier protection as specified in *Guidelines for Railroad Grade Separation Projects*, 2007.
- Railroad Track Vertical Clearance.
  - 23.5 feet from top of rail to bottom of structure for all BNSF tracks.
  - 22.5 feet from top of rail to bottom of structure for future Amtrak track.
  - Vertical clearance is provided for the width of the railroad freight car and not for the entire horizontal clear zone.

- See Figure 2 for required railroad clearance envelope.

Roadway Constraints

- Roadway Vertical Clearance.
  - Occidental Avenue South below the proposed structure: 16.5 feet from top of roadway to bottom of structure. See Figure 2.
  - Vertical clearance above South Lander Street: 20.5 feet from roadway to bottom of any structure.
- Roadway Channelization Configuration.
  - 84-feet wide (from face of barrier to face of barrier) with two 8-foot wide sidewalks, two 5-foot wide bike lane, three 12-foot wide lanes, and two 11-foot wide lanes.
  - 1 percent cross slope crowned at centerline of bridge.
  - 7 percent maximum allowable grade.
  - Minimize increase in grade at intersections of South Lander Street and First Avenue South and Third Avenue South.
- Access Provided Below Structure for Railway/Roadway.
  - Railway: provide an approximately 109-foot wide opening to allow for four existing BNSF tracks, one proposed BNSF track, one Amtrak track (spaced @ 15 feet, 14 feet, 14 feet, 15 feet, and 15 feet), and two 18-foot clear zones.
  - Occidental Avenue South: Provide an approximately 90-foot wide opening to allow for the re-channelization of Occidental Avenue South.

Existing Utility Constraints

- Stormwater
  - 90-inch storm sewer located on the centerline of the project.
  - A 3 feet minimum clearance is required between existing utilities and any bridge foundation that makes use of driven piles. The 3 foot minimum clear distance does not apply to drilled shafts or drilled casings.
  - Drilled shaft foundations must remain outside the original trench used to install the utilities. Trenches are typically cut 2 feet wider (on each side) than the utility being installed but this dimension must be verified from original drawings. This requirement only applies to the portion of the foundation that will remain in place permanently.
  - Assume allowable settlement is limited to 0.5 inch.
  - The 90-inch storm sewer will remain in place.
  - See Appendix A for additional information.
- Sanitary Sewer
  - 96-inch sanitary sewer located 17 feet south of the project centerline.
  - A 3 feet minimum clearance is required between existing utilities and any bridge foundation that makes use of driven piles. The 3 feet minimum clear distance does not apply to drilled shafts or drilled casings.

    - Drilled shaft foundations must remain outside the original trench used to install the utilities. Trenches are typically cut 2 feet wider (on each side) than the utility being installed but this dimension must be verified from original drawings. This requirement only applies to the portion of the foundation that will remain in place permanently.
    - Assume allowable settlement is limited to 0.5 inch.
    - The 96-inch sanitary sewer will remain in place.
    - See Appendix A for additional information.
- Natural Gas
    - 4-inch natural gas.
    - To be relocated.
- Water
    - 16-inch cast-in-place waterline 21.5 feet north of project centerline.
    - To be relocated.

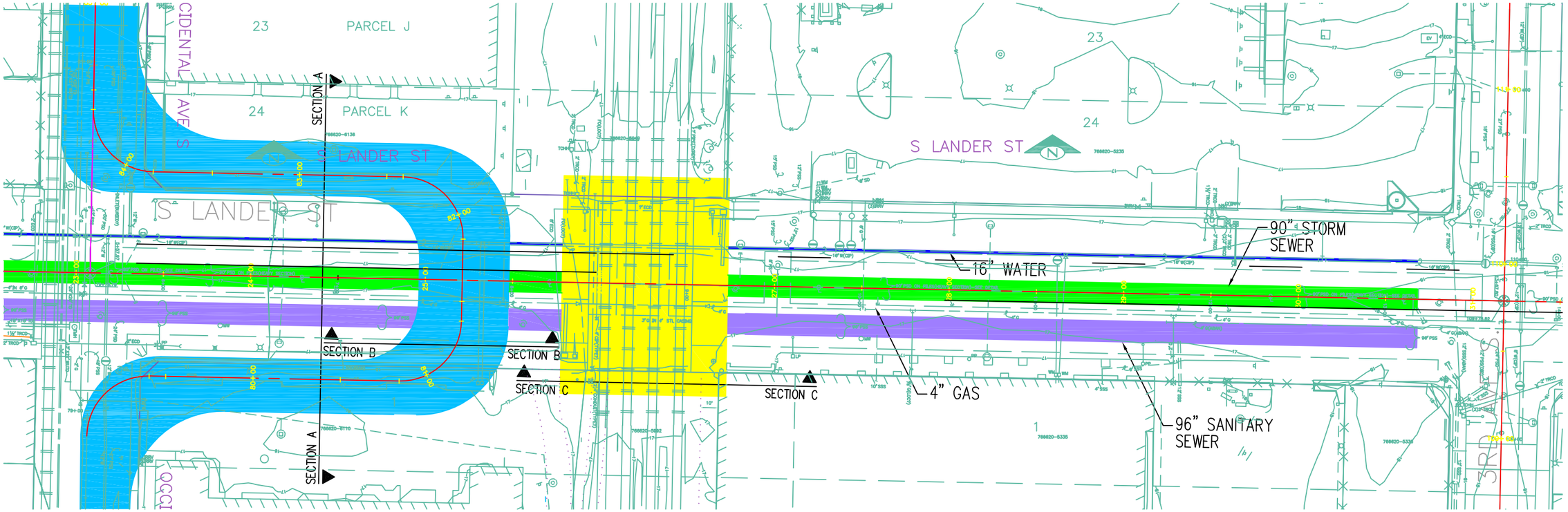

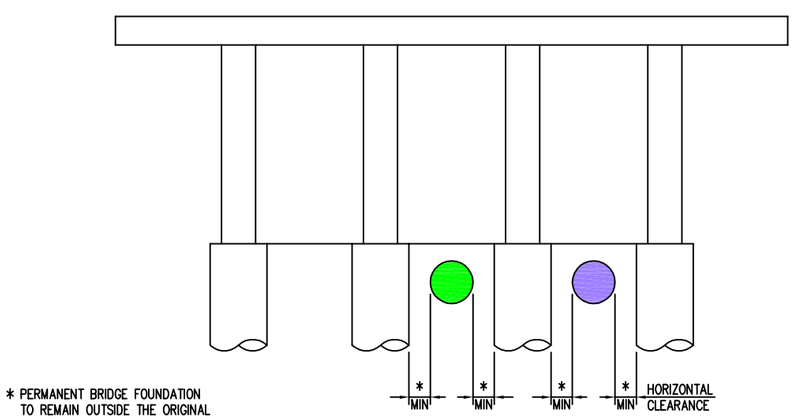

SECTION A

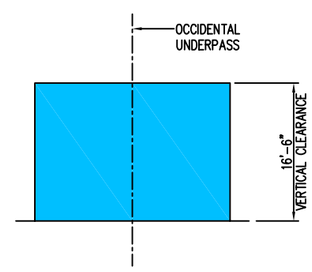

SECTION B

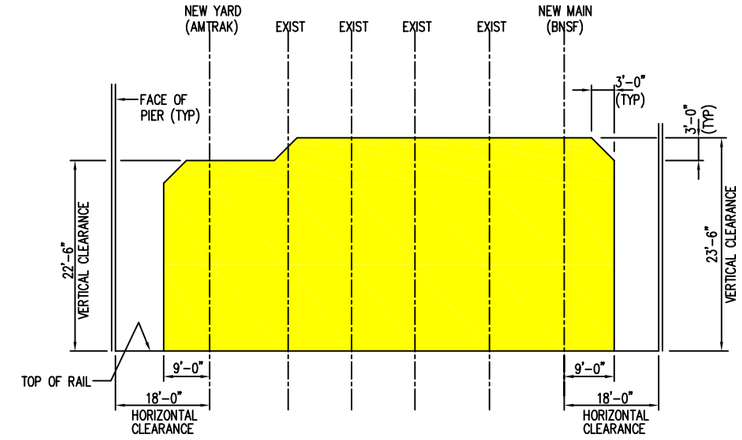

SECTION C

DRAFT

VAULT/SWD SER. NO	DATE	MARK	NATURE REVISIONS	MADE	CHK'D	REV'D

CAD USER: RickT PLOT DATE: Aug 27, 2007-02:00pm
PATH: V:\106531 (South Lander St)\Design\FIGURES\Constraint PLan.dwg

kpff Consulting Engineers
1601 Fifth Avenue, Suite 1600
Seattle, Washington 98101
(206) 622-5822 Fax (206) 622-8130

City of Seattle
Seattle Department of Transportation

S LANDER STREET GRADE SEPARATION

CONSTRAINT PLAN

This page left intentionally blank

5. Geotechnical Parameters

The geotechnical explorations program consisted of drilling three borings to approximate depths ranging from 190 to 196 feet below-ground surface (bgs), and pushing three CPT probes to depths ranging between 100 and 181 feet bgs. Subsurface information obtained from the field exploration program was supplemented by existing subsurface information collected from previous projects completed in the vicinity of project area.

The project site is underlain by fill that extend to depths of about 170 feet to nearly 190 feet bgs. A 40- to 51-foot thick layer of medium dense to dense soil was encountered at approximate depths ranging from 87 to 107 feet bgs. Below this layer of denser material there is a 30- to 45-foot thick layer of compressible deposits. Groundwater was measured at depths approximately 7 feet bgs in observation wells installed in the field explorations. In response to precipitation, groundwater level may fluctuate 1 foot higher and 3 feet lower than the levels measured to date in the wells.

The very loose to medium dense sand of the alluvial soils are susceptible to liquefaction during a design earthquake having a recurrence interval of 475 years. Per the WSDOT Geotechnical Design Manual, liquefaction potential for the extreme limit state was not considered below a depth of 80 feet bgs. Liquefaction mitigation measures may be required to minimize ground settlement beneath the new approach fill embankments and the existing utilities and to improve the stability of the embankments during the design seismic event. Earthquake drains and compaction grouting are a possible alternative that could be considered to mitigate the liquefaction potential beneath the approach fill embankments. Selection of the more feasible method, if any, would depend on the approach fill embankments type and height, and the resulting static ground settlement impacting the existing utilities.

Shallow foundations are not recommended to support the bridge structure because of the loose/soft nature of the soils underlying the project alignment and their susceptibility to liquefaction. Due to the impact of vibration-induced settlements on existing utilities and structures, driven piles are not appropriate as deep foundation option for this project. It is recommended that the proposed grade separation bridge structure be supported on drilled shafts.

The weight of the new approach fill embankments will cause ground settlements along the project alignment. These settlements may have adverse impact on existing utilities underlying the site. The amount of settlement is dependent of the stiffness of the underlying soils and the weight of the embankment. Settlements have been estimated for four cases: (a) structural fill without ground improvement, (b) structural fill with compaction grouting, (c) expanded polystyrene (EPS) without ground improvement, and (d) lightweight concrete without ground improvement. The estimated maximum total settlements for these four cases are about 12, 6, 1.75, and 3 inches, respectively.

In addition, stability analyses were performed for structural fill approach embankments under static and seismic loading conditions and with and without ground improvement. Results of the analyses show factor-of-safety of 1.8 under static condition and 0.5 under seismic condition.

To screen for potential contamination and appropriate disposal of soil collected during drilling, selected soil and groundwater samples were collected during the field explorations for analytical testing. These samples were tested for petroleum, volatile organic compounds (VOCs), polynuclear aromatic hydrocarbons (PAHs), metals and/or polychlorinated biphenyls (PCBs). Based on sampling and analytical testing, chromium was detected above state background levels in one soil sample and gasoline and PAHs were detected above regulatory criteria in another soil sample. Also, elevated arsenic and naphthalene were detected in the groundwater.

The likely source of the metals and PAH contamination is creosote-coated timber piles. The petroleum, however, likely resulted from a release at a nearby property. It is possible that contaminated soil and groundwater would be encountered in excavations at the project site, which will require special handling and disposal. It is recommended that the soils be segregated and tested for potential contamination to evaluate for potential disposal at a permitted facility or re-use on site or at an industrial/commercial property. Groundwater removed during excavation dewatering, if required, should be stored in a holding tank, sampled, and treated as appropriate to meet discharge permit requirements. If remediation of soil and groundwater is required, chemical oxidation and/or enhanced bioremediation could be employed to treat the petroleum and PAHs. However, to treat the arsenic in the groundwater, pump-and-treat and ex-situ activated carbon treatment is likely the only remedial technology to be effective. These measures could be employed post-construction.

6. Structural Alternatives

The objective of this study is to determine the most efficient system to span the BNSF tracks while adhering to all of the project constraints. The major components evaluated during the study are discussed below and include: structure layout, substructure type, superstructure type, and approach system. Four structure layouts, three substructure types, six superstructure types, and three approach systems were considered.

Structure Layout

Because of poor soils at the project site, foundation capacity was a major consideration when determining the bridge layout. Typically, shorter spans result in lighter foundation loads, but at higher costs due to the increased number of foundations. To envelop the range of probable foundation loads, span lengths from 85 to116 feet were studied in various combinations.

Another consideration was horizontal clearances to the BNSF tracks. Initially, a 25-foot horizontal clearance was proposed on either side of the BNSF tracks with the future Amtrak line being tucked within the 25-foot horizontal clearance. This produced a minimum span over the tracks of 115 feet. Later, it was decided that a minimum horizontal clearance of 18 feet be provided to both the BNSF and Amtrak tracks. This increased the minimum span by one foot to 116 feet. See Figure 2 for the clearance layout.

The need to provide adequate vertical clearance over the BNSF tracks while minimizing the increase in grade at Third Avenue South made it imperative to optimize the superstructure layout while minimizing the superstructure depth.

The abutment locations were selected to provide a minimum clearance of 5 feet between the bottom of the proposed girders and the finished grade. This distance provides access for inspections and future maintenance.

The following four layouts were considered during this study:

Layout 1: 685-feet long, seven spans (70 feet, 100 feet, 100 feet, 115 feet, 100 feet, 100 feet, 100 feet)

Layout 2: 625-feet long, seven spans (85 feet, 85 feet, 85 feet, 115 feet, 85 feet, 85 feet, 85 feet)

Layout 3: 575-feet long, five spans (115 feet, 115 feet, 115 feet, 115 feet, 115 feet)

Layout 4: 663-feet long, six spans (116 feet, 116 feet, 116 feet, 105 feet, 105 feet, 105 feet)

See Appendix B for plan and elevations of each of the span layouts.

Superstructure Type

The superstructure selection was driven by the structures ability to provide adequate clearance above the railroad tracks and Occidental Avenue South, while maintaining a maximum vertical grade of 7 percent. Superstructure types that most efficiently meet both these vertical requirements and the span lengths selected in the structural layout are precast concrete girders, steel plate girders, and multi-cell box girders.

The following superstructure typical sections were considered and are shown in Appendix C.

- Precast Concrete Girders
  - (17) WF42G Girders @ 5' spacing on center
  - (11) WF50G Girders @ 7'-10" spacing on center
- Steel Plate Girders
  - (11) 36-inche Deep Girders @ 7'-10" spacing on center
  - (10) 42-inch Deep Girders @ 8'-8" spacing on center
  - (9) 48-inch Deep Girders @ 9'-6" spacing on center
- Multi-Cell, Prestressed Concrete Box Girder
  - (12) Webs @ 7'-2" spacing on center

Substructure Type

The deep fill layer (over 100 feet in depth at some locations) found at the project site, along with the potential for liquefaction in the top 80 feet of soil during a seismic event led to the recommendation to use deep foundations.

Pile foundations and drilled shafts were considered for the bridge foundations. Use of piles could potentially result in vibration induced settlement or damage to the existing utilities during pile driving. Also, the required pile group could extend outside the required available right-of-way. With the limited right-of-way and existing utilities near the surface, it was determined that pile foundations were not a suitable option. Therefore, piles were eliminated and drilled shafts advanced for additional analysis in the study.

Two basic shaft arrangements were researched. The first proposes a single line of four shafts placed across the width of the structure, each supporting a single column in a multicolumn pier (see Figure 3). The second arrangement groups two shafts on each side of the structure and supports a grade beam with columns or wall pier grade beam with columns (see Figures 4 and 5). The single line option requires a shaft to be installed between the 90-inch and 96-inch utilities, while the grouping option requires shafts to be installed only to the exterior of the 96-inch utility.

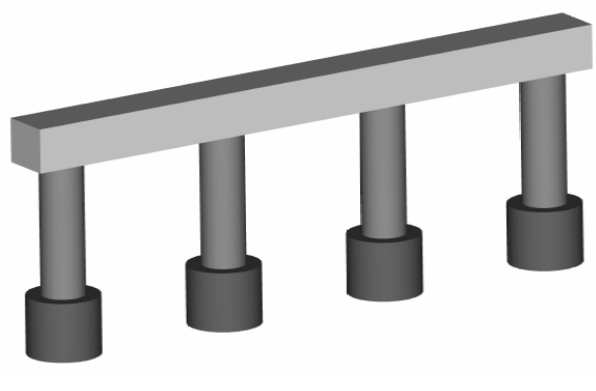

Figure 3 – Typical Multicolumn Pier

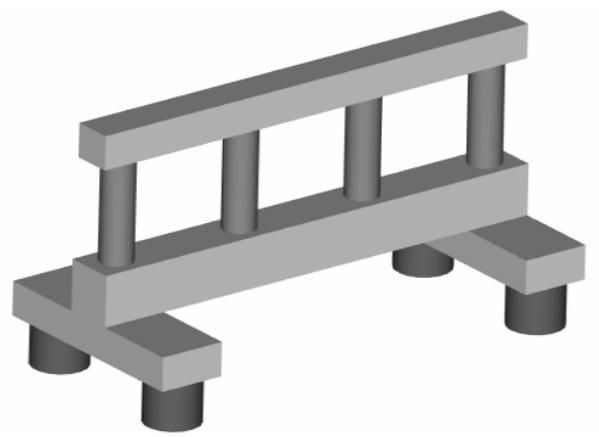

Figure 4 – Typical Grade Beam Pier

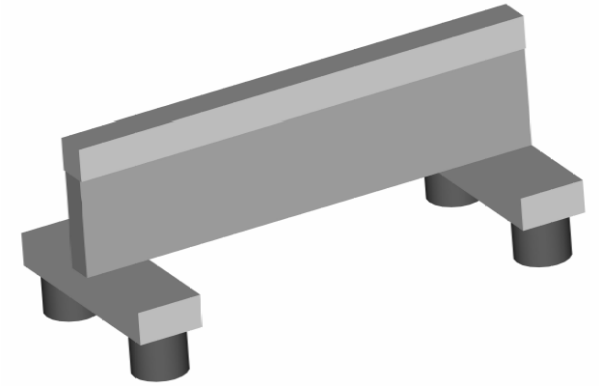

Figure 5 – Typical Wall Pier

Approach System

The approaches to the structure were originally envisioned as common fill approaches that make use of mechanically stabilized earth (MSE) retaining walls to confine the fill. Because of the poor soils at the project location, a geotechnical evaluation of the soils below the proposed approaches was undertaken. This evaluation indicated that the soils below the proposed approaches could not support the additional load without undergoing undesirable settlement. This settlement (summarized in the *Draft Geotechnical Engineering Report: South Lander Grade Separation Project*, 2007) would result in significant damage to the existing utilities.

To eliminate the settlement resulting from conventional fill, alternative approaches were considered. First considered were geotechnical means to reduce the settlement. These included compaction grouting, expanded polystyrene fill, and lightweight concrete fill. Geotechnical analyses found that these mitigation measures would not reduce the settlement enough to ensure the safety of the existing utilities.

Additional approach alternatives considered make use of structures founded on small diameter drilled shafts or auger cast concrete piles. The first option makes use of fill supported by structure. The structure is a flat concrete slab founded on auger cast piles. The slab protects the existing utilities by supporting the soil fill and span over the existing utilities. A geotechnical analysis determined that the settlement of the slab was larger than acceptable limits. This a direct result of the large load demands on the auger cast piles, and as a result of the almost 12 feet of fill supported on by the slab. Due to the unacceptable settlements, the protection slab option was removed from further consideration.

The second option makes use of a hollow box approach founded on auger cast piles. This option is significantly lighter than the protection slab option and results in less demand on the piles. This should keep settlement within an acceptable range. Figure 6 shows a section of the proposed hollow box approach.

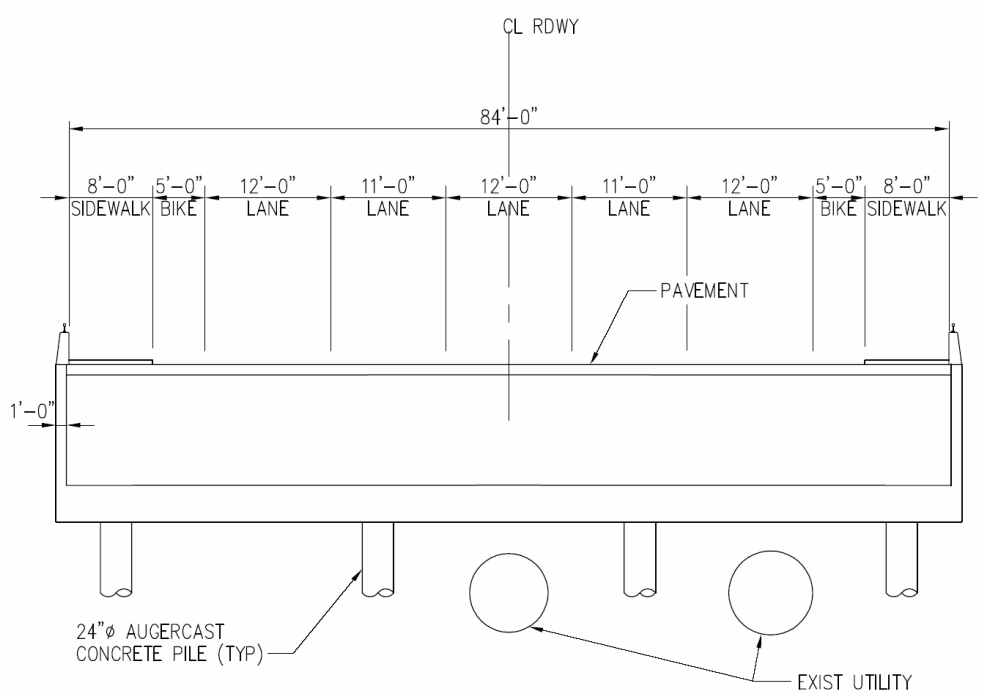

Figure 6 – Approach Section

7. Cost Analysis

Cost estimates were developed for each of the bridge options. Costs are based on multicolumn intermediate piers and hollow box approach structures. See "Alternative Evaluation" for reasoning behind selection of these options for cost estimate. All costs include supplying and installing materials listed for each item. Table 1 provides a summary of cost estimates while Appendix D provides detailed cost estimates for each option.

Table 1: Cost Estimate Summary

Layout	36 in. Web	42 in. Web	48 in. Web	WF42G	WF50G	Conc. Box
1	$54,160,000	$48,650,000	$46,760,000	$39,220,000	$37,920,000	*
2	$54,470,000	$49,450,000	$47,650,000	$40,830,000	$39,640,000	*
3	$49,440,000	$44,780,000	$43,170,000	$36,910,000	$35,820,000	$37,410,000
4	**	$45,430,000	**	**	$35,870,000	**

* Not applicable for short span length.
** Based on cost estimates for the original three layout options, one steel option and one concrete option were selected for consideration when clearance at the railroad tracks was updated.

The bridge superstructure estimate includes the following items:

- Concrete and reinforcing steel for the concrete deck slab and sidewalk.
- Steel or concrete girders.
- Concrete box sections.
- Pedestrian barrier, railing, and fence.
- Expansion joints.
- Bridge drains.
- Elastomeric bearing pads.

The bridge substructure estimate includes the following items:

- Concrete and reinforcing steel for columns, pier caps, and abutment walls.

The bridge foundation estimate includes the following items:

- Excavation to expose existing utilities and to install drilled shafts.
- Shoring to protect existing utilities.
- Providing and installing drilled shafts.

The bridge approach estimate includes the following items:

- Pedestrian barrier and railing.
- Providing and installing auger cast piles.
- Concrete and reinforcing steel for a hollow box approach structures.

The retaining walls estimate includes the following items:

- Pedestrian barrier and railing.
- Concrete and reinforcing steel for retaining walls and footings.

Costs that have not been included in the estimates are as follows:

- Sales tax.
- Construction engineering and inspection.
- Costs associated with multi-phase construction to accommodate traffic through the construction zone. It is assumed that South Lander Street will be closed from First Avenue South to Third Avenue South.
- Removal of contaminated soil.
- Bridge railroad flagging and protection including a flag person for the duration of work near the tracks.
- Utility relocations.
- Civil items such as:
    - Site preparation.
    - Clearing and grubbing.
    - Removal of sidewalks, curb, gutter and pavement.
    - Storm drainage and conveyance.
    - At-grade pavement.
    - Landscaping.
    - Traffic control.
    - At-grade crossings for emergency services.
    - Signage.

8. Alternative Evaluation and Recommendation

Alternative Evaluation

Bridge alternatives were evaluated using the following criteria:

- Vertical and horizontal clearances to BNSF tracks
- Vertical and horizontal clearances to Occidental Avenue South
- Raise in grade at 1st Avenue South and Third Avenue South
- Proximity of and clearance to existing utilities
- Estimated costs
- Constructability

Opportunities and challenges associated with each of the alternatives are presented below.

Structure Layout
Layout 4 using 6 spans totaling 663 feet is the recommended structure layout. Though this layout has the longest spans of all the options and consequently the highest foundation loads, it was determined that the proposed foundations have the capacity to support the structure.

The advantage of Layout 4 is the minimization of the total number of foundations. The shorter spans and lighter foundation loads of Layouts 1 and 2 provided no cost savings over span Layout 4 due to the increased number of foundations. Layout 2 was also deemed not feasible because it does not provide adequate horizontal clearance for Occidental Avenue South.

Superstructure Type
The concrete precast girder superstructure alternatives have a large cost benefit over the steel or box girder type superstructures. The precast concrete girder superstructure was at least half the cost of the steel options due to the material and long-term maintenance cost differences. The concrete precast girder superstructures also were less than the box girder option predominantly due to the additional cost for cast-in-place concrete construction especially over the railroad tracks. Use of cast-in-place superstructures is discouraged per *Guidelines for Railroad Grade Separation Projects,* 2007.

Substructure Type
Multicolumn piers supported on drilled shafts are the recommended alternative for the substructures of the bridge. They are the most cost-effective and aesthetically pleasing alternative.

Shallow foundations such as spread footings were not an option due to poor soil conditions. Deep foundations studied include driven piles and drilled shafts. Piles were eliminated due to the possibility of vibration-induced damage to the existing utilities and the need to go beyond the right-of-way for the placement of the pile groups. Consequently, drilled shafts are the recommended foundation.

The next decision was the type of substructure to support on the drilled shafts. Alternatives studied include wall piers and multicolumn piers. Wall piers allowed the drilled shafts to be installed further away from the existing utilities, but were less desirable do to their cost and obstruction of sight distance. Once it was determined that drilled shafts could be installed without damage to the existing utilities, the multicolumn pier was selected as the preferred alternative due to their cost-effectiveness and more open profile.

Approach System
A structural solution rather than an earth fill embankment is necessary for the approaches to the bridge. The existing soils condition makes the existing utilities susceptible to damage due to settlement beneath any earth fill. Soil strengthening alternatives such as stone columns and soil grouting were studied, but did not provide adequate settlement protection. Lightweight fill and/or expanded polystyrene (EPS) were investigated, but again did not provide adequate settlement protection.

Two structural solutions were investigated. Each had a concrete slab supported on auger-cast piles spanning over the existing utilities. The difference in the alternatives was whether earth fill or more structure rose from the protective slab to support the approach roadway. It was found that even supported by auger-cast piles, the fill option created unacceptable settlement issues. Therefore, a structure supported on pile/shaft foundations with no earth fill is the recommended alternative for the approach systems.

Table 2: Bridge Options

Bridge Option	Span Layout	No. Span	Total Length	Superstructure	Structure Description	Δgrade @ CL 3rd Ave S	Cost
1	1	7	685 ft	36-in. Deep Steel Girders	Eleven 36-in. deep steel girders @ 7'-10"	1.3 ft	$54,160,000
2	1	7	685 ft	42-in. Deep Steel Girders	Ten 42-in. deep steel girders @ 8'-8"	2.1 ft	$48,650,000
3	1	7	685 ft	48-in. Deep Steel Girders	Nine 48-in. deep steel girders @ 9'-6"	3.3 ft	$46,760,000
4	1	7	685 ft	WF42G P.C. Girders	Seventeen WF42G @ 5'-0"	2.1 ft	$39,220,000
5	1	7	685 ft	WF50G P.C. Girders	Eleven WF50G @ 7'-10"	3.3 ft	$37,920,000
6	2	7	625 ft	36-in. Deep Steel Girders	Eleven 36-in. deep steel girders @ 7'-10"	1.3 ft	$54,470,000
7	2	7	625 ft	42-in. Deep Steel Girders	Ten 42-in. deep steel girders @ 8'-8"	2.1 ft	$49,450,000
8	2	7	625 ft	48-in. Deep Steel Girders	Nine 48-in. deep steel girders @ 9'-6"	3.3 ft	$47,650,000
9	2	7	625 ft	WF42G P.C. Girders	Seventeen WF42G @ 5'-0"	2.1 ft	$40,830,000
10	2	7	625 ft	WF50G P.C. Girders	Eleven WF50G @ 7'-10"	3.3 ft	$39,640,000
11	3	5	575 ft	36-in. Deep Steel Girders	Eleven 36-in. deep steel girders @ 7'-10"	1.3 ft	$49,440,000
12	3	5	575 ft	42-in. Deep Steel Girders	Ten 42-in. deep steel girders @ 8'-8"	2.1 ft	$44,780,000
13	3	5	575 ft	48-in. Deep Steel Girders	Nine 48-in. deep steel girders @ 9'-6"	3.3 ft	$43,170,000
14	3	5	575 ft	WF42G P.C. Girders	Seventeen WF42G @ 5'-0"	2.1 ft	$36,910,000
15	3	5	575 ft	WF50G P.C. Girders	Eleven WF50G @ 7'-10"	3.3 ft	$35,820,000
16	3	5	575 ft	Concrete Box Girder	Twelve webs @ 7'-2"	2.1 ft	$37,410,000
17	4	6	663 ft	42-in. Deep Steel Girders	Ten 42-in. deep steel girders @ 8'-6"	2.1 ft	$45,430,000
18	4	6	663 ft	WF50G P.C. Girders	Eleven WF50G @ 7'-10"	3.3 ft	$35,870,000

This page left intentionally blank

Recommended Option

Based on the alternative evaluation, Bridge Option 18, which consists of a six span (116 feet, 116 feet, 116 feet, 105 feet, 105 feet, 105 feet) bridge, was selected as the preferred replacement option. The superstructure consists of 11 WF50G prestressed concrete girders supported on multicolumn piers and drilled shaft foundations. The preferred approach option is hollow box structure. The anticipated cost of this structure, including approaches, is approximately $35,870,000. See Table 3 for a detail cost estimate for this preferred option.

This page left intentionally blank

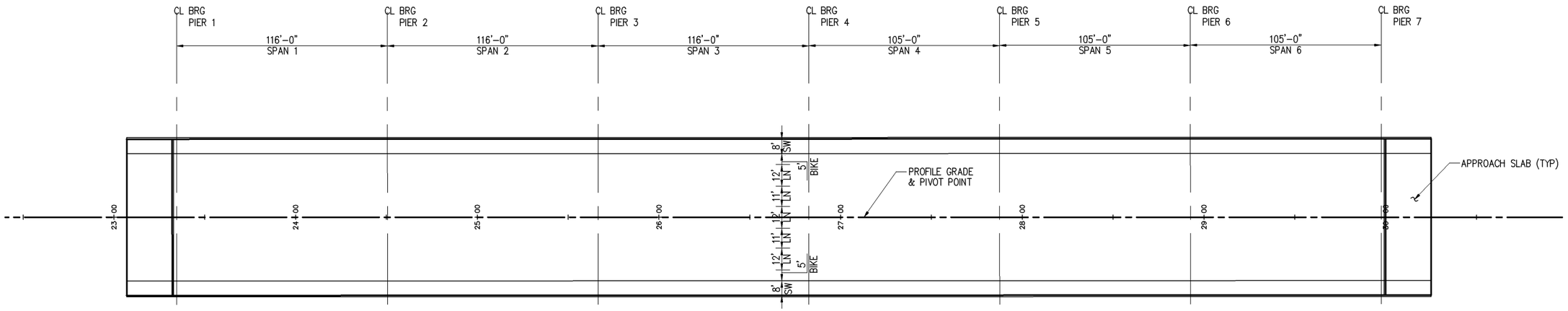

PLAN

0 30 60 90

SCALE IN FEET

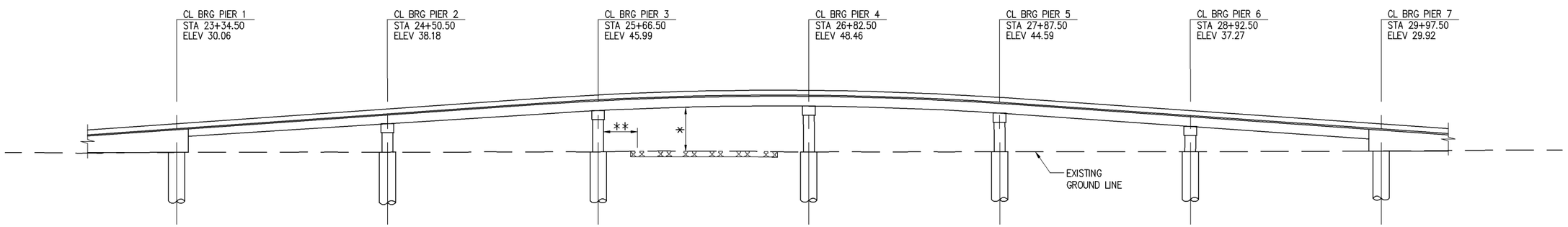

* 23'-6" MINIMUM VERTICAL CLEARANCE.
** 18'-0" MINIMUM HORIZONTAL CLEARANCE.

ELEVATION

GRADE ELEVATIONS SHOWN ARE FINISHED GRADES AT TOP OF ROADWAY SLAB ON S. LANDER ST. STATION LINE AND ARE EQUAL TO PROFILE GRADE

0 30 60 90

SCALE IN FEET

DRAFT

P.C. GIRDERS (WF50G)
LOADING: HL-93

REV'D	CHK'D	MADE	NATURE	MARK	DATE	VAULT/SWD SER. NO
			REVISIONS			

CAD USER: taunies PLOT DATE: Aug 23, 2007-03:27pm
PATH: V:\06531 (South Lander St)\Design\FIGURES\116FT - SL#1.dwg

kpff Consulting Engineers
1601 Fifth Avenue, Suite 1600
Seattle, Washington 98101
(206) 622-5822 Fax (206) 622-8130

City of Seattle
Seattle Department of Transportation

S LANDER STREET GRADE SEPARATION

116 FT SPAN LAYOUT #1 - WF50G

This page left intentionally blank

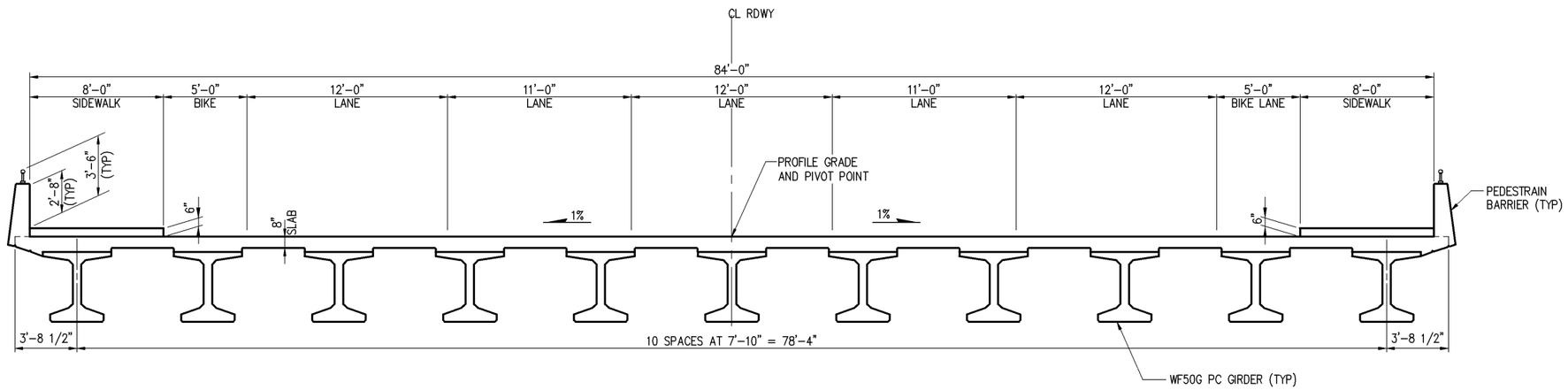

TYPICAL SECTION – WF50G

SCALE: 1/4" = 1'-0"

DRAFT

VAULT/SWD SER. NO	DATE	MARK	NATURE REVISIONS	MADE	CHK'D	REV'D

CAD USER: taunies PLOT DATE: Aug 23, 2007-03:27pm
PATH: V:\06531 (South Lander St)\Design\FIGURES\Section_116ft WF50G.dwg

kpff Consulting Engineers
1601 Fifth Avenue, Suite 1600
Seattle, Washington 98101
(206) 622-5822 Fax (206) 622-8130

City of Seattle
Seattle Department of Transportation

S LANDER STREET GRADE SEPARATION

WF50G

This page left intentionally blank

KPFF Consulting Engineers 1601 5th Ave, Suite 1600 Seattle, Wa. 98101 (206)622-5822	project: South Lander St Grade Separation *116ft Span - WF50G* location: City of Seattle client: City of Seattle	by: DGH date: 8/22/2007 job # 106531

116ft Span - WF50G

Std. Item Number	Item	Unit	Quantity	Unit Cost[1]	Total Cost
	SUPERSTRUCTURE				
	Bridge Railing Type Pedestrian	LF	1,360	$130	$176,800
	Traffic Barrier	LF	1,360	$160	$217,600
	Fractured Fin Finish	SY	570	$30	$17,100
	Conc. Class 4000D	CY	2,170	$900	$1,953,000
	Epoxy-Coated Steel Reinforcing Bar	LB	427,300	$2.00	$854,600
	Expansion Joint System	LF	260	$100	$26,000
	Bridge Drains	EACH	8	$1,000	$8,000
	Drain Pipe 12 in Diam	LF	350	$90	$31,500
	Prestressed Conc. Girder Series WF50G	LF	7,350	$230	$1,690,500
	Conc. Class 4000 for Bridge	CY	430	$750	$322,500
	St. Reinf. Bar for Bridge	LB	112,700	$1.50	$169,050
	Elastomeric Bearing Pad	EACH	44	$500	$22,000
	Bridge Railing Type Chain Link	LF	250	$100	$25,000
	Electrical Conduit	LS	1	$50,000	$50,000
					$5,563,650
	SUBSTRUCTURE				
	Conc. Class 4000 for Bridge	CY	1,020	$750	$765,000
	St. Reinf. Bar for Bridge	LB	269,260	$1.50	$403,890
	Soil Excavation for Shaft Including Haul	CY	6,575	$650	$4,273,750
	Conc. Class 4000P for Shaft	CY	6,575	$600	$3,945,000
	St. Reinf. Bar for Shaft	LB	1,738,950	$2.00	$3,477,900
	CSL Access Tube/Testing	LF	26,880	$45	$1,209,600
	Furnishing and Placing Temp. Casing for 8 ft Diam. Shaft	LF	700	$350	$245,000
	Structure Excavation Class A Incl. Haul	CY	1,555	$80	$124,400
	Shoring or Extra Excavation Class A	SF	16,800	$30	$504,000
	Shaft - 24 in Diameter - Temp	LF	5,600	$200	$1,120,000
	Removing Shaft Obstructions	LS	1	$100,000	$100,000
					$16,168,540
	APPROACH STRUCTURE				
	Bridge Railing Type Pedestrian	LF	450	$130	$58,500
	Traffic Barrier	LF	450	$160	$72,000
	Fractured Fin Finish	SY	195	$30	$5,850
	Conc. Class 4000 for Bridge	CY	2,735	$750	$2,051,250
	St. Reinf. Bar for Bridge	LB	723,730	$1.50	$1,085,595
	Structure Excavation Class A. Incl. Haul	CY	1,785	$80	$142,800
	Shaft - 24 in Diameter	LF	11,760	$200	$2,352,000
					$5,767,995
	RETAINING WALLS				
	Bridge Railing Type Pedestrian	LF	160	$130	$20,800
	Traffic Barrier	LF	160	$160	$25,600
	Fractured Fin Finish	SY	70	$30.00	$2,100
	Conc. Class 4000 for Bridge	CY	40	$750	$30,000
	St. Reinf. Bar for Bridge	LB	10,000	$1.50	$15,000
					$93,500
				Sum of total cost above =	$27,593,685
				Contingency (30%) =	$8,278,106
				Total[2] =	**$35,871,791**

notes:

(1) Costs in 2007 dollars (Most costs are derived from WSDOT BDM, last updated March 2007)

(2) Cost does not include mobilization, sales tax, or engineering

This page left intentionally blank

Appendices

Appendix A –Existing Utilities

Appendix B – Bridge Layouts

Appendix C – Bridge Typical Sections

Appendix D – Cost Estimates