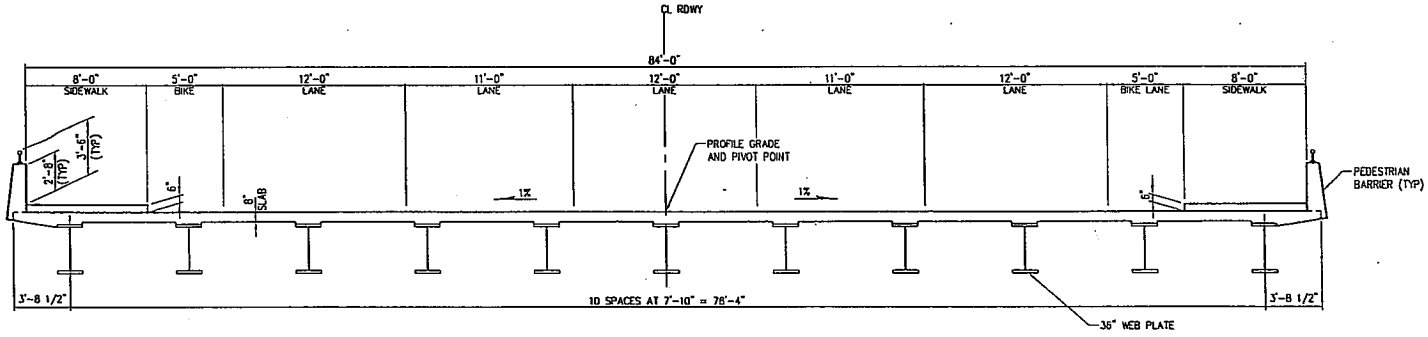

TYPICAL SECTION – 36 INCH WEB

SCALE: 1/4" = 1'-0"

DRAFT

VAULT/SWD SER. NO	DATE	MARK	NATURE REVISIONS	MADE	CHK'D	REV'D

CAD USER: lawnies PLOT DATE: Aug 20, 2007-12:09pm
PATH: V:\10653\ (South Lander St)\Design\FIGURES\Section_115ft 36 WEB.dwg

kpff Consulting Engineers
1601 Fifth Avenue, Suite 1600
Seattle, Washington 98101
(206) 622-5822 Fax (206) 622-8130

City of Seattle
Seattle Department of Transportation

S LANDER STREET GRADE SEPARATION

36 INCH WEB

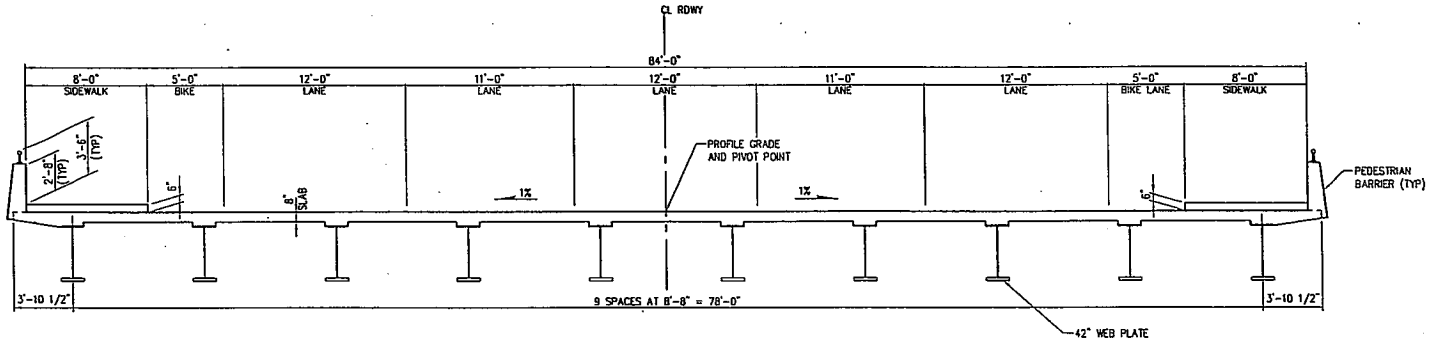

TYPICAL SECTION – 42 INCH WEB
SCALE: 1/4" = 1'-0"

DRAFT

VAULT/SWD SER. NO	DATE	MARK	NATURE REVISIONS	MADE	CHK'D	REV'D

CAD USER: launiea PLOT DATE: Aug 20, 2007-12:09pm
PATH: V:\10653\(South Lander St)\Design\FIGURES\Section_115ft 42 WEB.dwg

kpff Consulting Engineers
1601 Fifth Avenue, Suite 1600
Seattle, Washington 98101
(206) 622-5822 Fax (206) 622-8130

City of Seattle
Seattle Department of Transportation

S LANDER STREET GRADE SEPARATION
42 INCH WEB

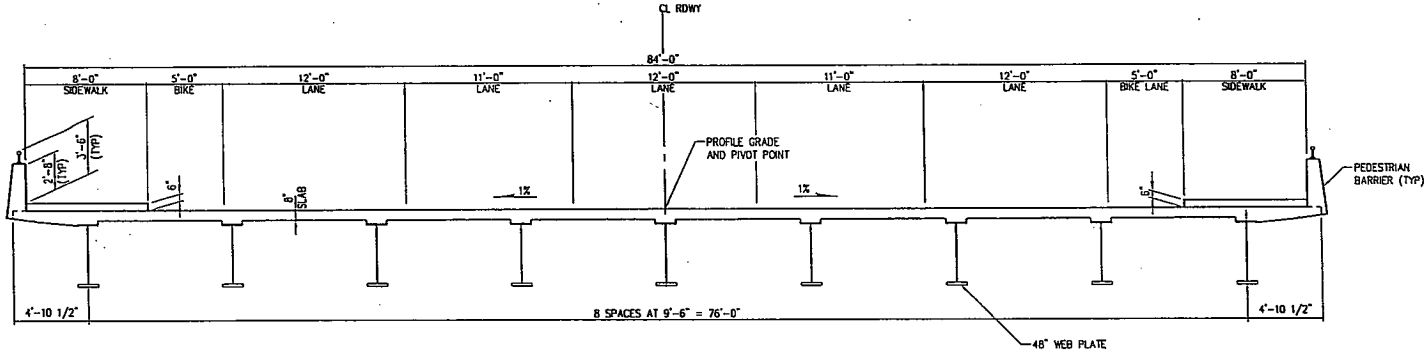

TYPICAL SECTION – 48 INCH WEB

SCALE: 1/4" = 1'-0"

DRAFT

VAULT/SWD SER. NO	DATE	MARK	NATURE REVISIONS	MADE	CHK'D	REV'D

CAD USER: tounie PLOT DATE: Aug 20, 2007-12:09pm
PATH: V:\106531 (South Lander St)\Design\FIGURES\Section_115ft 48 WEB.dwg

kpff Consulting Engineers
1601 Fifth Avenue, Suite 1600
Seattle, Washington 98101
(206) 622-5822 Fax (206) 622-8130

City of Seattle
Seattle Department of Transportation

S LANDER STREET GRADE SEPARATION

48 INCH WEB

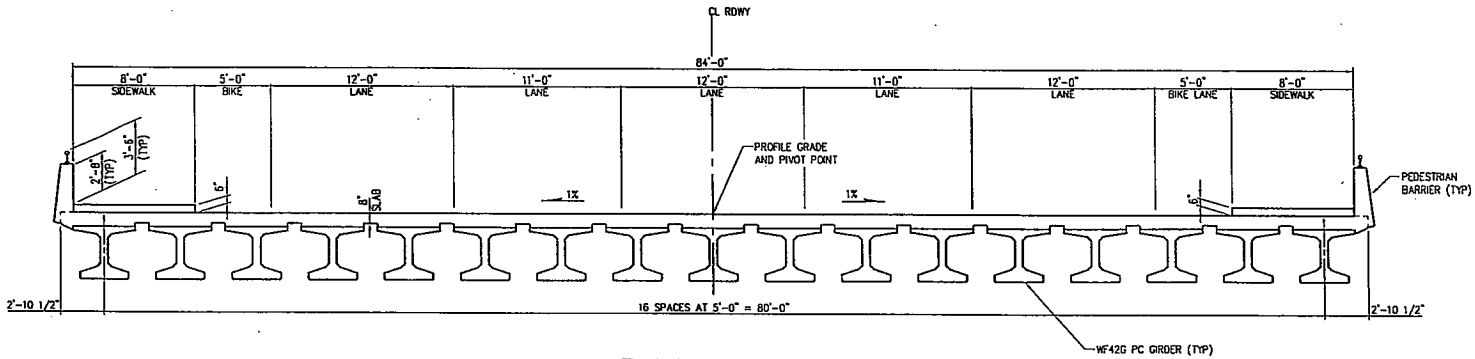

TYPICAL SECTION – WF42G
SCALE: 1/4" = 1'-0"

DRAFT

VAULT/SWD SER. NO	DATE	MARK	NATURE REVISIONS	MADE	CHK'D	REV'D

CAD USER: lounica PLOT DATE: Aug 20, 2007-12:09pm
PATH: V:\106531 (South Lander St)\Design\FIGURES\Section_116H WF42G.dwg

kpff Consulting Engineers
1601 Fifth Avenue, Suite 1600
Seattle, Washington 98101
(206) 622-5822 Fax (206) 622-8130

City of Seattle
Seattle Department of Transportation

S LANDER STREET GRADE SEPARATION
WF42G

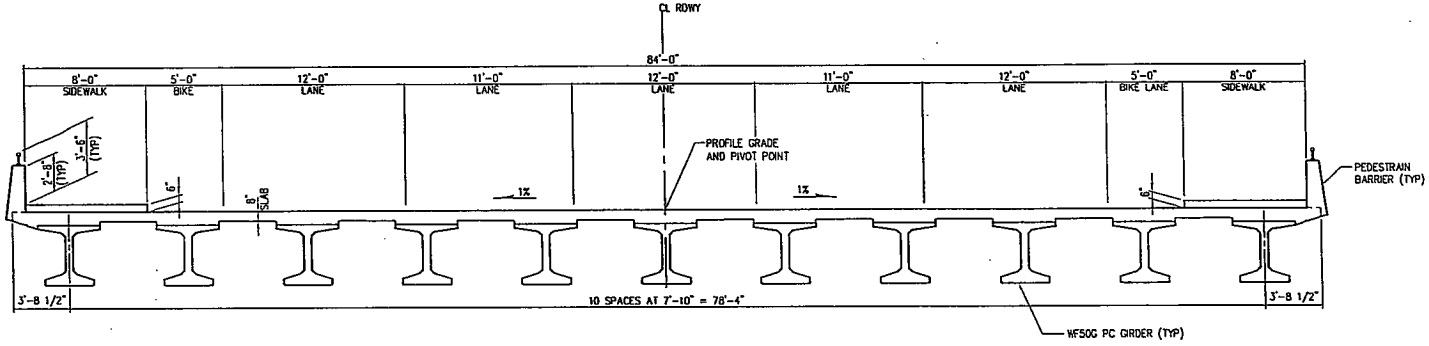

TYPICAL SECTION – WF50G
SCALE: 1/4" = 1'-0"

DRAFT

VAULT/SWD SER. NO	DATE	MARK	NATURE REVISIONS	MADE	CHK'D	REV'D

CAD USER: lourica PLOT DATE: Aug 20, 2007-12:09pm
PATH: V:\106531 (South Lander St)\Design\FIGURES\Section_11611 WF50G.dwg

kpff Consulting Engineers
1601 Fifth Avenue, Suite 1600
Seattle, Washington 98101
(206) 622-5822 Fax (206) 622-8130

City of Seattle
Seattle Department of Transportation

S LANDER STREET GRADE SEPARATION
WF50G

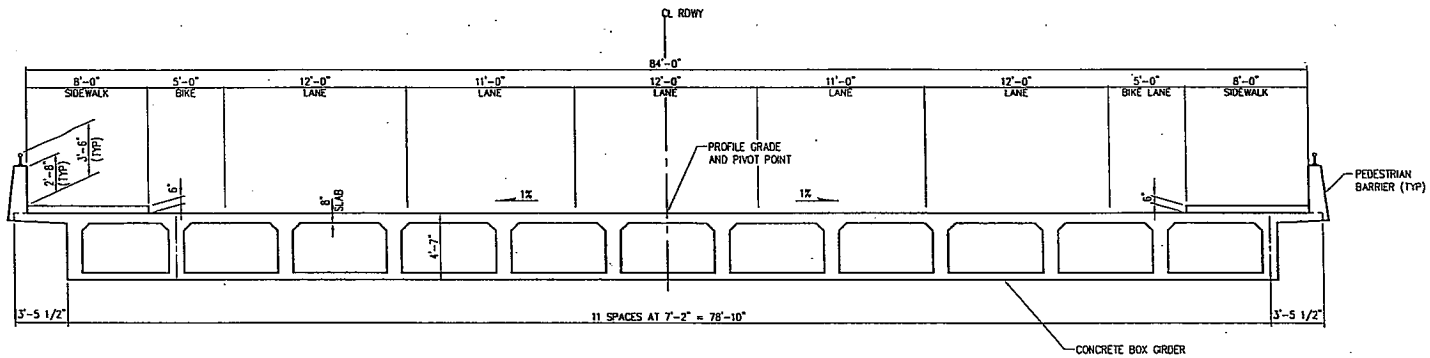

TYPICAL SECTION – CONCRETE BOX GIRDER

SCALE: 1/4" = 1'-0"

DRAFT

VAULT/SWD SER. NO	DATE	MARK	NATURE REVISIONS	MADE	CHK'D	REV'D

CAD USER: launie PLOT DATE: Aug 20, 2007-12:09pm
PATH: V:\1065J1 (South Lander St)\Design\FIGURES\Section_115ft Box Girder.dwg

kpff Consulting Engineers
1601 Fifth Avenue, Suite 1600
Seattle, Washington 98101
(206) 622-5822 Fax (206) 622-8130

City of Seattle
Seattle Department of Transportation

S LANDER STREET GRADE SEPARATION

CONCRETE BOX GIRDER