SOUTH LANDER STREET GRADE SEPARATION PROJECT

CHANNELIZATION MEMORANDUM

DRAFT

Prepared for:

City of Seattle
Department of Transportation

Prepared by:

kpff Consulting Engineers
1601 Fifth Avenue, Suite 1600
Seattle, WA 98101

KPFF Project No. 106531

March 15, 2007

Table of Contents

Page
1. Executive Summary 1
2. Introduction 2
3. Design Criteria 5
   Existing Conditions 5
4. Section Alternatives 6
   Section A 6
   Section B 7
   Section C 8
5. Additional Elements 8
   Guardrail and Handrail Options 8
   Access and right-of-way Considerations 8
   Structural Considerations 9
6. Section Evaluation 10
7. Summary 11

DRAFT

1. Executive Summary

This Channelization Memorandum is a re-evaluation of the preferred typical section identified in the Type, Size and Location Study (TS&L) that examined a grade separation of the South Lander Street over the Burlington Northern Santa Fe (BNSF) railroad tracks in June 2003. The re-evaluation is needed due to changes in existing conditions, updated traffic data, and changing regional needs. The purpose of this Memorandum is to define a preferred configuration for pedestrian, bicycle and traffic lane improvements.

The intent of the grade separation of South Lander Street over the existing BNSF railroad tracks is to improve safety and to reduce vehicular delays due to increasing rail traffic. The project limits along South Lander Street extend between 1st Avenue South and 4th Avenue South.

The typical cross section should meet the needs of users, but also create the least economic impact both from a construction cost and right-of-way standpoint. Three typical cross sections have been developed for this analysis and are presented in detail in the Memorandum. Variables for each section are lane widths, sidewalk or multi-use trail widths and locations and barrier configurations.

- **Section A:** Five lanes of vehicular traffic with barrier separated multi-use (pedestrian and bicycle) trail on north side only. This section was included in the TS&L. Structure width is 82.5 feet.
- **Section B:** Five lanes of vehicular traffic with barrier separated multi-use (pedestrian and bicycle) trails on north and south. Structure width 88 feet.
- **Section C:** Five lanes of traffic, two bicycle lanes with curb and sidewalk on north and south sides. Structure width is 87 feet.

Of the three sections listed above, Section C appears to best meet the user needs. It offers a separation of pedestrians and bicyclists from vehicles and each other, provides pedestrian and bicycle access on both sides of the structure, which is consistent with pedestrian and bicycle facilities in the area, and allows adequate width for freight and bus vehicles.

The increase in width of the structure required for Section C as compared to Section A is 4.5 feet, translating roughly into $890,000 to $1,090,000 additional construction cost from 1st Avenue South to 4th Avenue South. The total width of the Section C structure is 87 feet, which leaves 6.5 feet of remaining right-of-way on the north and south.

2. Introduction

South Lander Street is located in the North Duwamish industrial area and is heavily used by freight traffic and commuter traffic. The corridor is affected by traffic from the South-of-Downtown (SODO) district as well as event traffic from Safeco Field and Qwest Stadium. The South Lander Street corridor is also a pedestrian and bicycle route between the Sound Transit SODO Station and office buildings such as the Starbucks complex. See Figure 1 for an aerial of the South Lander Street corridor.

It is anticipated the South Lander Street corridor will be of vital importance for traffic in the east/west direction both during the Alaskan Way Viaduct construction period and after to accommodate the projected traffic demands for the industrial area.

The TS&L examined existing traffic volume data for the year 2000 and future traffic conditions modeled for the year 2025. The basic cross section consists of two through lanes in each direction and a left turn-lane with sidewalks or multi-use trails on one or both sides. All Channelization alternatives reviewed within this Memorandum incorporate a five-lane section to accommodate left turn-lanes. The multi-use trail would provide access for both pedestrians and bicyclists behind a jersey type barrier, separated from vehicular traffic.

Three channelization cross sections were developed in conjunction with Seattle Department of Transportation (SDOT) for review. These are presented with each alternative consisting of traffic lanes, multi-use trail(s) or sidewalks, traffic barriers, and handrails. These sections are presented in detail with associated opportunities and constraints in Section 6. Brief descriptions are provided below:

- **Section A**: Five lanes of vehicular traffic with barrier separated multi-use trail on north side only.
- **Section B:** Five lanes of vehicular traffic with barrier separated multi-use trails on north and south.
- **Section C:** Five lanes of traffic, two bicycle lanes with curb and sidewalk on north and south sides.

Each of the three sections will fit within the existing 100-foot right-of-way. Evaluations of property and access impacts are provided per each section as a result of the differing widths.

The following sections of this memorandum define the design criteria, describe the channelization sections, address property and cross-street associated access issues as they are impacted by the section choice, and associated cost differences.

DRAFT

VAULT/SWD SER. NO	DATE	MARK	NATURE	MADE	CHK'D	REV'D
			REVISIONS			

kpff Consulting Engineers
1201 Third Avenue, Suite 900
Seattle, Washington 98101
(206) 622-5822 Fax (206) 622-8130

S LANDER STREET GRADE SEPARATION

FIGURE 1

N

GRAPHIC SCALE

0 50 100 200

1 inch = 100 ft.

This page left intentionally blank

3. Design Criteria

Existing Conditions

Street Classification: Minor Arterial (Source: Seattle Right-of-Way Improvements Manual, Version 1.1).

RIGHT-OF-WAY Width: 100 feet

South Lander Street is designated as the following:

- Designated truck route
- Bus Rapid Transit Route (BRT)
- Bicycle Master Plan Route

Roadway Criteria

A. Reference Sources

1. Seattle Right-of-Way Improvements Manual, Version 1.1.
2. City of Seattle Standard Plans for Municipal Public Works Construction, 2005.
3. City of Seattle Standard Specifications for Road, Bridge, and Municipal Construction, 2005.
4. American Association of State Highway and Transportation Officials (AASHTO), A Policy on Geometric Design of Highways and Streets, 2001 Edition.
5. AASHTO Guide for Development of Bicycle Facilities, 1999.
6. City of Seattle Traffic Code, Title 11 of the Seattle Municipal Code.
7. Washington State Department of Transportation (WSDOT) Design Manual.
8. WSDOT Bridge Design Manual

B. Street Elements

1. Centerline Profile
   a. AASHTO: Maximum down-grades for structures, 7 percent, 30 mph design speed (Source: AASHTO Exhibit 3-2, 2001).
2. Typical Section
   a. Cross Slope: Desirable 2 percent, maximum 4 percent, minimum 1 percent (Source: Seattle Right-of-Way Improvements Manual, Version 1.1).
   b. Lane Widths: 11 feet to 14 feet (source: Seattle Right-of-Way Improvements Manual, Version 1.1).

Non-motorized Criteria

A. Sidewalk Width: 6 feet minimum unobstructed linear sidewalk space (Seattle right-of-wayIM), 8 feet may be required in commercial areas (AASHTO)

B. Bike Lane Width: 5 feet minimum (AASHTO)

C. Multi-Use Trail – Two Way Traffic – 10 feet with 2-foot shoulders/shy distance (14 feet total)

D. Multi-Use Trail – One Way Traffic – 6 feet with 2-foot shoulders/shy distance (10 feet total)

Deviations

A. Deviations from the City of Seattle Standards are listed below:

1. No 4.5-foot sidewalk planter across bridge structure

4. Section Alternatives

Three Channelization sections were developed for this memorandum for review. Each is described below with associated figure.

The limit these sections are applied on South Lander is approximately between Occidental Avenue South and 3rd Avenue South. Total widths given include outside barrier requirements. Adjustments to the channelization widths will be provided at the intersections with 1st Avenue South and 4th Avenue South to accommodate other elements of design not on the structure, such as landscaping, curb ramps, dual left turn widths, etc.

Section A

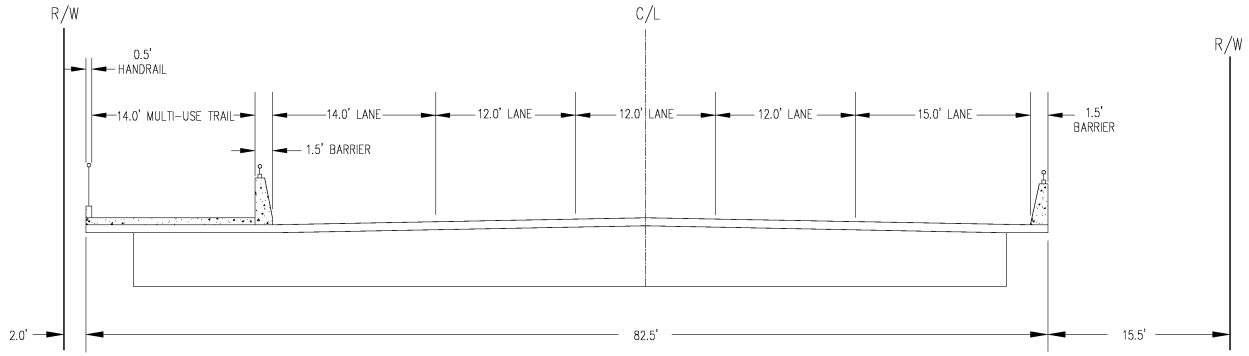

Figure 2

Section A is an updated version of the cross section recommended in TS&L. See Figure 2. The total width of this structure is 82.5 feet.

The multi-use trail, serving both pedestrians and bicyclists is provided only along the northern edge of the proposed roadway. The single trail would be access for pedestrians and bicyclists in both the eastbound and westbound direction.

The traffic lane layout consists of two westbound lanes, two eastbound lanes, and one center lane, with jersey type concrete barriers at the curb. Traffic lane widths have been sized to accommodate freight and bus concerns of proximity to barriers. The inside lanes have 12 foot widths and the outside lanes have widths of 14 feet westbound, nearer the trail, and 15 feet eastbound, on the edge of the structure.

As seen in Figure 2, a 2-foot clearance from the right-of-way is provided along the northern edge. A 15.5-foot clearance is provided along the southern edge. The lanes also are aligned with through traffic lanes at both the 1st Avenue South and 4th Avenue South intersections.

Section B

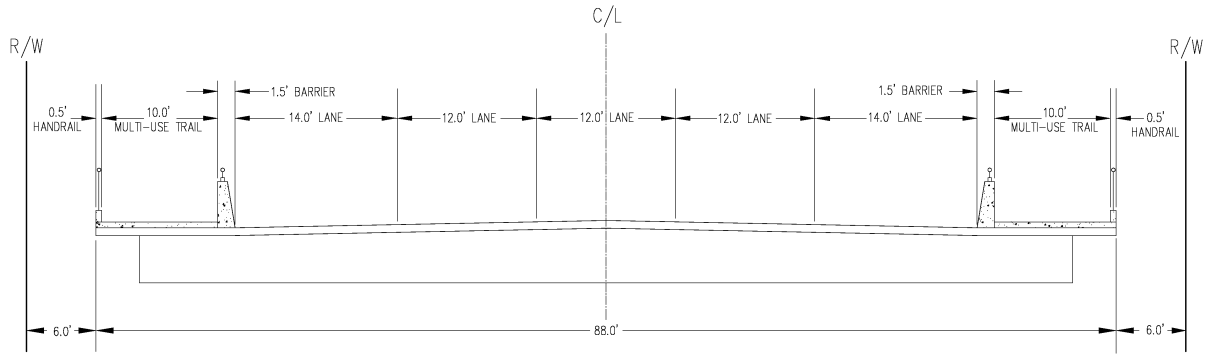

Figure 3

Section B adds a multi-use trail along the eastbound edge of Section A. See Figure 3. In providing two multi-use trails to be used by both pedestrians and bicyclists, the general flow is assumed to be one-way, either eastbound or westbound. This allows the trail width to be reduced from 10 feet to 6 feet, with 2 feet of shoulder/shy each side. The total width of this structure is 88 feet.

The traffic lane layout consists of two outside 14-foot lanes, two inside 12-foot lanes, and one center 12-foot lane, with jersey type concrete barriers at the curb.

As seen in Figure 3, this section provides 6 feet of clearance on each side of the structure to the right-of-way. The lanes are aligned with existing through traffic lanes at the 1st Avenue South and 4th Avenue South intersections.

Section C

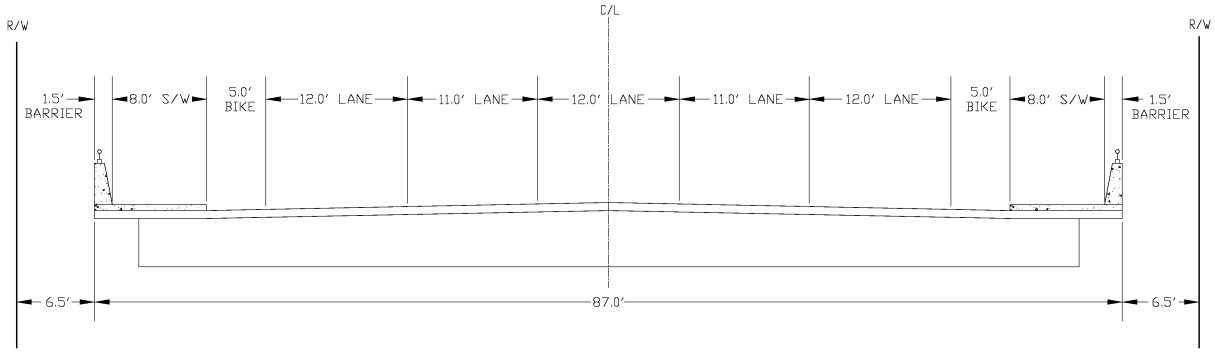

Figure 4

Section C consists of five lanes, two bicycle lanes, and two sidewalks. The jersey type barrier between the vehicles and trail shown in Sections A and B have been replaced with standard curbs. See Figure 4. The total width of this structure is 87 feet.

Bicycle lanes are shown 5 feet in width and the sidewalks as 8 feet in width per SDOT standards. The outside vehicular lanes have been reduced in width due to the addition of the bicycle lanes along the outside lanes and due to the need for shy distance to the now removed jersey barrier. The inside through lanes have been modified to reflect SDOT standards of 11-feet wide. The westbound 11-foot lane widens to 12 feet, as it becomes a left turn lane.

Figure 4 demonstrates this section provides 6.5 feet of clearance on both sides of the structure to the right-of-way. The lanes are aligned with existing through traffic lanes at the 1st Avenue South and 4th Avenue South intersections.

Cross sections and plans views are presented at the end of the Memorandum in Figures 5 to 7.

5. Additional Elements

Guardrail and Handrail Options

The TS&L recommended section, which is similar to Section A in this Memorandum, provided single-slope traffic barriers on the outside of the traffic lanes and pedestrian handrails on the outside of the multi-use trail. The traffic barriers are approximately 1.5-feet wide and the handrails are approximately 0.5-feet wide.

Similar traffic and pedestrian barrier sizes and configurations were accounted for with the sections developed for this Memorandum. Final barrier types and widths will be refined during the design process.

Access and Right-of-Way Considerations

The grade separation will affect adjacent properties and their access to South Lander Street by eliminating access to and from South Lander Street between 1st Avenue South and 3rd Avenue South. Driveway modifications for properties that currently access South Lander Street will be developed during the design process.

Three buildings abut the right-of-way of South Lander Street between 1st Avenue South and 4th Avenue South. Two buildings are outside of the structure limit, on the north and south corners of the South Lander Street and 1st Avenue South intersections.

The single building along the right-of-way within the structure limit is the existing building along the southern right-of-way, between 3rd Avenue South and the railroad tracks. This building, currently occupied by Pacific Galleries Antique Mall, exists along the right-of-way with air conditioner facilities and signs encroaching into the right-of-way. The building also has active loading docks on the northwest corner.

The proximity of the new structure to this building is 15.5 feet from Section A, 6 feet from Section B and 6.5 feet from Section C. The 15.5 feet in Section A could provide a 12-foot access drive to the loading dock. Section B and Section C would not allow access to the north side of the building and to the loading dock on the south side of the structure for loading dock access and still remain within the existing right-of-way. Fire access for the building could be provided from a drive on the north side of the new structure that serves as the Seattle School Facility's access drive and/or parking lot and under the structure. Fire lane access to the BNSF tracks, via a gated fence is also anticipated using this route.

Access modifications for the Seattle School Facility on the east side of the railroad tracks include redirecting their driveways to 3rd Avenue South on the north side of the new structure. Each of the three sections will similarly impact the school requiring the driveways to be relocated. The final configuration of the relocated driveways will be refined during design.

Impacts to properties along South Lander Street on the west side of the railroad tracks are the same for each alternative.

Structural Considerations

Preliminary construction costs for three different bridge widths, corresponding to three channelization sections, were evaluated. For each section, three bridge superstructure types were considered. The bridge types included prestressed concrete girders, multi-cell concrete box, and steel plate girders. For preliminary cost comparison, the assumed structure length was 900 feet. This distance is from the start of the approach near 1st Avenue to the end of the approach near 3rd Avenue. The following table summarizes the difference in cost between the three bridge width sections. The values shown are the added cost for bridge widths greater than 82.5 feet. The values do not include sales tax, engineering, or contingency.

Table 1 – Additional Structure Cost for Sections B and C

Superstructure Type	Section B (88 feet)	Section C (87 feet)
Prestressed Concrete Girders	$1,090,000	$890,000
Multi-Cell Concrete Box	$1,190,000	$970,000
Steel Plate Girders	$1,340,000	$1,090,000

6. Section Evaluation

The three sections are presented below to summarize specific opportunities and constraints.

Section A: Five lanes of vehicular traffic with barrier separated multi-use trail on north side only.

Opportunities

- Smallest structure width at 82.5 feet, resulting in a lower cost.
- 15.5 feet of clearance is provided between the structure and the southern right-of-way boundary.
- May allow access to existing Pacific Galleries Antique Mall loading dock.
- The trail is separated from vehicular traffic with concrete barriers.

Constraints

- Restricts pedestrian and bicycle traffic to the north side only.
- Combines pedestrians and bicycles use on a single two directional trail.

Section B: Five lanes of vehicular traffic with barrier separated multi-use trails on north and south.

Opportunities

- Trail provided on both north and south of bridge. Consistent with other facility locations in the area.
- The trail is separated from vehicular traffic with concrete barriers.

Constraints

- Larger structure width, at 88 feet, resulting in higher cost.
- The multi-use trails provided with this section mix pedestrian and bicycle traffic.
- The added width restricts access along the southern edge of the structure for loading dock.

Section C: Five lanes of traffic, two bicycle lanes and sidewalk on north and south sides.

Opportunities

- Bicycle lanes provided along eastbound and westbound traffic lanes.
- Sidewalk for pedestrians provided both north and south of structure.
- Sidewalk separated from bicycles.

Constraints

- Larger structure width, at 87 feet, resulting in higher cost.
- The added width restricts access along the southern edge of the structure for loading dock.

7. Summary

The intent of the grade separation of South Lander Street over the existing BNSF railroad tracks is to improve safety and to reduce vehicular delays due to increasing rail traffic. Each of the three sections meets this goal.

The purpose of this Memorandum is to define a preferred configuration for pedestrian, bicycle and traffic lane improvements.

Three sections have been compared in respect to size, cost, pedestrian and bicycle accessibility, and property access impacts. Each section provides unique benefits and challenges.

Of the three sections presented within the Memorandum, Section C appears to best meet the user needs. It offers a separation of pedestrians and bicyclists, provides pedestrian and bicycle access on both sides of the structure, which is consistent with pedestrian and bicycle facilities in the area, and allows adequate width for freight and bus vehicles.

It is also understood that freight communities and King County Metro prefer to have bicyclists on separate paths from the traveled way. In order to provide this request, the structure section would need to be widened to accommodate the barriers and shy distances from these barriers. Another consideration to this approach is that a certain percentage of bicyclists will likely choose to remain within the traveled lanes, regardless of the multi-use trail provided.

With Section C, a balance can be accomplished to provide vehicles additional pavement distance to the curbs from the traffic lanes with the bicycle lanes. It separates the bicyclists into their own lanes, out of the traveled way, and eliminates the need for barriers at the curb line.

The increase in width of the structure required for Section C as compared to Section A is 4.5 feet, translating roughly into $890,000 to $1,090,000 additional construction cost from 1st Avenue South to 4th Avenue South. The total width of the Section C structure is 87 feet, which leaves 6.5 feet of remaining right-of-way on the north and south.

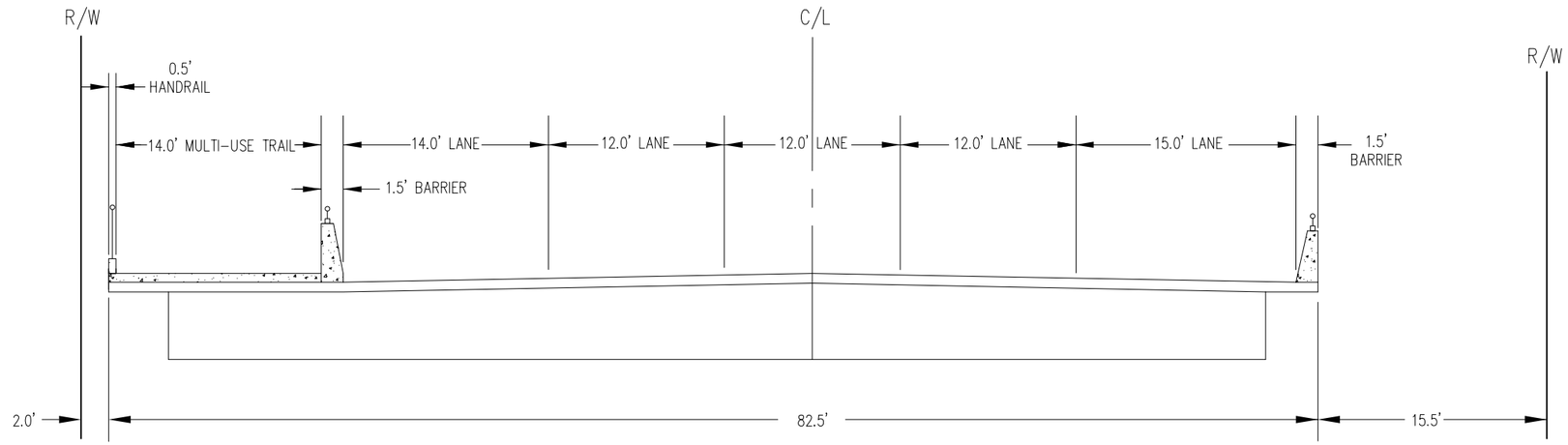

SECTION A

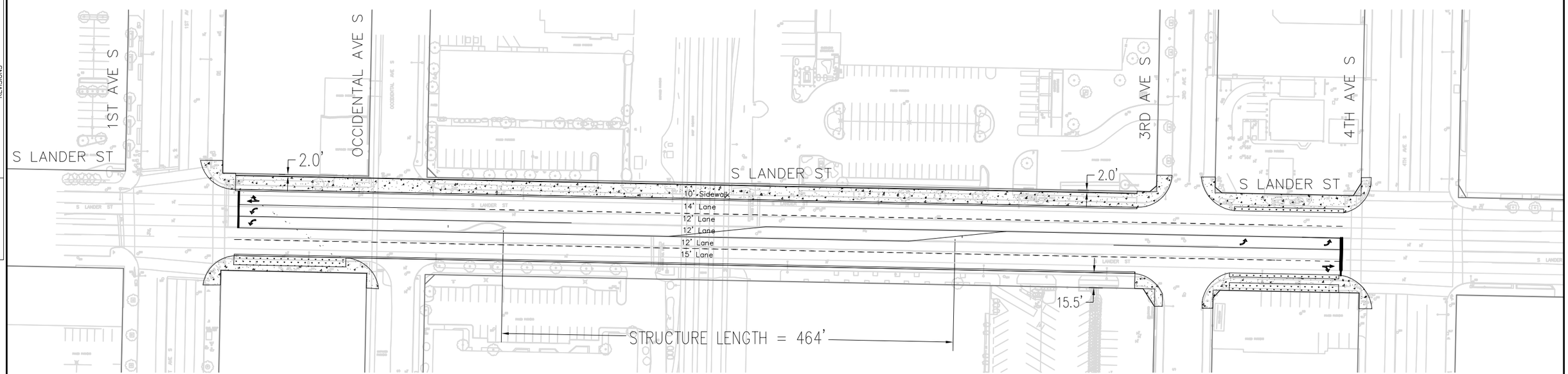

PLAN VIEW

DRAFT

MULTI USE TRAIL

LANDSCAPE

VAULT/SWD SER. NO	DATE	MARK	NATURE REVISIONS	MADE	CHK'D	REV'D

kpff Consulting Engineers
1201 Third Avenue, Suite 900
Seattle, Washington 98101
(206) 622-5822 Fax (206) 622-8130

S LANDER STREET GRADE SEPARATION

SECTION A
FIGURE 5

GRAPHIC SCALE
0 50 100 200
1 inch = 100 ft.

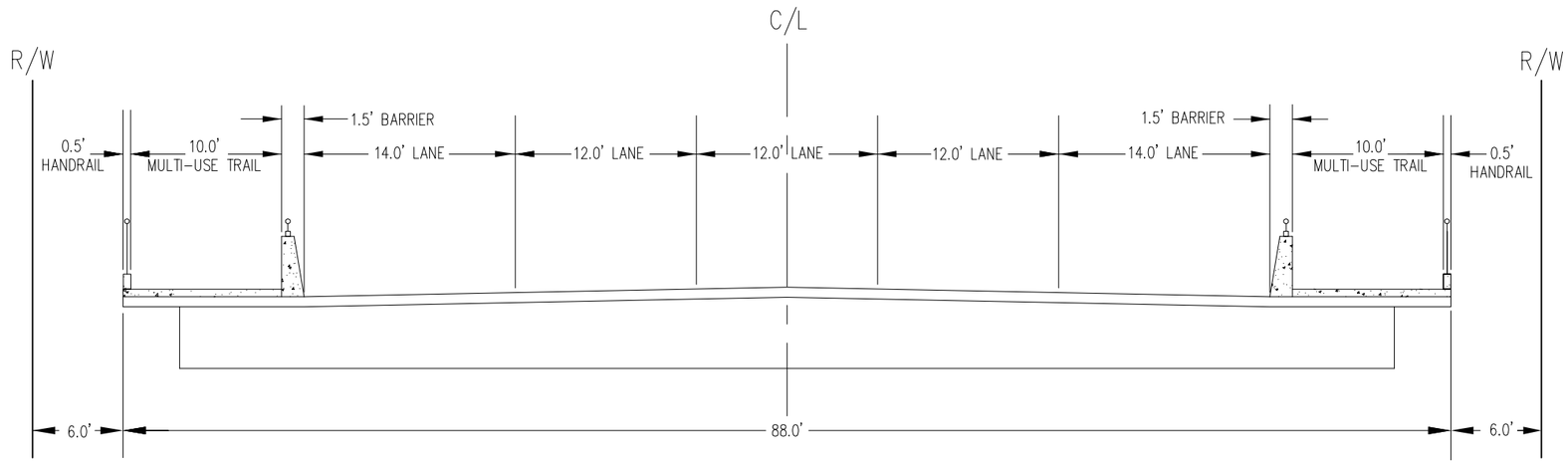

SECTION B

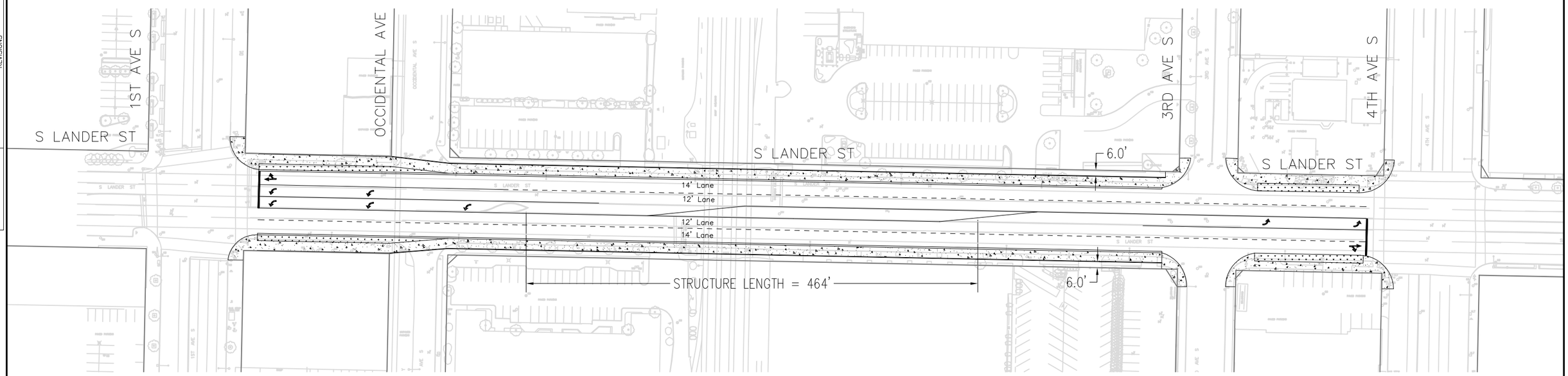

PLAN VIEW

DRAFT

MULTI USE TRAIL

LANDSCAPE

VAULT/SWD SER. NO	DATE	MARK	NATURE REVISIONS	MADE	CHK'D	REV'D

kpff Consulting Engineers
1201 Third Avenue, Suite 900
Seattle, Washington 98101
(206) 622-5822 Fax (206) 622-8130

S LANDER STREET GRADE SEPARATION

SECTION B

FIGURE 6

N

GRAPHIC SCALE

0 50 100 200

1 inch = 100 ft.

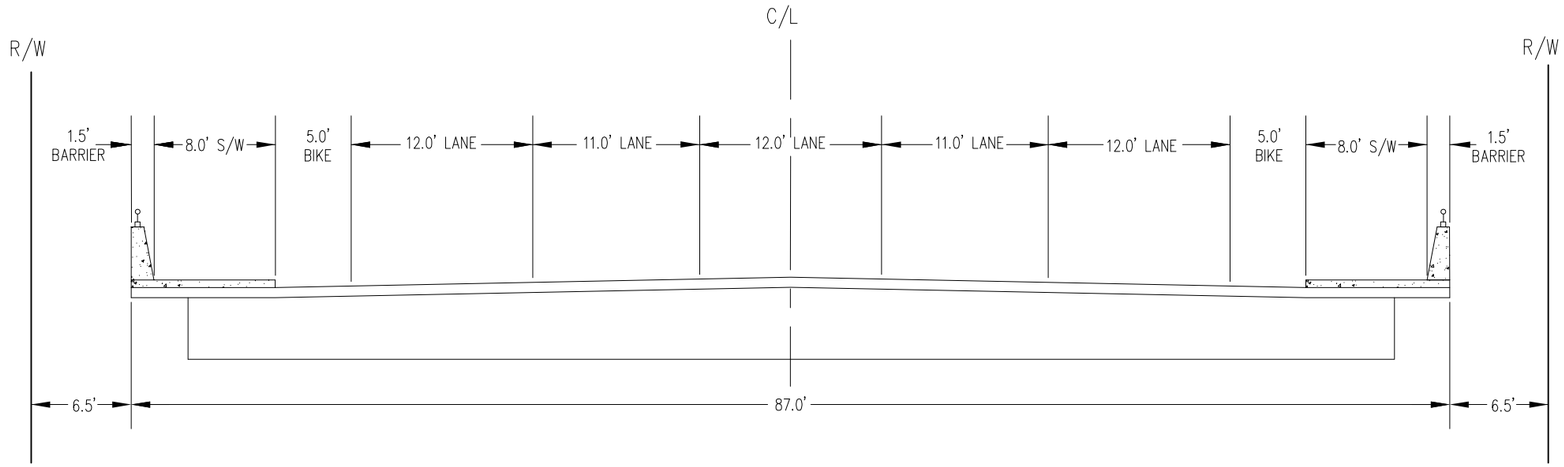

SECTION C

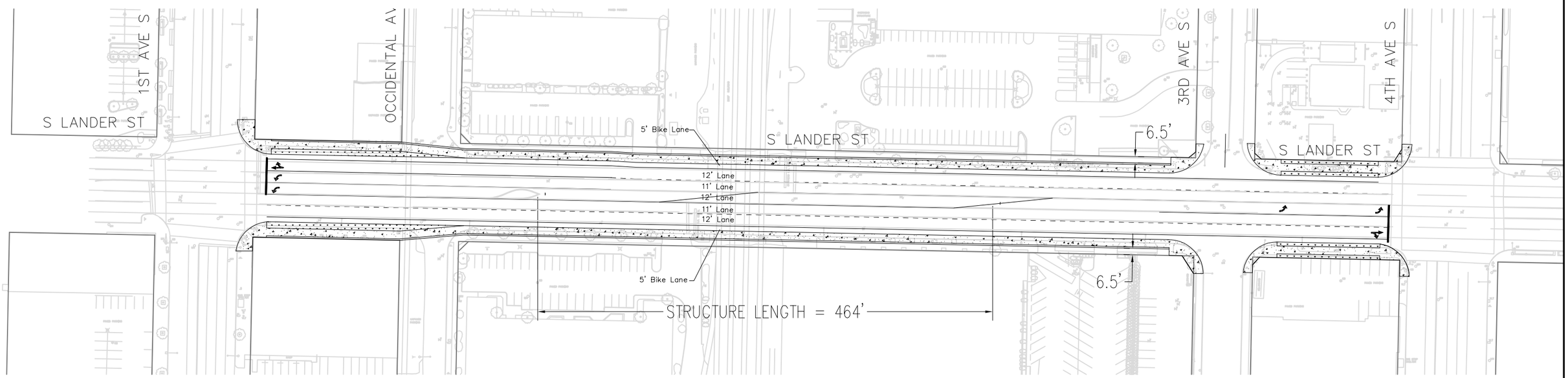

PLAN VIEW

DRAFT

SIDEWALK

LANDSCAPE

VAULT/SWD SER. NO	DATE	MARK	NATURE REVISIONS	MADE	CHK'D	REV'D

kpff Consulting Engineers
1201 Third Avenue, Suite 900
Seattle, Washington 98101
(206) 622-5822 Fax (206) 622-8130

S LANDER STREET GRADE SEPARATION

SECTION C

FIGURE 7

GRAPHIC SCALE

0 50 100 200

1 inch = 100 ft.

Intentionally left blank

DRAFT