REGION NO.	STATE	FEDERAL AID PROJECT NO.	SHEET NO.
10	WA		

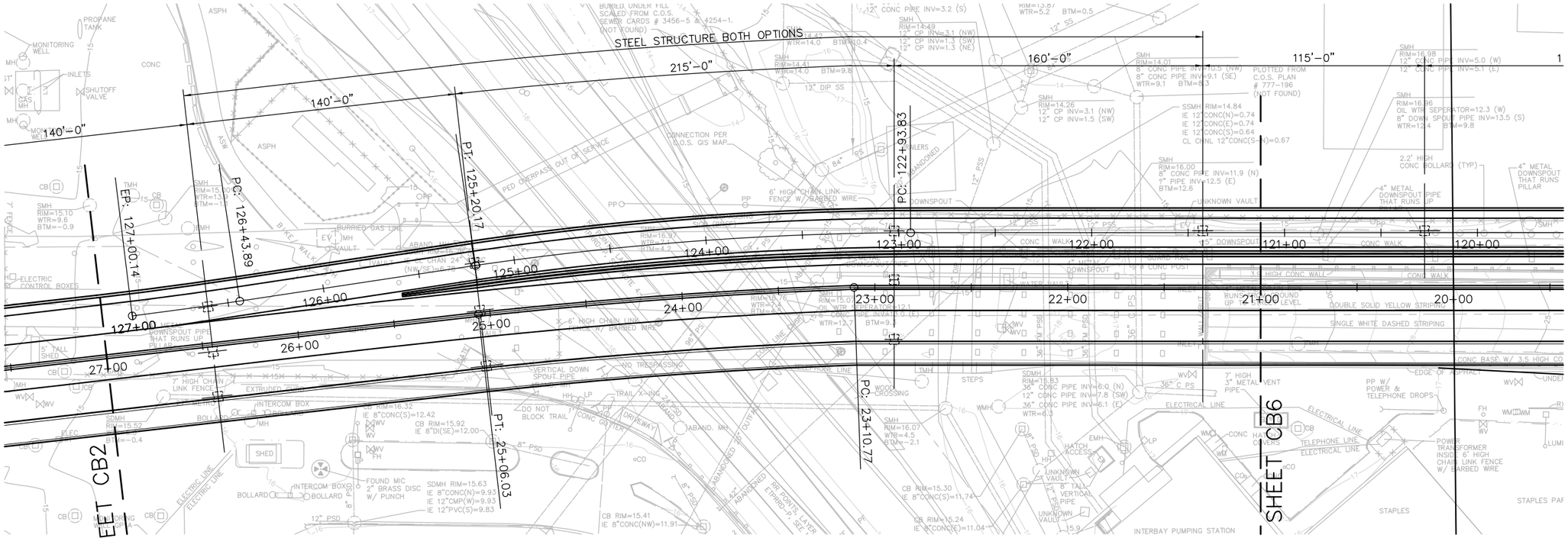

PLAN – MAINLINE

SCALE: 1" = 30'

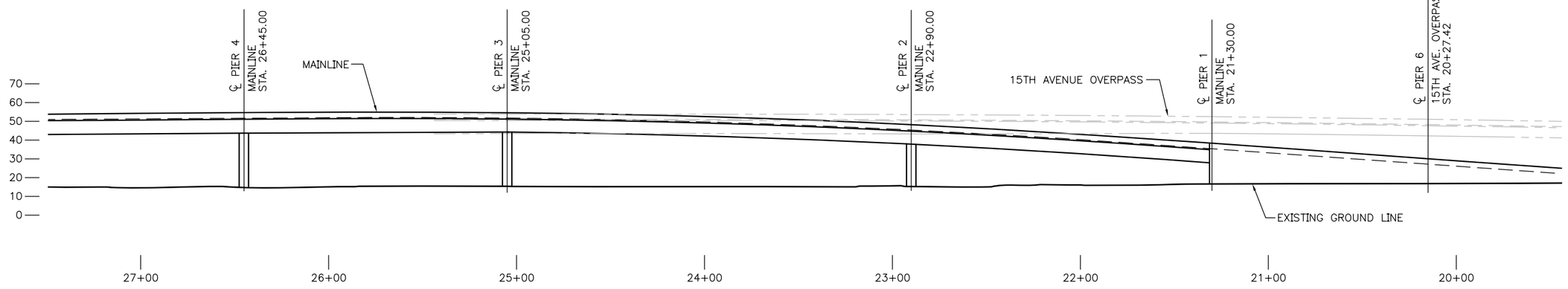

ELEVATION – MAINLINE

SCALE: 1" = 30'

N:\36339\Drawings\Sheets\CONC_BOX_OPT1\CB_PLEL1.dwg
Nov/16/2006 9:44am

CB1
PLAN AND ELEVATION

VAULT SEQUENCE NO. ????	MARK	DATE	MADE	CHKD	REVD	DESCRIPTION
REVISIONS						

HNTB

HNTB Corporation
600 108th Avenue NE, Suite 900
Bellevue, WA 98004

Tel (425) 455-3555
Fax (425) 453-9179
www.hntb.com

APPROVED FOR ADVERTISING
KENNETH J. NAKATSU
DEPARTMENT OF EXECUTIVE ADMINISTRATION

SEATTLE, WASHINGTON . . 20 . .

BY: .

DIRECTOR, CONTRACTING SERVICES

NAME OR INITIALS AND DATE	INITIALS AND DATE
DESIGNED .	REVIEWED:
CHECKED .	DES. . SPU CONST. .
	SDOT . PROJ. MGR. .
DRAWN .	RECEIVED .
CHECKED .	REVISED AS BUILT .

ALL WORK DONE IN ACCORDANCE WITH THE CITY OF SEATTLE STANDARD PLANS AND SPECIFICATIONS AND OTHER DOCUMENTS CALLED FOR IN SECTION 0-02.3 OF THE PROJECT MANUAL.

City of Seattle
SEATTLE DEPARTMENT OF TRANSPORTATION

ORDINANCE NO. . . APPROVED . .

FUND: .

SCALE: H. V. INSPECTOR'S BOOK. .

MAGNOLIA BRIDGE REPLACEMENT
TYPE, SIZE, AND LOCATION
CONCRETE BOX ALTERNATE

JOB NO.	
PC	XXXXX
R/W	XXXXX
CO	XXXXX
VAULT PLAN NO.	???–???
SHEET XX OF ?	

REGION NO.	STATE	FEDERAL AID PROJECT NO.	SHEET NO.
10	WA		

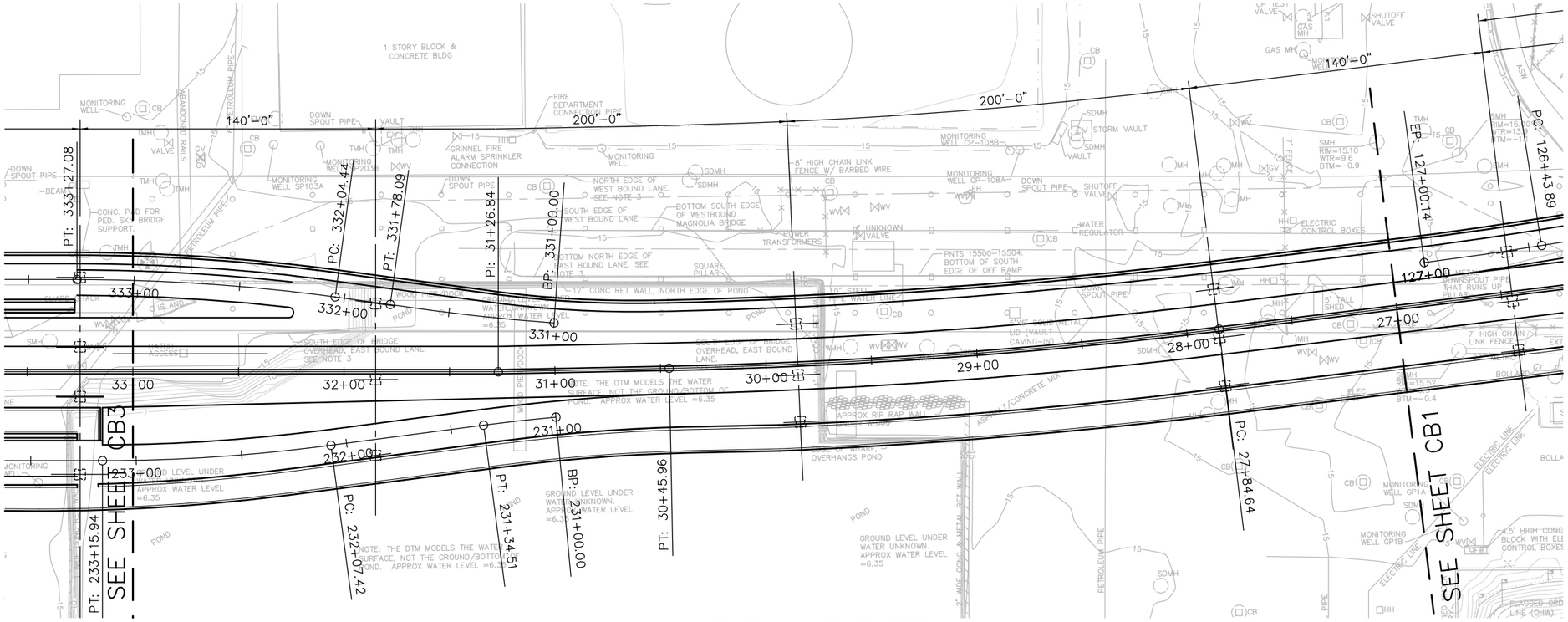

PLAN – MAINLINE

SCALE: 1" = 30'

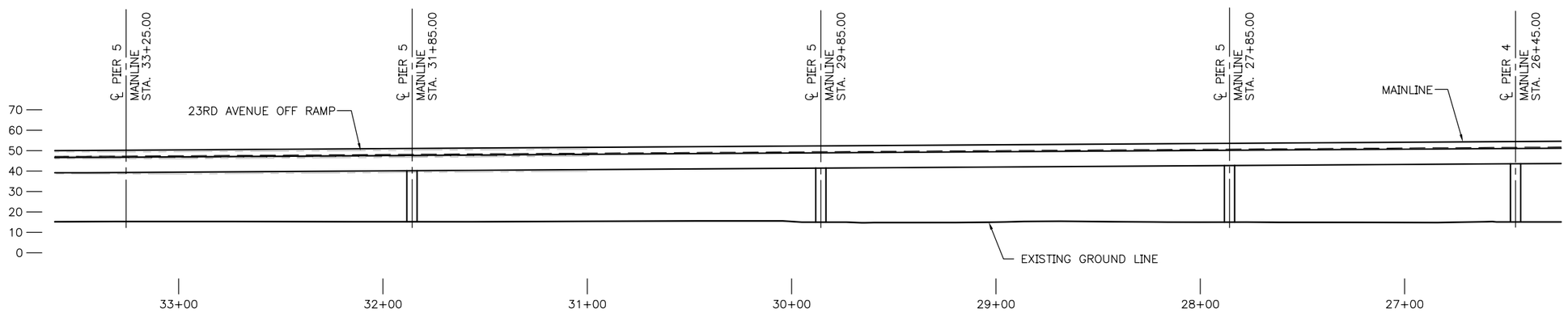

ELEVATION – MAINLINE

SCALE: 1" = 30'

CB2
PLAN AND ELEVATION

N:\36339\Drawings\Sheets\CONC_BOX_OPT1\CB_PLEL2.dwg
Nov/16/2006 9:46am

VAULT SERIAL NO. ????	MARK	DATE	MADE / CHK'D / REV'D	DESCRIPTION

REVISIONS

HNTB

HNTB Corporation
600 108th Avenue NE, Suite 900
Bellevue, WA 98004

Tel (425) 455-3555
Fax (425) 453-9179
www.hntb.com

APPROVED FOR ADVERTISING
KENNETH J. NAKATSU
DEPARTMENT OF EXECUTIVE ADMINISTRATION

SEATTLE, WASHINGTON . . . . . 20 . . .

BY: . . . . . .
DIRECTOR, CONTRACTING SERVICES

NAME OR INITIALS AND DATE	INITIALS AND DATE
DESIGNED	REVIEWED:
CHECKED	DES. . . . . SPU CONST. . . .
	SDOT. . . . . PROJ. MGR. . . .
DRAWN	RECEIVED . . . . .
CHECKED	REVISED AS BUILT . . . . .

ALL WORK DONE IN ACCORDANCE WITH THE CITY OF SEATTLE STANDARD PLANS AND SPECIFICATIONS AND OTHER DOCUMENTS CALLED FOR IN SECTION 0-02.3 OF THE PROJECT MANUAL.

City of Seattle
SEATTLE DEPARTMENT OF TRANSPORTATION

ORDINANCE NO. . . . . APPROVED . . . . . .
FUND: . . . . . .
SCALE: H. V. INSPECTOR'S BOOK. . . . . .

MAGNOLIA BRIDGE REPLACEMENT TYPE, SIZE, AND LOCATION CONCRETE BOX ALTERNATE

JOB NO.		
	PC	XXXXX
	R/W	XXXXX
	CO	XXXXX

VAULT PLAN NO. ???–???

SHEET XX OF ?

REGION NO.	STATE	FEDERAL AID PROJECT NO.	SHEET NO.
10	WA		

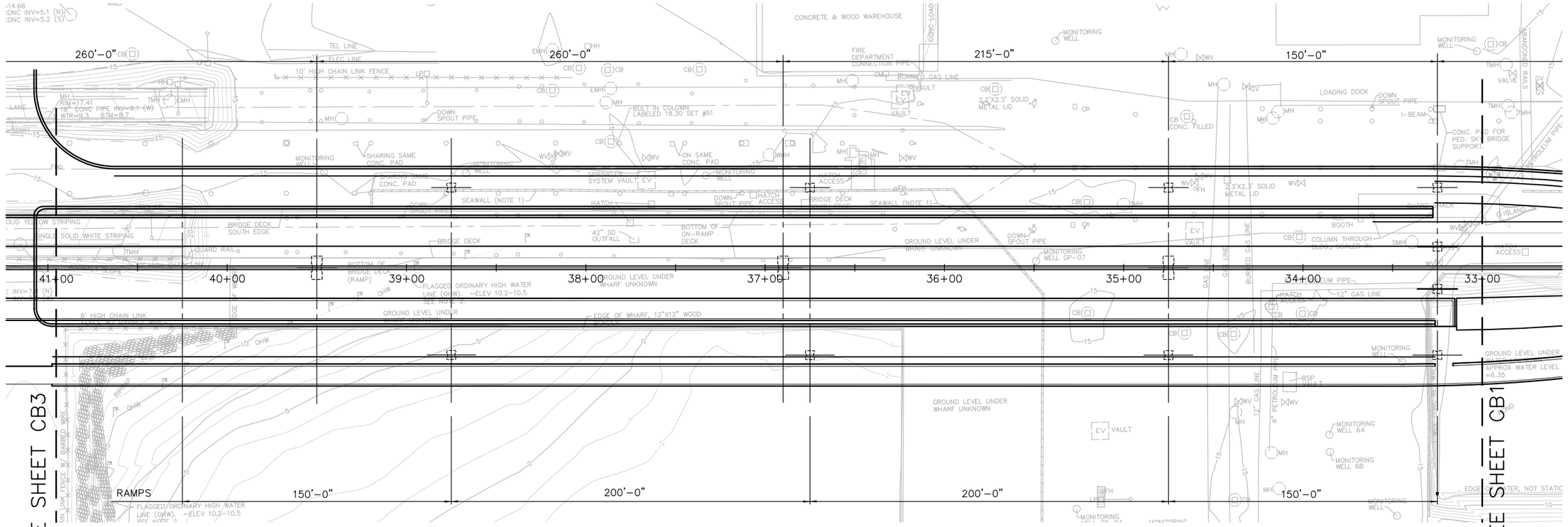

PLAN – MAINLINE

SCALE: 1" = 30'

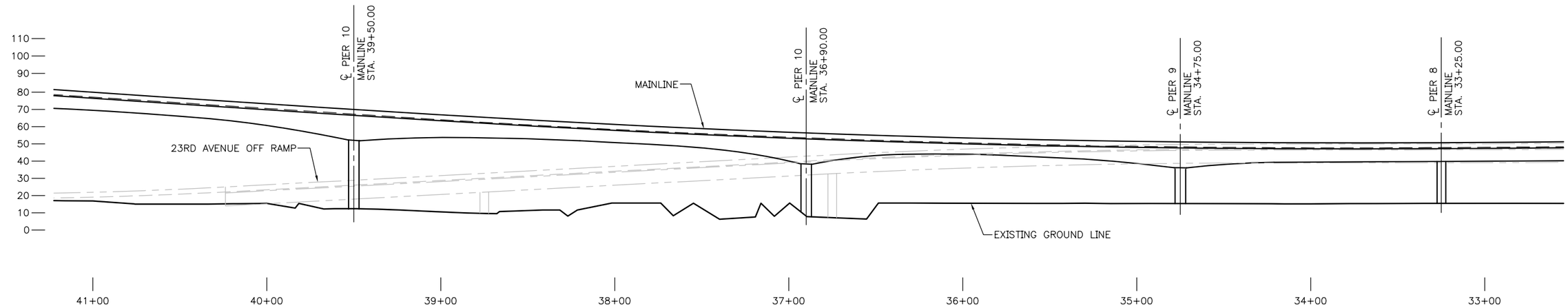

ELEVATION – MAINLINE

SCALE: 1" = 30'

CB3
PLAN AND ELEVATION

N:\36339\Drawings\Sheets\CONC_BOX_OPT1\CB_PLEL3.dwg
Nov/16/2006 9:47am

VAULT SERIAL NO. ?????	MARK	DATE	MADE / CHK'D	REV'D	DESCRIPTION
REVISIONS					

HNTB

HNTB Corporation
600 108th Avenue NE, Suite 900
Bellevue, WA 98004

Tel (425) 455-3555
Fax (425) 453-9179
www.hntb.com

APPROVED FOR ADVERTISING
KENNETH J. NAKATSU
DEPARTMENT OF EXECUTIVE ADMINISTRATION

SEATTLE, WASHINGTON . . . . . 20 . . . .

BY: . . . . . .

DIRECTOR, CONTRACTING SERVICES

NAME OR INITIALS AND DATE	INITIALS AND DATE
DESIGNED	REVIEWED:
CHECKED	DES. SPU CONST.
	SDOT PROJ. MGR.
DRAWN	RECEIVED
CHECKED	REVISED AS BUILT

ALL WORK DONE IN ACCORDANCE WITH THE CITY OF SEATTLE STANDARD PLANS AND SPECIFICATIONS AND OTHER DOCUMENTS CALLED FOR IN SECTION 0-02.3 OF THE PROJECT MANUAL.

City of Seattle
SEATTLE DEPARTMENT OF TRANSPORTATION

ORDINANCE NO. . . . . APPROVED . . . . . .
FUND: . . . . . .
SCALE: H. V. INSPECTOR'S BOOK. . . . . .

MAGNOLIA BRIDGE REPLACEMENT
TYPE, SIZE, AND LOCATION

JOB NO.		
	PC	XXXXX
	R/W	XXXXX
	CO	XXXXX
VAULT PLAN NO.	???-???	
SHEET XX OF ?		

REGION NO.	STATE	FEDERAL AID PROJECT NO.	SHEET NO.
10	WA		

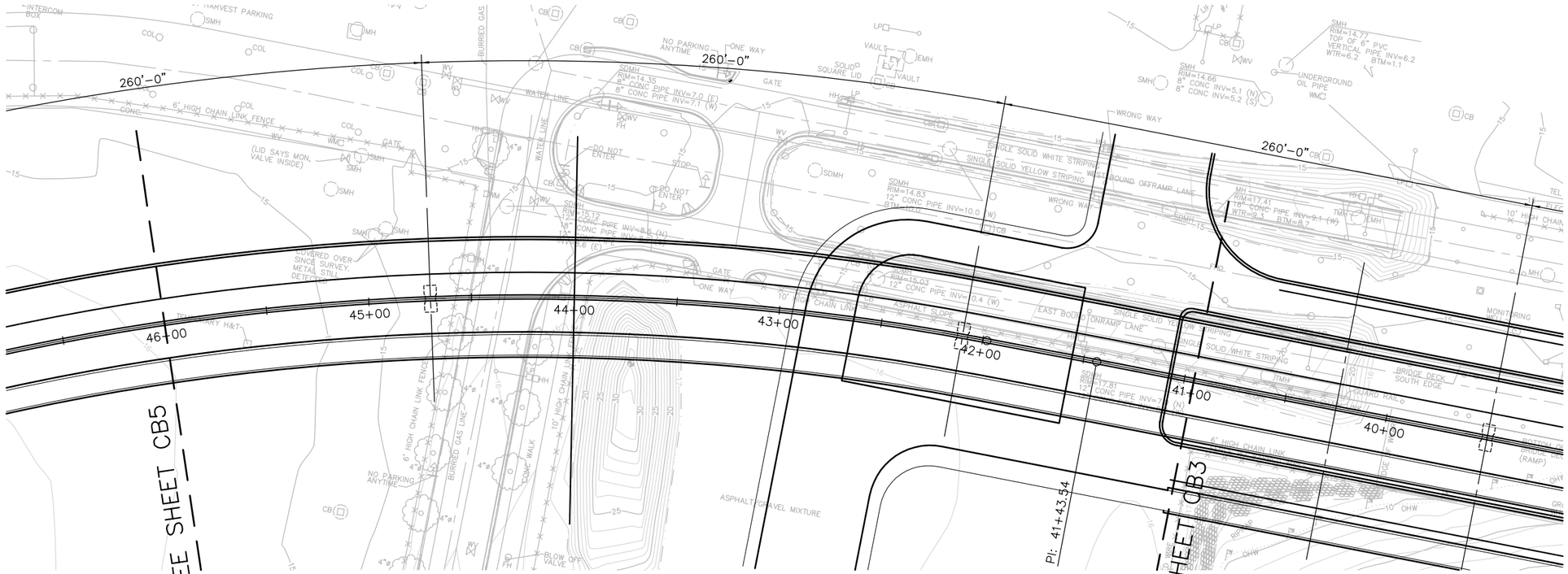

PLAN – MAINLINE

SCALE: 1" = 30'

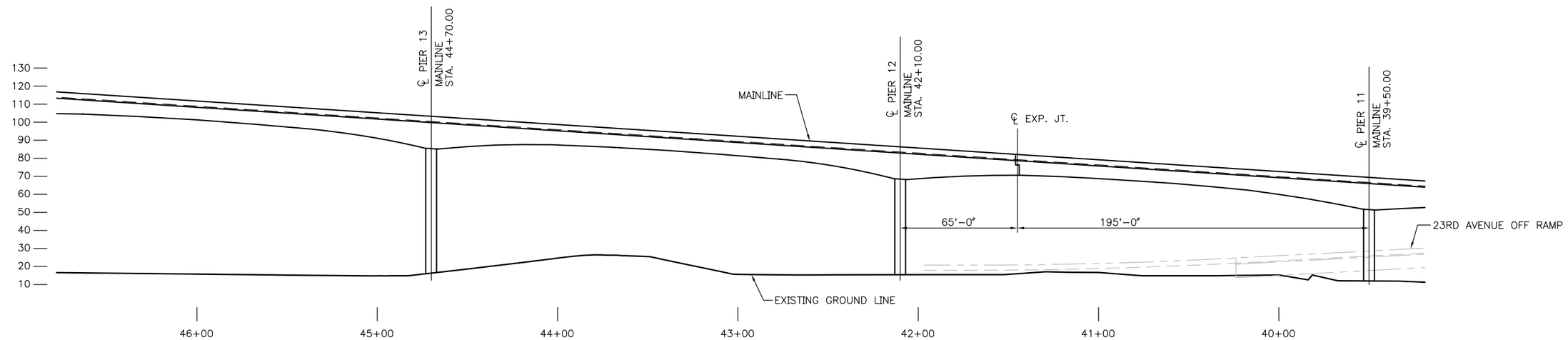

ELEVATION – MAINLINE

SCALE: 1" = 30'

CB4

PLAN AND ELEVATION

N:\36339\Drawings\Sheets\CONC_BOX_OPT1\CB_PLEL4.dwg
Nov/16/2006 10:02am

VAULT SERIAL NO. ????		
REVISIONS		
MARK	DATE	
MADE / CHK'D / REV'D		
DESCRIPTION		

HNTB

HNTB Corporation
600 108th Avenue NE, Suite 900
Bellevue, WA 98004

Tel (425) 455-3555
Fax (425) 453-9179
www.hntb.com

APPROVED FOR ADVERTISING
KENNETH J. NAKATSU
DEPARTMENT OF EXECUTIVE ADMINISTRATION

SEATTLE, WASHINGTON . . 20 .

BY: .

DIRECTOR, CONTRACTING SERVICES

NAME OR INITIALS AND DATE	INITIALS AND DATE
DESIGNED .	REVIEWED:
CHECKED .	DES. . SPU CONST. .
	SDOT. . PROJ. MGR. .
DRAWN .	RECEIVED .
CHECKED .	REVISED AS BUILT .

ALL WORK DONE IN ACCORDANCE WITH THE CITY OF SEATTLE STANDARD PLANS AND SPECIFICATIONS AND OTHER DOCUMENTS CALLED FOR IN SECTION 0-02.3 OF THE PROJECT MANUAL.

City of Seattle
SEATTLE DEPARTMENT
OF TRANSPORTATION

ORDINANCE NO. . . APPROVED .
FUND: .
SCALE: H. V. INSPECTOR'S BOOK.

MAGNOLIA BRIDGE REPLACEMENT
TYPE, SIZE, AND LOCATION
CONCRETE BOX ALTERNATE

JOB NO.		
	PC	XXXXX
	R/W	XXXXX
	CO	XXXXX

VAULT PLAN NO. ???-???

SHEET XX OF ?

REGION NO.	STATE	FEDERAL AID PROJECT NO.	SHEET NO.
10	WA		

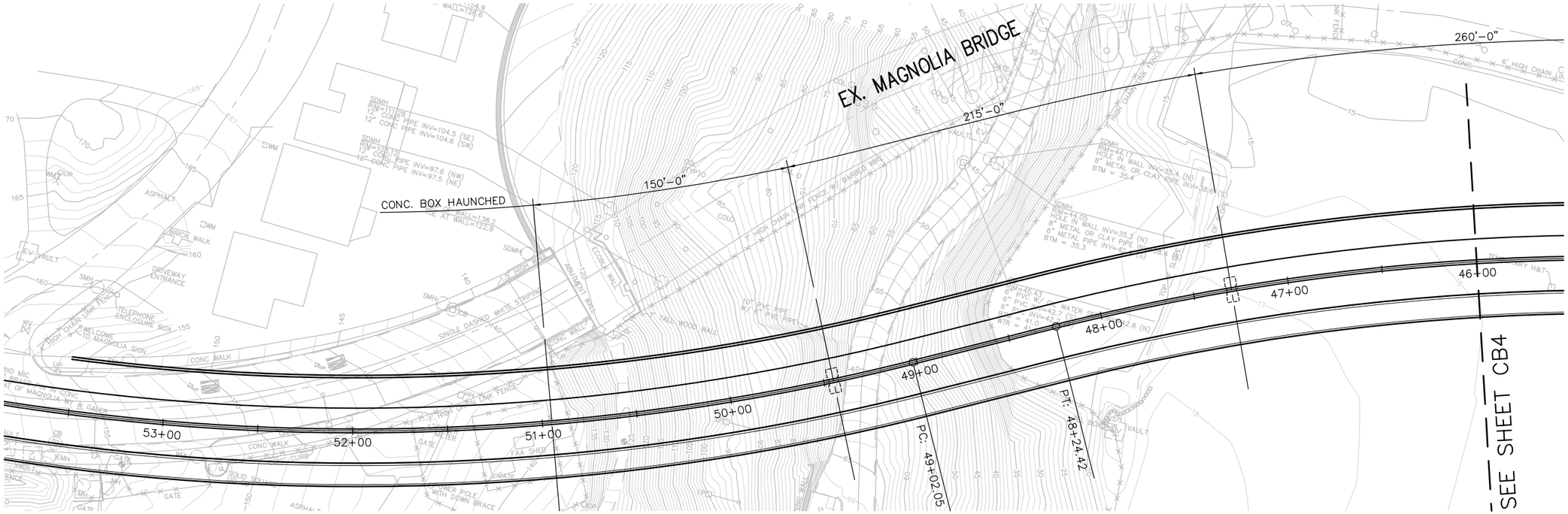

PLAN – MAINLINE
SCALE: 1" = 30'

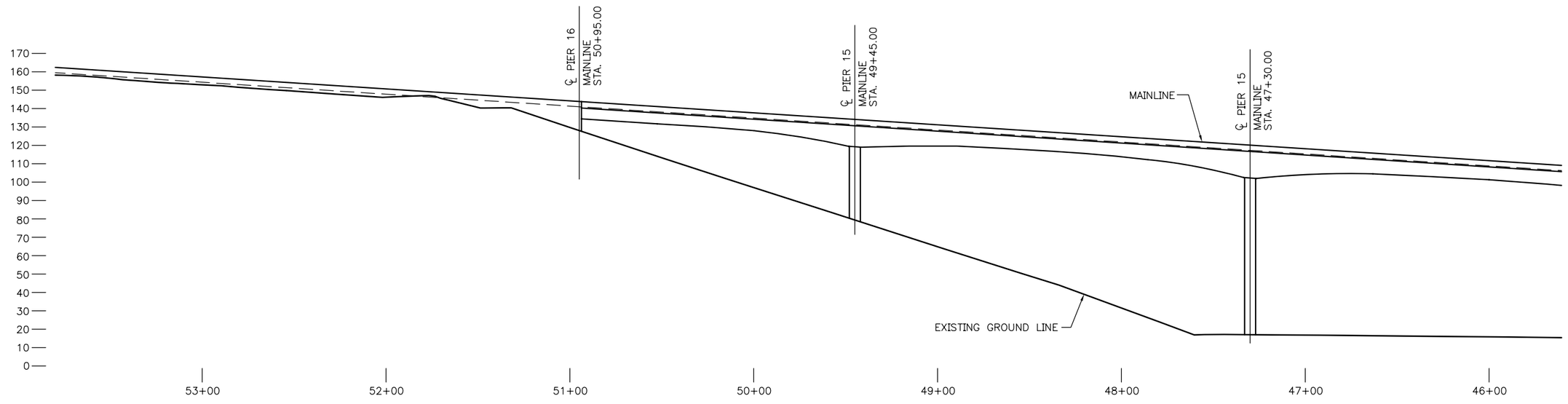

ELEVATION – MAINLINE
SCALE: 1" = 30'

CB5
PLAN AND ELEVATION

N:\36339\Drawings\Sheets\CONC_BOX_OPT1\CB_PLEL5.dwg
Nov/16/2006 10:04am

VAULT SERIAL NO. ????	REVISIONS			
	MARK	DATE	CHK'D	REV'D
	MADE			
	DESCRIPTION			

HNTB
HNTB Corporation
600 108th Avenue NE, Suite 900
Bellevue, WA 98004
Tel (425) 455-3555
Fax (425) 453-9179
www.hntb.com

APPROVED FOR ADVERTISING
KENNETH J. NAKATSU
DEPARTMENT OF EXECUTIVE ADMINISTRATION
SEATTLE, WASHINGTON . . 20 . .
BY: .
DIRECTOR, CONTRACTING SERVICES

NAME OR INITIALS AND DATE	INITIALS AND DATE
DESIGNED . CHECKED .	REVIEWED: DES. . SPU CONST. . SDOT. . PROJ. MGR. .
DRAWN. CHECKED.	RECEIVED .
	REVISED AS BUILT .

ALL WORK DONE IN ACCORDANCE WITH THE CITY OF SEATTLE STANDARD PLANS AND SPECIFICATIONS AND OTHER DOCUMENTS CALLED FOR IN SECTION 0-02.3 OF THE PROJECT MANUAL.

City of Seattle
SEATTLE DEPARTMENT
OF TRANSPORTATION

ORDINANCE NO. . APPROVED .
FUND: .
SCALE: H. V. INSPECTOR'S BOOK.

MAGNOLIA BRIDGE REPLACEMENT
TYPE, SIZE, AND LOCATION
CONCRETE BOX ALTERNATE

JOB NO.		
	PC	XXXXX
	R/W	XXXXX
	CO	XXXXX
VAULT PLAN NO. ???-???		
SHEET XX OF ?		

REGION NO.	STATE	FEDERAL AID PROJECT NO.	SHEET NO.
10	WA		

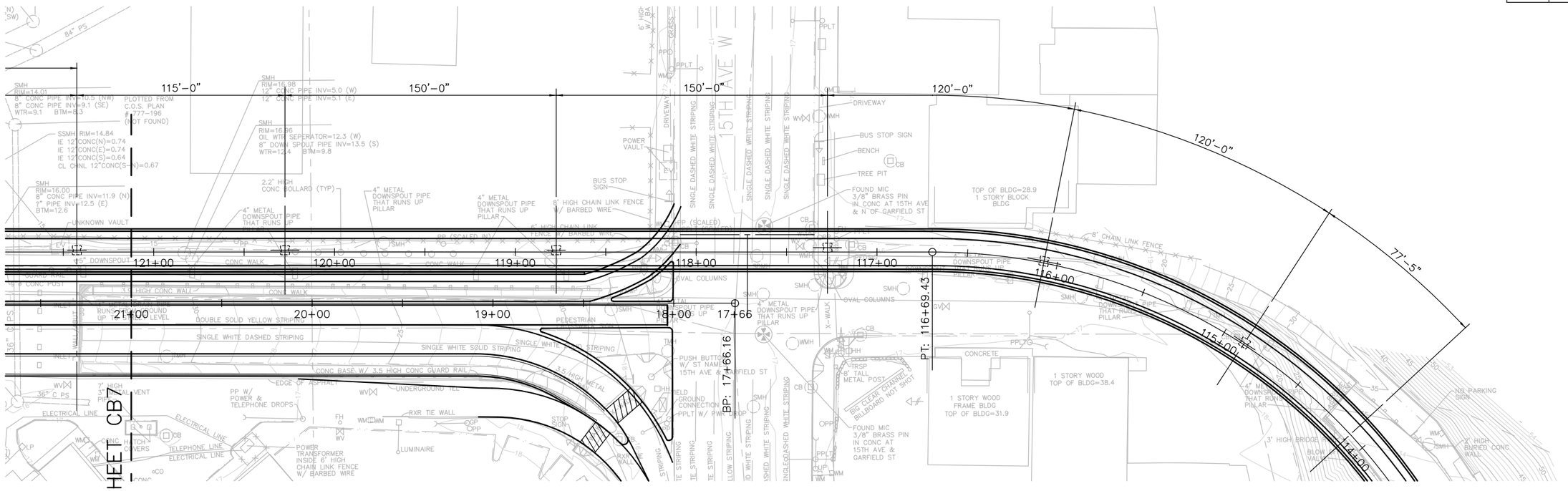

PLAN – 15TH AVENUE OVERPASS

SCALE: 1" = 30'

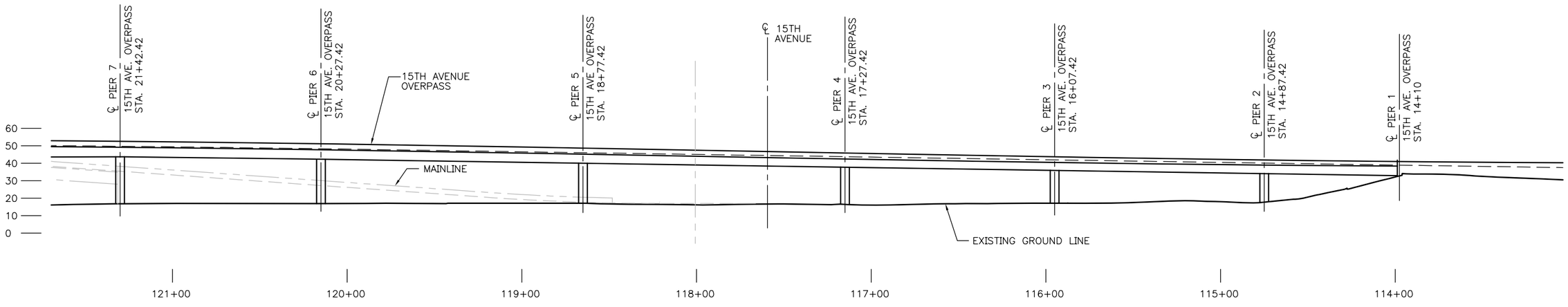

ELEVATION – 15TH AVENUE OVERPASS

SCALE: 1" = 30'

N:\36339\Drawings\Sheets\CONC_BOX_OPT1\CB_PLE6.dwg
Nov/16/2006 10:05am

CB6
PLAN AND ELEVATION

VAULT SERIAL NO. ????

MARK	DATE	CHK'D	REV'D	DESCRIPTION

REVISIONS

HNTB

HNTB Corporation
600 108th Avenue NE, Suite 900
Bellevue, WA 98004

Tel (425) 455-3555
Fax (425) 453-9179
www.hntb.com

APPROVED FOR ADVERTISING
KENNETH J. NAKATSU
DEPARTMENT OF EXECUTIVE ADMINISTRATION

SEATTLE, WASHINGTON . . . . . 20. . .

BY: . . . . . .

DIRECTOR, CONTRACTING SERVICES

NAME OR INITIALS AND DATE	INITIALS AND DATE
DESIGNED	REVIEWED:
CHECKED	DES. . . . . SPU CONST. . . .
	SDOT. . . . . PROJ. MGR. . . .
DRAWN.	RECEIVED . . . . .
CHECKED.	REVISED AS BUILT . . . . .

ALL WORK DONE IN ACCORDANCE WITH THE CITY OF SEATTLE STANDARD PLANS AND SPECIFICATIONS AND OTHER DOCUMENTS CALLED FOR IN SECTION 0-02.3 OF THE PROJECT MANUAL.

City of Seattle
SEATTLE DEPARTMENT OF TRANSPORTATION

ORDINANCE NO. . . . . APPROVED . . . . . .
FUND: . . . . . .
SCALE: H. V. INSPECTOR'S BOOK. . . . . .

MAGNOLIA BRIDGE REPLACEMENT TYPE, SIZE, AND LOCATION CONCRETE BOX ALTERNATE

JOB NO.		
	PC	XXXXX
	R/W	XXXXX
	CO	XXXXX

VAULT PLAN NO. ???–???

SHEET XX OF ?

REGION NO.	STATE	FEDERAL AID PROJECT NO.	SHEET NO.
10	WA		

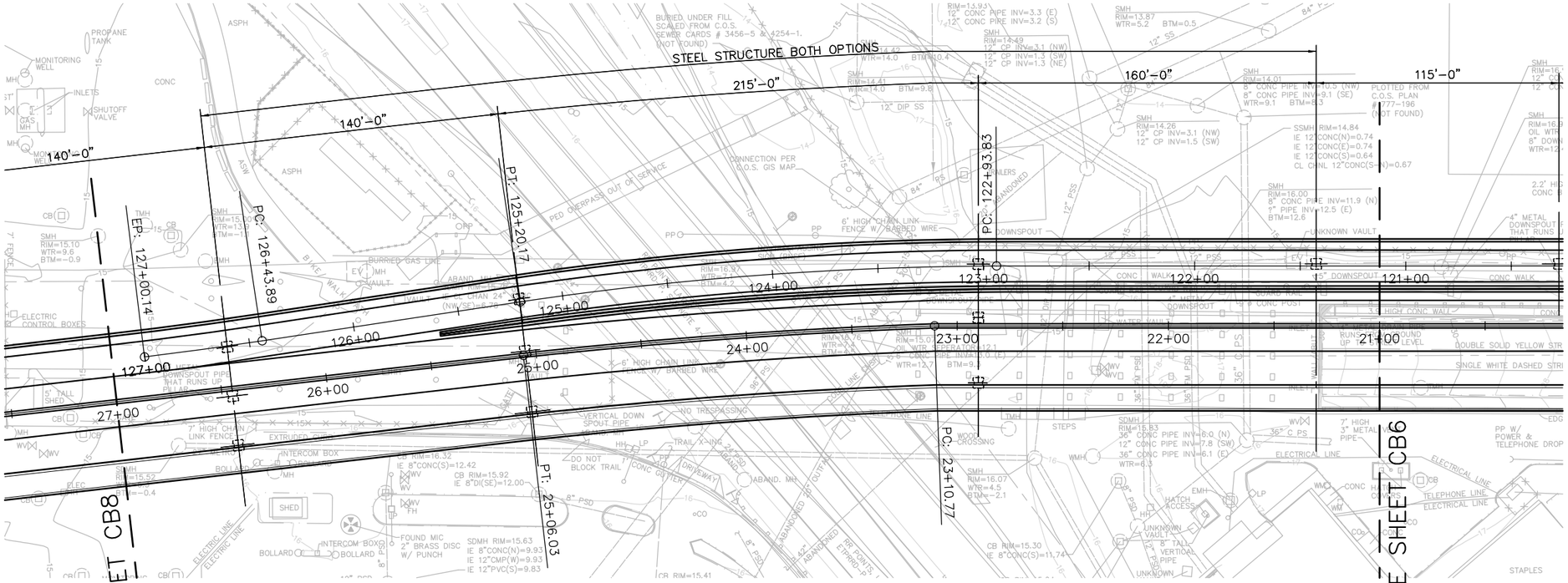

PLAN – 15TH AVENUE OVERPASS

SCALE: 1" = 30'

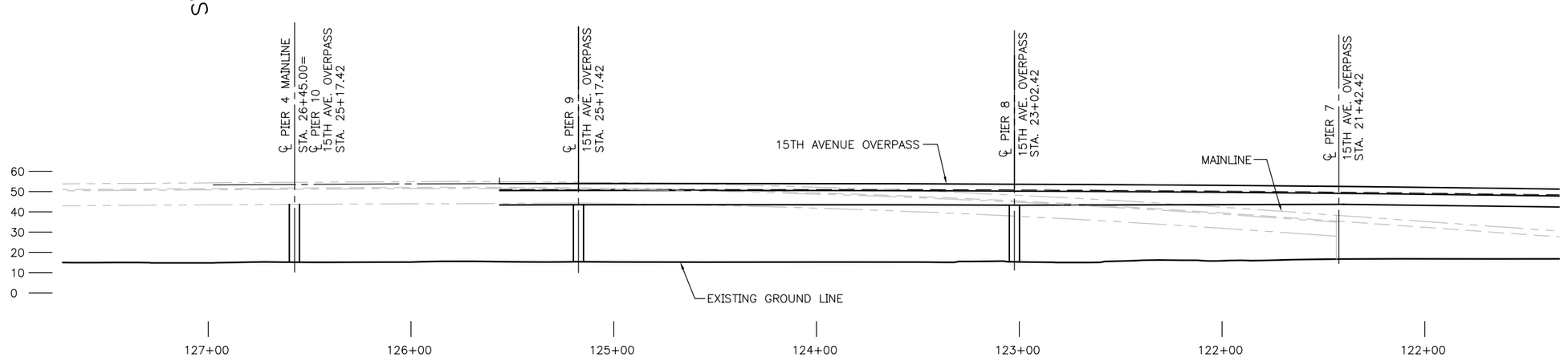

ELEVATION – 15TH AVENUE OVERPASS

SCALE: 1" = 30'

CB7
PLAN AND ELEVATION

N:\36339\Drawings\Sheets\CONC_BOX_OPT1\CB_PLEL7.dwg
Nov/16/2006 10:06am

VAULT SERIAL NO. ????	MARK	DATE	CHKD	REV'D
REVISIONS				
DESCRIPTION				

HNTB

HNTB Corporation
600 108th Avenue NE, Suite 900
Bellevue, WA 98004

Tel (425) 455-3555
Fax (425) 453-9179
www.hntb.com

APPROVED FOR ADVERTISING
KENNETH J. NAKATSU
DEPARTMENT OF EXECUTIVE ADMINISTRATION

SEATTLE, WASHINGTON . . . . . 20. . . .

BY: . . . . . .
DIRECTOR, CONTRACTING SERVICES

NAME OR INITIALS AND DATE	INITIALS AND DATE
DESIGNED	REVIEWED:
CHECKED	DES. . . . . SPU CONST. . . .
	SDOT. . . . . PROJ. MGR. . . .
DRAWN	RECEIVED . . . . .
CHECKED	REVISED AS BUILT . . . . .

ALL WORK DONE IN ACCORDANCE WITH THE CITY OF SEATTLE STANDARD PLANS AND SPECIFICATIONS AND OTHER DOCUMENTS CALLED FOR IN SECTION 0-02.3 OF THE PROJECT MANUAL.

City of Seattle
SEATTLE DEPARTMENT
OF TRANSPORTATION

ORDINANCE NO. . . . . APPROVED . . . . . .
FUND: . . . . . .
SCALE: H. V. INSPECTOR'S BOOK. . . . . .

MAGNOLIA BRIDGE REPLACEMENT
TYPE, SIZE, AND LOCATION
CONCRETE BOX ALTERNATE

JOB NO.		
	PC	XXXXX
	R/W	XXXXX
	CO	XXXXX

VAULT PLAN NO. ???–???

SHEET XX OF ?

REGION NO.	STATE	FEDERAL AID PROJECT NO.	SHEET NO.
10	WA		

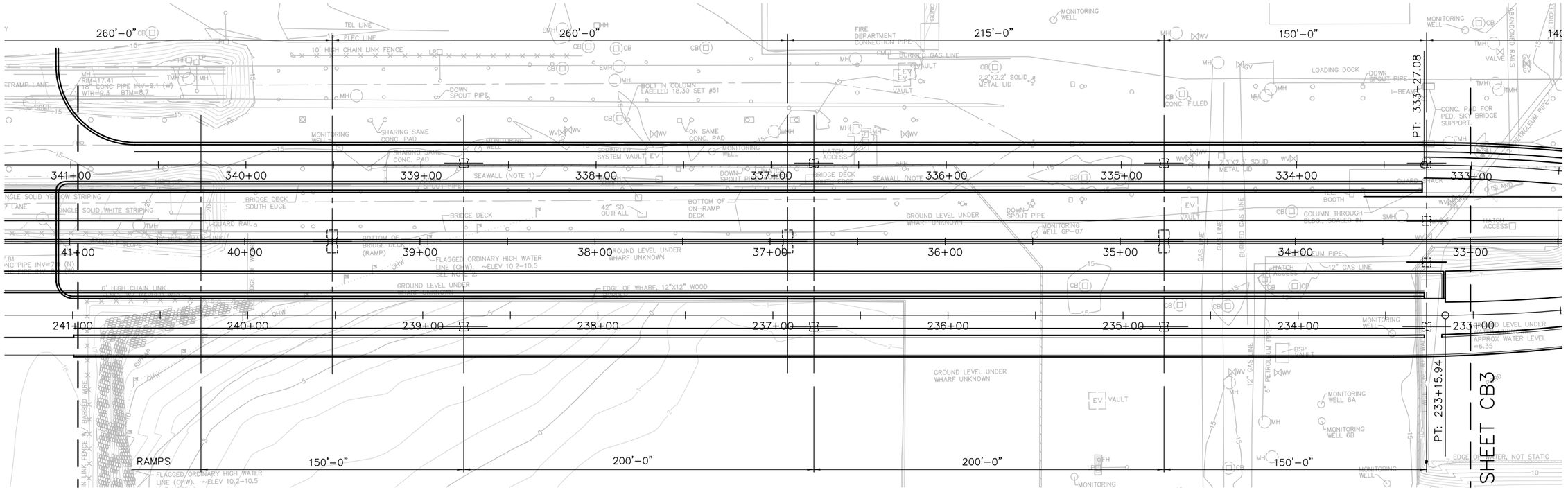

PLAN – 23RD OFF RAMP

SCALE: 1" = 30'

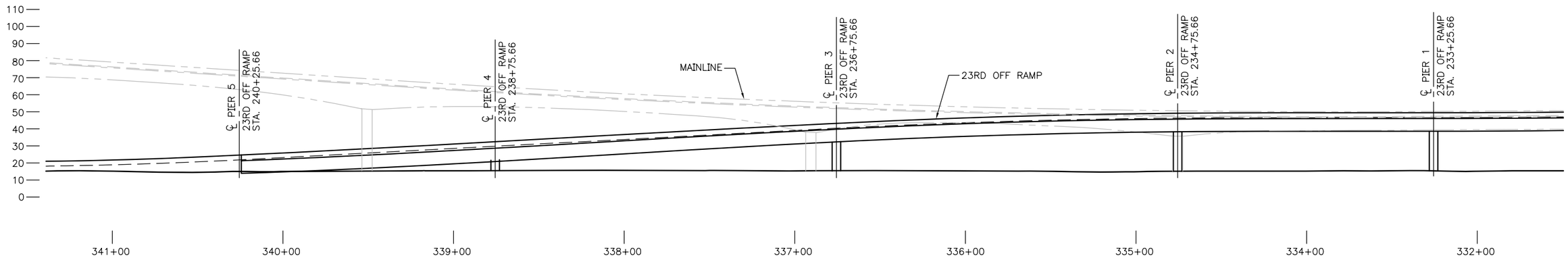

ELEVATION – 23RD OFF RAMP

SCALE: 1" = 30'

CB8

PLAN AND ELEVATION

N:\36339\Drawings\Sheets\CONC_BOX_OPT1\CB_PLEL8.dwg
Nov/16/2006 10:09am

VAULT SERIAL NO. ????	REVISIONS			
	MARK	DATE	CHK'D	REV'D
			MADE	DESCRIPTION

HNTB

HNTB Corporation
600 108th Avenue NE, Suite 900
Bellevue, WA 98004

Tel (425) 455-3555
Fax (425) 453-9179
www.hntb.com

APPROVED FOR ADVERTISING
KENNETH J. NAKATSU
DEPARTMENT OF EXECUTIVE ADMINISTRATION

SEATTLE, WASHINGTON . . . . . 20 . . .

BY: . . . . . .
DIRECTOR, CONTRACTING SERVICES

NAME OR INITIALS AND DATE	INITIALS AND DATE
DESIGNED	REVIEWED:
CHECKED	DES. . . . . SPU CONST. . . .
	SDOT. . . . . PROJ. MGR. . . .
DRAWN.	RECEIVED . . . . .
CHECKED.	REVISED AS BUILT . . . . .

ALL WORK DONE IN ACCORDANCE WITH THE CITY OF SEATTLE STANDARD PLANS AND SPECIFICATIONS AND OTHER DOCUMENTS CALLED FOR IN SECTION 0-02.3 OF THE PROJECT MANUAL.

City of Seattle
SEATTLE DEPARTMENT OF TRANSPORTATION

ORDINANCE NO. . . . . APPROVED . . . . . .
FUND: . . . . . .
SCALE: INSPECTOR'S BOOK. . . . . .

MAGNOLIA BRIDGE REPLACEMENT TYPE, SIZE, AND LOCATION CONCRETE BOX ALTERNATE

JOB NO.		
	PC	xxxxx
	R/W	xxxxx
	CO	xxxxx

VAULT PLAN NO. ???-???

SHEET XX OF ?

REGION NO.	STATE	FEDERAL AID PROJECT NO.	SHEET NO.
10	WA		

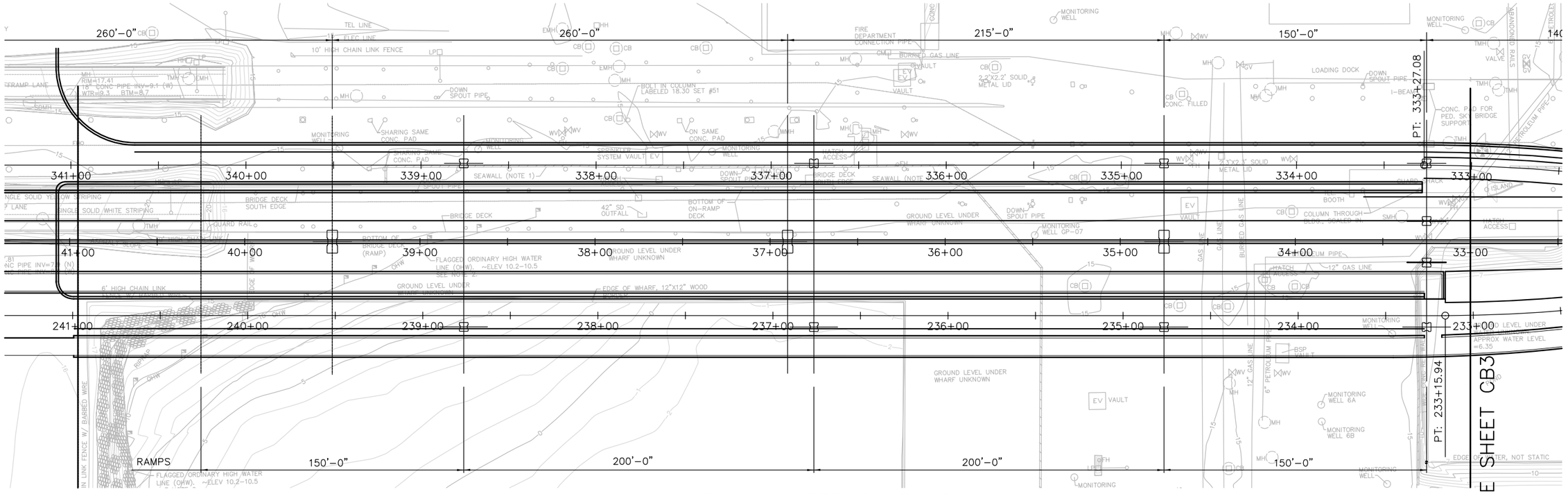

PLAN – 23RD ON RAMP

SCALE: 1" = 30'

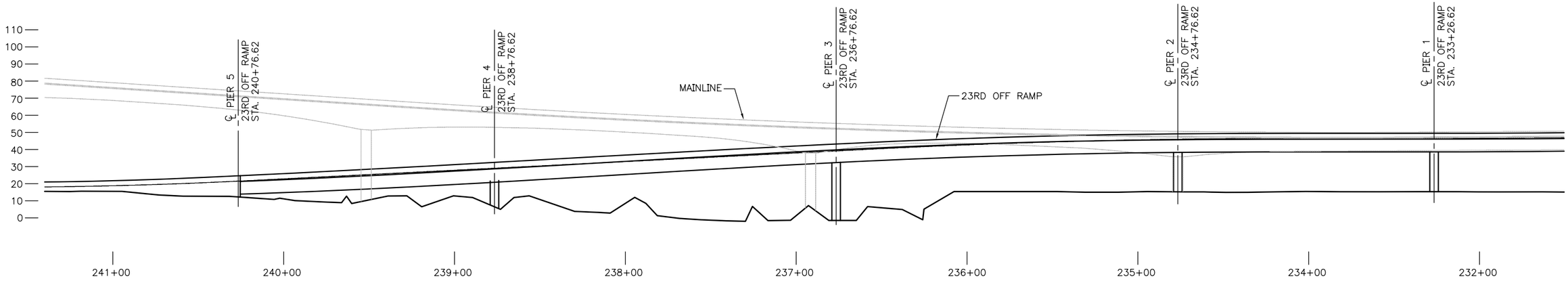

ELEVATION – 23RD ON RAMP

SCALE: 1" = 30'

CB9
PLAN AND ELEVATION

N:\36339\Drawings\Sheets\CONC_BOX_OPT1\CB_PLEL9.dwg
Nov/16/2006 10:11am

VAULT SHEET NO. ????	REVISIONS			
	MARK	DATE	MADE / CHKD	REV'D DESCRIPTION

HNTB

HNTB Corporation
600 108th Avenue NE, Suite 900
Bellevue, WA 98004

Tel (425) 455-3555
Fax (425) 453-9179
www.hntb.com

APPROVED FOR ADVERTISING
KENNETH J. NAKATSU
DEPARTMENT OF EXECUTIVE ADMINISTRATION

SEATTLE, WASHINGTON . . . . . 20. . . .

BY: . . . . . .
DIRECTOR, CONTRACTING SERVICES

NAME OR INITIALS AND DATE	INITIALS AND DATE
DESIGNED	REVIEWED:
CHECKED	DES. SPU CONST.
	SDOT PROJ. MGR.
DRAWN	RECEIVED
CHECKED	REVISED AS BUILT

ALL WORK DONE IN ACCORDANCE WITH THE CITY OF SEATTLE STANDARD PLANS AND SPECIFICATIONS AND OTHER DOCUMENTS CALLED FOR IN SECTION 0-02.3 OF THE PROJECT MANUAL.

City of Seattle
SEATTLE DEPARTMENT OF TRANSPORTATION

ORDINANCE NO. . . . . APPROVED . . . . . .
FUND: . . . . . .
SCALE: INSPECTOR'S BOOK. . . . . .

MAGNOLIA BRIDGE REPLACEMENT TYPE, SIZE, AND LOCATION CONCRETE BOX ALTERNATE

JOB NO.		
	PC	XXXXX
	R/W	XXXXX
	CO	XXXXX

VAULT PLAN NO. ???–???

SHEET XX OF ?

REGION NO.	STATE	FEDERAL AID PROJECT NO.	SHEET NO.
10	WA		

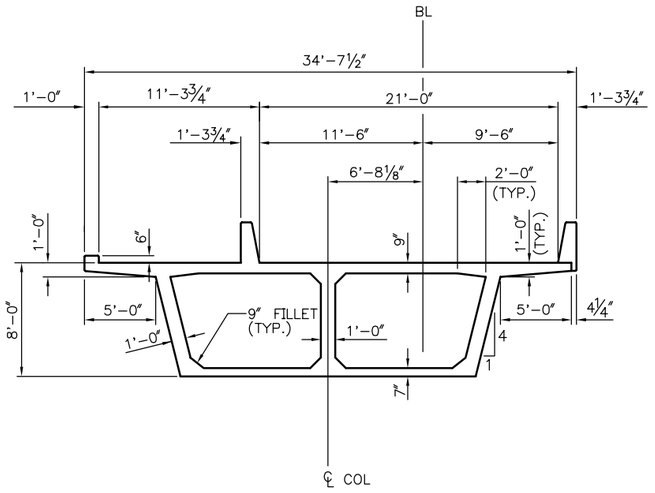

TYPICAL SECTION
23RD ON RAMP

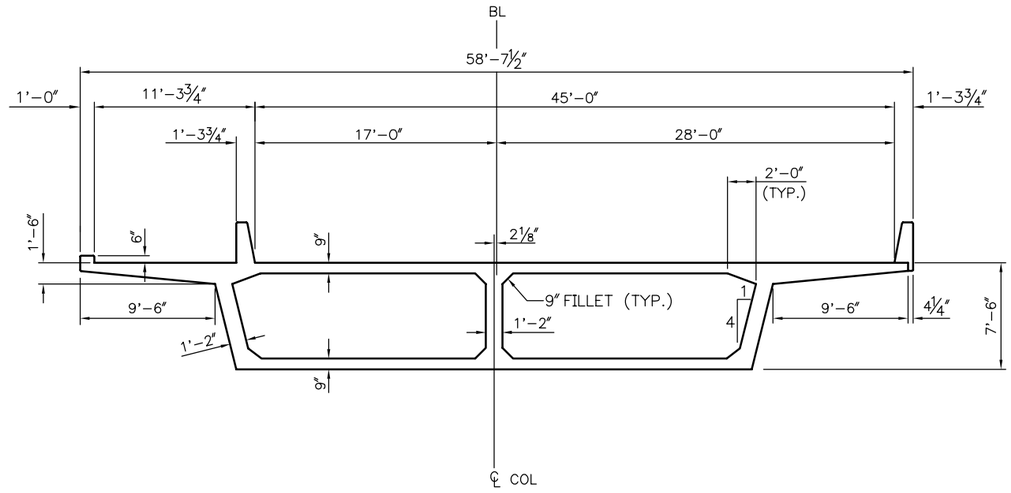

TYPICAL SECTION
MAINLINE AT MID-SPAN

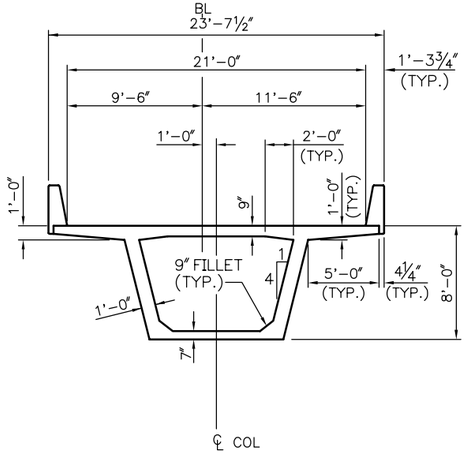

TYPICAL SECTION
23RD OFF RAMP

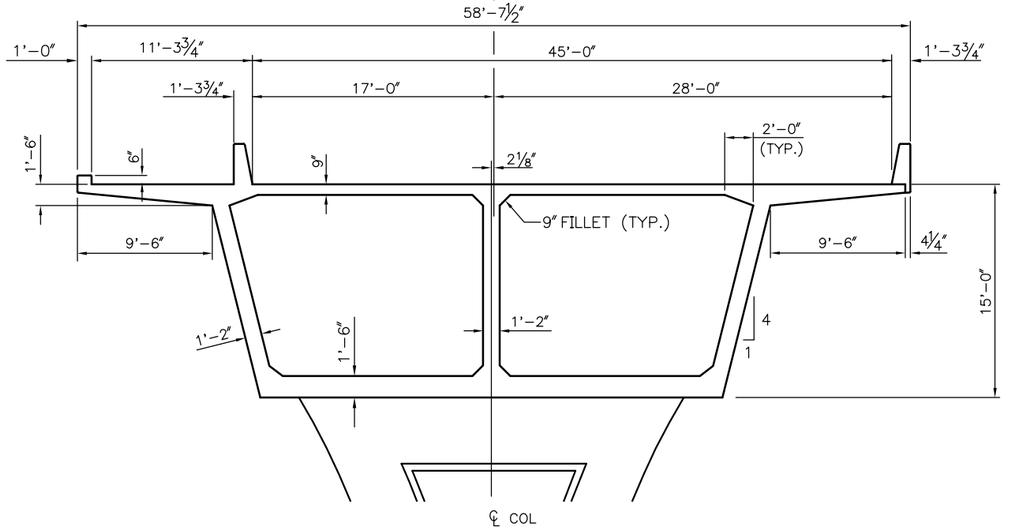

TYPICAL SECTION
MAINLINE AT PIER

CB10
TYPICAL SECTIONS

N:\36339\Drawings\Sheets\CONC_BOX_OPT1\CB_TSEC1.dwg
Nov/16/2006 10:11am

VAULT SEAL NO. ????	MARK	REVISIONS	DATE	MADE	CHKD	REVD	DESCRIPTION

HNTB

HNTB Corporation
600 108th Avenue NE, Suite 900
Bellevue, WA 98004

Tel (425) 455-3555
Fax (425) 453-9179
www.hntb.com

APPROVED FOR ADVERTISING
KENNETH J. NAKATSU
DEPARTMENT OF EXECUTIVE ADMINISTRATION

SEATTLE, WASHINGTON . . 20. .

BY: .
DIRECTOR, CONTRACTING SERVICES

NAME OR INITIALS AND DATE	INITIALS AND DATE
DESIGNED .	REVIEWED:
CHECKED .	DES. . SPU CONST. .
	SDOT. . PROJ. MGR. .
DRAWN.	RECEIVED .
CHECKED.	REVISED AS BUILT .

ALL WORK DONE IN ACCORDANCE WITH THE CITY OF SEATTLE STANDARD PLANS AND SPECIFICATIONS AND OTHER DOCUMENTS CALLED FOR IN SECTION 0-02.3 OF THE PROJECT MANUAL.

City of Seattle
SEATTLE DEPARTMENT
OF TRANSPORTATION

ORDINANCE NO. . . APPROVED .
FUND: .
SCALE: H. V. INSPECTOR'S BOOK.

MAGNOLIA BRIDGE REPLACEMENT
TYPE, SIZE, AND LOCATION
CONCRETE BOX ALTERNATIVE

JOB NO.		
	PC	XXXXX
	R/W	XXXXX
	CO	XXXXX
VAULT PLAN NO.		???-???
SHEET XX OF ?		

REGION NO.	STATE	FEDERAL AID PROJECT NO.	SHEET NO.
10	WA		

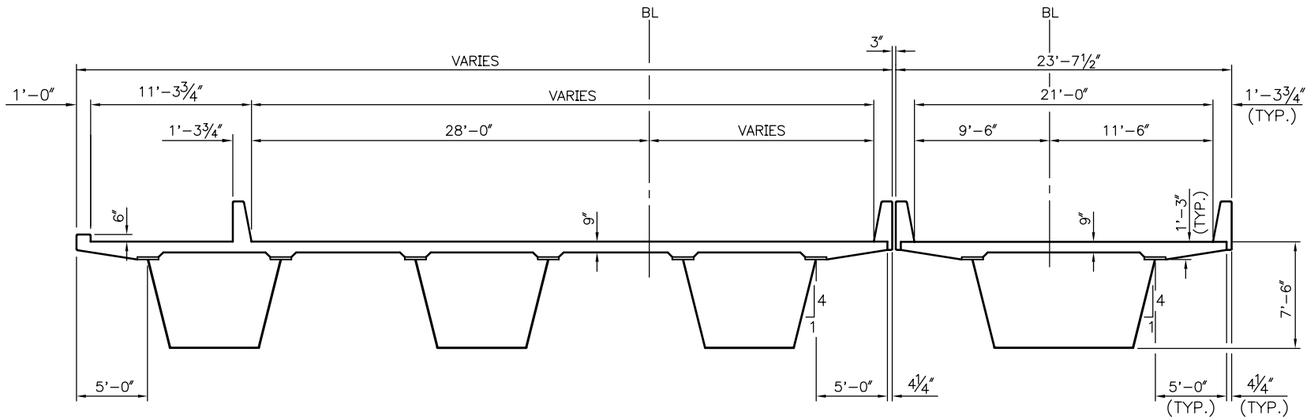

TYPICAL SECTION
OVER RAILROAD

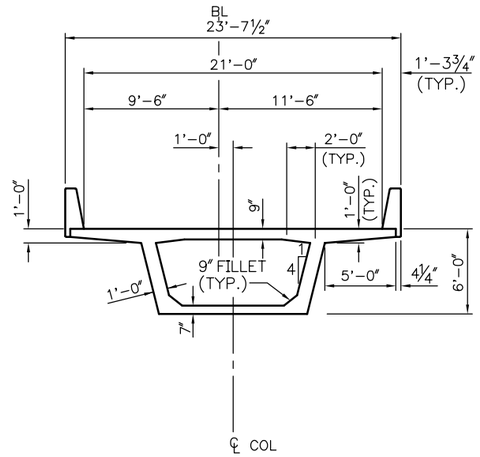

TYPICAL SECTION
15TH AVE. OVERPASS

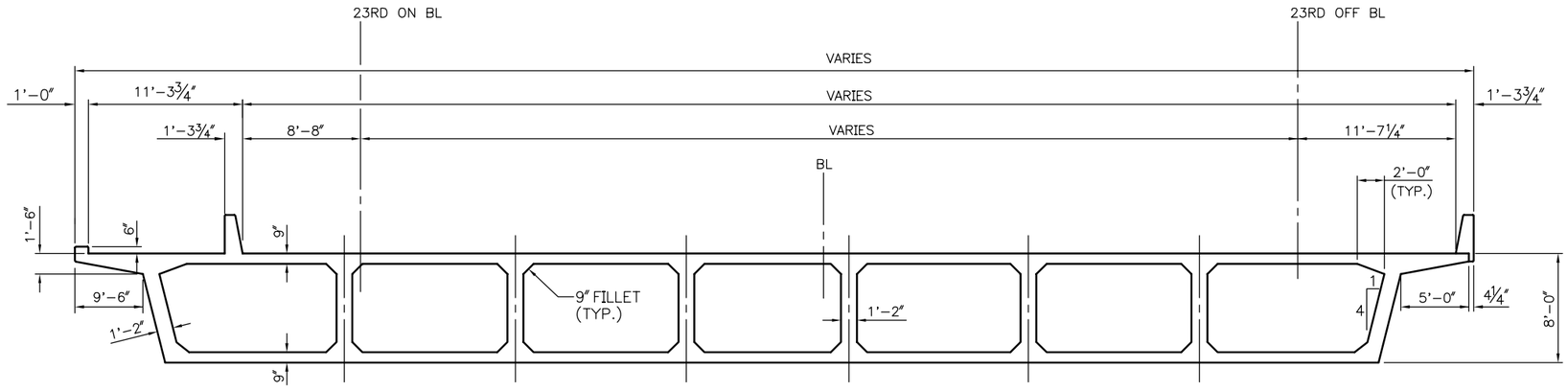

TYPICAL SECTION
MAINLINE AT LOW LEVEL

N:\36339\Drawings\Sheets\CONC_BOX_OPT1\CB_TSEC2.dwg
Nov/16/2006 10:12am

CB11
TYPICAL SECTIONS

VAULT SERIAL NO. ????	MARK	DATE	MADE	CHK'D	REV'D	DESCRIPTION

REVISIONS

HNTB
HNTB Corporation
600 108th Avenue NE, Suite 900
Bellevue, WA 98004
Tel (425) 455-3555
Fax (425) 453-9179
www.hntb.com

APPROVED FOR ADVERTISING
KENNETH J. NAKATSU
DEPARTMENT OF EXECUTIVE ADMINISTRATION
SEATTLE, WASHINGTON . . . 20 . .
BY: . .
DIRECTOR, CONTRACTING SERVICES

NAME OR INITIALS AND DATE	INITIALS AND DATE
DESIGNED . CHECKED .	REVIEWED: DES. . SPU CONST. . SDOT. . PROJ. MGR. .
DRAWN. CHECKED.	RECEIVED .
	REVISED AS BUILT .

ALL WORK DONE IN ACCORDANCE WITH THE CITY OF SEATTLE STANDARD PLANS AND SPECIFICATIONS AND OTHER DOCUMENTS CALLED FOR IN SECTION 0-02.3 OF THE PROJECT MANUAL.

City of Seattle
SEATTLE DEPARTMENT
OF TRANSPORTATION

ORDINANCE NO. . APPROVED .
FUND: .
SCALE: H. V. INSPECTOR'S BOOK.

MAGNOLIA BRIDGE REPLACEMENT
TYPE, SIZE, AND LOCATION
CONCRETE BOX ALTERNATIVE

JOB NO.		
	PC	XXXXX
	R/W	XXXXX
	CO	XXXXX

VAULT PLAN NO. ???–???

SHEET XX OF ?

REGION NO.	STATE	FEDERAL AID PROJECT NO.	SHEET NO.
10	WA		

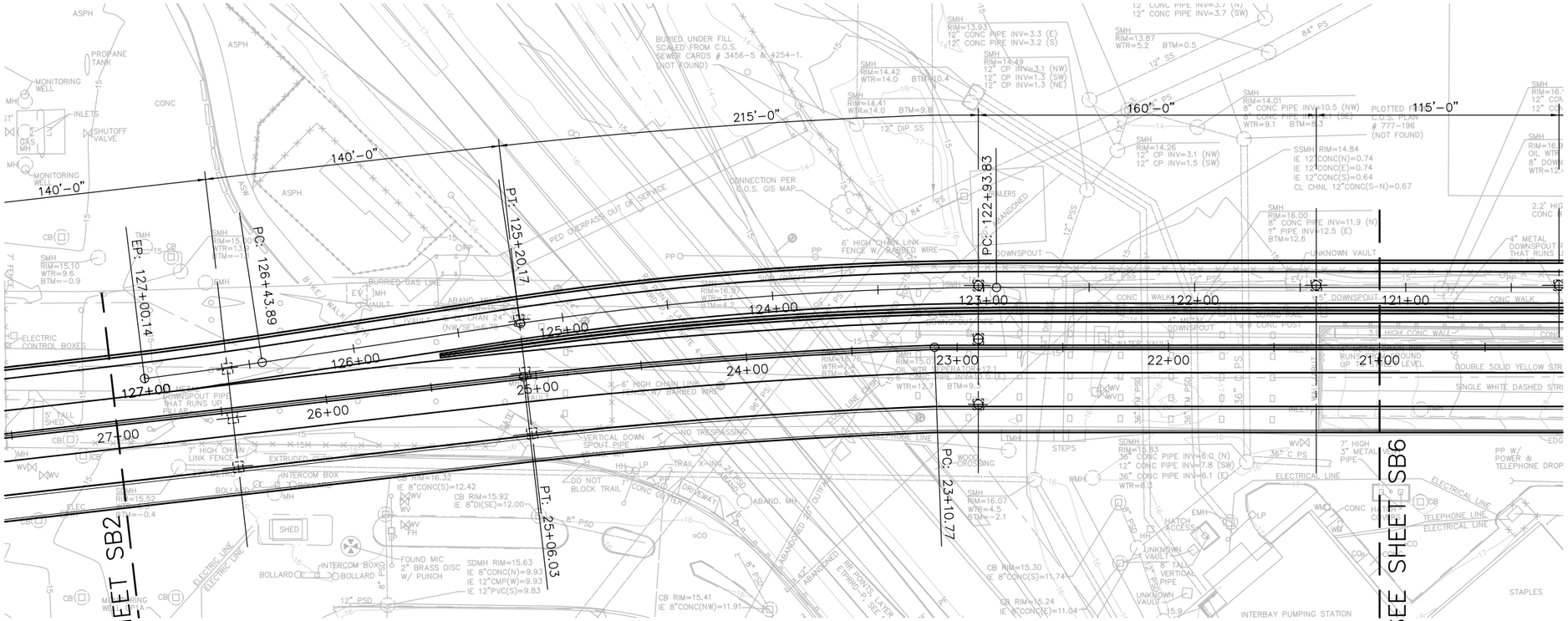

PLAN – MAINLINE
SCALE: 1" = 30'

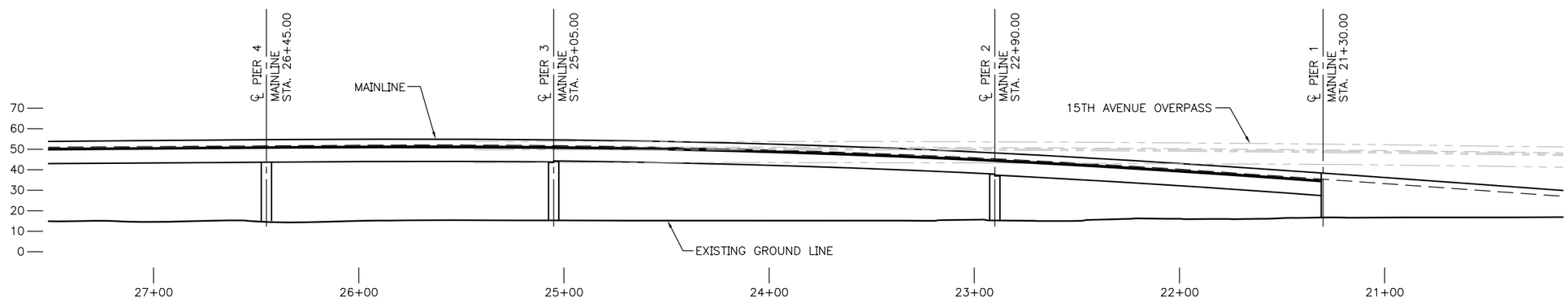

ELEVATION – MAINLINE
SCALE: 1" = 30'

SB1
PLAN AND ELEVATION

N:\36339\Drawings\Sheets\STEEL_BOX\SB_PLEL1.dwg
Nov/16/2006 10:25am

VAULT SEQ# NO. ????	MARK	DATE	(CHKD)	REV'D
REVISIONS				
DESCRIPTION				

HNTB

HNTB Corporation
600 108th Avenue NE, Suite 900
Bellevue, WA 98004

Tel (425) 455-3555
Fax (425) 453-9179
www.hntb.com

APPROVED FOR ADVERTISING
KENNETH J. NAKATSU
DEPARTMENT OF EXECUTIVE ADMINISTRATION

SEATTLE, WASHINGTON . . . . . 20. . . .

BY: . . . . . .
DIRECTOR, CONTRACTING SERVICES

NAME OR INITIALS AND DATE	INITIALS AND DATE
DESIGNED	REVIEWED:
CHECKED	DES. . . . . SPU CONST. . . .
	SDOT. . . . . PROJ. MGR. . . .
DRAWN	RECEIVED . . . . .
CHECKED	REVISED AS BUILT . . . . .

ALL WORK DONE IN ACCORDANCE WITH THE CITY OF SEATTLE STANDARD PLANS AND SPECIFICATIONS AND OTHER DOCUMENTS CALLED FOR IN SECTION 0-02.3 OF THE PROJECT MANUAL.

City of Seattle
SEATTLE DEPARTMENT OF TRANSPORTATION

ORDINANCE NO. . . . . APPROVED . . . . . .
FUND: . . . . . .
SCALE: H. V. INSPECTOR'S BOOK. . . . . .

MAGNOLIA BRIDGE REPLACEMENT
TYPE, SIZE, AND LOCATION
STEEL BOX ALTERNATE

JOB NO.
PC XXXXX
R/W XXXXX
CO XXXXX

VAULT PLAN NO. ???–???

SHEET XX OF ?

REGION NO.	STATE	FEDERAL AID PROJECT NO.	SHEET NO.
10	WA		

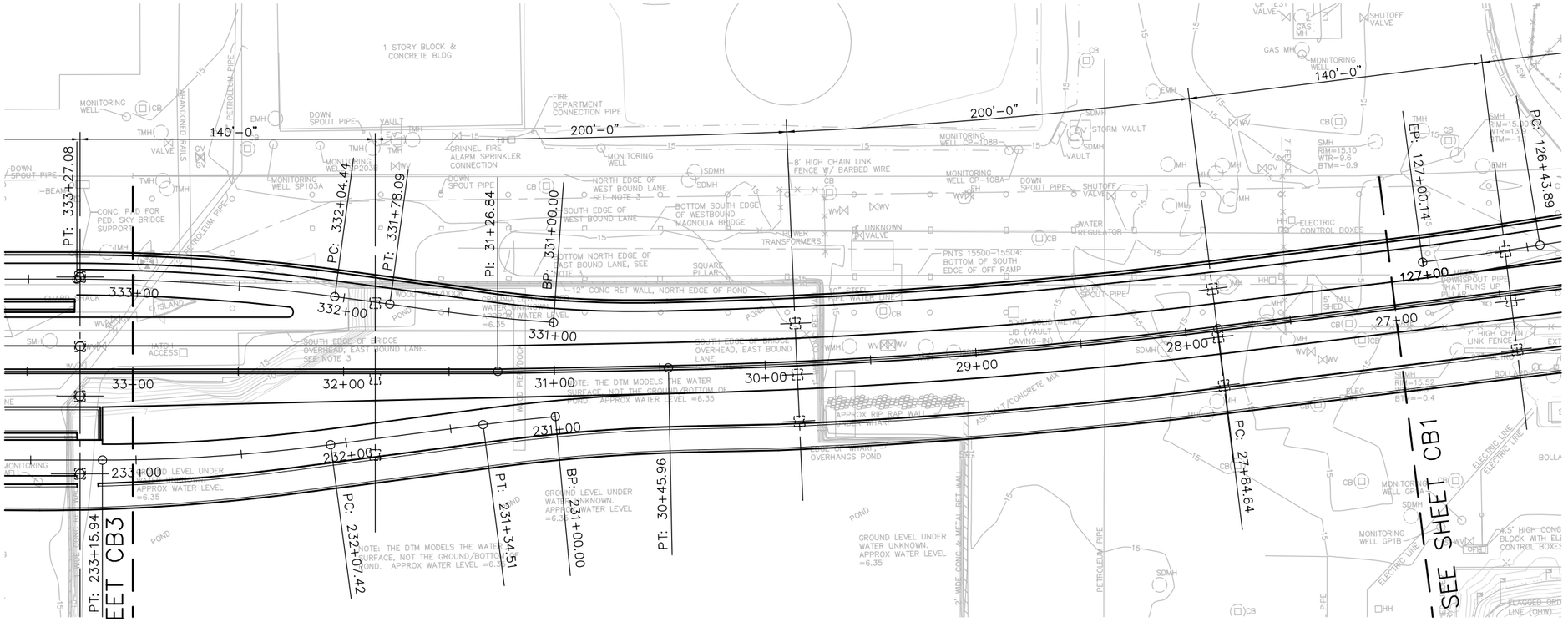

PLAN – MAINLINE

SCALE: 1" = 30'

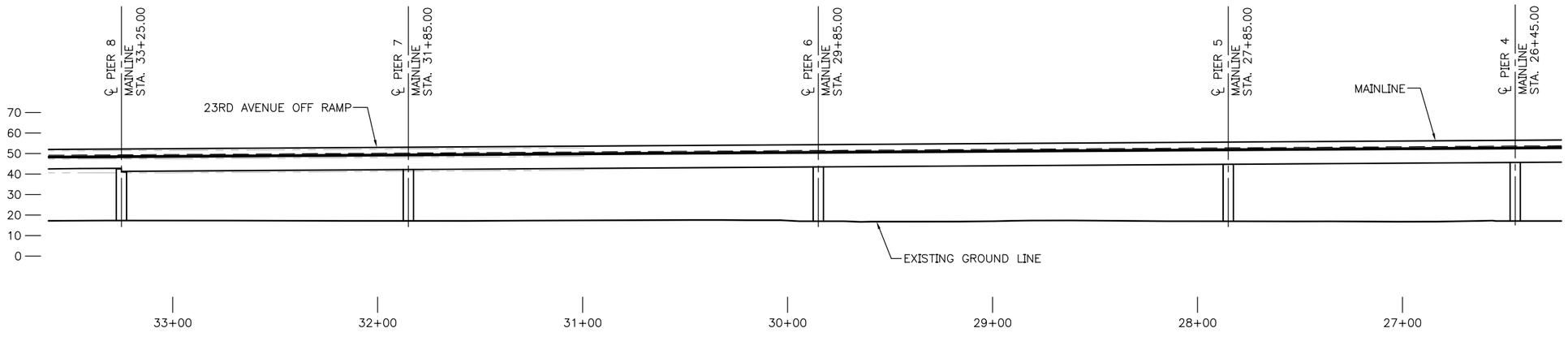

ELEVATION – MAINLINE

SCALE: 1" = 30'

SB2
PLAN AND ELEVATION

N:\36339\Drawings\Sheets\STEEL_BOX\SB_PLE12.dwg
Nov/16/2006 10:27am

VAULT SERIAL NO. ????	REVISIONS			
	MARK	DATE	MADE / CHK'D	REV'D
			DESCRIPTION	

HNTB

HNTB Corporation
600 108th Avenue NE, Suite 900
Bellevue, WA 98004

Tel (425) 455-3555
Fax (425) 453-9179
www.hntb.com

APPROVED FOR ADVERTISING
KENNETH J. NAKATSU
DEPARTMENT OF EXECUTIVE ADMINISTRATION

SEATTLE, WASHINGTON . . . . . 20 . . .

BY: . . . . . .

DIRECTOR, CONTRACTING SERVICES

NAME OR INITIALS AND DATE	INITIALS AND DATE
DESIGNED	REVIEWED:
CHECKED	DES. . . . . SPU CONST. . . .
	SDOT. . . . . PROJ. MGR. . . .
DRAWN.	RECEIVED . . . . .
CHECKED.	REVISED AS BUILT . . . . .

ALL WORK DONE IN ACCORDANCE WITH THE CITY OF SEATTLE STANDARD PLANS AND SPECIFICATIONS AND OTHER DOCUMENTS CALLED FOR IN SECTION 0-02.3 OF THE PROJECT MANUAL.

City of Seattle
SEATTLE DEPARTMENT OF TRANSPORTATION

ORDINANCE NO. . . . . APPROVED . . . . . .
FUND: . . . . . .
SCALE: H. V. INSPECTOR'S BOOK. . . . . .

MAGNOLIA BRIDGE REPLACEMENT TYPE, SIZE, AND LOCATION STEEL BOX ALTERNATE

JOB NO.		
	PC	XXXXX
	R/W	XXXXX
	CO	XXXXX

VAULT PLAN NO. ???–???

SHEET XX OF ?

REGION NO.	STATE	FEDERAL AID PROJECT NO.	SHEET NO.
10	WA		

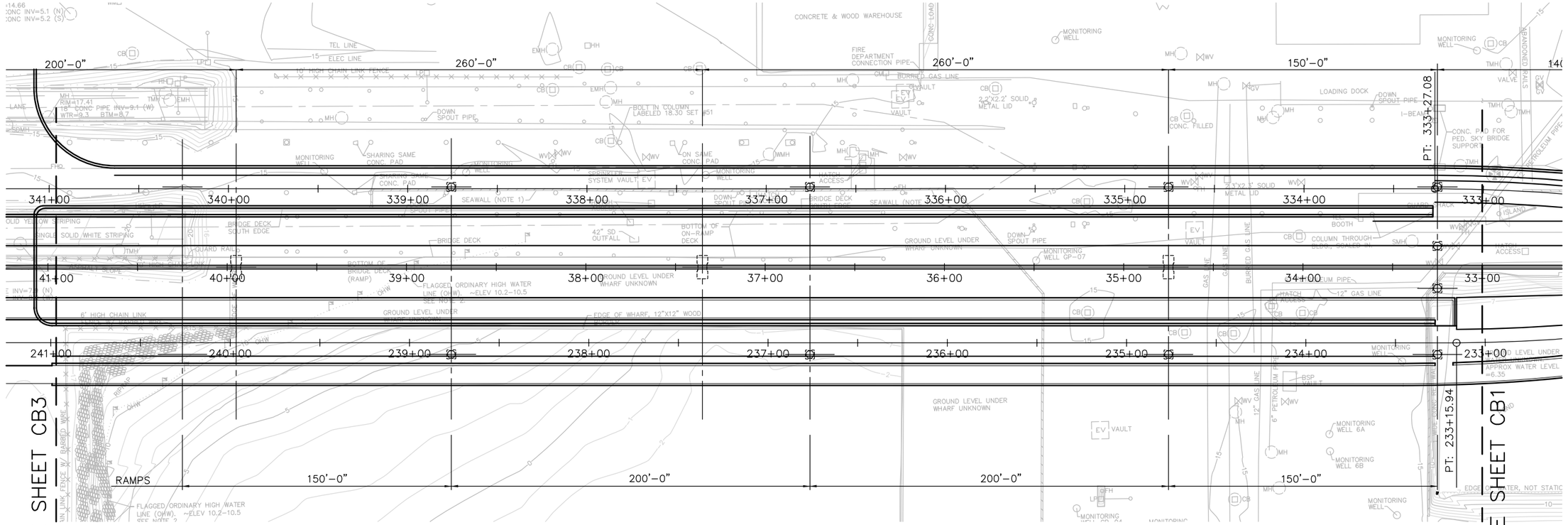

PLAN – MAINLINE

SCALE: 1" = 30'

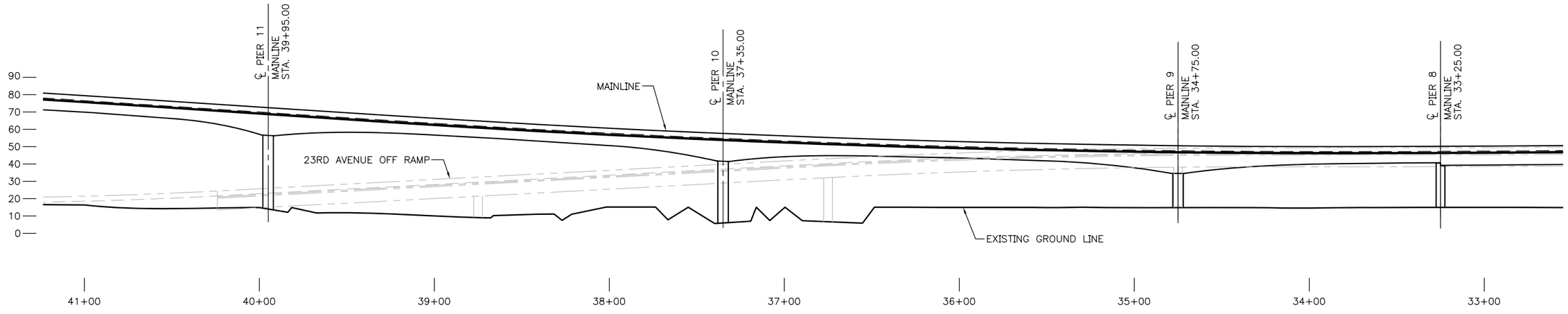

ELEVATION – MAINLINE

SCALE: 1" = 30'

SB3

PLAN AND ELEVATION

N:\36339\Drawings\Sheets\STEEL_BOX\SB_PLEL3.dwg
Nov/16/2006 10:28am

VAULT SERIAL NO. ????	REVISIONS			
	MARK	DATE	MADE	CHK'D	REV'D DESCRIPTION

HNTB

HNTB Corporation
600 108th Avenue NE, Suite 900
Bellevue, WA 98004

Tel (425) 455-3555
Fax (425) 453-9179
www.hntb.com

APPROVED FOR ADVERTISING
KENNETH J. NAKATSU
DEPARTMENT OF EXECUTIVE ADMINISTRATION

SEATTLE, WASHINGTON . . . . . 20. . . .

BY: . . . . . .
DIRECTOR, CONTRACTING SERVICES

NAME OR INITIALS AND DATE	INITIALS AND DATE
DESIGNED	REVIEWED:
CHECKED	DES. SPU CONST.
	SDOT PROJ. MGR.
DRAWN	RECEIVED
CHECKED	REVISED AS BUILT

ALL WORK DONE IN ACCORDANCE WITH THE CITY OF SEATTLE STANDARD PLANS AND SPECIFICATIONS AND OTHER DOCUMENTS CALLED FOR IN SECTION 0-02.3 OF THE PROJECT MANUAL.

City of Seattle
SEATTLE DEPARTMENT OF TRANSPORTATION

ORDINANCE NO. . . . . APPROVED . . . . . .
FUND: . . . . . .
SCALE: H. V. INSPECTOR'S BOOK. . . . . .

MAGNOLIA BRIDGE REPLACEMENT TYPE, SIZE, AND LOCATION STEEL BOX ALTERNATE

JOB NO.		
	PC	xxxxx
	R/W	xxxxx
	CO	xxxxx

VAULT PLAN NO. ???-???

SHEET XX OF ?

REGION NO.	STATE	FEDERAL AID PROJECT NO.	SHEET NO.
10	WA		

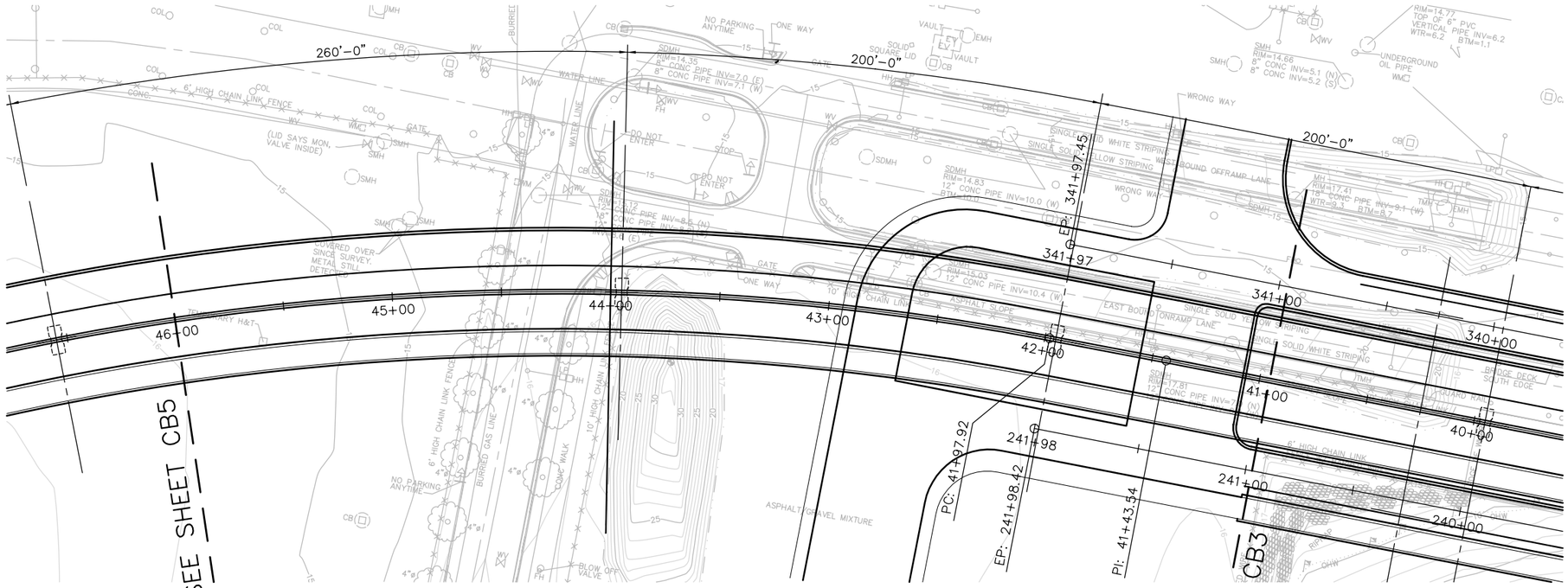

PLAN – MAINLINE
SCALE: 1" = 30'

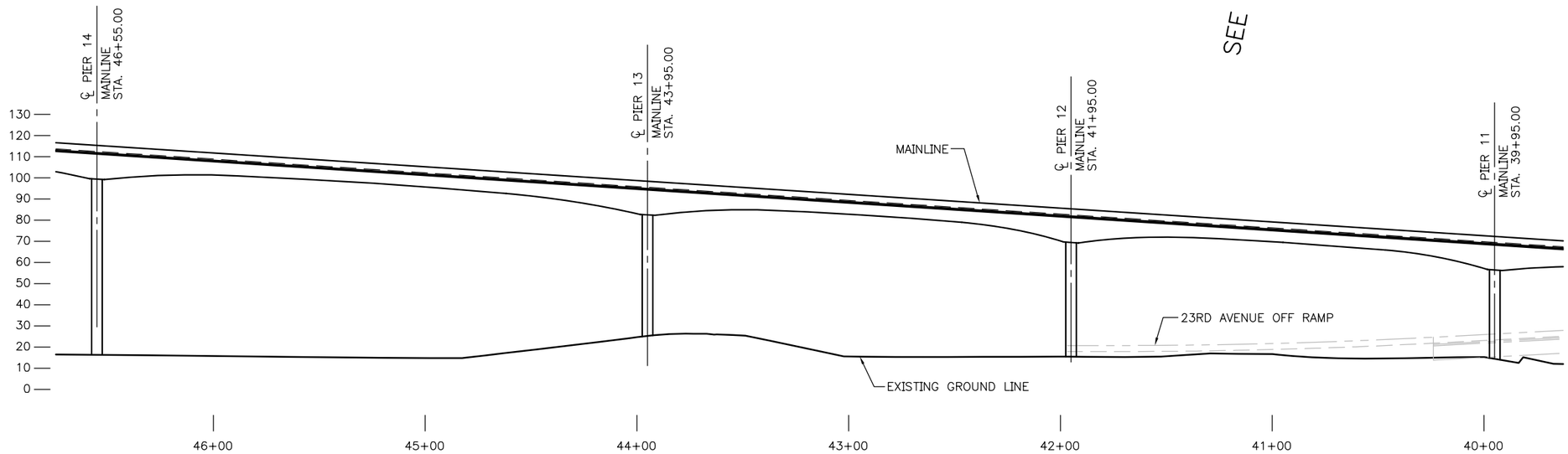

ELEVATION – MAINLINE
SCALE: 1" = 30'

CB4
PLAN AND ELEVATION

N:\36339\Drawings\Sheets\STEEL_BOX_SB_PLEL4.dwg
Nov/16/2006 10:29am

VAULT SERIAL NO. ????	REVISIONS			
	MARK	DATE	CHK'D	REV'D DESCRIPTION

HNTB

HNTB Corporation
600 108th Avenue NE, Suite 900
Bellevue, WA 98004

Tel (425) 455-3555
Fax (425) 453-9179
www.hntb.com

APPROVED FOR ADVERTISING
KENNETH J. NAKATSU
DEPARTMENT OF EXECUTIVE ADMINISTRATION

SEATTLE, WASHINGTON . . . . . 20 . . .

BY: . . . . . .
DIRECTOR, CONTRACTING SERVICES

NAME OR INITIALS AND DATE	INITIALS AND DATE
DESIGNED	REVIEWED:
CHECKED	DES. SPU CONST.
	SDOT PROJ. MGR.
DRAWN	RECEIVED
CHECKED	REVISED AS BUILT

ALL WORK DONE IN ACCORDANCE WITH THE CITY OF SEATTLE STANDARD PLANS AND SPECIFICATIONS AND OTHER DOCUMENTS CALLED FOR IN SECTION 0-02.3 OF THE PROJECT MANUAL.

City of Seattle
SEATTLE DEPARTMENT
OF TRANSPORTATION

ORDINANCE NO. . . . . APPROVED . . . . . .
FUND: . . . . . .
SCALE: H. V. INSPECTOR'S BOOK. . . . . .

MAGNOLIA BRIDGE REPLACEMENT
TYPE, SIZE, AND LOCATION
STEEL BOX ALTERNATE

JOB NO.		
	PC	XXXXX
	R/W	XXXXX
	CO	XXXXX

VAULT PLAN NO. ???–???

SHEET XX OF ?

REGION NO.	STATE	FEDERAL AID PROJECT NO.	SHEET NO.
10	WA		

PLAN – MAINLINE

SCALE: 1" = 30'

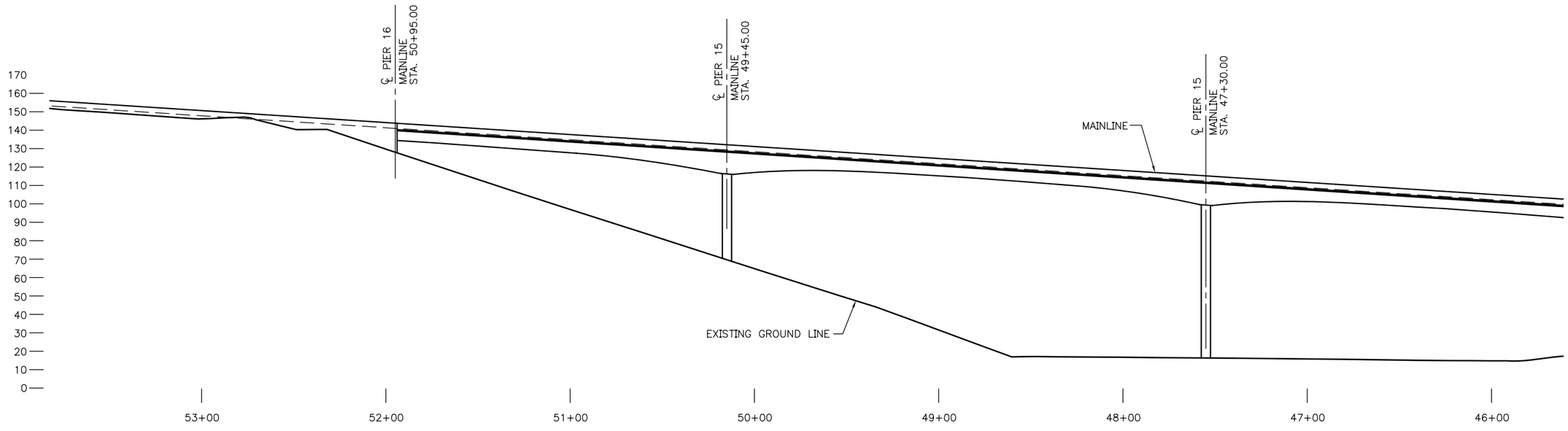

ELEVATION – MAINLINE

SCALE: 1" = 30'

SB5

PLAN AND ELEVATION

N:\36339\Drawings\Sheets\STEEL_BOX\SB_PLEL5.dwg
Nov/16/2006 10:30am

VAULT SEQN NO. ????	REVISIONS			
	MARK	DATE	CHK'D	REV'D
			MADE	DESCRIPTION

HNTB

HNTB Corporation
600 108th Avenue NE, Suite 900
Bellevue, WA 98004

Tel (425) 455-3555
Fax (425) 453-9179
www.hntb.com

APPROVED FOR ADVERTISING
KENNETH J. NAKATSU
DEPARTMENT OF EXECUTIVE ADMINISTRATION

SEATTLE, WASHINGTON . . . . . 20. . . .

BY: . . . . . .

DIRECTOR, CONTRACTING SERVICES

NAME OR INITIALS AND DATE	INITIALS AND DATE
DESIGNED	REVIEWED:
CHECKED	DES. SPU CONST.
	SDOT PROJ. MGR.
DRAWN	RECEIVED
CHECKED	REVISED AS BUILT

ALL WORK DONE IN ACCORDANCE WITH THE CITY OF SEATTLE STANDARD PLANS AND SPECIFICATIONS AND OTHER DOCUMENTS CALLED FOR IN SECTION 0-02.3 OF THE PROJECT MANUAL.

City of Seattle
SEATTLE DEPARTMENT
OF TRANSPORTATION

ORDINANCE NO. . . . . APPROVED . . . . . .

FUND: . . . . . .

SCALE: H. V. INSPECTOR'S BOOK. . . . . .

MAGNOLIA BRIDGE REPLACEMENT
TYPE, SIZE, AND LOCATION
STEEL BOX ALTERNATE

JOB NO.		
	PC	XXXXX
	R/W	XXXXX
	CO	XXXXX

VAULT PLAN NO. ???-???

SHEET XX OF ?

REGION NO.	STATE	FEDERAL AID PROJECT NO.	SHEET NO.
10	WA		

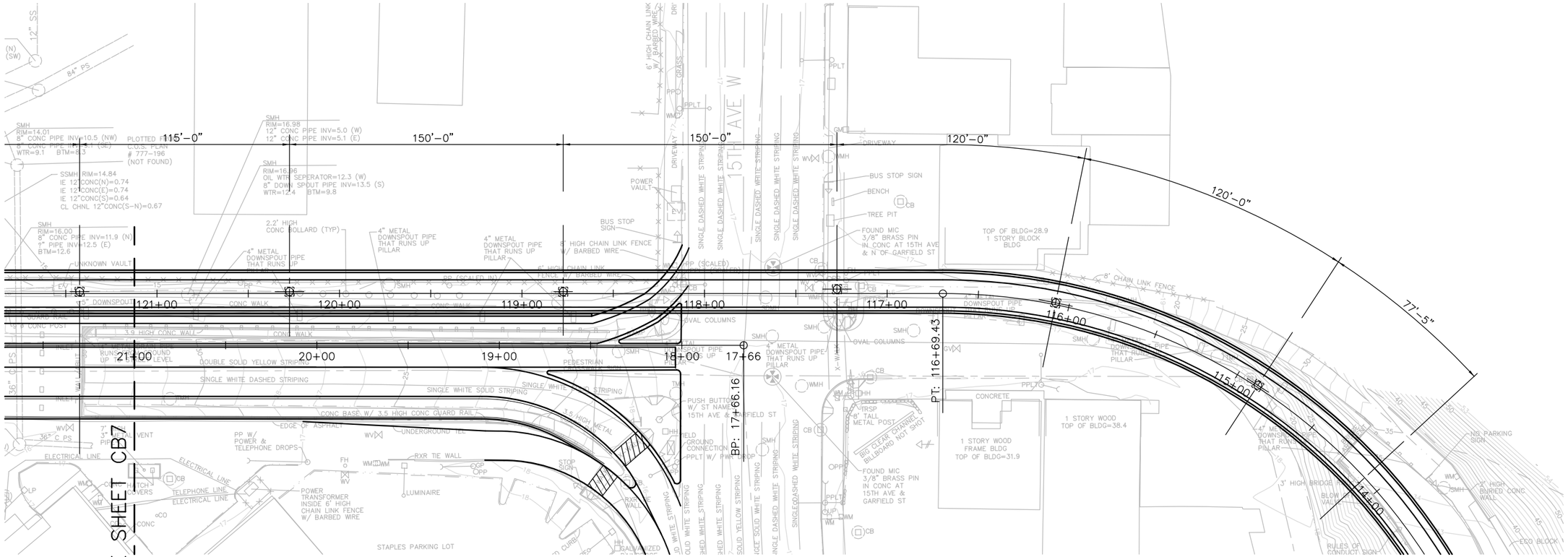

PLAN – 15TH AVENUE OVERPASS

SCALE: 1" = 30'

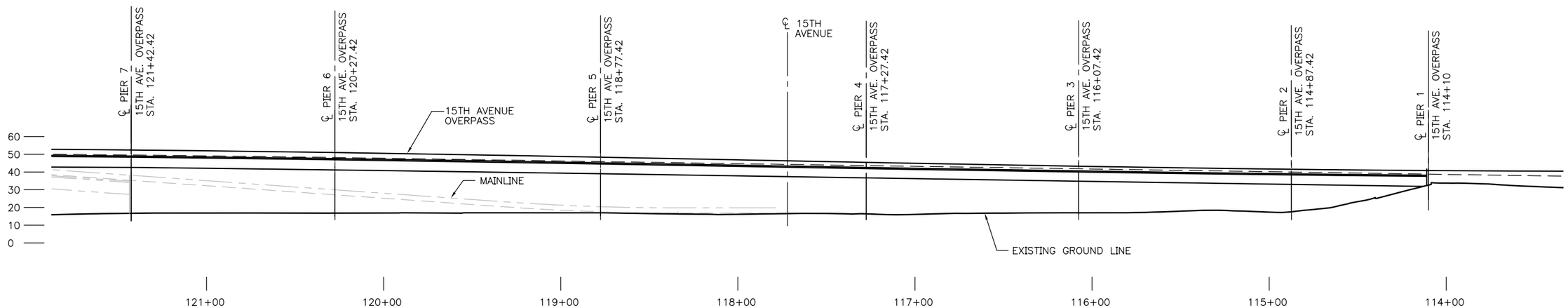

ELEVATION – 15TH AVENUE OVERPASS

SCALE: 1" = 30'

N:\36339\Drawings\Sheets\STEEL_BOX\SB_PLEL6.dwg
Nov/16/2006 10:31am

SB6
PLAN AND ELEVATION

VAULT SERIAL NO. ????	REVISIONS			
	MARK	DATE	MADE / CHKD	REV'D DESCRIPTION

HNTB

HNTB Corporation
600 108th Avenue NE, Suite 900
Bellevue, WA 98004

Tel (425) 455-3555
Fax (425) 453-9179
www.hntb.com

APPROVED FOR ADVERTISING
KENNETH J. NAKATSU
DEPARTMENT OF EXECUTIVE ADMINISTRATION

SEATTLE, WASHINGTON . . . . . 20 . . .

BY: . . . . . .
DIRECTOR, CONTRACTING SERVICES

NAME OR INITIALS AND DATE	INITIALS AND DATE
DESIGNED	REVIEWED:
CHECKED	DES. SPU CONST.
	SDOT PROJ. MGR.
DRAWN	RECEIVED
CHECKED	REVISED AS BUILT

ALL WORK DONE IN ACCORDANCE WITH THE CITY OF SEATTLE STANDARD PLANS AND SPECIFICATIONS AND OTHER DOCUMENTS CALLED FOR IN SECTION 0-02.3 OF THE PROJECT MANUAL.

City of Seattle
SEATTLE DEPARTMENT OF TRANSPORTATION

ORDINANCE NO. . . . . APPROVED . . . . . .
FUND: . . . . . .
SCALE: H. V. INSPECTOR'S BOOK. . . . . .

MAGNOLIA BRIDGE REPLACEMENT
TYPE, SIZE, AND LOCATION
STEEL BOX ALTERNATE

JOB NO.		
	PC	XXXXX
	R/W	XXXXX
	CO	XXXXX
VAULT PLAN NO.		???–???
SHEET XX OF ?		

REGION NO.	STATE	FEDERAL AID PROJECT NO.	SHEET NO.
10	WA		

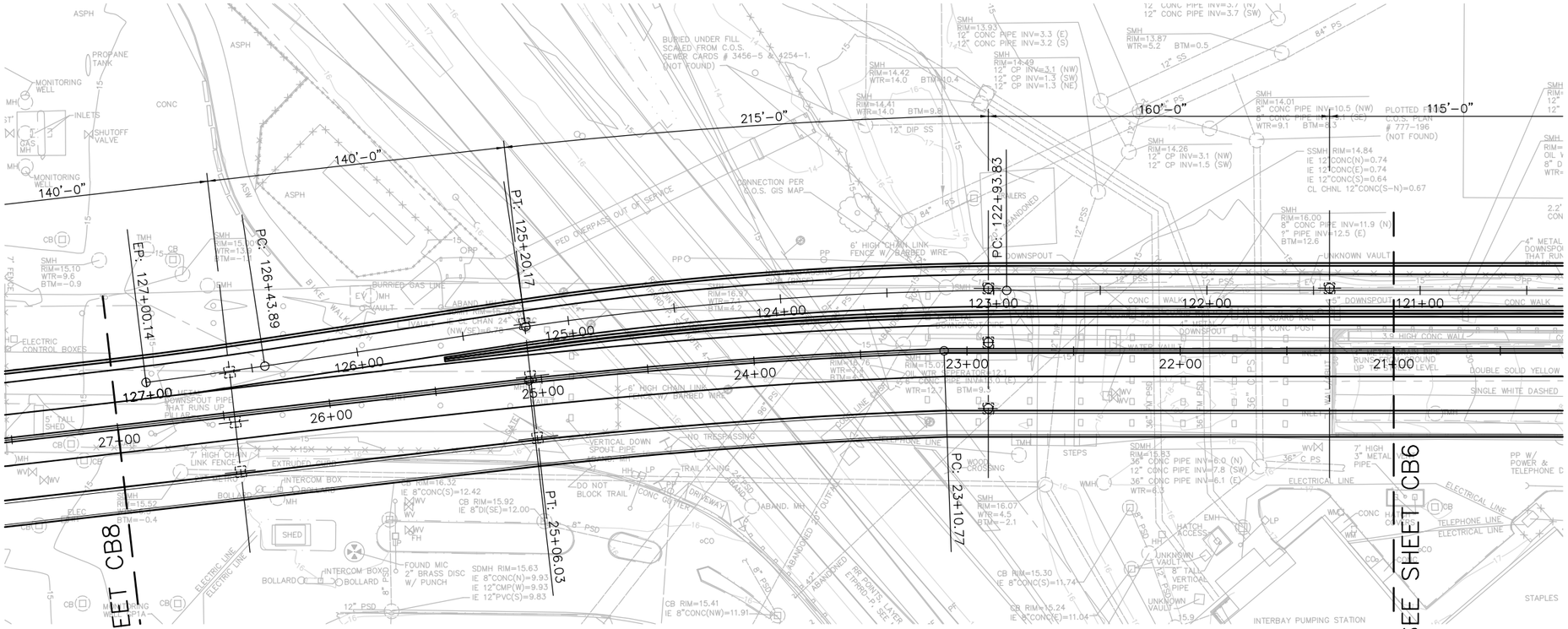

PLAN – 15TH AVENUE OVERPASS

SCALE: 1" = 30'

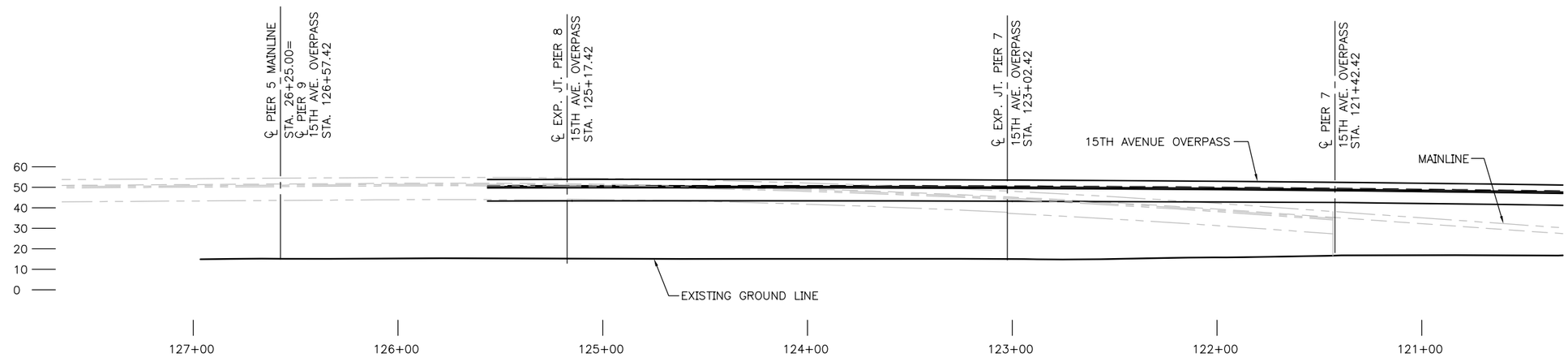

ELEVATION – 15TH AVENUE OVERPASS

SCALE: 1" = 30'

SB7
PLAN AND ELEVATION

N:\36339\Drawings\Sheets\STEEL_BOX\SB_PLEL7.dwg
Nov/16/2006 10:34am

VAULT SERIAL NO. ????	REVISIONS			
	MARK	DATE	CHK'D	REV'D DESCRIPTION

HNTB

HNTB Corporation
600 108th Avenue NE, Suite 900
Bellevue, WA 98004

Tel (425) 455-3555
Fax (425) 453-9179
www.hntb.com

APPROVED FOR ADVERTISING
KENNETH J. NAKATSU
DEPARTMENT OF EXECUTIVE ADMINISTRATION

SEATTLE, WASHINGTON . . . . . 20. . . .

BY: . . . . . .
DIRECTOR, CONTRACTING SERVICES

NAME OR INITIALS AND DATE	INITIALS AND DATE
DESIGNED	REVIEWED:
CHECKED	DES. . . . . SPU CONST. . . .
	SDOT. . . . . PROJ. MGR. . . .
DRAWN	RECEIVED . . . . .
CHECKED	REVISED AS BUILT . . . . .

ALL WORK DONE IN ACCORDANCE WITH THE CITY OF SEATTLE STANDARD PLANS AND SPECIFICATIONS AND OTHER DOCUMENTS CALLED FOR IN SECTION 0-02.3 OF THE PROJECT MANUAL.

City of Seattle
SEATTLE DEPARTMENT
OF TRANSPORTATION

ORDINANCE NO. . . . . APPROVED . . . . . .
FUND: . . . . . .
SCALE: H. V. INSPECTOR'S BOOK. . . . . .

MAGNOLIA BRIDGE REPLACEMENT
TYPE, SIZE, AND LOCATION
STEEL BOX ALTERNATE

JOB NO.		
	PC	xxxxx
	R/W	xxxxx
	CO	xxxxx
VAULT PLAN NO.	???–???	
SHEET XX OF ?		

REGION NO.	STATE	FEDERAL AID PROJECT NO.	SHEET NO.
10	WA		

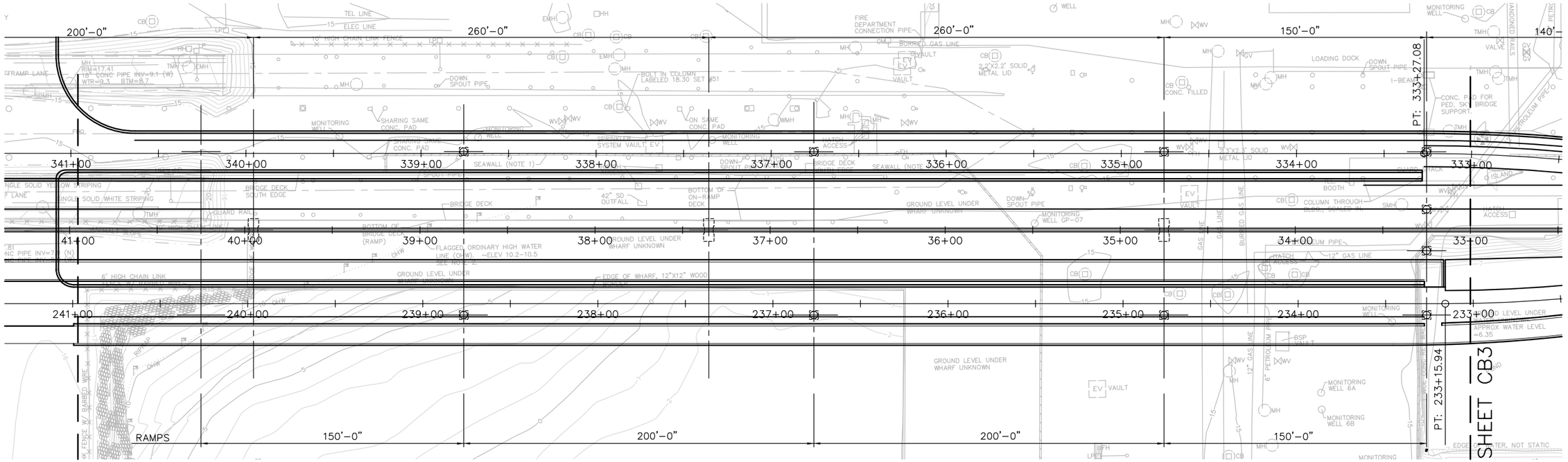

PLAN – 23RD OFF RAMP

SCALE: 1" = 30'

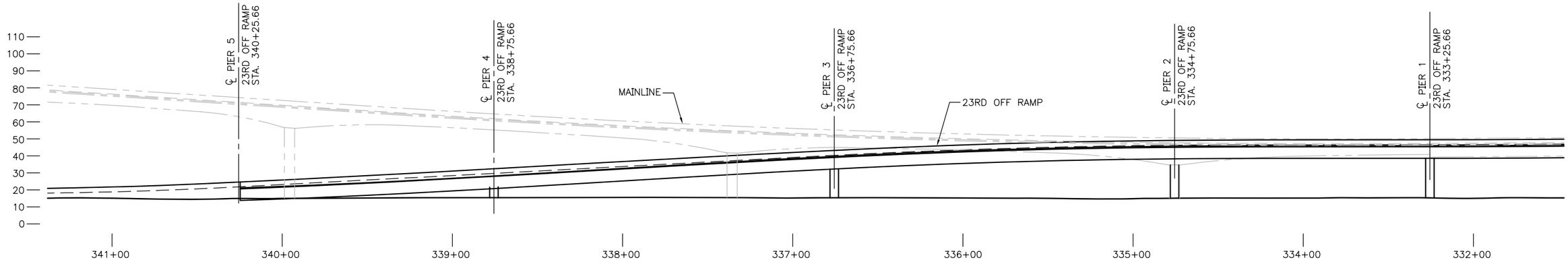

ELEVATION – 23RD OFF RAMP

SCALE: 1" = 30'

SB8

PLAN AND ELEVATION

N:\36339\Drawings\Sheets\STEEL_BOX\SB_PLEL8.dwg
Nov/16/2006 10:35am

VAULT SERIAL NO. ????? | REVISIONS | MARK | DATE | MADE | CHK'D | REV'D | DESCRIPTION

HNTB

HNTB Corporation
600 108th Avenue NE, Suite 900
Bellevue, WA 98004

Tel (425) 455-3555
Fax (425) 453-9179
www.hntb.com

APPROVED FOR ADVERTISING
KENNETH J. NAKATSU
DEPARTMENT OF EXECUTIVE ADMINISTRATION

SEATTLE, WASHINGTON . . . . . 20 . . .

BY: . . . . . .
DIRECTOR, CONTRACTING SERVICES

NAME OR INITIALS AND DATE
DESIGNED . . . . . .
CHECKED . . . . . .
DRAWN . . . . . .
CHECKED . . . . . .

INITIALS AND DATE
REVIEWED:
DES. . . . . SPU CONST. . . . .
SDOT . . . . . PROJ. MGR. . . . .
RECEIVED . . . . . .
REVISED AS BUILT . . . . . .

ALL WORK DONE IN ACCORDANCE WITH THE CITY OF SEATTLE STANDARD PLANS AND SPECIFICATIONS AND OTHER DOCUMENTS CALLED FOR IN SECTION 0-02.3 OF THE PROJECT MANUAL.

City of Seattle
SEATTLE DEPARTMENT
OF TRANSPORTATION

ORDINANCE NO. . . . . APPROVED . . . . . .
FUND: . . . . . .
SCALE: H. V. INSPECTOR'S BOOK . . . . . .

MAGNOLIA BRIDGE REPLACEMENT TYPE, SIZE, AND LOCATION STEEL BOX ALTERNATE

JOB NO.
PC XXXXX
R/W XXXXX
CO XXXXX

VAULT PLAN NO. ???-???

SHEET XX OF ?

REGION NO.	STATE	FEDERAL AID PROJECT NO.	SHEET NO.
10	WA		

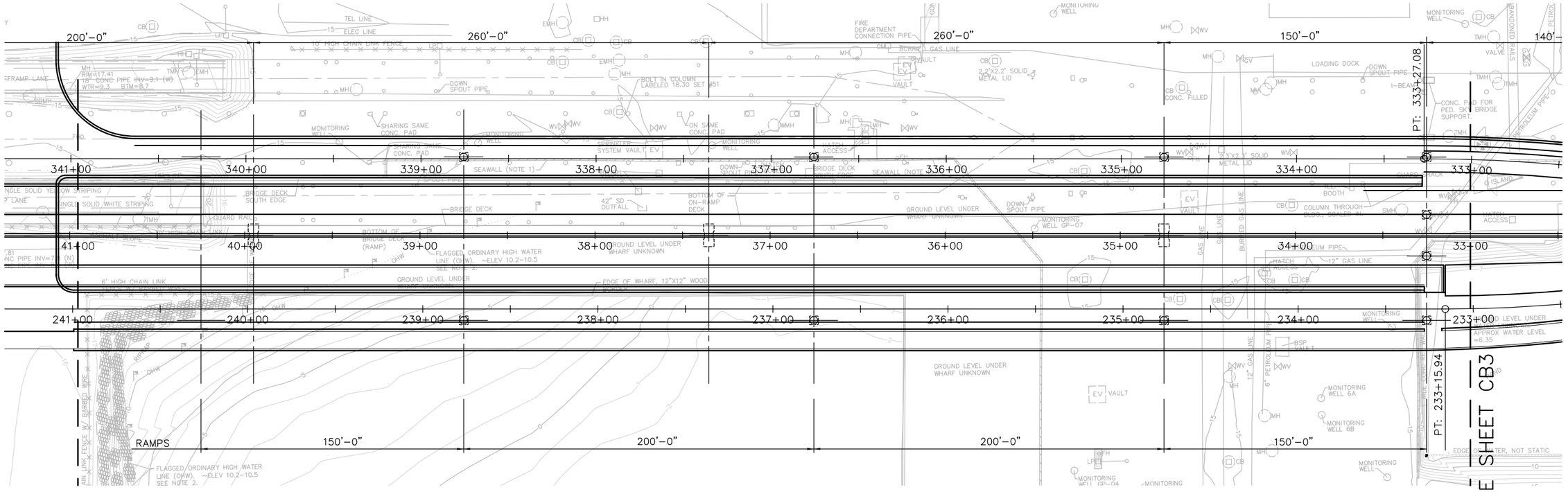

PLAN – 23RD ON RAMP

SCALE: 1" = 30'

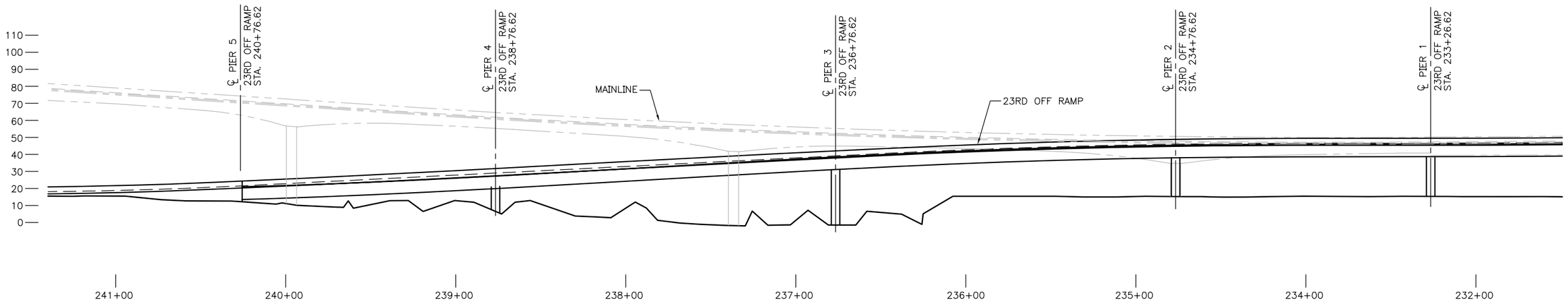

ELEVATION – 23RD ON RAMP

SCALE: 1" = 30'

SB9
PLAN AND ELEVATION

N:\36339\Drawings\Sheets\STEEL_BOX\SB_PLE19.dwg
Nov/16/2006 10:36am

VAULT SERIAL NO. ????

REVISIONS			
MARK	DATE	CHK'D	REV'D
MADE			
DESCRIPTION			

HNTB

HNTB Corporation
600 108th Avenue NE, Suite 900
Bellevue, WA 98004

Tel (425) 455-3555
Fax (425) 453-9179
www.hntb.com

APPROVED FOR ADVERTISING
KENNETH J. NAKATSU
DEPARTMENT OF EXECUTIVE ADMINISTRATION

SEATTLE, WASHINGTON . . . . . 20. . . .

BY: . . . . . .
DIRECTOR, CONTRACTING SERVICES

NAME OR INITIALS AND DATE	INITIALS AND DATE
DESIGNED	REVIEWED:
CHECKED	DES. . . . . SPU CONST. . . . .
	SDOT. . . . . PROJ. MGR. . . . .
DRAWN	RECEIVED . . . . .
CHECKED	REVISED AS BUILT . . . . .

ALL WORK DONE IN ACCORDANCE WITH THE CITY OF SEATTLE STANDARD PLANS AND SPECIFICATIONS AND OTHER DOCUMENTS CALLED FOR IN SECTION 0-02.3 OF THE PROJECT MANUAL.

City of Seattle
SEATTLE DEPARTMENT
OF TRANSPORTATION

ORDINANCE NO. . . . . APPROVED . . . . . .
FUND: . . . . . .
SCALE: H. V. INSPECTOR'S BOOK. . . . . .

MAGNOLIA BRIDGE REPLACEMENT
TYPE, SIZE, AND LOCATION
STEEL BOX ALTERNATE

JOB NO.		
	PC	XXXXX
	R/W	XXXXX
	CO	XXXXX

VAULT PLAN NO. ???-???

SHEET XX OF ?

REGION NO.	STATE	FEDERAL AID PROJECT NO.	SHEET NO.
10	WA		

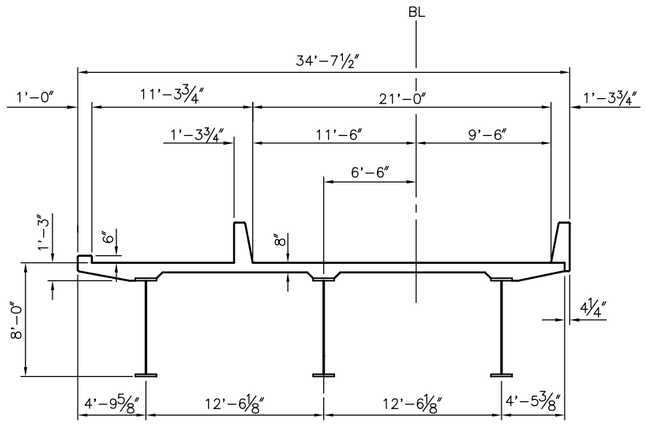

TYPICAL SECTION
23RD ON RAMP

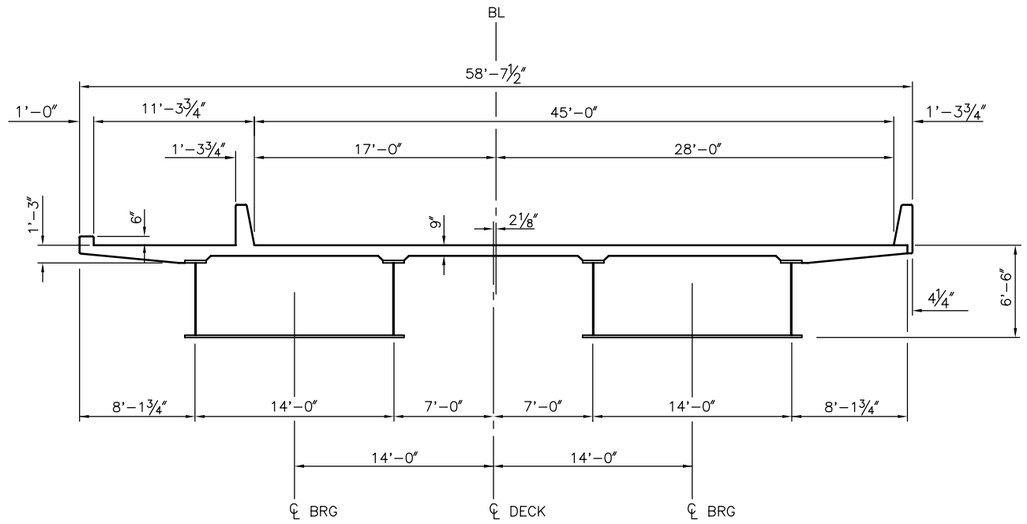

TYPICAL SECTION
MAINLINE AT PIER

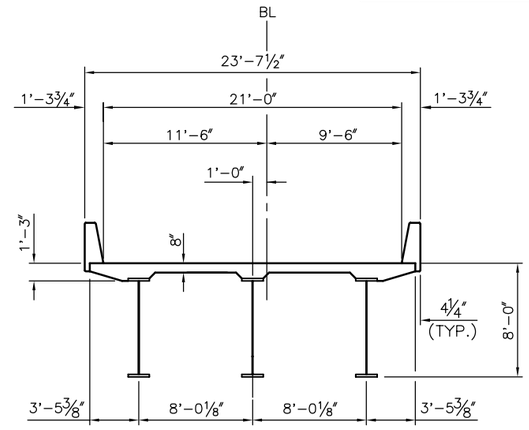

TYPICAL SECTION
23RD OFF RAMP

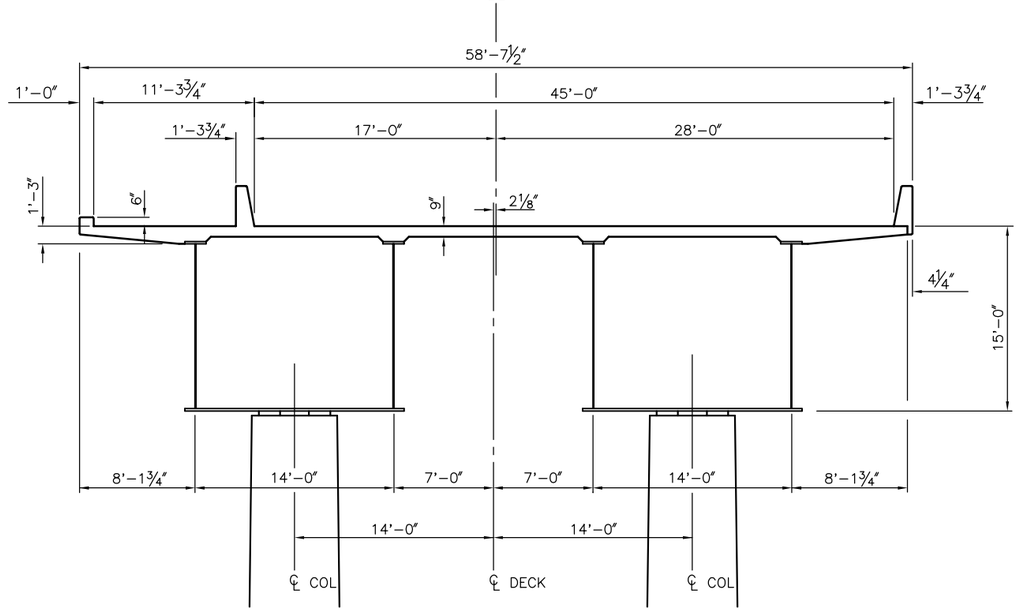

TYPICAL SECTION
MAINLINE AT PIER

SB10
TYPICAL SECTIONS

N:\36339\Drawings\Sheets\STEEL_BOX\SB_TSEC1.dwg
Nov/16/2006 10:37am

VAULT SERIAL NO. ?????	MARK	REVISIONS	DATE	MADE / CHKD	REV'D
		DESCRIPTION			

HNTB

HNTB Corporation
600 108th Avenue NE, Suite 900
Bellevue, WA 98004

Tel (425) 455-3555
Fax (425) 453-9179
www.hntb.com

APPROVED FOR ADVERTISING
KENNETH J. NAKATSU
DEPARTMENT OF EXECUTIVE ADMINISTRATION

SEATTLE, WASHINGTON . 20 .

BY: .
DIRECTOR, CONTRACTING SERVICES

NAME OR INITIALS AND DATE	INITIALS AND DATE
DESIGNED .	REVIEWED:
CHECKED .	DES. . SPU CONST. .
	SDOT. . PROJ. MGR. .
DRAWN .	RECEIVED .
CHECKED .	REVISED AS BUILT .

ALL WORK DONE IN ACCORDANCE WITH THE CITY OF SEATTLE STANDARD PLANS AND SPECIFICATIONS AND OTHER DOCUMENTS CALLED FOR IN SECTION 0-02.3 OF THE PROJECT MANUAL.

City of Seattle
SEATTLE DEPARTMENT
OF TRANSPORTATION

ORDINANCE NO. . APPROVED .
FUND: .
SCALE: H. V. INSPECTOR'S BOOK.

MAGNOLIA BRIDGE REPLACEMENT
TYPE, SIZE, AND LOCATION
STEEL BOX ALTERNATE

JOB NO.		
	PC	XXXXX
	R/W	XXXXX
	CO	XXXXX

VAULT PLAN NO. ???-???

SHEET XX OF ?

REGION NO.	STATE	FEDERAL AID PROJECT NO.	SHEET NO.
10	WA		

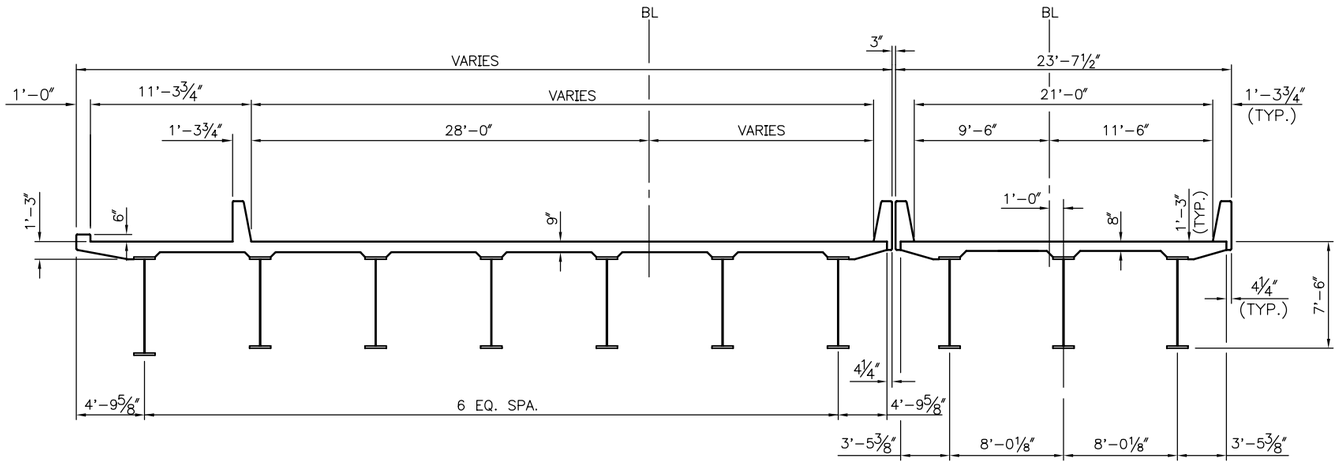

TYPICAL SECTION
OVER RAILROAD

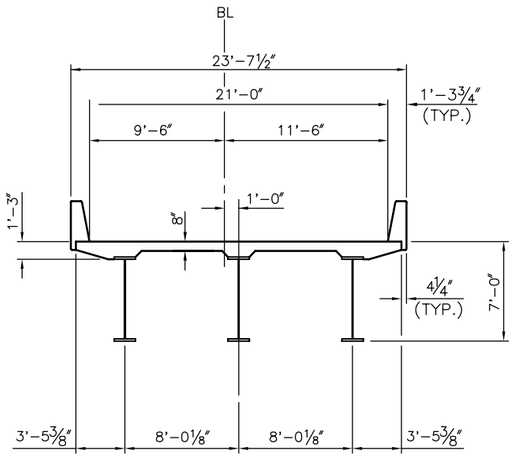

TYPICAL SECTION
15TH AVE. OVERPASS

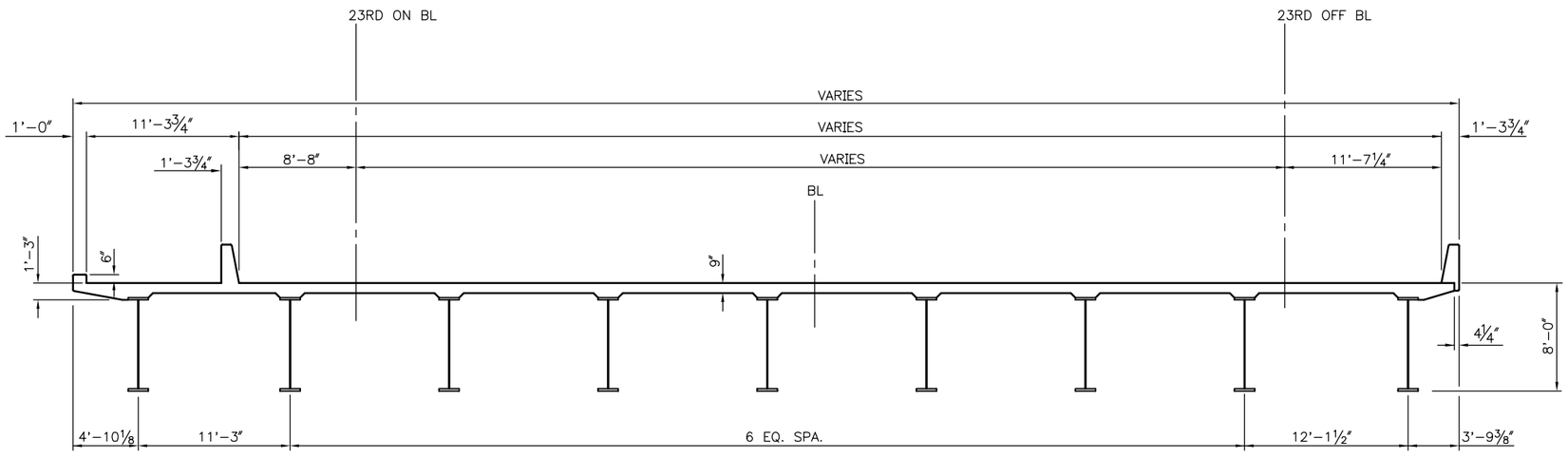

TYPICAL SECTION
MAINLINE AT LOW LEVEL

SB11
TYPICAL SECTIONS

N:\36339\Drawings\Sheets\STEEL_BOX\SB_TSEC2.dwg
Nov/16/2006 10:37am

VAULT SERIAL NO. ????	MARK	DATE	CHKD	REV'D	DESCRIPTION

HNTB

HNTB Corporation
600 108th Avenue NE, Suite 900
Bellevue, WA 98004

Tel (425) 455-3555
Fax (425) 453-9179
www.hntb.com

APPROVED FOR ADVERTISING
KENNETH J. NAKATSU
DEPARTMENT OF EXECUTIVE ADMINISTRATION

SEATTLE, WASHINGTON . . 20. .

BY: .
DIRECTOR, CONTRACTING SERVICES

NAME OR INITIALS AND DATE	INITIALS AND DATE
DESIGNED .	REVIEWED:
CHECKED .	DES. . SPU CONST. .
	SDOT. . PROJ. MGR. .
DRAWN .	RECEIVED .
CHECKED .	REVISED AS BUILT .

ALL WORK DONE IN ACCORDANCE WITH THE CITY OF SEATTLE STANDARD PLANS AND SPECIFICATIONS AND OTHER DOCUMENTS CALLED FOR IN SECTION 0-02.3 OF THE PROJECT MANUAL.

City of Seattle
SEATTLE DEPARTMENT OF TRANSPORTATION

ORDINANCE NO. . . APPROVED . .
FUND: .
SCALE: H. V. INSPECTOR'S BOOK. .

MAGNOLIA BRIDGE REPLACEMENT
TYPE, SIZE, AND LOCATION
STEEL BOX ALTERNATE

JOB NO.		
	PC	XXXXX
	R/W	XXXXX
	CO	XXXXX

VAULT PLAN NO. ???-???

SHEET XX OF ?

REGION NO.	STATE	FEDERAL AID PROJECT NO.	SHEET NO.
10	WA		

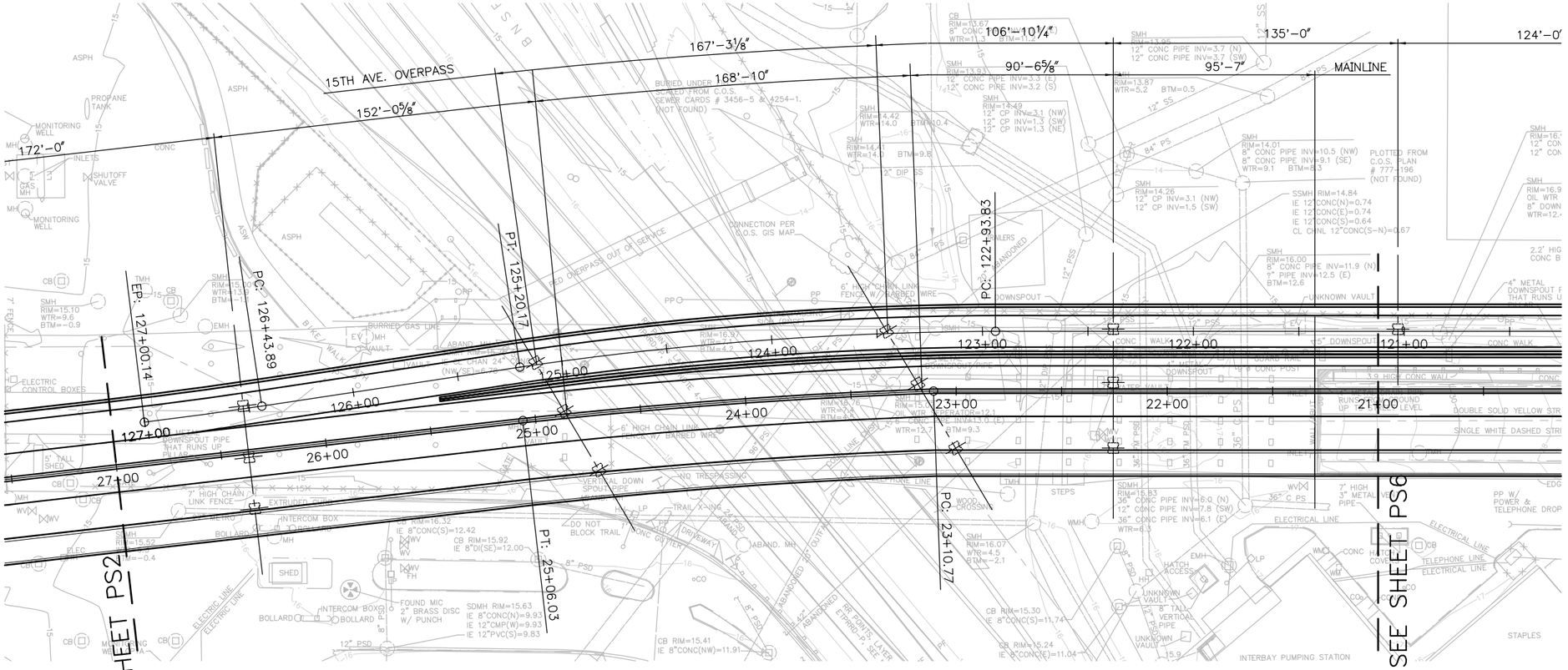

PLAN – MAINLINE

SCALE: 1" = 30'

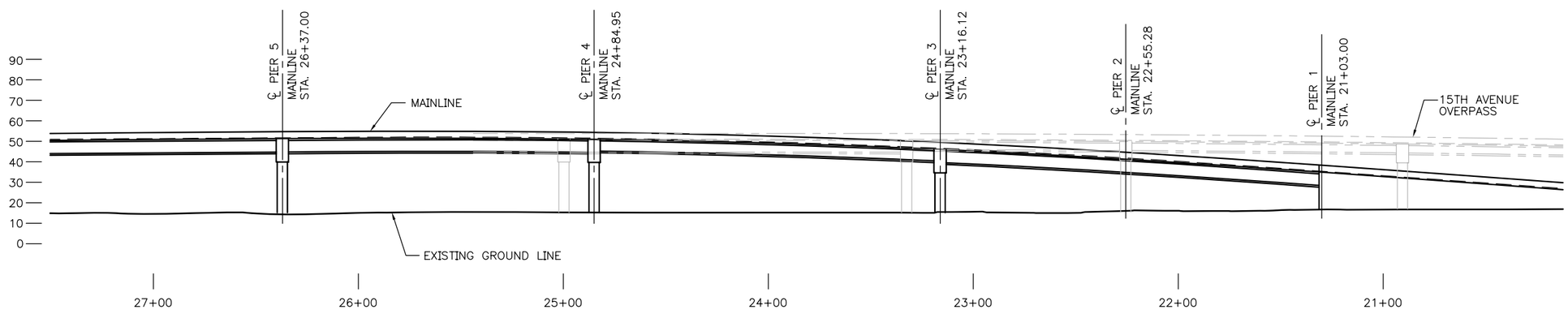

ELEVATION – MAINLINE

SCALE: 1" = 30'

PS1
PLAN AND ELEVATION

N:\363391\Drawings\Sheets\PS_GIRDER\PS_PLE1.dwg
Nov/16/2006 10:14am

VAULT SERIAL NO. ????	REVISIONS			
	MARK	DATE	CHK'D	REV'D DESCRIPTION

HNTB

HNTB Corporation
600 108th Avenue NE, Suite 900
Bellevue, WA 98004

Tel (425) 455-3555
Fax (425) 453-9179
www.hntb.com

APPROVED FOR ADVERTISING
KENNETH J. NAKATSU
DEPARTMENT OF EXECUTIVE ADMINISTRATION

SEATTLE, WASHINGTON . . . . . 20. . . .

BY: . . . . . .
DIRECTOR, CONTRACTING SERVICES

NAME OR INITIALS AND DATE	INITIALS AND DATE
DESIGNED	REVIEWED:
CHECKED	DES. SPU CONST.
	SDOT PROJ. MGR.
DRAWN	RECEIVED
CHECKED	REVISED AS BUILT

ALL WORK DONE IN ACCORDANCE WITH THE CITY OF SEATTLE STANDARD PLANS AND SPECIFICATIONS AND OTHER DOCUMENTS CALLED FOR IN SECTION 0-02.3 OF THE PROJECT MANUAL.

City of Seattle
SEATTLE DEPARTMENT OF TRANSPORTATION

ORDINANCE NO. . . . . APPROVED . . . . . .
FUND: . . . . . .
SCALE: H. V. INSPECTOR'S BOOK. . . . . .

MAGNOLIA BRIDGE REPLACEMENT
TYPE, SIZE, AND LOCATION
PRESTRESSED GIRDER ALTERNATE

JOB NO.		
	PC	xxxxx
	R/W	xxxxx
	CO	xxxxx
VAULT PLAN NO.		???–???
SHEET XX OF ?		

REGION NO.	STATE	FEDERAL AID PROJECT NO.	SHEET NO.
10	WA		

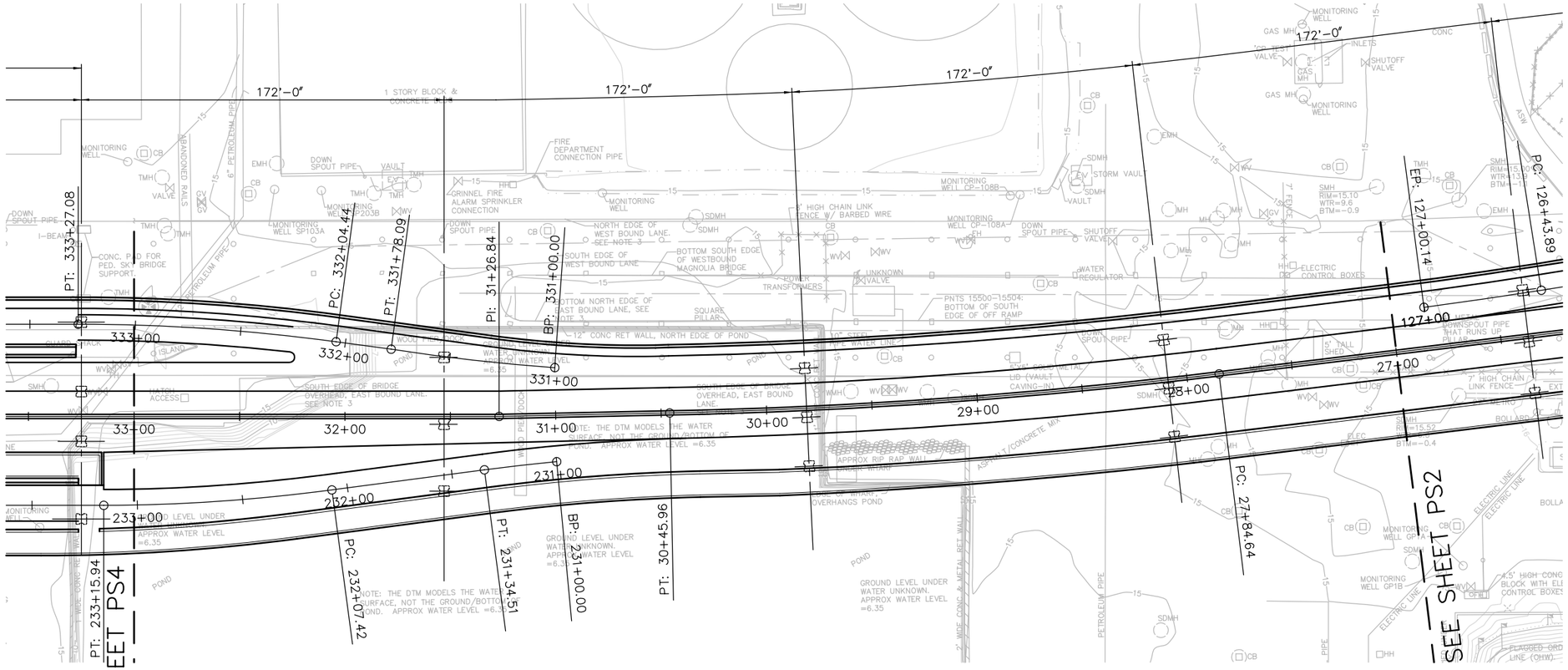

PLAN – MAINLINE

SCALE: 1" = 30'

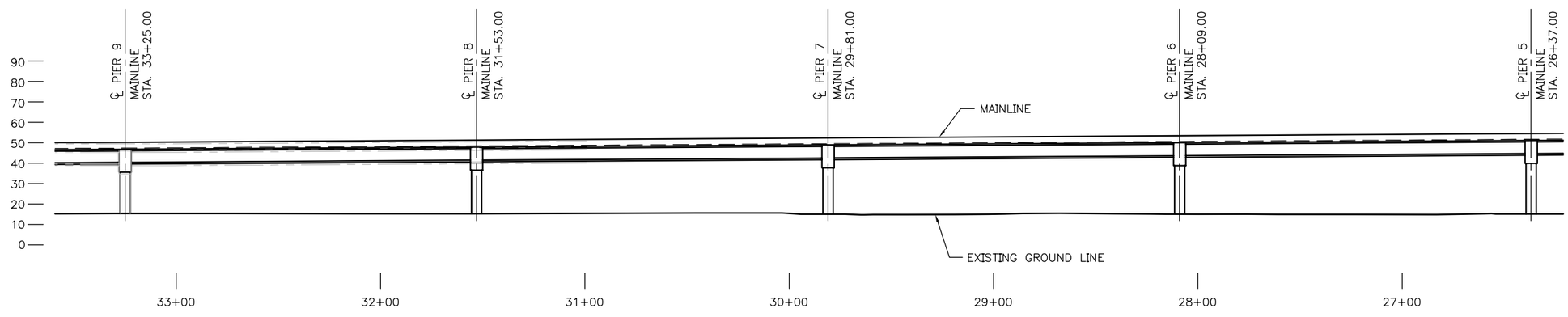

ELEVATION – MAINLINE

SCALE: 1" = 30'

PS2
PLAN AND ELEVATION

N:\36339\Drawings\Sheets\PS_GIRDER\PS_PLEL2.dwg
Nov/16/2006 10:16am

VAULT SERIAL NO. ????

MARK	DATE	CHK'D	REV'D	DESCRIPTION

REVISIONS

HNTB

HNTB Corporation
600 108th Avenue NE, Suite 900
Bellevue, WA 98004

Tel (425) 455-3555
Fax (425) 453-9179
www.hntb.com

APPROVED FOR ADVERTISING
KENNETH J. NAKATSU
DEPARTMENT OF EXECUTIVE ADMINISTRATION

SEATTLE, WASHINGTON . . . . . 20 . . .

BY: . . . . . .
DIRECTOR, CONTRACTING SERVICES

NAME OR INITIALS AND DATE	INITIALS AND DATE
DESIGNED	REVIEWED:
CHECKED	DES. SPU CONST.
	SDOT PROJ. MGR.
DRAWN	RECEIVED
CHECKED	REVISED AS BUILT

ALL WORK DONE IN ACCORDANCE WITH THE CITY OF SEATTLE STANDARD PLANS AND SPECIFICATIONS AND OTHER DOCUMENTS CALLED FOR IN SECTION 0-02.3 OF THE PROJECT MANUAL.

City of Seattle
SEATTLE DEPARTMENT OF TRANSPORTATION

ORDINANCE NO. . . . . APPROVED . . . . . .
FUND: . . . . . .
SCALE: H. V. INSPECTOR'S BOOK. . . . . .

MAGNOLIA BRIDGE REPLACEMENT
TYPE, SIZE, AND LOCATION
PRESTRESSED GIRDER ALTERNATE

JOB NO.		
	PC	XXXXX
	R/W	XXXXX
	CO	XXXXX

VAULT PLAN NO. ???–???

SHEET XX OF ?

REGION NO.	STATE	FEDERAL AID PROJECT NO.	SHEET NO.
10	WA		

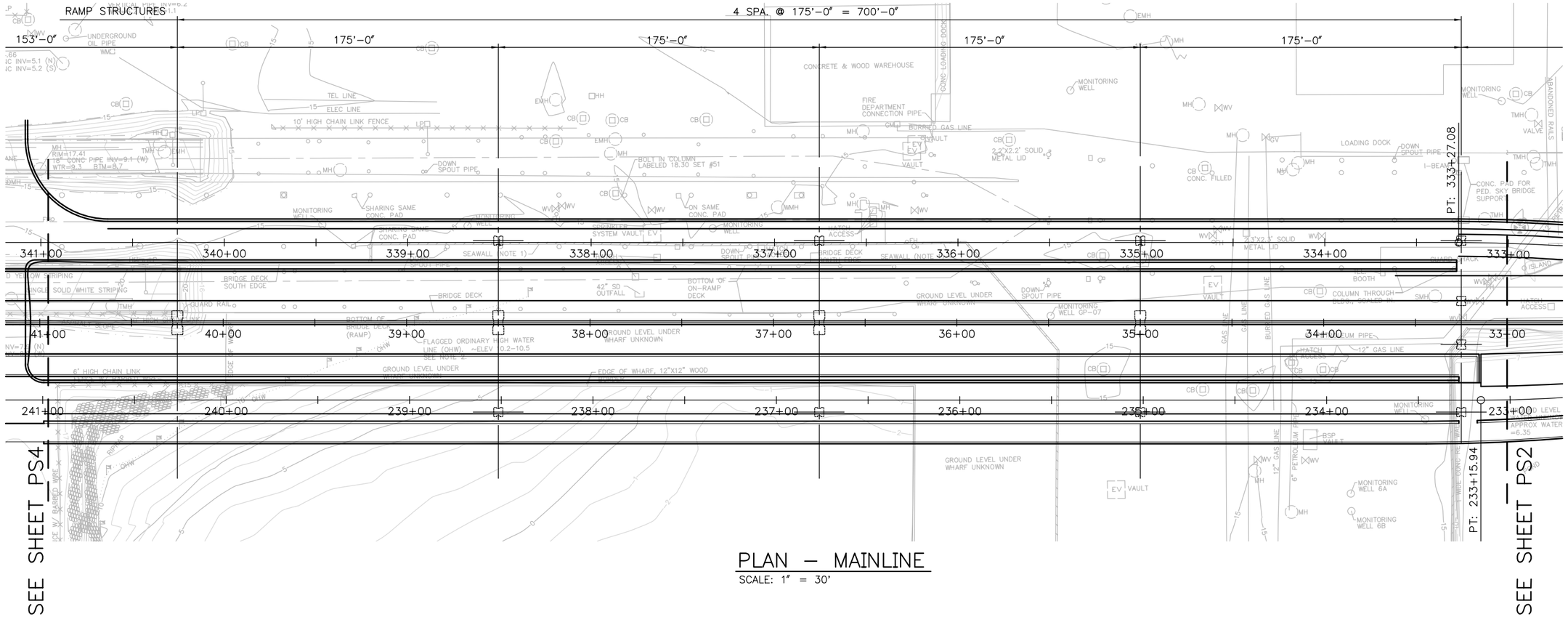

PLAN — MAINLINE

SCALE: 1" = 30'

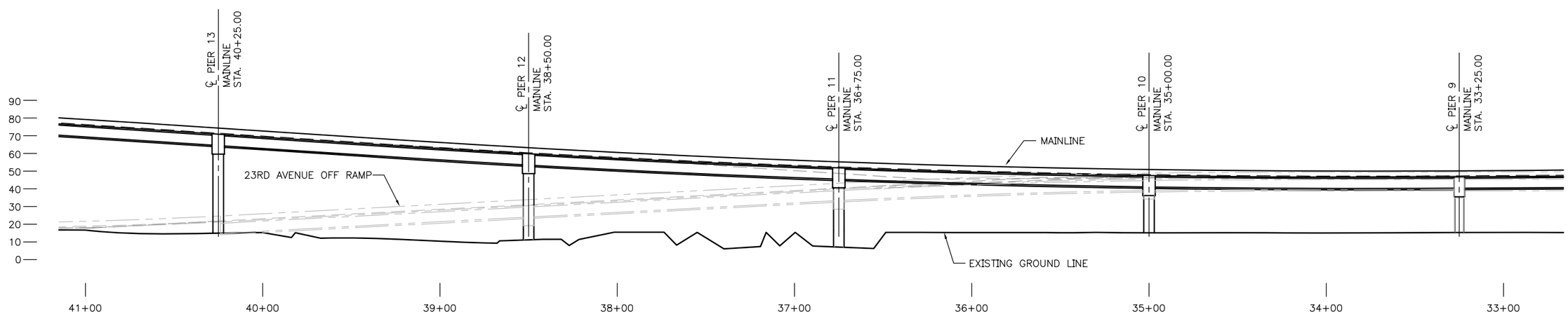

ELEVATION — MAINLINE

SCALE: 1" = 30'

PS3
PLAN AND ELEVATION

N:\36339\Drawings\Sheets\PS_GIRDER\PS_PLEL3.dwg
Nov/16/2006 10:17am

VAULT SERIAL NO. ?????	MARK	DATE	MADE / CHK'D	REV'D	DESCRIPTION
REVISIONS					

HNTB
HNTB Corporation
600 108th Avenue NE, Suite 900
Bellevue, WA 98004
Tel (425) 455-3555
Fax (425) 453-9179
www.hntb.com

APPROVED FOR ADVERTISING
KENNETH J. NAKATSU
DEPARTMENT OF EXECUTIVE ADMINISTRATION
SEATTLE, WASHINGTON . . . . . 20 . . . .
BY: . . . . . .
DIRECTOR, CONTRACTING SERVICES

NAME OR INITIALS AND DATE	INITIALS AND DATE
DESIGNED	REVIEWED:
CHECKED	DES. SPU CONST.
	SDOT PROJ. MGR.
DRAWN	RECEIVED
CHECKED	REVISED AS BUILT

ALL WORK DONE IN ACCORDANCE WITH THE CITY OF SEATTLE STANDARD PLANS AND SPECIFICATIONS AND OTHER DOCUMENTS CALLED FOR IN SECTION 0-02.3 OF THE PROJECT MANUAL.

City of Seattle
SEATTLE DEPARTMENT OF TRANSPORTATION
ORDINANCE NO. . . . . APPROVED . . . . . .
FUND: . . . . . .
SCALE: H. V. INSPECTOR'S BOOK. . . . . .

MAGNOLIA BRIDGE REPLACEMENT
TYPE, SIZE, AND LOCATION
PRESTRESSED GIRDER ALTERNATE

JOB NO.		
	PC	XXXXX
	R/W	XXXXX
	CO	XXXXX
VAULT PLAN NO.		???-???
SHEET XX OF ?		

REGION NO.	STATE	FEDERAL AID PROJECT NO.	SHEET NO.
10	WA		

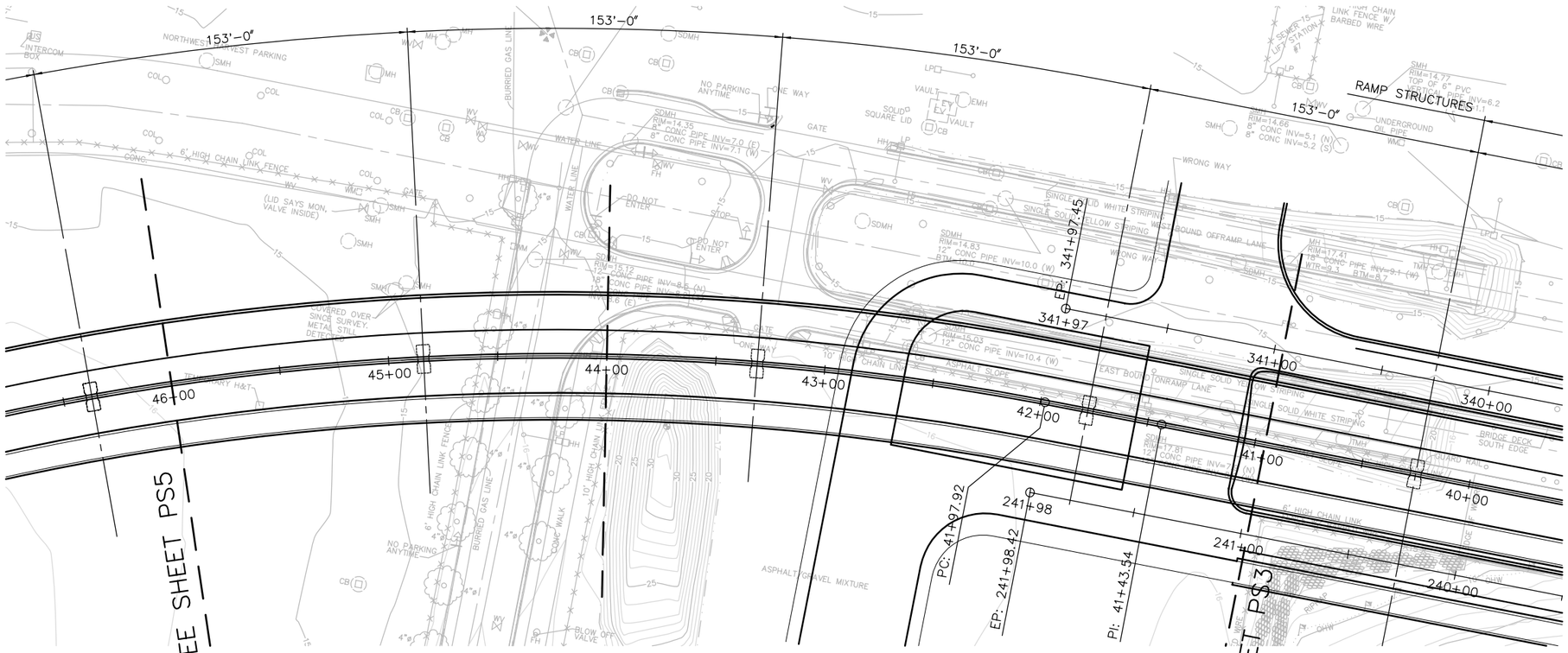

PLAN – MAINLINE
SCALE: 1" = 30'

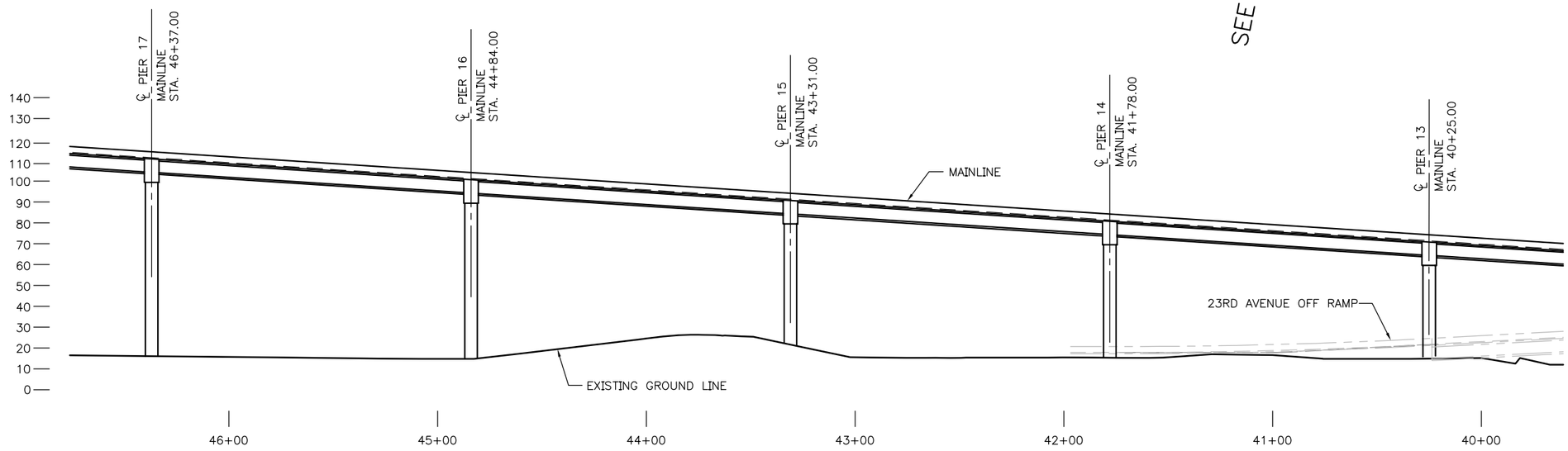

ELEVATION – MAINLINE
SCALE: 1" = 30'

PS4
PLAN AND ELEVATION

N:\36339\Drawings\Sheets\PS_GIRDER\PS_PLEL4.dwg
Nov/16/2006 10:18am

VAULT SERIAL NO. ?????			
MARK	REVISIONS	DATE	MADE / CHK'D / REV'D
	DESCRIPTION		

HNTB

HNTB Corporation
600 108th Avenue NE, Suite 900
Bellevue, WA 98004

Tel (425) 455-3555
Fax (425) 453-9179
www.hntb.com

APPROVED FOR ADVERTISING
KENNETH J. NAKATSU
DEPARTMENT OF EXECUTIVE ADMINISTRATION

SEATTLE, WASHINGTON . . . . . 20 . . .

BY: . . . . . .
DIRECTOR, CONTRACTING SERVICES

NAME OR INITIALS AND DATE	INITIALS AND DATE
DESIGNED	REVIEWED:
CHECKED	DES. SPU CONST.
	SDOT PROJ. MGR.
DRAWN	RECEIVED
CHECKED	REVISED AS BUILT

ALL WORK DONE IN ACCORDANCE WITH THE CITY OF SEATTLE STANDARD PLANS AND SPECIFICATIONS AND OTHER DOCUMENTS CALLED FOR IN SECTION 0-02.3 OF THE PROJECT MANUAL.

City of Seattle
SEATTLE DEPARTMENT
OF TRANSPORTATION

ORDINANCE NO. . . . . APPROVED . . . . . .
FUND: . . . . . .
SCALE: H. V. INSPECTOR'S BOOK. . . . . .

MAGNOLIA BRIDGE REPLACEMENT
TYPE, SIZE, AND LOCATION
PRESTRESSED GIRDER ALTERNATE

JOB NO.		
	PC	XXXXX
	R/W	XXXXX
	CO	XXXXX
VAULT PLAN NO.		???–???
SHEET XX OF ?		

REGION NO.	STATE	FEDERAL AID PROJECT NO.	SHEET NO.
10	WA		

PLAN – MAINLINE

SCALE: 1" = 30'

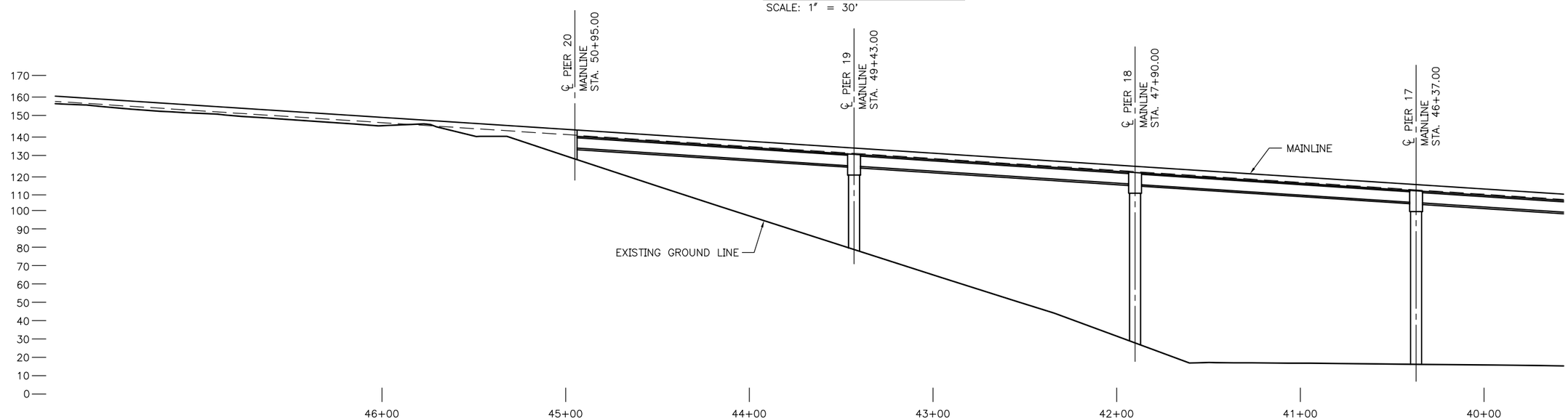

ELEVATION – MAINLINE

SCALE: 1" = 30'

PS5

PLAN AND ELEVATION

N:\36339\Drawings\Sheets\PS_GIRDER\PS_PLEL5.dwg
Nov/16/2006 10:19am

VAULT SERIAL NO. ?????	MARK	DATE	MADE	CHKD	REV'D	DESCRIPTION
REVISIONS						

HNTB

HNTB Corporation
600 108th Avenue NE, Suite 900
Bellevue, WA 98004

Tel (425) 455-3555
Fax (425) 453-9179
www.hntb.com

APPROVED FOR ADVERTISING
KENNETH J. NAKATSU
DEPARTMENT OF EXECUTIVE ADMINISTRATION

SEATTLE, WASHINGTON . . . . . 20 . . . .

BY: . . . . . .

DIRECTOR, CONTRACTING SERVICES

NAME OR INITIALS AND DATE	INITIALS AND DATE
DESIGNED	REVIEWED:
CHECKED	DES. . . . . SPU CONST. . . .
	SDOT. . . . . PROJ. MGR. . . .
DRAWN	RECEIVED . . . . .
CHECKED	REVISED AS BUILT . . . . .

ALL WORK DONE IN ACCORDANCE WITH THE CITY OF SEATTLE STANDARD PLANS AND SPECIFICATIONS AND OTHER DOCUMENTS CALLED FOR IN SECTION 0-02.3 OF THE PROJECT MANUAL.

City of Seattle
SEATTLE DEPARTMENT
OF TRANSPORTATION

ORDINANCE NO. . . . . APPROVED . . . . . .

FUND: . . . . . .

SCALE: H. V. INSPECTOR'S BOOK. . . . . .

MAGNOLIA BRIDGE REPLACEMENT
TYPE, SIZE, AND LOCATION
PRESTRESSED GIRDER ALTERNATE

JOB NO.		
	PC	XXXXX
	R/W	XXXXX
	CO	XXXXX

VAULT PLAN NO. ???-???

SHEET XX OF ?

REGION NO.	STATE	FEDERAL AID PROJECT NO.	SHEET NO.
10	WA		

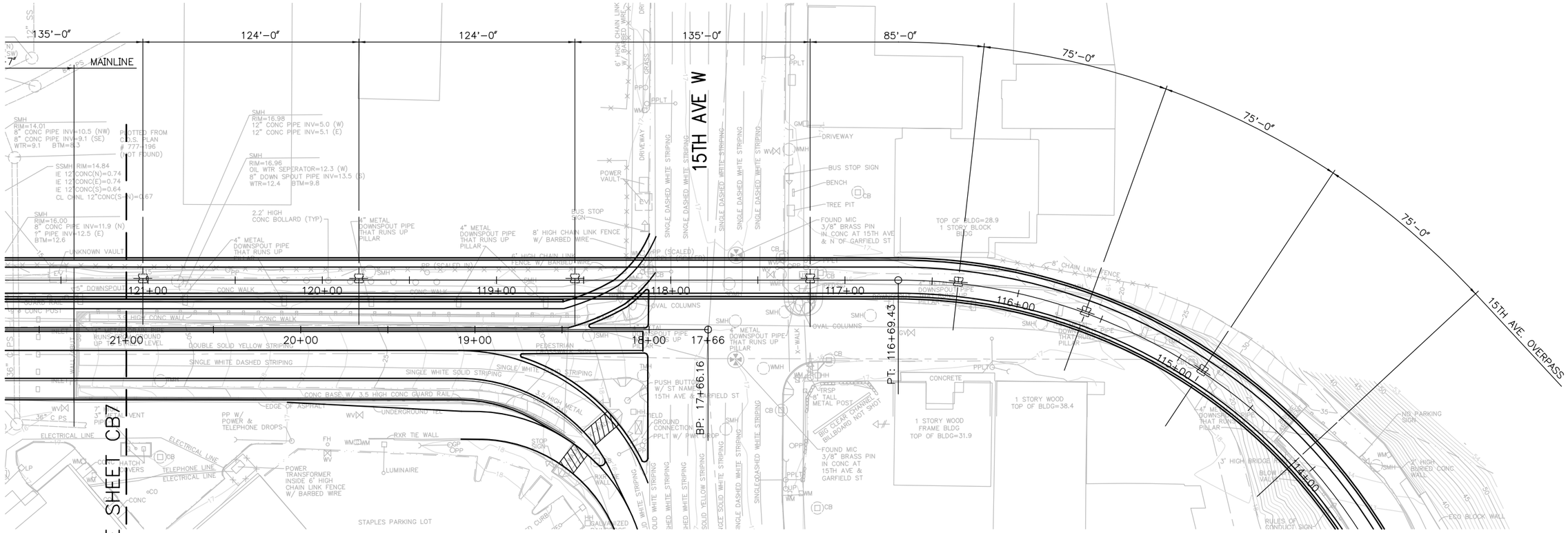

PLAN – 15TH AVENUE OVERPASS

SCALE: 1" = 30'

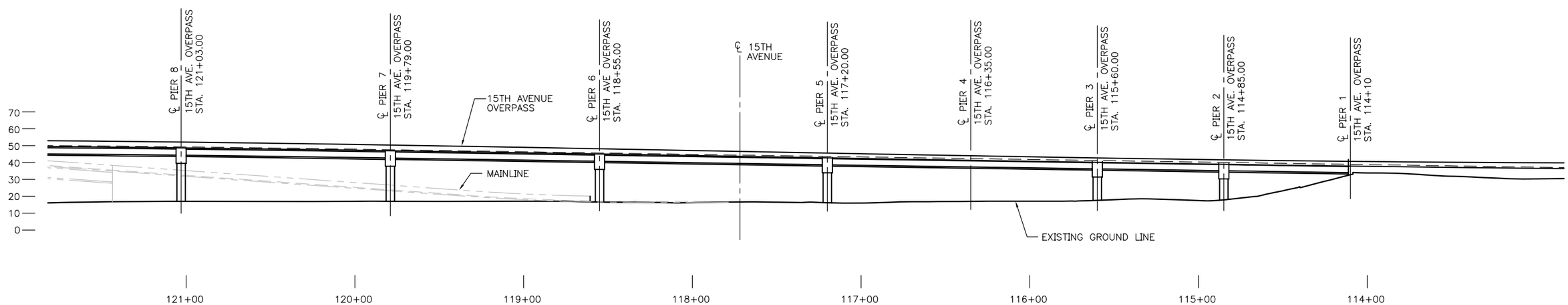

ELEVATION – 15TH AVENUE OVERPASS

SCALE: 1" = 30'

PS6
PLAN AND ELEVATION

N:\36339\Drawings\Sheets\PS_GIRDER\PS_PLEL6.dwg
Nov/16/2006 10:20am

VAULT SERIAL NO. ????	REVISIONS		
MARK	DATE	MADE	CHK'D	REV'D	DESCRIPTION

HNTB

HNTB Corporation
600 108th Avenue NE, Suite 900
Bellevue, WA 98004

Tel (425) 455-3555
Fax (425) 453-9179
www.hntb.com

APPROVED FOR ADVERTISING
KENNETH J. NAKATSU
DEPARTMENT OF EXECUTIVE ADMINISTRATION

SEATTLE, WASHINGTON . . . . . 20. . . .

BY: . . . . . .

DIRECTOR, CONTRACTING SERVICES

NAME OR INITIALS AND DATE	INITIALS AND DATE
DESIGNED	REVIEWED:
CHECKED	DES. . . . . SPU CONST. . . .
	SDOT. . . . . PROJ. MGR.
DRAWN	RECEIVED . . . . .
CHECKED	REVISED AS BUILT . . . . .

ALL WORK DONE IN ACCORDANCE WITH THE CITY OF SEATTLE STANDARD PLANS AND SPECIFICATIONS AND OTHER DOCUMENTS CALLED FOR IN SECTION 0-02.3 OF THE PROJECT MANUAL.

City of Seattle
SEATTLE DEPARTMENT OF TRANSPORTATION

ORDINANCE NO. . . . . APPROVED . . . . . .

FUND: . . . . . .

SCALE: H. V. INSPECTOR'S BOOK. . . . . .

MAGNOLIA BRIDGE REPLACEMENT TYPE, SIZE, AND LOCATION PRESTRESSED GIRDER ALTERNATE

JOB NO.		
	PC	XXXXX
	R/W	XXXXX
	CO	XXXXX

VAULT PLAN NO. ???–???

SHEET XX OF ?

REGION NO.	STATE	FEDERAL AID PROJECT NO.	SHEET NO.
10	WA		

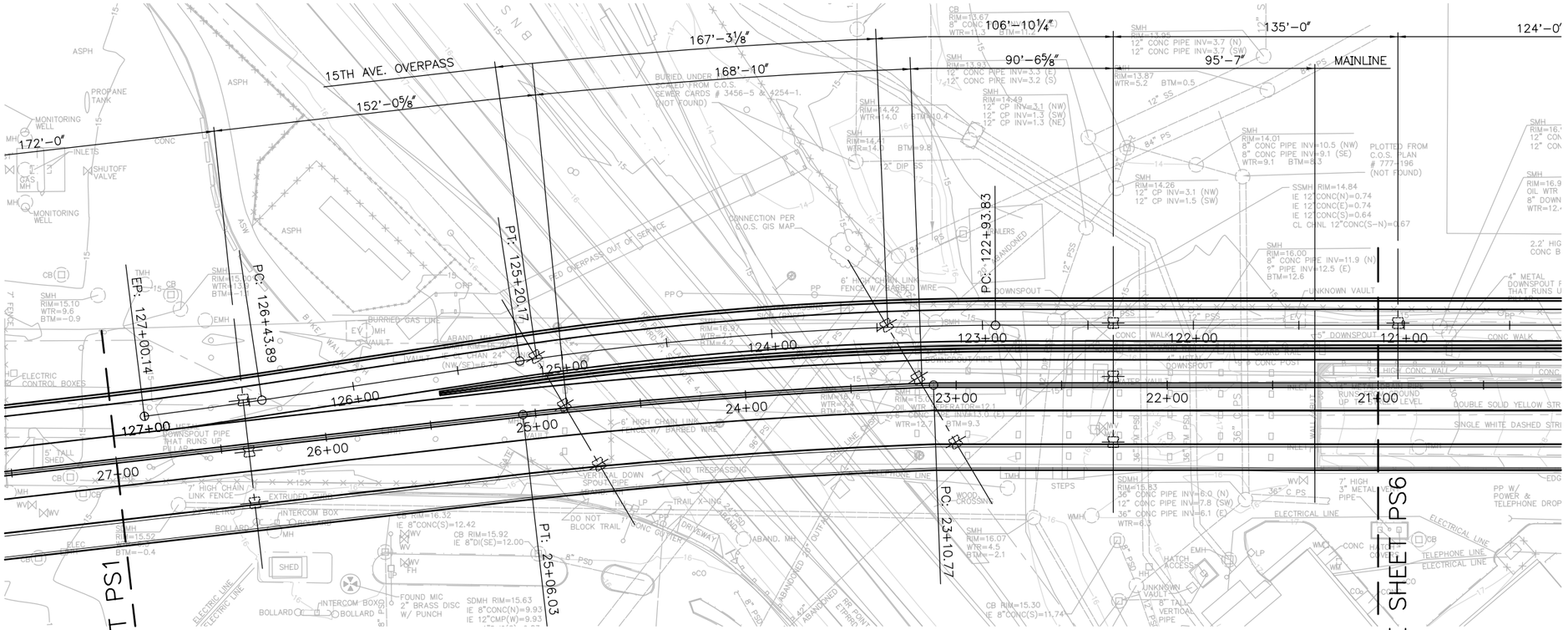

PLAN – 15TH AVENUE OVERPASS

SCALE: 1" = 30'

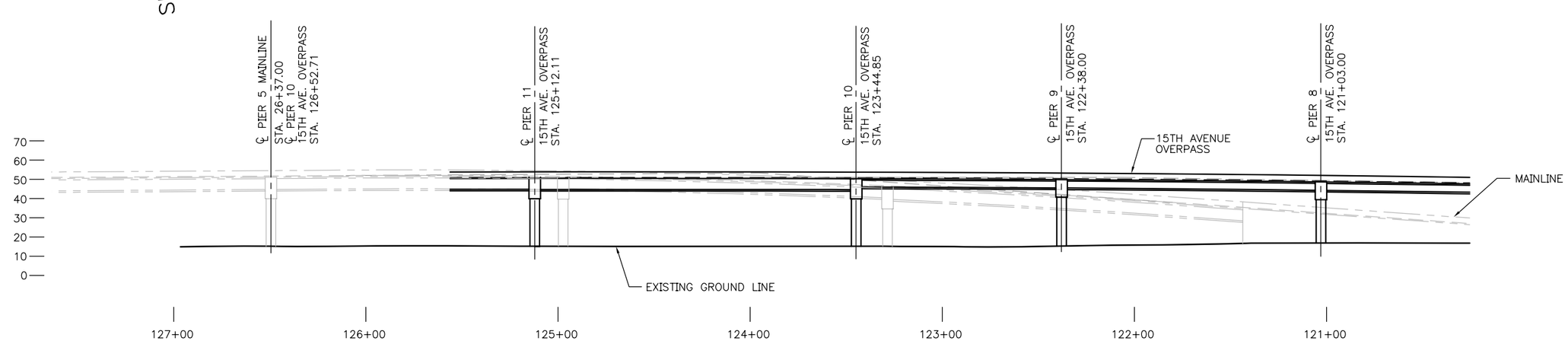

ELEVATION – 15TH AVENUE OVERPASS

SCALE: 1" = 30'

PS7
PLAN AND ELEVATION

N:\36339\Drawings\Sheets\PS_GIRDER\PS_PLEL7.dwg
Nov/16/2006 10:21am

VAULT SERIAL NO. ????

REVISIONS			
MARK	DATE	CHK'D	REVD
MADE			
DESCRIPTION			

HNTB

HNTB Corporation
600 108th Avenue NE, Suite 900
Bellevue, WA 98004

Tel (425) 455-3555
Fax (425) 453-9179
www.hntb.com

APPROVED FOR ADVERTISING
KENNETH J. NAKATSU
DEPARTMENT OF EXECUTIVE ADMINISTRATION

SEATTLE, WASHINGTON . . . . . 20 . . . .

BY: . . . . . .
DIRECTOR, CONTRACTING SERVICES

NAME OR INITIALS AND DATE	INITIALS AND DATE
DESIGNED	REVIEWED:
CHECKED	DES. SPU CONST.
	SDOT PROJ. MGR.
DRAWN	RECEIVED
CHECKED	REVISED AS BUILT

ALL WORK DONE IN ACCORDANCE WITH THE CITY OF SEATTLE STANDARD PLANS AND SPECIFICATIONS AND OTHER DOCUMENTS CALLED FOR IN SECTION 0-02.3 OF THE PROJECT MANUAL.

City of Seattle
SEATTLE DEPARTMENT OF TRANSPORTATION

ORDINANCE NO. . . . . APPROVED . . . . .
FUND: . . . . .
SCALE: H. V. INSPECTOR'S BOOK. . . . . .

MAGNOLIA BRIDGE REPLACEMENT
TYPE, SIZE, AND LOCATION
PRESTRESSED GIRDER ALTERNATE

JOB NO.		
	PC	XXXXX
	R/W	XXXXX
	CO	XXXXX

VAULT PLAN NO. ???–???

SHEET XX OF ?

REGION NO.	STATE	FEDERAL AID PROJECT NO.	SHEET NO.
10	WA		

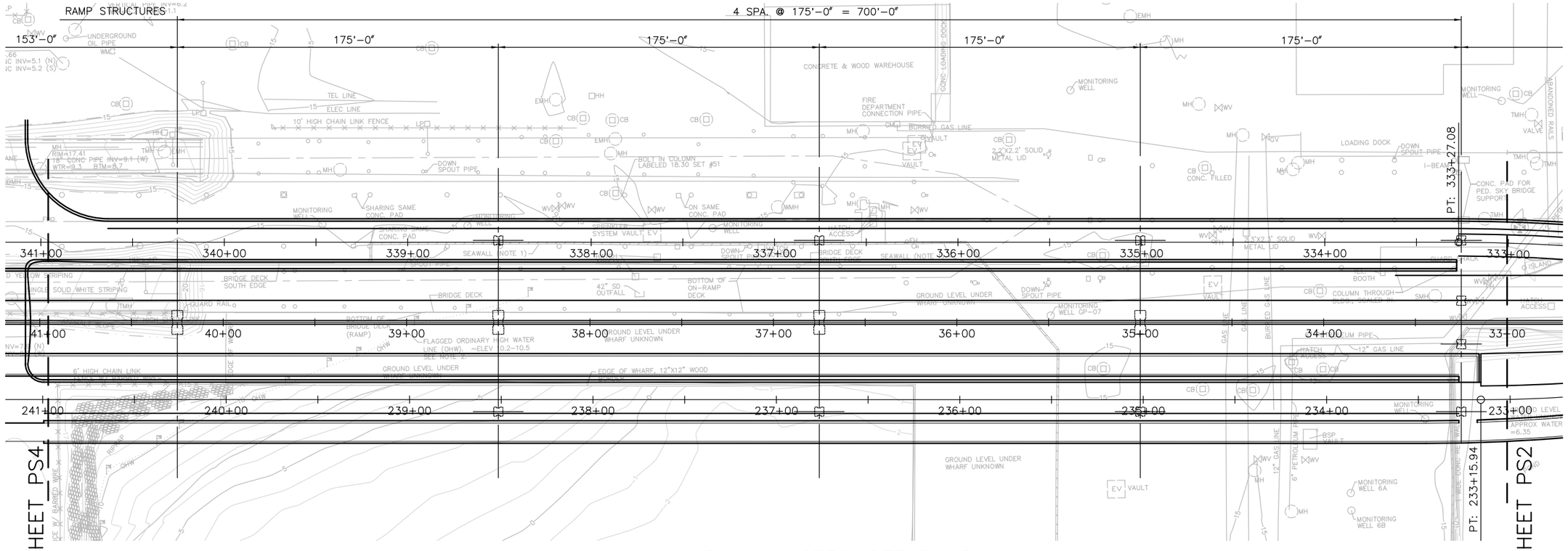

PLAN – 23RD OFF RAMP

SCALE: 1" = 30'

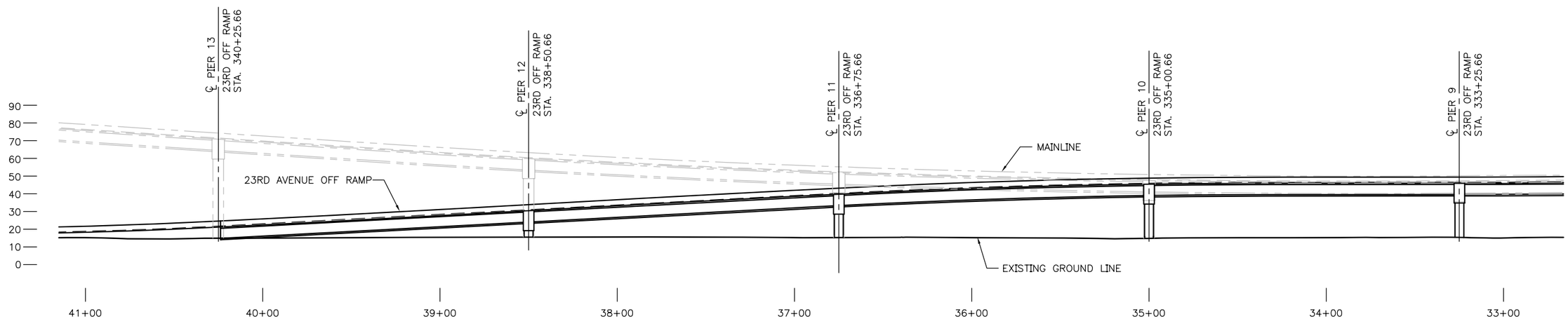

ELEVATION – 23RD OFF RAMP

SCALE: 1" = 30'

PS8
PLAN AND ELEVATION

N:\36339\Drawings\Sheets\PS_GIRDER\PS_PLEL8.dwg
Nov/16/2006 10:22am

VAULT SERIAL NO. ?????	MARK	DATE	MADE (CHK'D)	REV'D	DESCRIPTION
REVISIONS					

HNTB

HNTB Corporation
600 108th Avenue NE, Suite 900
Bellevue, WA 98004

Tel (425) 455-3555
Fax (425) 453-9179
www.hntb.com

APPROVED FOR ADVERTISING
KENNETH J. NAKATSU
DEPARTMENT OF EXECUTIVE ADMINISTRATION

SEATTLE, WASHINGTON . . . . . 20 . . . .

BY: . . . . . .
DIRECTOR, CONTRACTING SERVICES

NAME OR INITIALS AND DATE	INITIALS AND DATE
DESIGNED	REVIEWED:
CHECKED	DES. SPU CONST.
	SDOT PROJ. MGR.
DRAWN	RECEIVED
CHECKED	REVISED AS BUILT

ALL WORK DONE IN ACCORDANCE WITH THE CITY OF SEATTLE STANDARD PLANS AND SPECIFICATIONS AND OTHER DOCUMENTS CALLED FOR IN SECTION 0-02.3 OF THE PROJECT MANUAL.

City of Seattle
SEATTLE DEPARTMENT OF TRANSPORTATION

ORDINANCE NO. . . . . APPROVED . . . . . .
FUND: . . . . . .
SCALE: H. V. INSPECTOR'S BOOK. . . . . .

MAGNOLIA BRIDGE REPLACEMENT TYPE, SIZE, AND LOCATION PRESTRESSED GIRDER ALTERNATE

JOB NO.		
	PC	xxxxx
	R/W	xxxxx
	CO	xxxxx
VAULT PLAN NO.		???-???
SHEET XX OF ?		

REGION NO.	STATE	FEDERAL AID PROJECT NO.	SHEET NO.
10	WA		

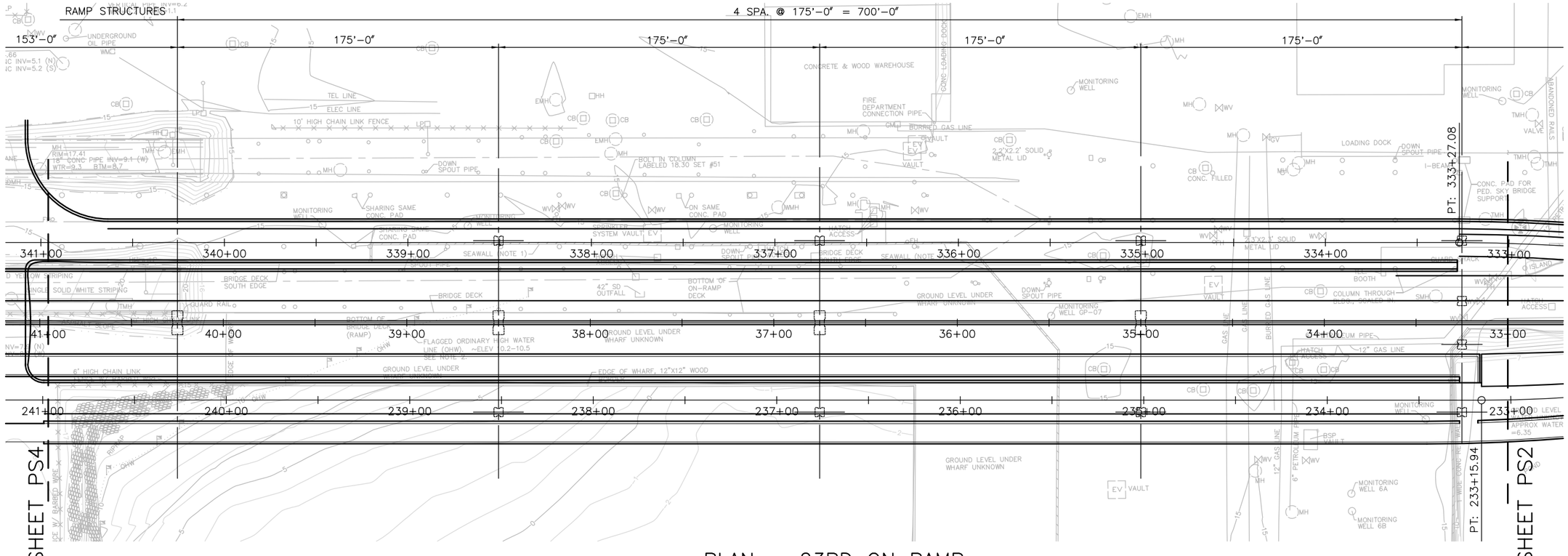

PLAN – 23RD ON RAMP

SCALE: 1" = 30'

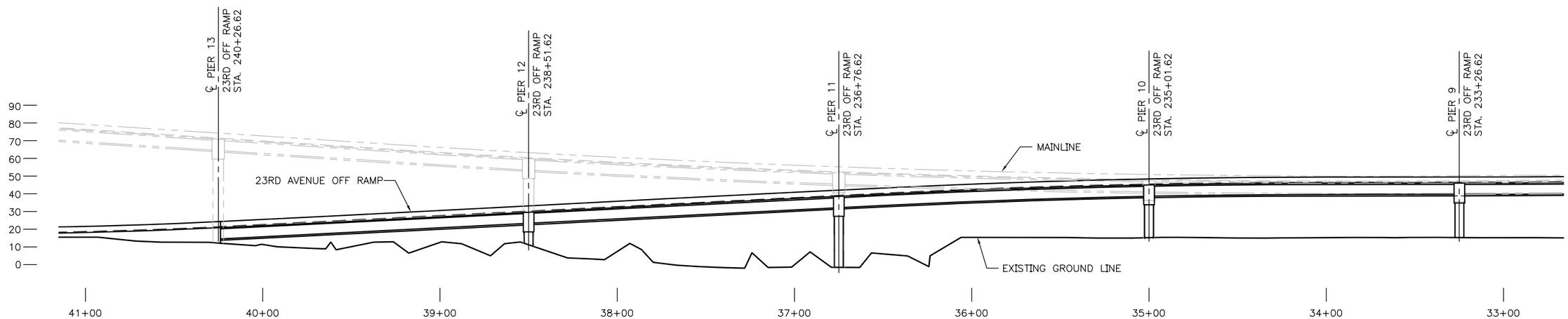

ELEVATION – 23RD ON RAMP

SCALE: 1" = 30'

PS9
PLAN AND ELEVATION

N:\36339\Drawings\Sheets\PS_GIRDER\PS_PLEL9.dwg
Nov/16/2006 10:23am

VAULT SERIAL NO. ?????	MARK	DATE	MADE (CHK'D)	REV'D	DESCRIPTION
REVISIONS					

HNTB

HNTB Corporation
600 108th Avenue NE, Suite 900
Bellevue, WA 98004

Tel (425) 455-3555
Fax (425) 453-9179
www.hntb.com

APPROVED FOR ADVERTISING
KENNETH J. NAKATSU
DEPARTMENT OF EXECUTIVE ADMINISTRATION

SEATTLE, WASHINGTON . . . . . 20 . . . .

BY: . . . . . .
DIRECTOR, CONTRACTING SERVICES

NAME OR INITIALS AND DATE	INITIALS AND DATE
DESIGNED	REVIEWED:
CHECKED	DES. SPU CONST.
	SDOT PROJ. MGR.
DRAWN	RECEIVED
CHECKED	REVISED AS BUILT

ALL WORK DONE IN ACCORDANCE WITH THE CITY OF SEATTLE STANDARD PLANS AND SPECIFICATIONS AND OTHER DOCUMENTS CALLED FOR IN SECTION 0-02.3 OF THE PROJECT MANUAL.

City of Seattle
SEATTLE DEPARTMENT OF TRANSPORTATION

ORDINANCE NO. . . . . APPROVED . . . . . .
FUND: . . . . . .
SCALE: H. V. INSPECTOR'S BOOK. . . . . .

MAGNOLIA BRIDGE REPLACEMENT
TYPE, SIZE, AND LOCATION
PRESTRESSED GIRDER ALTERNATE

JOB NO.		
	PC	XXXXX
	R/W	XXXXX
	CO	XXXXX

VAULT PLAN NO. ???-???

SHEET XX OF ?

REGION NO.	STATE	FEDERAL AID PROJECT NO.	SHEET NO.
10	WA		

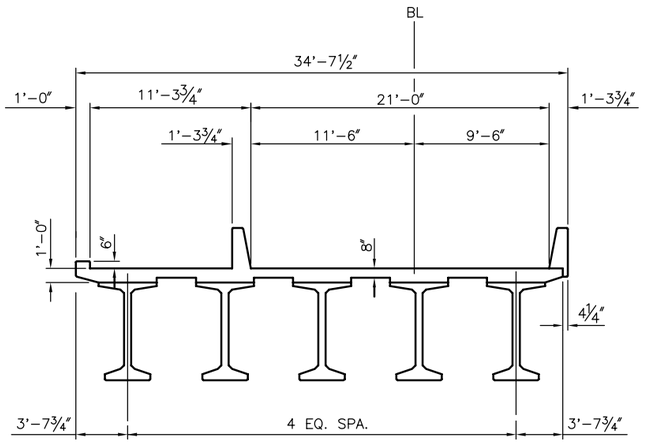

TYPICAL SECTION
23RD ON RAMP

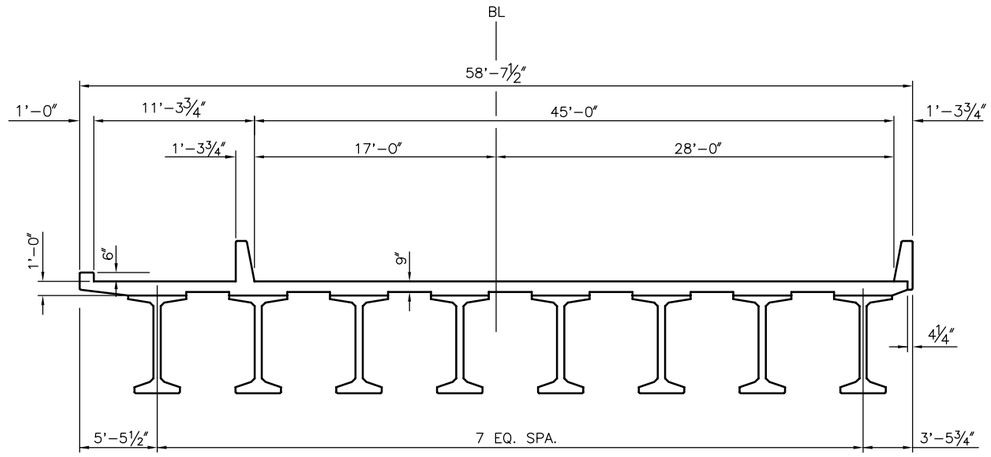

TYPICAL SECTION
MAINLINE AT PIER

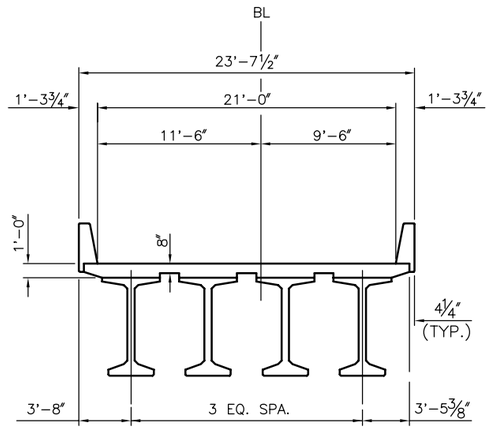

TYPICAL SECTION
23RD OFF RAMP

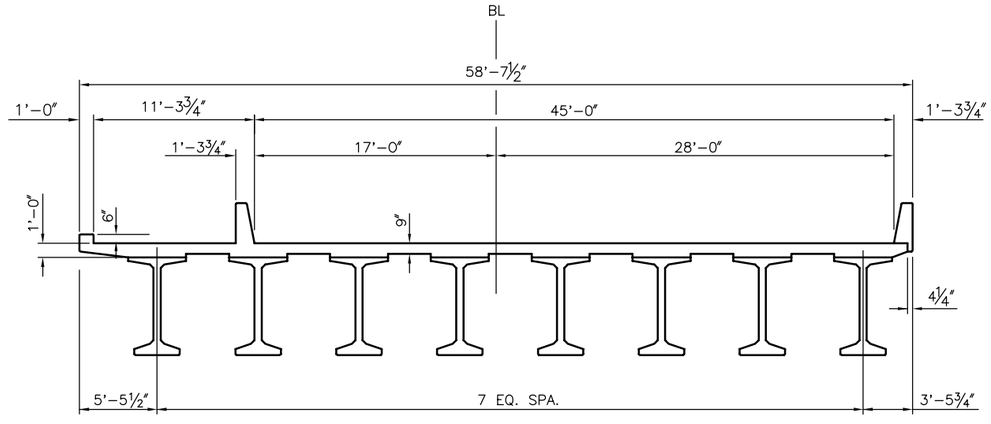

TYPICAL SECTION
MAINLINE AT PIER

PS10
TYPICAL SECTIONS

N:\36339\Drawings\Sheets\PS_GIRDER\PS_TSEC1.dwg
Nov/16/2006 10:23am

VAULT SERIAL NO. ????			
REVISIONS			
MARK	DATE	CHK'D	REV'D
MADE			
DESCRIPTION			

HNTB

HNTB Corporation
600 108th Avenue NE, Suite 900
Bellevue, WA 98004

Tel (425) 455-3555
Fax (425) 453-9179
www.hntb.com

APPROVED FOR ADVERTISING
KENNETH J. NAKATSU
DEPARTMENT OF EXECUTIVE ADMINISTRATION

SEATTLE, WASHINGTON . 20 .

BY: .
DIRECTOR, CONTRACTING SERVICES

NAME OR INITIALS AND DATE	INITIALS AND DATE
DESIGNED .	REVIEWED:
CHECKED .	DES. . SPU CONST. .
	SDOT. . PROJ. MGR. .
DRAWN.	RECEIVED .
CHECKED.	REVISED AS BUILT .

ALL WORK DONE IN ACCORDANCE WITH THE CITY OF SEATTLE STANDARD PLANS AND SPECIFICATIONS AND OTHER DOCUMENTS CALLED FOR IN SECTION 0-02.3 OF THE PROJECT MANUAL.

City of Seattle
SEATTLE DEPARTMENT
OF TRANSPORTATION

ORDINANCE NO. . APPROVED .
FUND: .
SCALE: H. V. INSPECTOR'S BOOK.

MAGNOLIA BRIDGE REPLACEMENT
TYPE, SIZE, AND LOCATION
PRESTRESSED GIRDER ALTERNATIVE

JOB NO.		
	PC	XXXXX
	R/W	XXXXX
	CO	XXXXX

VAULT PLAN NO. ???-???

SHEET XX OF ?

REGION NO.	STATE	FEDERAL AID PROJECT NO.	SHEET NO.
10	WA		

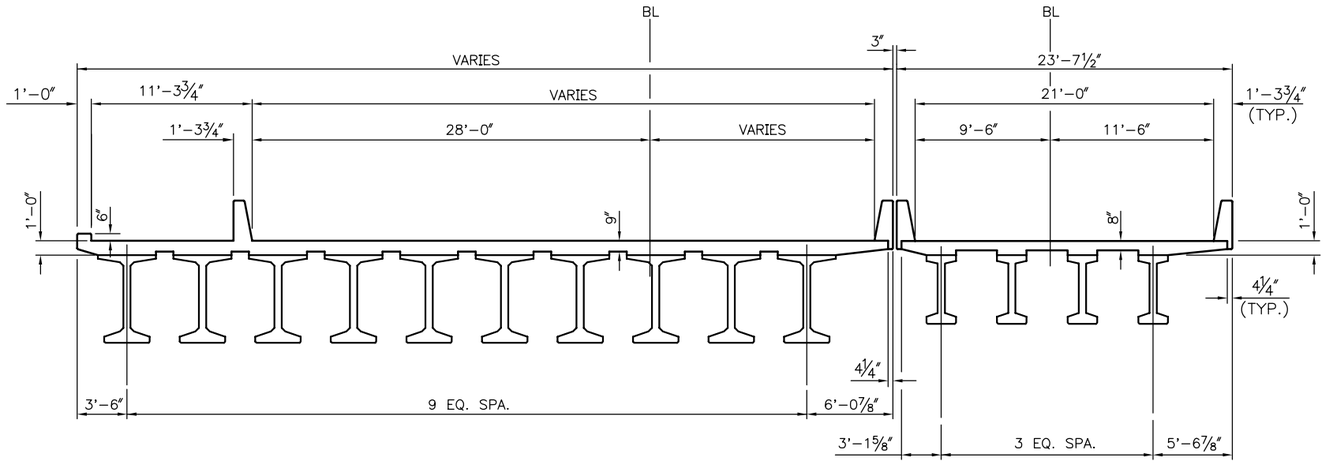

TYPICAL SECTION
OVER RAILROAD

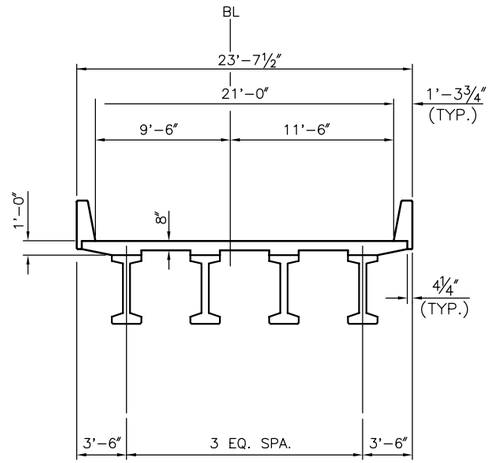

TYPICAL SECTION
15TH AVE. OVERPASS

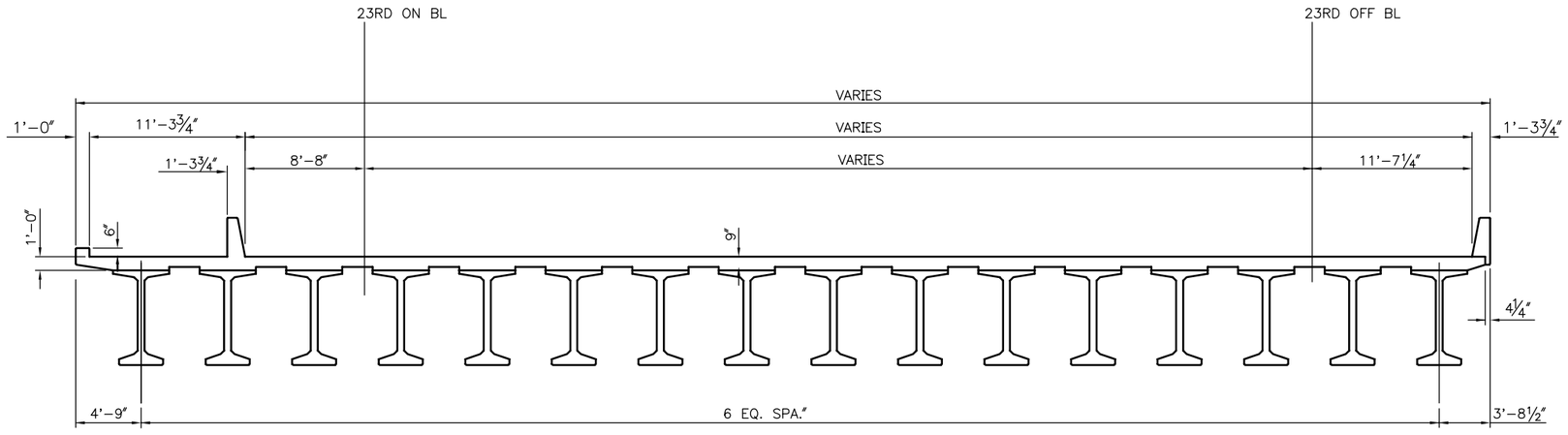

TYPICAL SECTION
MAINLINE AT LOW LEVEL

PS11
TYPICAL SECTIONS

N:\36339\Drawings\Sheets\PS_GIRDER\PS_TSEC2.dwg
Nov/16/2006 10:24am

VAULT SERIAL NO. ????

MARK	DATE	CHK'D	REV'D	DESCRIPTION

REVISIONS

HNTB

HNTB Corporation
600 108th Avenue NE, Suite 900
Bellevue, WA 98004

Tel (425) 455-3555
Fax (425) 453-9179
www.hntb.com

APPROVED FOR ADVERTISING
KENNETH J. NAKATSU
DEPARTMENT OF EXECUTIVE ADMINISTRATION

SEATTLE, WASHINGTON . . 20 . .

BY: . .

DIRECTOR, CONTRACTING SERVICES

NAME OR INITIALS AND DATE	INITIALS AND DATE
DESIGNED . CHECKED .	REVIEWED: DES. . SPU CONST. . SDOT. . PROJ. MGR. .
DRAWN. CHECKED.	RECEIVED .
	REVISED AS BUILT .

ALL WORK DONE IN ACCORDANCE WITH THE CITY OF SEATTLE STANDARD PLANS AND SPECIFICATIONS AND OTHER DOCUMENTS CALLED FOR IN SECTION 0-02.3 OF THE PROJECT MANUAL.

City of Seattle
SEATTLE DEPARTMENT
OF TRANSPORTATION

ORDINANCE NO. . . APPROVED . .
FUND: . .
SCALE: H. V. INSPECTOR'S BOOK.

MAGNOLIA BRIDGE REPLACEMENT
TYPE, SIZE, AND LOCATION
PRESTRESSED GIRDER ALTERNATIVE

JOB NO.		
	PC	xxxxx
	R/W	xxxxx
	CO	xxxxx

VAULT PLAN NO. ???-???

SHEET XX OF ?