Survey Control Point Table				
Point #	Northing	Easting	Elevation	Description
28	193689.15	1285458.62	43.06	MIC 37790803
29	193509.22	1285454.55	45.59	MIC 37790804
130	193362.57	1285451.27	47.26	MIC 39163201

HORIZONTAL DATUM: NAD83–2011 EPOCH 2010.00
DERIVED FROM THE WSRN AND NGS CORS

VERTICAL DATUM: THE VERTICAL DATUM IS NAVD88
DERIVED FROM THE WSRN AND NGS CORS USING GEOID 12A

BASIS OF BEARING: WASHINGTON STATE PLANE
COORDINATE SYSTEM, NORTH ZONE

VERTICAL BENCHMARKS: SNV–2525, SNV–2526

PROJECT FIELD BOOK: #3916 PGS 32–36

PROJECT SCALE FACTOR: 0.999996074

CONVERGENCE ANGLE: –1°04'10.65224"

PROJECT COMBINED GRID FACTOR: 0.999997547

SCALE FACTOR BASIS:
NORTHING: 193509.22 EASTING: 1285454.55

PROJECT NUMBER: NS13212 G61

PROJECT NAME: RAINIER AVE PEDESTRIAN ENHANCEMENTS

SURVEY PROJECT FOLDER NUMBER: 261–926

RESEARCH FIELD BOOKS:

REFERENCE DOCUMENTS: 265–143

DATE: 11–21–2014

PRJ. SURVEYOR: M. KIMBOROWICZ

PRIMARY CREW: E. NEWELL
C. BECK

OFFICE TECH: J. GRAHAM

R/W CREATED BY: M. KIMBOROWICZ

GEOREGISTRATION NOTES: SE 34–24–4,
SW 35–24–4

COMMENTS:

NOTES:
FIELD MEASUREMENTS FOR THIS SURVEY PERFORMED WITH A 1" LEICA TOTAL STATION USING TRAVERSE METHODS THAT MEET OR EXCEED ACCURACY REQUIREMENTS CONTAINED IN WAC 332.130.090.

THIS SURVEY WAS CONDUCTED WITHOUT THE BENEFIT OF A CURRENT TITLE REPORT AND THEREFORE DOES NOT PURPORT TO SHOW ALL EASEMENTS OR RESTRICTIONS OF RECORD, IN ANY.

SNV–2525: FND BRASS CAP 3' NORTH AND 0.5' WEST OF THE BACK OF W AND ASPH PARKING LOT INT IN THE SE CORNER AT THE INT OF S DIRECTOR ST (TO THE EAST) & RAINIER AVE S
ELEV=44.85'

SNV–2526: FND 2" BRASS CAP STAMPED "COS 2526" AT THE INT BACK OF W IN THE SW CORNER OF INT OF 52ND AVE S & RAINIER AVE S
ELEV=46.06'

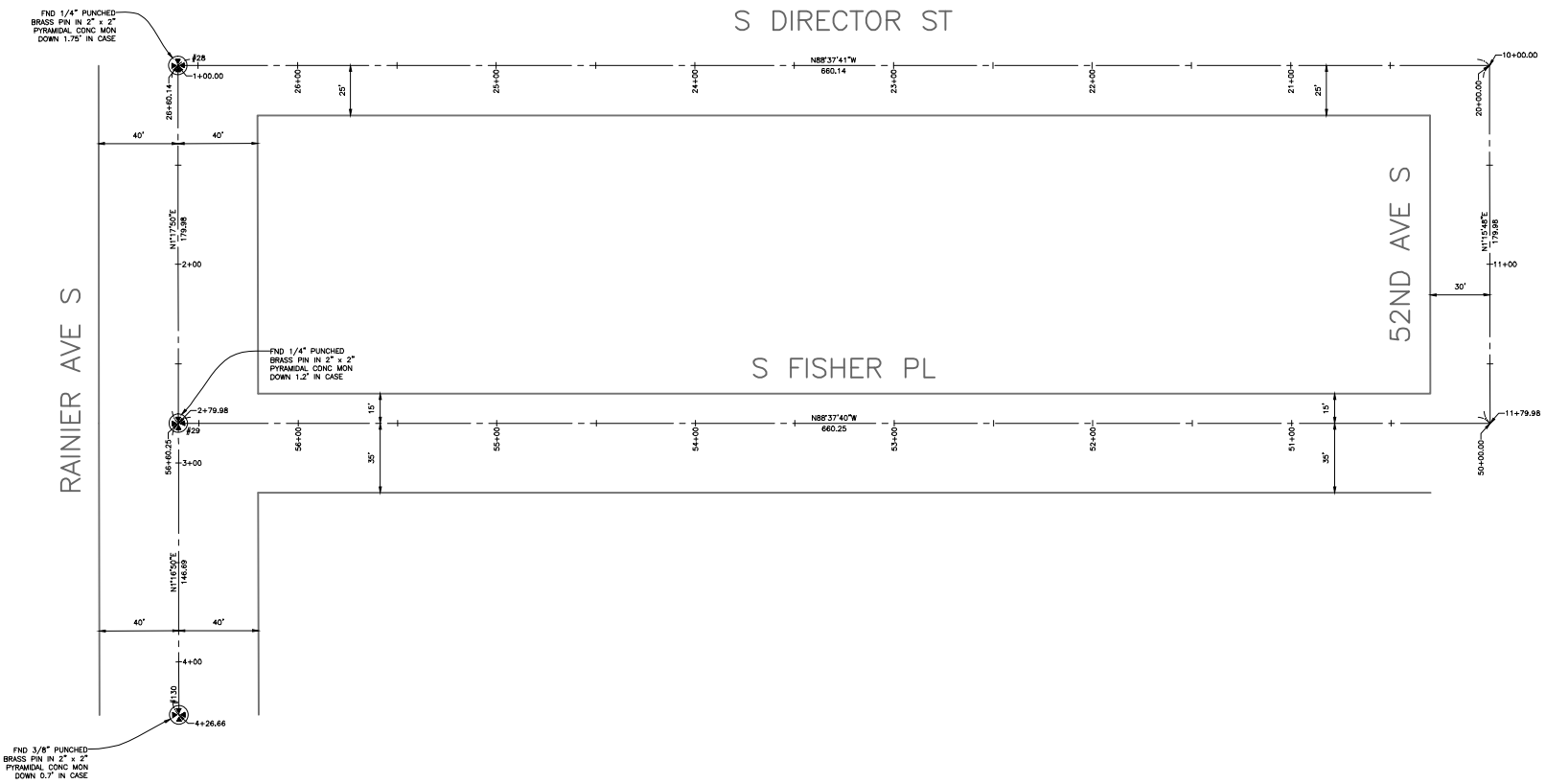

SC1
SURVEY CONTROL
S FISHER PL

VAULT SERIAL NO.	DATE	MARK	NATURE REVISIONS	MADE	CHK'D	REV'D
36469						

90% REVIEW
NOT FOR CONSTRUCTION
JUNE 2015

APPROVED FOR ADVERTISING
NANCY LOCKE
DEPARTMENT OF FINANCE & ADMINISTRATIVE SERVICES
SEATTLE, WASHINGTON . . . . . 20 . .
BY: . . . . . .
PURCHASING & CONTRACTING SERVICES DIRECTOR

INITIALS AND DATE	INITIALS AND DATE
DESIGNED -----	REVIEWED:
CHECKED -----	DES. CONST.
DRAWN -----	SDOT PROJ. MGR.
CHECKED	RECEIVED -----
	REVISED AS BUILT -----

ALL WORK SHALL BE DONE IN ACCORDANCE WITH THE CITY OF SEATTLE STANDARD PLANS AND SPECIFICATIONS AND OTHER DOCUMENTS CALLED FOR IN SECTION 0–02.3 OF THE PROJECT MANUAL.

MARK H. KIMBOROWICZ
STATE OF WASHINGTON
38962
REGISTERED PROFESSIONAL LAND SURVEYOR

City of Seattle
Seattle Department of Transportation
ORDINANCE NO. . . . . APPROVED. . . . . .
FUND: . . . . . .
SCALE: H. 1"=20', V. 1"=10' INSPECTOR'S BOOK . . . . . .

RAINIER AVENUE PEDESTRIAN ENHANCEMENTS

JOB NO.		
	PC	TS6452A
	R/W	----
	CO	TS6452C
VAULT PLAN NO.	790–255	
SHEET	3 OF 26	

P:\STDrafter\TS6405A Rainier Ave Enhancements\A_PLOT FILES\TS6405A_P_SVC1.dwg
Jun–05–15 1:08pm
790–255–3

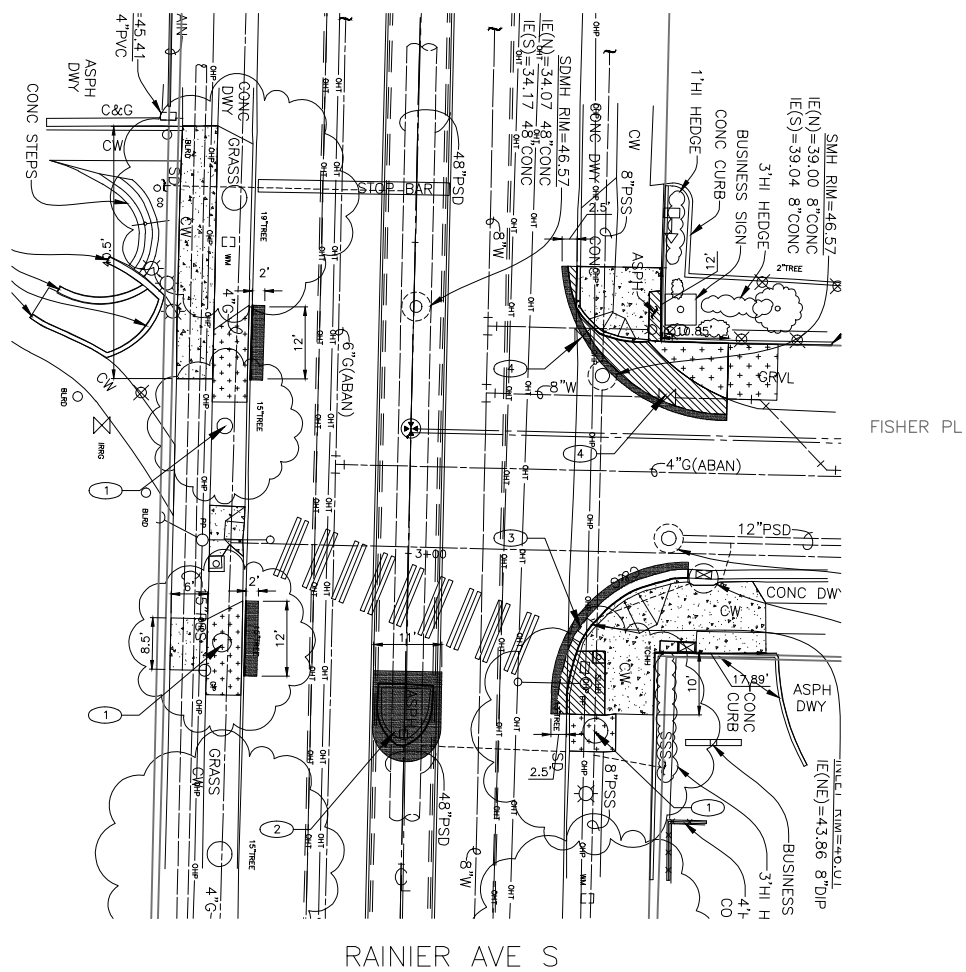

REMOVAL LEGEND

- REMOVE CEM CONC SIDEWALK
- REMOVE PAVEMENT
- COMMON EXCAVATION
- REMOVE ASPHALT OVERLAY
- REMOVE CURB OR CURB AND GUTTER.
- SAWCUT, FULL DEPTH. SEE SECTION 2-02.3(3)C AND 2-02.3(6)A.

REMOVAL NOTES

1. REMOVE TREE (AND STUMP)
2. REMOVE ISLAND
3. ADJUST EX. INLET
4. ADJUST EX. VALVE BOX

GENERAL NOTES

1. PRESERVE AND PROTECT ALL EXISTING FEATURES UNLESS NOTED OTHERWISE. SEE 1-07.16 AND 1-07.17.
2. SEE SG DWGS FOR SIGNAL AND LIGHTING REMOVAL
3. SEE CH DWGS FOR CHANNELIZATION AND SIGNING REMOVAL
4. THIS DRAWING INDICATES THE REMOVAL WORK TO DO DONE. FOR METHOD OF PAYMENT, SEE INDIVIDUAL PAYMENT SECTION IN THE SPECIFICATIONS.

N

10 5 0 10 20
SCALE IN FEET

SP1
SITE PREPARATION PLAN
S FISHER PL

VAULT SERIAL NO.	DATE	MARK	NATURE REVISIONS	MADE	CHK'D	REV'D
36469						

P:\STDrafter\TS6405A Rainier Ave Enhancements\A_PLOT FILES\TS6405A_P_SP00.dwg
Jun-10-15 11:34am

790-255####4

90% REVIEW
NOT FOR CONSTRUCTION
JUNE 2015

APPROVED FOR ADVERTISING
NANCY LOCKE
DEPARTMENT OF FINANCE & ADMINISTRATIVE SERVICES
SEATTLE, WASHINGTON . . . . . 20 . .
BY: PURCHASING & CONTRACTING SERVICES DIRECTOR

INITIALS AND DATE
DESIGNED ----
CHECKED ----
DRAWN ----
CHECKED
ALL WORK SHALL BE DONE IN ACCORDANCE WITH THE CITY OF SEATTLE STANDARD PLANS AND SPECIFICATIONS AND OTHER DOCUMENTS CALLED FOR IN SECTION 0-02.3 OF THE PROJECT MANUAL.

INITIALS AND DATE
REVIEWED:
DES. CONST.
SDOT PROJ. MGR.
RECEIVED ----
REVISED AS BUILT ----

City of Seattle
Seattle Department of Transportation
ORDINANCE NO. Ordinance Number . . APPROVED . . . . . .
FUND: Fund . . . . . .
SCALE: H. 1"=20', V. 1"=10' INSPECTOR'S BOOK . . . . . .

RAINIER AVENUE PEDESTRIAN ENHANCEMENTS

JOB NO. PC TS6464A
R/W ----
CO TS6464C
VAULT PLAN NO. 790-255
SHEET 4 OF 26

PAVING LEGEND

- CEM CONC SIDEWALK W/ 25% POZZOLANS, PER STD PLAN 420.
- TURF (LAWN) AREA, PER STD PLAN 142.
- 2" HMA CL ½".
- CURB RAMP W/25% POZZOLANS PER STD PLAN 422A.
- CEM CONC CURB.
- CEM CONC CURB AND GUTTER PER STD PLAN 410B.

CONSTRUCTION NOTES

1. PROTECT WATER VALVE
2. RELOCATE PEDESTRIAN SIGNAL, SEE SIGNAL PLANS

SEE CR1 FOR CURB RAMP AND RADIUS DETAILS

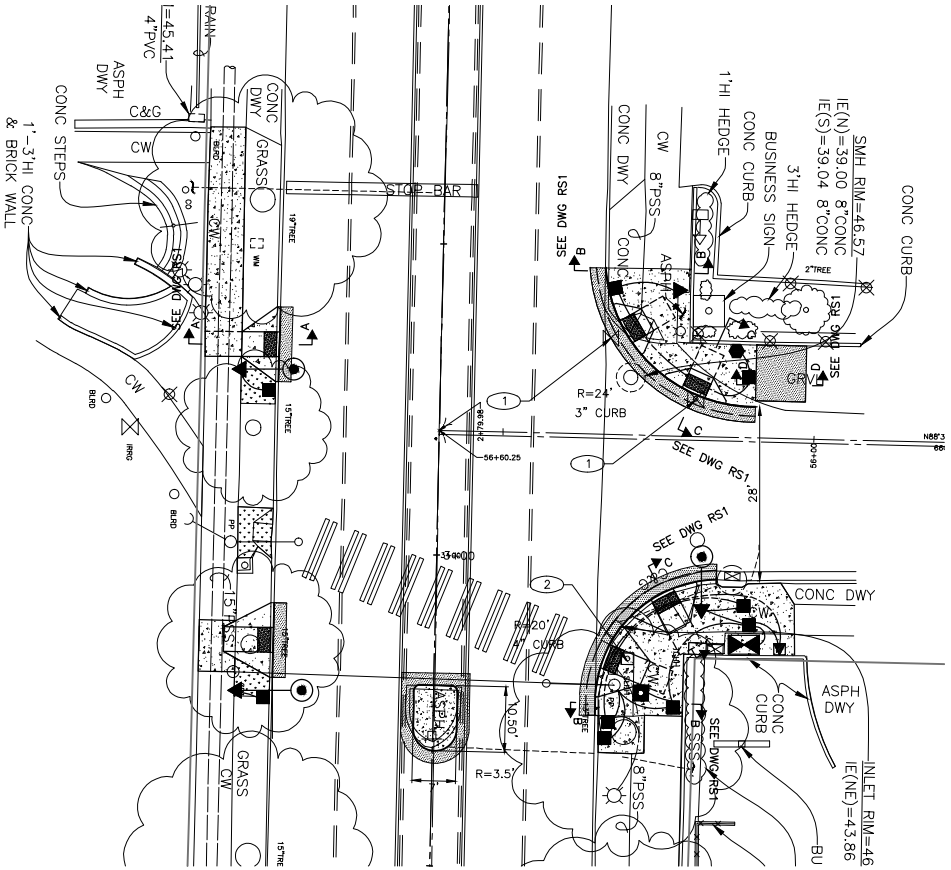

RAINIER AVE S

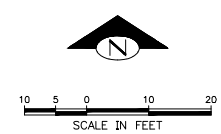

PV1
PAVING PLAN
S FISHER PL

VAULT SERIAL NO.	DATE	MARK	NATURE REVISIONS	MADE	CHK'D	REV'D
36469						

P:\STDrafter\TS6405A Rainier Ave Enhancements\A_PLOT FILES\TS6405A_P_PV00.dwg
Jun-10-15 11:39am

90% REVIEW
NOT FOR CONSTRUCTION
JUNE 2015

APPROVED FOR ADVERTISING
NANCY LOCKE
DEPARTMENT OF FINANCE & ADMINISTRATIVE SERVICES
SEATTLE, WASHINGTON . . . . . 20 . .
BY: PURCHASING & CONTRACTING SERVICES DIRECTOR

NAME OR INITIALS AND DATE
DESIGNED ----
CHECKED ----
DRAWN ----
CHECKED

INITIALS AND DATE
REVIEWED:
DES. CONST.
SDOT PROJ. MGR.
RECEIVED
REVISED AS BUILT

ALL WORK SHALL BE DONE IN ACCORDANCE WITH THE CITY OF SEATTLE STANDARD PLANS AND SPECIFICATIONS AND OTHER DOCUMENTS CALLED FOR IN SECTION 0-02.3 OF THE PROJECT MANUAL.

ADRIAN F. GALLARDO
STATE OF WASHINGTON
41232
REGISTERED PROFESSIONAL ENGINEER

City of Seattle
Seattle Department of Transportation
ORDINANCE NO. . . . . APPROVED . . . . . .
FUND: . . . . . .
SCALE: H. 1"=20', V. 1"=10' INSPECTOR'S BOOK . . . . . .

RAINIER AVENUE PEDESTRIAN ENHANCEMENTS

JOB NO.	
PC	TS6464A
R/W	----
CO	TS6464C

VAULT PLAN NO. 790-255

SHEET 5 OF 26

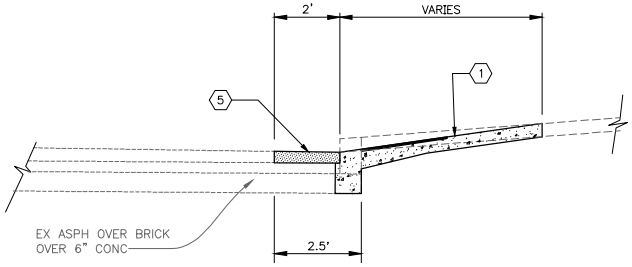

CROSS SECTION
FISHER WEST CURB RAMP RESTORATION
(SECTION A–A)
NTS

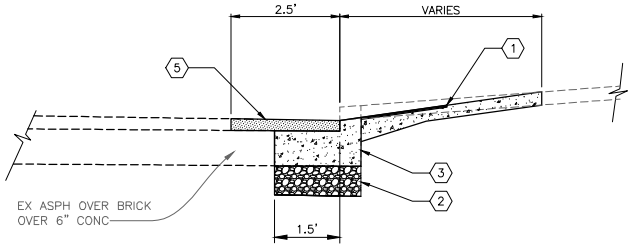

CROSS SECTION
FISHER EAST CURB RAMP RESTORATION
(SECTION C–C)
NTS

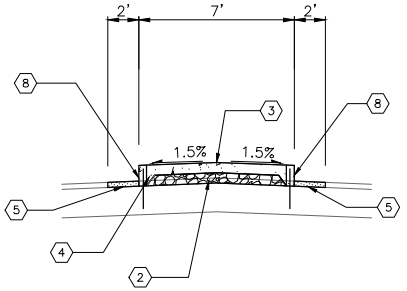

CROSS SECTION
FISHER LOOKING EAST
(ROAD MEDIAN)
NTS

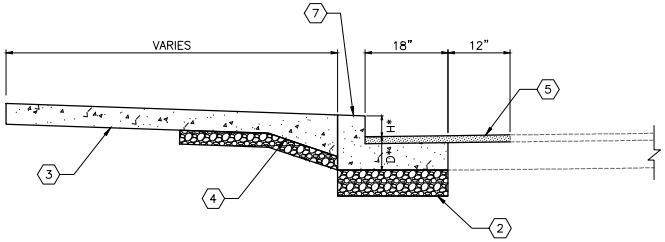

H* = PER PLAN OR MATCH EXISTING
D* = 9" OR MATCH EXISTING CONC ROADWAY DEPTH, WHICHEVER IS GREATER

CROSS SECTION
FISHER NEW/REPLACED CURB
(SECTION B–B)
NTS

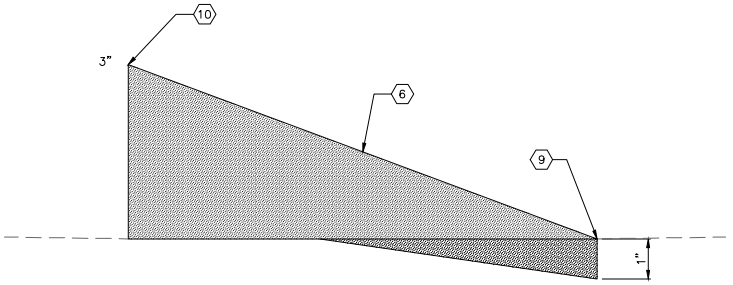

CROSS SECTION
ASPHALT WEDGE DETAIL
(SECTION D–D)
NTS

CROSS SECTION NOTES:

1. CURB RAMP PER STD PLAN 422A OR 422C
2. BACKFILL WITH MNRL AGGREGATE TYPE 2
3. CEM CONC SIDEWALK PER STD PLAN 420
4. SIDEWALK THICKENED EDGE
5. HMA CLASS ½", 2" DEPTH
6. HMA CLASS ½", VARIABLE DEPTH
7. CEM CONC CURB AND GUTTER PER STD PLAN 410B
8. CEM CONC CURB PER STD PLAN 410
9. MATCH EX GROUND
10. MATCH PROPOSED CURB

RS1
ROADWAY SECTIONS

VAULT SERIAL NO.	DATE	MARK	NATURE REVISIONS	MADE	CHK'D	REV'D
36469						

P:\STDrafter\TS6405A Rainier Ave Enhancements\A_PLOT FILES\TS6405A_P_RS00.dwg
Jun-10-15 3:36pm

90% REVIEW
NOT FOR CONSTRUCTION
JUNE 2015

APPROVED FOR ADVERTISING
NANCY LOCKE
DEPARTMENT OF FINANCE & ADMINISTRATIVE SERVICES
SEATTLE, WASHINGTON . . . . . 20 . .
BY: . . . . . .
PURCHASING & CONTRACTING SERVICES DIRECTOR

NAME OR INITIALS AND DATE
DESIGNED ----
CHECKED ----
DRAWN ----
CHECKED . . . . . .

INITIALS AND DATE
REVIEWED:
DES. . . . . CONST. . . . .
SDOT . . . . . PROJ. MGR. . . . .
RECEIVED . . . . . .
REVISED AS BUILT . . . . . .

ALL WORK SHALL BE DONE IN ACCORDANCE WITH THE CITY OF SEATTLE STANDARD PLANS AND SPECIFICATIONS AND OTHER DOCUMENTS CALLED FOR IN SECTION 0-02.3 OF THE PROJECT MANUAL.

ALBERT F. GALLARDO
STATE OF WASHINGTON
41232
REGISTERED PROFESSIONAL ENGINEER

City of Seattle
Seattle Department of Transportation
ORDINANCE NO. . . . . APPROVED. . . . . .
FUND: . . . . . .
SCALE: H. 1"=20', V. 1"=10' INSPECTOR'S BOOK . . . . . .

RAINIER AVENUE PEDESTRIAN ENHANCEMENTS

JOB NO. PC TS6464A
R/W ----
CO TS6464C
VAULT PLAN NO. 790–255
SHEET 6 OF 26

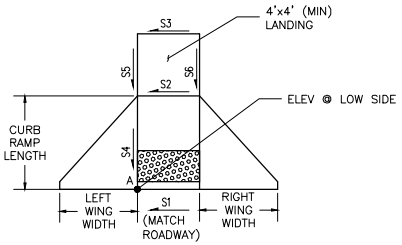

ELEVATION TABLE

#	EX. ELEVATION	PROP. ELEVATION
1	46.13'	46.13'
2	46.16'	46.10'
3	46.14'	46.06'
4	46.37'	46.31'
5	46.75'	46.75'
6	46.68'	46.64'
7	46.69'	46.64'
8	46.87'	46.82'
9	46.97'	46.97'
10	46.57'	46.57'
11	45.91'	45.91'

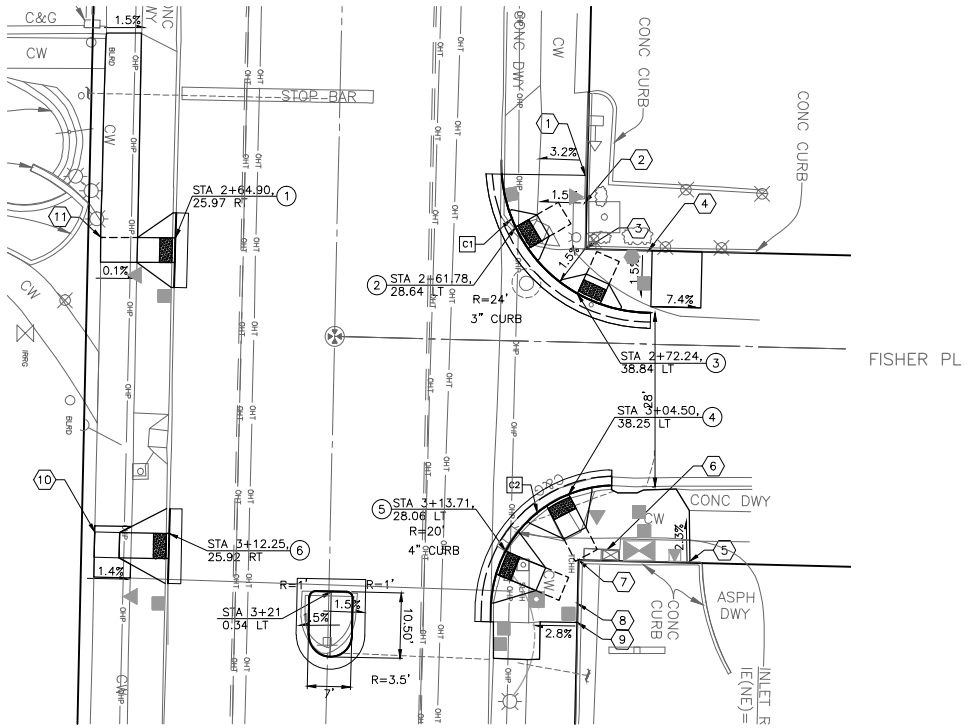

CURB RETURN TABLE

#	PC STA	PT STA	R	L	Δ	PC FL ELEV	½ R FL ELEV	PT FL ELEV
C1	2+53.21, 26.12' LT	2+75.04, 50.71' LT	24'	36.2	88.02	45.46	45.66	46.03
C2	3+02.95, 45.67' LT	3+22.19, 26.03' LT	20'	31.14'	89.20	45.91	46.13	46.22

CURB RAMP TABLE

RAMP	LEFT WING WIDTH (MIN)	CURB RAMP LENGTH (MIN)	RIGHT WING WIDTH (MIN)	A ELEV	LOW SIDE LEFT/RIGHT	S1 %	S2 %	S3 %	S4 %	S5 %	S6 %
1	4.0	6.0	4.0	45.49	RIGHT	1.0%	2.0%	1.5%	7.1%	0.1%	0.5%
2	2.9	4.0	2.4	45.60	LEFT	1.5%	1.5%	1.5%	7.5%	1.5%	1.5%
3	3.4	3.5	3.5	45.85	LEFT	1.5%	1.5%	1.5%	7.5%	1.5%	1.5%
4	3.7	6.0	3.7	46.10	LEFT	1.0%	1.0%	1.0%	7.5%	1.5%	1.5%
5	3.3	7.0	N/A	46.06	LEFT	0.8%	0.8%	0.8%	7.5%	1.5%	1.5%
6	4.0	8.0	4.0	45.97	RIGHT	1.0%	1.0%	1.0%	7.3%	1.5%	1.0%

CR1
CURB RAMP PLAN
S FISHER PL

VAULT SERIAL NO.	DATE	MARK	NATURE REVISIONS	MADE BY/CK'D	REV'D
364439					

90% REVIEW
NOT FOR CONSTRUCTION
JUNE 2015

APPROVED FOR ADVERTISING
NANCY LOCKE
DEPARTMENT OF FINANCE & ADMINISTRATIVE SERVICES
SEATTLE, WASHINGTON . . . . . 20 . .
BY: PURCHASING & CONTRACTING SERVICES DIRECTOR

NAME OR INITIALS AND DATE	INITIALS AND DATE
DESIGNED -----	REVIEWED:
CHECKED -----	DES. CONST.
DRAWN -----	SDOT PROJ. MGR.
CHECKED	RECEIVED
	REVISED AS BUILT

ALL WORK SHALL BE DONE IN ACCORDANCE WITH THE CITY OF SEATTLE STANDARD PLANS AND SPECIFICATIONS AND OTHER DOCUMENTS CALLED FOR IN SECTION 0-02.3 OF THE PROJECT MANUAL.

City of Seattle
Seattle Department of Transportation
ORDINANCE NO. . . . . APPROVED. . . . . .
FUND: . . . . . .
SCALE: H. 1"=20', V. 1"=10' INSPECTOR'S BOOK . . . . .

RAINIER AVENUE PEDESTRIAN ENHANCEMENTS

JOB NO.	
PC	TS6464A
R/W	-----
CO	TS6464C
VAULT PLAN NO.	790-255
SHEET	7 OF 26

C:\Autodesk\Support\temp\Acad-Publish_8388\TS6405A_P_CR00.dwg
Jun-09-15 11:54am

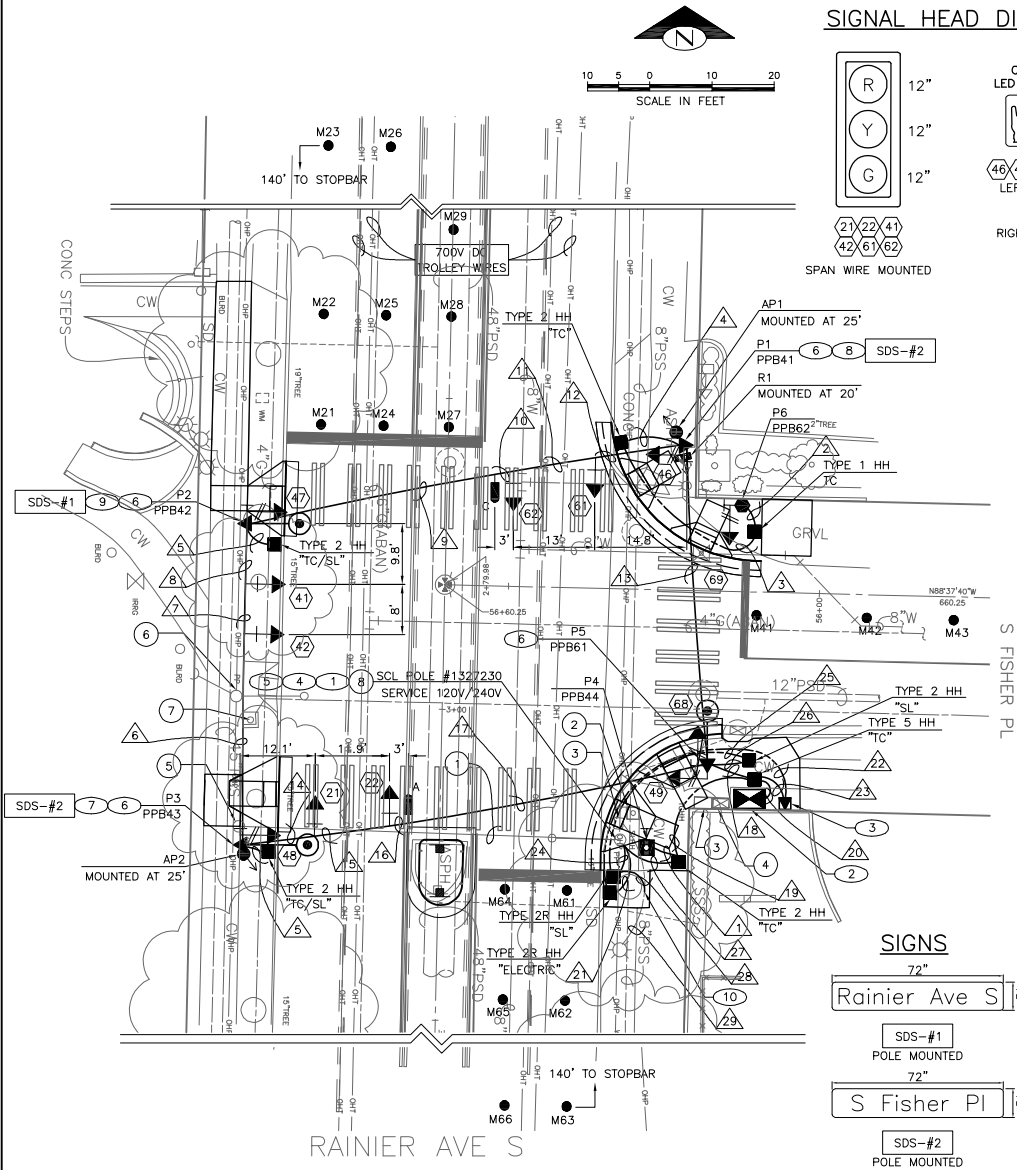

SIGNAL HEAD DISPLAY

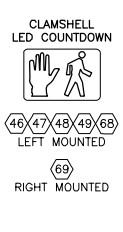

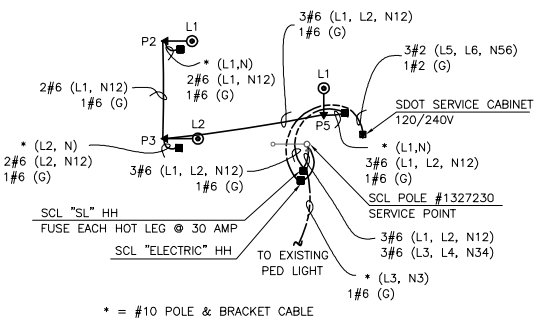

* = #10 POLE & BRACKET CABLE
OR #12, 20-10 CABLE

CIRCUIT DIAGRAM

EXISTING PHASE DIAGRAM

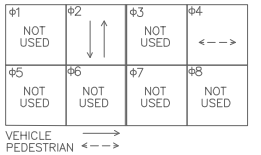

PROPOSED PHASE DIAGRAM

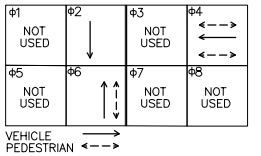

REMOVAL NOTES

1. SPAN WIRE AND VEHICLE SIGNAL HEADS WITH ALL ASSOCIATED WIRING.
2. PEDESTAL, FOUNDATION, SIGN(S) AND ALL ATTACHED SIGNAL EQUIPMENT WITH ASSOCIATED CONDUIT/WIRING.
3. HANDHOLE WITH ASSOCIATED CONDUIT(S).
4. TRAFFIC SIGNAL CABINET AND FOUNDATION WITH ASSOCIATED CONDUIT(S)/WIRING.
5. WOOD POLE, CONDUIT RISER AND CONDUIT TO EXISTING PEDESTAL.
6. ROADWAY LUMINAIRE AND BRACKET ARM WITH ASSOCIATED WIRING TO SPLICE POINT.
7. PEDESTAL, FOUNDATION, AND ALL ATTACHED SIGNAL EQUIPMENT WITH ASSOCIATED CONDUIT/WIRING.
8. CONDUIT RISER(S) AND CONDUIT(S) TO EXISTING HANDHOLE.

INSTALLATION NOTES

1. SERVICE POINT. COORDINATE WITH SCL ELECTRICAL SERVICE REPRESENTATIVE (SOUTH) FOR SERVICE CONNECTION.
2. OWNER FURNISHED TYPE III TRAFFIC SIGNAL CABINET (STA. 56+10.4, LT 33.6') ON CONTRACTOR CONSTRUCTED FOUNDATION. DOOR SHALL FACE NORTH.
3. SERVICE CABINET (STA. 56+4.7, LT 33.9') AND FOUNDATION. SDOT DOOR SHALL FACE WEST.
4. 2-3" CONDUIT RISER(S) FOR SERVICE AND 1-2" CONDUIT RISER FOR COMMUNICATION.
5. PULL BACK EXISTING INTERCONNECT FROM EXISTING TRAFFIC SIGNAL CABINET TO POLE AND PULL TO NEW TRAFFIC SIGNAL CABINET.
6. POLE MOUNTED TERMINAL CABINET.
7. POLE MOUNTED STREET DESIGNATION SIGN "S Fisher Pl" FACING SOUTH.
8. POLE MOUNTED STREET DESIGNATION SIGN "S Fisher Pl" FACING NORTH.
9. POLE MOUNTED STREET DESIGNATION SIGN "Rainier Ave S" FACING WEST.
10. INTERCEPT EXISTING CONDUIT FROM EXISTING PED LIGHT POLE WITH NEW CONDUIT AND ROUTE TO NEW HANDHOLE FOR SERVICE CONNECTION.

GENERAL NOTES

1. ALL STREETLIGHT SYSTEM GROUNDING AND BONDING SHALL CONFORM TO SCL CONSTRUCTION STANDARD 1710.50.
2. TAG AND IDENTIFY STREETLIGHT CIRCUIT PER SCL CONSTRUCTION STANDARD 1714.10.
3. STREETLIGHT HANDHOLE CONNECTIONS SHALL CONFORM TO SCL CONSTRUCTION STANDARD 1714.30.
4. STREETLIGHT HANDHOLE AND CONDUIT SHALL CONFORM TO SCL CONSTRUCTION STANDARD 1716.07.
5. FUSE EACH LUMINAIRE PER SCL CONSTRUCTION STANDARD 1730.00.
6. SHARED STREETLIGHT AND TRAFFIC CONTROL HANDHOLES SHALL CONFORM TO SCL CONSTRUCTION STANDARD 1810.05.
7. THE CONTRACTOR SHALL INVESTIGATE FOR UNDERGROUND UTILITIES PRIOR TO ANY FOUNDATION EXCAVATION OR CONDUIT TRENCHING TO AVOID DAMAGE TO ANY UNDERGROUND UTILITIES (INCLUDING SIDE SEWERS). ANY CONFLICTS SHALL BE BROUGHT TO THE ATTENTION OF THE ENGINEER PRIOR TO ANY CONSTRUCTION WORK.
8. CONTRACTOR SHALL COORDINATE WITH SCL/SDOT/DPD INSPECTOR AT THE START OF CONSTRUCTION FOR INSPECTION REQUIREMENT AT VARIOUS STAGES OF CONSTRUCTION AS INSTRUCTED BY THE INSPECTOR AND PROVIDE ASSISTANCE AS NECESSARY.
9. CONTRACTOR SHALL PROVIDE AN AS-BUILT TO SCL ELECTRICAL INSPECTOR PRIOR TO REQUESTING FINAL SERVICE CONNECTION.
10. FINAL POLE AND CABINET LOCATIONS SHALL BE FIELD VERIFIED BY THE ENGINEER PRIOR TO EXCAVATION.

SIGNS

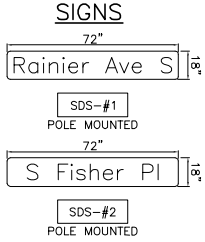

LEGEND

- EMERGENCY VEHICLE PRE-EMPT DETECTOR
- M## WIRELESS SENSOR
- AP# ACCESS POINT (SPP RADIO)
- R# REPEATER
- SERVICE CABINET

VAULT	SERIAL NO.	DATE	MARK	NATURE REVISIONS	MADE	CHK'D	REV'D
36469							

90% REVIEW
NOT FOR CONSTRUCTION
JUNE 2015

APPROVED FOR ADVERTISING
NANCY LOCKE
DEPARTMENT OF FINANCE & ADMINISTRATIVE SERVICES
SEATTLE, WASHINGTON . . . . . 20 . .
BY: . . . . . .
PURCHASING & CONTRACTING SERVICES DIRECTOR

NAME OR INITIALS AND DATE
DESIGNED
CHECKED
DRAWN
CHECKED

INITIALS AND DATE
REVIEWED:
DES. CONST.
SDOT PROJ. MGR.
RECEIVED
REVISED AS BUILT

ALL WORK SHALL BE DONE IN ACCORDANCE WITH THE CITY OF SEATTLE STANDARD PLANS AND SPECIFICATIONS AND OTHER DOCUMENTS CALLED FOR IN SECTION 0-02.3 OF THE PROJECT MANUAL.

STATE OF WASHINGTON 45813 REGISTERED PROFESSIONAL ENGINEER

City of Seattle
Seattle Department of Transportation
ORDINANCE NO. . . . . APPROVED. . . . . .
FUND: . . . . . .
SCALE: INSPECTOR'S BOOK . . . . . .

RAINIER AVENUE PEDESTRIAN ENHANCEMENTS

JOB NO. PC TS6464A R/W ----- CO TS6464C
VAULT PLAN NO. 790-255
SHEET 8 OF 26

SG1

SIGNAL AND LIGHTING PLAN
RAINIER AVE S & S FISHER PL

C:\Autodesk\Support\Temp\AcPublish_240\TS6405A_P_SG00.dwg
Jun-09-15 11:49am

WIRING SCHEDULE

# RUN NO.	SPAN WIRE OR CONDUIT SIZE	VEHICLE HEAD	PED HEAD	PPB'S	ACCESS POINT	PRE-EMPT	INTERCONNECT	SERVICE	GROUND	STREET LIGHT	NOTE
1	1-1" TRCD			1-1PR(SH)					1-#6		
2	1-2" TRCD		1-3C	1-1PR(SH)					1-#6		
3	1-2" TRCD		1-3C	1-1PR(SH)					1-#6		
	1-2" TRCD										SPARE
4	1-2" TRCD		1-3C	1-1PR(SH)					1-#6		
	2-2" TRCD										SPARE
5	2-2" TRCD										SPARE
	1-2" ECD								1-#6	2-#6	*2
6	SPAN WIRE								1-#6	2-#6	
7	SPAN WIRE	1-5C							1-#6	2-#6	
8	SPAN WIRE	2-5C							1-#6	2-#6	
9	SPAN WIRE	1-10C		1-1PR(SH)					1-#6		
10	SPAN WIRE	1-10C		1-1PR(SH)		1-M138			1-#6		
11	SPAN WIRE	1-5C, 1-10C		1-1PR(SH)		1-M138			1-#6		
12	SPAN WIRE	2-5C, 1-10C		1-1PR(SH)		1-M138			1-#6		
13	SPAN WIRE	1-3C, 2-10C		3-1PR(SH)	1-CAT5E	1-M138			1-#6		
14	SPAN WIRE	2-5C, 1-10C		1-1PR(SH)	1-CAT5E				1-#6	3-#6	
15	SPAN WIRE	1-5C, 1-10C		1-1PR(SH)	1-CAT5E				1-#6	3-#6	
16	SPAN WIRE	1-10C		1-1PR(SH)	1-CAT5E				1-#6	3-#6	
17	SPAN WIRE	1-10C		1-1PR(SH)	1-CAT5E	1-M138			1-#6	3-#6	
18	1-3" TRCD	1-3C, 1-5C, 3-10C							1-#6		
	1-3" TRCD			5-1PR(SH)	2-CAT5E	2-M138			1-#6		
19	1-3" TRCD			1-1PR(SH)			EXISTING		1-#6		
	2-2" TRCD										SPARE
20	1-3" TRCD	1-3C, 1-5C, 3-10C							1-#6		
	1-3" TRCD			6-1PR(SH)	2-CAT5E	2-M138	EXISTING		1-#6		
	1-3" TRCD										SPARE
	1-2" ECD							2-#6	1#6		
21	1-3" ECD CONDUIT RISER							3-#4/0			*1
22	1-2" ECD							3-#2	1-#2		
23	1-2" ECD							2-#6	1#6		
	2-2" ECD										SPARE
24	1-3" ECD CONDUIT RISER									6-#6	*1
25	1-2" ECD								1-#6	3-#6	
	1-2" ECD										SPARE
26	1-2" ECD								1#6	3-#6	*2
27	1-2" TRCD CONDUIT RISER						EXISTING				SPARE
28	1-2" ECD								1#6		*2
29	EX 1-2"								1#6		*2, *3

NOTES

*1	COORDINATE WITH SCL ELECTRICAL SERVICE REPRESENTATIVE FOR SERVICE REQUIREMENTS.
*2	ADD #10 POLE & BRACKET CABLE OR #12, 20-10 CABLE IN CONDUIT.
*3	REMOVE EXISTING CONDUCTORS IN CONDUIT.

(P) POLE/PEDESTAL SCHEDULE

POLE NO.	STATION/LOCATION AND OFFSET	POLE TYPE	FOUNDATION TYPE	POLE SHAFT LENGTH (FT)	LUMINAIRE ARM LENGTH (FT)	LUMINAIRE TYPE	LUMINAIRE MOUNTING HEIGHT (FT)	# OF CABLE OUTLETS	LOCATION OF OUTLET (CLOCKWISE) 0° = RAINIER AVE NORTHBOUND	CITY LIGHT POLE NO.	TERMINAL CABINET LOCATION (CLOCKWISE) 0° = RAINIER AVE NORTHBOUND	NOTE
P1	STA. 2+56.6, LT 38.0'	STEEL STRAIN TYPE V	STD PLAN NO. 541a/b (9'-6")	33.5	-	-	-	2	180 & 270	-	0	*1
P2	STA. 2+70.8, RT 32.0'	STEEL STRAIN TYPE V	STD PLAN NO. 541a/b (9'-6")	33.5	8	PRINCIPAL ARTERIAL LED	35	2	90 & 180	-	180	*2
P3	STA. 3+22.5, RT 31.6'	STEEL STRAIN TYPE V	STD PLAN NO. 541a/b (9'-6")	33.5	8	PRINCIPAL ARTERIAL LED	35	2	0 & 90	-	180	*2
P4	STA. 3+21.5, LT 33.3'	PPB POST	STD PLAN NO. 521	4.5	-	-	-	-	-	-	-	
P5	STA. 56+17.4, LT 27.8'	STEEL STRAIN TYPE V	STD PLAN NO. 541a/b (9'-6")	33.5	8	PRINCIPAL ARTERIAL LED	35	2	0 & 270	-	90	*2
P6	STA. 56+12.8, RT 13.9'	ALUMINUM PEDESTAL	STD PLAN NO. 524	10	-	-	-	-	-	-	-	

NOTE:

*1	INSTALL FLANGE PLATE ON POLE FOR FUTURE LUMINAIRE BRACKET ARM. CAP AND PLUG FLANGE PLATE HOLES.
*2	PRINCIPAL ARTERIAL LUMINAIRE SHALL CONFORM TO SEATTLE CITY LIGHT MATERIAL STANDARD NO. 5723.71.

SERVICE PANEL

LOCATION: RAINIER AVE S & S FISHER PL					120/240 V 1 PHASE 3 WIRE				
POWER SOURCE: SCL Pole #1327230					60 AMP MAIN BREAKER				
NO.	AMP.	POLES	KVA	CIRCUIT DESCRIPTION	NO.	AMP.	POLES	KVA	CIRCUIT DESCRIPTION
1	40	1	2.0	SIGNAL	2				
3	20	1	2.0	RTIS	4				
5					6				
7					8				
CONTINUOUS LOAD:					1.0 KVA		8.7 AMP.		
TOTAL LOAD:					4.0 KVA		33.7 AMP.		

WIRELESS SENSOR SCHEDULE

DEVICE NO.	EQUIPMENT	PHASE	BICYCLE DETECTOR PAVEMENT MARKING	MAC ID	MOUNTING
M21	MICRORADAR	2	X		IN-GROUND
M22	MAGNETOMETER	2			IN-GROUND
M23	MAGNETOMETER	2			IN-GROUND
M24	MICRORADAR	2			IN-GROUND
M25	MAGNETOMETER	2			IN-GROUND
M26	MAGNETOMETER	2			IN-GROUND
M27	MICRORADAR	2	X		IN-GROUND
M28	MAGNETOMETER	2			IN-GROUND
M29	MAGNETOMETER	2			IN-GROUND
M41	MICRORADAR	4	X		IN-GROUND
M42	MAGNETOMETER	4			IN-GROUND
M43	MAGNETOMETER	4			IN-GROUND
M61	MICRORADAR	6	X		IN-GROUND
M62	MAGNETOMETER	6			IN-GROUND
M63	MAGNETOMETER	6			IN-GROUND
M64	MICRORADAR	6			IN-GROUND
M65	MAGNETOMETER	6			IN-GROUND
M66	MAGNETOMETER	6			IN-GROUND
R1	REPEATER				POLE MOUNTED
AP1	SPP RADIO				POLE MOUNTED
AP2	SPP RADIO				POLE MOUNTED

(PPB) PUSHBUTTON MOUNTING SCHEDULE

PPB NO.	POLE NO.	LOCATION (CLOCKWISE) 0° = RAINIER AVE NORTHBOUND	PHASE	ARROW DIRECTION LOOKING AT PUSHBUTTON	RAPID TICK	CUSTOM MESSAGE
PPB41	P1	180	4	LEFT	X	
PPB42	P2	0	4	LEFT	X	
PPB43	P3	0	4	LEFT	X	
PPB44	P4	0	4	RIGHT	X	
PPB61	P5	270	6	LEFT	X	
PPB62	P6	270	6	RIGHT	X	
SEE STD PLAN NO. 622b FOR PEDESTRIAN PUSHBUTTON ASSEMBLY.						

PRE-EMPT SCHEDULE

DETECTOR ID	PHASE	MODEL NO.
A	2	721
C	6	721
OPTICOM DISCRIMINATOR		764 & 768

SG2
SIGNAL SCHEDULES
RAINIER AVE S & S FISHER PL

NO.	DATE	MARK	NATURE REVISIONS	MADE CHK'D	REV'D
VAULT SERIAL NO. 36469					

90% REVIEW
NOT FOR CONSTRUCTION
JUNE 2015

APPROVED FOR ADVERTISING
NANCY LOCKE
DEPARTMENT OF FINANCE & ADMINISTRATIVE SERVICES
SEATTLE, WASHINGTON . . . . . 20 . . .
BY: . . . . . PURCHASING & CONTRACTING SERVICES DIRECTOR

NAME OR INITIALS AND DATE
DESIGNED ----
CHECKED ----
DRAWN ----
CHECKED

INITIALS AND DATE
REVIEWED:
DES. . . . . CONST.
SDOT . . . . . PROJ. MGR.
RECEIVED ----
REVISED AS BUILT ----

ALL WORK SHALL BE DONE IN ACCORDANCE WITH THE CITY OF SEATTLE STANDARD PLANS AND SPECIFICATIONS AND OTHER DOCUMENTS CALLED FOR IN SECTION 0-02.3 OF THE PROJECT MANUAL.

NOLAN CHAN — STATE OF WASHINGTON — 45813 — REGISTERED PROFESSIONAL ENGINEER

City of Seattle
Seattle Department of Transportation
ORDINANCE NO. . . . . APPROVED. . . . . .
FUND: . . . . . .
SCALE: INSPECTOR'S BOOK . . . . . .

RAINIER AVENUE PEDESTRIAN ENHANCEMENTS

JOB NO.		
	PC	TS6464A
	R/W	----
	CO	TS6464C
VAULT PLAN NO.	790-255	
SHEET	9 OF 26	

C:\Autodesk\Support\Temp\AcPublish_240\TS6405A_P_S500.dwg
Jun-09-15 11:49am

FIELD TERMINATION DIAGRAM

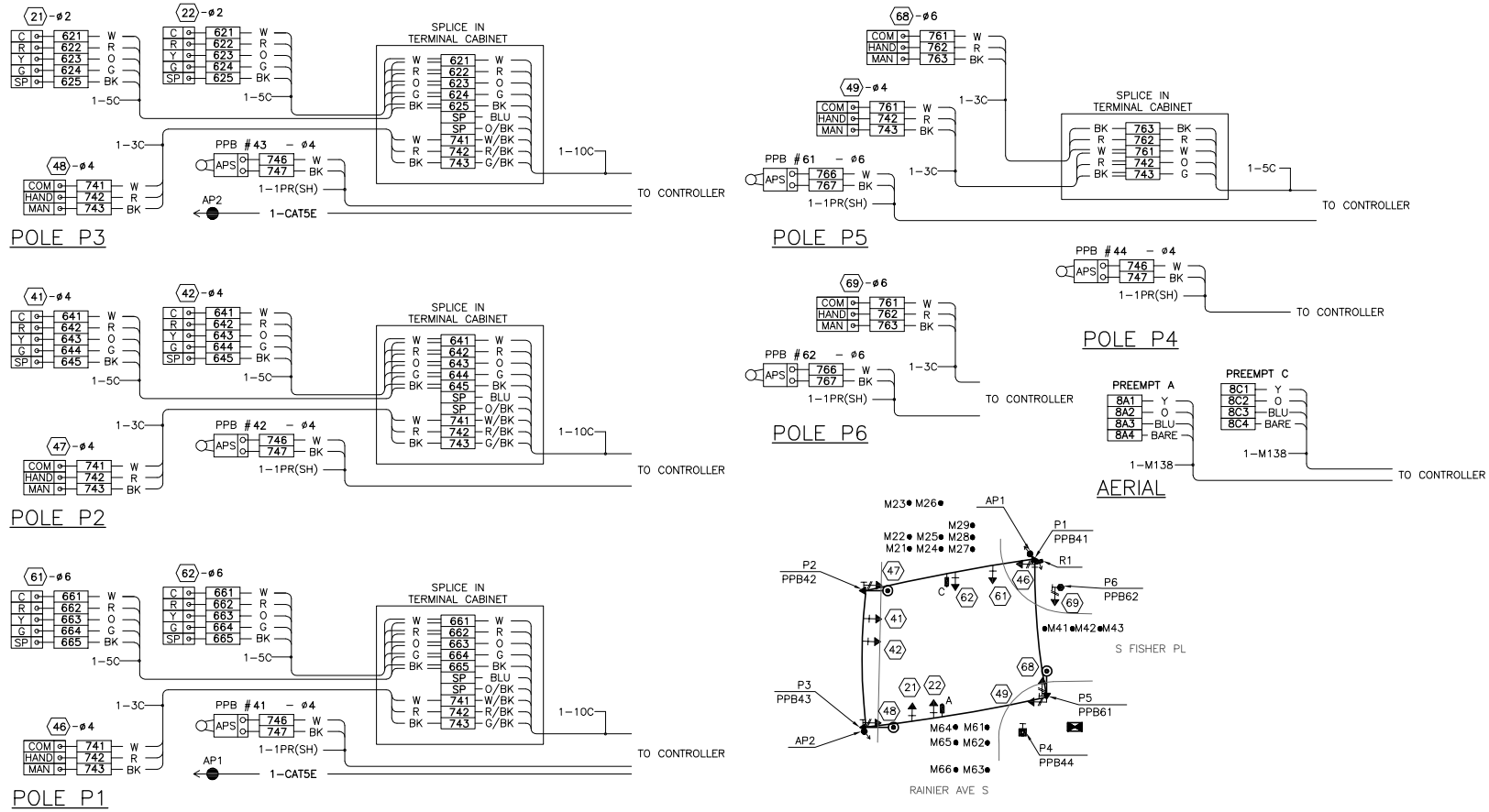

SG3
SIGNAL TERMINATIONS
RAINIER AVE S & S FISHER PL

90% REVIEW
NOT FOR CONSTRUCTION
JUNE 2015

APPROVED FOR ADVERTISING
NANCY LOCKE
DEPARTMENT OF FINANCE & ADMINISTRATIVE SERVICES
SEATTLE, WASHINGTON . . . . . 20 . .
BY: PURCHASING & CONTRACTING SERVICES DIRECTOR

NAME OR INITIALS AND DATE
DESIGNED ----
CHECKED ----
DRAWN ----
CHECKED

INITIALS AND DATE
REVIEWED:
DES. . . . . CONST. . . . .
SDOT . . . . . PROJ. MGR. . . . .
RECEIVED ----
REVISED AS BUILT ----

ALL WORK SHALL BE DONE IN ACCORDANCE WITH THE CITY OF SEATTLE STANDARD PLANS AND SPECIFICATIONS AND OTHER DOCUMENTS CALLED FOR IN SECTION 0-02.3 OF THE PROJECT MANUAL.

City of Seattle
Seattle Department of Transportation
ORDINANCE NO. . . . . APPROVED. . . . . .
FUND: . . . . . .
SCALE: INSPECTOR'S BOOK. . . . . .

RAINIER AVENUE PEDESTRIAN ENHANCEMENTS

JOB NO.
PC TS6464A
R/W ----
CO TS6464C
VAULT PLAN NO. 790–255
SHEET 10 OF 26

VAULT SERIAL NO. 36469 | DATE | MARK | NATURE REVISIONS | MADE | CHK'D | REV'D

C:\Autodesk\Support\Temp\AcPublish_240\TS6405A_P_SG00.dwg
Jun-09-15 11:49am

CABINET TERMINATION DIAGRAM

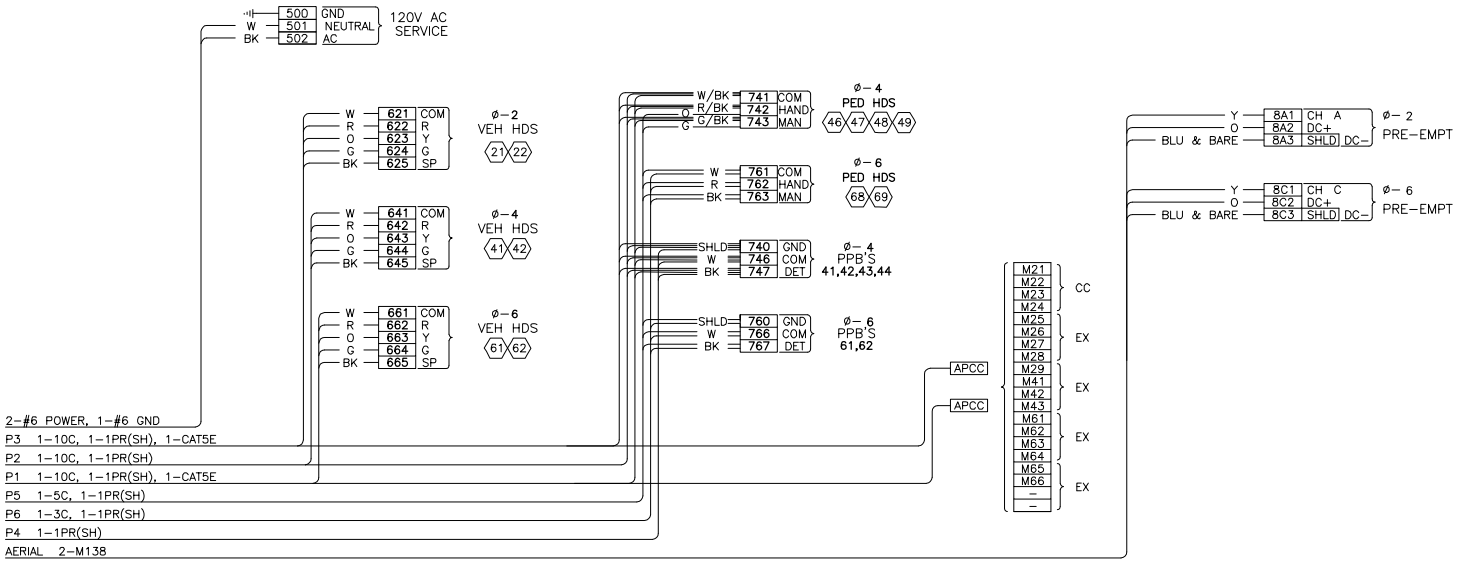

VAULT SERIAL NO.	DATE	MARK	NATURE REVISIONS	MADE	CHK'D	REV'D
36469						

SG4
SIGNAL TERMINATIONS
RAINIER AVE S & S FISHER PL

90% REVIEW
NOT FOR CONSTRUCTION
JUNE 2015

APPROVED FOR ADVERTISING
NANCY LOCKE
DEPARTMENT OF FINANCE & ADMINISTRATIVE SERVICES
SEATTLE, WASHINGTON . . . . . 20 . .
BY: . . . . . PURCHASING & CONTRACTING SERVICES DIRECTOR

NAME OR INITIALS AND DATE
DESIGNED ----
CHECKED ----
DRAWN ----
CHECKED

INITIALS AND DATE
REVIEWED:
DES. . . . . CONST.
SDOT . . . . . PROJ. MGR.
RECEIVED ----
REVISED AS BUILT ----

ALL WORK SHALL BE DONE IN ACCORDANCE WITH THE CITY OF SEATTLE STANDARD PLANS AND SPECIFICATIONS AND OTHER DOCUMENTS CALLED FOR IN SECTION 0-02.3 OF THE PROJECT MANUAL.

TOM M. CHAN — STATE OF WASHINGTON — 45813 — REGISTERED PROFESSIONAL ENGINEER

City of Seattle
Seattle Department of Transportation
ORDINANCE NO. . . . . APPROVED. . . . . .
FUND: . . . . . .
SCALE: INSPECTOR'S BOOK . . . . . .

RAINIER AVENUE PEDESTRIAN ENHANCEMENTS

JOB NO. PC TS6464A R/W ---- CO TS6464C
VAULT PLAN NO. 790−255
SHEET 11 OF 26

C:\Autodesk\Support\Temp\AcPublish_240\TS6405A_P_SG00.dwg
Jun-09-15 11:49am

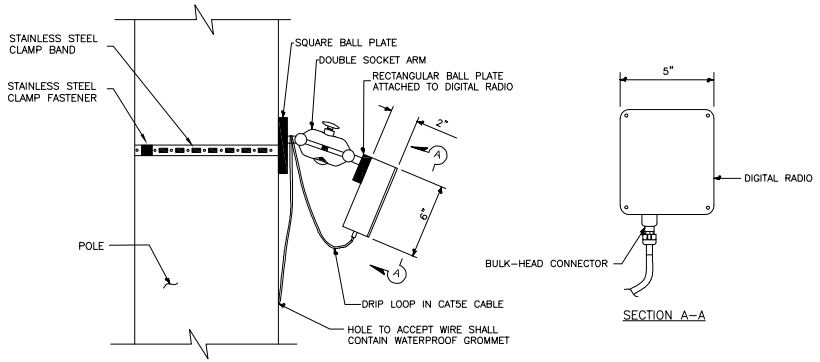

ACCESS POINT (SPP RADIO) MOUNTING DETAIL

NOT TO SCALE

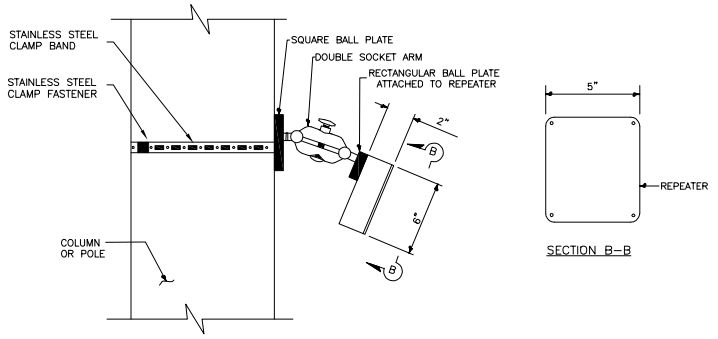

REPEATER MOUNTING DETAIL

NOT TO SCALE

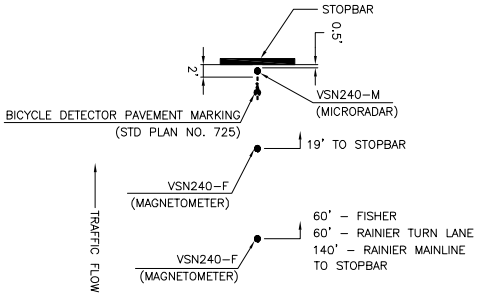

WIRELESS SENSOR LAYOUT

NOT TO SCALE

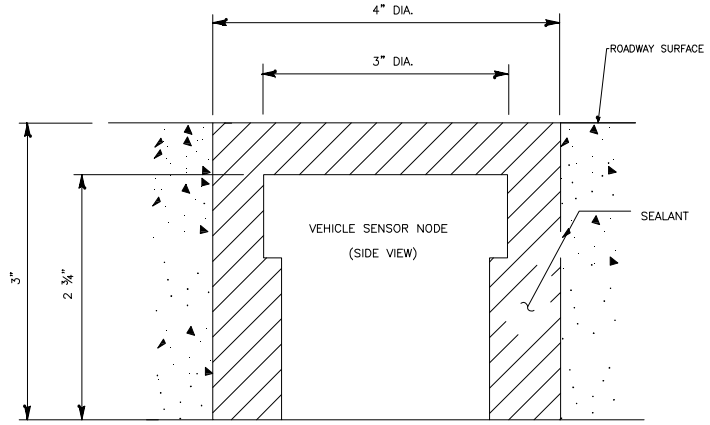

WIRELESS VEHICLE SENSOR NODE INSTALLATION DETAIL

NOT TO SCALE

SG5
SIGNAL DETAILS
RAINIER AVE S & S FISHER PL

VAULT SERIAL NO.	DATE	MARK	NATURE REVISIONS	MADE CHK'D	REV'D
36469					

90% REVIEW
NOT FOR CONSTRUCTION
JUNE 2015

APPROVED FOR ADVERTISING
NANCY LOCKE
DEPARTMENT OF FINANCE & ADMINISTRATIVE SERVICES
SEATTLE, WASHINGTON . . . . . 20 . .
BY: . . . . . PURCHASING & CONTRACTING SERVICES DIRECTOR

NAME OR INITIALS AND DATE
DESIGNED ----
CHECKED ----
DRAWN ----
CHECKED ----

INITIALS AND DATE
REVIEWED:
DES. . . . . CONST.
SDOT . . . . . PROJ. MGR.
RECEIVED ----
REVISED AS BUILT ----

ALL WORK SHALL BE DONE IN ACCORDANCE WITH THE CITY OF SEATTLE STANDARD PLANS AND SPECIFICATIONS AND OTHER DOCUMENTS CALLED FOR IN SECTION 0-02.3 OF THE PROJECT MANUAL.

JON M. CHAN — STATE OF WASHINGTON — 45813 — REGISTERED PROFESSIONAL ENGINEER

City of Seattle
Seattle Department of Transportation
ORDINANCE NO. . . . . APPROVED. . . . . .
FUND: . . . . . .
SCALE: INSPECTOR'S BOOK . . . . . .

RAINIER AVENUE PEDESTRIAN ENHANCEMENTS

JOB NO.		
	PC	TS6464A
	R/W	----
	CO	TS6464C
VAULT PLAN NO.		790-255
SHEET		12 OF 26

C:\Autodesk\Support\Temp\AcPublish_240\TS6405A_P_SG05.dwg
Jun-09-15 11:49am

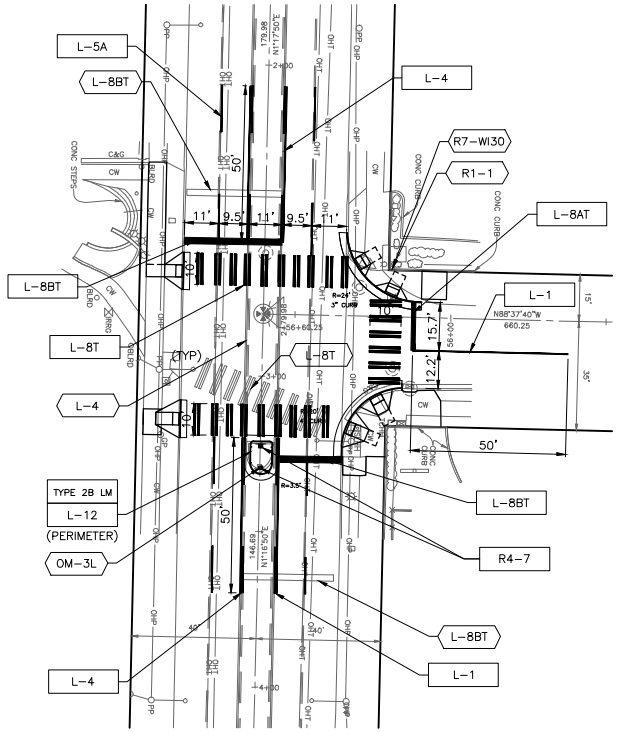

CHANNELIZATION LEGEND

L-1	SOLID 4" YELLOW STRIPE DOUBLE CENTERLINE, MMA
L-2	SOLID 4" YELLOW STRIPE MEDIAN LINE, MMA
L-3	DASHED 4" YELLOW STRIPE CENTERLINE, MMA
L-4	SOLID 4" YELLOW STRIPE TWO-WAY LEFT TURN LINE, MMA
L-5A	DASHED 4" WHITE STRIPE LANE LINE, MMA
L-8T	SOLID 8" WHITE CROSSWALK, THERMOPLASTIC
L-8AT	16" WHITE STRIP STOP BAR, THERMOPLASTIC
L-8BT	SOLID 24" STOP BAR, THERMOPLASTIC
L-12	6" YELLOW CURB STRIPE

INSTALL

REMOVE

SIGNING LEGEND

R1-1	STOP SIGN
R4-7	KEEP RIGHT
R7-WI30	NO PARKING WITHIN 30 FEET
OM-3L	OBJECT MARKER

N

20 10 0 20 40

SCALE IN FEET

CH1

CHANNELIZATION PLAN

S FISHER PL

VAULT SERIAL NO.	DATE	MARK	NATURE REVISIONS	MADE CHK'D	REV'D
364439					

P:\STDrafter\TS6405A Rainier Ave Enhancements\A_PLOT FILES\TS6405A_P_CH00.dwg
Jun-10-15 10:55am

90% REVIEW
NOT FOR CONSTRUCTION
JUNE 2015

APPROVED FOR ADVERTISING
NANCY LOCKE
DEPARTMENT OF FINANCE & ADMINISTRATIVE SERVICES
SEATTLE, WASHINGTON . . . . . 20 . .

BY: PURCHASING & CONTRACTING SERVICES DIRECTOR

NAME OR INITIALS AND DATE
DESIGNED -----
CHECKED -----
DRAWN -----
CHECKED

INITIALS AND DATE
REVIEWED:
DES. CONST.
SDOT PROJ. MGR.
RECEIVED
REVISED AS BUILT

ALL WORK SHALL BE DONE IN ACCORDANCE WITH THE CITY OF SEATTLE STANDARD PLANS AND SPECIFICATIONS AND OTHER DOCUMENTS CALLED FOR IN SECTION 0-02.3 OF THE PROJECT MANUAL.

City of Seattle
Seattle Department of Transportation

ORDINANCE NO. . . . . APPROVED. . . . . .
FUND: . . . . . .
SCALE: H. 1"=20', V. 1"=10' INSPECTOR'S BOOK . . . . . .

RAINIER AVENUE PEDESTRIAN ENHANCEMENTS

JOB NO. PC	TS6464A
R/W	-----
CO	TS6464C
VAULT PLAN NO.	790-255
SHEET	13 OF 26