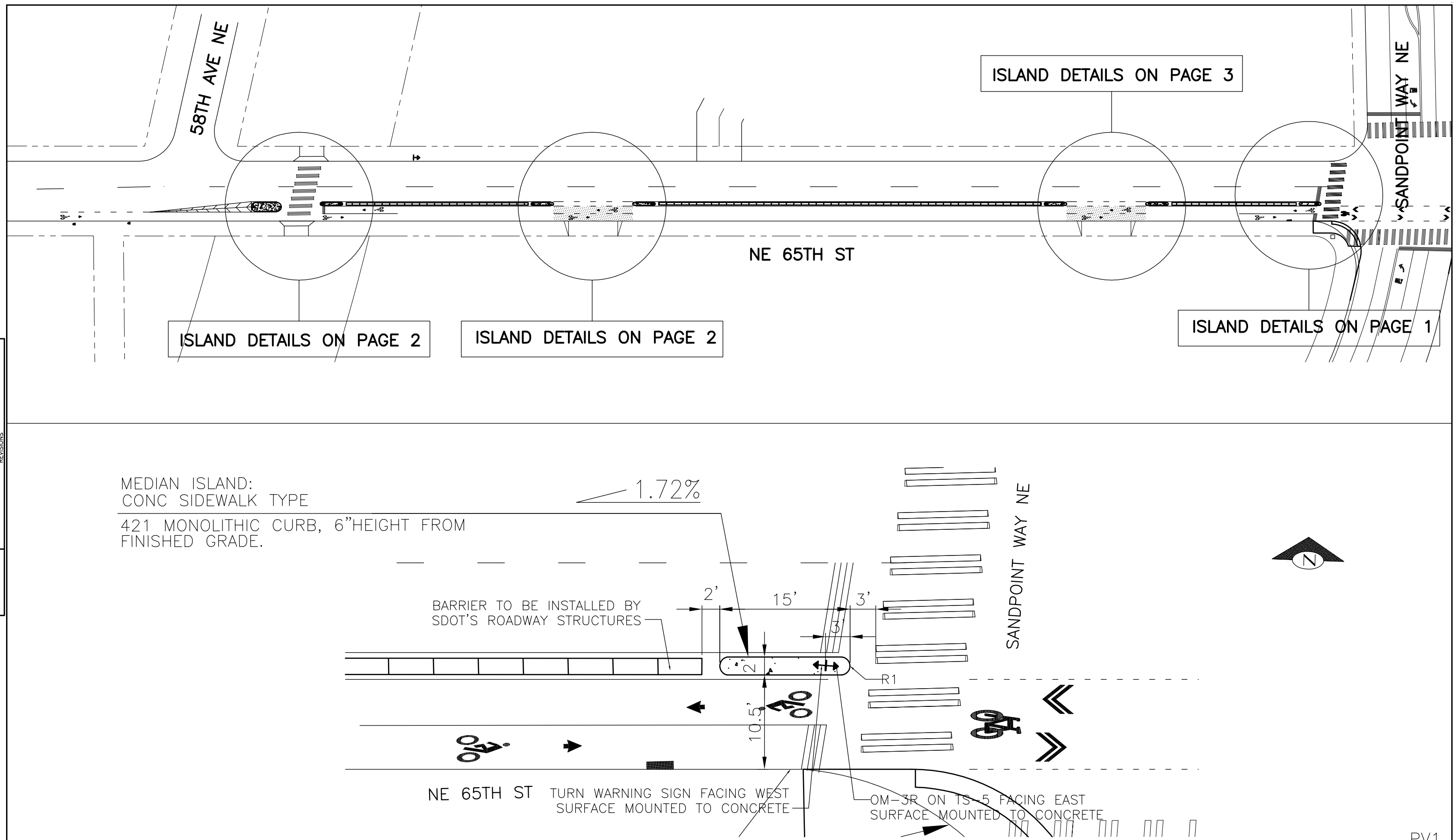

PV1

NE 65TH ST – PAVING PLAN

VAULT SERIAL NO.	DATE	MARK	NATURE REVISIONS	MADE	CHK'D	REV'D

APPROVED FOR ADVERTISING
XXXXXXX XXXXXX
PURCHASING AND CONTRACTING SERVICES DIVISION
SEATTLE, WASHINGTON . . . . . 20 . .

BY: . . . . . .
PURCHASING AND CONTRACTING SERVICES DIRECTOR

NAME OR INITIALS AND DATE	INITIALS AND DATE
DESIGNED	REVIEWED:
CHECKED	PE . . . . . CONST. . . . .
	PROJ. MGR. . . . .
DRAWN	RECEIVED . . . . .
CHECKED	REVISED AS BUILT . . . . .

ALL WORK DONE IN ACCORDANCE WITH THE CITY OF SEATTLE STANDARD PLANS AND SPECIFI-CATIONS AND OTHER DOCUMENTS CALLED FOR IN SECTION 0-02.3 OF THE PROJECT MANUAL.

City of Seattle
Seattle Department of Transportation

ORDINANCE NO. . . . . APPROVED. . . . . .
FUND: . . . . . .
INSPECTOR'S BOOK . . . . . .

2012 SBMP
NE 65TH ST

JOB NO.
PC XXXXXXX
R/W
CO XXXXXXX

VAULT PLAN NO.
XXXXXX

SHEET 1 OF 5

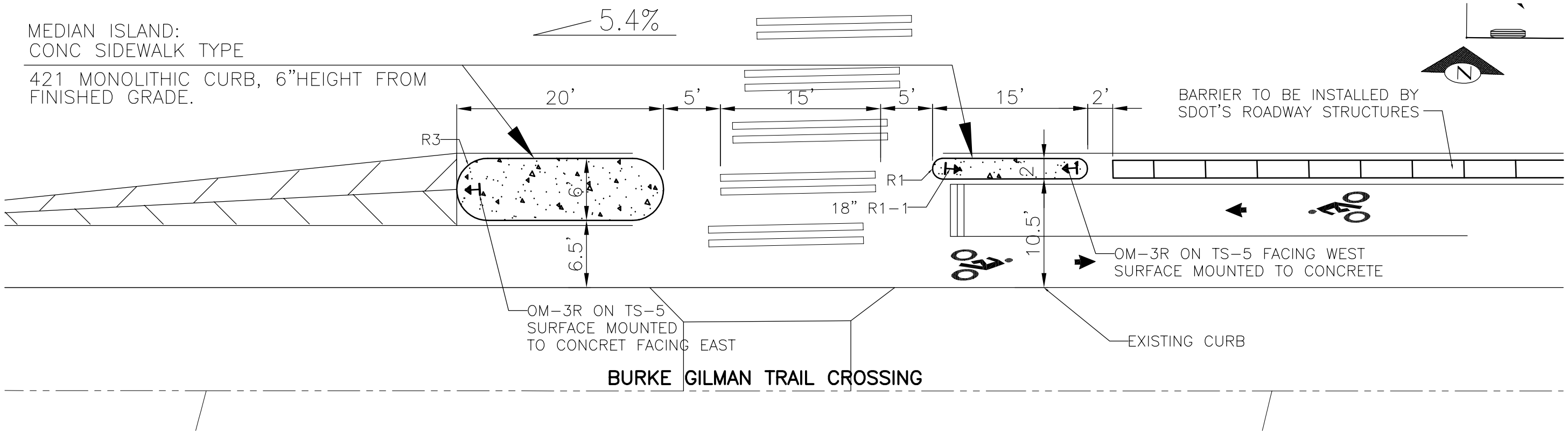

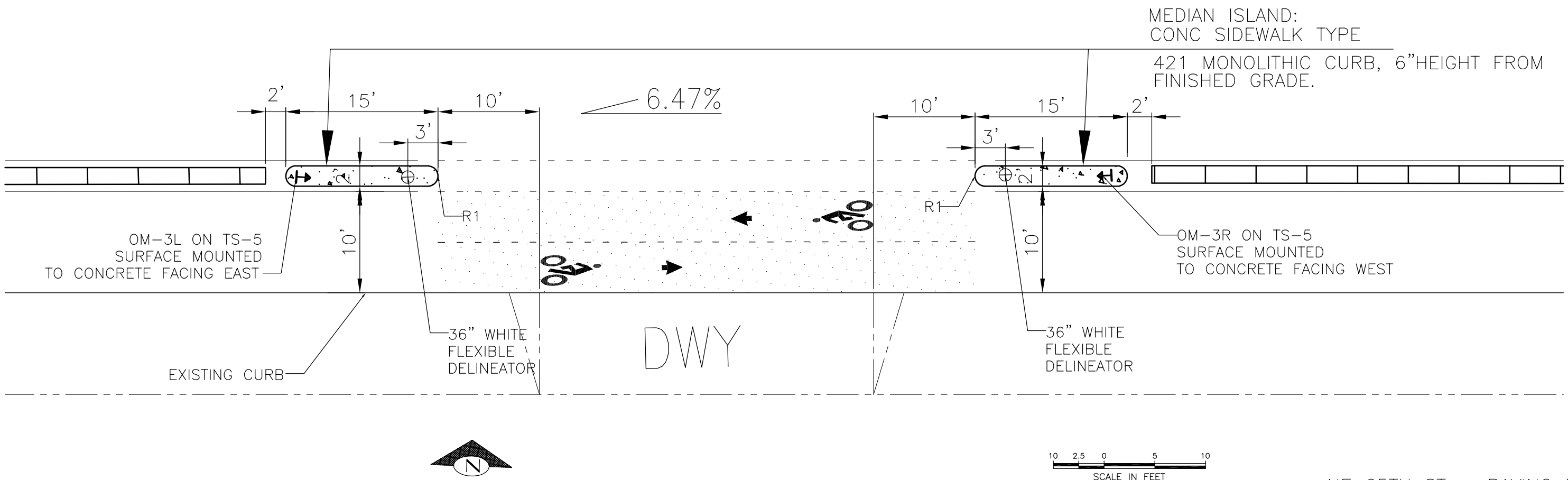

PV2
NE 65TH ST – PAVING PLAN

VAULT SERIAL NO.	DATE	MARK	NATURE REVISIONS	MADE	CHK'D	REV'D

APPROVED FOR ADVERTISING
XXXXXXX XXXXXX
PURCHASING AND CONTRACTING SERVICES DIVISION
SEATTLE, WASHINGTON . . . . . 20 . .
BY: . . . . . .
PURCHASING AND CONTRACTING SERVICES DIVISION

NAME OR INITIALS AND DATE	INITIALS AND DATE
DESIGNED	REVIEWED:
CHECKED	PE . . . . . CONST. . . . .
	PROJ. MGR. . . . .
DRAWN	RECEIVED . . . . .
CHECKED	REVISED AS BUILT . . . . .

ALL WORK DONE IN ACCORDANCE WITH THE CITY OF SEATTLE STANDARD PLANS AND SPECIFICATIONS AND OTHER DOCUMENTS CALLED FOR IN SECTION 0-02.3 OF THE PROJECT MANUAL.

City of Seattle
Seattle Department of Transportation
ORDINANCE NO. . . . . APPROVED. . . . . .
FUND: . . . . . .
INSPECTOR'S BOOK . . . . . .

2012 SBMP
NE 65TH ST

JOB NO.
PC XXXXXXX
R/W
CO XXXXXXX

VAULT PLAN NO.
XXXXXX

SHEET 2 OF 5

MEDIAN ISLAND:
CONC SIDEWALK TYPE

421 MONOLITHIC CURB, 6"HEIGHT FROM FINISHED GRADE.

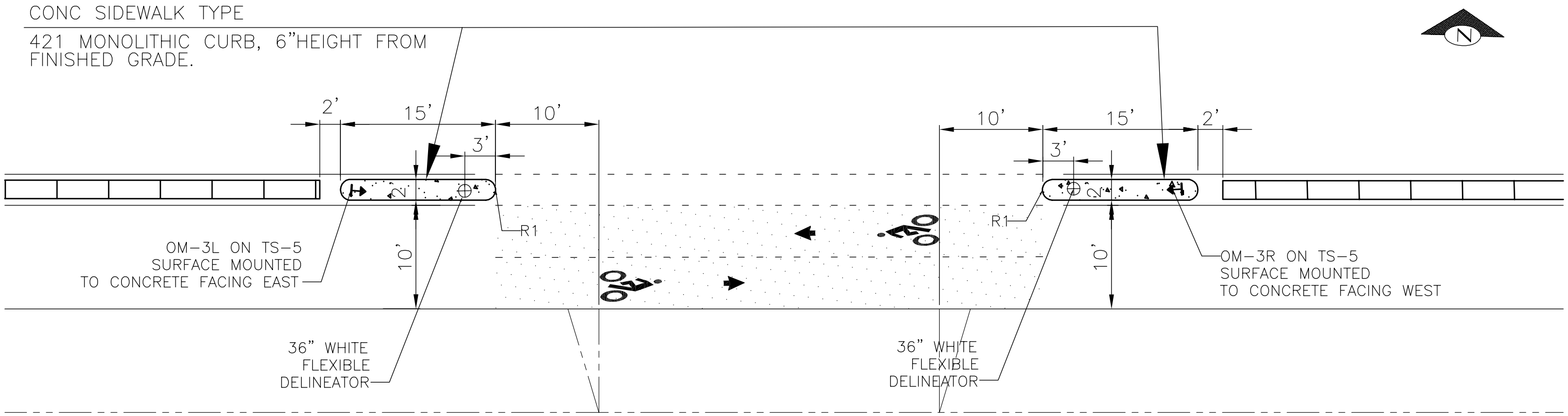

VAULT SERIAL NO.	DATE	MARK	NATURE REVISIONS	MADE	CHK'D	REV'D

10 2.5 0 5 10
SCALE IN FEET

PV3
NE 65TH ST – PAVING PLAN

APPROVED FOR ADVERTISING
XXXXXXX XXXXXX
PURCHASING AND CONTRACTING SERVICES DIVISION
SEATTLE, WASHINGTON . . . . . 20 . . .

BY: . . . . . .
PURCHASING AND CONTRACTING SERVICES DIRECTOR

NAME OR INITIALS AND DATE	INITIALS AND DATE
DESIGNED	REVIEWED:
CHECKED	PE . . . . . CONST. . . . .
	PROJ. MGR. . . . .
DRAWN	RECEIVED . . . . .
CHECKED	REVISED AS BUILT . . . . .

ALL WORK DONE IN ACCORDANCE WITH THE CITY OF SEATTLE STANDARD PLANS AND SPECIFI-CATIONS AND OTHER DOCUMENTS CALLED FOR IN SECTION 0-02.3 OF THE PROJECT MANUAL.

City of Seattle
Seattle Department of Transportation

ORDINANCE NO. . . . . APPROVED. . . . . .
FUND: . . . . . .
INSPECTOR'S BOOK . . . . . .

2012 SBMP
NE 65TH ST

JOB NO.
PC XXXXXXX
R/W
CO XXXXXXX

VAULT PLAN NO.
XXXXXX

SHEET 3 OF 5

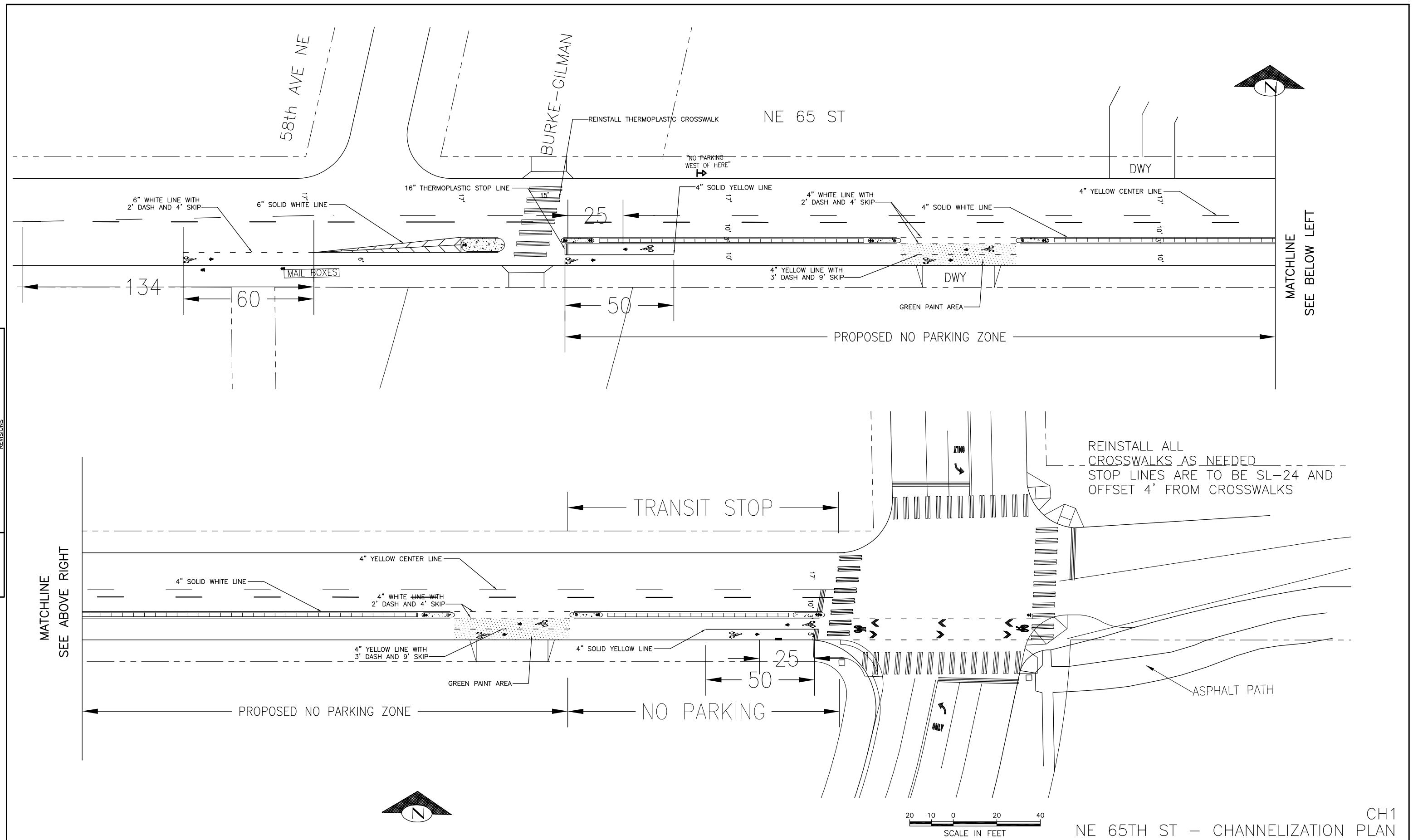

CH1

NE 65TH ST – CHANNELIZATION PLAN

VAULT SERIAL NO.	DATE	MARK	NATURE REVISIONS	MADE	CHK'D	REV'D

APPROVED FOR ADVERTISING
XXXXXXX XXXXXX
PURCHASING AND CONTRACTING SERVICES DIVISION
SEATTLE, WASHINGTON . . . . . 20 . .

BY: . . . . . .
PURCHASING AND CONTRACTING SERVICES DIRECTOR

NAME OR INITIALS AND DATE	INITIALS AND DATE
DESIGNED	REVIEWED:
CHECKED	PE . . . . . CONST. . . . .
	PROJ. MGR. . . . .
DRAWN	RECEIVED . . . . .
CHECKED	REVISED AS BUILT . . . . .

ALL WORK DONE IN ACCORDANCE WITH THE CITY OF SEATTLE STANDARD PLANS AND SPECIFICATIONS AND OTHER DOCUMENTS CALLED FOR IN SECTION 0-02.3 OF THE PROJECT MANUAL.

City of Seattle
Seattle Department of Transportation

ORDINANCE NO. . . . . APPROVED. . . . . .
FUND: . . . . . .
INSPECTOR'S BOOK . . . . . .

2012 SBMP
NE 65TH ST

JOB NO. PC XXXXXXX R/W CO XXXXXXX

VAULT PLAN NO. XXXXXX

SHEET 4 OF 5

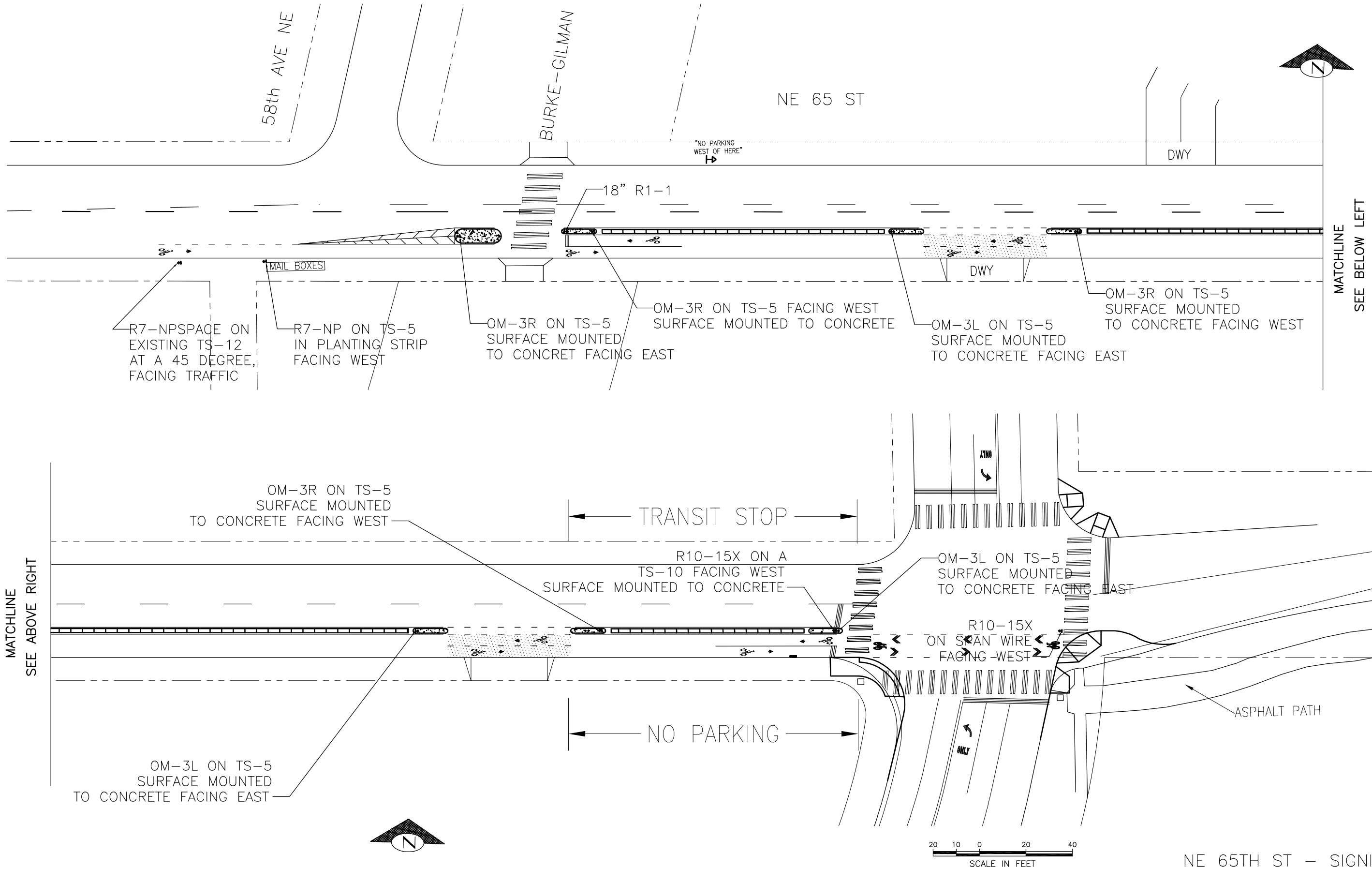

SG1
NE 65TH ST – SIGNING PLAN

VAULT SERIAL NO.	DATE	MARK	NATURE REVISIONS	MADE	CHK'D	REV'D

APPROVED FOR ADVERTISING
XXXXXXX XXXXXX
PURCHASING AND CONTRACTING SERVICES DIVISION
SEATTLE, WASHINGTON . . . . . 20 . .
BY: . . . . . .
PURCHASING AND CONTRACTING SERVICES DIRECTOR

NAME OR INITIALS AND DATE
DESIGNED . . . . . .
CHECKED . . . . . .
DRAWN . . . . . .
CHECKED . . . . . .

INITIALS AND DATE
REVIEWED:
PE . . . . . CONST. . . . . .
PROJ. MGR. . . . . .
RECEIVED . . . . . .
REVISED AS BUILT . . . . . .

ALL WORK DONE IN ACCORDANCE WITH THE CITY OF SEATTLE STANDARD PLANS AND SPECIFICATIONS AND OTHER DOCUMENTS CALLED FOR IN SECTION 0-02.3 OF THE PROJECT MANUAL.

City of Seattle
Seattle Department of Transportation
ORDINANCE NO. . . . . APPROVED. . . . . .
FUND: . . . . . .
INSPECTOR'S BOOK . . . . . .

2012 SBMP
NE 65TH ST

JOB NO.
PC XXXXXXX
R/W
CO XXXXXXX

VAULT PLAN NO.
XXXXXX

SHEET 5 OF 5