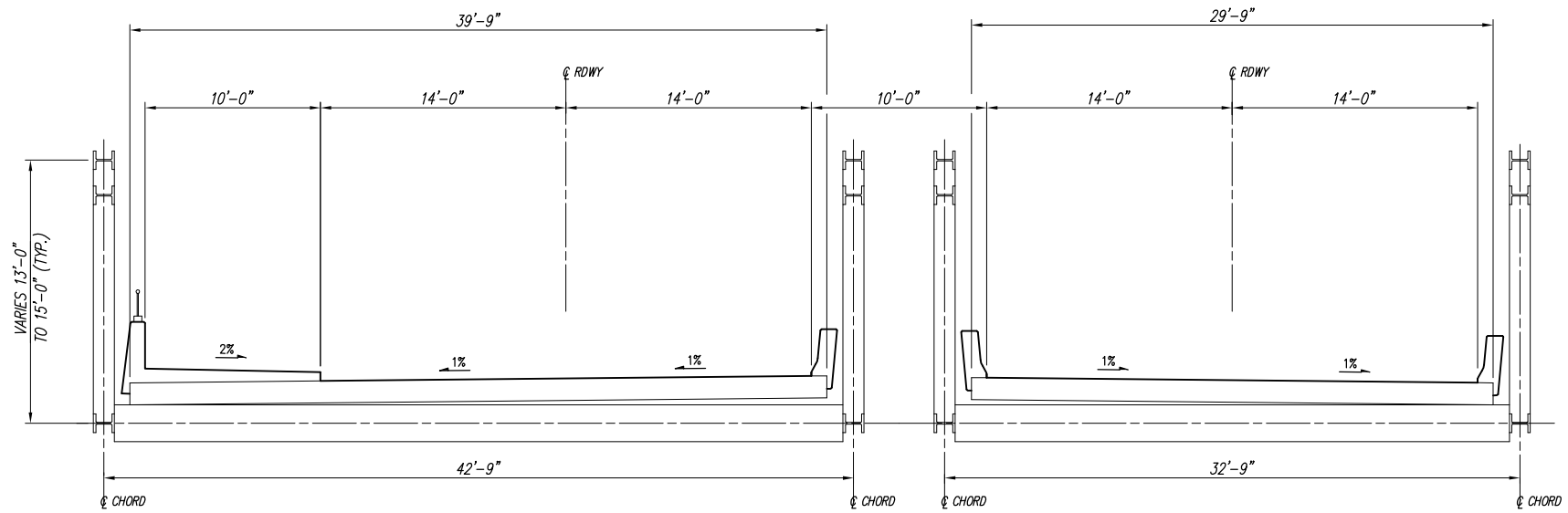

TYPICAL ROADWAY SECTION

SCALE: 1"=5'

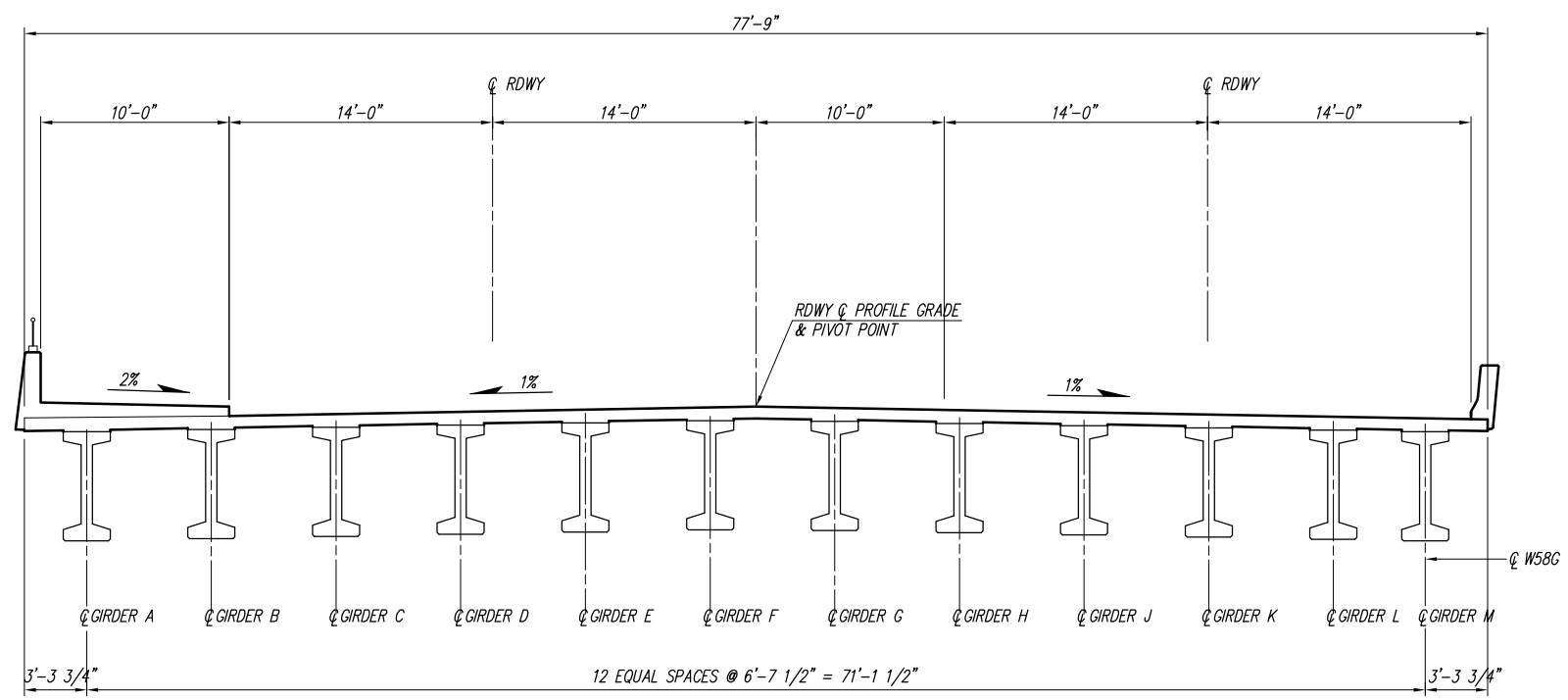

TYPICAL ROADWAY SECTION

SCALE: 1"=5'

kpff Consulting Engineers
1601 Fifth Avenue, Suite 1600
Seattle, Washington 98101-3665
(206) 622-5822 Fax (206) 622-8130

TYPICAL SECTIONS
OPTION 1B