GENERAL NOTES:

1. DRAWINGS TB-4179 THRU TB-4200 ARE PART OF POLE SPECIFICATION 3538.
2. DESIGNATION (X) ON DRAWINGS TB-4179 THRU TB-4187 REFERS TO ITEMS DETAILED ON DRAWINGS TB-4188 THRU TB-4200.
3. SYMBOL △ NOTED ON DRAWINGS REFERS TO CONTROL POINTS FOR THE ATTACHED ITEMS.
4. A "0 REFERENCE ANGLE" INDICATOR SHALL BE PERMANENTLY PLACED ON TOP OF THE BASE PLATES AND ON TOP OF ANCHOR BOLT RING PLATES TO FACILITATE INSTALLATION OF FOUNDATION AND POLE. SEE THE TECHNICAL SPECIFICATIONS.
5. PICK UP POINTS OF THE POLES SHALL BE IDENTIFIED ON THE MANUFACTURER'S DRAWINGS.
6. THE STRUCTURES SHALL BE DESIGNED IN ACCORDANCE WITH THE CURRENT EDITION OF THE NATIONAL ELECTRICAL SAFETY CODE (NESC), THE AISC MANUAL NO. 72 ON "DESIGN OF STEEL TRANSMISSION POLE STRUCTURES" AND THIS POLE SPECIFICATION.
7. POLE EMBEDMENT LENGTH = 0.0 FEET FOR DESIGN OF POLES.
8. DESIGN LOADS SHOWN ON SPECIFICATION DRAWINGS INCLUDE NESC LOAD FACTORS.

8a. BROKEN CONDUCTOR COMBINATIONS SHALL INCLUDE THE FOLLOWING COMBINATIONS:

1. ONE BROKEN SHIELD OR OPGW, ALL OTHER INTACT
2. BROKEN SHIELD AND BROKEN OPGW, ALL OTHER INTACT
3. BROKEN OPGW AND TOP 230KV PHASE ON SAME SIDE AS OPGW, ALL OTHER INTACT
4. BROKEN OPGW AND TOP 230KV PHASE ON OPPOSITE SIDE, ALL OTHER INTACT
5. TOP TWO 230KV PHASES ON SAME SIDE, ALL OTHER INTACT
6. TOP 230KV PHASES ON OPPOSITE SIDES, ALL OTHER INTACT

SEE LOAD TREES FOR FORCE MAGNITUDES.

9. TRANSVERSE AND LONGITUDINAL LOADS INCLUDE LINE DEFLECTION ANGLE COMPONENT.
10. WIND ON STRUCTURE LOAD, Wp, IN THE POSITIVE AND NEGATIVE TRANSVERSE DIRECTION, SHALL BE ON THE PROJECTED AREA OF A CIRCULAR POLE WITH DRAG COEFFICIENT =1.0.
11. DEAD LOAD – THE STRUCTURE DEAD WEIGHT SHALL BE INCLUDED SIMULTANEOUSLY WITH ALL OTHER LOADS IN THE STRUCTURE DESIGN. THIS VERTICAL LOAD SHALL BE MULTIPLIED BY THE FOLLOWING FACTORS:

LOADING CASE	LF (LOAD FACTOR)
NESC MEDIUM LOAD	1.5
EXTREME WIND AND EXTREME ICE W/WIND	1.25

12. VERTICAL LOADS INCLUDE WEIGHT OF INSULATORS.

GENERAL NOTES (CONT.):

13. GROUNDING LUG ON EACH POLE, ITEM 12 SEE TB-4200.
14. FAA BEACON MOUNT BRACKET SHALL BE PROVIDED ON EACH POLE, SEE TB-4194.
15. CONDUCTORS

A. **FIBER OPTIC CABLE**
OPGW, BARE DIA. = 0.913", BARE WT. = 0.916 LB/FT. MAXIMUM TENSION: NESC MEDIUM LOAD = 9,000 LBS (14,850 W/LF). ALCOA CHART NO. 1-917.

B. **SHIELD WIRE**
20M ALUMOWELD, BARE DIA. = 0.444", BARE WT. = 0.347 LB/FT. MAXIMUM WORKING TENSION: NESC MEDIUM LOAD = 6,000 LBS (9,900 LBS W/LF)

C. **230KV TRANSMISSION CONDUCTOR (NORTH POLE)**
ACSR 795 MCM "MALLARD", BARE DIA. = 1.14", BARE WT. = 1.235 LB/FT. MAXIMUM TENSION: NESC MEDIUM LOAD = 9,000 LBS (14,850 W/LF).

D. **230KV TRANSMISSION CONDUCTOR (SOUTH POLE)**
ACSR 795 MCM "MALLARD", BARE DIA. = 1.14", BARE WT. = 1.235 LB/FT. MAXIMUM TENSION: NESC MEDIUM LOAD = 9,000 LBS (14,850 W/LF).

E. **26KV PRIMARY CONDUCTOR**
ACSR 954 MCM "RAIL", BARE DIA. = 1.165", BARE WT. = 1.075 LB/FT. MAXIMUM TENSION: NESC MEDIUM LOAD = 8,000 LBS. (13,200 W/LF)

F. **NEUTRAL CONDUCTOR**
ACSR 397.5 MCM "IBIS", BARE DIA. = 0.783", BARE WT. = 0.5469 LB/FT. MAXIMUM TENSION: NESC MEDIUM LOAD = 4,000 LBS. (6,600 W/LF)

16. AN IDENTIFICATION PLATE WITH THE FOLLOWING INFORMATION SHALL BE WELDED TO THE POLE AT APPROX. 5' ABOVE BASE PLATE ON THE 0° REFERENCE LINE.

- MANUFACTURE NAME
- JOB #
- DATE
- SCL POLE #
- HEIGHT
- WEIGHT
- DESIGN GROUND LINE MOMENT.

REFERENCES:

SPECIFICATION 3538.

ONE INCH
AT FULL SIZE

REVISIONS

REV	DATE	MF
DR	CK	APP
W.O. #		
0	04/26/11	
VWD	W.O. # 1827201	

DESCRIPTION

IRVING SEITOKU OGI
STATE OF WASHINGTON
23207
STRUCTURAL ENGINEER
PROFESSIONAL ENGINEER
10-14-11

Seattle City Light

SIGNATURE		DATE
DR	: V. DONG	04/26/2011
CK	:	
DSGN	:	10/14/11
CK	:	
APP	:	10/14/11

OVERHEAD TRANSMISSION
SOUTH TRANSMISSION
DUWAMISH TO CRESTON
230KV - 26KV STEEL POLES
GENERAL NOTES

SHEET 1 OF 23
CLASS **S-1**
DRAWING NO. **TB-4178**
SCALE **AS NOTED**
REV. NO. **0**

I:\OU_293\WHH\NORMAN\DUWA TO CRESTON\TB-4178.dwg
dongv Oct/14/2011 7:48am

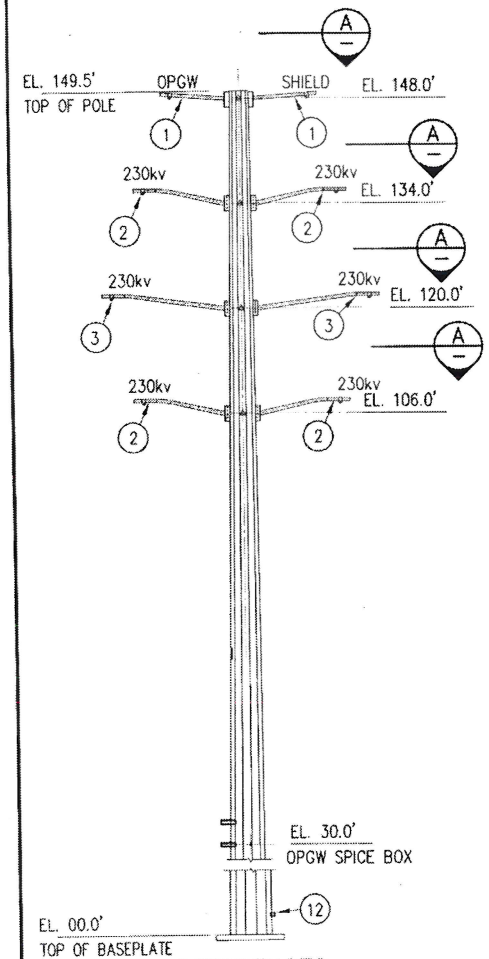

REFERENCES:

N.T.S.

6. FOR LADDER BRACKET SEE TB-4196.
7. FOR SAFETY CABLE BRACKET SEE TB-4197.
8. FOR ATTACHMENTS NEAR POLE TOP SEE TB-4194
9. FOR BROKEN CONDUCTOR LOAD CASE SEE TB-4178, NOTE 8a.

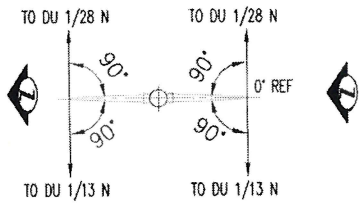

PLAN A

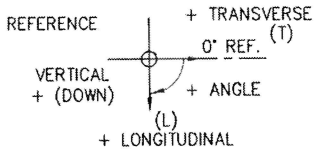

LOADING REFERENCE

OPGW LOAD: @ ELV. 148.0'

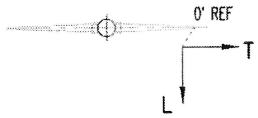

SHIELD LOAD: @ ELV. 148.0'

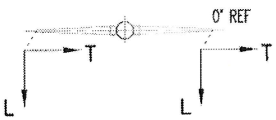

230kv LOAD: @ ELV. 134.0', 120.0' @ 106.0'

LOADING PLANS

NOTES

1. FOR GENERAL NOTES, SEE TB-4178.
2. ITEM DESIGNATED (X) ARE SHOWN ON TB-4188 TO TB-4200.
3. DEFLECTION CRITERIA: MAX. DEFLECTION AT TOP OF POLE <1% OF POLE LENGTH FOR NESC MEDIUM UNFACTORED LOAD CASE.
4. NO POLE CAMBER ALLOWED.
5. FOR JACKING NUTS, SEE TB-4200.

POLE DU 1/24 N TANGENT STRUCTURE (DOUBLE DEADEND) (1 REQ'D)			LOAD CASE (LOADS INCLUDE LOAD FACTORS, LBS) 1 NESC MEDIUM	2 NESC EX-WIND	3 NESC EXT ICE & WIND	4 BROKEN (SEE NOTE 9)	5 NESC MEDIUM UNFAC
OPGW EL. 148.00'	TRANSVERSE	(T)	-672	-887	-103		-238
	LONGITUDINAL	(L)	1015	905	321	216	615
	VERTICAL	(V)	1215	555	815	545	810
OPGW EL. 148.00' BROKEN	TRANSVERSE	(T)	–	–	–	0	–
	LONGITUDINAL	(L)	–	–	–	12041	–
	VERTICAL	(V)	–	–	–	360	–
SHIELD EL. 148.00'	TRANSVERSE	(T)	-407	-381	-94	-86	-163
	LONGITUDINAL	(L)	0	0	110	306	0
	VERTICAL	(V)	549	266	377	263	366
SHIELD EL. 148.00' BROKEN	TRANSVERSE	(T)	–	–	–	-41	–
	LONGITUDINAL	(L)	–	–	–	9218	–
	VERTICAL	(V)	–	–	–	147	–
MALLARD 230KV EL. 134.00', 120.00, 106.00'	TRANSVERSE	(T)	-1239	-1417	-372	-453	-551
	LONGITUDINAL	(L)	-70	350	-331	-441	-40
	VERTICAL	(V)	3112	1742	2073	1731	2074
MALLARD 230KV BROKEN EL. 134.00', 120.00	TRANSVERSE	(T)	–	–	–	-76	–
	LONGITUDINAL	(L)	–	–	–	12159	–
	VERTICAL	(V)	–	–	–	701	–
RAIL S 26KV EL. 90.00'	TRANSVERSE	(T)	-1465	-1207	-616	-708	-774
	LONGITUDINAL	(L)	-8615	-4635	-4971	-3525	-5214
	VERTICAL	(V)	1522	822	1012	715	1014
RAIL N 26KV EL. 80.00'	TRANSVERSE	(T)	-2554	-1202	-1340	-864	-1462
	LONGITUDINAL	(L)	-8844	-5671	-4904	-4179	-5355
	VERTICAL	(V)	1358	563	935	501	905
NEUTRAL EL. 70.00'	TRANSVERSE	(T)	-3014	-1333	-1690	-1613	-1766
	LONGITUDINAL	(L)	-2775	-2239	-1149	-1058	-1677
	VERTICAL	(V)	891	381	664	361	595
WIND ON POLE	Wp	(PSF)	10.00	18.50	2.30	4.00	4.00

ONE INCH AT FULL SIZE

REVISIONS

REV	DATE	DESCRIPTION
0	04/26/11	

DR CK APP MF
W.O. #
VWD W.O. # 1827201

IRVING SEITOKU OGI — STATE OF WASHINGTON — 23207 — STRUCTURAL ENGINEER — PROFESSIONAL ENGINEER — 10-14-11

Seattle City Light

SIGNATURE		DATE
DR :	V. DONG	04/26/2011
CK :		
DSGN :		10/14/11
CK :		
APP :		10/14/11

OVERHEAD TRANSMISSION
SOUTH TRANSMISSION
DUWAMISH TO CRESTON
230KV-26 KV POLE # DU 1/24 N
DESIGN LOADING

SHEET 2 OF 23

CLASS S-2

DRAWING NO. TB-4179

SCALE AS NOTED

REV. NO. 0

E:\DU_293\VINH\NORMAN\DUWM TO CRESTON\TB-4179.dwg
dongv Oct/14/2011 6:28am

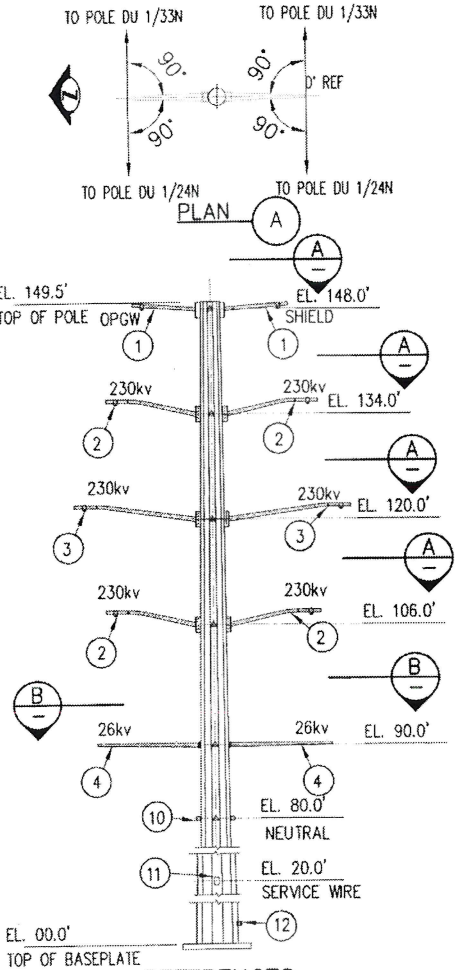

REFERENCES:

N.T.S.

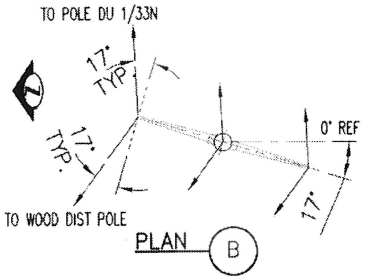

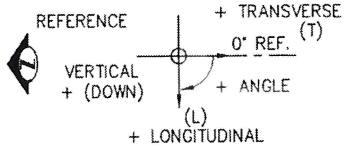

LOADING REFERENCE

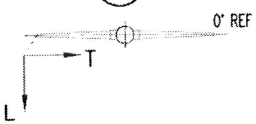

OPGW LOAD: @ ELV. 148.0'

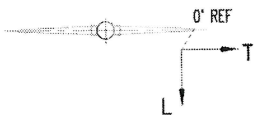

SHIELD LOAD: @ ELV. 148.0'

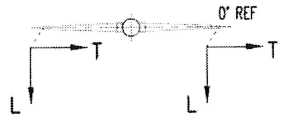

230kv LOAD: @ ELV. 134.0', 120.0' @ 106.0'

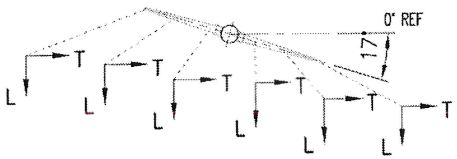

26kv LOAD: @ ELV. 90.0'

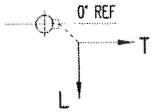

NEUTRAL LOAD: @ ELV. 80.0'

LOADING PLANS

NOTES

1. FOR GENERAL NOTES, SEE TB-4178.
2. ITEM DESIGNATED (X) ARE SHOWN ON TB-4188 TO TB-4200.
3. DEFLECTION CRITERIA: MAX. DEFLECTION AT TOP OF POLE <1% OF POLE LENGTH FOR NESC MEDIUM UNFACTORED LOAD CASE.
4. NO POLE CAMBER ALLOWED.
5. FOR JACKING NUTS, SEE TB-4200.
6. FOR LADDER BRACKET SEE TB-4196.
7. FOR SAFETY CABLE BRACKET SEE TB-4197.
8. FOR ATTACHMENTS NEAR POLE TOP SEE TB-4194
9. FOR BROKEN CONDUCTOR LOAD CASE SEE TB-4178, NOTE 8a.
10. FOR SERVICE WIRE BRACKET SEE TB-4193.

POLE DU 1/28 N TANGENT STRUCTURE (1 REQ'D)			LOAD CASE (LOADS INCLUDE LOAD FACTORS, LBS.)				
			1 NESC MEDIUM	2 NESC EX-WIND	3 NESC EXT ICE & WIND	4 BROKEN (SEE NOTE 9)	5 NESC MEDIUM UNFAC
OPGW EL. 148.00'	TRANSVERSE	(T)	-568	-654	-133	140	-228
	LONGITUDINAL	(L)	0	0	0	0	0
	VERTICAL	(V)	648	253	419	262	432
OPGW EL. 148.00' BROKEN	TRANSVERSE	(T)	--	--	--	-78	--
	LONGITUDINAL	(L)	--	--	--	11825	--
	VERTICAL	(V)	--	--	--	203	--
SHIELD EL. 148.00'	TRANSVERSE	(T)	-394	-344	-90	80	-157
	LONGITUDINAL	(L)	0	0	0	0	0
	VERTICAL	(V)	395	144	250	149	264
SHIELD EL. 148.00' BROKEN	TRANSVERSE	(T)	--	--	--	-41	--
	LONGITUDINAL	(L)	--	--	--	8912	--
	VERTICAL	(V)	--	--	--	130	--
MALLARD 230KV EL. 134.00', 120.00, 106.00'	TRANSVERSE	(T)	-712	-927	-166	200	-280
	LONGITUDINAL	(L)	0	167	-95	-137	0
	VERTICAL	(V)	2379	1363	1580	1377	1586
MALLARD 230KV BROKEN EL. 134.00' 120.00'	TRANSVERSE	(T)	--	--	--	-111	--
	LONGITUDINAL	(L)	--	--	--	11903	--
	VERTICAL	(V)	--	--	--	769	--
RAIL 26KV EL. 90.00'	TRANSVERSE	(T)	-1996	-1415	-937	-1046	-1108
	LONGITUDINAL	(L)	-6917	-3637	-4094	-2973	-4184
	VERTICAL	(V)	1544	844	1031	707	1030
RAIL 26KV EL. 90.00'	TRANSVERSE	(T)	-1662	-1105	-786	-754	-921
	LONGITUDINAL	(L)	-8588	-4782	-4981	-3739	-5200
	VERTICAL	(V)	1590	821	1071	660	1080
NEUTRAL EL. 80.00'	TRANSVERSE	(T)	-484	-549	-111	-120	-193
	LONGITUDINAL	(L)	0	51	-81	-90	0
	VERTICAL	(V)	716	313	477	301	477
WIND ON POLE	Wp (PSF)		10.00	18.50	2.30	4.00	4.00

ONE INCH AT FULL SIZE	REVISIONS					
	REV	DATE	MF	DESCRIPTION	W.O. #	
	DR	CK	APP			
	0	04/26/11			VWD	W.O. # 1827201

IRVING SELTON OGI — STATE OF WASHINGTON — 23207 — STRUCTURAL ENGINEER — PROFESSIONAL ENGINEER — 10-14-11

Seattle City Light		
SIGNATURE		DATE
DR :	V. DONG	04/26/2011
CK :		
DSGN :	I. Ogi	10/14/11
CK :		
APP :	Irving Ogi	10/14/11

OVERHEAD TRANSMISSION
SOUTH TRANSMISSION
DUWAMISH TO CRESTON
230KV-26 KV POLE # DU 1/28 N
DESIGN LOADING

SHEET 3 OF 23

CLASS **S-3**

DRAWING NO. **TB-4180**

SCALE: AS NOTED

REV. NO. 0

I:\DU_293\VINH\NORMAN\DUWA TO CRESTON\TB-4180.dwg
dongv Oct/14/2011 6:28am

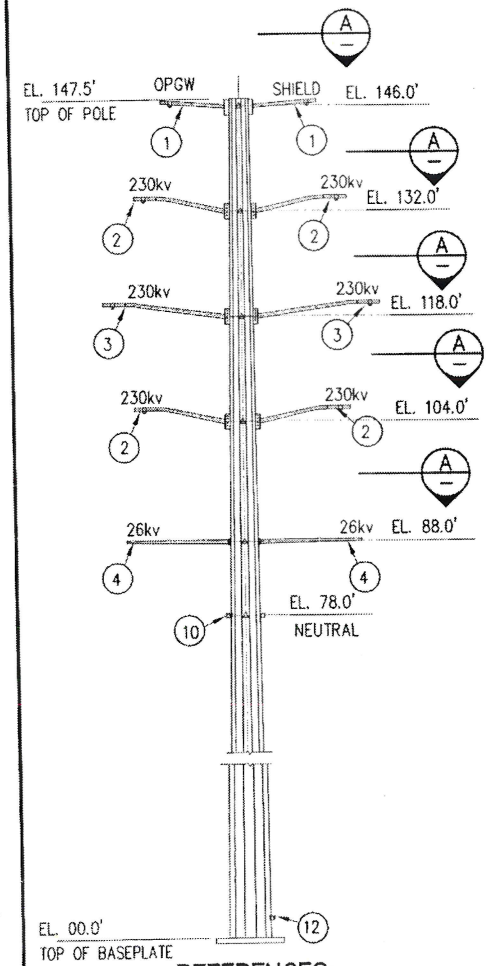

REFERENCES:

N.T.S.

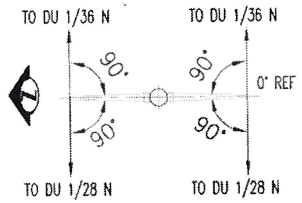

PLAN A

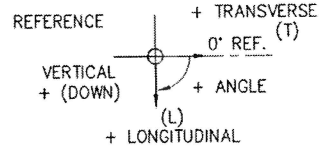

LOADING REFERENCE

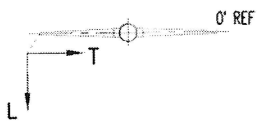

OPGW LOAD: @ ELV. 146.0'

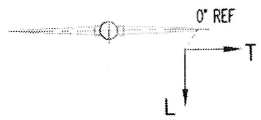

SHIELD LOAD: @ ELV. 146.0'

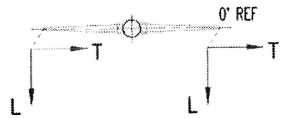

230kv LOAD: @ ELV. 132.0', 118.0' @ 104.0'

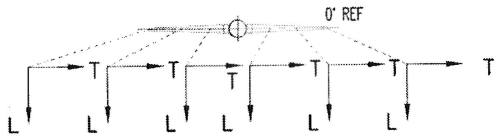

26kv LOAD: @ ELV. 88.0'

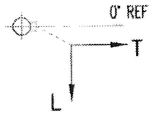

NEUTRAL LOAD: @ ELV. 78.0'

LOADING PLANS

NOTES

1. FOR GENERAL NOTES, SEE TB-4178.
2. ITEM DESIGNATED (X) ARE SHOWN ON TB-4188 TO TB-4200.
3. DEFLECTION CRITERIA: MAX. DEFLECTION AT TOP OF POLE <1% OF POLE LENGTH FOR NESC MEDIUM UNFACTORED LOAD CASE.
4. NO POLE CAMBER ALLOWED.
5. FOR JACKING NUTS, SEE TB-4200.
6. FOR LADDER BRACKET SEE TB-4196.
7. FOR SAFETY CABLE BRACKET SEE TB-4197.
8. FOR ATTACHMENTS NEAR POLE TOP SEE TB-4194
9. FOR BROKEN CONDUCTOR LOAD CASE SEE TB-4178, NOTE 8a.

POLE DU 1/33 N TANGENT STRUCTURE (1 REQ'D)			LOAD CASE (LOADS INCLUDE LOAD FACTORS, LBS.)				
			1 NESC MEDIUM	2 NESC EX-WIND	3 NESC EXT ICE & WIND	4 BROKEN (SEE NOTE 9)	5 NESC MEDIUM UNFAC
OPGW EL. 146.00'	TRANSVERSE	(T)	446	509	107	122	181
	LONGITUDINAL	(L)	0	0	0	0	0
	VERTICAL	(V)	672	319	457	312	448
OPGW EL. 146.00' BROKEN	TRANSVERSE	(T)	--	--	--	52	--
	LONGITUDINAL	(L)	--	--	--	-11825	--
	VERTICAL	(V)	--	--	--	86	--
SHIELD EL. 146.00'	TRANSVERSE	(T)	297	262	65	51	117
	LONGITUDINAL	(L)	0	0	0	0	0
	VERTICAL	(V)	425	204	293	201	283
SHIELD EL. 146.00' BROKEN	TRANSVERSE	(T)	--	--	--	18	--
	LONGITUDINAL	(L)	--	--	--	-8912	--
	VERTICAL	(V)	--	--	--	55	--
MALLARD 230KV EL. 132.00', 118.00, 104.00'	TRANSVERSE	(T)	541	718	121	169	214
	LONGITUDINAL	(L)	-35	391	-218	-339	-21
	VERTICAL	(V)	2279	1351	1522	1334	1519
MALLARD 230KV BROKEN EL. 132.00' 118.00'	TRANSVERSE	(T)	--	--	--	71	--
	LONGITUDINAL	(L)	--	--	--	-12379	--
	VERTICAL	(V)	--	--	--	556	--
RAIL 26KV EL. 88.00'	TRANSVERSE	(T)	525	694	121	153	210
	LONGITUDINAL	(L)	0	549	-215	54	0
	VERTICAL	(V)	1128	580	754	562	752
NEUTRAL EL. 78.00'	TRANSVERSE	(T)	381	428	88	95	152
	LONGITUDINAL	(L)	-16	222	-205	-260	-10
	VERTICAL	(V)	551	245	368	232	367
WIND ON POLE	Wp (PSF)		10.00	18.50	2.30	4.00	4.00

ONE INCH AT FULL SIZE

REVISIONS

REV	DATE	MF
DR	CK	APP
W.O. #	DESCRIPTION	
0	04/26/11	
VWD	W.O. # 182720'	

IRVING SEITOKAS OGI
STATE OF WASHINGTON
23207
STRUCTURAL ENGINEER
PROFESSIONAL ENGINEER
10/14/11

Seattle City Light

SIGNATURE		DATE
DR	: V. DONG	04/26/2011
CK	:	
DSGN	:	10/14/11
CK	:	
APP	:	10/14/11

OVERHEAD TRANSMISSION
SOUTH TRANSMISSION
DUWAMISH TO CRESTON
230KV-26 KV POLE # DU 1/33 N
DESIGN LOADING

SHEET 4 OF 23

CLASS S-4

DRAWING NO. TB-4181

SCALE AS NOTED

REV. NO. 0

E:\DU_293\VINH\NORMAN\DUWM TO CRESTON\TB-4181.dwg
dongv Oct/14/2011 6:28am

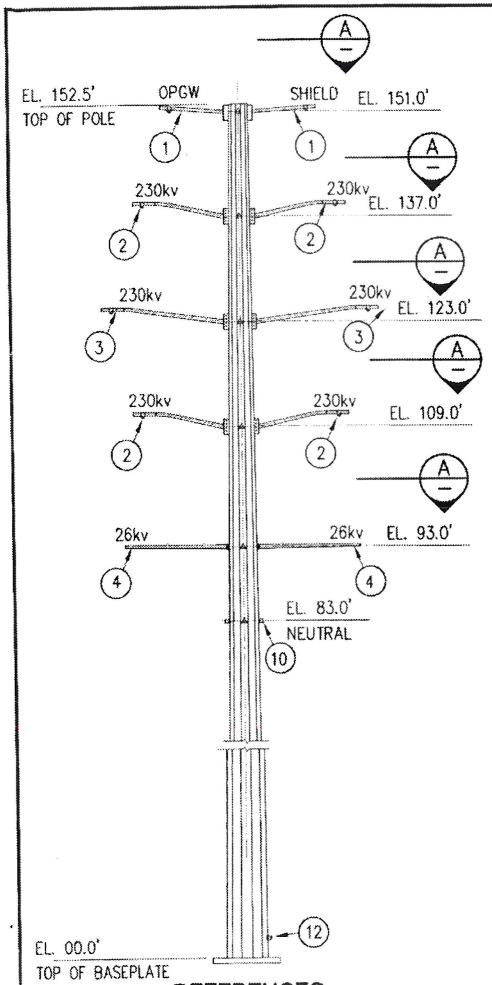

REFERENCES:

N.T.S.

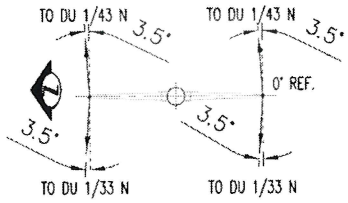

PLAN A

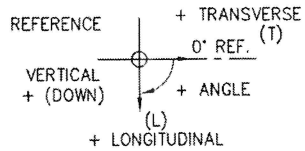

LOADING REFERENCE

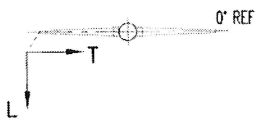

OPGW LOAD: @ ELV. 151.0'

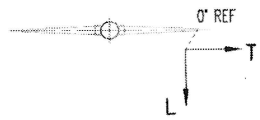

SHIELD LOAD: @ ELV. 151.0'

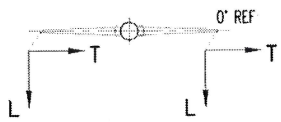

230kv LOAD: @ ELV. 137.0', 123.0' @ 109.0'

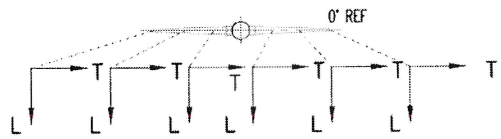

26kv LOAD: @ ELV. 93.0'

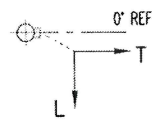

NEUTRAL LOAD: @ ELV. 83.0'

LOADING PLANS

NOTES

1. FOR GENERAL NOTES, SEE TB-4178.
2. ITEM DESIGNATED (X) ARE SHOWN ON TB-4188 TO TB-4200.
3. DEFLECTION CRITERIA: MAX. DEFLECTION AT TOP OF POLE <1% OF POLE LENGTH FOR NESC MEDIUM UNFACTORED LOAD CASE.
4. NO POLE CAMBER ALLOWED.
5. FOR JACKING NUTS, SEE TB-4200.
6. FOR LADDER BRACKET SEE TB-4196.
7. FOR SAFETY CABLE BRACKET SEE TB-4197.
8. FOR ATTACHMENTS NEAR POLE TOP SEE TB-4194
9. FOR BROKEN CONDUCTOR LOAD CASE SEE TB-4178, NOTE 8a.

POLE DU 1/36 N TANGENT STRUCTURE (1 REQ'D)			LOAD CASE (LOADS INCLUDE LOAD FACTORS, LBS.)				
			1 NESC MEDIUM	2 NESC EX-WIND	3 NESC EXT ICE & WIND	4 BROKEN (SEE NOTE 9)	5 NESC MEDIUM UNFAC
OPGW EL. 151.00'	TRANSVERSE	(T)	-1228	-333	-907	-1405	-850
	LONGITUDINAL	(L)	0	0	0	0	0
	VERTICAL	(V)	656	275	432	279	437
OPGW EL. 151.00' BROKEN	TRANSVERSE	(T)	--	--	--	-678	--
	LONGITUDINAL	(L)	--	--	--	-11806	--
	VERTICAL	(V)	--	--	--	157	--
SHIELD EL. 151.00'	TRANSVERSE	(T)	-908	-353	-651	-1077	-625
	LONGITUDINAL	(L)	0	0	0	0	0
	VERTICAL	(V)	406	165	265	167	271
SHIELD EL. 151.00' BROKEN	TRANSVERSE	(T)	--	--	--	-530	--
	LONGITUDINAL	(L)	--	--	--	-8897	--
	VERTICAL	(V)	--	--	--	91	--
MALLARD 230KV EL. 137.00', 123.00, 109.00'	TRANSVERSE	(T)	-1263	-165	-956	-1381	-899
	LONGITUDINAL	(L)	38	-669	397	581	26
	VERTICAL	(V)	2351	1358	1569	1367	1568
MALLARD 230KV BROKEN EL. 137.00' 123.00'	TRANSVERSE	(T)	--	--	--	-640	--
	LONGITUDINAL	(L)	--	--	--	-11775	--
	VERTICAL	(V)	--	--	--	747	--
RAIL 26KV EL. 93.00'	TRANSVERSE	(T)	-1092	-55	-837	-1030	-788
	LONGITUDINAL	(L)	0	-889	398	-66	0
	VERTICAL	(V)	1231	607	823	612	820
NEUTRAL EL. 83.00'	TRANSVERSE	(T)	-410	48	-357	-445	-339
	LONGITUDINAL	(L)	0	-323	337	401	0
	VERTICAL	(V)	634	270	425	267	423
WIND ON POLE	Wp	(PSF)	10	18.5	2.3	4	4

ONE INCH AT FULL SIZE

REVISIONS

REV	DATE	MF
DR	CK	APP
W.O. #		
DESCRIPTION		
0	04/26/11	
V.WC	W.O. # 1827201	

IRVING SEITOKU OGI — STATE OF WASHINGTON — 23207 — STRUCTURAL ENGINEER — PROFESSIONAL ENGINEER — 10-14-11

Seattle City Light

SIGNATURE	DATE
DR : V. DONG	04/26/2011
CK :	
DSGN :	10/14/11
CK :	
APP :	10/14/11

OVERHEAD TRANSMISSION
SOUTH TRANSMISSION
DUWAMISH TO CRESTON
230KV-26 KV POLE # DU 1/36 N
DESIGN LOADING

SHEET 5 OF 23

CLASS S-5

DRAWING NO. TB-4182

SCALE AS NOTED

REV. NO. 0

I:\DU_293\VANH\NORMAN\DUWM TO CRESTON\TB-4182.dwg
dongv Oct/14/2011 6:27am

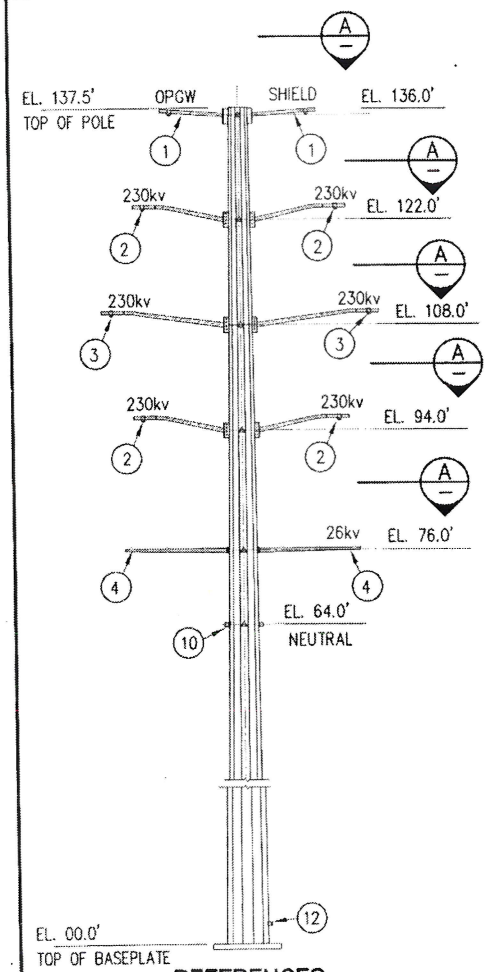

REFERENCES:

N.T.S.

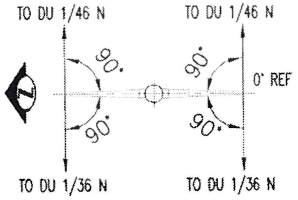

PLAN

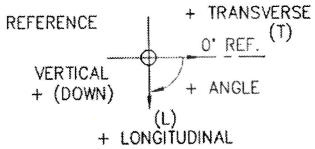

LOADING REFERENCE

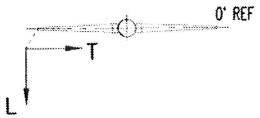

OPGW LOAD: @ ELV. 136.0'

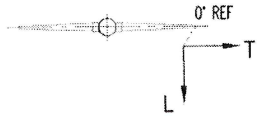

SHIELD LOAD: @ ELV. 136.0'

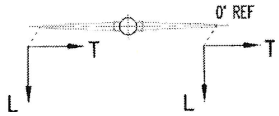

230kv LOAD: @ ELV. 122.0', 108.0' @ 94.0'

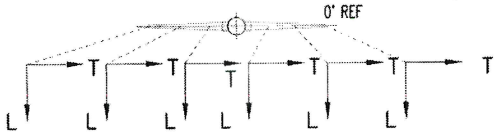

26kv LOAD: @ ELV. 76.0'

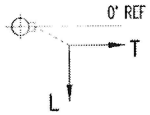

NEUTRAL LOAD: @ ELV. 64.0'

LOADING PLANS

NOTES

1. FOR GENERAL NOTES, SEE TB-4178.
2. ITEM DESIGNATED (X) ARE SHOWN ON TB-4188 TO TB-4200.
3. DEFLECTION CRITERIA: MAX. DEFLECTION AT TOP OF POLE <1% OF POLE LENGTH FOR NESC MEDIUM UNFACTORED LOAD CASE.
4. NO POLE CAMBER ALLOWED.
5. FOR JACKING NUTS, SEE TB-4200.
6. FOR LADDER BRACKET SEE TB-4196.
7. FOR SAFETY CABLE BRACKET SEE TB-4197.
8. FOR ATTACHMENTS NEAR POLE TOP SEE TB-4194
9. FOR BROKEN CONDUCTOR LOAD CASE SEE TB-4178, NOTE 8a.

POLE DU 1/43 N TANGENT STRUCTURE (1 REQ'D)			LOAD CASE (LOADS INCLUDE LOAD FACTORS, LBS)				
			1 NESC MEDIUM	2 NESC EX-WIND	3 NESC EXT ICE & WIND	4 BROKEN (SEE NOTE 9)	5 NESC MEDIUM UNFAC
OPGW EL. 136.00'	TRANSVERSE	(T)	622	726	151	176	253
	LONGITUDINAL	(L)	353	399	134	179	214
	VERTICAL	(V)	-173	-310	-230	-295	-116
OPGW EL. 136.00' BROKEN	TRANSVERSE	(T)	--	--	--	83	--
	LONGITUDINAL	(L)	--	--	--	-11646	--
	VERTICAL	(V)	--	--	--	-535	--
SHIELD EL. 136.00'	TRANSVERSE	(T)	422	398	92	77	166
	LONGITUDINAL	(L)	76	66	-52	-179	46
	VERTICAL	(V)	-144	-273	-220	-246	-96
SHIELD EL. 136.00' BROKEN	TRANSVERSE	(T)	--	--	--	25	--
	LONGITUDINAL	(L)	--	--	--	-9091	--
	VERTICAL	(V)	--	--	--	-429	--
MALLARD 230KV EL. 122.00', 108.00, 94.00'	TRANSVERSE	(T)	699	935	152	230	274
	LONGITUDINAL	(L)	123	476	-147	-176	74
	VERTICAL	(V)	1354	698	846	802	903
MALLARD 230KV BROKEN EL. 122.00' 108.00'	TRANSVERSE	(T)	--	--	--	108	--
	LONGITUDINAL	(L)	--	--	--	-11968	--
	VERTICAL	(V)	--	--	--	-47	--
RAIL 26KV EL. 70.00'	TRANSVERSE	(T)	675	896	152	191	267
	LONGITUDINAL	(L)	113	587	-155	157	68
	VERTICAL	(V)	297	13	147	178	198
NEUTRAL EL. 64.00'	TRANSVERSE	(T)	507	566	120	131	205
	LONGITUDINAL	(L)	63	240	-138	-124	38
	VERTICAL	(V)	178	-72	91	54	119
WIND ON POLE	Wp (PSF)		10.00	18.50	2.30	4.00	4.00

ONE INCH AT FULL SIZE

REVISIONS

REV	DATE	MF
DR	CK	APP
W.O. #		
DESCRIPTION		
0	04/26/11	
VWD	W.O. # 1827201	

IRVING SEITOKUNOGI STATE OF WASHINGTON 23207 STRUCTURAL ENGINEER PROFESSIONAL ENGINEER 10-14-11

Seattle City Light

SIGNATURE		DATE
DR	: V. DONG	04/26/2011
CK	:	
DSGN	:	10/14/11
CK	:	
APP	:	10/14/11

OVERHEAD TRANSMISSION
SOUTH TRANSMISSION
DUWAMISH TO CRESTON
230KV-26 KV POLE # DU 1/43 N
DESIGN LOADING

SHEET 6 OF 23

CLASS S-6

DRAWING NO. TB-4183

SCALE AS NOTED

REV. NO. 0

E:\DU_293\VANH\NORMAN\DUWM TO CRESTON\TB-4183.dwg
dongv Oct/14/2011 6:26am

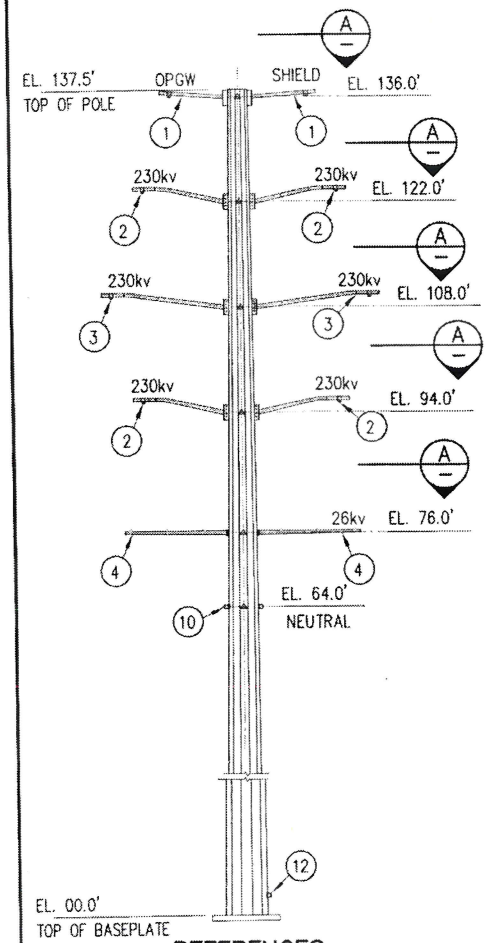

REFERENCES:

N.T.S.

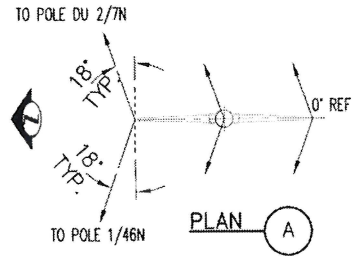

PLAN A

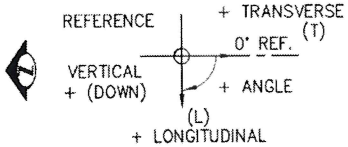

LOADING REFERENCE

OPGW LOAD: @ ELV. 136.0'

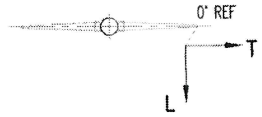

SHIELD LOAD: @ ELV. 136.0'

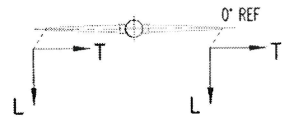

230kv LOAD: @ ELV. 122.0', 108.0' @ 94.0'

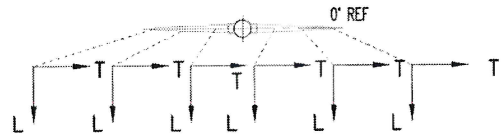

26kv LOAD: @ ELV. 76.0'

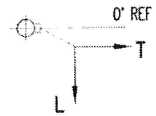

NEUTRAL LOAD: @ ELV. 64.0'

LOADING PLANS

NOTES

1. FOR GENERAL NOTES, SEE TB-4178.
2. ITEM DESIGNATED (X) ARE SHOWN ON TB-4188 TO TB-4200.
3. DEFLECTION CRITERIA: MAX. DEFLECTION AT TOP OF POLE <1% OF POLE LENGTH FOR NESC MEDIUM UNFACTORED LOAD CASE.
4. NO POLE CAMBER ALLOWED.
5. FOR JACKING NUTS, SEE TB-4200.
6. FOR LADDER BRACKET SEE TB-4196.
7. FOR SAFETY CABLE BRACKET SEE TB-4197.
8. FOR ATTACHMENTS NEAR POLE TOP SEE TB-4194
9. FOR BROKEN CONDUCTOR LOAD CASE SEE TB-4178, NOTE 8a.

POLE DU 1/46 N ANGLE STRUCTURE (1 REQ'D)			LOAD CASE (LOADS INCLUDE LOAD FACTORS, LBS)				
			1 NESC MEDIUM	2 NESC EX-WIND	3 NESC EXT ICE & WIND	4 BROKEN (SEE NOTE 9)	5 NESC MEDIUM UNFAC
OPGW EL. 136.00'	TRANSVERSE	(T)	-9028	-5298	-5003	-7361	-5320
	LONGITUDINAL	(L)	-1545	-1237	-581	-522	-946
	VERTICAL	(V)	569	56	373	229	379
OPGW EL. 136.00' BROKEN	TRANSVERSE	(T)	--	--	--	-3147	--
	LONGITUDINAL	(L)	--	--	--	-11382	--
	VERTICAL	(V)	--	--	--	-615	--
SHIELD EL. 136.00'	TRANSVERSE	(T)	-6470	-3577	-3478	-5200	-3812
	LONGITUDINAL	(L)	-152	0	416	1405	-98
	VERTICAL	(V)	428	115	315	245	286
SHIELD EL. 136.00' BROKEN	TRANSVERSE	(T)	--	--	--	-1948	--
	LONGITUDINAL	(L)	--	--	--	-7086	--
	VERTICAL	(V)	--	--	--	-386	--
MALLARD 230KV EL. 122.00', 108.00, 94.00'	TRANSVERSE	(T)	-9779	-5970	-5267	-7361	-5747
	LONGITUDINAL	(L)	-143	-657	342	456	-97
	VERTICAL	(V)	2576	1321	1765	1512	1717
MALLARD 230KV BROKEN EL. 122.00' 108.00'	TRANSVERSE	(T)	--	--	--	-3009	--
	LONGITUDINAL	(L)	--	--	--	-10695	--
	VERTICAL	(V)	--	--	--	134	--
RAIL 26KV EL. 76.00'	TRANSVERSE	(T)	-8746	-5240	-4644	-5842	-5131
	LONGITUDINAL	(L)	-104	-802	345	-174	-73
	VERTICAL	(V)	1389	507	973	682	927
NEUTRAL EL. 64.00'	TRANSVERSE	(T)	-4535	-2791	-2189	-2624	-2626
	LONGITUDINAL	(L)	-27	-180	250	251	-24
	VERTICAL	(V)	811	277	572	356	541
WIND ON POLE	Wp	(PSF)	10.00	18.50	2.30	4.00	4.00

ONE INCH AT FULL SIZE

REVISIONS

REV	DATE	MF
DR	CK	APP
W.O. #		
DESCRIPTION		
0	04/26/11	
VWD	W.O. # 1827201	

IRVING SEITOKU OGI, STATE OF WASHINGTON, 23207, STRUCTURAL ENGINEER, PROFESSIONAL ENGINEER — 10-14-11

Seattle City Light

SIGNATURE		DATE
DR	: V. DONG	04/26/2011
CK	:	
DSGN	:	10/14/11
CK	:	
APP	:	4/11/11

OVERHEAD TRANSMISSION
SOUTH TRANSMISSION
DUWAMISH TO CRESTON
230KV-26 KV POLE # DU 1/46 N
DESIGN LOADING

SHEET 7 OF 23

CLASS S-7

DRAWING NO. TB-4184

SCALE AS NOTED

REV. NO. 0

t:\DU_293\VAH\NORMAN\DUWM TO CRESTON\TB-4184.dwg
dongv Oct/14/2011 6:26am

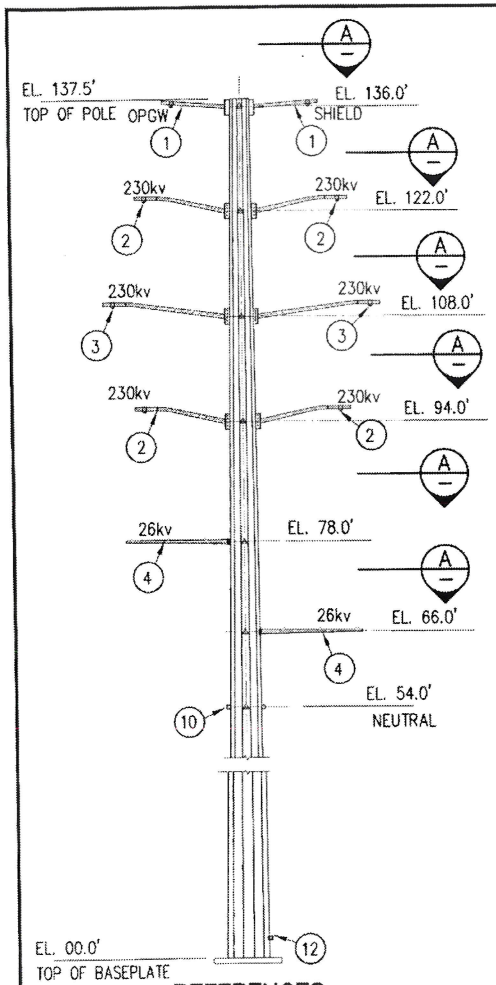

REFERENCES:

N.T.S.

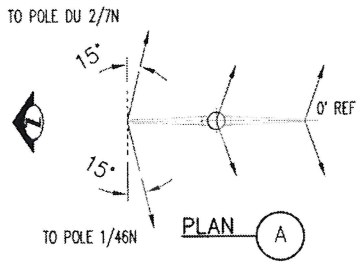

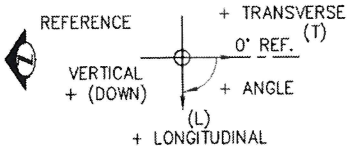

LOADING REFERENCE

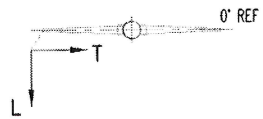

OPGW LOAD: @ ELV. 136.0'

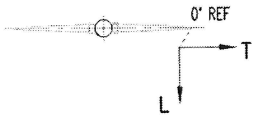

SHIELD LOAD: @ ELV. 136.0'

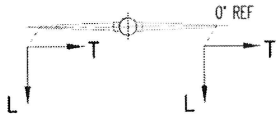

230kv LOAD: @ ELV. 122.0', 108.0' @ 94.0'

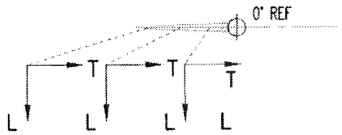

26kv LOAD: @ ELV. 78.0'

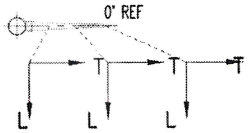

26kv LOAD: @ ELV. 78.0'

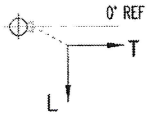

NEUTRAL LOAD: @ ELV. 54.0'

LOADING PLANS

NOTES

1. FOR GENERAL NOTES, SEE TB-4178.
2. ITEM DESIGNATED (X) ARE SHOWN ON TB-4188 TO TB-4200.
3. DEFLECTION CRITERIA: MAX. DEFLECTION AT TOP OF POLE <1% OF POLE LENGTH FOR NESC MEDIUM UNFACTORED LOAD CASE.
4. NO POLE CAMBER ALLOWED.
5. FOR JACKING NUTS, SEE TB-4200.
6. FOR LADDER BRACKET SEE TB-4196.
7. FOR SAFETY CABLE BRACKET SEE TB-4197.
8. FOR ATTACHMENTS NEAR POLE TOP SEE TB-4194
9. FOR BROKEN CONDUCTOR LOAD CASE SEE TB-4178, NOTE 8a.

POLE DU 2/4 N TANGENT STRUCTURE (1 REQ'D)			LOAD CASE (LOADS INCLUDE LOAD FACTORS, LBS)				
			1 NESC MEDIUM	2 NESC EX-WIND	3 NESC EXT ICE & WIND	4 BROKEN (SEE NOTE 9)	5 NESC MEDIUM UNFAC
OPGW EL. 136.00'	TRANSVERSE	(T)	7748	4605	4257	6246	4549
	LONGITUDINAL	(L)	1185	1093	347	153	734
	VERTICAL	(V)	1654	959	1116	769	1103
OPGW EL. 136.00' BROKEN	TRANSVERSE	(T)	–	–	–	3057	–
	LONGITUDINAL	(L)	–	–	–	-11218	–
	VERTICAL	(V)	–	–	–	-500	–
SHIELD EL. 136.00'	TRANSVERSE	(T)	5571	3101	2968	4416	3272
	LONGITUDINAL	(L)	-186	-189	-655	-1852	-101
	VERTICAL	(V)	940	496	597	357	627
SHIELD EL. 136.00' BROKEN	TRANSVERSE	(T)	–	–	–	2440	–
	LONGITUDINAL	(L)	–	–	–	-8930	–
	VERTICAL	(V)	–	–	–	-429	–
MALLARD 230KV EL. 122.00', 108.00, 94.00'	TRANSVERSE	(T)	8400	5187	4493	6246	4916
	LONGITUDINAL	(L)	-406	487	-721	-992	-226
	VERTICAL	(V)	3407	2075	2218	1883	2272
MALLARD 230KV BROKEN EL. 122.00' 108.00'	TRANSVERSE	(T)	–	–	–	3196	–
	LONGITUDINAL	(L)	–	–	–	-11676	–
	VERTICAL	(V)	–	–	–	-29	–
RAIL 26KV EL. 78.00' 66.00'	TRANSVERSE	(T)	5534	3674	2746	3503	3190
	LONGITUDINAL	(L)	5963	3341	3296	4714	3634
	VERTICAL	(V)	2502	1396	1677	1240	1668
NEUTRAL EL. 54.00'	TRANSVERSE	(T)	3474	2225	1596	1871	1987
	LONGITUDINAL	(L)	1378	853	584	909	848
	VERTICAL	(V)	1084	532	706	461	722
WIND ON POLE	Wp	(PSF)	10.00	18.50	2.30	4.00	4.00

ONE INCH AT FULL SIZE

REVISIONS					
REV	DR	W.O. #	DESCRIPTION	DATE	CK	MF	APP
0	VWD	18.27201		04/26/11			

IRVING SEITO MUNGI — STATE OF WASHINGTON — 23207 — STRUCTURAL ENGINEER — PROFESSIONAL ENGINEER — 10-14-11

Seattle City Light

SIGNATURE		DATE
DR	: V. DONG	04/26/2011
CK	:	
DSGN	:	10/14/11
CK	:	
APP	:	10/14/11

OVERHEAD TRANSMISSION
SOUTH TRANSMISSION
DUWAMISH TO CRESTON
230KV-26 KV POLE # DU 2/4 N
DESIGN LOADING

SHEET 8 OF 23

CLASS **S-8**

DRAWING NO. **TB-4185**

SCALE: AS NOTED

REV. NO. 0

E:\DU_293\VINH\NORNAN\DUWA TO CRESTON\TB-4185.dwg
dongv Oct/14/2011 6:25am

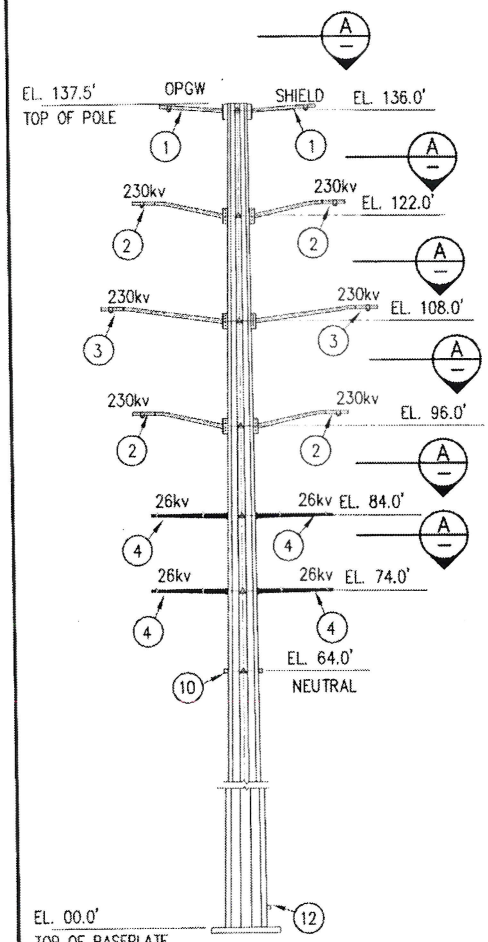

REFERENCES:

N.T.S.

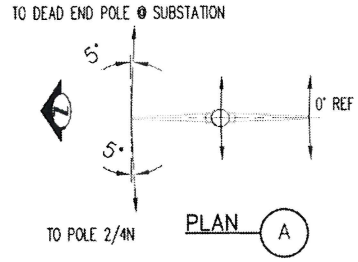

PLAN A

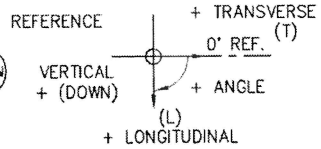

LOADING REFERENCE

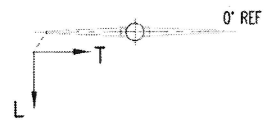

OPGW LOAD: @ ELV. 136.0'

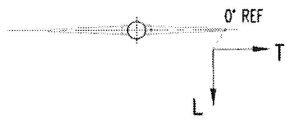

SHIELD LOAD: @ ELV. 136.0'

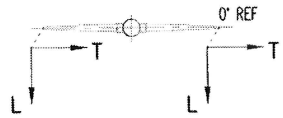

230kv LOAD: @ ELV. 122.0', 108.0' @ 96.0'

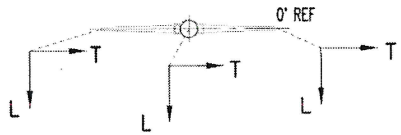

26kv LOAD: @ ELV. 84.0', 74.00'

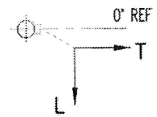

NEUTRAL LOAD: @ ELV. 64.0'

LOADING PLANS

NOTES

1. FOR GENERAL NOTES, SEE TB-4178.
2. ITEM DESIGNATED (X) ARE SHOWN ON TB-4188 TO TB-4200.
3. DEFLECTION CRITERIA: MAX. DEFLECTION AT TOP OF POLE <1% OF POLE LENGTH FOR NESC MEDIUM UNFACTORED LOAD CASE.
4. NO POLE CAMBER ALLOWED.
5. FOR JACKING NUTS, SEE TB-4200.
6. FOR LADDER BRACKET SEE TB-4196.
7. FOR SAFETY CABLE BRACKET SEE TB-4197.
8. FOR ATTACHMENTS NEAR POLE TOP SEE TB-4194
9. FOR BROKEN CONDUCTOR LOAD CASE SEE TB-4178, NOTE 8a.

POLE DU 2/7 N TANGENT STRUCTURE (1 REQ'D)			LOAD CASE (LOADS INCLUDE LOAD FACTORS, LBS)				
			1 NESC MEDIUM	2 NESC EX-WIND	3 NESC EXT ICE & WIND	4 BROKEN (SEE NOTE 9)	5 NESC MEDIUM UNFAC
OPGW EL. 136.00'	TRANSVERSE	(T)	2635	1784	1318	1875	1473
	LONGITUDINAL	(L)	5603	2499	3912	3683	3397
	VERTICAL	(V)	2547	1568	1825	1324	1898
OPGW EL. 136.00' BROKEN	TRANSVERSE	(T)	--	--	--	369	--
	LONGITUDINAL	(L)	--	--	--	-4622	--
	VERTICAL	(V)	--	--	--	551	--
SHIELD EL. 136.00'	TRANSVERSE	(T)	1916	1170	949	1389	1072
	LONGITUDINAL	(L)	4091	2310	3058	3130	2480
	VERTICAL	(V)	1733	1120	1304	976	1156
SHIELD EL. 136.00' BROKEN	TRANSVERSE	(T)	--	--	--	223	--
	LONGITUDINAL	(L)	--	--	--	-3313	--
	VERTICAL	(V)	--	--	--	371	--
MALLARD 230KV EL. 122.00', 108.00, 96.00'	TRANSVERSE	(T)	3320	2309	1675	2329	1865
	LONGITUDINAL	(L)	-204	-732	226	310	-123
	VERTICAL	(V)	3915	2338	2677	2198	2610
MALLARD 230KV BROKEN EL. 122.00' 108.00'	TRANSVERSE	(T)	--	--	--	744	--
	LONGITUDINAL	(L)	--	--	--	-11691	--
	VERTICAL	(V)	--	--	--	909	--
RAIL N 26KV EL. 84.00' 74.00'	TRANSVERSE	(T)	1353	987	633	765	757
	LONGITUDINAL	(L)	-106	1520	-411	914	-56
	VERTICAL	(V)	2366	1173	1647	875	1578
RAIL S 26KV EL. 84.00' 74.00'	TRANSVERSE	(T)	1573	936	787	708	888
	LONGITUDINAL	(L)	-29	1650	-373	943	0
	VERTICAL	(V)	2138	1086	1479	816	1426
NEUTRAL EL. 60.00'	TRANSVERSE	(T)	921	599	424	470	514
	LONGITUDINAL	(L)	0	753	-392	0	0
	VERTICAL	(V)	1542	836	1139	642	1028
WIND ON POLE	Wp (PSF)		10.00	18.50	2.30	4.00	4.00

ONE INCH AT FULL SIZE

REVISIONS

REV	DATE	MF
DR	CK	APP
W.O. #		

DESCRIPTION	
0	04/26/11
VWD	W.O. # 1827201

IRVING SEITOKUNOGI — STATE OF WASHINGTON — 23207 — STRUCTURAL ENGINEER — PROFESSIONAL ENGINEER — 10-14-11

Seattle City Light

SIGNATURE		DATE
DR	: V. DONG	04/26/2011
CK	:	
DSGN	:	10/14/11
CK	:	
APP	:	10/14/11

OVERHEAD TRANSMISSION
SOUTH TRANSMISSION
DUWAMISH TO CRESTON
230KV-26 KV POLE # DU 2/7 N
DESIGN LOADING

SHEET 9 OF 23

CLASS **S-9**

DRAWING NO. **TB-4186**

SCALE: AS NOTED

REV. NO. 0

I:\DU_293\WNN\WORMAN\DU#4 TO CRESTON\TB-4186.dwg
dorgv Oct/14/2011 6:25am

NOTES:

1. SEE DRAWING TB-4178 FOR GENERAL NOTES.
2. SEE DRAWING TB-4179 TO TB-4186 FOR ARM LOCATION AND ORIENTATION.
3. ARM TO POLE CONNECTION SHOWN IS FOR ILLUSTRATION ONLY. TYPE OF CONNECTION SHALL BE DESIGNED BY THE POLE MANUFACTURER.
4. DESIGN ALL ARMS AND VANGS FOR THE FOLLOWING FACTORED LOADS (U.N.O).:
   LONGITUDINAL = ±12.5 KIPS
   TRANSVERSE = 10.0 KIPS (COMP. OR TENSION)
   VERTICAL = 3.0 KIPS DOWN
5. FOR ARM DESIGN APPLY LOADS AT OUTER CONDUCTOR VANG. LIMIT HORIZONTAL ARM DEFLECTION TO 1 1/2% OF ARM LENGTH AT END OF ARMS.
6. CHAMFER ALL HOLES.

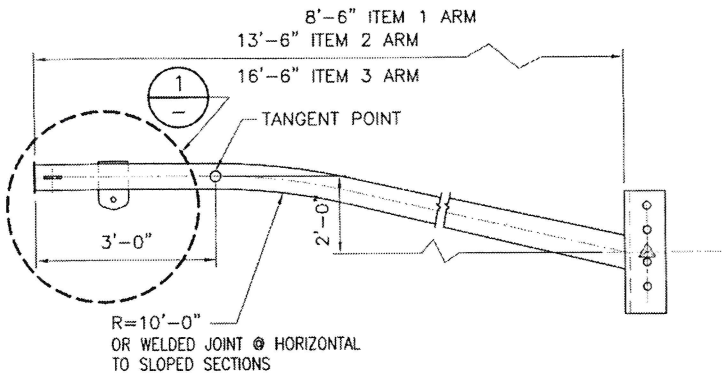

ELEVATION – POLE ARMS
N.T.S ITEMS 2 & 3

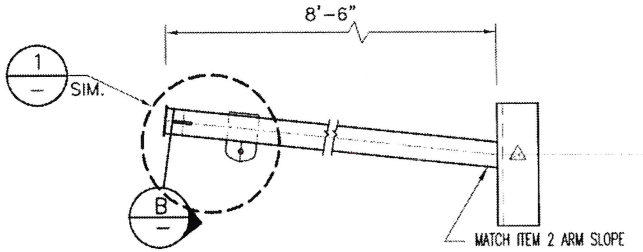

ELEVATION – 8'-6" ARM–ITEM 1
N.T.S.

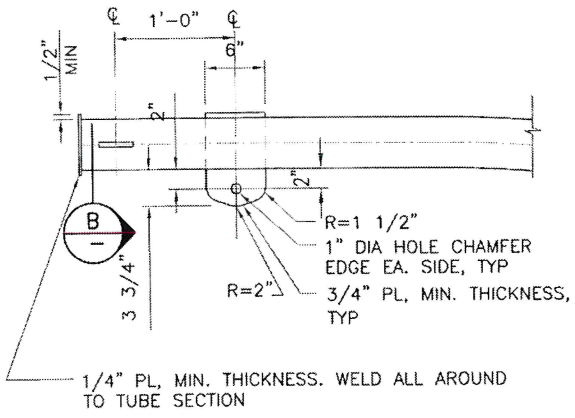

DETAIL 1
SCALE: 1"=1'-0"

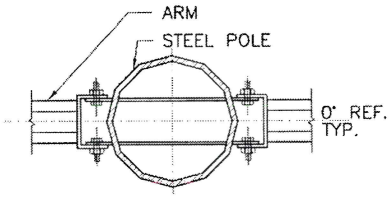

SECTION SEE NOTE 3 A
N.T.S.

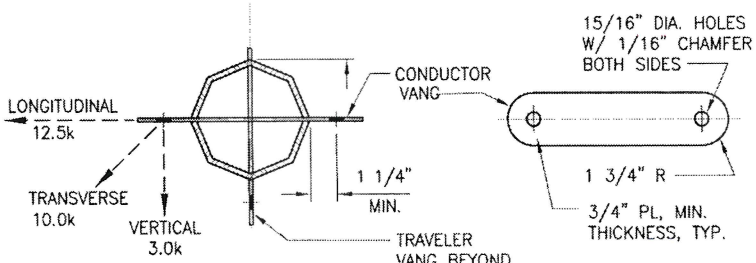

SECTION B
N.T.S.

REVISIONS			
REV	DATE	MF	
DR	CK	APP	
W.O. #			
DESCRIPTION			
0	04/26/11		
VWD			
W.O # 1827201			

ONE INCH AT FULL SIZE

IRVING SEITOKUOGI
STATE OF WASHINGTON
23207
STRUCTURAL ENGINEER
PROFESSIONAL ENGINEER
10-14-11

Seattle City Light

SIGNATURE	DATE
DR : V. DONG	04/26/2011
CK :	
DSGN :	10/14/11
CK :	
APP :	10/14/11

OVERHEAD TRANSMISSION
SOUTH TRANSMISSION

DUWAMISH TO CRESTON
230KV-ARMS/SHIELD ARMS
DIMENSIONS & DESIGN LOADING

SHEET 11 OF 23
CLASS S-11
DRAWING NO. TB-4188
SCALE AS NOTED
REV. NO. 0

I:\OU_293\VINH\NORMAN\DUWM TO CRESTON\TB-4188.dwg
dongv Oct/14/2011 6:22am

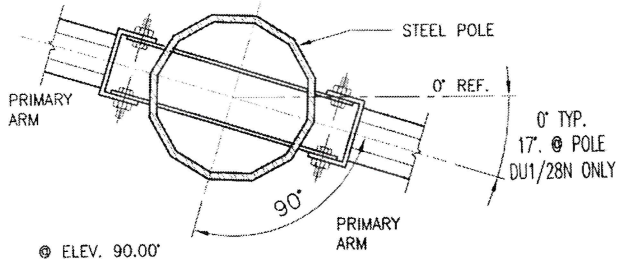

PLAN ARM
N.T.S.

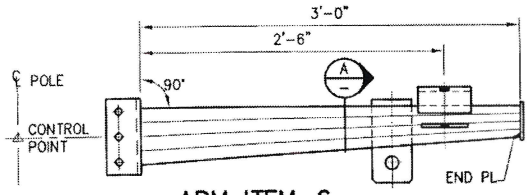

ARM ITEM-6
N.T.S.

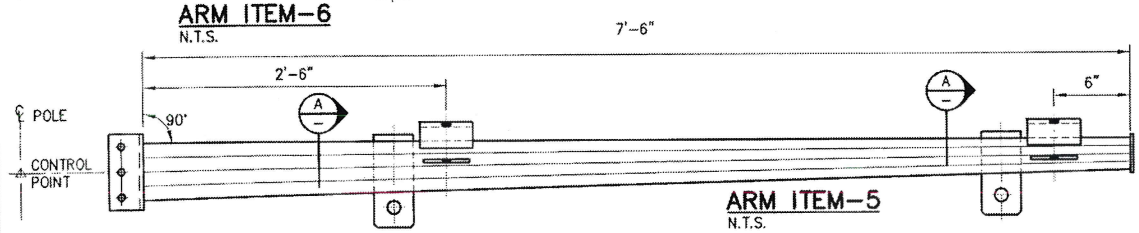

ARM ITEM-5
N.T.S.

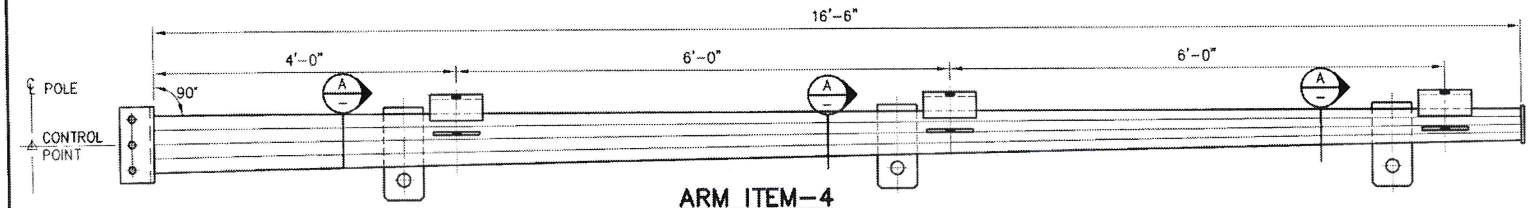

ARM ITEM-4
N.T.S.

NOTES

1. SEE DRAWING TB-4178 FOR GENERAL NOTES.
2. SEE DRAWING TB-4179 THRU TB-4186 FOR ARM LOCATION AND ORIENTATION.
3. ARM TO POLE CONNECTION SHOWN IS FOR ILLUSTRATION ONLY, TYPE OF CONNECTION SHALL BE DESIGNED BY THE POLE MANUFACTURER.
4. DESIGN ALL PRIMARY AND SECONDARY ARMS, VANGS AND VANGS AND ATTACHMENTS FOR THE FOLLOWING FACTORED LOADS (U.N.O).:
   LONGITUDINAL = 9.0 KIPS
   TRANSVERSE = 6.0 KIPS
   VERTICAL = 3.0 KIPS DOWN

   FOR ARM DESIGN APPLY LOADS ON ONE SIDE OF ARM AT END OF ARM. LIMIT HORIZONTAL ARM DEFECTION TO 1 1/2% OF ARM LENGTH AT END OF ARM.

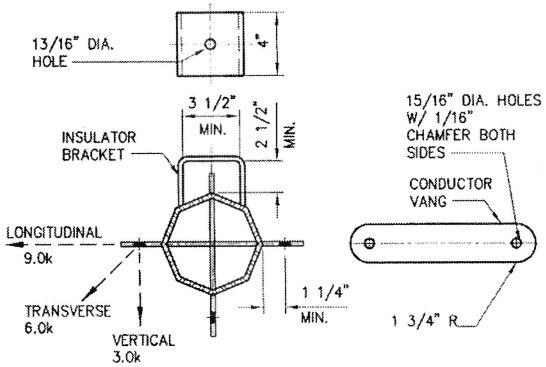

SECTION
N.T.S.

ONE INCH AT FULL SIZE

REVISIONS		
REV	DATE	MF
DR	CK	APP
W.O. #		
DESCRIPTION		
0	04/26/11	
VWD		
W.O. #	1827201	

IRVING SEITOKU OGI — STATE OF WASHINGTON — 23207 — STRUCTURAL ENGINEER — PROFESSIONAL ENGINEER — 10-14-11

Seattle City Light

SIGNATURE	DATE
DR : V. DONG	04/26/2011
CK :	
DSGN : S. Ogi	10/14/11
CK :	
APP : Irving S. Ogi	10/14/11

OVERHEAD TRANSMISSION
SOUTH TRANSMISSION
DUWAMISH TO CRESTON
26KV-ARMS
DIMENSIONS & DESIGN LOADING

SHEET 12 OF 23
CLASS S-12
DRAWING NO. TB-4189
SCALE AS NOTED
REV. NO. 0

I:\OU_293\VINH\NORMAN\DUWM TO CRESTON\TB-4189.dwg
dongv Oct/14/2011 6:23am

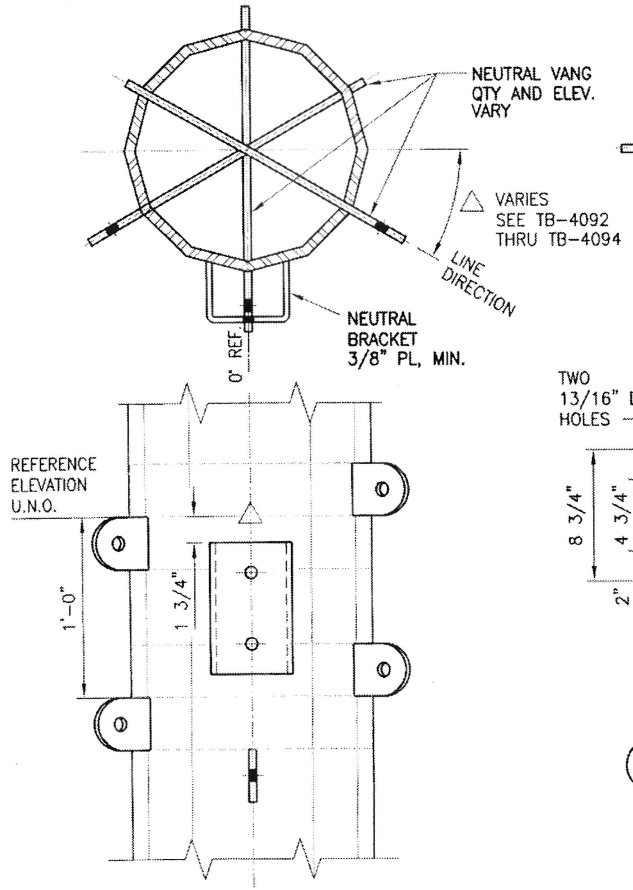

NEUTRAL CONNECTION–SCHEMATIC

N.T.S.

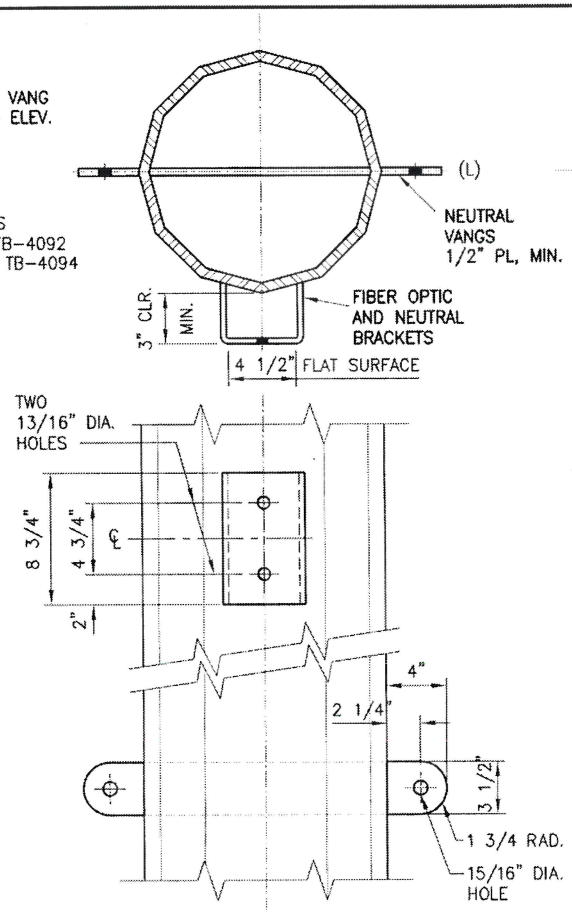

NEUTRAL BRACKET & VANG DIMENSIONS

N.T.S.

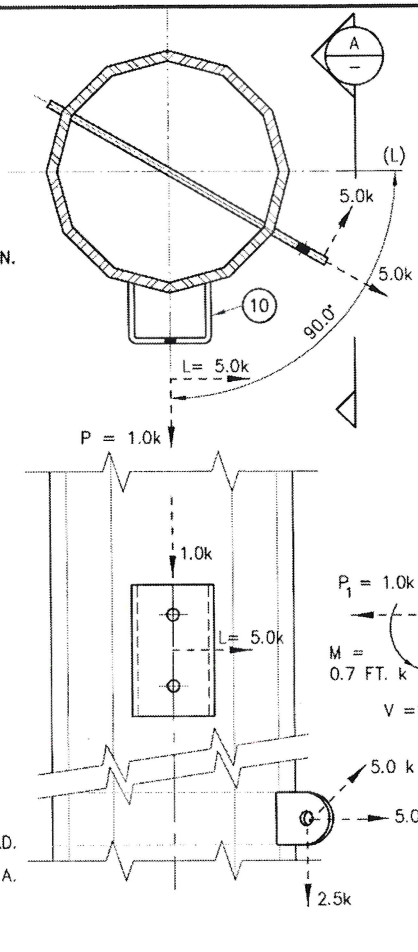

DESIGN LOADING

N.T.S.

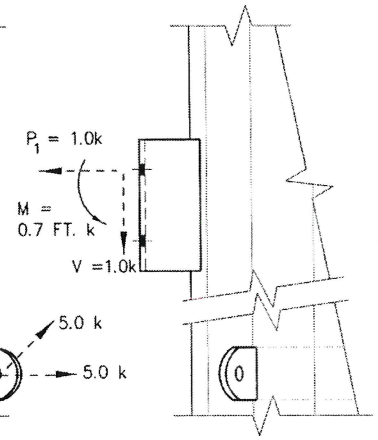

ELEVATION

N.T.S.

A

NOTES

1. VANG DESIGN LOADS SHOWN ARE FACTORED LOADS.
2. VANG PL 3/4" MIN. THICKNESS. POLE MANUFACTURER. TO PROVIDE CALCULATIONS W/ SUBMITTALS TO VERIFY ADEQUACY OF MIN. THICKNESS, PROVIDE GREATER THICKNESS AS NECESSARY.

REVISIONS				
REV	DATE	MF		
DR	CK	APP		
W.O. #				
DESCRIPTION				
0	04/26/11			
VWD				
W.O. # 1827201				

ONE INCH AT FULL SIZE

IRVING SEITOKUDOGI — STATE OF WASHINGTON — 23207 — STRUCTURAL ENGINEER — PROFESSIONAL ENGINEER — 10/14/11

Seattle City Light		
SIGNATURE		DATE
DR	: V. DONG	04/26/2011
CK	:	
DSGN	:	10/14/11
CK	:	
APP	:	10/14/11

OVERHEAD TRANSMISSION
SOUTH TRANSMISSION
DUWAMISH TO CRESTON
26KV-NEUTRAL ATTACHMENT
DIMENSIONS & DESIGN LOADING

SHEET 14 OF 23
CLASS S-14
DRAWING NO. TB-4191
SCALE AS NOTED
REV. NO. 0

I:\DU_293\VINH\NORMAN\DUWM TO CRESTON\TB-4191.dwg
dongv Oct/14/2011 6:23am

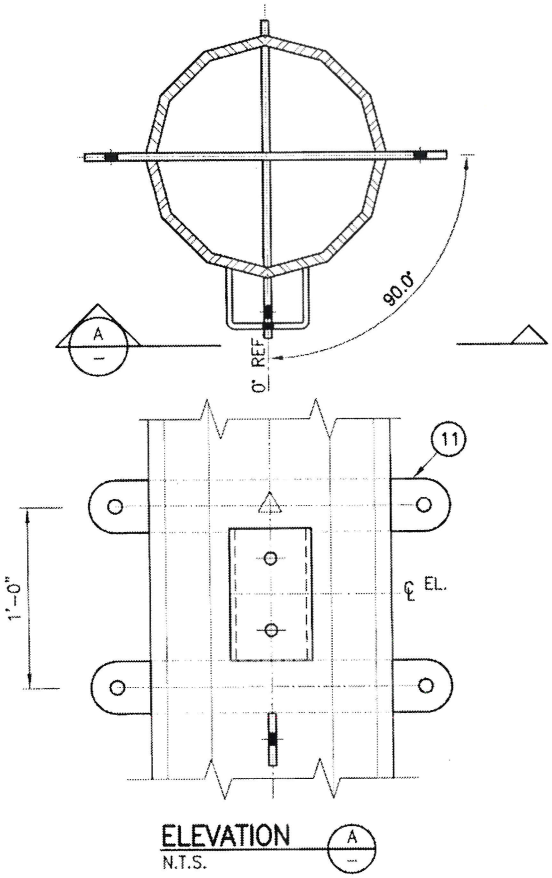

ELEVATION A
N.T.S.

NEUTRAL BRACKET AND VANG
POLES– DU 1/24 N, DU 1/33 N, DU 1/36 N, DU 1/43 N, DU 1/46 N, DU 2/4 N, & DU 2/7 N

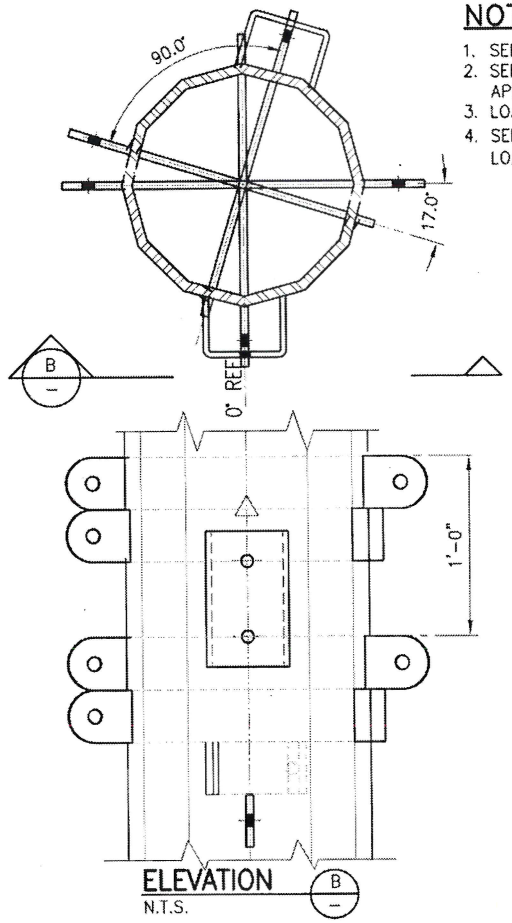

ELEVATION B
N.T.S.

NEUTRAL BRACKET AND VANG
– POLE DU 1/28 N

NOTES

1. SEE DRAWING TB-4178 FOR GENERAL NOTES.
2. SEE DRAWING TB-4179 THRU TB-4187 FOR APPLIED POLE LOADS.
3. LOADS SHOWN ARE NESC FACTORED LOADS.
4. SEE TB-4191 FOR BRACKET AND VANG DETAILS LOADING.

ONE INCH
AT FULL SIZE

REVISIONS

REV	DATE	MF
DR	CK	APP
W.O. #		
DESCRIPTION		
0	04/26/11	
VWD		
W.O. # 1827201		

IRVING SEITOKU LOGI
STATE OF WASHINGTON
23207
STRUCTURAL ENGINEER
PROFESSIONAL ENGINEER
10-14-11

Seattle City Light

SIGNATURE	DATE
DR : V. DONG	04/26/2011
CK :	
DSGN :	10/14/11
CK :	
APP :	10/14/11

OVERHEAD TRANSMISSION
SOUTH TRANSMISSION

DUWAMISH TO CRESTON
26KV-NEUTRAL ATTACHMENT
CONFIGURATIONS

SHEET 15 OF 23
CLASS S-15
DRAWING NO. TB-4192
SCALE AS NOTED
REV. NO. 0

I:\OL_293\VNH\NORMAN\DUWM TO CRESTON\TB-4192.dwg
dongv Oct/14/2011 6:23am

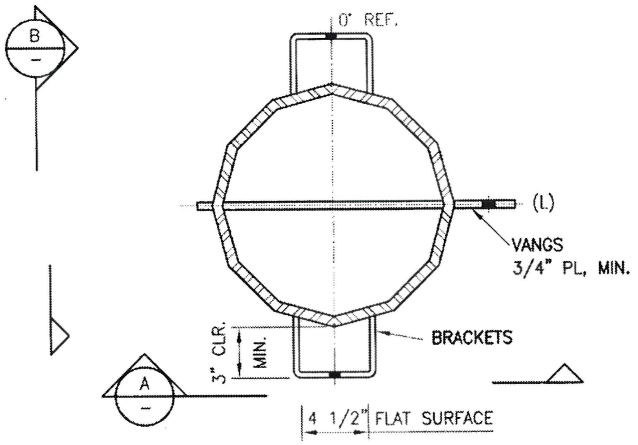

PLAN
N.T.S.

NOTES

1. STREET LIGHT BRACKET DESIGN LOADS SHOWN ARE FACTORED LOADS.

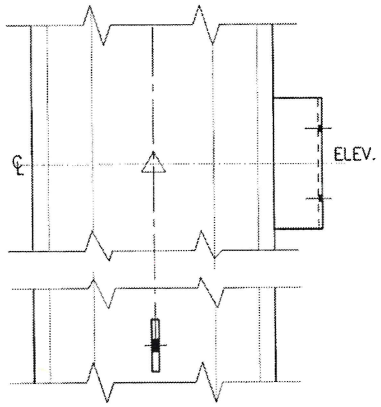

ELEVATION (B)
N.T.S.

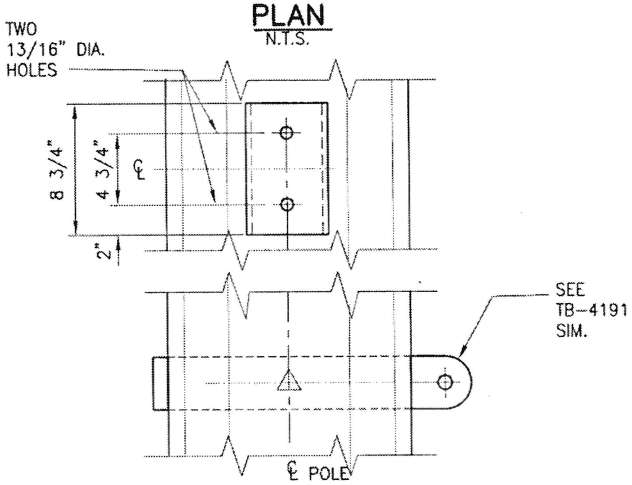

ELEVATION (A)
N.T.S.

SERVICE WIRE BRACKET ITEM 11
POLE DU 1/28 N ONLY

ONE INCH
AT FULL SIZE

REVISIONS

REV	DATE	MF
DR	CK	APP
W.O. #		
DESCRIPTION		
0	04/26/11	
VWD		
W.O. # 1827201		

IRVING SEITOKU OGI
STATE OF WASHINGTON
23207
STRUCTURAL ENGINEER
PROFESSIONAL ENGINEER
10-14-11

Seattle City Light

SIGNATURE		DATE
DR	: V. DONG	04/26/2011
CK	:	
DSGN	: I. Ogi	10/14/11
CK	:	
APP	: Irving S. Ogi	10/14/11

OVERHEAD TRANSMISSION
SOUTH TRANSMISSION
DUWAMISH TO CRESTON
SERVICE WIRE ATTACHMENT DIMENSIONS

SHEET 16 OF 23
CLASS **S-16**
DRAWING NO. **TB-4193**
SCALE **AS NOTED**
REV. NO. **0**

E:\OU_293\VANA\MORGAN\DUWA TO CRESTON\TB-4193.dwg
dongv Oct/14/2011 6:23am

NOTES:

1. SEE DRAWING TB-4178 FOR GENERAL NOTES.
2. FOR POLE DESIGN FORCES SEE TB-4179 THRU. TB-4187

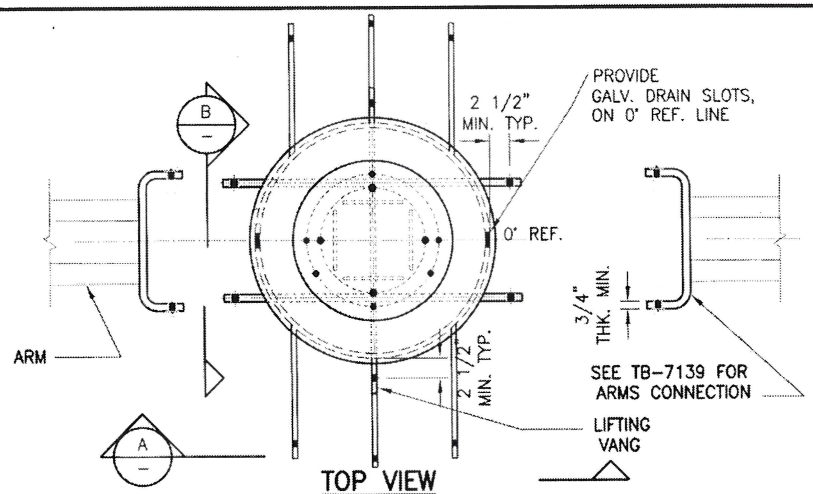

TOP VIEW

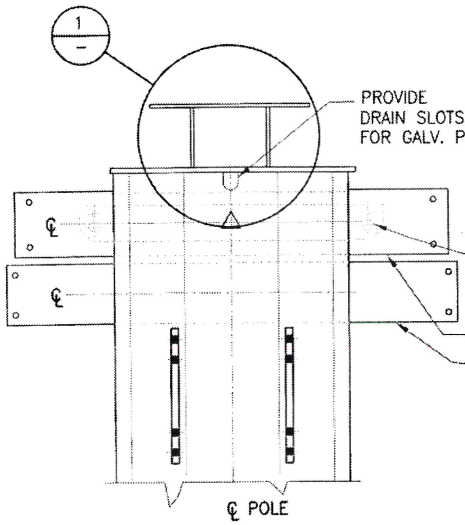

ELEVATION (B) POLE TOP
N.T.S.

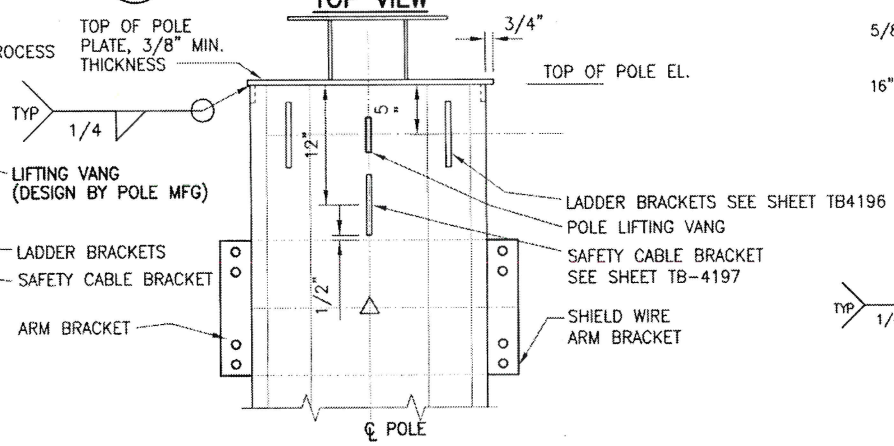

ELEVATION (A) POLE TOP
N.T.S.

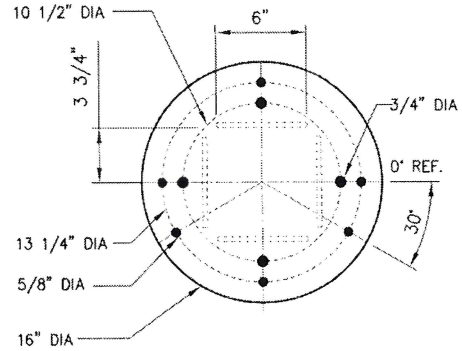

PLAN

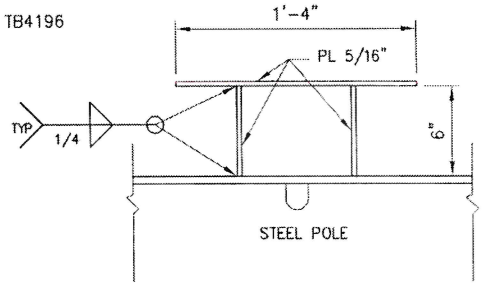

DETAIL (1) FAA BEACON MOUNT
N.T.S.

ONE INCH AT FULL SIZE

REVISIONS

REV	DATE	MF
DR	CK	APP
W.O. #		

	DESCRIPTION		
0		04/26/11	
VWD	W.O. # 1827201		

IRVING SEITOKU OGI — STATE OF WASHINGTON — 23207 — STRUCTURAL ENGINEER — PROFESSIONAL ENGINEER — 10/14/11

Seattle City Light

SIGNATURE		DATE
DR	: V. DONG	04/26/2011
CK	:	
DSGN	: I. Ogi	10/14/11
CK	:	
APP	: Irving S. Ogi	10/14/11

OVERHEAD TRANSMISSION
SOUTH TRANSMISSION
DUWAMISH TO CRESTON
230KV STEEL POLE
POLE TOP DETAILS/FAA BEACON BRACKET

SHEET 17 OF 23

CLASS **S-17**

DRAWING NO. **TB-4194**

SCALE **AS NOTED** REV. NO. **0**

S:\OU_293\VWH\NORMAN\DUWM TO CRESTON\TB-4194.dwg
dongv Oct/14/2011 6:23am

NOTES:

1. LOCATE STUDS ON POLES DU 1/24N. @10'-0" O.C. MAXIMUM VERTICAL SPACING.
2. LOCATE BOTTOM STUDS 2'-0" BELOW SPLICE BOX BOTTOM BRACKETS. THEN 10'-0" O.C. MAX. SPACING.
3. LOCATE TOP STUDS AT 2'-0" BELOW TOP OF POLE.
4. SEE TB-4178 FOR GENERAL NOTES.

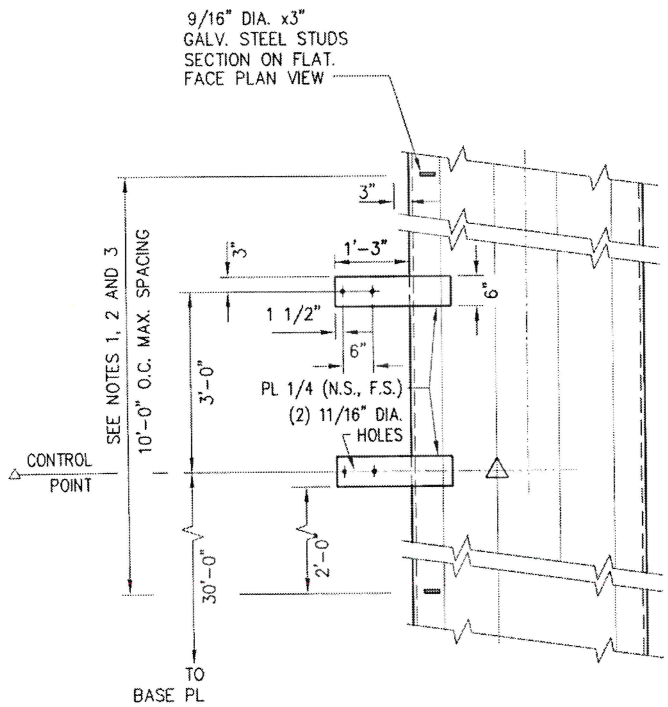

ELEVATION (A) OPGW SPICE BOX MOUNTING BRACKET - ITEM 13

N.T.S.

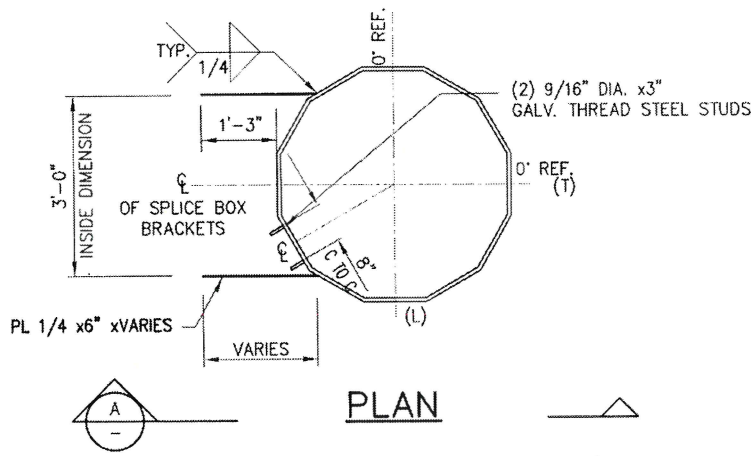

PLAN

MOUNTING @ POLES DU 1/24N

REVISIONS				
REV	DR	CK	DATE	APP
W.O. #	DESCRIPTION			MF
0	VWD		04/26/11	
W.O. # 1827201				

ONE INCH — AT FULL SIZE

IRVING SEITO KUOGI — STATE OF WASHINGTON — 23207 — STRUCTURAL ENGINEER — PROFESSIONAL ENGINEER — 10/14/11

Seattle City Light

SIGNATURE		DATE
DR	: V. DONG	04/26/2011
CK	:	
DSGN	:	10/14/11
CK	:	
APP	:	10/14/11

OVERHEAD TRANSMISSION
SOUTH TRANSMISSION
DUWAMISH TO CRESTON
230KV POLE
OPGW SPLICE BOX MOUNTING

SHEET 18 OF 23

CLASS **S-18**

DRAWING NO. TB-4195

SCALE: AS NOTED

REV. NO. 0

I:\QU_293\VANH\NORMAN\DUWM TO CRESTON\TB-4195.dwg
dongv Oct/14/2011 8:23am

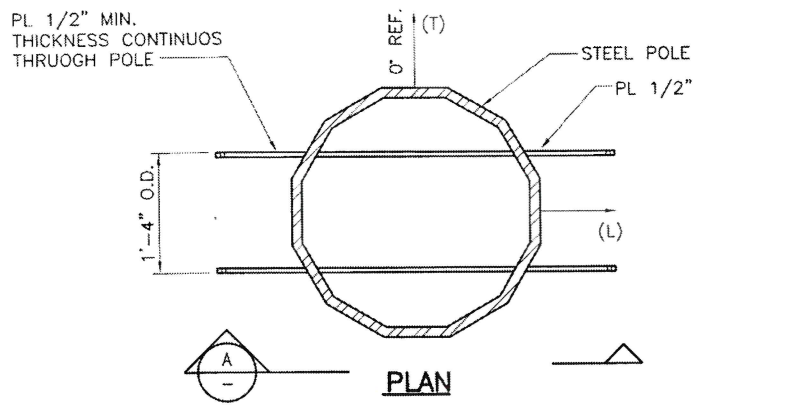

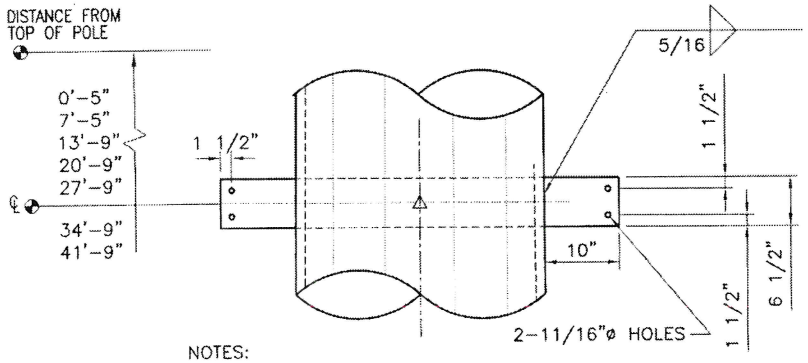

NOTES:

1. WHERE POLE SECTION OVER LAPS LOWER SECTION BRACKET IS NOT CONTINUOUS THROUGH POLE.
2. LADDER BRACKET ATTACHMENT HEIGHTS MAY REQUIRE ADJUSTMENT PENDING POLE SECTION LENGTH AND ATTACHMENT DETAILS

SCL LADDER BRACKETS (A) (TOP POLE SECTION ONLY)

SCALE: 3/4"=1'-0"

NOTES:

1. LADDERS BY SCL, ATTACHMENTS BY POLE MANUFACTURER.
2. SEE TB-4178 FOR GENERAL NOTES.

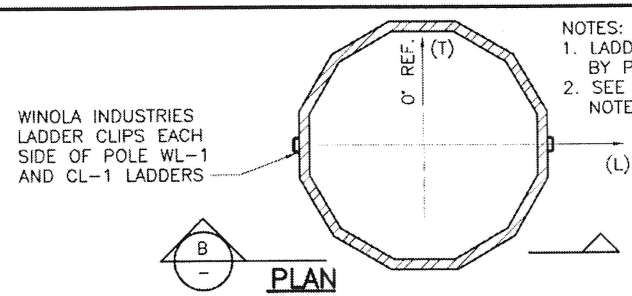

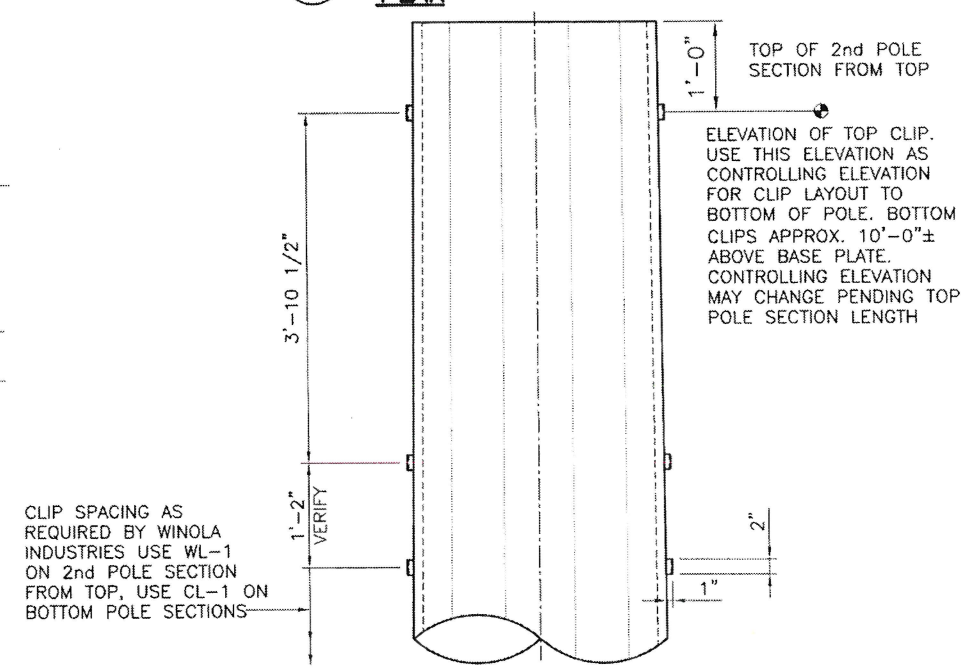

WINOLA IND. LADDER CLIP ATTACHMENT (B)

SCALE: 3/4"=1'-0"

ONE INCH AT FULL SIZE

REVISIONS			
REV	DATE	MF	
DR	CK	APP	
W.O. #			
DESCRIPTION			
C	04/26/11		
VWD			
W.O. #	1827201		

IRVING SEITOKU OGI
STATE OF WASHINGTON
23207
STRUCTURAL ENGINEER
PROFESSIONAL ENGINEER
Ogi 10/14/11

Seattle City Light

SIGNATURE		DATE
DR	: V. DONG	04/26/2011
CK	:	
DSGN	: J. Ogi	10/14/11
CK	:	
APP	: Irving S. Ogi	10/14/11

OVERHEAD TRANSMISSION
SOUTH TRANSMISSION

DUWAMISH TO CRESTON
LADDER DETAILS

SHEET 19 OF 23
CLASS S-19
DRAWING NO. TB-4196
SCALE AS NOTED
REV. NO. 0

I:\OU_293\VINH\NORMAN\DUWM TO CRESTON\TB-4196.dwg
dongy Oct/14/2011 6:22am

NOTES:

1. FOR GENERAL NOTES, SEE TB-4178.
2. △ INDICATES CONTROL POINT.
3. SEE TB-4194 FOR OTHER ATTACHMENTS NEAR POLE TOP.

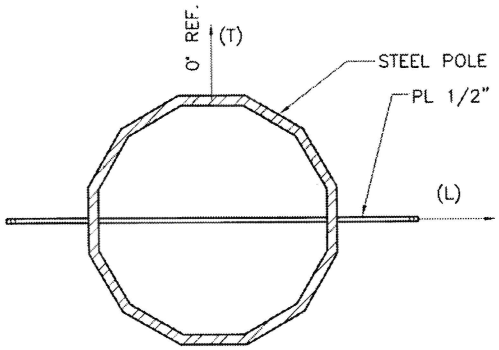

PLAN

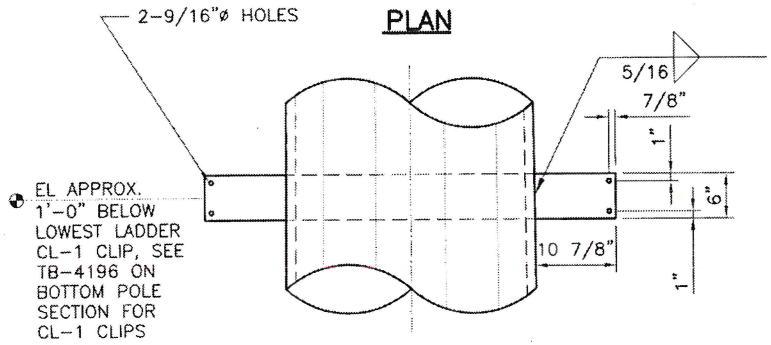

BOTTOM STAND OFF FOR SAFETY CABLE
N.T.S.

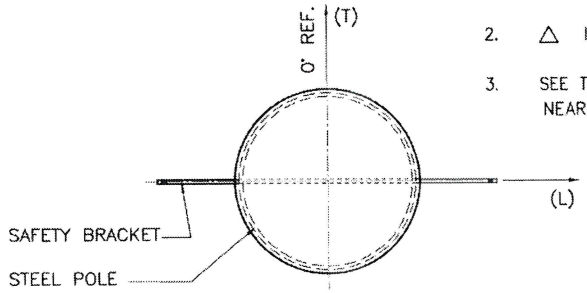

SECTIONAL PLAN A

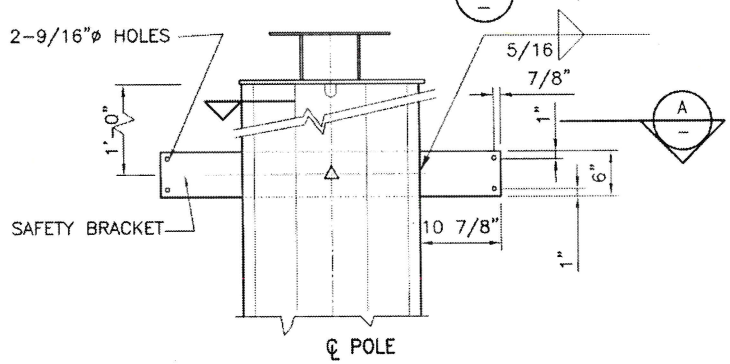

TOP STAND OFF FOR SAFETY CABLE
N.T.S.

REV	DATE	DR	W.O. #	DESCRIPTION
0	04/26/11	VWD	W.O. # 1827201	

ONE INCH AT FULL SIZE

IRVING SEITOKU DGI — STATE OF WASHINGTON — 23207 — STRUCTURAL ENGINEER — PROFESSIONAL ENGINEER — 10/14/11

Seattle City Light

SIGNATURE		DATE
DR	: V. DONG	04/26/2011
CK	:	
DSGN	:	10/14/11
CK	:	
APP	:	10/14/11

OVERHEAD TRANSMISSION
SOUTH TRANSMISSION
DUWAMISH TO CRESTON
230KV STEEL POLE
SAFETY CABLE ATTACHMENTS

SHEET 20 OF 23
CLASS S-20
DRAWING NO. TB-4197
SCALE AS NOTED
REV. NO. 0

I:\OU_293\VINH\NORMAN\DUWM TO CRESTON\TB-4197.dwg
dongv Oct/14/2011 6:22am

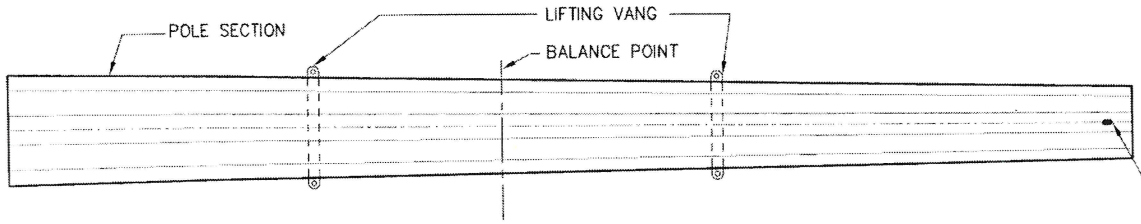

LIFTING VANG

N.T.S.

PROVIDE 2 LIFTING HOLES @ TOP OF EACH POLE SECTION FOR LIFTING POLE SECTION. PROVIDE HOLES IN ALL SECTIONS. DESIGN HOLES FOR LIFTING SECTION, PROVIDE REINFORCING AS NECESSARY. LIFTING HOLES DESIGNED BY MANUFACTURER.

NOTE:

SEE DRAWING TB-4178 FOR GENERAL NOTES.

NOTE FOR LIFTING VANG:
PROVIDE 2 LIFTING VANGS FOR EACH POLE SECTION CENTERED ABOUT THE SECTION BALANCE POINT FOR LIFTING THE POLE SECTION FROM A HORIZONTAL POSITION. DESIGN BY POLE MANUFACTURE.

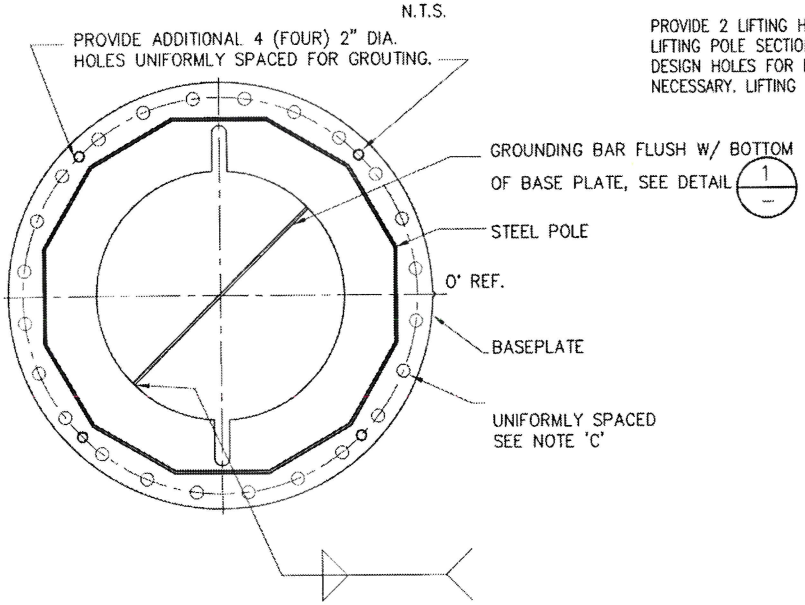

GROUT HOLES IN BASEPLATE

N.T.S.

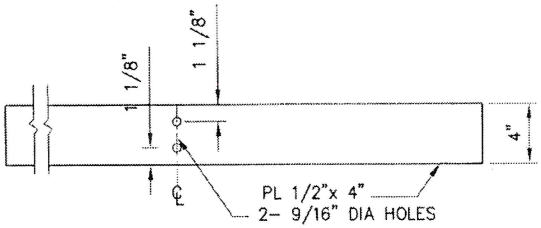

DETAIL 1/– GROUNDING BAR

N.T.S.

REVISIONS			
REV	DATE		MF
DR	CK		APP
W.O. #			
DESCRIPTION			
0	04/26/11		
VWD			
W.O. # 1827201			

IRVING SEITOKU OGI
STATE OF WASHINGTON
23207
STRUCTURAL ENGINEER
PROFESSIONAL ENGINEER
10/14/11

Seattle City Light

SIGNATURE		DATE
DR	: V. DONG	04/26/2011
CK	:	
DSGN	:	10/14/11
CK	:	
APP	:	10/14/11

OVERHEAD TRANSMISSION
SOUTH TRANSMISSION
DUWAMISH TO CRESTON
230KV STEEL POLES
POLE SECTION LIFTING VANGS

SHEET 21 OF 23
CLASS S-21
DRAWING NO. TB-4198
SCALE AS NOTED
REV. NO. 0

ONE INCH AT FULL SIZE

I:\OU_293\VINH\NORMAN\DUWM TO CRESTON\TB-4198.dwg
dongv Oct/14/2011 6:32am

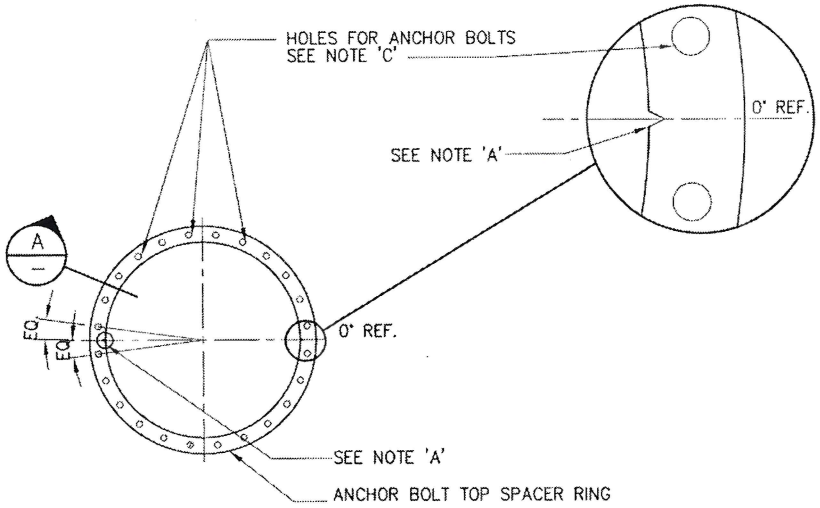

TOP RING OF ANCHOR BOLTS
N.T.S.
CAGE 'V' NOTCHES

NOTE:

SEE DRAWING TB-4178 FOR GENERAL NOTES.

NOTES FOR TOP RING:

A. PROVIDE TWO 'V' NOTCHS ON THE 0° & 180° REFERENCE LINE.

B. TOP SPACER RING SHALL BE 3/4" MIN. THICKNESS.

C. ANCHOR BOLTS SHALL NOT BE LOCATED ON THE '0°' REFERENCE LINE.

D. SET TOP SPACER RING 7 1/4" BELOW TOP OF ALL ANCHOR BOLTS .

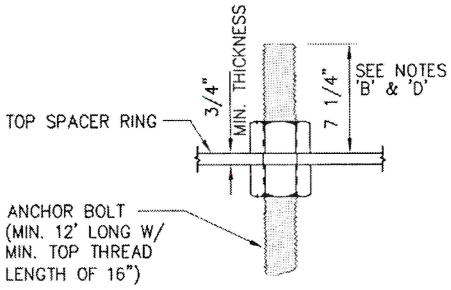

SECTION A
N.T.S.

I:\OU_293\VINH\NORMAN\DUWM TO CRESTON\TB-4199.dwg
dongv Oct/14/2011 6:32am

ONE INCH
AT FULL SIZE

REVISIONS

REV	DATE	MF
DR	CK	APP
W.O. #		

DESCRIPTION	
0	04/26/11
VWD	
W.O. # 1827201	

IRVING SEITO KUOGI
STATE OF WASHINGTON
23207
STRUCTURAL ENGINEER
PROFESSIONAL ENGINEER
10/14/11

Seattle City Light

SIGNATURE	DATE
DR : V. DONG	04/26/2011
CK :	
DSGN :	10/14/11
CK :	
APP :	10/14/11

OVERHEAD TRANSMISSION
SOUTH TRANSMISSION
DUWAMISH TO CRESTON
230KV STEEL POLES
TOP SPACER RING FOR ANCHOR BOLT CAGE

SHEET 22 OF 23
CLASS S-22
DRAWING NO. TB-4199
SCALE AS NOTED
REV. NO. 0

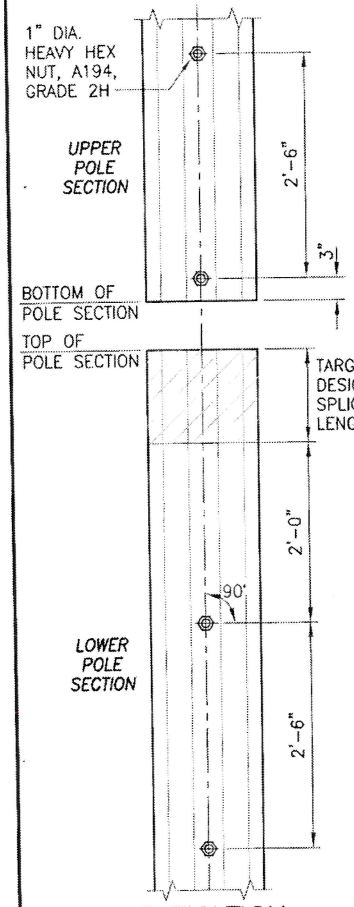

ELEVATION

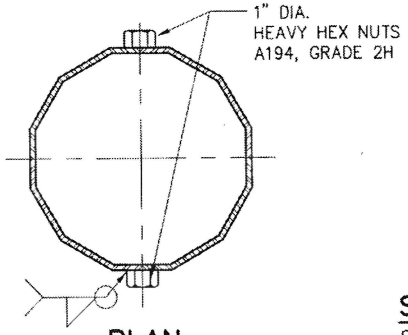

PLAN

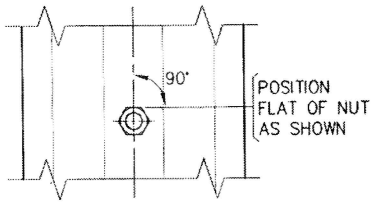

ELEVATION

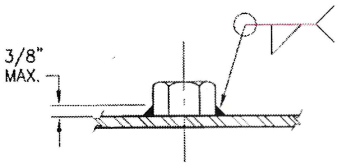

DETAIL– JACK NUT

STEEL POLE JACKING NUTS
N.T.S.

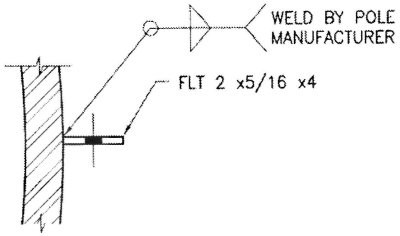

SECTION A – GROUNDING PLATE
SCALE: N.T.S.

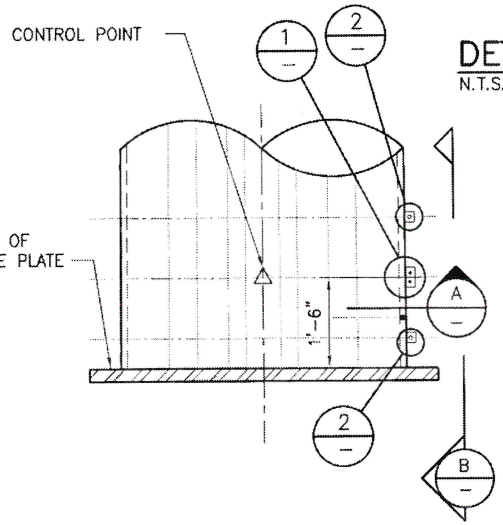

TYPICAL GROUNDING PAD– ITEM #12
N.T.S.

NOTES

1. SEE DRAWING TB-4178 FOR GENERAL NOTES.
2. PROVIDE JACKING NUTS AS DETAILED FOR EACH POLE SLIP JOINT TO FACILITATE THE USE OF SCL JACKING DEVICE.
3. PLACE GROUNDING PLATE ON 0' REF. LINE.

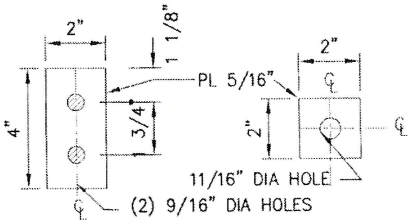

DETAIL 1 – GROUNDING PLATE
N.T.S.

DETAIL 2 – GROUNDING WIRE COVER BRACKET
N.T.S.

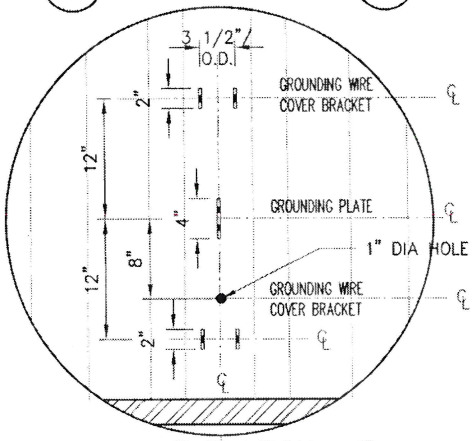

ELEVATION B
N.T.S.

REVISIONS				
REV	DATE	CK	APP	MF
DR				
W.O. #				
DESCRIPTION				
0	04/26/11			
VWD				
W.O. # 1827201				

ONE INCH
AT FULL SIZE

IRVING SEITOKU DONG
STATE OF WASHINGTON
23207
STRUCTURAL ENGINEER
PROFESSIONAL ENGINEER
10/14/11

Seattle City Light

SIGNATURE	DATE
DR : V. DONG	04/26/2011
CK :	
DSGN :	10/14/11
CK :	
APP :	10/14/11

OVERHEAD TRANSMISSION
SOUTH TRANSMISSION
DUWAMISH TO CRESTON
230KV STEEL POLES JACKING NUTS &
GROUNDING PAD

SHEET 23 OF 23
CLASS S-23
DRAWING NO. TB-4200
SCALE AS NOTED
REV. NO. 0

E:\OU_293\VINH\NORMAN\DUWA TO CRESTON\TB-4200.dwg
dongv Oct/14/2011 6:32am