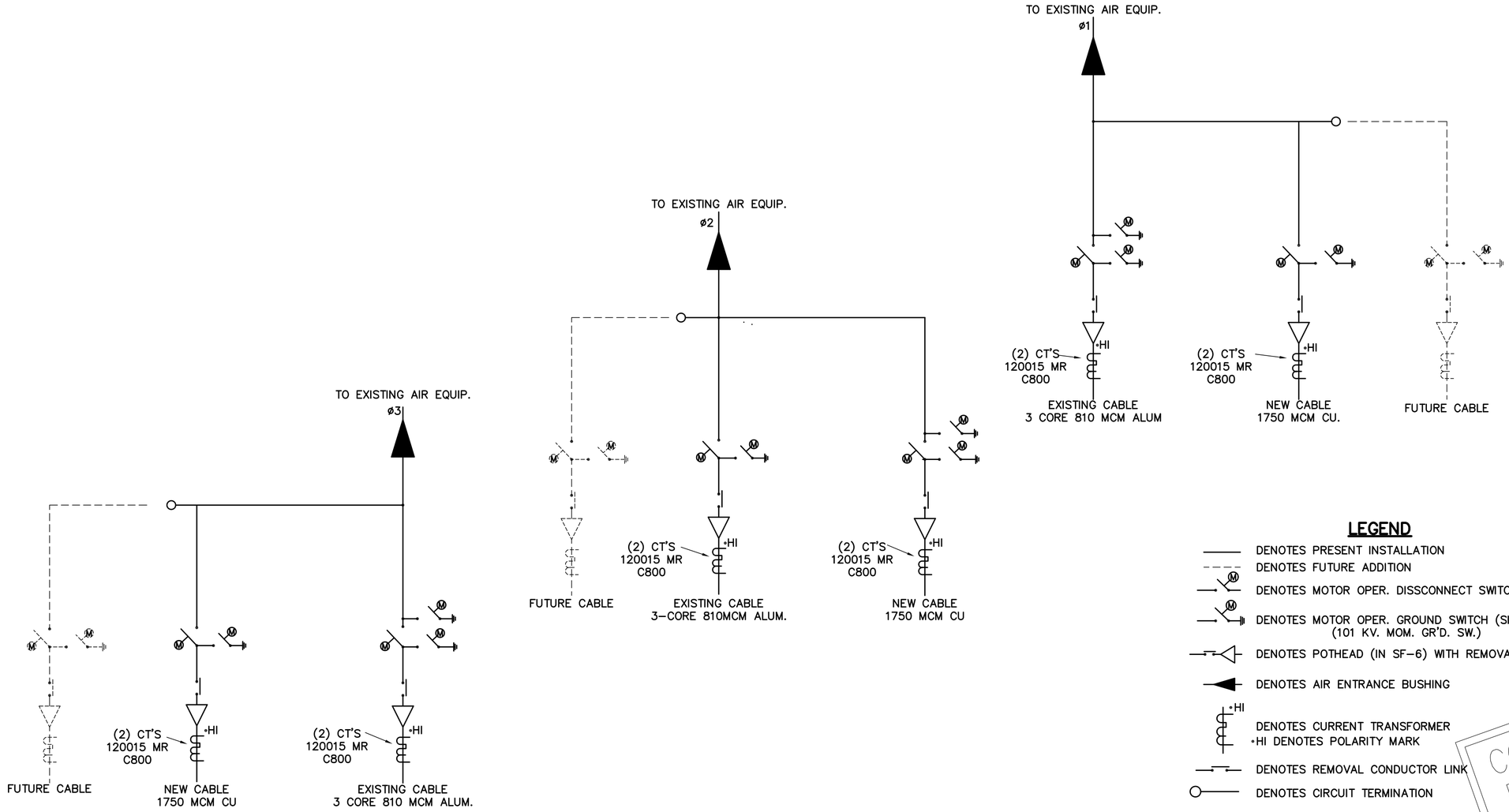

LEGEND

- DENOTES PRESENT INSTALLATION
- DENOTES FUTURE ADDITION
- DENOTES MOTOR OPER. DISSCONNECT SWITCH (SINGLE POLE OPER.) — ELECTRICALLY CONNECTED FOR 3-POLE SIMULTANEOUS OPERATION.
- DENOTES MOTOR OPER. GROUND SWITCH (SINGLE POLE OPER.) (101 KV. MOM. GR'D. SW.) — ELECTRICALLY CONNECTED FOR 3-POLE SIMULTANEOUS OPERATION.
- DENOTES POTHEAD (IN SF-6) WITH REMOVABLE CONDUCTOR LINK.
- DENOTES AIR ENTRANCE BUSHING
- DENOTES CURRENT TRANSFORMER
  *HI DENOTES POLARITY MARK
- DENOTES REMOVAL CONDUCTOR LINK
- DENOTES CIRCUIT TERMINATION

CONVERTED FROM PAPER TO C.A.D.
* NOT CHECKED *

FOR GENERAL ARRANGEMENT NOTES, LEGEND AND LIST OF DRAWINGS SEE DWG. 425-335

UNION ST

This drawing is the property of Gould Inc. and contains proprietary and confidential information wich must not be duplicated, used or disclosed other than as expressly authorized by Gould.

3-PHASE WIRING DIAGRAM
115 KV. CABLE ADDITION TO UNION STREET SUBSTATION (2000 AMP BUS)
THE CITY OF SEATTLE

GOULD
Gould Inc., Power Systems Division
P.O. Box 98, Greensburg, Pa. 15601
Telephone (412) 834-3300
Manufacturer of I-T-E Equipment

Scale	=12"			
Assy. Dwg.				
Group	Dwn.	Chkd.	Appd.	Rev.
B	RHS	JB	JOD	01

425-333

CONVERTED TO CAD BY C.I.T. QC: D.W.H. DATE: 06/12/97 PHONE (206) 467-6832 CONTACT: IVETTE DAMISH

FOR ORIGINAL APPROVAL SIGNATURES/INITIALS AND STAMPS, SEE REV. 0 AND PREVIOUS REV. MICROFILMS.

REV.	DESCRIPTION AND DATE	
02	JUNE 3, 1979	RMC

45-A26300

MF

POLYBLU. A&B SMITH CO. PGH, PA

MD-2931

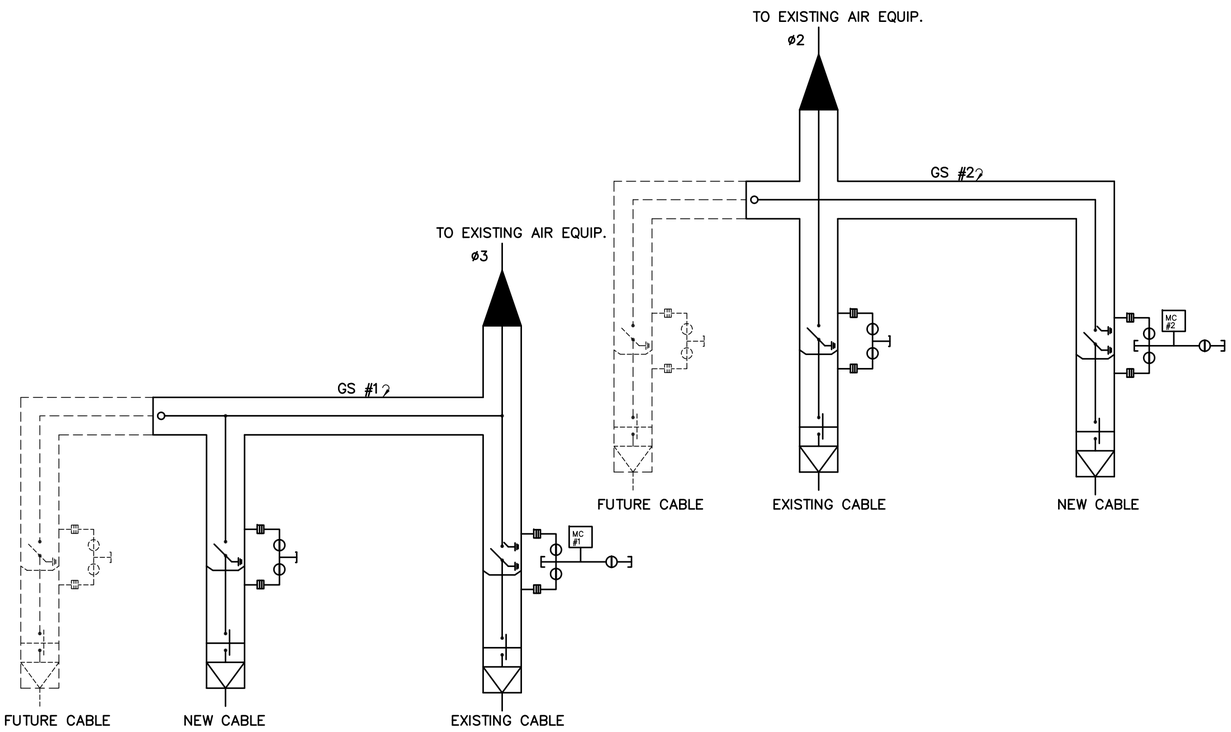

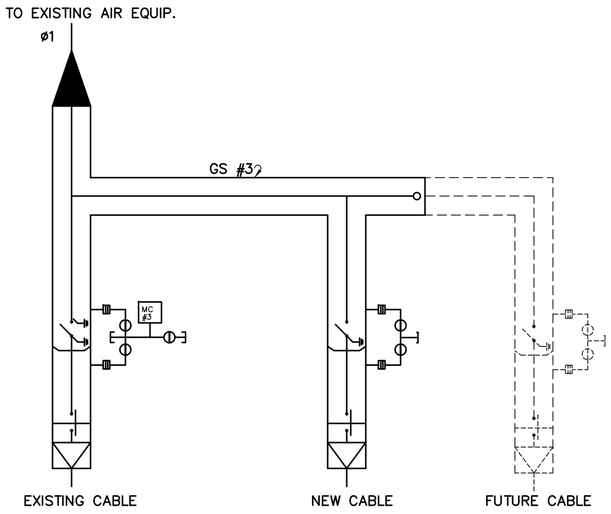

LEGEND (NOMINAL 30PSIG)

- DENOTES PRESENT INSTALLATION
- DENOTES FUTURE ADDITION
- DENOTES AIR ENTRANCE BUSHING
- DENOTES VALVE–NORMALLY OPEN
- DENOTES VALVE–NORMALLY CLOSED
- DENOTES SF–6 GAS FILTER
- DENOTES EVACUATE OR FILL CAP
- DENOTES TERMINATOR
- DENOTES POTHEAD HOUSING (POTHEAD IN SF–6) WITH REMOVABLE CONDUCTOR LINK
- MC # — DENOTES MONITORING CABINET (NUMBER OR IDENTIFICATION)
- GS# — DENOTES GAS SYSTEM (NUMBER OR IDENTIFICATION)
- DENOTES BARRIER INSULATOR (DISC TYPE)
- DENOTES REMOVABLE CONDUCTOR LINK

CONVERTED FROM PAPER TO C.A.D.
* NOT CHECKED *

FOR GENERAL ARRANGEMENT NOTES, LEGEND AND LIST OF DRAWINGS SEE DWG.#425–335

UNION ST

REV.	DESCRIPTION & DATE 1–10–80
01	APR. 16,1979
	REV. PER. APP'D. PRINTS OF 6–26–79 J.B.
02	JULY 3,1979 PAC

45–A26300

This drawing is the property of Gould Inc. and contains proprietary and confidential information which must not be duplicated, used, or disclosed other than as expressly authorized by Gould.

3-PHASE GAS SYSTEM SCHEMATIC
115KV. CABLE ADDITION TO UNION STREET SUBSTATION. (2000AMP BUS)
THE CITY OF SEATTLE

GOULD
Gould Inc., Power Systems Division
P.O. Box 98. Greensburg, Pa. 15601
Telephone (412) 834–3300
Manufacturer of I–T–E Equipment

FOR ORIGINAL APPROVAL SIGNATURES/INITIALS AND STAMPS, SEE REV. 0 AND PREVIOUS REV. MICROFILMS.

CONVERTED TO CAD BY C.I.T. QC: M.H. DATE: 6/12/97 PHONE (206) 467–6832 CONTACT: IVETTE DAMISH

Scale	1/4"=1'2"			
Assy Dwg				
Group	Dwn	Chkd	Appd	
B	RHS	JB	JOD	425–334

Rev 02

DWG & REV NO. 425–334 –

MD-2932

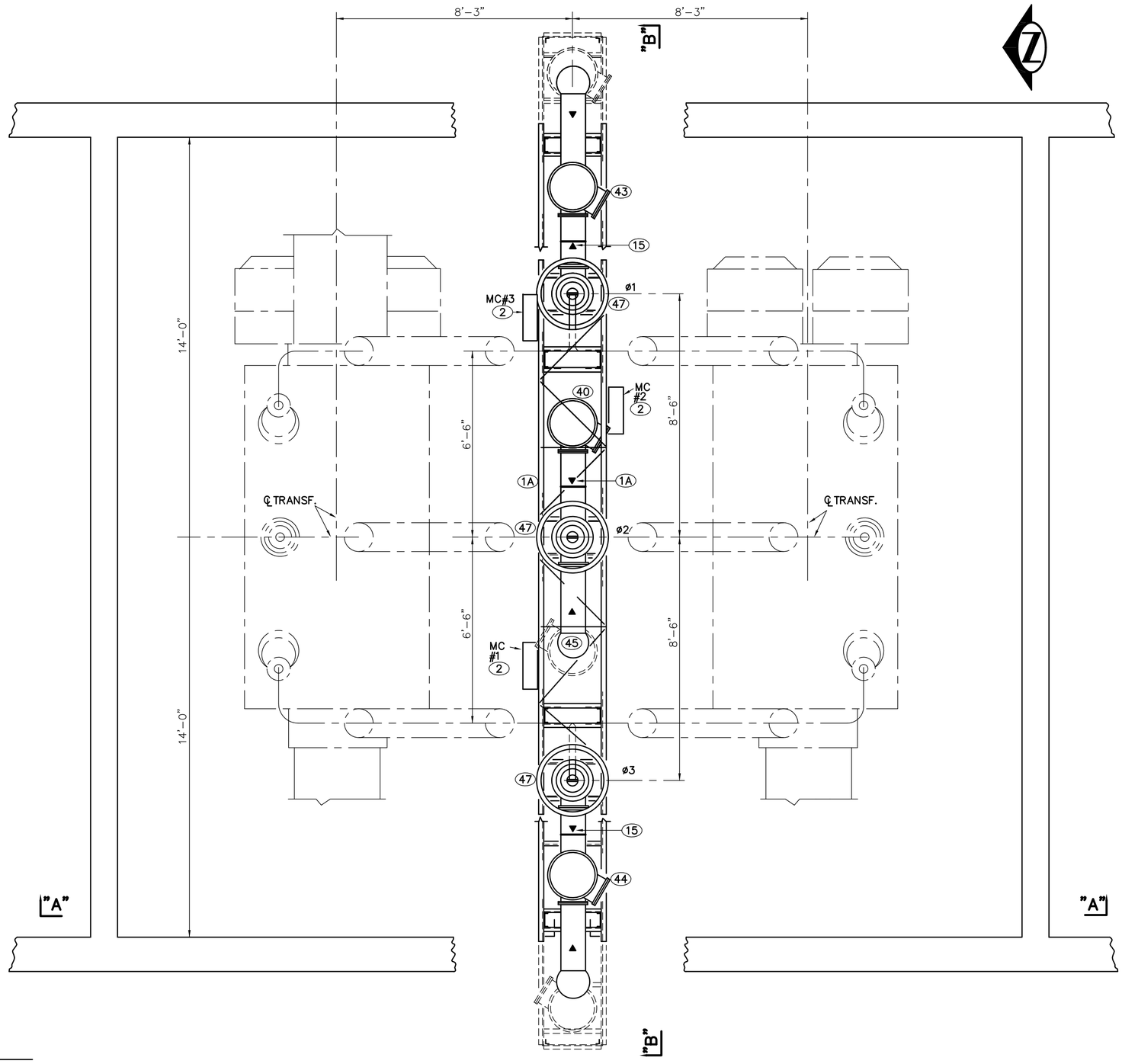

LEGEND

- DENOTES PRESENT INSTALLATION
- DENOTES EXISTING EQUIPMENT
- DENOTES FUTURE ADDITION
- DENOTES LOCATION OF PLUG CONNECTORS
- DENOTES LOCATION OF GROUND POINT
- DENOTES SWITCH OPERATOR CONTROL PIPE
- DENOTES FIELD WELD
- DENOTES ITEM NUMBERS, REFER TO MAIN BILL OF MATERIAL ALL ITEM No'S PRECEDED BY THE LETTER [H]

NOTES

FOR SECTIONAL VIEWS SEE DWG'S. #425-336, 425-337 & 425-338
FOR MAIN BILL OF MATERIAL SEE DWG. #182-237 (MA-1395,-1396,-1397&-1398)
FOR WIRING DIAGRAM SEE DWG. #425-333
FOR GAS SYSTEM SCHEMATIC SEE DWG. #425-334
FOR ANCHOR BOLT PLAN SEE DWG. #425-339

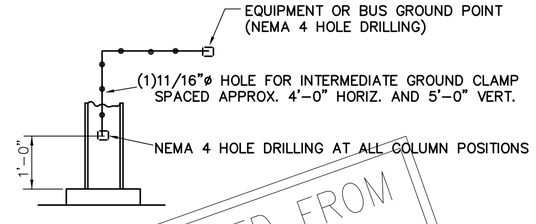

TYPICAL GROUND CONNECTIONS
(ALL CONNECTORS AND CABLE BY CUSTOMER)

CONVERTED FROM PAPER TO C.A.D.
* NOT CHECKED *

FOR ORIGINAL APPROVAL SIGNATURES/INITIALS AND STAMPS, SEE REV. 0 AND PREVIOUS REV. MICROFILMS.

CONVERTED
TO CAD
BY C.I.T.
QC: D.S.O.
DATE: 06/13/97
PHONE (206) 467-6832
CONTACT: IVETTE DAMISH

UNION ST.

This drawing is the property of Gould Inc. and contains proprietary and confidential information which must not be duplicated, used, or disclosed other than as expressly authorized. by Gould.

GENERAL ARRANGEMENT
115KV. CABLE ADDITION TO UNION STREET SUBSTATION.(2000 AMP BUS)
THE CITY OF SEATTLE

GOULD
Gould Inc., Power Division
P.O. Box 98, Greensburg, Pa. 15601
Telephone (412)834-3300
Manufacturer of I-T-E Equipment

Scale	1/2"=1'-0"				
Assy Dwg					
Group	Dwn	Chkd	Appd		REV
B	RHS	JB	JOD	425-335	03

DWG. & REV. NO. | 425-335 | 03

03	AUG. 15, 1979

MF

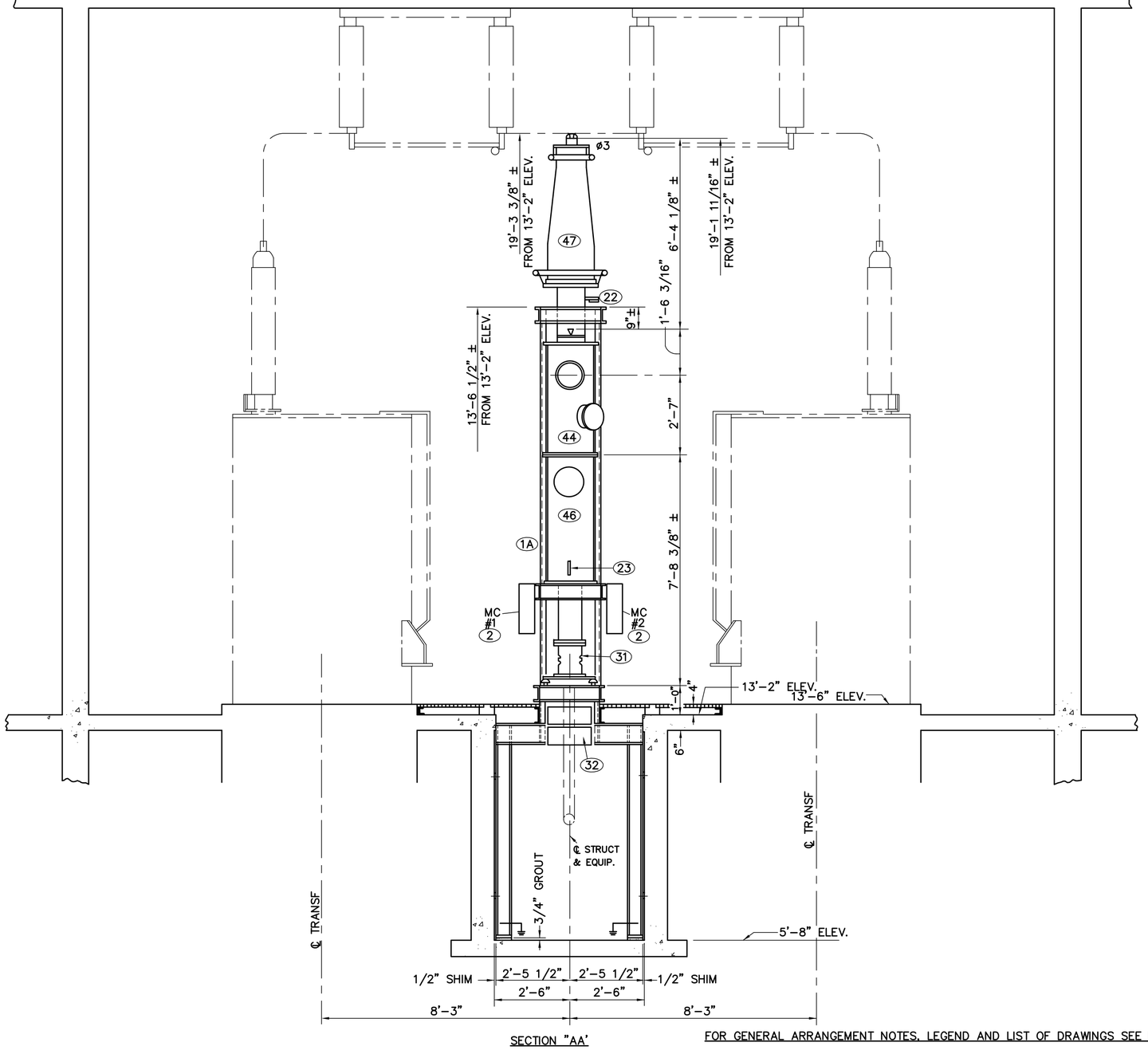

SECTION "AA'

FOR GENERAL ARRANGEMENT NOTES, LEGEND AND LIST OF DRAWINGS SEE DWG.# 425-335

CONVERTED FROM PAPER TO C.A.D.
* NOT CHECKED *

UNION ST

This drawing is the property of Gould Inbc. and contains proprietary and confidential information which must not be duplicated, used or disclosed other than as expressly authorized by Gould.

GENERAL ARRANGEMENT
115KV. CABLE ADDITION TO UNION STREET SUBSTATION (2000 AMP BUS)
THE CITY OF SEATTLE

GOULD
Gould Inc., Power Systems Division
P.O. Box 98, Greensburg, Pa. 15601
Telephone (412) 834-3300
Manufacturer of I-T-E Equipment

Scale	1/2"=12"			
Assy. Dwg.				
Group	Dwn.	Chkd.	Appd.	Rev.
B	RMS	JB	JOD	02

425-336

DWG. & REV. NO. 425-336 —

CONVERTED TO CAD BY C.I.T.
QC: D.W.H.
DATE: 06/12/97
PHONE (206) 467-6832
CONTACT: IVETTE DAMISH

FOR ORIGINAL APPROVAL SIGNATURES/INITIALS AND STAMPS, SEE REV. 0 AND PREVIOUS REV. MICROFILMS.

REV.	DESCRIPTION AND DATE 1-10-80	
MF 02	JUNE 5, 1979	RMC

45-A26300

POLYBLU. A&B SMITH CO. PGH, PA
MD-2934

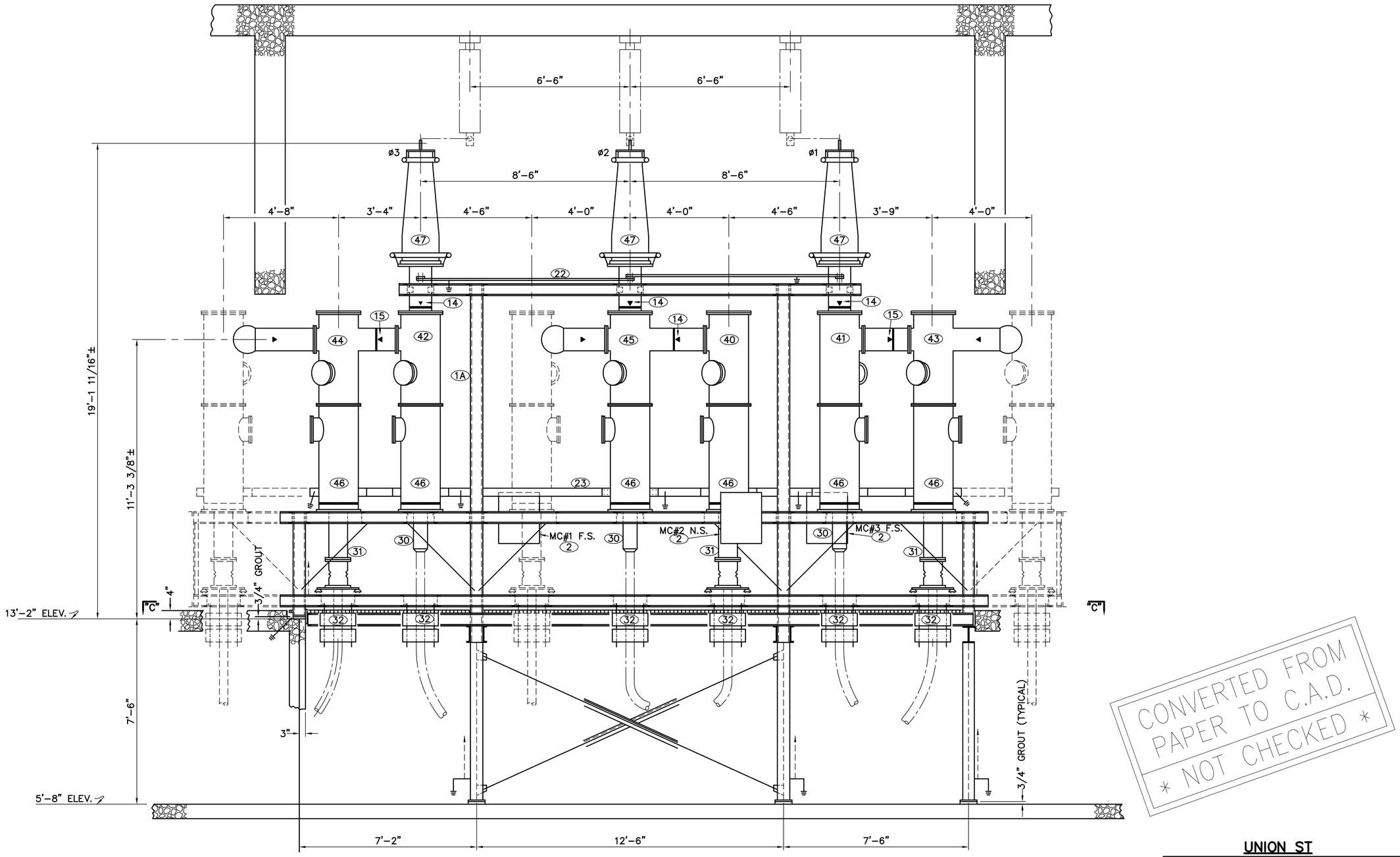

SECTION "BB"

FOR GENERAL ARRANGEMENT NOTES, LEGEND AND LIST OF DRAWINGS SEE DWG. #425–335

CONVERTED FROM PAPER TO C.A.D.
* NOT CHECKED *

45–A26300

01	APR. 23, 1979	G.A. MARK No's. ADDED REV. PER APP'D PRINTS OF 6–26–79	JB
02	JUNE 5, 1979	MC#3 F.S. RELOCATED. (2) J.B.	RAC
03	AUG. 15, 1979		RAC

MF

FOR ORIGINAL APPROVAL SIGNATURES/INITIALS AND STAMPS, SEE REV. 0 AND PREVIOUS REV. MICROFILMS.

CONVERTED
TO CAD
BY C.I.T.
QC: M.H.
DATE: 6/6/97
PHONE (206) 467–6832
CONTACT: IVETTE DAMISH

UNION ST

This drawing is the property of Gould Inc. and contains proprietary and confidential information which must not be duplicated, used, or disclosed other than as expressly authorized by Gould.

GENERAL ARRANGEMENT
115KV. CABLE ADDITION TO UNION STREET SUBSTATION. (2000 AMP BUS)
THE CITY OF SEATTLE

GOULD
Gould Inc., Power Systems Division
P.O. Box 98, Greensburg, Pa. 15601
Telephone (412) 834–3300
Manufacturer of I–T–E Equipment

Scale	1/2" = 12"				
Assy Dwg					
Group	Dwn	Chkd	Appd	425–337	Rev
B	RHS	JB	JOD		03

DWG. & REV. NO. 425–337 –

MD-2935

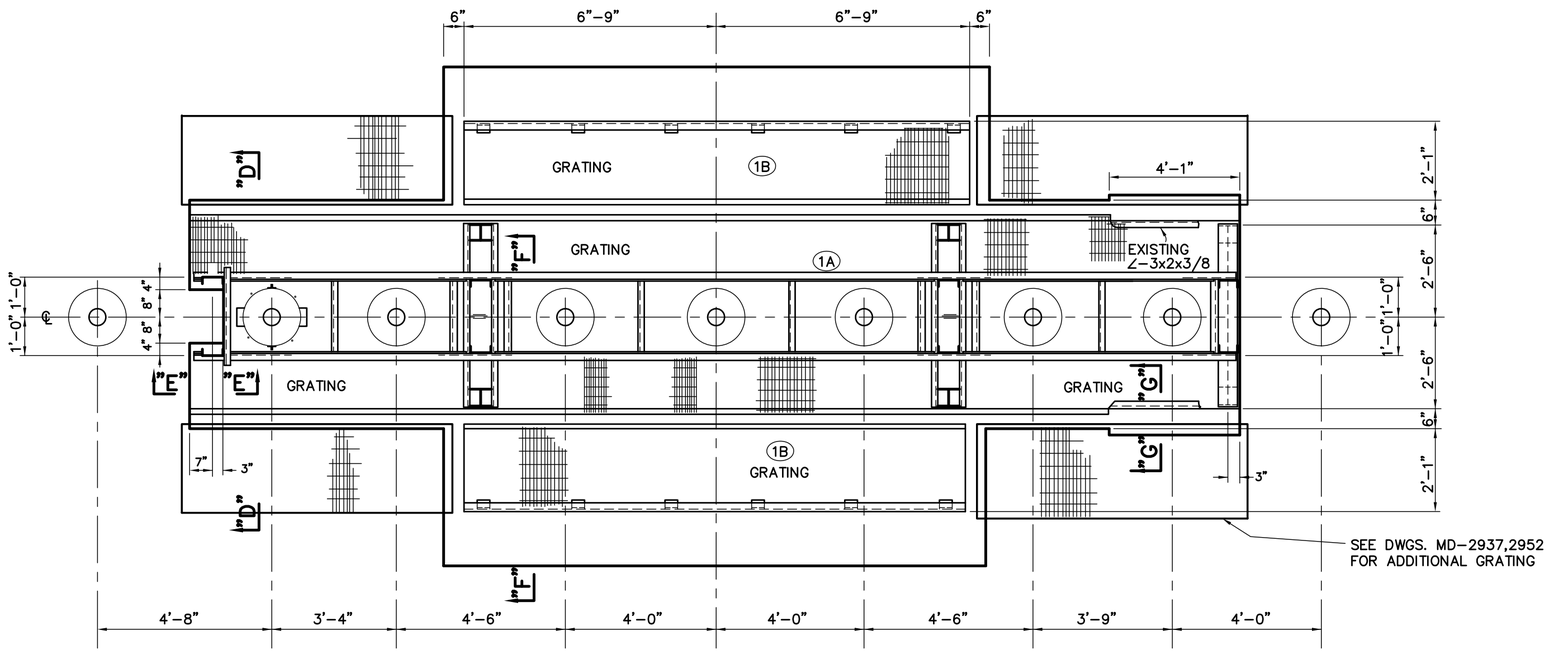

SECTION "CC"

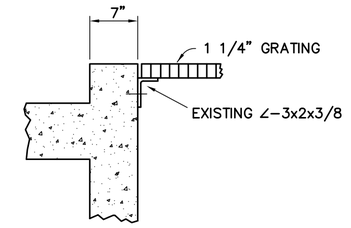

SECTION "GG" ENLARGED

SCALE 1 1/2"=12"

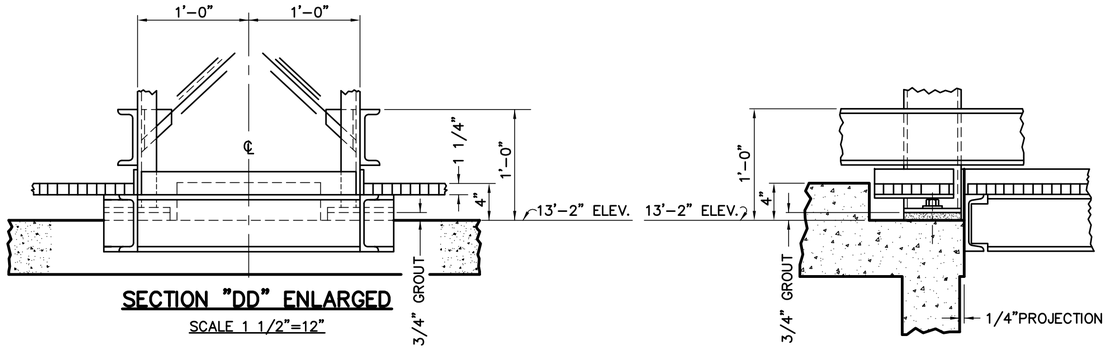

SECTION "DD" ENLARGED

SCALE 1 1/2"=12"

SECTION "EE" ENLARGED

SCALE 1 1/2"=12"

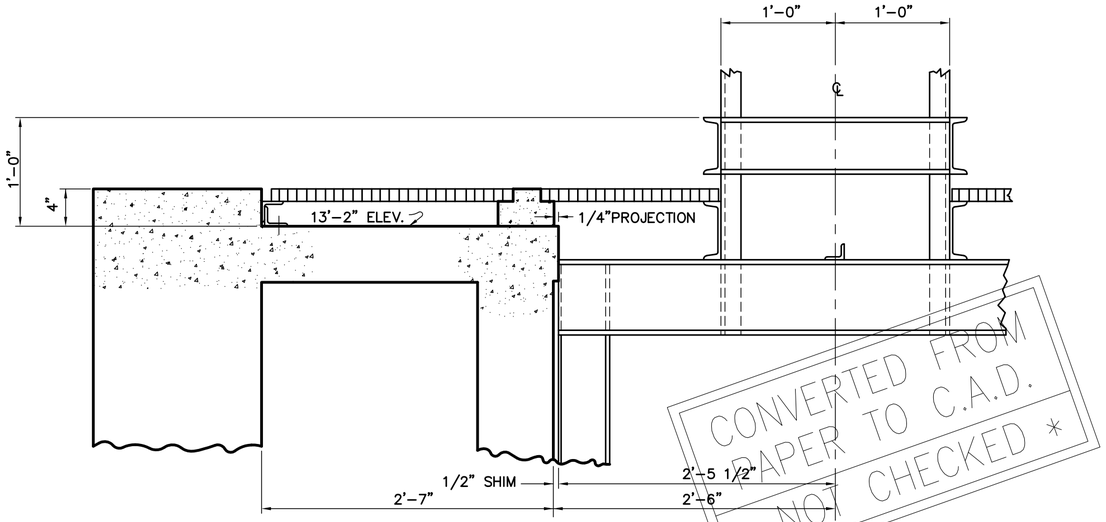

SECTION "FF" ENLARGED

SCALE 1 1/2"=12"

CONVERTED FROM PAPER TO C.A.D. * NOT CHECKED *

UNION ST

FOR GENERAL ARRANGEMENT NOTES, LEGEND AND LIST OF DRAWINGS SEE DWG.# 425–335

This drawing is the property of Gould Inc. and contains proprietary and confidential information which must not be duplicated, used, or disclosed other than as expressly authorized by Gould.

GENERAL ARRANGEMENT
115 KV. CABLE ADDITION TO UNION STREET SUBSTATION. (2000 AMP BUS)
THE CITY OF SEATTLE

GOULD
Gould Inc., Power Systems Division
P.O. Box 98, Greensburg, Pa. 15601
Telephone (412) 834–3300
Manufacturer of I–T–E Equipment

Scale	1/2"=12"				
Assy Dwg.					
Group	Dwn	Chkd	Appd	425-338	Rev
B	RHS	JB	Jop		03

DWG. & REV. NO. 425–338 –

REV.	DESCRIPTION AND DATE	
3	1–7–81	MF
	M.HANSEN	LSUN
	ADDED GRATING NOTE	

1–10–80

45–A26300

CONVERTED TO CAD BY C.I.T. QC: T.G. DATE: 06/04/97 PHONE (206) 467–6832 CONTACT: IVETTE DAMISH

FOR ORIGINAL APPROVAL SIGNATURES/INITIALS AND STAMPS, SEE REV. 0 AND PREVIOUS REV. MICROFILMS.

SEE MICROFILM FOR SIGNATURES

MD-2936

LEGEND

——— DENOTES PRESENT INSTALLATION
- - - - DENOTES FUTURE ADDITION
* DENOTES LOCATION OF GROUND CONNECTION

NOTES

FOR PIER LOADING TABULATION SEE DWG. #320-162

ALL FOUNDATION PIERS AND/OR SLABS MUST BE LEVEL WITHIN 1/4"

ALL STRUCTURES, CENTERLINE TO CENTERLINE, MUST BE WITHIN 1/4" OF TRUE LOCATION SHOWN.

FOR GENERAL ARRANGEMENT, NOTES AND LIST OF DRAWINGS SEE DWG. #425-335.

REFERENCES

D-26664 UNION ST. SUB., MA-US-BR CABLE TAP TUNNEL NO. 2 MODIFICATIONS

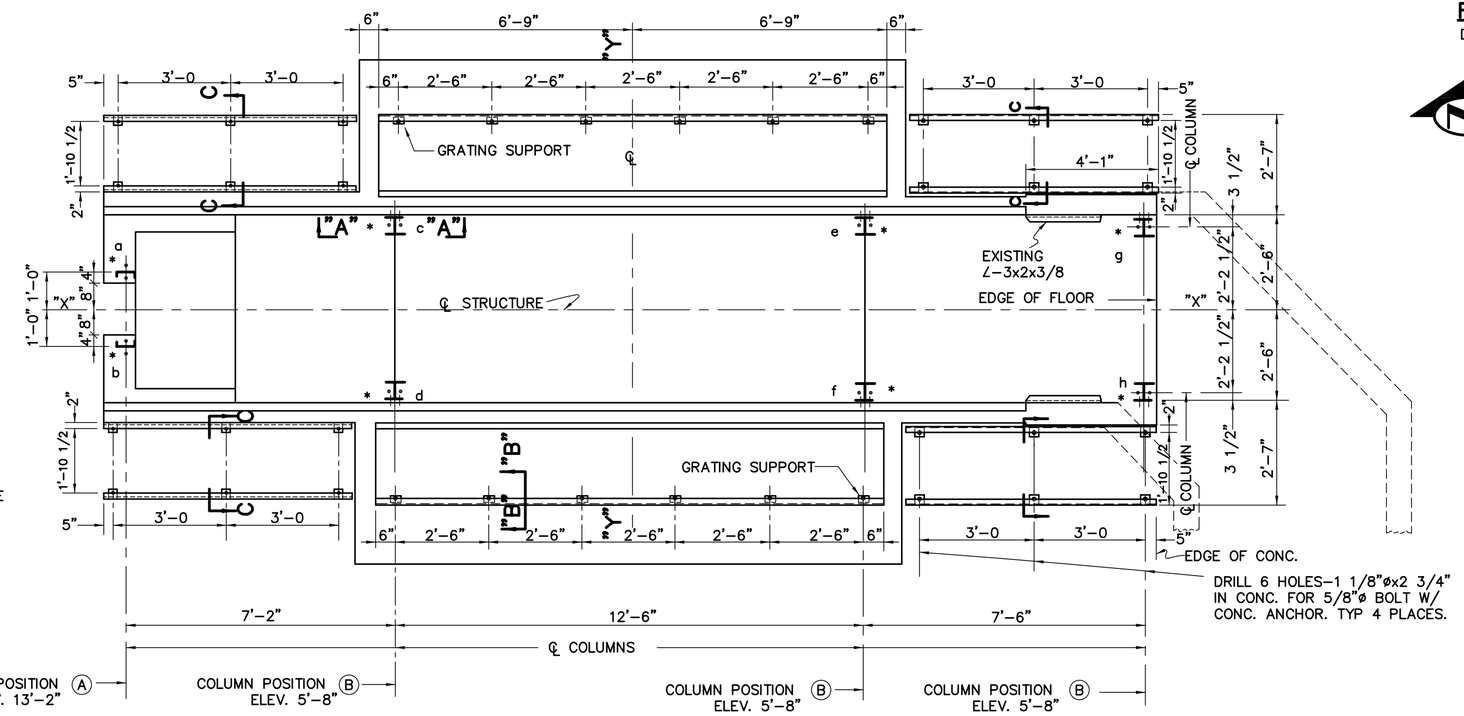

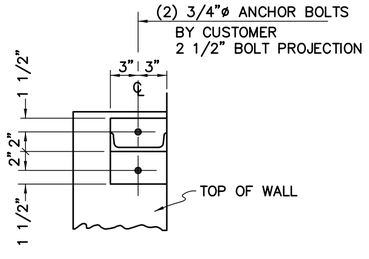

TYPICAL ANCHOR BOLT SETTING FOR COLUMN POSITION Ⓐ ELEV. 13'-2"

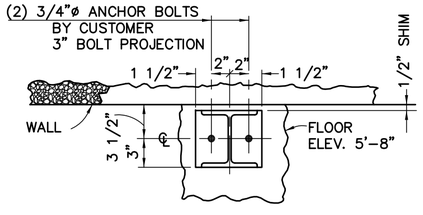

TYPICAL ANCHOR BOLT SETTING FOR COLUMN POSITIONS Ⓑ ELEV. 5'-8"

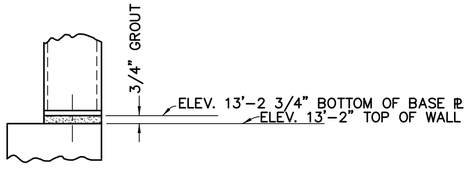

TYPICAL ANCHOR BOLT SETTING FOR COLUMN POSITION Ⓐ ELEV. 13'-2"

PLAN

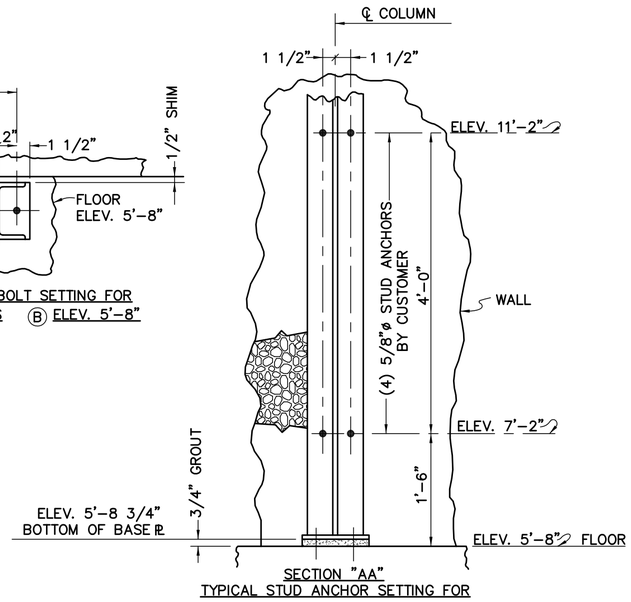

SECTION "AA"
TYPICAL STUD ANCHOR SETTING FOR COLUMN POSITIONS Ⓑ TYPICAL (6) PLACES

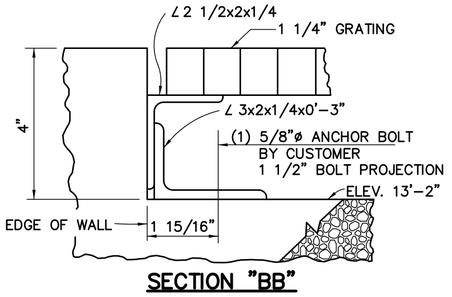

SECTION "BB"
TYPICAL ANCHOR BOLT SETTING FOR GRATING SUPPORT AT TRANSFORMERS TYPICAL (12) PLACES

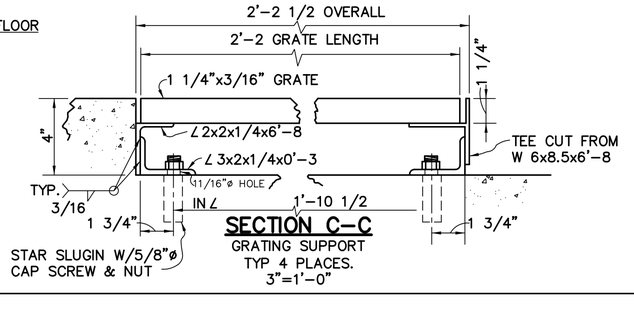

SECTION C-C
GRATING SUPPORT TYP 4 PLACES.
3"=1'-0"

CONVERTED FROM PAPER TO C.A.D.
* NOT CHECKED *

CONVERTED TO CAD BY C.I.T.
QC: D.W.H.
DATE: 06/13/97
PHONE (206) 467-6832
CONTACT: IVETTE DAMISH

FOR ORIGINAL APPROVAL SIGNATURES/INITIALS AND STAMPS, SEE REV. 0 AND PREVIOUS REV. MICROFILMS.

UNION ST.

This drawing is the property of Gould Inc. and contains proprietary and confidential information which must not be duplicated, used, or disclosed other than as expressly authorized by Gould.

ANCHOR BOLT PLAN AND TYPICAL ANCHOR BOLT SETTINGS FOR 115KV. CABLE ADDITION TO UNION STREET SUBSTATION. THE CITY OF SEATTLE

GOULD
Gould Inc., Power Systems Division
P.O. Box 98, Greensburg, Pa. 15601
Telephone (412) 834-3300
Manufacturer of I-T-E Equipment

Scale	=12"		
Assy Dwg			
Group	Dwn	Chkd	Appd
B	RHS	JB	Jop

425-339 Rev 03

POLYBLU. A & B SMITH CO. PGH. PA.

MD-2937

REV.	DESCRIPTION AND DATE		
03	CJC 1-10-80	G.T.H. 12-9-80	MF GJD
	ADDED END GRATE ANCHORS		

45-A26300

I
425-339
DWG. & REV. NO.

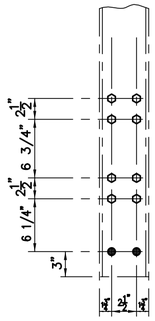

○ DENOTES EXISTING BOLTS
● DENOTES 11/16" ø FIELD DRILLED HOLES

1/4" THK. FILL WASHER

TYPICAL FOR ALL X BRACING

SECTION "AA" SHOWING TYPICAL FIELD DRILLING REQ'D. FOR EXISTING 6"[COLUMNS ~ ITEMS# 31 & 32

ALL LACING~L-1 3/4X1 3/4X3/16

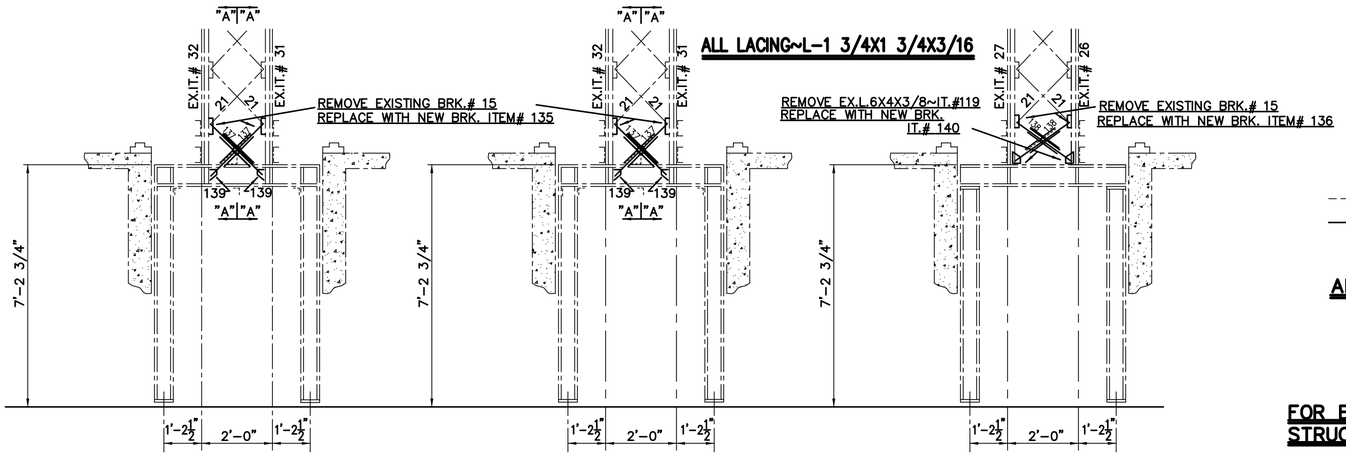

SECTION "HH" FROM DWG'S 425-915 & 425-916

SECTION "JJ" FROM DWG'S 425-915 & 425-916

SECTION "KK" FROM DWG'S 425-915 & 425-916

---------- DENOTES EXISTING STEEL
———————— DENOTES NEW STEEL

ALL ITEM NO'S PRECEDED BY THE LETTERS "YE"

FOR ERECTION PLANS OF EXISTING STRUCTURE ~ SEE DWG'S. 425-915-TO-425-919(INCL.) (MD-2949-TO-MD-2953INCL.)

S.O. 45A 26300~IT.#1A(PART)

REV.	DESCRIPTION & DATE 6-23-80
01	MAY 9, 1980

MF POLYBLU. A&B SMITH CO. PGH. PA LT1424.579

CONVERTED FROM PAPER TO C.A.D.
* NOT CHECKED *

THIS DRAWING IS THE PROPERTY OF GOULD-BROWN BOVERI AND CONTAINS PROPRIETARY AND CONFIDENTIAL INFORMATION WHICH MUST NOT BE DUPLICATED, USED, OR DISCLOSED OTHER THAN AS EXPRESSLY AUTHORIZED BY GOULD-BROWN BOVERI.

ERECTION PLAN FOR ADDING BRACING
TO EXISTING 115 KV. CABLE ADD. TO UNION STREET
SUBSTATION (2000 AMP.BUS)
THE CITY OF SEATTLE

GOULD-BROWN BOVERI
POWER SYSTEMS DIVISION
P.O.BOX 88, GREENSBURG, PA. 15601
TELEPHONE (412)834-3300
MANUFACTURER OF I-T-E EQUIPMENT

SCALE	=12"	TOLERANCE UNLESS NOTED FRACTIONAL DECIMAL			
ASSY DWG					REV
GROUP	DWN	CHKD	APPD	426-418	01
B	J.E.S	RWG	PHW		

DWG. & REV. NO. 426-418 01

MD-2938

REVISIONS

REV	DATE	APP
DR	CK	
W.O.#	DESCRIPTION	

CAD CONVERSION VENDOR: SARA SYSTEMS, INC.TO Q-CAD,INC.
CONTACT PERSON: LISA DORSEY
DATE: MAY. 1997
TEL: 1-800-700-3025
ADDRESS: 7101 NORTH MESA,STE.165
EL PASO,TX 79912

FOR ORIGINAL APPROVAL SIGNATURES/ INITIALS AND STAMPS, SEE REV 0 AND PREVIOUS REV.

ENDORSEMENTS

SIGNATURE	DATE
DR :	
CK :	
DSGN:	
CK :	

CITY OF SEATTLE
CITY LIGHT DEPARTMENT

APPROVED FOR CITY LIGHT DEPARTMENT

DATE

ERECTION PLAN FOR ADDING BRACING
TO EXISTING 115 KV. CABLE ADD. TO UNION STREET
SUBSTATION (2000 AMP.BUS)
THE CITY OF SEATTLE

SHEET OF
CLASS.
DRAWING NO. MD-2938
SCALE =12" REV. NO. 01

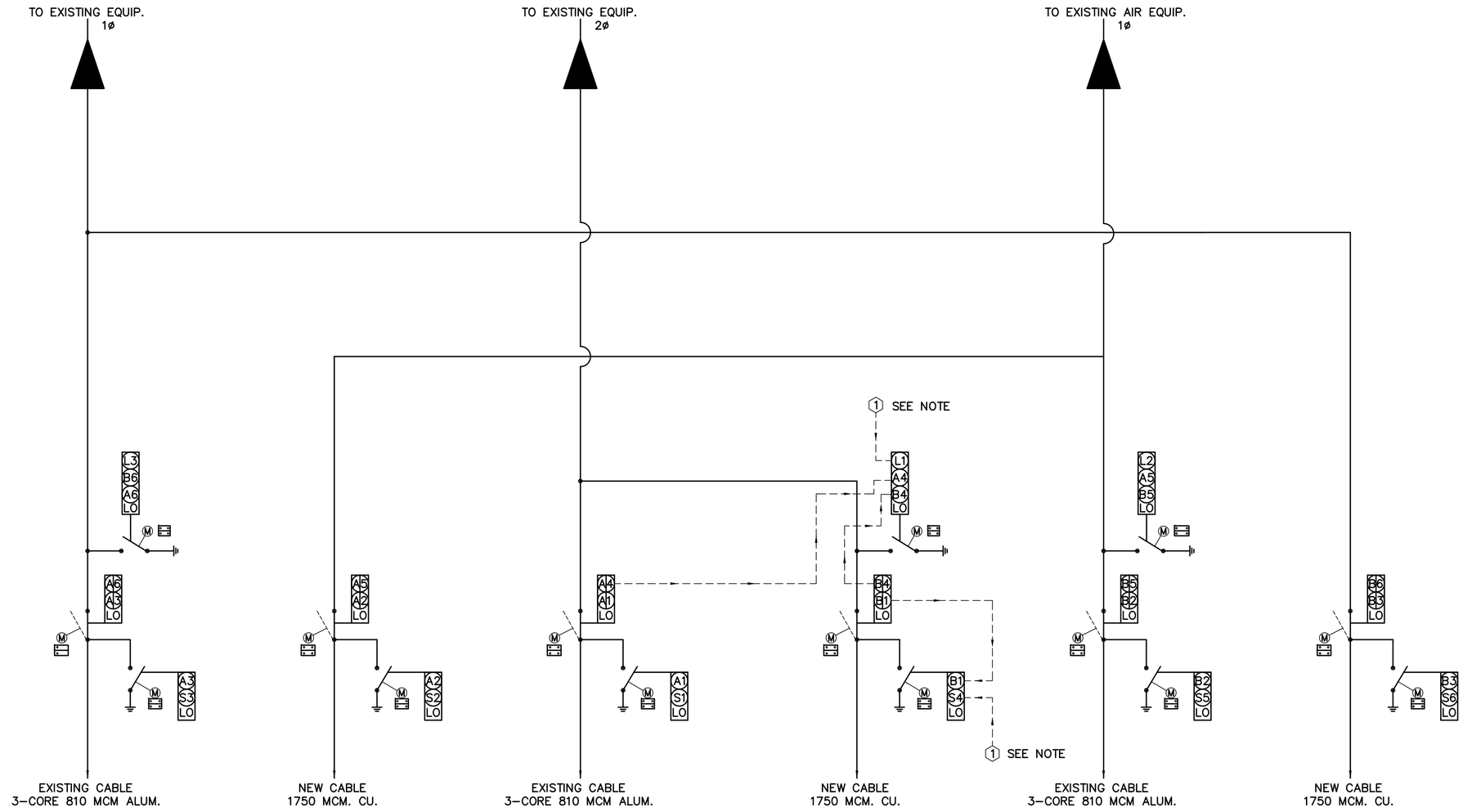

LEGEND

DENOTES PRESENT INSTALLATION

DENOTES MOTOR OPERATED DISCONNECT SWITCH (SINGLE POLE OPER.) ELECTRICALLY CONNECTED FOR 3–POLE SIMULTANEOUS OPERATION.

DENOTES MOTOR OPERATED GROUND SWITCH (SINGLE POLE OPER.) (101 KA. MOM. GR'D. SW.) ELECTRICALLY CONNECTED FOR 3–POLE SIMULTANEOUS OPERATION.

DENOTES AIR ENTRANCE BUSHING

DENOTES POWER SWITCH (MOTOR OPERATOR) EACH MOTOR IN THE SYSTEM IS TO BE COMPLETE WITH CONTACTS THAT DISCONNECTS THE MOTOR OPERATING CIRCUIT WHEN THE INTERLOCK BOLT IS EXTENDED TO LOCK THE SWITCH OPEN.

LO KEY IS RELEASED WHEN DEVISE IS LOCKED OPEN

LO KEY IS RETAINED IN LOCK

NOTES

1. AVAILABILITY OF THIS KEY MUST ASSURE THAT CABLE SOURCE IS DISCONNECTED. (TYPICAL ALL SIX (6) CABLES.)
2. AVAILABILITY OF THIS KEY MUST ASSURE THAT THERE WILL BE NO FEED BACK. (TYPICAL ALL THREE (3) PHASES.)

*ALL KEYS ARE REMOVABLE WHEN THE INTERLOCK BOLT IS EXTENDED.

FOR GENERAL ARRANGEMENT NOTES, LEGEND AND LIST OF DRAWINGS SEE DWG. #425–335.
FOR INTERLOCK MOUNTING INFORMATION SEE DWG. #320–258

CONVERTED FROM PAPER TO C.A.D. * NOT CHECKED *

45–A49797
45–A26300

REV.	DESCRIPTION & DATE	
02	JULY 3, 1979	RAL

MF

This drawing is the property of Gould Inc. and contains proprietary and confidential information which must not be duplicated, used, or disclosed other than as expressly authorized by Gould.

KIRK INTERLOCK SYSTEM
115 KV. CABLE ADDITION TO UNION STREET SUBSTATION (3000 AMP BUS)
THE CITY OF SEATTLE

GOULD Gould Inc., Power Division
P.O. Box 98, Greensburg, Pa. 15601
Telephone (412) 834–3300
Manufacturer of I–T–E Equipment

Scale	= 12"			
Assy Dwg				
Group	Dwn	Chkd	Appd	
B	RHS	JB	JOD	425-340

Rev 02

DWG. & REV. NO. 425-340 -

CONVERTED TO CAD BY C.I.T. QC: D.W.H. DATE: 06/12/97 PHONE (206) 467–6832 CONTACT: IVETTE DAMISH

FOR ORIGINAL APPROVAL SIGNATURES/INITIALS AND STAMPS, SEE REV. 0 AND PREVIOUS REV. MICROFILMS.

MD-2939

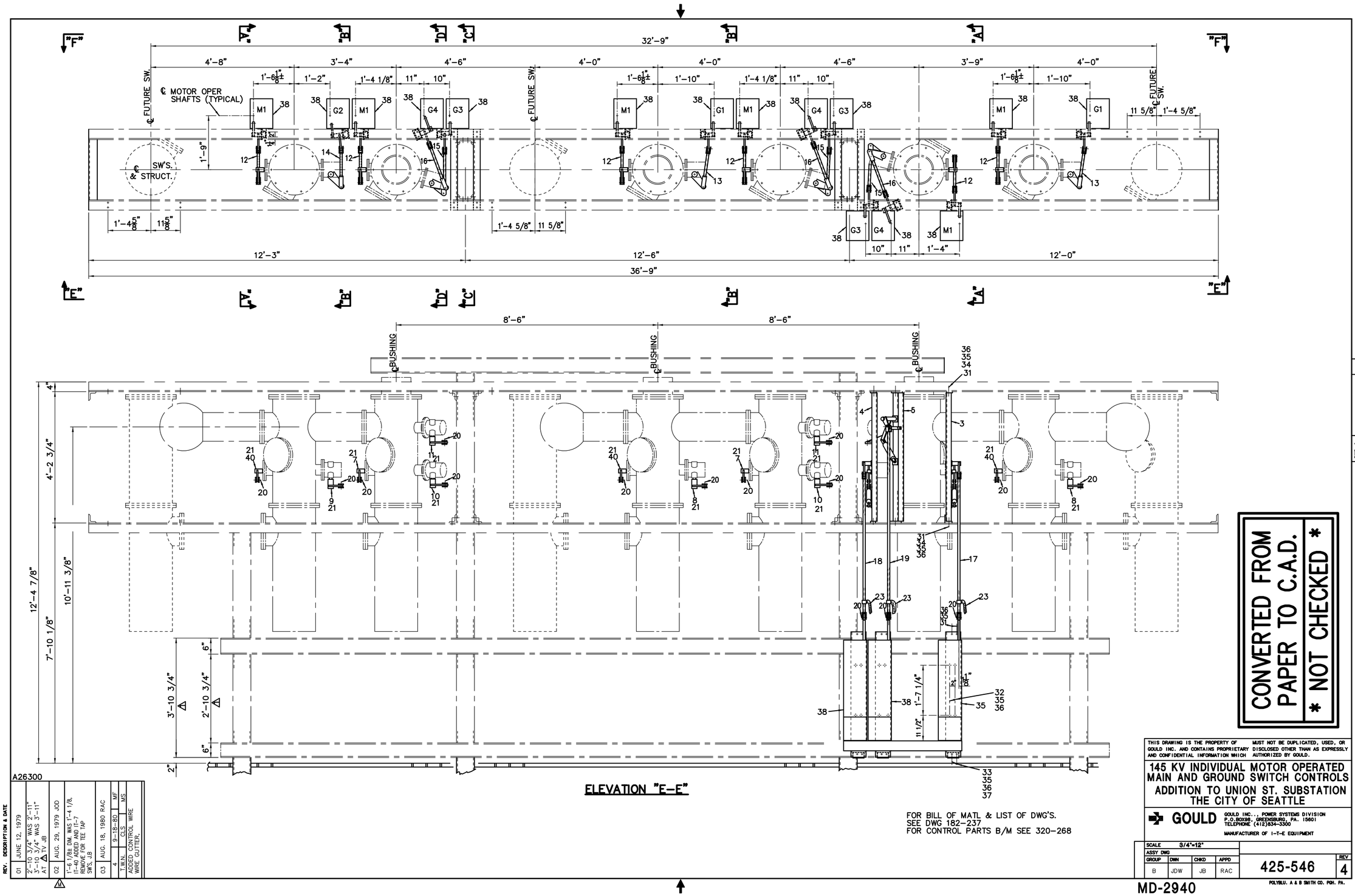

A26300

REV.	DESCRIPTION & DATE		
01	JUNE 12, 1979		
	2'-10 3/4" WAS 2'-11" 3'-10 3/4" WAS 3'-11" AT △TV JB		
02	AUG. 29, 1979 JDD		
	1'-6 1/8± DIM. WAS 1'-4 1/8. IT-40 ADDED AND IT-7 REMOVE FOR TEE TAP SWS, JB		
03	AUG. 18, 1980 RAC		
4	9-18-80	MF	
T.M.N.	C.L.S	MS	
	ADDED CONTROL WIRE GUTTER,		

THIS DRAWING IS THE PROPERTY OF GOULD INC. AND CONTAINS PROPRIETARY AND CONFIDENTIAL INFORMATION WHICH MUST NOT BE DUPLICATED, USED, OR DISCLOSED OTHER THAN AS EXPRESSLY AUTHORIZED BY GOULD.

145 KV INDIVIDUAL MOTOR OPERATED MAIN AND GROUND SWITCH CONTROLS
ADDITION TO UNION ST. SUBSTATION
THE CITY OF SEATTLE

GOULD
GOULD INC., POWER SYSTEMS DIVISION
P.O.BOX98, GREENSBURG, PA. 15601
TELEPHONE (412)834-3300
MANUFACTURER OF I-T-E EQUIPMENT

SCALE 3/4"=12"				
ASSY DWG				
GROUP	DWN	CHKD	APPD	425-546 REV 4
B	JDW	JB	RAC	

POLYBLU. A & B SMITH CO. PGH. PA.

CONVERTED FROM PAPER TO C.A.D.
* NOT CHECKED *

DWG. & REV. NO. 425-546 4

REVISIONS

REV	DATE	CK	APP	W.O.#	DESCRIPTION
DR					

CAD CONVERSION VENDOR: SARA SYSTEMS. INC.TO Q-CAD,INC.
CONTACT PERSON: LISA DORSEY
DATE: APR. 1997
TEL: 1-800-700-3025
ADDRESS: 7101 NORTH MESA,STE.165
EL PASO,TX 79912

FOR ORIGINAL APPROVAL SIGNATURES/ INITIALS AND STAMPS, SEE REV 0 AND PREVIOUS REV.

ENDORSEMENTS

SIGNATURE	DATE
DR :	
CK :	
DSGN:	
CK :	

CITY OF SEATTLE
CITY LIGHT DEPARTMENT
APPROVED FOR CITY LIGHT DEPARTMENT
DATE

145 KV INDIVIDUAL MOTOR OPERATED MAIN AND GROUND SWITCH CONTROLS
ADDITION TO UNION ST. SUBSTATION
THE CITY OF SEATTLE

SHEET OF
CLASS.
DRAWING NO. MD-2940
SCALE 3/4"=12" REV. NO. 4

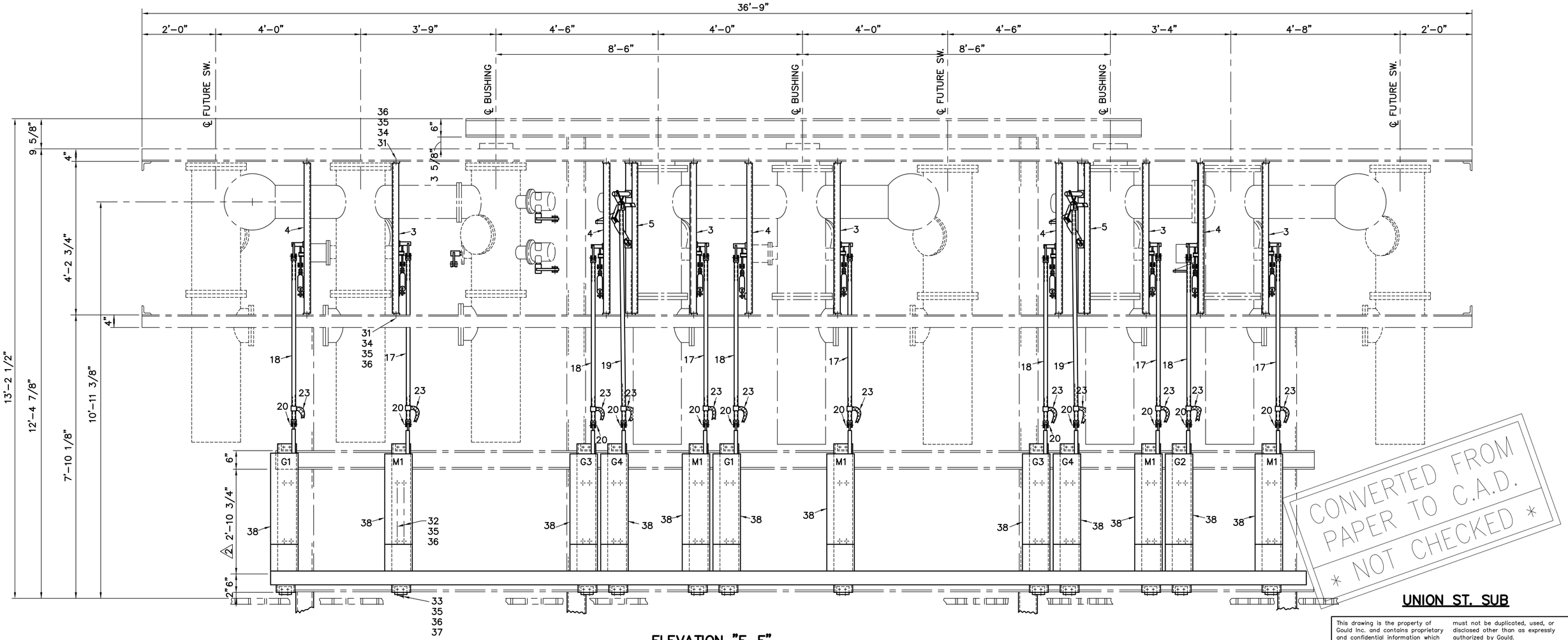

ELEVATION "F–F"

FOR BILL OF MAT'L. & LIST OF DWG'S.
SEE DWG. 182–237

CONVERTED
TO CAD
BY C.I.T.
QC: H.H.
DATE: 06–13–97
PHONE (206) 467–6832
CONTACT: IVETTE DAMISH

FOR ORIGINAL APPROVAL SIGNATURES/INITIALS AND STAMPS, SEE REV. 0 AND PREVIOUS REV. MICROFILMS.

UNION ST. SUB

This drawing is the property of Gould Inc. and contains proprietary and confidential information which must not be duplicated, used, or disclosed other than as expressly authorized by Gould.

145 KV INDIVIDUAL MOTOR OPERATED
MAIN AND GROUND SWITCH CONTROLS

ADDITION TO UNION ST. SUBSTATION
THE CITY OF SEATTLE

GOULD Gould Inc., Power Division
P.O. Box 98, Greensburg, Pa. 15601
Telephone (412) 834–3300
Manufacturer of I–T–E Equipment

Scale	3/4"= 12"			
Assy Dwg				
Group	Dwn	Chkd	Appd	
B	JdW	JB	RAC	425-547

Rev. 3

DWG. & REV. NO. 425–547 3

REV.	DESCRIPTION & DATE		
3	01 JUNE 12, 1979	9–10–80	6–23–80
	TWN	CLS	MS
	ADDED WIRE DUCT FOR MOTOR CONTROL ENCLOSURES		MF

A26300

MD-2941

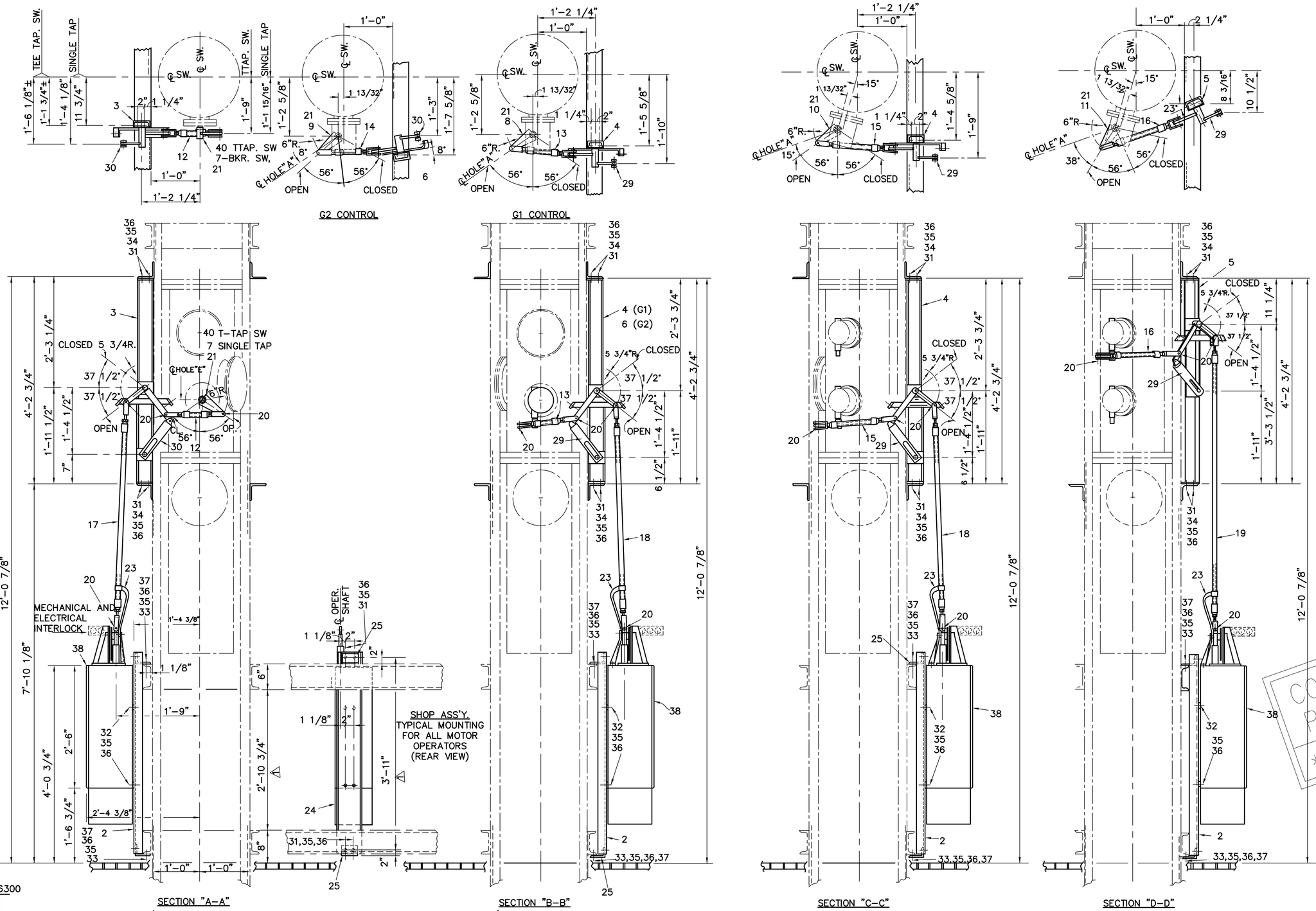

A26300

FOR BILL OF MATL. & LIST OF DWG'S.
SEE DWG. 182–237

FOR CONTROL PARTS B/M SEE 320–268

CONVERTED FROM PAPER TO C.A.D.
* NOT CHECKED *

This drawing is the property of Gould Inc. and contains proprietary and confidential information which must not be duplicated, used, or disclosed other than as expressly authorized by Gould.

SECTIONS FOR 145KV INDIVIDUAL MOTOR OPERATED MAIN AND GROUND SW. CONTROLS

ADDITION TO UNION ST. SUBSTATION
THE CITY OF SEATTLE

GOULD
Gould Inc., Power Systems Division
P.O. Box 98, Greensburg, Pa. 15601
Telephone (412)834–3300
Manufacturer of I–T–E Equipment

Scale	1" = 12"			
Assy Dwg				
Group	Dwn	Chkd	Appd	
B	JdW	JB	RAC	425-548

Rev 03

DWG. & REV. NO. 425-548

REV. | DESCRIPTION & DATE
03 | AUG. 18, 1980

MF

CONVERTED
TO CAD
BY C.I.T.
QC: M.H.
DATE: 7/3/97
PHONE (206) 467–6832
CONTACT: IVETTE DAMISH

FOR ORIGINAL APPROVAL SIGNATURES/INITIALS AND STAMPS, SEE REV. 0 AND PREVIOUS REV. MICROFILMS.

POLYBLU. A&B SMITH CO., PGH., PA.

MD-2942

301	501	ITEM	PART NAME	DRAWING	MARK	PROC. REF NOTE
		1	ASSEMBLY	THIS		
–	1	2	GAS MONITOR, VALVE, FITTINGS AND SUPPORT	THIS	301	Ⓐ
1	–	3	GAS MONITOR EQUIPMENT	422–351	307	
1	–	4	GAS MONITOR SUPPORT	320–267	301	
4	–	5	3/8"–16x1" LG AS H.H.S.M. BOLT (GALV.)	192336	X	
4	–	6	3/8"–16 A.S. HEX NUT (GALV.)	633131	X	
4	–	7	3/8"ø STEEL FLATWASHER (GALV.)	962029	X	
4	–	8	3/8"ø STEEL LOCKWASHER (GALV.)	965613	X	
1	–	9	DIAPHRAM VALVE (BRASS)	920109	Ⓖ Ⓗ	RT–2–7
–	1 PIECE	10	BRAZING ALLOY (1/16" DIA. x 20" LG. MS–2–242.01)			
2	1	14	WIRE TIE	785820		
–	2	15	SUPPORT BRACKET (GALV.)	236–526	001	
1	5	16	MCS JIFFY SINGLE CLIP	300550		
1	5	17	#10 32x1" LG R.D. H.D. SCREW (SIL. BRZ.)	807125		
1	5	18	#10–32 NUT (SIL. BRZ.)	631665		
–	1	19	12 OZ. TUBE G.E. CO. RTV –#102 SEALENT	X		Ⓒ
–	1	20	SENSING BULB HOUSING	218–469	301	Ⓒ Ⓓ
1	–	21	3/8" WROT–COPPER TEE	423–302	010	RP–2–7
–	1	22	3/8" WROT–COPPER COUPLING	423–302	009	RP–2–7
–	PRINT	23	WIRING DIAGRAM	235–035		
1	–	24	EYE BOLT (Z.P.)	196150		
2	4	25	1/4"–20 A.S. HEX NUT (Z.P.)	632133		
1	4	26	1/4" STEEL LOCKWASHER (Z.P.)	965410		
1	–	27	3/8" O.D. CU. TUBING x.049" WALL x 15'–0" LG.	350106	Ⓑ Ⓖ	RP–2–7
X	X	X	1/4"–20x1" LG. A.S.H.H.S.M. BOLT (Z.P.)	192124		
X	X	X	5/8"–11x1 1/2" LG. A.S.H.H.S.M. BOLT (GALV.)	192713		
X	X	X	5/8"–11 A.S. HEX. NUT (GALV.)	635152		
X	X	X	5/8"ø STEEL TAPERED WASHER (GALV.)	S#26739		

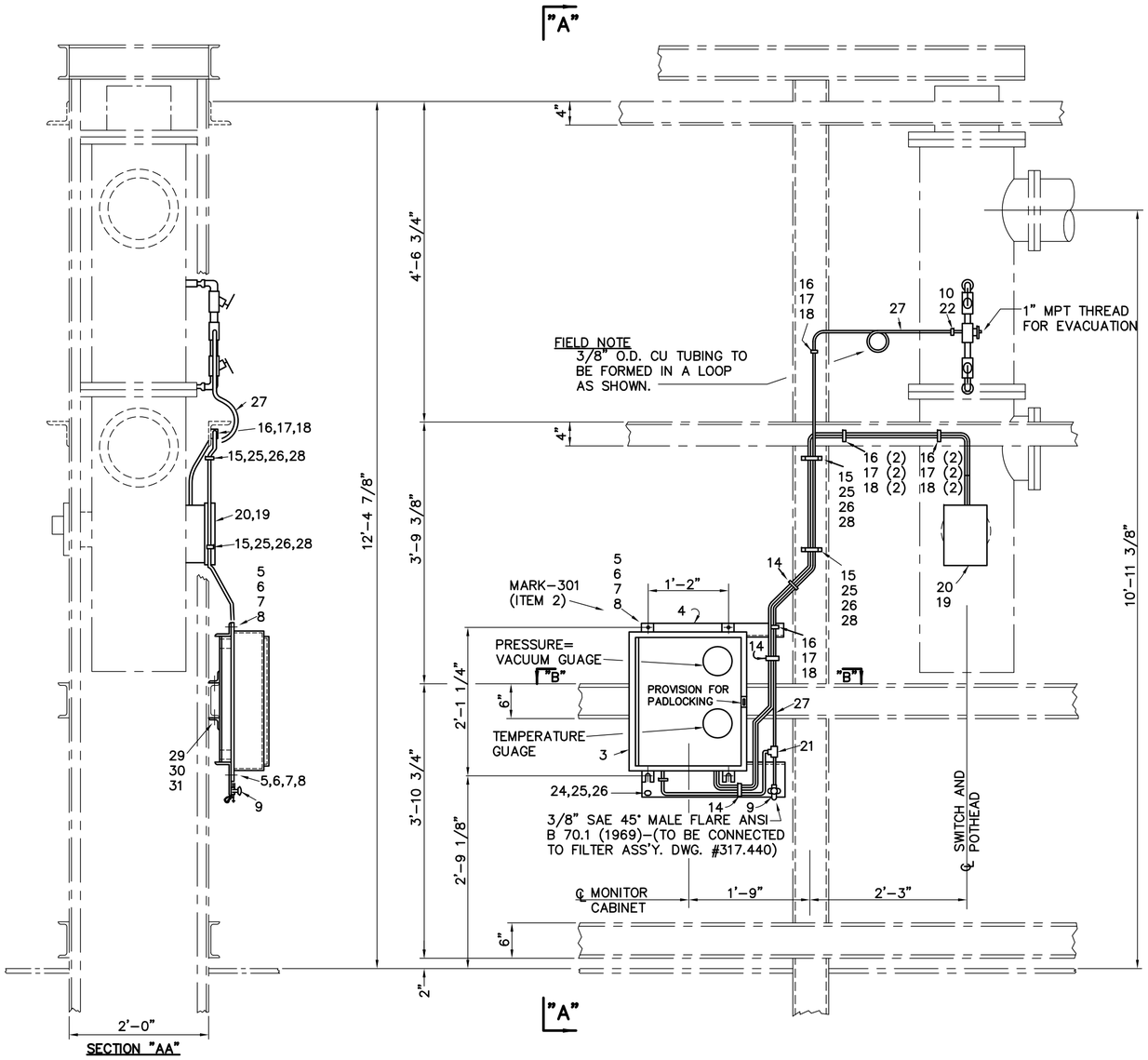

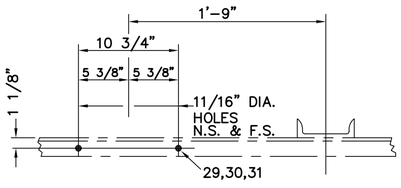

SECTION "BB" (ENLARGED)

MOUNTING DIMENSIONS FOR MONITOR SUPPORT (ITEM No. 4)

SCALE 1 1/2"=12"

NOTES

Ⓐ SHOP ASSEMBLE FOR SHIPMENT

Ⓑ TUBING IS LONGER THAN REQUIRED. CUT TO ACTUAL LENGTH IN FIELD. ENDS OF TUBING TO BE SQUARE AND PARALLEL.

Ⓒ SENSING BULB HOUSING (IT–20) TO BE TACK WELDED IN PLACE. AFTER TACK WELDING CLEAN SURFACE WITH SOLITE 70 AND SEAL OPENINGS WITH RTV–102 (IT.19)

Ⓓ MONITOR SENSING BULB AND SENSING BULB HOUSING (IT.–20) MAY BE POSITIONED AT A CONVENIENT POINT ON THE POTHEAD HOUSING USING THE LENGTH OF THE CAPILLARY TUBE AS THE DETERMINING FACTOR (DO NOT SHARP BEND OR CRUSH CAPILLARY TUBE)

Ⓖ ALL SHOP AND FIELD BRAZED JOINTS PER RP–2–7 M.S.–2,242.01

Ⓗ PACKLESS PURG, SUPERIOR VALVE CO. CAT #234A x 8–6 WITH KEL–F SEAT

CONVERTED FROM PAPER TO C.A.D. * NOT CHECKED *

UNION ST

This drawing is the property of Gould Inc. and contains proprietary and confidential information which must not be duplicated, used, or disclosed other than as expressly authorized by Gould.

MONITOR ASSEMBLY FOR 145 K.V. METAL ENCLOSED PRESSURIZED SF–6 GAS INSULATED BUS.

GOULD
Gould Inc., Power Systems Division
P.O. Box 98, Greensburg, Pa. 15601
Telephone (412) 834–3300
Manufacturer of I–T–E Equipment

Scale	1" = 12"			
Assy Dwg				
Group	Dwn	Chkd	Appd	
B	RHS	JB	RAC	425–342

Rev 02

DWG. & REV. NO. 425–342 –

CONVERTED TO CAD BY C.I.T. QC: M.H. DATE: 6/10/97 PHONE (206) 467–6832 CONTACT: IVETTE DAMISH

FOR ORIGINAL APPROVAL SIGNATURES/INITIALS AND STAMPS, SEE REV. 0 AND PREVIOUS REV. MICROFILMS.

45–A26300

MF 02 JULY 9,1979

MD-2943

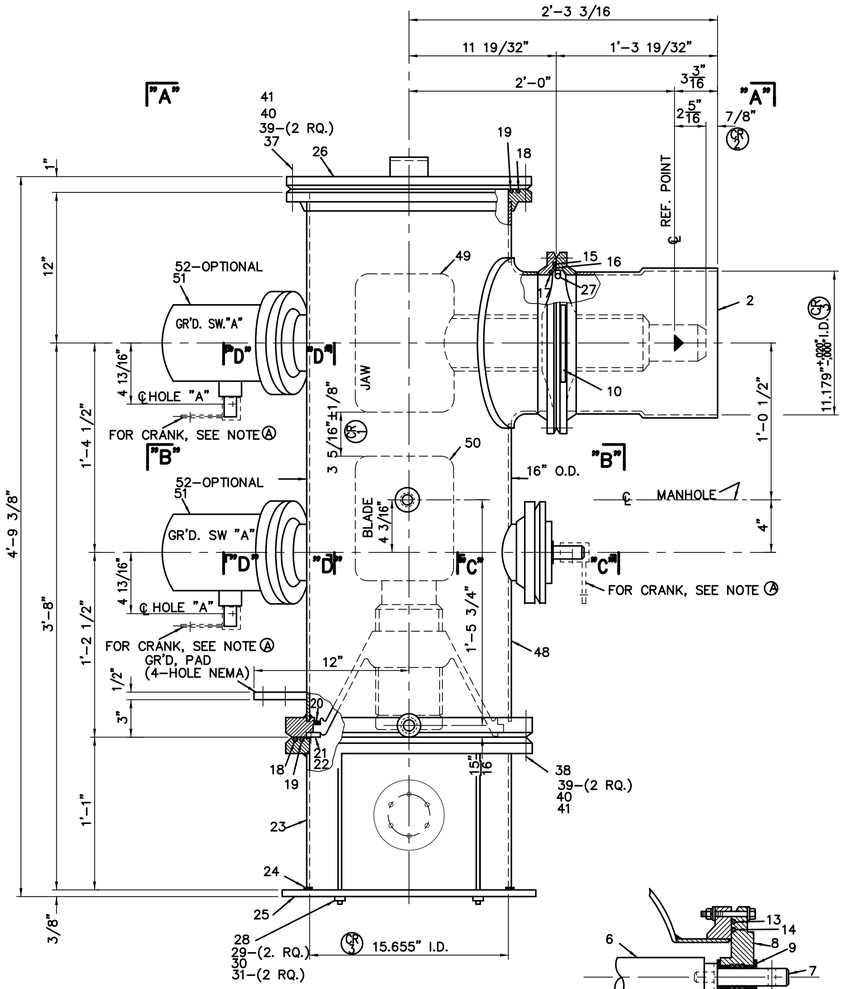

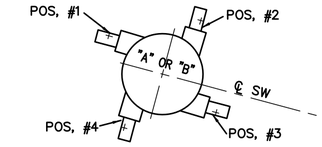

SHOP ASSEMBLY

INDEX GROUND OR GROUND-TEST SWITCH LOCATION AS CALLED FOR ON SHIPPING ASS'Y BILL OF MATERIAL

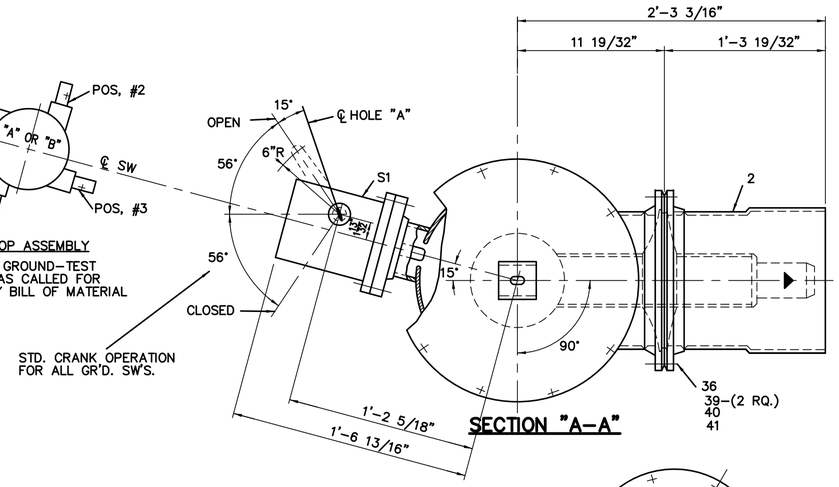

SECTION "A-A"

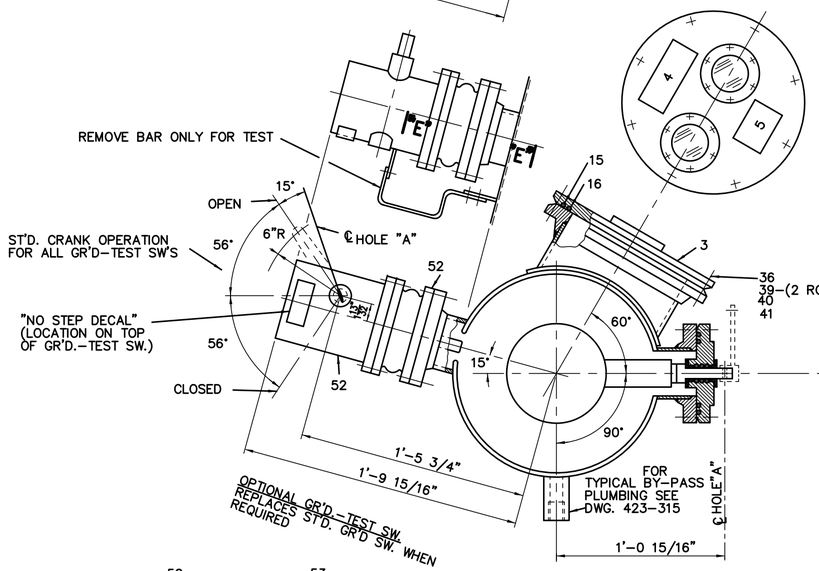

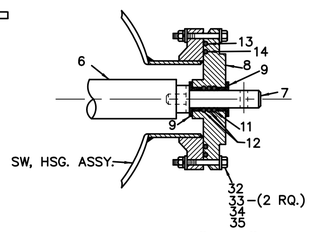

SECTION "C-C"

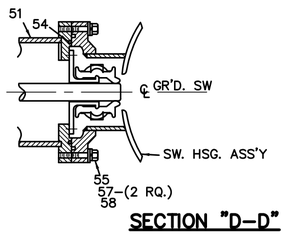

SECTION "D-D"

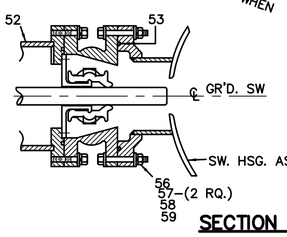

SECTION "E-E"

SECTION "B-B"

Ⓐ SEE CONTROL DRAWING.
Ⓑ TS4534-6.100.2

CR ALIGNMENT & 1'.D. CHECK WITH GAUGE

UNION ST

ALL DIM'S. OTHER THAN CR ARE R.E.F. DIM'S

THIS DRAWING IS THE PROPERTY OF GOULD INC. AND CONTAINS PROPRIETARY INFORMATION MUST NOT BE DUPLICATED, USED, OR DISCLOSED OTHER THAN AS EXPRESSLY AND CONFIDENTIAL INFORMATION WHICH AUTHORIZED BY GOULD.

145 KV, (650 KV B. I. L.) 2000 AMP SINGLE POLE CIRCUIT BREAKER SWITCH ASS'Y. W/WO 76 KA OR 101 KA GR'D. AND/OR GR'D, TEST SW'S. (BARRIER & NON-BARRIER BLADE END)

GOULD
GOULD INC., POWER SYSTEMS DIVISION
P.O.BOX 98, GREENSBURG, PA. 15601
TELEPHONE (412)834-3300
MANUFACTURER OF I-T-E EQUIPMENT

SCALE 3/16"=1 OR 2 1/4"=12"				
ASSY DWG 425-510 B/M				
GROUP	DWN	CHKD	APPD	425-509 REV 01
B	FG	JB		

POLYBLU. A & B SMITH CO. PGH. PA.

MD-2944

REV. 01 | DESCRIPTION & DATE 1-10-80 JAN. 29,1979 MDR STD | 45-A25800

MF

CONVERTED FROM PAPER TO C.A.D.
* NOT CHECKED *

DWG. & REV. NO. 425-509 -

REVISIONS

REV	DATE	MF
DR	CK	APP
W.O.#	DESCRIPTION	

CAD CONVERSION VENDOR: SARA SYSTEMS. INC.TO Q-CAD,INC.
CONTACT PERSON: LISA DORSEY
DATE: MAY. 1997
TEL: 1-800-700-3025
ADDRESS: 7101 NORTH MESA,STE.165
EL PASO,TX 79912

FOR ORIGINAL APPROVAL SIGNATURES/ INITIALS AND STAMPS, SEE REV 0 AND PREVIOUS REV.

ENDORSEMENTS

SIGNATURE	DATE
DR :	
CK :	
DSGN:	
CK :	

CITY OF SEATTLE
CITY LIGHT DEPARTMENT

APPROVED FOR CITY LIGHT DEPARTMENT

DATE

145 KV, (650 KV B. I. L.) 2000 AMP SINGLE POLE CIRCUIT BREAKER SWITCH ASS'Y. W/WO 76 KA OR 101 KA GR'D. AND/OR GR'D, TEST SW'S. (BARRIER & NON-BARRIER BLADE END)

SHEET OF
CLASS.
DRAWING NO. MD-2944
SCALE
REV. NO. 01

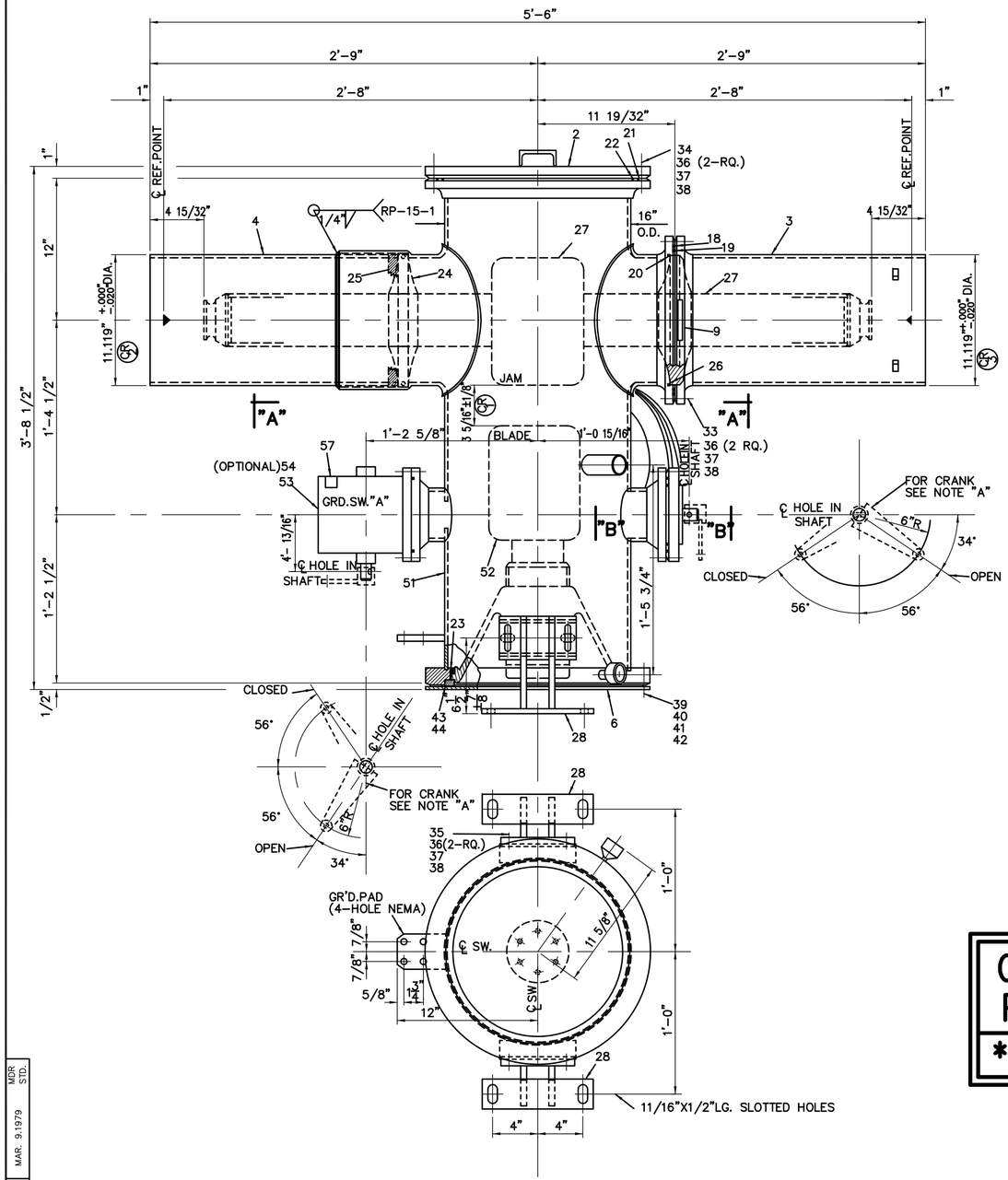

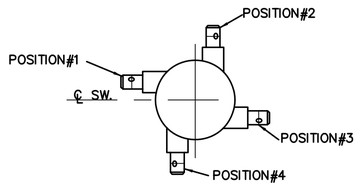

SHOP ASSEMBLY

INDEX GROUND OR GRD-TEST SWITCH LOCATION AS CALLED FOR ON SHIPPING ASS'Y BILL OF MATERIAL

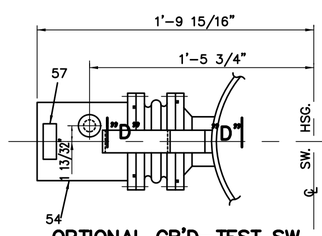

OPTIONAL GR'D-TEST SW.

REPLACES ST'D.GR'D.SW. WHEN REQUIRED.

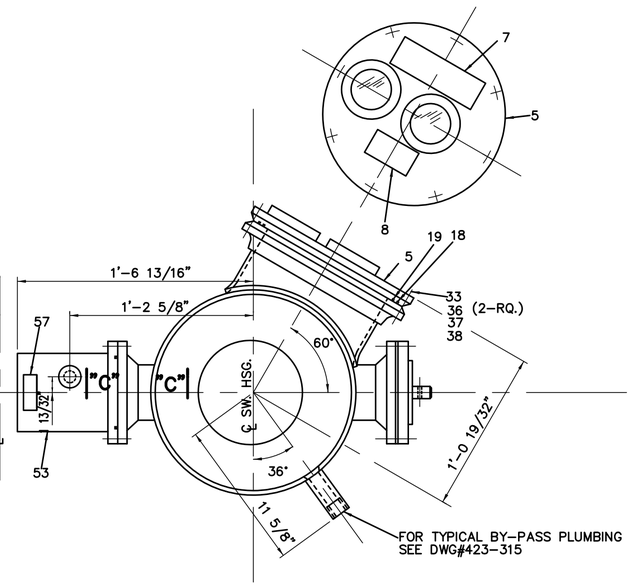

SECTION"A-A"

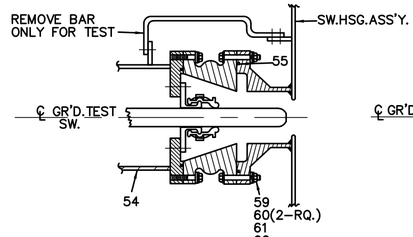

SECTION"D-D" (GR'D.-TEST SW.)

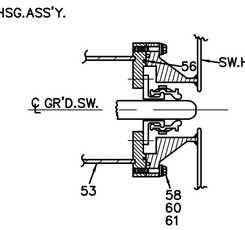

SECTION"C-C" (ST'D.GR'D.SW.)

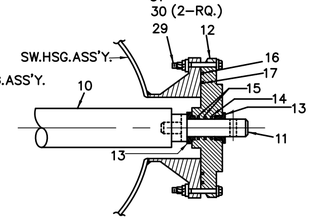

SECTION"B-B" (MAIN SW.)

Ⓐ SEE CONTROL DWG
Ⓑ TS4534-6.100.2
FOR BILL OF MAT'L SEE D#425-319

CONVERTED FROM PAPER TO C.A.D.
* NOT CHECKED *

REV. DESCRIPTION & DATE 1-10-80
MF 01 MAR. 9.1979 MDR STD.

DWG. & REV. NO. 425-318 –

UNION ST

THIS DRAWING IS THE PROPERTY OF GOULD INC. AND CONTAINS PROPRIETARY AND CONFIDENTIAL INFORMATION WHICH MUST NOT BE DUPLICATED, USED, OR DISCLOSED OTHER THAN AS EXPRESSLY AUTHORIZED BY GOULD.

145 KV (650 KV BIL) 2000 AMP SINGLE POLE TEE TAP SWITCH ASS'Y. W/WO 76 KA OR 101 KA GR'D OR GR'D. TEST SW. (TAP OUT BOTTOM) MODEL TSD-4

GOULD
GOULD INC., POWER SYSTEMS DIVISION
P.O. BOX 98 GREENSBURG, PA 15601
TELEPHONE (412) 834-5300
MANUFACTURER OF I-T-E EQUIPMENT

SCALE	=12"			
ASSY DWG 425-319 BIM				
GROUP	DWN	CHKD	APPD	425-318 REV 01
B	JAW	JB		

MD-2945

REVISIONS

REV	DATE	MF
DR	CK	APP
W.O.#	DESCRIPTION	

CAD CONVERSION VENDOR: SARA SYSTEMS. INC.TO Q-CAD,INC.
CONTACT PERSON: LISA DORSEY
DATE: MAY 1997
TEL: 1-800-700-3025
ADDRESS: 7101 NORTH MESA,STE.165 EL PASO,TX 79912

FOR ORIGINAL APPROVAL SIGNATURES/ INITIALS AND STAMPS, SEE REV 0 AND PREVIOUS REV.

ENDORSEMENTS

SIGNATURE	DATE
DR :JAW	
CK :	
DSGN:	
CK :	

CITY OF SEATTLE
CITY LIGHT DEPARTMENT
APPROVED FOR CITY LIGHT DEPARTMENT
DATE

145 KV (650 KV BIL) 2000 AMP SINGLE POLE TEE TAP SWITCH ASS'Y. W/WO 76 KA OR 101 KA GR'D OR GR'D. TEST SW. (TAP OUT BOTTOM) MODEL TSD-4

SHEET OF
CLASS.
DRAWING NO. MD-2945
SCALE REV. NO. 01

TABULATION

MK	ITEM-2 DWG.	ITEM-2 MK.	ITEM-3 DWG.	ITEM-3 MK.	DIMENSIONS "A"	"B"	"C"	"D"
301	320-108	003	317-064	305	6'-8 5/16"	6'-4 1/8"	1'-8 1/16"	9"

SEE TAB	ITEM	PART	DWG.	MK.	NOTE
	1	ASSEMBLY	THIS	SEE TAB	
1	2	EXPANDED HOUSING	SEE TAB	SEE TAB	
1	3	CONDUCTOR ASSEMBLY	" "	"	RP-4-11
1	4	BUSHING	218-095	001	
1	5	MOUNTING DISC. & FLARED HOUSING	315-932	301	
1	6	SPACER RING	169-923	001	
1	7	SPACER RING	169-923	002	
40	8	CLAMP WASHER	169-922	001	
1	9	CORONA SHIELD ASS'Y	218-031	301	Ⓐ
1	10	CORONA SHIELD ASS'Y	315-933	301	Ⓐ
1	11	PHENOLIC INSULATING WASHER	175-566	001	
1	12	PHENOLIC INSULATING WASHER	175-566	002	
1	13	SLIDE TYPE DISC INSULATOR & HDWE.	312-579	502	RP-4-11
4	15	SPACER	171-155	001	
16	16	SPECIAL LOCKWASHER	64586-A	IT-13	
4	17	1/4"-20X1 1/4"LG. A.S.H.H. SST. M. BOLT. (TFL)	194127		
4	18	1/4" SST. FLATWASHER	961625		
4	19	1/4" SST. LOCKWASHER	965430		
4	20	1/2"-13X1 1/4" LG. A.S.H.H. SST. M. BOLT.	194414		RP-19-10
16	21	1/2"-13X4"LG. A.S.H.H. ALUM BOLT.	190445		RP-19-10
24	22	1/2"-13X4 1/2"LG. A.S.H.H. ALUM BOLT.	190448		RP-19-10
4	23	1/2" SST FLATWASHER	962423		
4	24	1/2" SST LOCKWASHER	965790		
40	25	1/2"-3 HEX. ALUM. NUT	634163		
1	26	3/4" WIDE TEMP-R-TAPE X 36"LG. (1-WRAP)	880157		RP-19-6
24	27	SPECIAL LOCKWASHER	64586-A	IT-12	
2	28	CLAMP WASHER SHIM	175-107	003	
2	29	CLAMP WASHER SHIM	175-107	004	
1	30	O-RING. N.E.O.	171-340	006	RP-19-7
1	31	O-RING. E.P.T.	171-180	006	RP-19-7
1	32	O-RING. N.E.O.	171-340	019	RP-19-7
1	33	O-RING. E.P.T.	170-180	019	RP-19-7

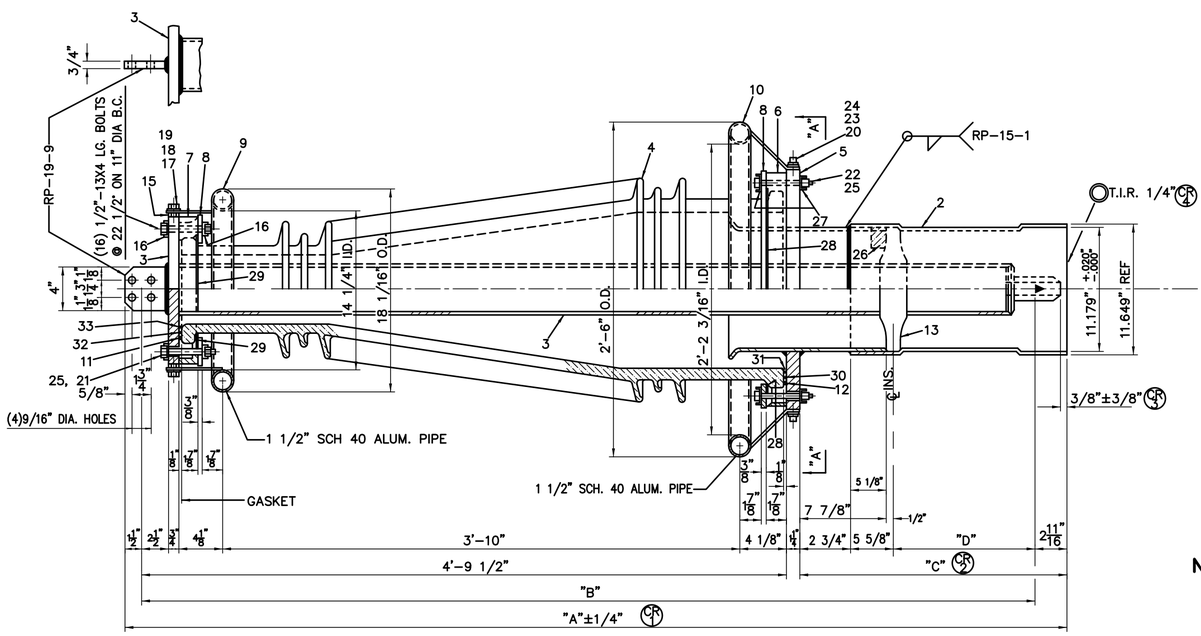

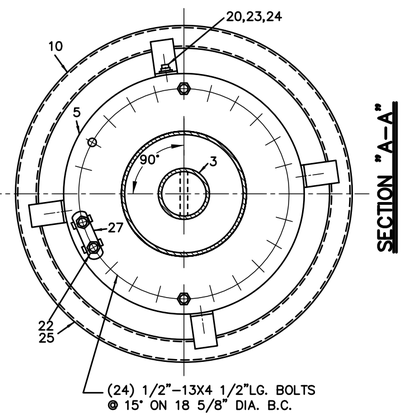

SECTION "A-A"

NOTES

Ⓐ DO NOT STAND OR USE CORONA SHIELD RING AS A LADDER SUPPORT.

CONVERTED FROM PAPER TO C.A.D.
* NOT CHECKED *

THIS DRAWING IS THE PROPERTY OF THE I-T-E IMPERIAL CORPORATION AND CONTAINS PROPRIETARY AND CONFIDENTIAL INFORMATION WHICH MUST NOT BE DUPLICATED. USED. OR DISCLOSED OTHER THAN AS EXPRESSLY AUTHORIZED BY I-T-E.

UNION ST

FOR BILL OF MATERIAL SEE DWG.

TABULATED OUTDOOR ENTRANCE BUSHING FOR SF6 GAS INSULATED BUS 145KV.

ITE Imperial CORPORATION
GREENSBURG, PENNSYLVANIA, U.S.A.

SCALE	=12"			
ASSY DWG				
GROUP	DWN	CHKD	APPD	
B	TDS	JB		425-349 REV 01

MD-2946

REV. 1 DESCRIPTION & DATE 1-10-80
01 APR. 25,1979 MDR STD
MF

A5-26300

DWG. & REV. NO. 425-349

REVISIONS

REV	DATE	BY
DR	CK	APP
W.O.#	DESCRIPTION	

CAD CONVERSION VENDOR: SARA SYSTEMS. INC.TO Q-CAD,INC.
CONTACT PERSON: LISA DORSEY
DATE: MAY 1997
TEL: 1-800-700-3025
ADDRESS: 7101 NORTH MESA,STE.165
EL PASO,TX 79912

FOR ORIGINAL APPROVAL SIGNATURES/ INITIALS AND STAMPS, SEE REV 0 AND PREVIOUS REV.

ENDORSEMENTS

SIGNATURE	DATE
DR :	
CK :	
DSGN:	
CK :	

CITY OF SEATTLE
CITY LIGHT DEPARTMENT

APPROVED FOR CITY LIGHT DEPARTMENT

DATE

TABULATED OUTDOOR ENTRANCE BUSHING FOR SF6 GAS INSULATED BUS 145KV.

SHEET OF
CLASS.
DRAWING NO. MD-2946
SCALE REV. NO. 01

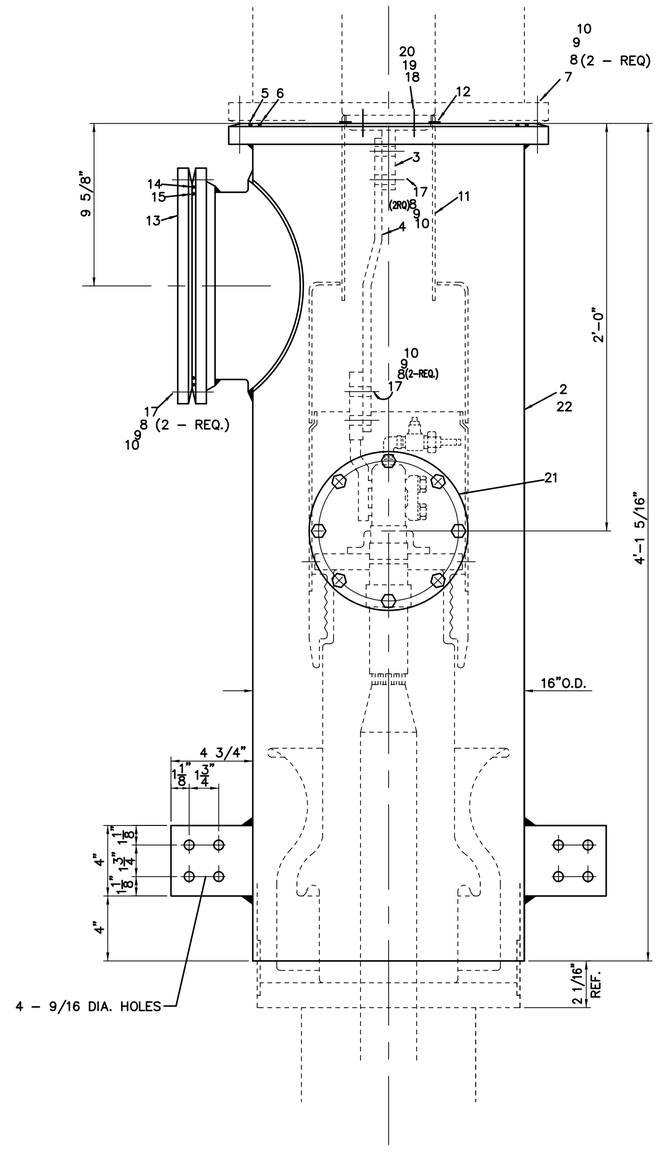

502	501	IT.	PART		DWG. AND NO.	MK.	PROC. REF.
		1	ASSEMBLY		THIS		
–	1	2	HOUSING		320–185	301	
1	1	3	TERMINAL		314–514	003	
1	1	4	FLEX. CONNECTOR		237–876	301	
1	1	5	"O"–RING (NEO. COMP.)		171–340	021	RP–19–7
1	1	6	"O"–RING (EPT. COMP.)		171–180	020	RP–19–7
10	10	7	1/2" – 13 X 3 1/2" LG. BOLT	(ALUM.)	190438		RP–19–10
52	52	8	1/2" FLATWASHER	(ALUM.)	962463		
26	26	9	1/2" LOCKWASHER	(ALUM.)	665801		
26	26	10	1/2" – 13 NUT	(ALUM.)	634163		
1	1	11	CORONA SHIELD		223–489	004	
3	3	12	#10 – 32 X 1/2" LG. S.S. SOCKET FL. HO. M. NYLOCK		801090		
1	1	13	COVER PLATE		316–392	001	
1	1	14	"O" – RING (NEO. COMP.)		171–340	001	RP–19–7
1	1	15	"O" – RING (EPT. COMP.)		168–148	017	RP–19–7
16	16	17	1/2" – 13 X 2 1/2" LG.	(ALUM.)	190426		RP–19–10
6	6	18	3/8" – 16 X 1 1/2" LG. BOLT	(ST. ST'L.)	194324		
6	6	19	3/8" LOCKWASHER	(ST. ST'L.)	965653		
6	6	20	3/8" FLATWASHER	(ST. ST'L.)	962069		
–	1	21	POTENTIAL INDICATOR		319–280	301	
1	–	22	HOUSING		320–185	302	

DWG. & REV. NO. 425–527 –

REV. DESCRIPTION & DATE 1–10–80

REV	DESCRIPTION & DATE	MF
01	APR. 8,1979	

45–26300

CONVERTED FROM PAPER TO C.A.D.

* NOT CHECKED *

UNION ST

THIS DRAWING IS THE PROPERTY OF GOULD INC. AND CONTAINS PROPRIETARY AND CONFIDENTIAL INFORMATION WHICH MUST NOT BE DUPLICATED, USED, OR DISCLOSED OTHER THAN AS EXPRESSLY AUTHORIZED BY GOULD.

145, KV POTHEAD HOUSING

GOULD
GOULD INC., POWER SYSTEMS DIVISION
P.O. BOX 98 GREENSBURG, PA 15601
TELEPHONE (412) 834-3300
MANUFACTURER OF I-T-E EQUIPMENT

SCALE =12"
ASSY DWG

GROUP	DWN	CHKD	APPD
B	TDS	JB	RAC

425-527 REV 01

MD-2947

REVISIONS

REV	DATE	MF
DR	CK	APP
W.O.#	DESCRIPTION	

CAD CONVERSION VENDOR: SARA SYSTEMS. INC.TO Q–CAD,INC.
CONTACT PERSON: LISA DORSEY
DATE: MAY 1997
TEL: 1–800–700–3025
ADDRESS: 7101 NORTH MESA,STE.165
EL PASO,TX 79912

FOR ORIGINAL APPROVAL SIGNATURES/ INITIALS AND STAMPS, SEE REV 0 AND PREVIOUS REV.

ENDORSEMENTS

SIGNATURE	DATE
DR : TDS	
CK :	
DSGN:	
CK :	

CITY OF SEATTLE
CITY LIGHT DEPARTMENT

APPROVED FOR CITY LIGHT DEPARTMENT

DATE

145, KV POTHEAD HOUSING

SHEET OF
CLASS.
DRAWING NO. MD-2947
SCALE REV. NO. 01

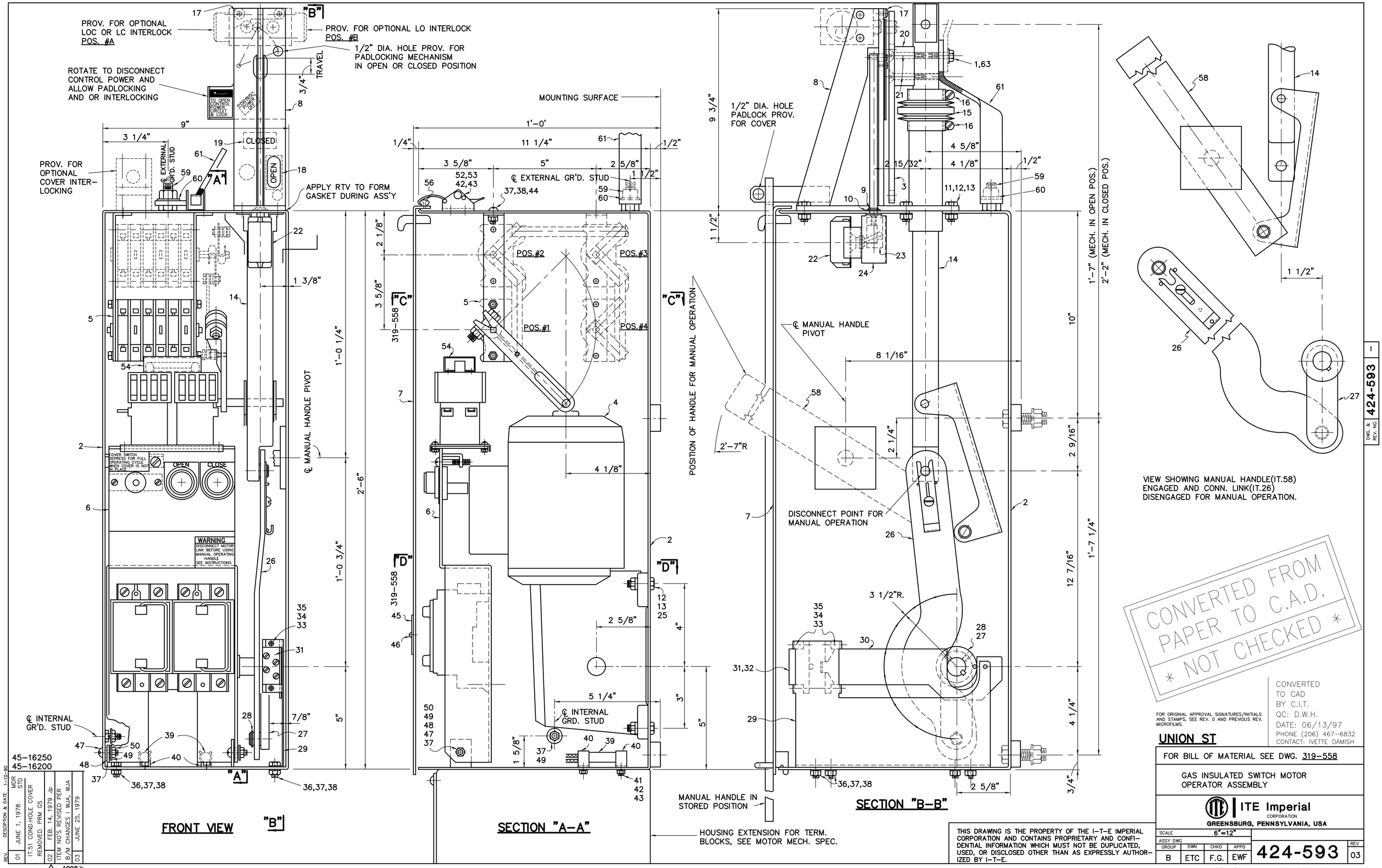

CONVERTED TO CAD BY C.I.T. QC: D.W.H. DATE: 06/13/97 PHONE (206) 467-6832 CONTACT: IVETTE DAMISH

FOR ORIGINAL APPROVAL SIGNATURES/INITIALS AND STAMPS, SEE REV. 0 AND PREVIOUS REV. MICROFILMS.

UNION ST

FOR BILL OF MATERIAL SEE DWG. 319-558

GAS INSULATED SWITCH MOTOR OPERATOR ASSEMBLY

ITE Imperial CORPORATION
GREENSBURG, PENNSYLVANIA, USA

SCALE	6"=12"			
ASSY DWG				
GROUP	DWN	CHKD	APPD	
B	ETC	F.G.	EWF	

424-593 REV 03

THIS DRAWING IS THE PROPERTY OF THE I-T-E IMPERIAL CORPORATION AND CONTAINS PROPRIETARY AND CONFIDENTIAL INFORMATION WHICH MUST NOT BE DUPLICATED, USED, OR DISCLOSED OTHER THAN AS EXPRESSLY AUTHORIZED BY I-T-E.

422-564

POLYBLW, A&B SMITH CO., PGH., PA. 8469-476

MD-2948

REV.	DESCRIPTION & DATE 1-10-80	
01	JUNE 1, 1978	MDR STD
	IT.51 COND.HOLE COVER REMOVED. PRM GS	
02	FEB. 14, 1979	Jp
	ITEM NO'S REVISED PER B/M CHANGES I WJA, WJA	
03	JUNE 25, 1979	

1098 MF 1101

5/8"ø ERECTION BOLTS	
GRIP	LEGNTH OF BOLT
3/8 TO 9/16	1 1/4
5/8 TO 13/16	1 1/2
7/8 TO 1 1/16	1 3/4
1 1/8 TO 1 5/16	2

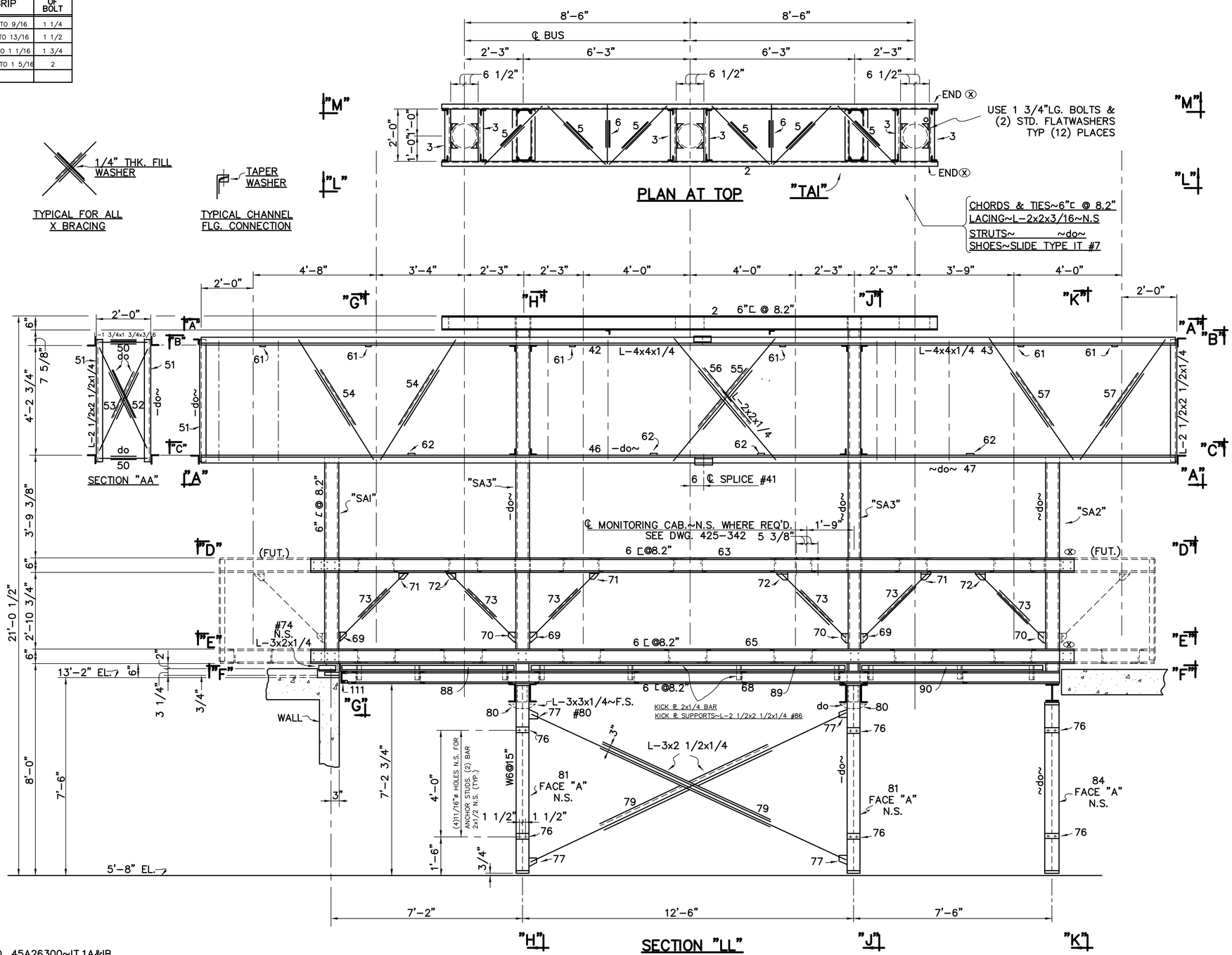

LACING AND KNEES~L-2x2x3/16~UNLESS NOTED
COLUMN BASE PL'S~3/4" THK.

ALL ITEM NO'S. PRECEDED BY THE LETTERS YE

FOR OTHER SECTIONS~SEE DWG. 425-916, 425-917, (MD-2950, -2951)
425-918 AND 425-919. (MD-2952 & -2953)
FOR GENERAL ARRANGEMENT PLAN VIEW, NOTES
AND LIST OF DRAWINGS~SEE DWG. 425-335 (MD-2933)

CONVERTED FROM PAPER TO C.A.D.
* NOT CHECKED *

UNION ST

This drawing is the property of Gould Inc. and contains proprietary and confidential information which must not be duplicated, used or disclosed other than as expressly authorized by Gould.

ERECTION PLANS
115 KV. CABLE ADDITION TO UNION STREET
SUBSTATION (2000 AMP. BUS)
THE CITY OF SEATTLE

GOULD
Gould Inc., Power Systems Division
P.O. Box 98, Greensburg, Pa. 15601
Telephone (412) 834-3300
Manufacturer of I-T-E Equipment

Scale	=12"			
Assy. Dwg.				
Group	Dwn.	Chkd.	Appd.	
B	J.E.S.	DB	PNW	425-915

Rev. 02

DWG. & REV. NO. 425-915 TL

CONVERTED TO CAD BY C.I.T.
QC: M.H.
DATE: 6/12/97
PHONE (206) 467-6832
CONTACT: IVETTE DAMISH

FOR ORIGINAL APPROVAL SIGNATURES/INITIALS AND STAMPS, SEE REV. 0 AND PREVIOUS REV. MICROFILMS.

S.O. 45A26300~IT.1A&IB

REV.	DESCRIPTION AND DATE	
02	OCT. 16, 1979	PNW

MF

POLYBLU. A&B SMITH CO. PGH, PA

MD-2949

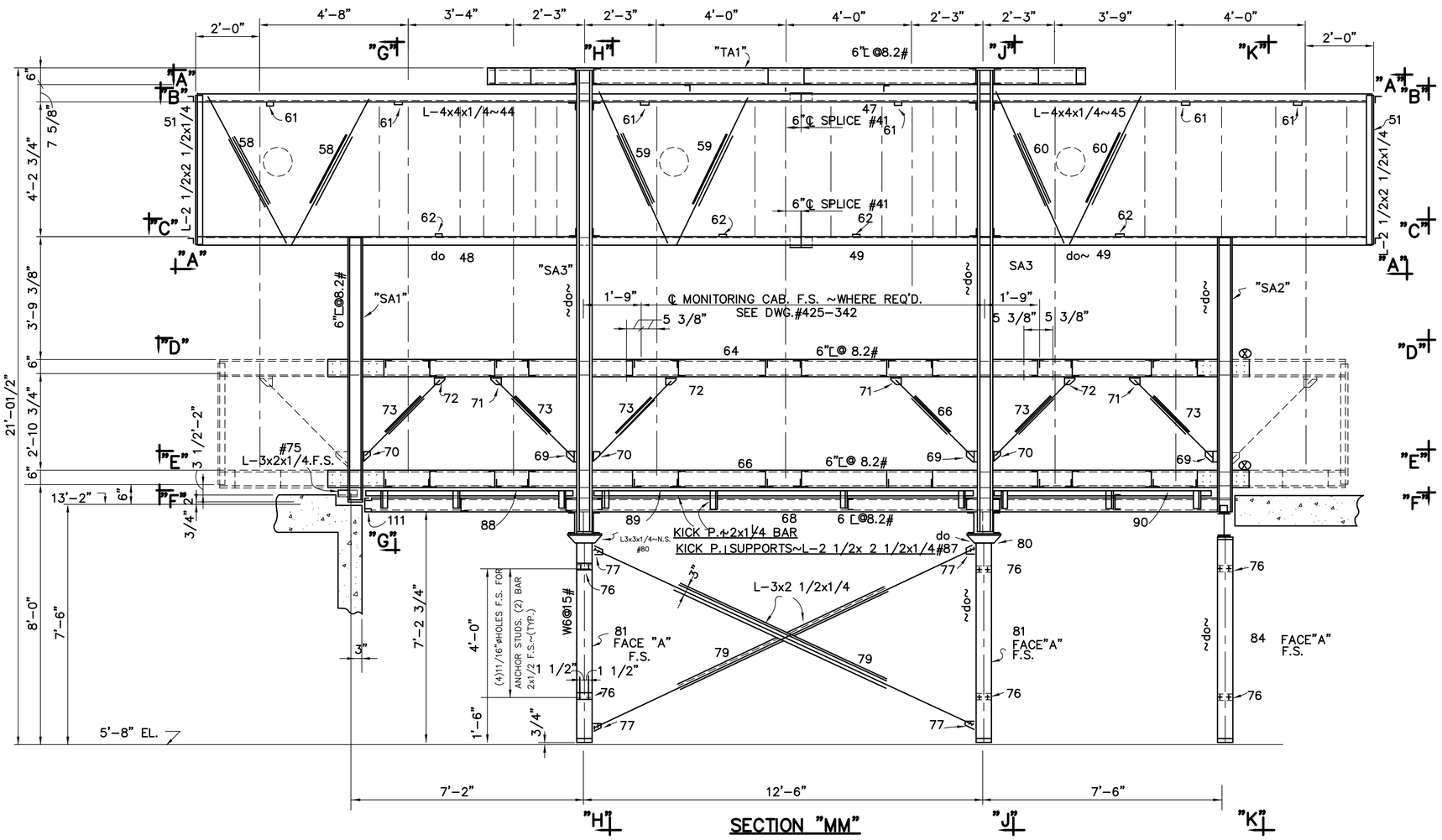

SECTION "MM"

LACING AND KNEES ~ L-2x2x3/16
COLUMN BASE P'S.~3/4"THK. Ⓦ

FOR PLAN VIEW AND NOTES~ SEE DWG. 425-915

(C.L. MD-2949)

CONVERTED FROM PAPER TO C.A.D. * NOT CHECKED *

CONVERTED
TO CAD
BY C.I.T.
QC: D.W.H.
DATE: 06/12/97
PHONE (206) 467-6832
CONTACT: IVETTE DAMISH

FOR ORIGINAL APPROVAL SIGNATURES/INITIALS AND STAMPS, SEE REV. 0 AND PREVIOUS REV. MICROFILMS.

S.O. 45A26300~1T.1A&1B

REV.	DESCRIPTION & DATE
02	OCT. 16, 1997 PHW

MF

UNION ST.

This drawing is the property of Gould Inc. and contains proprietary and confidential information which must not be duplicated, used, or disclosed other than as expressly authorized by Gould.

ERECTION PLAN
115Kv. CABLE ADDITION TO UNION STREET SUBSTATION (2000 AMP BUS)
THE CITY OF SEATTLE

GOULD
Gould Inc., Power Division
P.O. Box 98, Greensburg, Pa. 15601
Telephone (412)834-3300
Manufacturer of I-T-E Equipment

Scale	=12"			
Assy Dwg				
Group	Dwn	Chkd	Appd	
B	J.E.S	DB	PHW	425-916

Rev 02

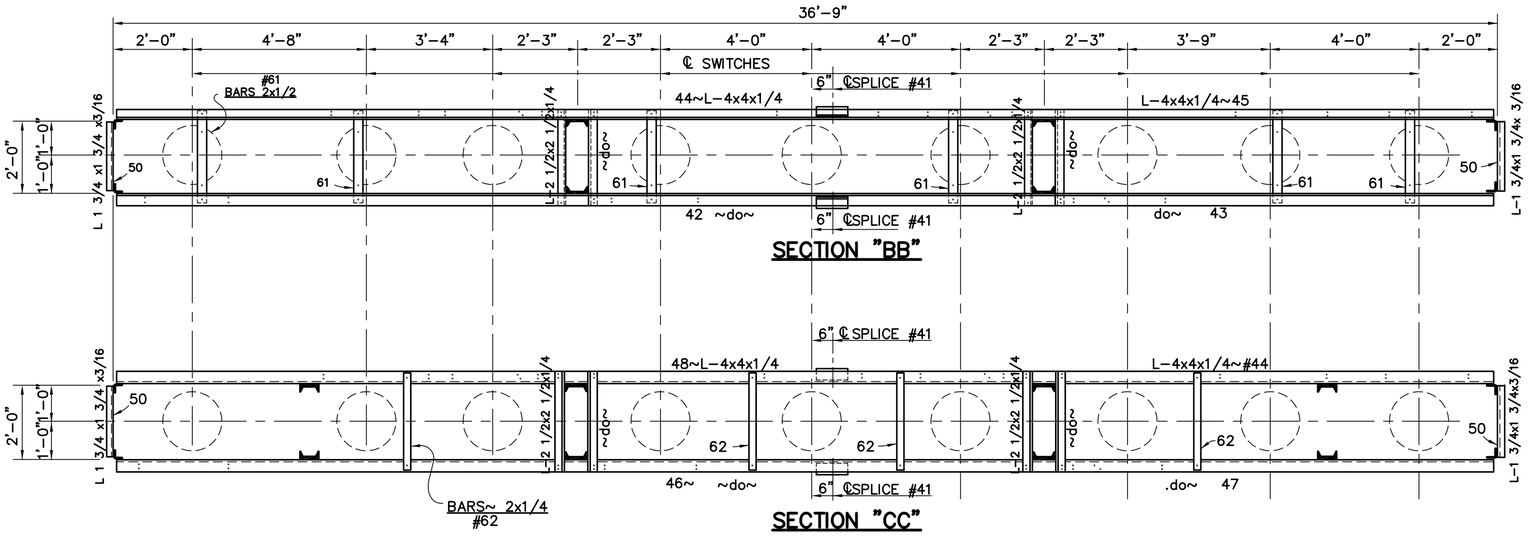

CONVERTED FROM PAPER TO C.A.D.
* NOT CHECKED *

UNION ST

This drawing is the property of Gould Inc. and contains proprietary and confidential information which must not be duplicated, used, or disclosed other than as expressly authorized by Gould.

ERECTION PLAN
115 KV. CABLE ADDITION TO UNION STREET
SUBSTATION (200 AMP BUS)
THE CITY OF SEATTLE

GOULD
Gould Inc., Power Systems Division
P.O. Box 98, Greensburg, Pa. 15601
Telephone (412)834-3300
Manufacturer of I-T-E Equipment

Scale	=12"			
Assy Dwg				
Group	Dwn	Chkd	Appd	Rev
B	J.E.S	DB	PHW	02

425-917

POLYBLU. A BB SMITH CO. PGH. PA.
MD-2951

DWG. & REV. NO. 425-917 4

FOR PLAN VIEW AND NOTES ~ SEE DWG. 425-915

CONVERTED
TO CAD
BY C.I.T.
QC: M.H.
DATE: 6/12/97
PHONE (206) 467-6832
CONTACT: IVETTE DAMISH

FOR ORIGINAL APPROVAL SIGNATURES/INITIALS AND STAMPS, SEE REV. 0 AND PREVIOUS REV. MICROFILMS.

S.O. 45A26300-IT.#1A & 1B

REV.	DESCRIPTION & DATE	
MF	02 OCT 16, 1979	PHW

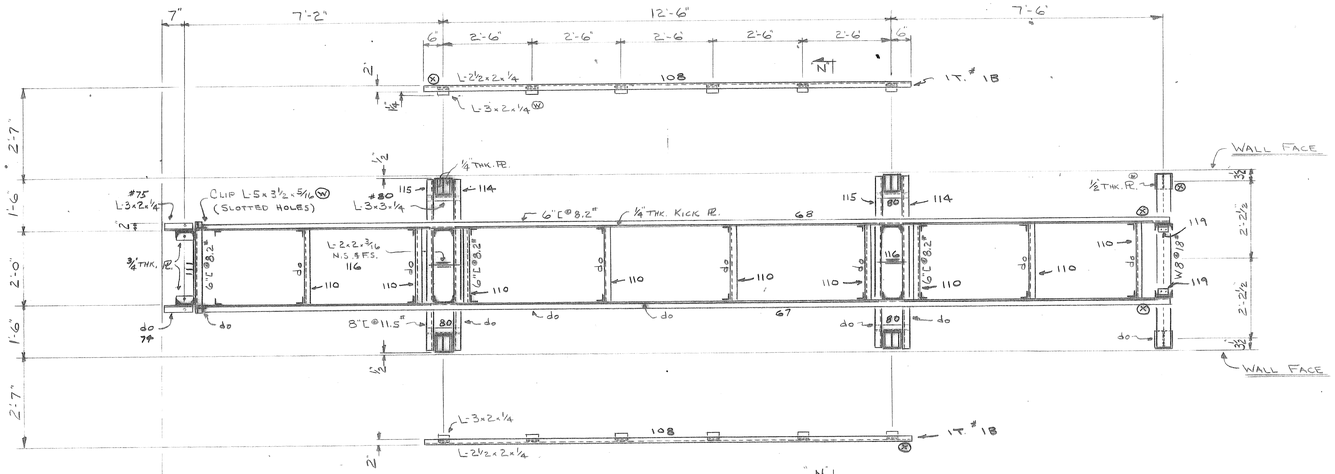

FOR PLAN VIEW AND NOTES - SEE DWG. 425-915

(CITY LIGHT DWG. NO. MD-2949)

S.O. 45A26300 - LT. 1A & 1B

REV.	DESCRIPTION & DATE 6-23-80		
01	JULY 20, 1979		
02	12-9-80	MF	
CJC	G.T.W.	CJD	ADDED END GRATES.

This drawing is the property of Gould Inc. and contains proprietary and confidential information which must not be duplicated, used, or disclosed other than as expressly authorized by Gould.

ERECTION PLAN
115 Kv. CABLE ADDITION TO UNION STEET SUBSTATION (2000 AMP. BUS)
THE CITY OF SEATTLE

GOULD
Gould Inc., Power Systems Division
P.O. Box 98, Greensburg, Pa 15601
Telephone (412) 834-3300
Manufacturer of I-T-E Equipment

Scale	= 12"			
Assy Dwg				
Group	Dwn	Chkd	Appd	
B	J.E.S	DB	PHW	425-918 2

DWG. & REV. NO. 425-918 2

MD-2952

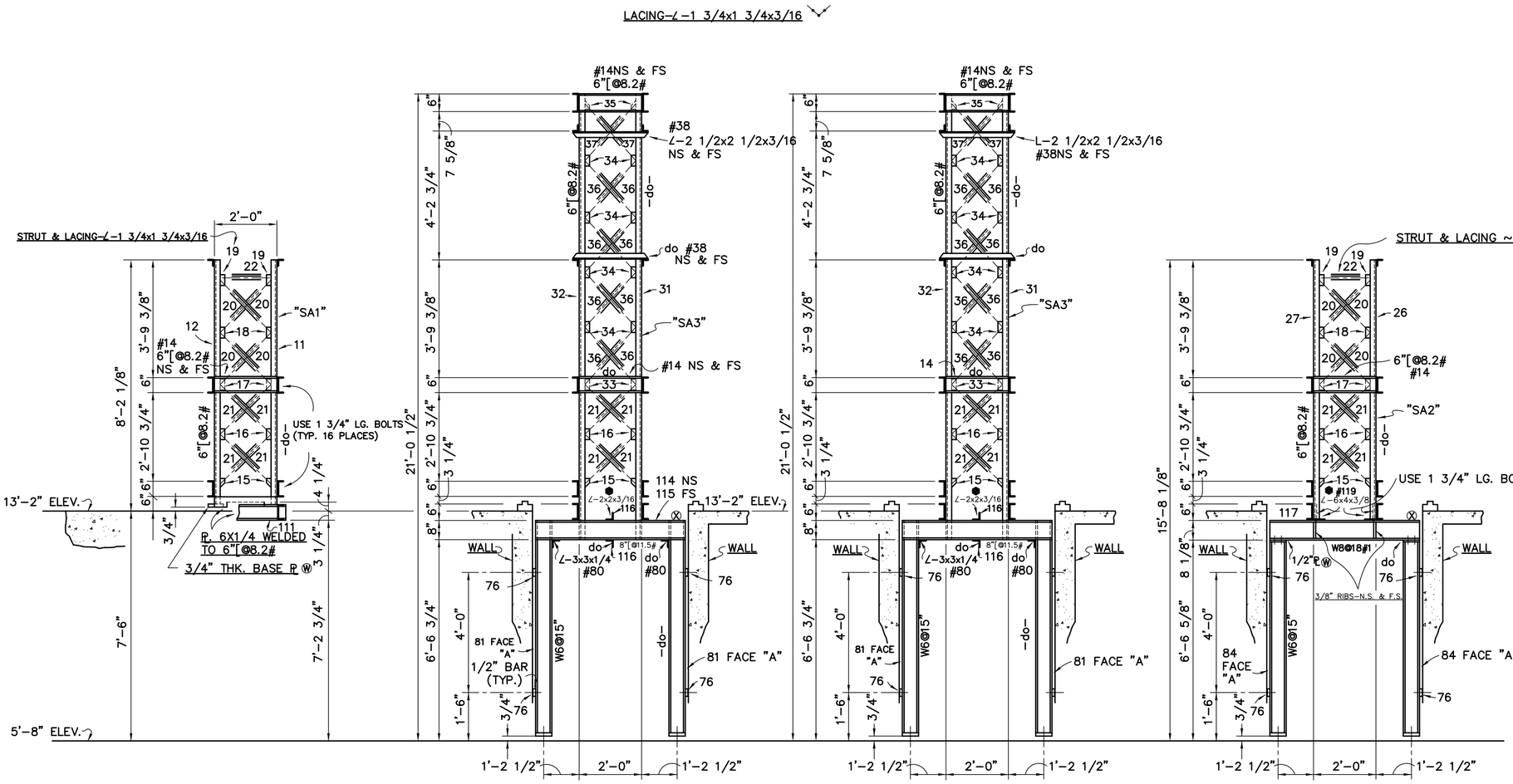

SECTION "GG"

SECTION "HH"

SECTION "JJ"

SECTION "KK"

CONVERTED FROM PAPER TO C.A.D.
* NOT CHECKED *

NOTES–

FOR PLAN VIEW AND NOTES ~ SEE DWG. 425-915 (MD-2949)

FOR ADDITIONAL BRACING AT SEE DWG. 426-418 (MD-2938)

S.O. 45A26300 ~ IT. 1A & 1B

REV.	DESCRIPTION	
02	MAY 8, 1980	RWG
		MF

This drawing is the property of Gould Inc. and contains proprietary and confidential information which must not be duplicated, used, or disclosed other than as expressly authorized by Gould.

ERECTION PLAN
115 KV. CABLE ADDITION TO UNION STREET SUBSTATION (2000 AMP. BUS)
THE CITY OF SEATTLE

GOULD
Gould Inc., Power Systems Division
P.O. Box 98, Greensburg, Pa. 15601
Telephone (412) 834-3300
Manufacturer of I-T-E Equipment

CONVERTED TO CAD BY C.I.T. QC: D.W.H. DATE: 06/12/97 PHONE (206) 467-6832 CONTACT: IVETTE DAMISH

FOR ORIGINAL APPROVAL SIGNATURES/INITIALS AND STAMPS, SEE REV. 0 AND PREVIOUS REV. MICROFILMS.

Scale	=12"			
Assy Dwg				
Group	Dwn	Chkd	Appd	
B	J.E.S.	DB	PHW	425-919

Rev 02

DWG & REV. NO. 425-919

MD-2953

9-15-80

UNLESS OTHERWISE NOTED:
1. DE-BURR ALL SHARP MACHINED CORNERS & EDGES (1/64"R, MAX.)
2. INSIDE, MACHINED CORNERS HAVE 1/32"R.
3. CASTINGS TO BE FREE OF PARTING LINE OR SIMILAR PROJECTIONS.
4. DIMENSIONS MARKED ARE CRITICAL.

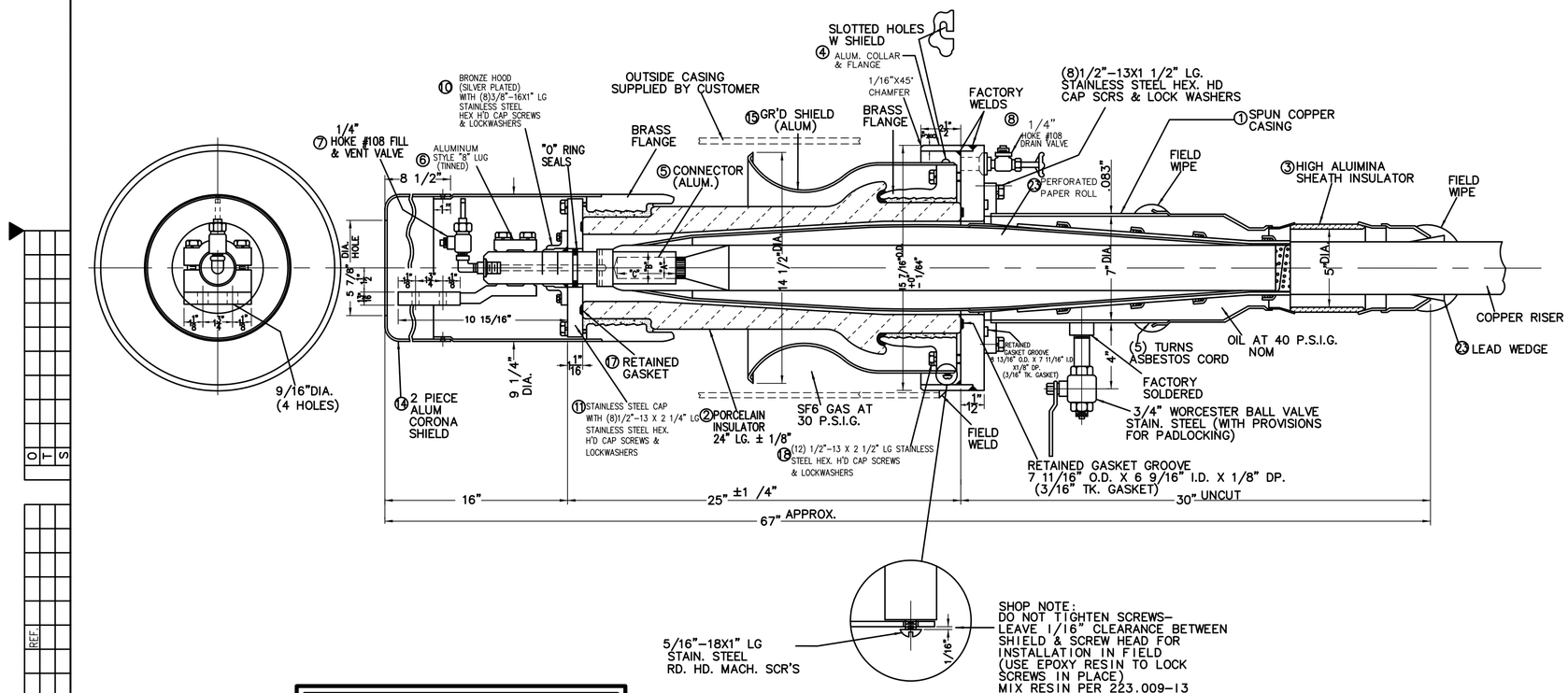

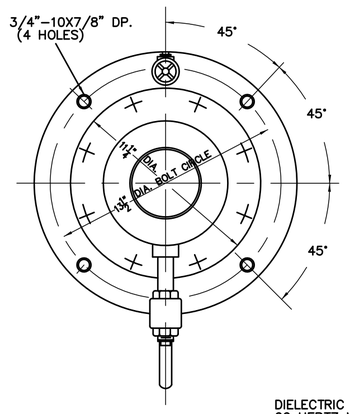

SHOP NOTE:
DO NOT TIGHTEN SCREWS-LEAVE 1/16" CLEARANCE BETWEEN SHIELD & SCREW HEAD FOR INSTALLATION IN FIELD (USE EPOXY RESIN TO LOCK SCREWS IN PLACE) MIX RESIN PER 223.009-13 WITH ROOM TEMP. CURE

DIELECTRIC CHARACTERISTICS
60 HERTZ WITHSTAND 335KV. (DRY)1 MIN.
IMPULSE 1.2X50 WITHSTAND 650KV.

PHYSICAL CHARACTERISTICS
500 P.S.I. PRESSURE TEST-1 HOUR

PRINT IDENTIFICATION
DATE 6-12-79 G & W NO. E40771
CUSTOMER GOULD INC. GREENSBURG, PA.
ORDER NO. L23940
☒ FOR RECORD ITEM NO. 2
☐ FOR APPROVAL NO MORE WORK TO BE DONE-UNTIL APPROVAL IS RECEIVED

COPPER RISER O.D	WIPING SLEEVE OPENING	QT'Y	CUST IT NO	G & W IT NO	CUSTOMERS ORDER NO.	G & W ORDER NO.	CABLE SIZE KCM	FERRULE DIMENSIONS "A" .005	"B" .005	"C"	TYPE OF PRESS	STRESS CONE DRG. NO.
2 9/16"	2 7/8"	3	2	2	L23940	E40771	810 KCM ALUM. COMP. RD.	.965"	1.593	3 3/4"		D50800251000

CONVERTED FROM PAPER TO C.A.D.
* NOT CHECKED *

MD-2954 MF

SURFACE TREATMENT	
INSIDE	OUTSIDE
TOLERANCES UNLESS OTHERWISE SPECIFIED	
DECIMAL	.005"
COMMON	1/54"
FRACTION	1/2"
USED WITH:	
SUB-ASSEM:	
MAIN B/M "B" SIZE B/M	

POTHEAD, TYPE "ATL", MINI-SUB, 138KV. 3000 K.C.M. (MAX.), M.P.O. CABLE (30 P.S.I. NOM. SF6 ENVIRONMENT)

CAT. NO. AT L140N-SF

REVISION	SCALE:	DO NOT SCALE DRAWING
ADDED 11/4" DIA. DIM. 4-24-79 N.U.R.	DRAWN N. J. R. 4-11-79	CH'K'D.
REVISED 6-12-79 N. J. R.	PART STATUS	DRAWING NO.
APPROVED		D72640058000
ENG. WRR 4-16-79 MFG.		

MF

D7264-58

THIS DRAWING AND INFORMATION CONTAINED THEREON ARE AND REMAIN THE PROPERTY OF G & W AND ARE NOT TO BE COPIED, REPRODUCED OR DISCLOSED TO OTHERS WITHOUT THE EXPRESSED WRITTEN CONSENT OF G & W

REVISIONS			
REV	DATE	CK	APP
DR			
W.O.#			
DESCRIPTION			MF

CAD CONVERSION VENDOR: SARA SYSTEMS. INC.TO Q-CAD,INC.
CONTACT PERSON: LISA DORSEY
DATE: MAY 1997
TEL: 1-800-700-3025
ADDRESS: 7101 NORTH MESA,STE.165
EL PASO,TX 79912

FOR ORIGINAL APPROVAL SIGNATURES/ INITIALS AND STAMPS, SEE REV 0 AND PREVIOUS REV.

ENDORSEMENTS
SIGNATURE DATE
DR :
CK :
DSGN:
CK :

CITY OF SEATTLE
CITY LIGHT DEPARTMENT
APPROVED FOR CITY LIGHT DEPARTMENT
DATE

POTHEAD,TYPE "ATL",MINI-SUB, 138KV,3000KCM(MAX),MPO CABLE (30PSI NOM SFG ENVIRON.)

SHEET OF
CLASS.
DRAWING NO. MD-2954
SCALE REV. NO.

UNLESS OTHERWISE NOTED:
1. DE-BURR ALL SHARP MACHINED CORNERS & EDGES (1/64"R, MAX.)
2. INSIDE. MACHINED CORNERS HAVE 1/32"R.
3. CASTING TO BE FRCE OF PARTING LINE OR SIMILAR PROJECTIONS.
4. DIMENSIONS MARKED ARE CRITICAL.

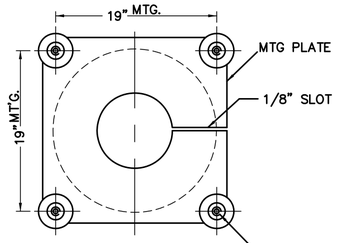

MOUNTING DETAIL

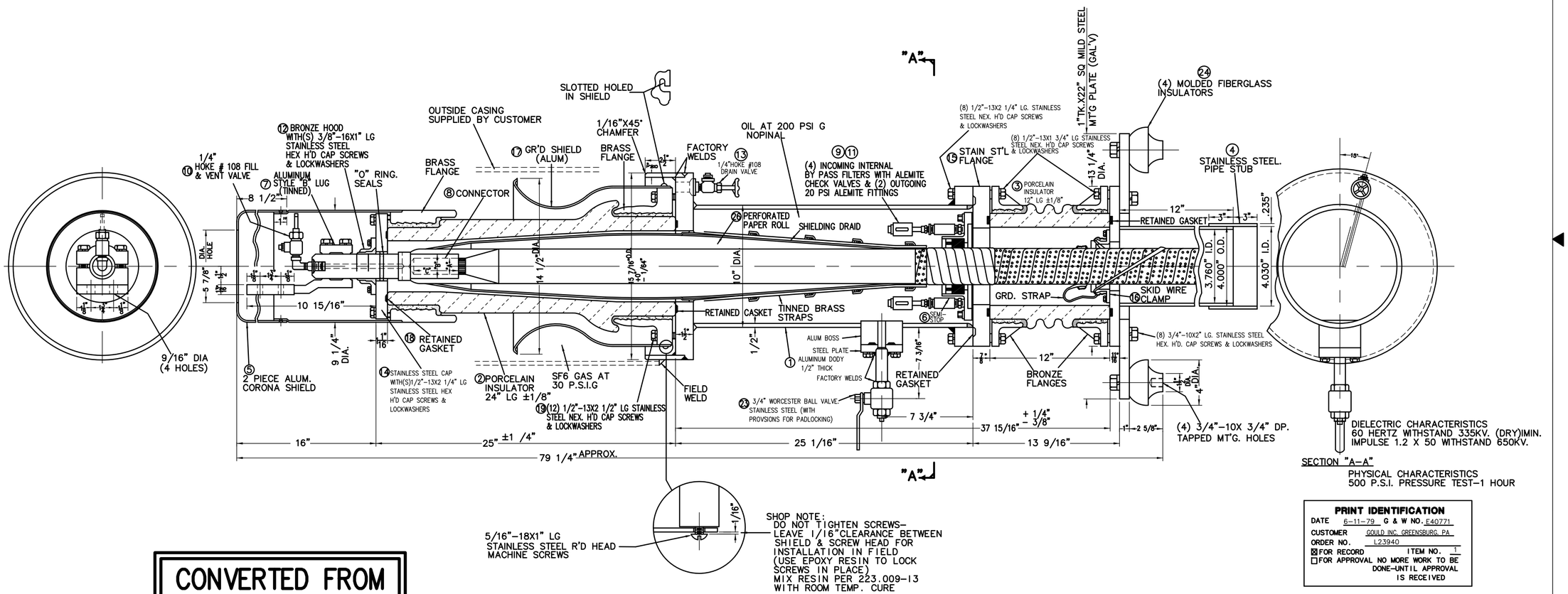

PRINT IDENTIFICATION
DATE 6-11-79 G & W NO. E40771
CUSTOMER GOULD INC. GREENSBURG, PA
ORDER NO. L23940
☒ FOR RECORD ITEM NO. 1
☐ FOR APPROVAL NO MORE WORK TO BE DONE-UNTIL APPROVAL IS RECEIVED

QT'Y	CUST. IN NO	G & W IN NO	CUSTOMERS ORDER NO.	G & W ORDER NO.	CABLE SIZE KCM	FERRULE DIMENSIONS "A" .005"	"B" .005	"C"	TYPE OF PRESSUSED	STRESS CONE DRG. NO	HOLE IN SEMI-STOP GASKET
3	1	1	L23940	E40771	1750 CU. COMP. SEG.	1.490"	1.980"	3 3/4"	G & W 10 TON 4 RAM	D50800239B00	2 3/4"

MD-2955

SURFACE TREATMENT	
INSIDE	OUTSIDE
TOLERANCES UNLESS OTHERWISE SPECIFIED	
DECIMAL	.005"
COMMON	1/54"
FRACTION	1/2"
USED WITH:	
SUB-ASSEM:	
MAIN B/M	"B" SIZE B/M

POTHEAD, TYPE "ATA", MINI-SUB, 138KV. 3000 K.C.M. (MAX.), M.P.O. CABLE (30 P.S.I. NOM. SF6 ENVIRONMENT) NOMINAL OPERATING PRESSURE-200 P.S.I. OIL.

CAT. NO. AT A140N-SF

REVISION	SCALE:	DO NOT SCALE DRAWING
REVISED 6-11-79 N. J. R.	DRAWN N. J. R. 4-11-79	CH'K'D.
	PART STATUS	DRAWING NO.
APPROVED		D72640059000
ENG. WRR 4-16-79	MFG.	

MF

D7264-59

CONVERTED FROM PAPER TO C.A.D.
* NOT CHECKED *

THIS DRAWING AND INFORMATION CONTAINED THEREON ARE AND REMAIN THE PROPERTY OF G & W AND ARE NOT TO BE COPIED. REPRODUCED OR DISCLOSED TO OTHERS WITHOUT THE EXPRESSED WRITTEN CONSENT OF G & W

REVISIONS

REV	DATE	APP
DR	CK.	
W.O. #	DESCRIPTION	

CAD CONVERSION VENDOR: SARA SYSTEMS. INC.TO Q-CAD,INC.
CONTACT PERSON: LISA DORSEY
DATE: MAY 1997
TEL: 1-800-700-3025
ADDRESS: 7101 NORTH MESA,STE.165
EL PASO,TX 79912

FOR ORIGINAL APPROVAL SIGNATURES/ INITIALS AND STAMPS, SEE REV 0 AND PREVIOUS REV.

ENDORSEMENTS

SIGNATURE	DATE
DR :	
CK :	
DSGN:	
CK :	

CITY OF SEATTLE
CITY LIGHT DEPARTMENT
APPROVED FOR CITY LIGHT DEPARTMENT
DATE

SHEET OF
CLASS.
DRAWING NO. MD-2955
SCALE REV. NO.

DWG. NO. 182-237

FORM G1030A

BILL OF MATERIAL

145 KV THREE PHASE 60 HZ (650 KV BIL), 2000 AMP., METAL ENCLOSED, PRESSURIZED "SF6" INSULATED BUS.

SOLD TO: THE CITY OF SEATTLE
UNION STREET SUBSTATION

GOULD S.O. 45A26300 CUSTOMER ORDER 33892

THIS BILL OF MATERIAL CONSISTS OF SHEETS 1 TO 4 INCLUSIVE AND LISTS ALL NECESSARY PARTS FOR THE COMPLETE INSTALLATION OF LISTED SF6 EQUIPMENT FURNISHED BY GOULD INC., POWER SYSTEMS DIV. OF GREENSBURG, PENNSYLVANIA, U.S.A.

REFERENCE DRAWINGS

SINGLE LINE DIAGRAM	425-333
GENERAL ARRANGEMENT	425-335, 425-336, 425-337, 425-338
ANCHOR PLAN	425-339
SWITCH CONTROL	320-268, 425-546, 425-547, 425-548
GAS SYSTEM	425-334
"SF6": GAS MONITORING EQUIPMENT	425-342
MONITOR WIRING DIAGRAM	235-035
BUS REPAIR INSTRUCTIONS	229-712
CONTACT FINGER INSTALLATION TOOL	317-669
145 KV PLUG IN CONTACT	182-238, 316-384, 316-777
BOLTING TORQUES	RP-19-10
CONDUCTOR AND HOUSING ASSEMBLIES	SHEET 4
MISCELLANEOUS PARTS	SHEET 3
SUPPORTING STEEL	SHEET 2
SWITCH CONTROLS	SHEET 4
KEY INTERLOCK DIAGRAM	425-340
INTERLOCK MOUNTING INFORMATION	320-258
MOTOR MECH. SCHEMATIC DIAGRAM	237-895

NOTE: SEE INSTRUCTION BOOK FOR SPECIAL PRECAUTIONS THAT MUST BE TAKEN IN THE WELDING, INSPECTION, CLEANING AND ASSEMBLY OF GAS-INSULATED SYSTEMS TO INSURE RELIABLE PERFORMANCE.

ALL ITEM NO'S. PRECEDED BY THE LETTER [H]

This drawing is the property of Gould Inc. and contains proprietary and confidential information which must not be duplicated, used, or disclosed other than as expressly authorized by Gould.

ASSY	425-337		BILL OF MATERIAL UNION STREET SUBSTATION
DWN	CHKD	APPD	
JdW	J.B	[illegible]	THE CITY OF SEATTLE
SCALE	= 12"		TOLERANCE UNLESS NOTED FRACTIONAL DECIMAL
GROUP	SHEET		REV.
B	1 of 4	182-237	01

01 MAY 15, 1979

GOULD Gould Inc., Power Systems Division

CRYSTAL VELLUM, A&B SMITH CO., PGH., PA. LT1024-1176

MA-1395

BILL OF MATERIAL

ITEM	REQ'D.	DESCRIPTION	DRAWING	FRONT SHEET NO.
1		GALVANIZED STRUCTURAL STEELWORK COMPLETE WITH ERECTION BOLTS, NUTS AND NECESSARY HARDWARE CONSISTING OF THE FOLLOWING:		
1A	1	145 KV SWITCH SUPPORT STRUCTURE	425-915 TO 425-919 INCL	FA1
1A(PART)	1	MISC. BRACING & BRACKETS FOR ITEM 1A	426-418	FA2
1B	1-LOT	GRATING AND MTG. ANGLES FOR TRANSF. (INCLUDED	WITH ITEM # 1A)	

S.O. 45A26300

145 KV SF-6 GAS INSULATED BUS SUPPORT STRUCTURE
UNION STREET SUBSTATION
THE CITY OF SEATTLE

D.O.

01	MAY 15, 1979	ITEMS # 1A & 1B CHECKED & RELEASED TO PRODUCTION RWG
02	SEPT. 12, 1979 PHW	ITEM # 1A (PART) ADDED, CHECKED & RELEASED TO PRODUCTION RWG
03	MAY 15, 1980 PHW	

GOULD

Gould Inc., Power Systems Division
P.O. Box 98, Greensburg, Pa. 15601
Manufacturer of I-T-E Equipment

BY	SPECS	CUST. DWG.	SK.	NEGOTIATION	DATE

B

SHEET 2 OF 4

182 [redacted] 237

REV. 03

M G918 CRYSTAL VELLUM. [illegible] SMITH CO., PGH., PA. LT1024-1176

MA-1396

BILL OF MATERIAL

ITEM	REQ'D.	DESCRIPTION	DRAWING	MK	NOTE	PROC. REF.
2	3	MONITOR SYSTEM "A" DIA. HOLE 3/4"	425-342	501		
6	3	GAS CYLINDERS @ 115# EA. (345#) ASTM-D-	2472-71		Ⓐ	
7	1-GAL	SOLITE #70 CLEANER	169-456	301		RP-18-1
8	2	WASH BOTTLE FOR SOLITE #70	178-400	001		"
9	1-PT.	ALCOA #2 ELECTRIC JOINT COMPOUND				RP-19-9
10	1-PT.	DARINA #2 COMPOUND				RP-12-1
11	1-TUBE	O-RING LUBE DOW CORNING (55M) (5.3 OZ)				RP-19-7
12	1	PORTABLE FILL FILTER ASS'Y.	317-440	302		RP-19-6 RP-18-1
13	1	PALL TRINITY EVAC. FILTER	417052			"
14	4	PLUG-IN CONTACT ASS'Y. 145 KV	316-384	301		RP-18-1
15	2	" " " " (SPECIAL)	182-238	301		"
16	1	CONTACT FINGER ASS'Y. TOOL	317-669	301		"
17	1	ROUNDING TOOL (11" O.D.)	315-327	301		"
18	1	ROUNDING TOOL (16" O.D.)	314-019	301		"
19	1	TROUBLE LIGHT (SW. PORTHOLE VIEWING)	175-146	001		"
20	1-ROLL	3/4" WIDE TEMP-R-TAPE (36 YDS)	880157			RP-19-6
21	1	COVER PLATE (POTHEAD TESTING)	237-877	301		RP-18-1
22	1	BUSHING GROUND TIE	237-952	501		"
23	1	POTHEAD " TIE	237-955	501		"
24	1	TUBE LOCTITE WITH TEFLON (CAT# 9241) (250 cc)				RP-19-5
25	1-ROLL	TEFLON TAPE (FOR PIPE THDS)				"
26	1-LOT	SPARE PARTS	182-356	501		RP-18-1
30	3	G&W POTHEAD, TYPE ATL D# 726400058000, CAT#		ATL 140 N-SF	Ⓑ	
31	3	G&W " " ATA D# 726400059000, CAT#		ATA 140 N-SF	Ⓑ	
32	12	C/T'S. B08-10 SPLIT CORE BUSHING TYPE C/T.		PO# L-24416		

NOTE Ⓐ PURCHASE FROM SPECIALTY CHEMICAL, ALLIED CHEMICAL CORP.

NOTE Ⓑ TO BE SHIPPED DIRECT TO JOB SITE BY G&W. P.O. NO - 23940

145 KV SF-6 GAS INSULATED BUS
MISCELLANEOUS PARTS
UNION STREET SUBSTATION
THE CITY OF SEATTLE

A26300

NO.	DATE	
01	MAY 15, 1979	NOTE Ⓒ REMOVED FROM IT-32 (CT'S) A'DIA. ADDED J.B.
02	AUG. 10, 1979	

P.O.

ma1397

B

GOULD

Gould Inc., Power Systems Division
P.O. Box 98, Greensburg, Pa. 15601
Manufacturer of I-T-E Equipment

BY	SPECS	CUST. DWG.	SK.	NEGOTIATION	DATE
	JB				

SHEET 3 OF 4

182-[redacted]237

REV. 02

FORM G918 CRYSTAL VELLUM. A&B SMITH CO., PGH., PA. LT1024-1176

MA-1397

BILL OF MATERIAL

ITEM	REQ'D.	DESCRIPTION	DRAWING	MK.	NOTE	REF. DWG.
40	1	BREAKER SW.	320-187	301		237-871
41	1	BREAKER SW. W/TAP OUT TOP	"	302		237-872
42	1	BREAKER SW. W/TAP OUT TOP	"	308		237-872
43	1	TEE TAP SW. W/TERMINATOR	"	303		237-873
44	1	TEE TAP SW. W/TERMINATOR	"	304		237-874
45	1	TEE TAP SW. W/TERMINATOR & TAP OUT TOP	"	305		237-875
46	6	POTHEAD HSG. ASS'Y.	"	306		237-880
47	3	AIR BUSHING ASS'Y.	"	307		237-881
48	15	MOTOR MECH. (125 VDC)	237-954	301		
49	1-LOT	SW. CONTROL PARTS	320-268	501	→	425-547 425-548 425-546
		SHIPPING COVERS (A)				
	6	SHIPPING COVER	316-162	312		
	4	" "	"	306		
	2	" "	316-162	302		
	6	" "	237-692	501		
	1	ROUNDING TOOL 11" OD	315-327	301		
	1	" " 16" OD	314.019	301		

(A) TO BE RETURNED TO GOULT, INC. GREENSBURG, PA. FOR CREDIT AFTER JOB COMPLETION

145 KV SF-6 GAS INSULATED BUS
SHIPPING SECTIONS
UNION STREET SUBSTATION
THE CITY OF SEATTLE

A26300

UNION STREET

NO.	DATE	DESCRIPTION
01	MAY 15, 1979	SHIPPING COVERS & ROUNDING TOOLS ADDED
02	NOV. 28, 1979	

D.O.

GOULD

Gould Inc., Power Systems Division
P.O. Box 98, Greensburg, Pa. 15601
Manufacturer of I-T-E Equipment

BY	SPECS	CUST. DWG.	SK.	NEGOTIATION	DATE
JB	mc				

B | SHEET 4 OF 4 | 182 237 | REV. 02

DWG. NO. 182-238

FORM G1030B

MK. 301: MAKE FROM DWG.# 316-384-301, EXCEPT:
OMIT - IT. 5, CORONA SHIELD, DWG. 228-238-001.
ADD - IT. 5, CORONA SHIELD, DWG. 237-882-001.

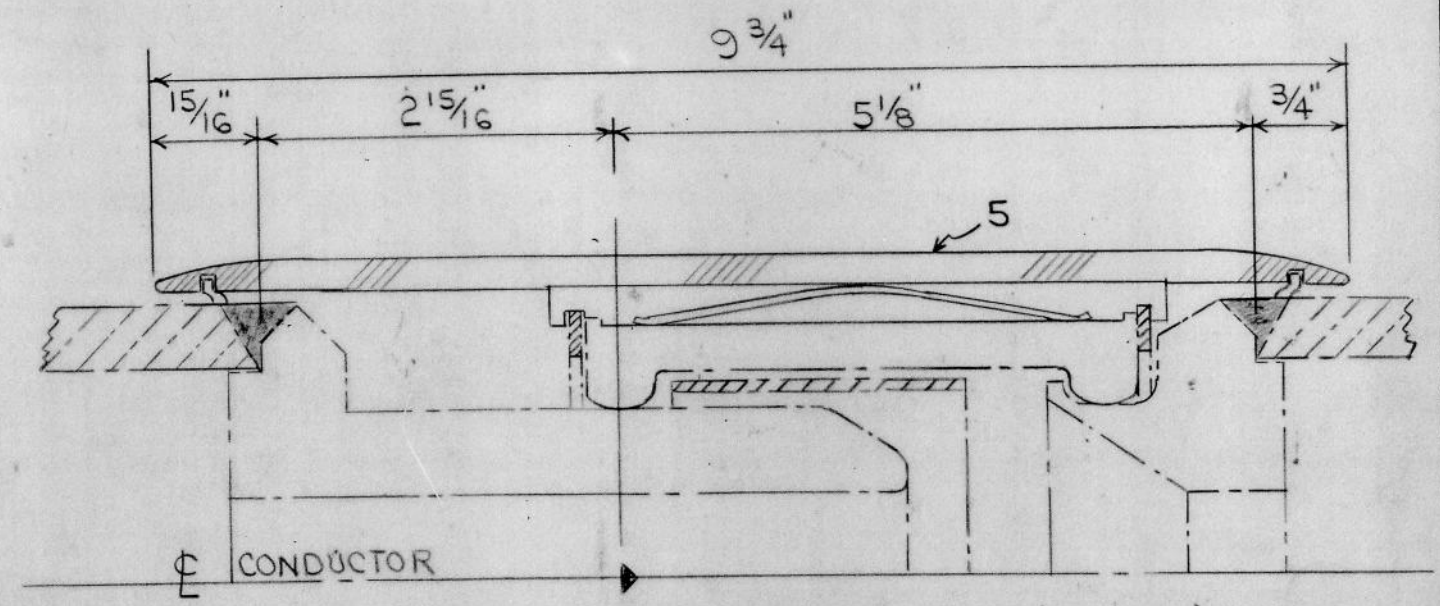

UNION ST

A26300

This drawing is the property of Gould Inc. and contains proprietary and confidential information which must not be duplicated, used, or disclosed other than as expressly authorized by Gould.

ASSY	316-384		MODIFICATION TO ST'D. PLUG-IN CONN. FOR 145 KV
DWN	CHKD	APPD	
JdW	JB		
SCALE	= 12"		TOLERANCE UNLESS NOTED FRACTIONAL DECIMAL
GROUP	SHEET		REV.
B	OF	182-238	01

01 MAY 15, 1979 MDR STD.

GOULD Gould Inc., Power Systems Division

POLYBLU. A&B SMITH CO. ...SH, PA.

MA-1399