## GENERAL NOTES:

1. DRAWINGS TB-4179 THRU TB-4200 ARE PART OF POLE SPECIFICATION 3538.
2. DESIGNATION (X) ON DRAWINGS TB-4179 THRU TB-4187 REFERS TO ITEMS DETAILED ON DRAWINGS TB-4188 THRU TB-4200.
3. SYMBOL △ NOTED ON DRAWINGS REFERS TO CONTROL POINTS FOR THE ATTACHED ITEMS.
4. A "0 REFERENCE ANGLE" INDICATOR SHALL BE PERMANENTLY PLACED ON TOP OF THE BASE PLATES AND ON TOP OF ANCHOR BOLT RING PLATES TO FACILITATE INSTALLATION OF FOUNDATION AND POLE. SEE THE TECHNICAL SPECIFICATIONS.
5. PICK UP POINTS OF THE POLES SHALL BE IDENTIFIED ON THE MANUFACTURER'S DRAWINGS.
6. THE STRUCTURES SHALL BE DESIGNED IN ACCORDANCE WITH THE CURRENT EDITION OF THE NATIONAL ELECTRICAL SAFETY CODE (NESC), THE AISC MANUAL NO. 72 ON "DESIGN OF STEEL TRANSMISSION POLE STRUCTURES" AND THIS POLE SPECIFICATION.
7. POLE EMBEDMENT LENGTH = 0.0 FEET FOR DESIGN OF POLES.
8. DESIGN LOADS SHOWN ON SPECIFICATION DRAWINGS INCLUDE NESC LOAD FACTORS.

8a. BROKEN CONDUCTOR COMBINATIONS SHALL INCLUDE THE FOLLOWING COMBINATIONS:

1. ONE BROKEN SHIELD OR OPGW, ALL OTHER INTACT
2. BROKEN SHIELD AND BROKEN OPGW, ALL OTHER INTACT
3. BROKEN OPGW AND TOP 230KV PHASE ON SAME SIDE AS OPGW, ALL OTHER INTACT
4. BROKEN OPGW AND TOP 230KV PHASE ON OPPOSITE SIDE, ALL OTHER INTACT
5. TOP TWO 230KV PHASES ON SAME SIDE, ALL OTHER INTACT
6. TOP 230KV PHASES ON OPPOSITE SIDES, ALL OTHER INTACT

SEE LOAD TREES FOR FORCE MAGNITUDES.

9. TRANSVERSE AND LONGITUDINAL LOADS INCLUDE LINE DEFLECTION ANGLE COMPONENT.
10. WIND ON STRUCTURE LOAD, Wp, IN THE POSITIVE AND NEGATIVE TRANSVERSE DIRECTION, SHALL BE ON THE PROJECTED AREA OF A CIRCULAR POLE WITH DRAG COEFFICIENT =1.0.
11. DEAD LOAD – THE STRUCTURE DEAD WEIGHT SHALL BE INCLUDED SIMULTANEOUSLY WITH ALL OTHER LOADS IN THE STRUCTURE DESIGN. THIS VERTICAL LOAD SHALL BE MULTIPLIED BY THE FOLLOWING FACTORS:

| LOADING CASE | LF (LOAD FACTOR) |
|---|---|
| NESC MEDIUM LOAD | 1.5 |
| EXTREME WIND AND EXTREME ICE W/WIND | 1.25 |

12. VERTICAL LOADS INCLUDE WEIGHT OF INSULATORS.

## GENERAL NOTES (CONT.):

13. GROUNDING LUG ON EACH POLE, ITEM 12 SEE TB-4200.
14. FAA BEACON MOUNT BRACKET SHALL BE PROVIDED ON EACH POLE, SEE TB-4194.
15. CONDUCTORS

A. **FIBER OPTIC CABLE**
OPGW, BARE DIA. = 0.913", BARE WT. = 0.916 LB/FT. MAXIMUM TENSION: NESC MEDIUM LOAD = 9,000 LBS (14,850 W/LF). ALCOA CHART NO. 1-917.

B. **SHIELD WIRE**
20M ALUMOWELD, BARE DIA. = 0.444", BARE WT. = 0.347 LB/FT. MAXIMUM WORKING TENSION: NESC MEDIUM LOAD = 6,000 LBS (9,900 LBS W/LF)

C. **230KV TRANSMISSION CONDUCTOR (NORTH POLE)**
ACSR 795 MCM "MALLARD", BARE DIA. = 1.14", BARE WT. = 1.235 LB/FT. MAXIMUM TENSION: NESC MEDIUM LOAD = 9,000 LBS (14,850 W/LF).

D. **230KV TRANSMISSION CONDUCTOR (SOUTH POLE)**
ACSR 795 MCM "MALLARD", BARE DIA. = 1.14", BARE WT. = 1.235 LB/FT. MAXIMUM TENSION: NESC MEDIUM LOAD = 9,000 LBS (14,850 W/LF).

E. **26KV PRIMARY CONDUCTOR**
ACSR 954 MCM "RAIL", BARE DIA. = 1.165", BARE WT. = 1.075 LB/FT. MAXIMUM TENSION: NESC MEDIUM LOAD = 8,000 LBS. (13,200 W/LF)

F. **NEUTRAL CONDUCTOR**
ACSR 397.5 MCM "IBIS", BARE DIA. = 0.783", BARE WT. = 0.5469 LB/FT. MAXIMUM TENSION: NESC MEDIUM LOAD = 4,000 LBS. (6,600 W/LF)

16. AN IDENTIFICATION PLATE WITH THE FOLLOWING INFORMATION SHALL BE WELDED TO THE POLE AT APPROX. 5' ABOVE BASE PLATE ON THE 0° REFERENCE LINE.

- MANUFACTURE NAME
- JOB #
- DATE
- SCL POLE #
- HEIGHT
- WEIGHT
- DESIGN GROUND LINE MOMENT.

## REFERENCES:

SPECIFICATION 3538.

ONE INCH
AT FULL SIZE

**REVISIONS**

| REV | DATE | MF |
|---|---|---|
| DR | CK | APP |
| W.O. # | | |
| 0 | 04/26/11 | |
| VWD | W.O. # 1827201 | |

DESCRIPTION

IRVING SEITOKU OGI
STATE OF WASHINGTON
23207
STRUCTURAL ENGINEER
PROFESSIONAL ENGINEER
10-14-11

**Seattle City Light**

| SIGNATURE | | DATE |
|---|---|---|
| DR | : V. DONG | 04/26/2011 |
| CK | : | |
| DSGN | : | 10/14/11 |
| CK | : | |
| APP | : | 10/14/11 |

# OVERHEAD TRANSMISSION
## SOUTH TRANSMISSION
## DUWAMISH TO CRESTON
## 230KV - 26KV STEEL POLES
## GENERAL NOTES

SHEET 1 OF 23
CLASS **S-1**
DRAWING NO. **TB-4178**
SCALE **AS NOTED**
REV. NO. **0**

I:\OU_293\WHH\NORMAN\DUWA TO CRESTON\TB-4178.dwg
dongv Oct/14/2011 7:48am

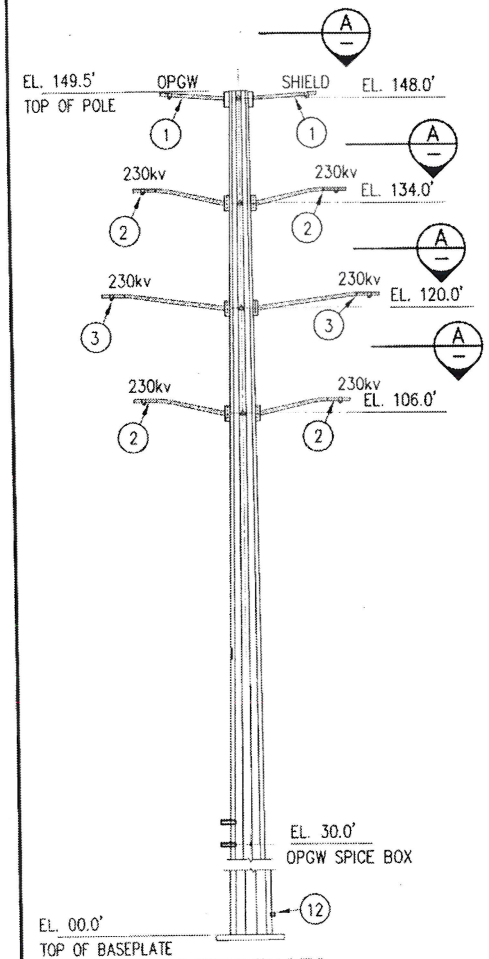


## REFERENCES:

N.T.S.

6. FOR LADDER BRACKET SEE TB-4196.
7. FOR SAFETY CABLE BRACKET SEE TB-4197.
8. FOR ATTACHMENTS NEAR POLE TOP SEE TB-4194
9. FOR BROKEN CONDUCTOR LOAD CASE SEE TB-4178, NOTE 8a.

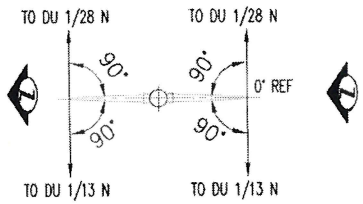


PLAN A

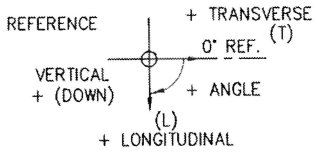


## LOADING REFERENCE

OPGW LOAD: @ ELV. 148.0'

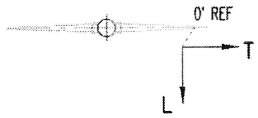


SHIELD LOAD: @ ELV. 148.0'

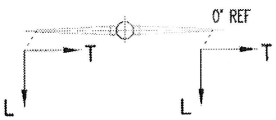


230kv LOAD: @ ELV. 134.0', 120.0' @ 106.0'

## LOADING PLANS

## NOTES

1. FOR GENERAL NOTES, SEE TB-4178.
2. ITEM DESIGNATED (X) ARE SHOWN ON TB-4188 TO TB-4200.
3. DEFLECTION CRITERIA: MAX. DEFLECTION AT TOP OF POLE <1% OF POLE LENGTH FOR NESC MEDIUM UNFACTORED LOAD CASE.
4. NO POLE CAMBER ALLOWED.
5. FOR JACKING NUTS, SEE TB-4200.

| POLE DU 1/24 N TANGENT STRUCTURE (DOUBLE DEADEND) (1 REQ'D) | | | LOAD CASE (LOADS INCLUDE LOAD FACTORS, LBS) 1 NESC MEDIUM | 2 NESC EX-WIND | 3 NESC EXT ICE & WIND | 4 BROKEN (SEE NOTE 9) | 5 NESC MEDIUM UNFAC |
|---|---|---|---|---|---|---|---|
| OPGW EL. 148.00' | TRANSVERSE | (T) | -672 | -887 | -103 | | -238 |
| | LONGITUDINAL | (L) | 1015 | 905 | 321 | 216 | 615 |
| | VERTICAL | (V) | 1215 | 555 | 815 | 545 | 810 |
| OPGW EL. 148.00' BROKEN | TRANSVERSE | (T) | – | – | – | 0 | – |
| | LONGITUDINAL | (L) | – | – | – | 12041 | – |
| | VERTICAL | (V) | – | – | – | 360 | – |
| SHIELD EL. 148.00' | TRANSVERSE | (T) | -407 | -381 | -94 | -86 | -163 |
| | LONGITUDINAL | (L) | 0 | 0 | 110 | 306 | 0 |
| | VERTICAL | (V) | 549 | 266 | 377 | 263 | 366 |
| SHIELD EL. 148.00' BROKEN | TRANSVERSE | (T) | – | – | – | -41 | – |
| | LONGITUDINAL | (L) | – | – | – | 9218 | – |
| | VERTICAL | (V) | – | – | – | 147 | – |
| MALLARD 230KV EL. 134.00', 120.00, 106.00' | TRANSVERSE | (T) | -1239 | -1417 | -372 | -453 | -551 |
| | LONGITUDINAL | (L) | -70 | 350 | -331 | -441 | -40 |
| | VERTICAL | (V) | 3112 | 1742 | 2073 | 1731 | 2074 |
| MALLARD 230KV BROKEN EL. 134.00', 120.00 | TRANSVERSE | (T) | – | – | – | -76 | – |
| | LONGITUDINAL | (L) | – | – | – | 12159 | – |
| | VERTICAL | (V) | – | – | – | 701 | – |
| RAIL S 26KV EL. 90.00' | TRANSVERSE | (T) | -1465 | -1207 | -616 | -708 | -774 |
| | LONGITUDINAL | (L) | -8615 | -4635 | -4971 | -3525 | -5214 |
| | VERTICAL | (V) | 1522 | 822 | 1012 | 715 | 1014 |
| RAIL N 26KV EL. 80.00' | TRANSVERSE | (T) | -2554 | -1202 | -1340 | -864 | -1462 |
| | LONGITUDINAL | (L) | -8844 | -5671 | -4904 | -4179 | -5355 |
| | VERTICAL | (V) | 1358 | 563 | 935 | 501 | 905 |
| NEUTRAL EL. 70.00' | TRANSVERSE | (T) | -3014 | -1333 | -1690 | -1613 | -1766 |
| | LONGITUDINAL | (L) | -2775 | -2239 | -1149 | -1058 | -1677 |
| | VERTICAL | (V) | 891 | 381 | 664 | 361 | 595 |
| WIND ON POLE | Wp | (PSF) | 10.00 | 18.50 | 2.30 | 4.00 | 4.00 |

ONE INCH AT FULL SIZE

REVISIONS

| REV | DATE | DESCRIPTION |
|---|---|---|
| 0 | 04/26/11 | |

DR CK APP MF
W.O. #
VWD W.O. # 1827201

IRVING SEITOKU OGI — STATE OF WASHINGTON — 23207 — STRUCTURAL ENGINEER — PROFESSIONAL ENGINEER — 10-14-11

Seattle City Light

| SIGNATURE | | DATE |
|---|---|---|
| DR : | V. DONG | 04/26/2011 |
| CK : | | |
| DSGN : | | 10/14/11 |
| CK : | | |
| APP : | | 10/14/11 |

# OVERHEAD TRANSMISSION
## SOUTH TRANSMISSION
## DUWAMISH TO CRESTON
## 230KV-26 KV POLE # DU 1/24 N
## DESIGN LOADING

SHEET 2 OF 23

CLASS S-2

DRAWING NO. TB-4179

SCALE AS NOTED

REV. NO. 0

E:\DU_293\VINH\NORMAN\DUWM TO CRESTON\TB-4179.dwg
dongv Oct/14/2011 6:28am

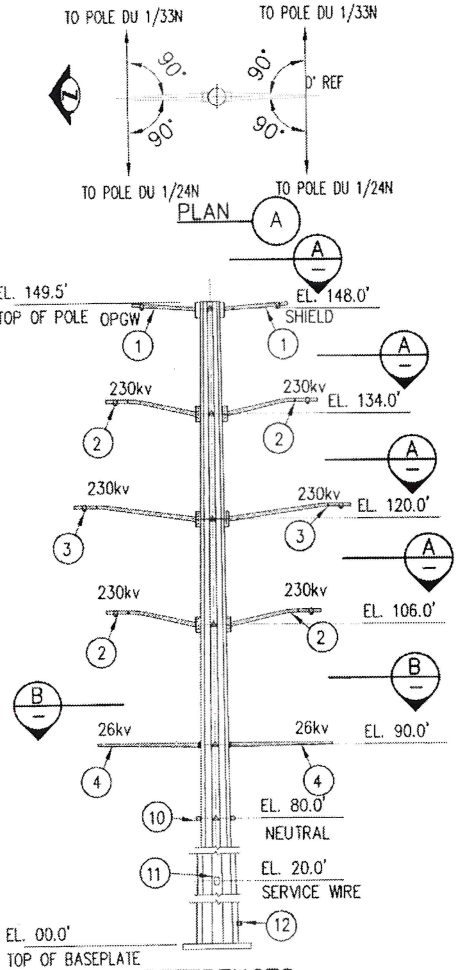


## REFERENCES:

N.T.S.

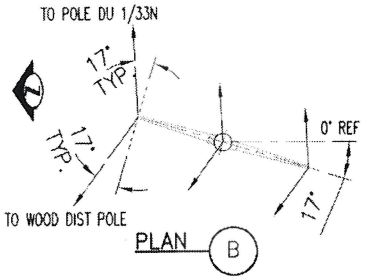


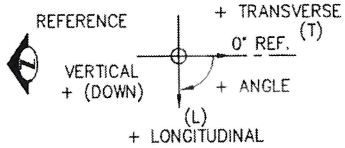


## LOADING REFERENCE

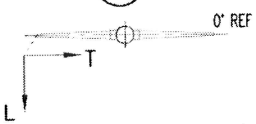


OPGW LOAD: @ ELV. 148.0'

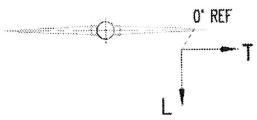


SHIELD LOAD: @ ELV. 148.0'

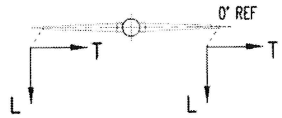


230kv LOAD: @ ELV. 134.0', 120.0' @ 106.0'

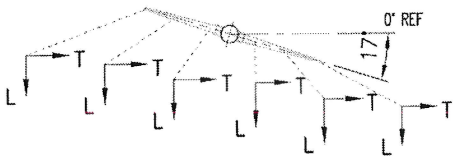


26kv LOAD: @ ELV. 90.0'

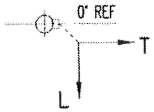


NEUTRAL LOAD: @ ELV. 80.0'

## LOADING PLANS

## NOTES

1. FOR GENERAL NOTES, SEE TB-4178.
2. ITEM DESIGNATED (X) ARE SHOWN ON TB-4188 TO TB-4200.
3. DEFLECTION CRITERIA: MAX. DEFLECTION AT TOP OF POLE <1% OF POLE LENGTH FOR NESC MEDIUM UNFACTORED LOAD CASE.
4. NO POLE CAMBER ALLOWED.
5. FOR JACKING NUTS, SEE TB-4200.
6. FOR LADDER BRACKET SEE TB-4196.
7. FOR SAFETY CABLE BRACKET SEE TB-4197.
8. FOR ATTACHMENTS NEAR POLE TOP SEE TB-4194
9. FOR BROKEN CONDUCTOR LOAD CASE SEE TB-4178, NOTE 8a.
10. FOR SERVICE WIRE BRACKET SEE TB-4193.

| POLE DU 1/28 N TANGENT STRUCTURE (1 REQ'D) | | | LOAD CASE (LOADS INCLUDE LOAD FACTORS, LBS.) | | | | |
|---|---|---|---|---|---|---|---|
| | | | 1 NESC MEDIUM | 2 NESC EX-WIND | 3 NESC EXT ICE & WIND | 4 BROKEN (SEE NOTE 9) | 5 NESC MEDIUM UNFAC |
| OPGW EL. 148.00' | TRANSVERSE | (T) | -568 | -654 | -133 | 140 | -228 |
| | LONGITUDINAL | (L) | 0 | 0 | 0 | 0 | 0 |
| | VERTICAL | (V) | 648 | 253 | 419 | 262 | 432 |
| OPGW EL. 148.00' BROKEN | TRANSVERSE | (T) | -- | -- | -- | -78 | -- |
| | LONGITUDINAL | (L) | -- | -- | -- | 11825 | -- |
| | VERTICAL | (V) | -- | -- | -- | 203 | -- |
| SHIELD EL. 148.00' | TRANSVERSE | (T) | -394 | -344 | -90 | 80 | -157 |
| | LONGITUDINAL | (L) | 0 | 0 | 0 | 0 | 0 |
| | VERTICAL | (V) | 395 | 144 | 250 | 149 | 264 |
| SHIELD EL. 148.00' BROKEN | TRANSVERSE | (T) | -- | -- | -- | -41 | -- |
| | LONGITUDINAL | (L) | -- | -- | -- | 8912 | -- |
| | VERTICAL | (V) | -- | -- | -- | 130 | -- |
| MALLARD 230KV EL. 134.00', 120.00, 106.00' | TRANSVERSE | (T) | -712 | -927 | -166 | 200 | -280 |
| | LONGITUDINAL | (L) | 0 | 167 | -95 | -137 | 0 |
| | VERTICAL | (V) | 2379 | 1363 | 1580 | 1377 | 1586 |
| MALLARD 230KV BROKEN EL. 134.00' 120.00' | TRANSVERSE | (T) | -- | -- | -- | -111 | -- |
| | LONGITUDINAL | (L) | -- | -- | -- | 11903 | -- |
| | VERTICAL | (V) | -- | -- | -- | 769 | -- |
| RAIL 26KV EL. 90.00' | TRANSVERSE | (T) | -1996 | -1415 | -937 | -1046 | -1108 |
| | LONGITUDINAL | (L) | -6917 | -3637 | -4094 | -2973 | -4184 |
| | VERTICAL | (V) | 1544 | 844 | 1031 | 707 | 1030 |
| RAIL 26KV EL. 90.00' | TRANSVERSE | (T) | -1662 | -1105 | -786 | -754 | -921 |
| | LONGITUDINAL | (L) | -8588 | -4782 | -4981 | -3739 | -5200 |
| | VERTICAL | (V) | 1590 | 821 | 1071 | 660 | 1080 |
| NEUTRAL EL. 80.00' | TRANSVERSE | (T) | -484 | -549 | -111 | -120 | -193 |
| | LONGITUDINAL | (L) | 0 | 51 | -81 | -90 | 0 |
| | VERTICAL | (V) | 716 | 313 | 477 | 301 | 477 |
| WIND ON POLE | Wp (PSF) | | 10.00 | 18.50 | 2.30 | 4.00 | 4.00 |

| ONE INCH AT FULL SIZE | REVISIONS | | | | | |
|---|---|---|---|---|---|---|
| | REV | DATE | MF | DESCRIPTION | W.O. # | |
| | DR | CK | APP | | | |
| | 0 | 04/26/11 | | | VWD | W.O. # 1827201 |

IRVING SELTON OGI — STATE OF WASHINGTON — 23207 — STRUCTURAL ENGINEER — PROFESSIONAL ENGINEER — 10-14-11

| Seattle City Light | | |
|---|---|---|
| SIGNATURE | | DATE |
| DR : | V. DONG | 04/26/2011 |
| CK : | | |
| DSGN : | I. Ogi | 10/14/11 |
| CK : | | |
| APP : | Irving Ogi | 10/14/11 |

# OVERHEAD TRANSMISSION
## SOUTH TRANSMISSION
## DUWAMISH TO CRESTON
## 230KV-26 KV POLE # DU 1/28 N
## DESIGN LOADING

SHEET 3 OF 23

CLASS **S-3**

DRAWING NO. **TB-4180**

SCALE: AS NOTED

REV. NO. 0

I:\DU_293\VINH\NORMAN\DUWA TO CRESTON\TB-4180.dwg
dongv Oct/14/2011 6:28am

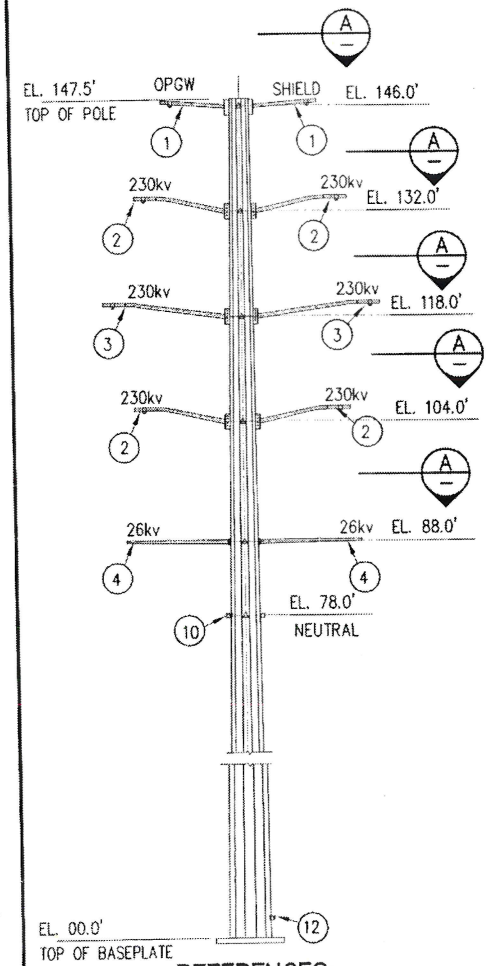


## REFERENCES:

N.T.S.

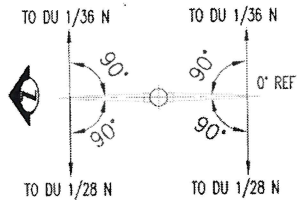


PLAN A

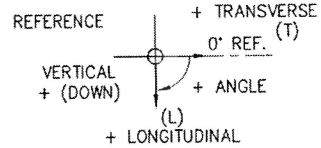


## LOADING REFERENCE

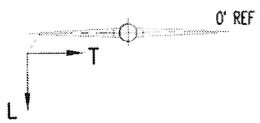


OPGW LOAD: @ ELV. 146.0'

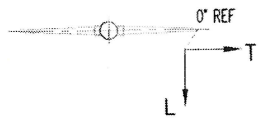


SHIELD LOAD: @ ELV. 146.0'

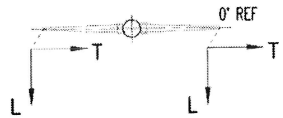


230kv LOAD: @ ELV. 132.0', 118.0' @ 104.0'

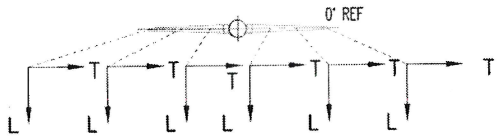


26kv LOAD: @ ELV. 88.0'

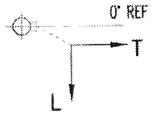


NEUTRAL LOAD: @ ELV. 78.0'

## LOADING PLANS

## NOTES

1. FOR GENERAL NOTES, SEE TB-4178.
2. ITEM DESIGNATED (X) ARE SHOWN ON TB-4188 TO TB-4200.
3. DEFLECTION CRITERIA: MAX. DEFLECTION AT TOP OF POLE <1% OF POLE LENGTH FOR NESC MEDIUM UNFACTORED LOAD CASE.
4. NO POLE CAMBER ALLOWED.
5. FOR JACKING NUTS, SEE TB-4200.
6. FOR LADDER BRACKET SEE TB-4196.
7. FOR SAFETY CABLE BRACKET SEE TB-4197.
8. FOR ATTACHMENTS NEAR POLE TOP SEE TB-4194
9. FOR BROKEN CONDUCTOR LOAD CASE SEE TB-4178, NOTE 8a.

| POLE DU 1/33 N TANGENT STRUCTURE (1 REQ'D) | | | LOAD CASE (LOADS INCLUDE LOAD FACTORS, LBS.) | | | | |
|---|---|---|---|---|---|---|---|
| | | | 1 NESC MEDIUM | 2 NESC EX-WIND | 3 NESC EXT ICE & WIND | 4 BROKEN (SEE NOTE 9) | 5 NESC MEDIUM UNFAC |
| OPGW EL. 146.00' | TRANSVERSE | (T) | 446 | 509 | 107 | 122 | 181 |
| | LONGITUDINAL | (L) | 0 | 0 | 0 | 0 | 0 |
| | VERTICAL | (V) | 672 | 319 | 457 | 312 | 448 |
| OPGW EL. 146.00' BROKEN | TRANSVERSE | (T) | -- | -- | -- | 52 | -- |
| | LONGITUDINAL | (L) | -- | -- | -- | -11825 | -- |
| | VERTICAL | (V) | -- | -- | -- | 86 | -- |
| SHIELD EL. 146.00' | TRANSVERSE | (T) | 297 | 262 | 65 | 51 | 117 |
| | LONGITUDINAL | (L) | 0 | 0 | 0 | 0 | 0 |
| | VERTICAL | (V) | 425 | 204 | 293 | 201 | 283 |
| SHIELD EL. 146.00' BROKEN | TRANSVERSE | (T) | -- | -- | -- | 18 | -- |
| | LONGITUDINAL | (L) | -- | -- | -- | -8912 | -- |
| | VERTICAL | (V) | -- | -- | -- | 55 | -- |
| MALLARD 230KV EL. 132.00', 118.00, 104.00' | TRANSVERSE | (T) | 541 | 718 | 121 | 169 | 214 |
| | LONGITUDINAL | (L) | -35 | 391 | -218 | -339 | -21 |
| | VERTICAL | (V) | 2279 | 1351 | 1522 | 1334 | 1519 |
| MALLARD 230KV BROKEN EL. 132.00' 118.00' | TRANSVERSE | (T) | -- | -- | -- | 71 | -- |
| | LONGITUDINAL | (L) | -- | -- | -- | -12379 | -- |
| | VERTICAL | (V) | -- | -- | -- | 556 | -- |
| RAIL 26KV EL. 88.00' | TRANSVERSE | (T) | 525 | 694 | 121 | 153 | 210 |
| | LONGITUDINAL | (L) | 0 | 549 | -215 | 54 | 0 |
| | VERTICAL | (V) | 1128 | 580 | 754 | 562 | 752 |
| NEUTRAL EL. 78.00' | TRANSVERSE | (T) | 381 | 428 | 88 | 95 | 152 |
| | LONGITUDINAL | (L) | -16 | 222 | -205 | -260 | -10 |
| | VERTICAL | (V) | 551 | 245 | 368 | 232 | 367 |
| WIND ON POLE | Wp (PSF) | | 10.00 | 18.50 | 2.30 | 4.00 | 4.00 |

ONE INCH AT FULL SIZE

REVISIONS

| REV | DATE | MF |
|---|---|---|
| DR | CK | APP |
| W.O. # | DESCRIPTION | |
| 0 | 04/26/11 | |
| VWD | W.O. # 182720' | |

IRVING SEITOKAS OGI
STATE OF WASHINGTON
23207
STRUCTURAL ENGINEER
PROFESSIONAL ENGINEER
10/14/11

Seattle City Light

| SIGNATURE | | DATE |
|---|---|---|
| DR | : V. DONG | 04/26/2011 |
| CK | : | |
| DSGN | : | 10/14/11 |
| CK | : | |
| APP | : | 10/14/11 |

# OVERHEAD TRANSMISSION
## SOUTH TRANSMISSION
## DUWAMISH TO CRESTON
## 230KV-26 KV POLE # DU 1/33 N
## DESIGN LOADING

SHEET 4 OF 23

CLASS S-4

DRAWING NO. TB-4181

SCALE AS NOTED

REV. NO. 0

E:\DU_293\VINH\NORMAN\DUWM TO CRESTON\TB-4181.dwg
dongv Oct/14/2011 6:28am

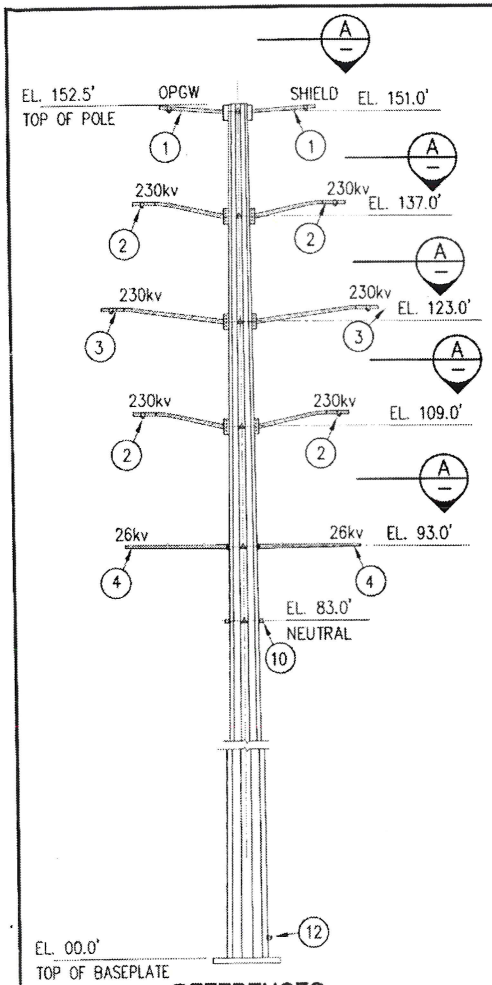


## REFERENCES:

N.T.S.

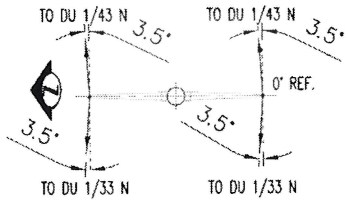


PLAN A

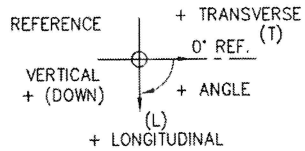


## LOADING REFERENCE

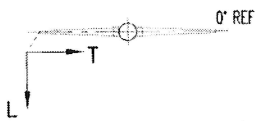


OPGW LOAD: @ ELV. 151.0'

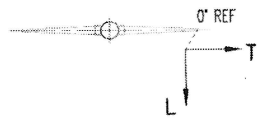


SHIELD LOAD: @ ELV. 151.0'

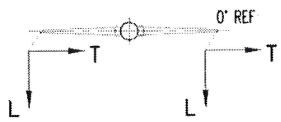


230kv LOAD: @ ELV. 137.0', 123.0' @ 109.0'

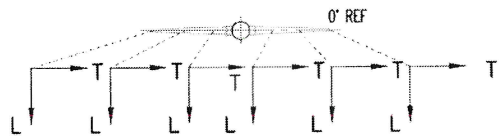


26kv LOAD: @ ELV. 93.0'

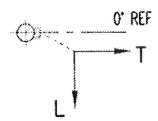


NEUTRAL LOAD: @ ELV. 83.0'

## LOADING PLANS

## NOTES

1. FOR GENERAL NOTES, SEE TB-4178.
2. ITEM DESIGNATED ( X ) ARE SHOWN ON TB-4188 TO TB-4200.
3. DEFLECTION CRITERIA: MAX. DEFLECTION AT TOP OF POLE <1% OF POLE LENGTH FOR NESC MEDIUM UNFACTORED LOAD CASE.
4. NO POLE CAMBER ALLOWED.
5. FOR JACKING NUTS, SEE TB-4200.
6. FOR LADDER BRACKET SEE TB-4196.
7. FOR SAFETY CABLE BRACKET SEE TB-4197.
8. FOR ATTACHMENTS NEAR POLE TOP SEE TB-4194
9. FOR BROKEN CONDUCTOR LOAD CASE SEE TB-4178, NOTE 8a.

| POLE DU 1/36 N TANGENT STRUCTURE (1 REQ'D) | | | LOAD CASE (LOADS INCLUDE LOAD FACTORS, LBS.) | | | | |
|---|---|---|---|---|---|---|---|
| | | | 1 NESC MEDIUM | 2 NESC EX-WIND | 3 NESC EXT ICE & WIND | 4 BROKEN (SEE NOTE 9) | 5 NESC MEDIUM UNFAC |
| OPGW EL. 151.00' | TRANSVERSE | (T) | -1228 | -333 | -907 | -1405 | -850 |
| | LONGITUDINAL | (L) | 0 | 0 | 0 | 0 | 0 |
| | VERTICAL | (V) | 656 | 275 | 432 | 279 | 437 |
| OPGW EL. 151.00' BROKEN | TRANSVERSE | (T) | -- | -- | -- | -678 | -- |
| | LONGITUDINAL | (L) | -- | -- | -- | -11806 | -- |
| | VERTICAL | (V) | -- | -- | -- | 157 | -- |
| SHIELD EL. 151.00' | TRANSVERSE | (T) | -908 | -353 | -651 | -1077 | -625 |
| | LONGITUDINAL | (L) | 0 | 0 | 0 | 0 | 0 |
| | VERTICAL | (V) | 406 | 165 | 265 | 167 | 271 |
| SHIELD EL. 151.00' BROKEN | TRANSVERSE | (T) | -- | -- | -- | -530 | -- |
| | LONGITUDINAL | (L) | -- | -- | -- | -8897 | -- |
| | VERTICAL | (V) | -- | -- | -- | 91 | -- |
| MALLARD 230KV EL. 137.00', 123.00, 109.00' | TRANSVERSE | (T) | -1263 | -165 | -956 | -1381 | -899 |
| | LONGITUDINAL | (L) | 38 | -669 | 397 | 581 | 26 |
| | VERTICAL | (V) | 2351 | 1358 | 1569 | 1367 | 1568 |
| MALLARD 230KV BROKEN EL. 137.00' 123.00' | TRANSVERSE | (T) | -- | -- | -- | -640 | -- |
| | LONGITUDINAL | (L) | -- | -- | -- | -11775 | -- |
| | VERTICAL | (V) | -- | -- | -- | 747 | -- |
| RAIL 26KV EL. 93.00' | TRANSVERSE | (T) | -1092 | -55 | -837 | -1030 | -788 |
| | LONGITUDINAL | (L) | 0 | -889 | 398 | -66 | 0 |
| | VERTICAL | (V) | 1231 | 607 | 823 | 612 | 820 |
| NEUTRAL EL. 83.00' | TRANSVERSE | (T) | -410 | 48 | -357 | -445 | -339 |
| | LONGITUDINAL | (L) | 0 | -323 | 337 | 401 | 0 |
| | VERTICAL | (V) | 634 | 270 | 425 | 267 | 423 |
| WIND ON POLE | Wp | (PSF) | 10 | 18.5 | 2.3 | 4 | 4 |

ONE INCH AT FULL SIZE

REVISIONS

| REV | DATE | MF |
|---|---|---|
| DR | CK | APP |
| W.O. # | | |
| DESCRIPTION | | |
| 0 | 04/26/11 | |
| V.WC | W.O. # 1827201 | |

IRVING SEITOKU OGI — STATE OF WASHINGTON — 23207 — STRUCTURAL ENGINEER — PROFESSIONAL ENGINEER — 10-14-11

Seattle City Light

| SIGNATURE | DATE |
|---|---|
| DR : V. DONG | 04/26/2011 |
| CK : | |
| DSGN : | 10/14/11 |
| CK : | |
| APP : | 10/14/11 |

# OVERHEAD TRANSMISSION
## SOUTH TRANSMISSION
## DUWAMISH TO CRESTON
## 230KV-26 KV POLE # DU 1/36 N
## DESIGN LOADING

SHEET 5 OF 23

CLASS S-5

DRAWING NO. TB-4182

SCALE AS NOTED

REV. NO. 0

I:\DU_293\VANH\NORMAN\DUWM TO CRESTON\TB-4182.dwg
dongv Oct/14/2011 6:27am

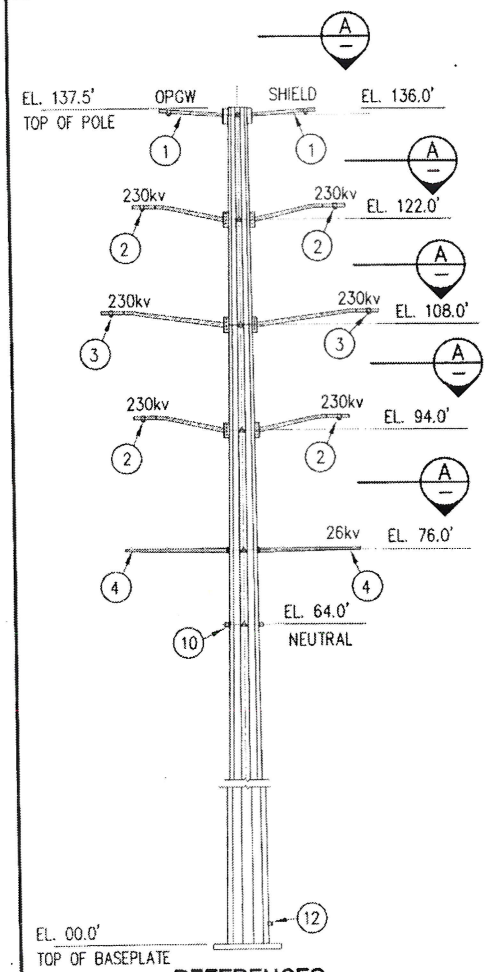


## REFERENCES:

N.T.S.

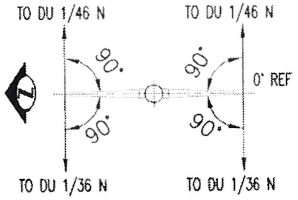


PLAN

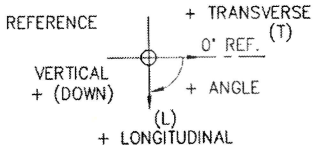


## LOADING REFERENCE

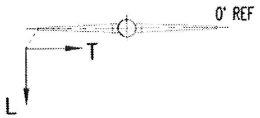


OPGW LOAD: @ ELV. 136.0'

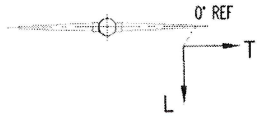


SHIELD LOAD: @ ELV. 136.0'

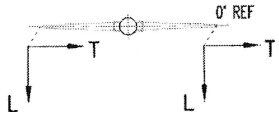


230kv LOAD: @ ELV. 122.0', 108.0' @ 94.0'

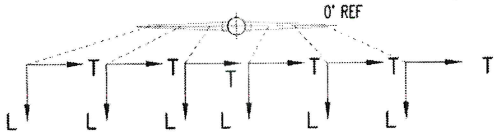


26kv LOAD: @ ELV. 76.0'

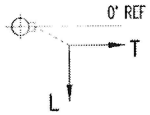


NEUTRAL LOAD: @ ELV. 64.0'

## LOADING PLANS

## NOTES

1. FOR GENERAL NOTES, SEE TB-4178.
2. ITEM DESIGNATED (X) ARE SHOWN ON TB-4188 TO TB-4200.
3. DEFLECTION CRITERIA: MAX. DEFLECTION AT TOP OF POLE <1% OF POLE LENGTH FOR NESC MEDIUM UNFACTORED LOAD CASE.
4. NO POLE CAMBER ALLOWED.
5. FOR JACKING NUTS, SEE TB-4200.
6. FOR LADDER BRACKET SEE TB-4196.
7. FOR SAFETY CABLE BRACKET SEE TB-4197.
8. FOR ATTACHMENTS NEAR POLE TOP SEE TB-4194
9. FOR BROKEN CONDUCTOR LOAD CASE SEE TB-4178, NOTE 8a.

| POLE DU 1/43 N TANGENT STRUCTURE (1 REQ'D) | | | LOAD CASE (LOADS INCLUDE LOAD FACTORS, LBS) | | | | |
|---|---|---|---|---|---|---|---|
| | | | 1 NESC MEDIUM | 2 NESC EX-WIND | 3 NESC EXT ICE & WIND | 4 BROKEN (SEE NOTE 9) | 5 NESC MEDIUM UNFAC |
| OPGW EL. 136.00' | TRANSVERSE | (T) | 622 | 726 | 151 | 176 | 253 |
| | LONGITUDINAL | (L) | 353 | 399 | 134 | 179 | 214 |
| | VERTICAL | (V) | -173 | -310 | -230 | -295 | -116 |
| OPGW EL. 136.00' BROKEN | TRANSVERSE | (T) | -- | -- | -- | 83 | -- |
| | LONGITUDINAL | (L) | -- | -- | -- | -11646 | -- |
| | VERTICAL | (V) | -- | -- | -- | -535 | -- |
| SHIELD EL. 136.00' | TRANSVERSE | (T) | 422 | 398 | 92 | 77 | 166 |
| | LONGITUDINAL | (L) | 76 | 66 | -52 | -179 | 46 |
| | VERTICAL | (V) | -144 | -273 | -220 | -246 | -96 |
| SHIELD EL. 136.00' BROKEN | TRANSVERSE | (T) | -- | -- | -- | 25 | -- |
| | LONGITUDINAL | (L) | -- | -- | -- | -9091 | -- |
| | VERTICAL | (V) | -- | -- | -- | -429 | -- |
| MALLARD 230KV EL. 122.00', 108.00, 94.00' | TRANSVERSE | (T) | 699 | 935 | 152 | 230 | 274 |
| | LONGITUDINAL | (L) | 123 | 476 | -147 | -176 | 74 |
| | VERTICAL | (V) | 1354 | 698 | 846 | 802 | 903 |
| MALLARD 230KV BROKEN EL. 122.00' 108.00' | TRANSVERSE | (T) | -- | -- | -- | 108 | -- |
| | LONGITUDINAL | (L) | -- | -- | -- | -11968 | -- |
| | VERTICAL | (V) | -- | -- | -- | -47 | -- |
| RAIL 26KV EL. 70.00' | TRANSVERSE | (T) | 675 | 896 | 152 | 191 | 267 |
| | LONGITUDINAL | (L) | 113 | 587 | -155 | 157 | 68 |
| | VERTICAL | (V) | 297 | 13 | 147 | 178 | 198 |
| NEUTRAL EL. 64.00' | TRANSVERSE | (T) | 507 | 566 | 120 | 131 | 205 |
| | LONGITUDINAL | (L) | 63 | 240 | -138 | -124 | 38 |
| | VERTICAL | (V) | 178 | -72 | 91 | 54 | 119 |
| WIND ON POLE | Wp (PSF) | | 10.00 | 18.50 | 2.30 | 4.00 | 4.00 |

ONE INCH AT FULL SIZE

REVISIONS

| REV | DATE | MF |
|---|---|---|
| DR | CK | APP |
| W.O. # | | |
| DESCRIPTION | | |
| 0 | 04/26/11 | |
| VWD | W.O. # 1827201 | |

IRVING SEITOKUNOGI STATE OF WASHINGTON 23207 STRUCTURAL ENGINEER PROFESSIONAL ENGINEER 10-14-11

Seattle City Light

| SIGNATURE | | DATE |
|---|---|---|
| DR | : V. DONG | 04/26/2011 |
| CK | : | |
| DSGN | : | 10/14/11 |
| CK | : | |
| APP | : | 10/14/11 |

# OVERHEAD TRANSMISSION
## SOUTH TRANSMISSION
## DUWAMISH TO CRESTON
## 230KV-26 KV POLE # DU 1/43 N
## DESIGN LOADING

SHEET 6 OF 23

CLASS S-6

DRAWING NO. TB-4183

SCALE AS NOTED

REV. NO. 0

E:\DU_293\VANH\NORMAN\DUWM TO CRESTON\TB-4183.dwg
dongv Oct/14/2011 6:26am

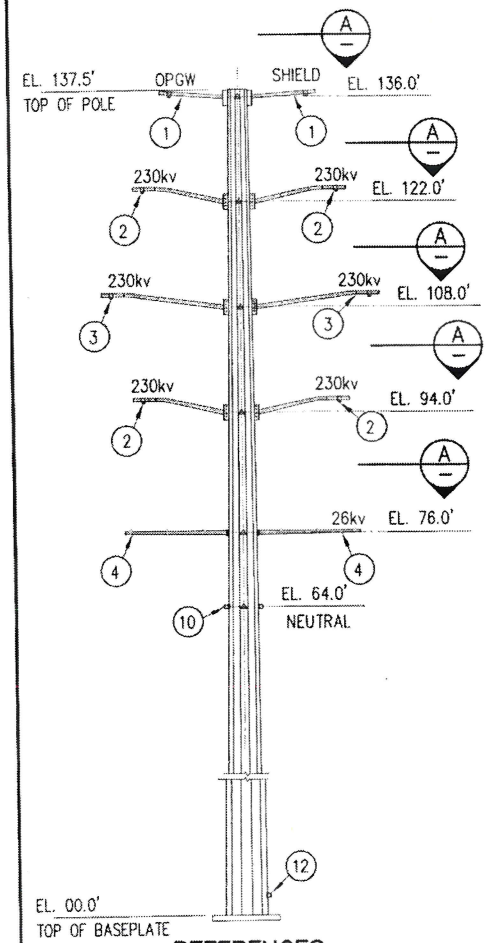


## REFERENCES:

N.T.S.

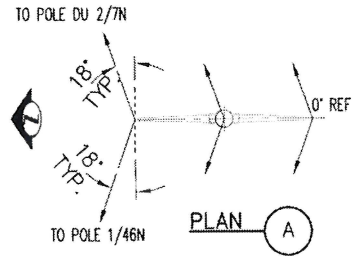


PLAN A

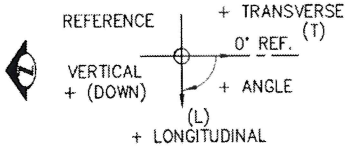


## LOADING REFERENCE

OPGW LOAD: @ ELV. 136.0'

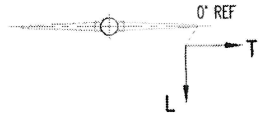


SHIELD LOAD: @ ELV. 136.0'

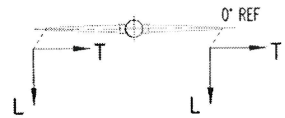


230kv LOAD: @ ELV. 122.0', 108.0' @ 94.0'

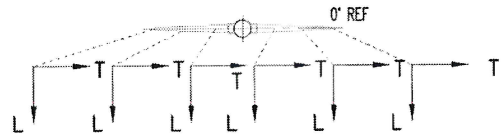


26kv LOAD: @ ELV. 76.0'

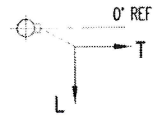


NEUTRAL LOAD: @ ELV. 64.0'

## LOADING PLANS

## NOTES

1. FOR GENERAL NOTES, SEE TB-4178.
2. ITEM DESIGNATED (X) ARE SHOWN ON TB-4188 TO TB-4200.
3. DEFLECTION CRITERIA: MAX. DEFLECTION AT TOP OF POLE <1% OF POLE LENGTH FOR NESC MEDIUM UNFACTORED LOAD CASE.
4. NO POLE CAMBER ALLOWED.
5. FOR JACKING NUTS, SEE TB-4200.
6. FOR LADDER BRACKET SEE TB-4196.
7. FOR SAFETY CABLE BRACKET SEE TB-4197.
8. FOR ATTACHMENTS NEAR POLE TOP SEE TB-4194
9. FOR BROKEN CONDUCTOR LOAD CASE SEE TB-4178, NOTE 8a.

| POLE DU 1/46 N ANGLE STRUCTURE (1 REQ'D) | | | LOAD CASE (LOADS INCLUDE LOAD FACTORS, LBS) | | | | |
|---|---|---|---|---|---|---|---|
| | | | 1 NESC MEDIUM | 2 NESC EX-WIND | 3 NESC EXT ICE & WIND | 4 BROKEN (SEE NOTE 9) | 5 NESC MEDIUM UNFAC |
| OPGW EL. 136.00' | TRANSVERSE | (T) | -9028 | -5298 | -5003 | -7361 | -5320 |
| | LONGITUDINAL | (L) | -1545 | -1237 | -581 | -522 | -946 |
| | VERTICAL | (V) | 569 | 56 | 373 | 229 | 379 |
| OPGW EL. 136.00' BROKEN | TRANSVERSE | (T) | -- | -- | -- | -3147 | -- |
| | LONGITUDINAL | (L) | -- | -- | -- | -11382 | -- |
| | VERTICAL | (V) | -- | -- | -- | -615 | -- |
| SHIELD EL. 136.00' | TRANSVERSE | (T) | -6470 | -3577 | -3478 | -5200 | -3812 |
| | LONGITUDINAL | (L) | -152 | 0 | 416 | 1405 | -98 |
| | VERTICAL | (V) | 428 | 115 | 315 | 245 | 286 |
| SHIELD EL. 136.00' BROKEN | TRANSVERSE | (T) | -- | -- | -- | -1948 | -- |
| | LONGITUDINAL | (L) | -- | -- | -- | -7086 | -- |
| | VERTICAL | (V) | -- | -- | -- | -386 | -- |
| MALLARD 230KV EL. 122.00', 108.00, 94.00' | TRANSVERSE | (T) | -9779 | -5970 | -5267 | -7361 | -5747 |
| | LONGITUDINAL | (L) | -143 | -657 | 342 | 456 | -97 |
| | VERTICAL | (V) | 2576 | 1321 | 1765 | 1512 | 1717 |
| MALLARD 230KV BROKEN EL. 122.00' 108.00' | TRANSVERSE | (T) | -- | -- | -- | -3009 | -- |
| | LONGITUDINAL | (L) | -- | -- | -- | -10695 | -- |
| | VERTICAL | (V) | -- | -- | -- | 134 | -- |
| RAIL 26KV EL. 76.00' | TRANSVERSE | (T) | -8746 | -5240 | -4644 | -5842 | -5131 |
| | LONGITUDINAL | (L) | -104 | -802 | 345 | -174 | -73 |
| | VERTICAL | (V) | 1389 | 507 | 973 | 682 | 927 |
| NEUTRAL EL. 64.00' | TRANSVERSE | (T) | -4535 | -2791 | -2189 | -2624 | -2626 |
| | LONGITUDINAL | (L) | -27 | -180 | 250 | 251 | -24 |
| | VERTICAL | (V) | 811 | 277 | 572 | 356 | 541 |
| WIND ON POLE | Wp | (PSF) | 10.00 | 18.50 | 2.30 | 4.00 | 4.00 |

ONE INCH AT FULL SIZE

REVISIONS

| REV | DATE | MF |
|---|---|---|
| DR | CK | APP |
| W.O. # | | |
| DESCRIPTION | | |
| 0 | 04/26/11 | |
| VWD | W.O. # 1827201 | |

IRVING SEITOKU OGI, STATE OF WASHINGTON, 23207, STRUCTURAL ENGINEER, PROFESSIONAL ENGINEER — 10-14-11

Seattle City Light

| SIGNATURE | | DATE |
|---|---|---|
| DR | : V. DONG | 04/26/2011 |
| CK | : | |
| DSGN | : | 10/14/11 |
| CK | : | |
| APP | : | 4/11/11 |

# OVERHEAD TRANSMISSION
## SOUTH TRANSMISSION
## DUWAMISH TO CRESTON
## 230KV-26 KV POLE # DU 1/46 N
## DESIGN LOADING

SHEET 7 OF 23

CLASS S-7

DRAWING NO. TB-4184

SCALE AS NOTED

REV. NO. 0

t:\DU_293\VAH\NORMAN\DUWM TO CRESTON\TB-4184.dwg
dongv Oct/14/2011 6:26am

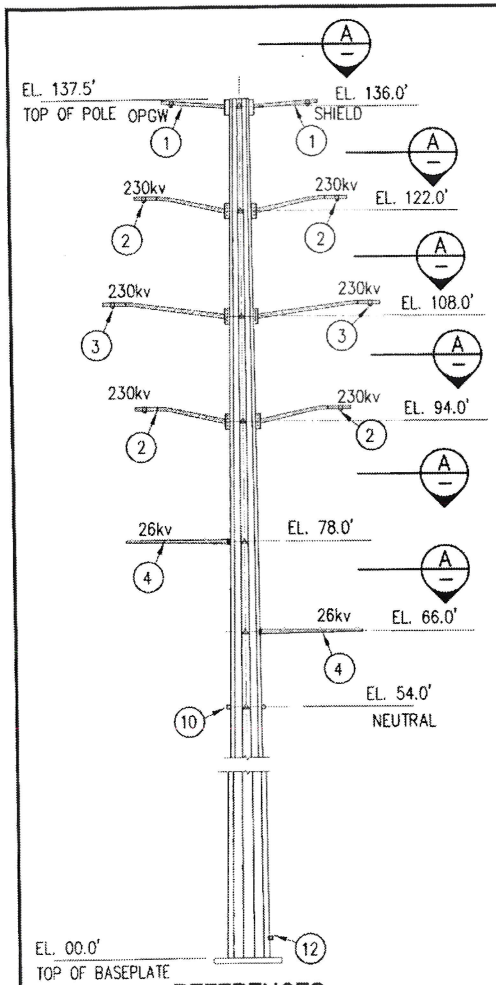


## REFERENCES:

N.T.S.

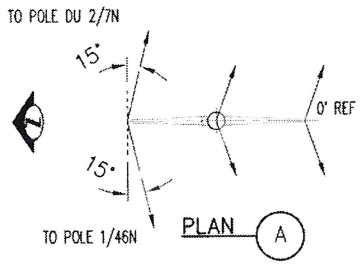


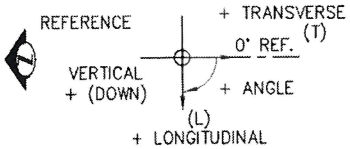


## LOADING REFERENCE

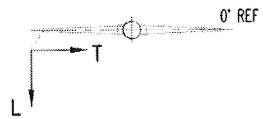


OPGW LOAD: @ ELV. 136.0'

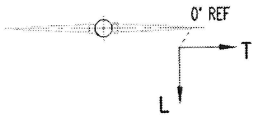


SHIELD LOAD: @ ELV. 136.0'

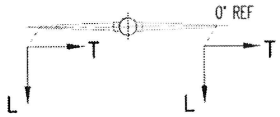


230kv LOAD: @ ELV. 122.0', 108.0' @ 94.0'

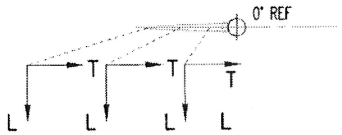


26kv LOAD: @ ELV. 78.0'

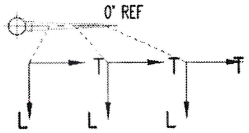


26kv LOAD: @ ELV. 78.0'

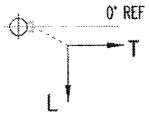


NEUTRAL LOAD: @ ELV. 54.0'

## LOADING PLANS

## NOTES

1. FOR GENERAL NOTES, SEE TB-4178.
2. ITEM DESIGNATED (X) ARE SHOWN ON TB-4188 TO TB-4200.
3. DEFLECTION CRITERIA: MAX. DEFLECTION AT TOP OF POLE <1% OF POLE LENGTH FOR NESC MEDIUM UNFACTORED LOAD CASE.
4. NO POLE CAMBER ALLOWED.
5. FOR JACKING NUTS, SEE TB-4200.
6. FOR LADDER BRACKET SEE TB-4196.
7. FOR SAFETY CABLE BRACKET SEE TB-4197.
8. FOR ATTACHMENTS NEAR POLE TOP SEE TB-4194
9. FOR BROKEN CONDUCTOR LOAD CASE SEE TB-4178, NOTE 8a.

| POLE DU 2/4 N TANGENT STRUCTURE (1 REQ'D) | | | LOAD CASE (LOADS INCLUDE LOAD FACTORS, LBS) | | | | |
|---|---|---|---|---|---|---|---|
| | | | 1 NESC MEDIUM | 2 NESC EX-WIND | 3 NESC EXT ICE & WIND | 4 BROKEN (SEE NOTE 9) | 5 NESC MEDIUM UNFAC |
| OPGW EL. 136.00' | TRANSVERSE | (T) | 7748 | 4605 | 4257 | 6246 | 4549 |
| | LONGITUDINAL | (L) | 1185 | 1093 | 347 | 153 | 734 |
| | VERTICAL | (V) | 1654 | 959 | 1116 | 769 | 1103 |
| OPGW EL. 136.00' BROKEN | TRANSVERSE | (T) | – | – | – | 3057 | – |
| | LONGITUDINAL | (L) | – | – | – | -11218 | – |
| | VERTICAL | (V) | – | – | – | -500 | – |
| SHIELD EL. 136.00' | TRANSVERSE | (T) | 5571 | 3101 | 2968 | 4416 | 3272 |
| | LONGITUDINAL | (L) | -186 | -189 | -655 | -1852 | -101 |
| | VERTICAL | (V) | 940 | 496 | 597 | 357 | 627 |
| SHIELD EL. 136.00' BROKEN | TRANSVERSE | (T) | – | – | – | 2440 | – |
| | LONGITUDINAL | (L) | – | – | – | -8930 | – |
| | VERTICAL | (V) | – | – | – | -429 | – |
| MALLARD 230KV EL. 122.00', 108.00, 94.00' | TRANSVERSE | (T) | 8400 | 5187 | 4493 | 6246 | 4916 |
| | LONGITUDINAL | (L) | -406 | 487 | -721 | -992 | -226 |
| | VERTICAL | (V) | 3407 | 2075 | 2218 | 1883 | 2272 |
| MALLARD 230KV BROKEN EL. 122.00' 108.00' | TRANSVERSE | (T) | – | – | – | 3196 | – |
| | LONGITUDINAL | (L) | – | – | – | -11676 | – |
| | VERTICAL | (V) | – | – | – | -29 | – |
| RAIL 26KV EL. 78.00' 66.00' | TRANSVERSE | (T) | 5534 | 3674 | 2746 | 3503 | 3190 |
| | LONGITUDINAL | (L) | 5963 | 3341 | 3296 | 4714 | 3634 |
| | VERTICAL | (V) | 2502 | 1396 | 1677 | 1240 | 1668 |
| NEUTRAL EL. 54.00' | TRANSVERSE | (T) | 3474 | 2225 | 1596 | 1871 | 1987 |
| | LONGITUDINAL | (L) | 1378 | 853 | 584 | 909 | 848 |
| | VERTICAL | (V) | 1084 | 532 | 706 | 461 | 722 |
| WIND ON POLE | Wp | (PSF) | 10.00 | 18.50 | 2.30 | 4.00 | 4.00 |

ONE INCH AT FULL SIZE

| REVISIONS | | | | | |
|---|---|---|---|---|---|
| REV | DR | W.O. # | DESCRIPTION | DATE | CK | MF | APP |
| 0 | VWD | 18.27201 | | 04/26/11 | | | |

IRVING SEITO MUNGI — STATE OF WASHINGTON — 23207 — STRUCTURAL ENGINEER — PROFESSIONAL ENGINEER — 10-14-11

**Seattle City Light**

| SIGNATURE | | DATE |
|---|---|---|
| DR | : V. DONG | 04/26/2011 |
| CK | : | |
| DSGN | : | 10/14/11 |
| CK | : | |
| APP | : | 10/14/11 |

# OVERHEAD TRANSMISSION
## SOUTH TRANSMISSION
## DUWAMISH TO CRESTON
## 230KV-26 KV POLE # DU 2/4 N
## DESIGN LOADING

SHEET 8 OF 23

CLASS **S-8**

DRAWING NO. **TB-4185**

SCALE: AS NOTED

REV. NO. 0

E:\DU_293\VINH\NORNAN\DUWA TO CRESTON\TB-4185.dwg
dongv Oct/14/2011 6:25am

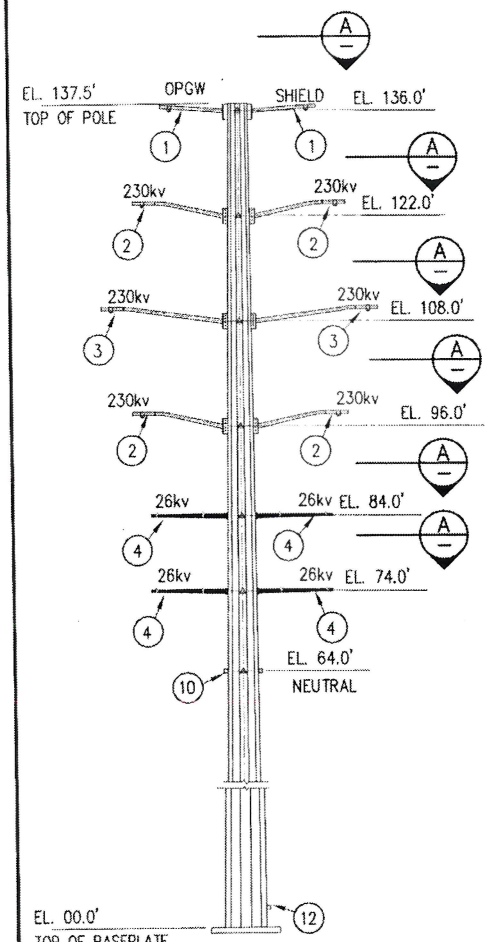


## REFERENCES:

N.T.S.

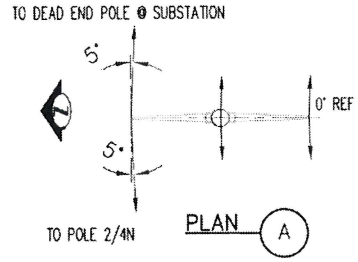


PLAN A

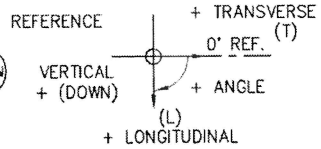


## LOADING REFERENCE

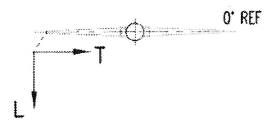


OPGW LOAD: @ ELV. 136.0'

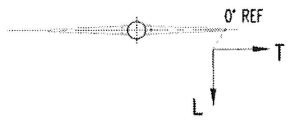


SHIELD LOAD: @ ELV. 136.0'

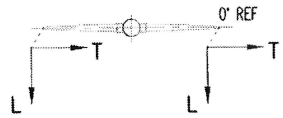


230kv LOAD: @ ELV. 122.0', 108.0' @ 96.0'

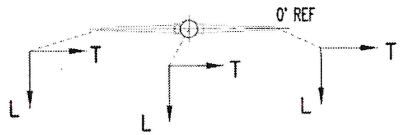


26kv LOAD: @ ELV. 84.0', 74.00'

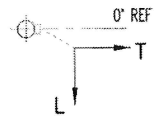


NEUTRAL LOAD: @ ELV. 64.0'

## LOADING PLANS

## NOTES

1. FOR GENERAL NOTES, SEE TB-4178.
2. ITEM DESIGNATED (X) ARE SHOWN ON TB-4188 TO TB-4200.
3. DEFLECTION CRITERIA: MAX. DEFLECTION AT TOP OF POLE <1% OF POLE LENGTH FOR NESC MEDIUM UNFACTORED LOAD CASE.
4. NO POLE CAMBER ALLOWED.
5. FOR JACKING NUTS, SEE TB-4200.
6. FOR LADDER BRACKET SEE TB-4196.
7. FOR SAFETY CABLE BRACKET SEE TB-4197.
8. FOR ATTACHMENTS NEAR POLE TOP SEE TB-4194
9. FOR BROKEN CONDUCTOR LOAD CASE SEE TB-4178, NOTE 8a.

| POLE DU 2/7 N TANGENT STRUCTURE (1 REQ'D) | | | LOAD CASE (LOADS INCLUDE LOAD FACTORS, LBS) | | | | |
|---|---|---|---|---|---|---|---|
| | | | 1 NESC MEDIUM | 2 NESC EX-WIND | 3 NESC EXT ICE & WIND | 4 BROKEN (SEE NOTE 9) | 5 NESC MEDIUM UNFAC |
| OPGW EL. 136.00' | TRANSVERSE | (T) | 2635 | 1784 | 1318 | 1875 | 1473 |
| | LONGITUDINAL | (L) | 5603 | 2499 | 3912 | 3683 | 3397 |
| | VERTICAL | (V) | 2547 | 1568 | 1825 | 1324 | 1898 |
| OPGW EL. 136.00' BROKEN | TRANSVERSE | (T) | -- | -- | -- | 369 | -- |
| | LONGITUDINAL | (L) | -- | -- | -- | -4622 | -- |
| | VERTICAL | (V) | -- | -- | -- | 551 | -- |
| SHIELD EL. 136.00' | TRANSVERSE | (T) | 1916 | 1170 | 949 | 1389 | 1072 |
| | LONGITUDINAL | (L) | 4091 | 2310 | 3058 | 3130 | 2480 |
| | VERTICAL | (V) | 1733 | 1120 | 1304 | 976 | 1156 |
| SHIELD EL. 136.00' BROKEN | TRANSVERSE | (T) | -- | -- | -- | 223 | -- |
| | LONGITUDINAL | (L) | -- | -- | -- | -3313 | -- |
| | VERTICAL | (V) | -- | -- | -- | 371 | -- |
| MALLARD 230KV EL. 122.00', 108.00, 96.00' | TRANSVERSE | (T) | 3320 | 2309 | 1675 | 2329 | 1865 |
| | LONGITUDINAL | (L) | -204 | -732 | 226 | 310 | -123 |
| | VERTICAL | (V) | 3915 | 2338 | 2677 | 2198 | 2610 |
| MALLARD 230KV BROKEN EL. 122.00' 108.00' | TRANSVERSE | (T) | -- | -- | -- | 744 | -- |
| | LONGITUDINAL | (L) | -- | -- | -- | -11691 | -- |
| | VERTICAL | (V) | -- | -- | -- | 909 | -- |
| RAIL N 26KV EL. 84.00' 74.00' | TRANSVERSE | (T) | 1353 | 987 | 633 | 765 | 757 |
| | LONGITUDINAL | (L) | -106 | 1520 | -411 | 914 | -56 |
| | VERTICAL | (V) | 2366 | 1173 | 1647 | 875 | 1578 |
| RAIL S 26KV EL. 84.00' 74.00' | TRANSVERSE | (T) | 1573 | 936 | 787 | 708 | 888 |
| | LONGITUDINAL | (L) | -29 | 1650 | -373 | 943 | 0 |
| | VERTICAL | (V) | 2138 | 1086 | 1479 | 816 | 1426 |
| NEUTRAL EL. 60.00' | TRANSVERSE | (T) | 921 | 599 | 424 | 470 | 514 |
| | LONGITUDINAL | (L) | 0 | 753 | -392 | 0 | 0 |
| | VERTICAL | (V) | 1542 | 836 | 1139 | 642 | 1028 |
| WIND ON POLE | Wp (PSF) | | 10.00 | 18.50 | 2.30 | 4.00 | 4.00 |

ONE INCH AT FULL SIZE

**REVISIONS**

| REV | DATE | MF |
|---|---|---|
| DR | CK | APP |
| W.O. # | | |

| DESCRIPTION | |
|---|---|
| 0 | 04/26/11 |
| VWD | W.O. # 1827201 |

IRVING SEITOKUNOGI — STATE OF WASHINGTON — 23207 — STRUCTURAL ENGINEER — PROFESSIONAL ENGINEER — 10-14-11

**Seattle City Light**

| SIGNATURE | | DATE |
|---|---|---|
| DR | : V. DONG | 04/26/2011 |
| CK | : | |
| DSGN | : | 10/14/11 |
| CK | : | |
| APP | : | 10/14/11 |

# OVERHEAD TRANSMISSION
## SOUTH TRANSMISSION
## DUWAMISH TO CRESTON
## 230KV-26 KV POLE # DU 2/7 N
## DESIGN LOADING

SHEET 9 OF 23

CLASS **S-9**

DRAWING NO. **TB-4186**

SCALE: AS NOTED

REV. NO. 0

I:\DU_293\WNN\WORMAN\DU#4 TO CRESTON\TB-4186.dwg
dorgv Oct/14/2011 6:25am

## NOTES:

1. SEE DRAWING TB-4178 FOR GENERAL NOTES.
2. SEE DRAWING TB-4179 TO TB-4186 FOR ARM LOCATION AND ORIENTATION.
3. ARM TO POLE CONNECTION SHOWN IS FOR ILLUSTRATION ONLY. TYPE OF CONNECTION SHALL BE DESIGNED BY THE POLE MANUFACTURER.
4. DESIGN ALL ARMS AND VANGS FOR THE FOLLOWING FACTORED LOADS (U.N.O).:
   LONGITUDINAL = ±12.5 KIPS
   TRANSVERSE = 10.0 KIPS (COMP. OR TENSION)
   VERTICAL = 3.0 KIPS DOWN
5. FOR ARM DESIGN APPLY LOADS AT OUTER CONDUCTOR VANG. LIMIT HORIZONTAL ARM DEFLECTION TO 1 1/2% OF ARM LENGTH AT END OF ARMS.
6. CHAMFER ALL HOLES.

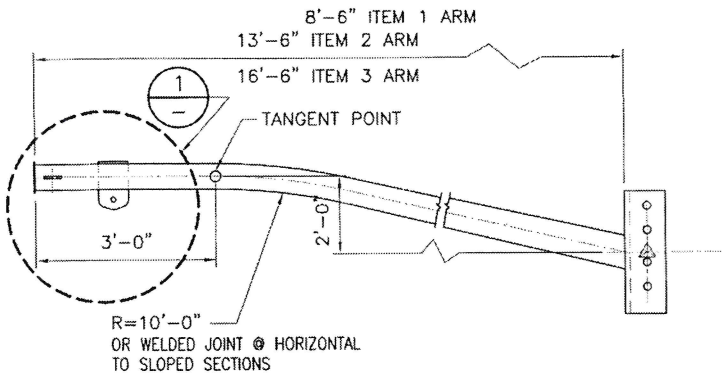


**ELEVATION – POLE ARMS**
N.T.S ITEMS 2 & 3

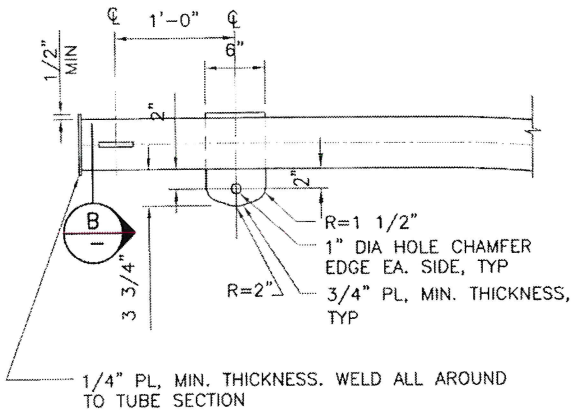


**DETAIL** 1
SCALE: 1"=1'-0"

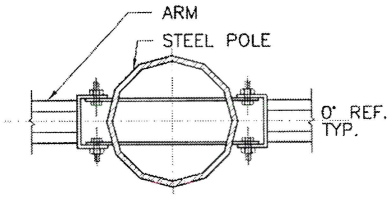


**SECTION** SEE NOTE 3 A
N.T.S.

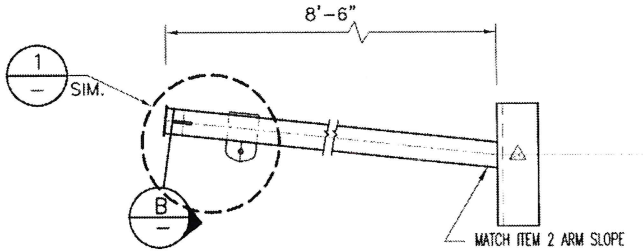


**ELEVATION – 8'-6" ARM-ITEM 1**
N.T.S.

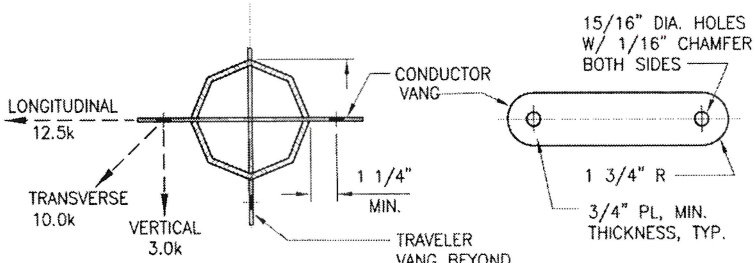


**SECTION** B
N.T.S.

| REV | DATE | DR | CK | APP | W.O. # | DESCRIPTION |
|---|---|---|---|---|---|---|
| 0 | 04/26/11 | VWD | | | W.O # 1827201 | |

REVISIONS — ONE INCH AT FULL SIZE

IRVING SEITOKU LEE — STATE OF WASHINGTON — 23207 — STRUCTURAL ENGINEER — PROFESSIONAL ENGINEER — 10/14/11

**Seattle City Light**

| SIGNATURE | DATE |
|---|---|
| DR : V. DONG | 04/26/2011 |
| CK : | |
| DSGN : | 10/14/11 |
| CK : | |
| APP : | 10/14/11 |

# OVERHEAD TRANSMISSION
## SOUTH TRANSMISSION
## DUWAMISH TO CRESTON
## 230KV-ARMS/SHIELD ARMS
## DIMENSIONS & DESIGN LOADING

SHEET 11 OF 23
CLASS **S-11**
DRAWING NO. **TB-4188**
SCALE **AS NOTED**
REV. NO. **0**

I:\DU_293\VINH\NORMAN\DUWM TO CRESTON\TB-4188.dwg
dongv Oct/14/2011 6:22am

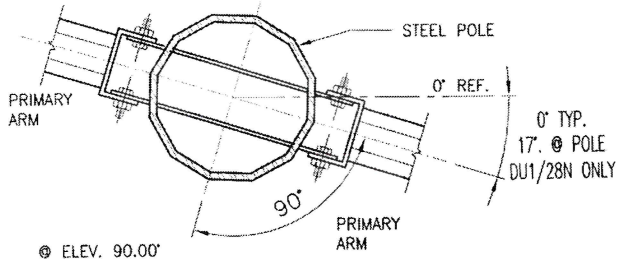


## PLAN ARM
N.T.S.

## NOTES

1. SEE DRAWING TB-4178 FOR GENERAL NOTES.
2. SEE DRAWING TB-4179 THRU TB-4186 FOR ARM LOCATION AND ORIENTATION.
3. ARM TO POLE CONNECTION SHOWN IS FOR ILLUSTRATION ONLY, TYPE OF CONNECTION SHALL BE DESIGNED BY THE POLE MANUFACTURER.
4. DESIGN ALL PRIMARY AND SECONDARY ARMS, VANGS AND VANGS AND ATTACHMENTS FOR THE FOLLOWING FACTORED LOADS (U.N.O).:
   - LONGITUDINAL = 9.0 KIPS
   - TRANSVERSE = 6.0 KIPS
   - VERTICAL = 3.0 KIPS DOWN

   FOR ARM DESIGN APPLY LOADS ON ONE SIDE OF ARM AT END OF ARM. LIMIT HORIZONTAL ARM DEFECTION TO 1 1/2% OF ARM LENGTH AT END OF ARM.

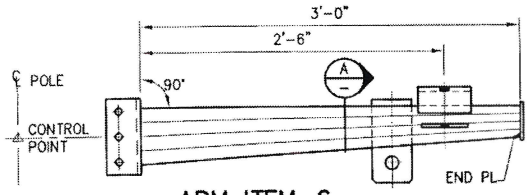


## ARM ITEM-6
N.T.S.

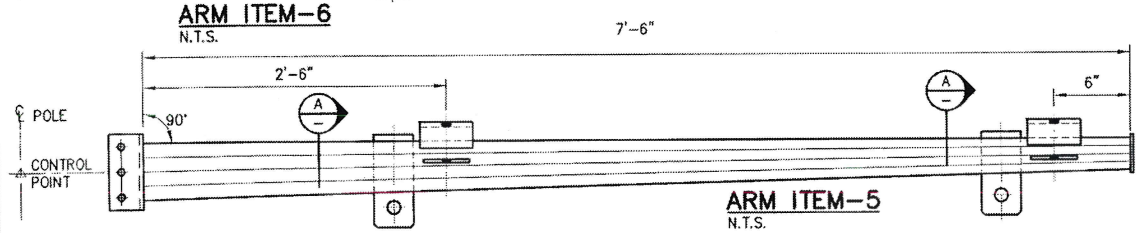


## ARM ITEM-5
N.T.S.

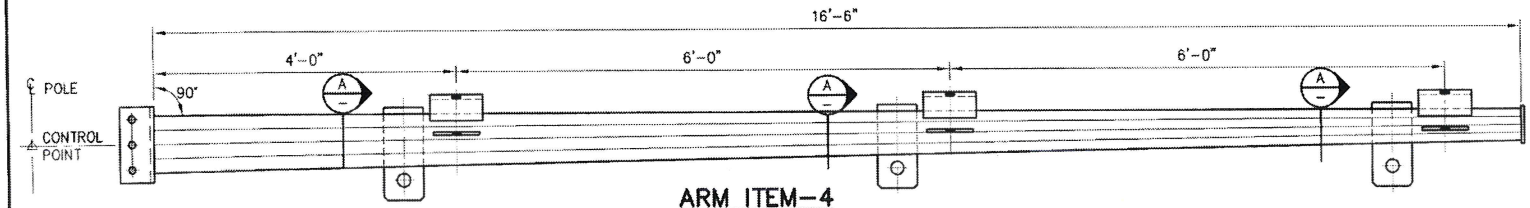


## ARM ITEM-4
N.T.S.

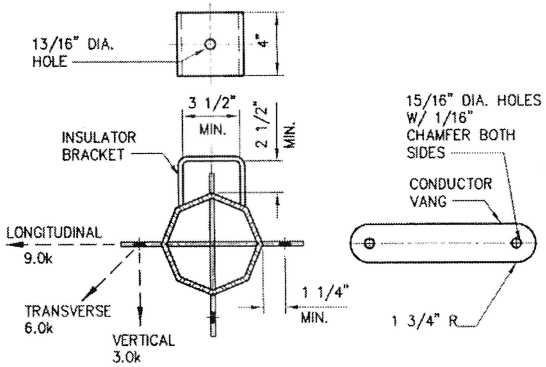


## SECTION
N.T.S.

| REV | DATE | DESCRIPTION |
|---|---|---|
| 0 | 04/26/11 | |

REVISIONS — ONE INCH AT FULL SIZE

IRVING SEITO KUNOGI — STATE OF WASHINGTON — 23207 — STRUCTURAL ENGINEER — PROFESSIONAL ENGINEER — 10-14-11

**Seattle City Light**

| SIGNATURE | | DATE |
|---|---|---|
| DR | V. DONG | 04/26/2011 |
| CK | | |
| DSGN | | 10/14/11 |
| CK | | |
| APP | | 10/14/11 |

# OVERHEAD TRANSMISSION
## SOUTH TRANSMISSION
## DUWAMISH TO CRESTON
## 26KV-ARMS
## DIMENSIONS & DESIGN LOADING

SHEET 12 OF 23

CLASS **S-12**

DRAWING NO. **TB-4189**

SCALE: AS NOTED

REV. NO. 0

I:\DU_293\VNH\NORMAN\DUWM TO CRESTON\TB-4189.dwg
dongv Oct/14/2011 6:23am

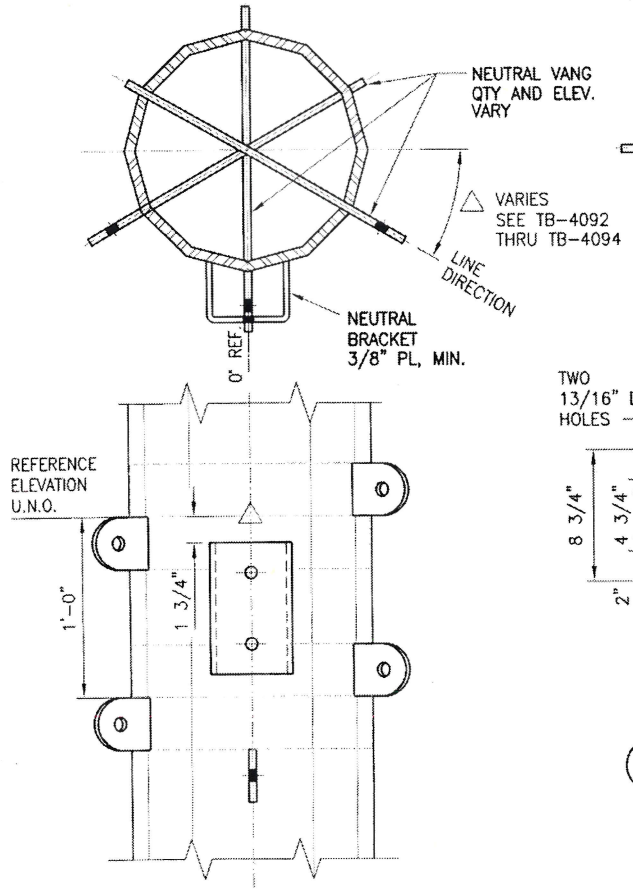


## NEUTRAL CONNECTION–SCHEMATIC

N.T.S.

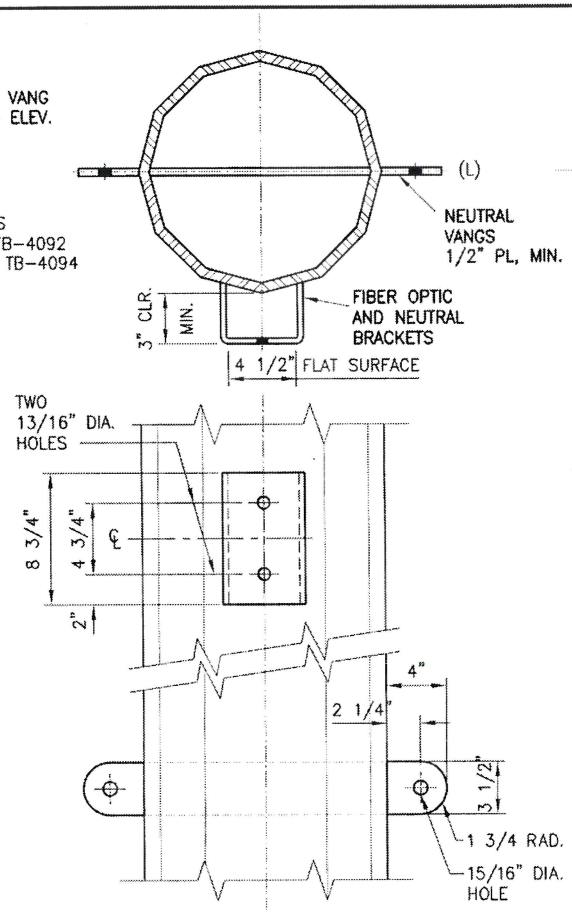


## NEUTRAL BRACKET & VANG DIMENSIONS

N.T.S.

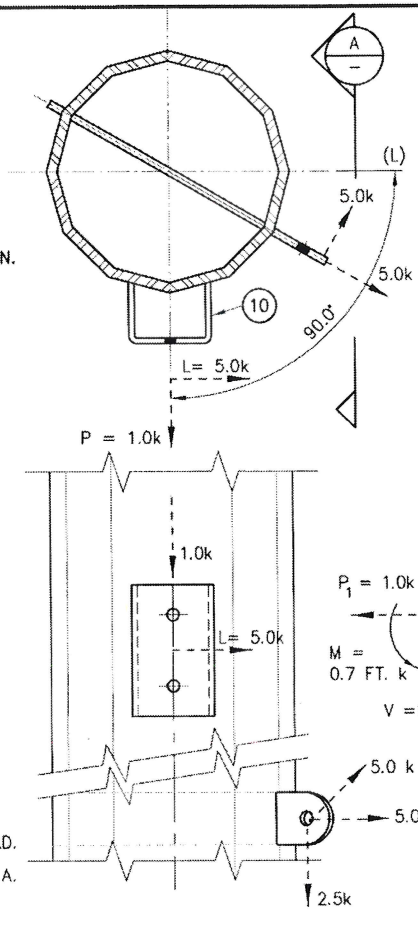


## DESIGN LOADING

N.T.S.

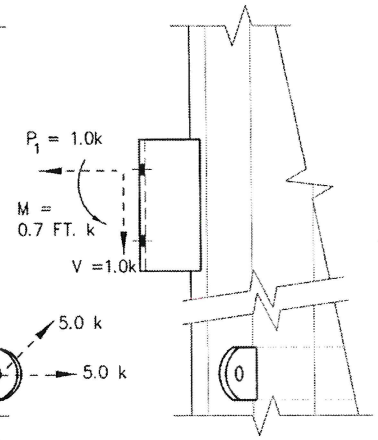


## ELEVATION

N.T.S.

A

## NOTES

1. VANG DESIGN LOADS SHOWN ARE FACTORED LOADS.
2. VANG PL 3/4" MIN. THICKNESS. POLE MANUFACTURER. TO PROVIDE CALCULATIONS W/ SUBMITTALS TO VERIFY ADEQUACY OF MIN. THICKNESS, PROVIDE GREATER THICKNESS AS NECESSARY.

| REVISIONS | | | | |
|---|---|---|---|---|
| REV | DATE | MF | | |
| DR | CK | APP | | |
| W.O. # | | | | |
| DESCRIPTION | | | | |
| 0 | 04/26/11 | | | |
| VWD | | | | |
| W.O. # 1827201 | | | | |

ONE INCH AT FULL SIZE

IRVING SEITOKUDOGI — STATE OF WASHINGTON — 23207 — STRUCTURAL ENGINEER — PROFESSIONAL ENGINEER — 10/14/11

| Seattle City Light | | |
|---|---|---|
| SIGNATURE | | DATE |
| DR | : V. DONG | 04/26/2011 |
| CK | : | |
| DSGN | : | 10/14/11 |
| CK | : | |
| APP | : | 10/14/11 |

OVERHEAD TRANSMISSION
SOUTH TRANSMISSION
DUWAMISH TO CRESTON
26KV-NEUTRAL ATTACHMENT
DIMENSIONS & DESIGN LOADING

SHEET 14 OF 23
CLASS S-14
DRAWING NO. TB-4191
SCALE AS NOTED
REV. NO. 0

I:\DU_293\VINH\NORMAN\DUWM TO CRESTON\TB-4191.dwg
dongv Oct/14/2011 6:23am

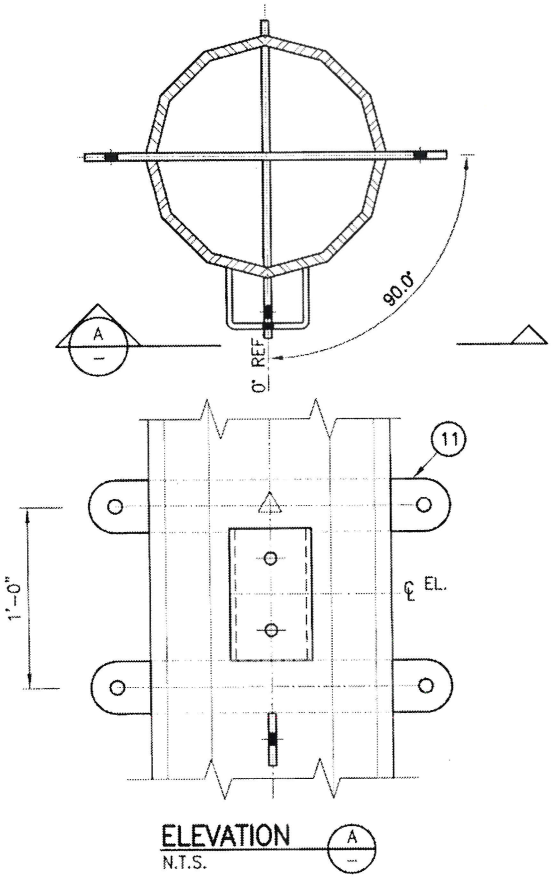


ELEVATION A
N.T.S.

NEUTRAL BRACKET AND VANG
POLES– DU 1/24 N, DU 1/33 N, DU 1/36 N, DU 1/43 N, DU 1/46 N, DU 2/4 N, & DU 2/7 N

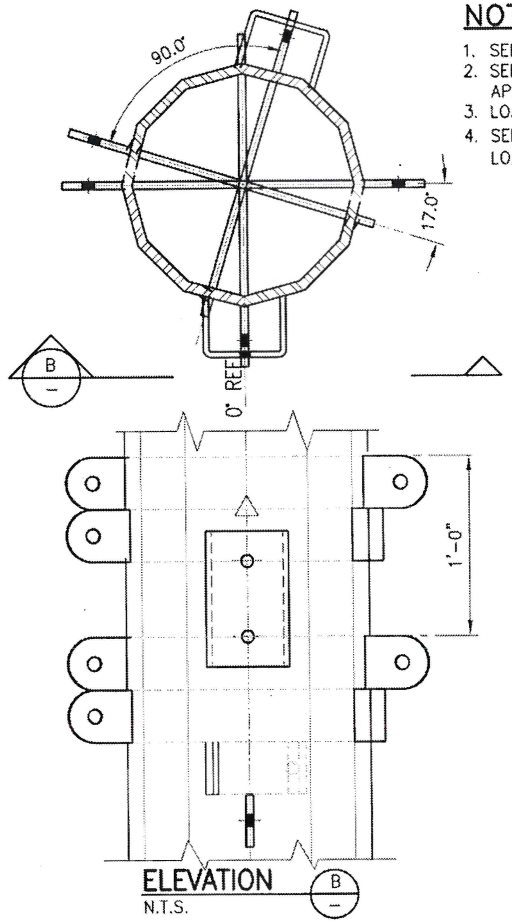


ELEVATION B
N.T.S.

NEUTRAL BRACKET AND VANG
– POLE DU 1/28 N

## NOTES

1. SEE DRAWING TB-4178 FOR GENERAL NOTES.
2. SEE DRAWING TB-4179 THRU TB-4187 FOR APPLIED POLE LOADS.
3. LOADS SHOWN ARE NESC FACTORED LOADS.
4. SEE TB-4191 FOR BRACKET AND VANG DETAILS LOADING.

ONE INCH
AT FULL SIZE

REVISIONS

| REV | DATE | MF |
|---|---|---|
| DR | CK | APP |
| W.O. # | | |
| DESCRIPTION | | |
| 0 | 04/26/11 | |
| VWD | | |
| W.O. # 1827201 | | |

IRVING SEITOKU LOGI
STATE OF WASHINGTON
23207
STRUCTURAL ENGINEER
PROFESSIONAL ENGINEER
10-14-11

Seattle City Light

| SIGNATURE | DATE |
|---|---|
| DR : V. DONG | 04/26/2011 |
| CK : | |
| DSGN : | 10/14/11 |
| CK : | |
| APP : | 10/14/11 |

OVERHEAD TRANSMISSION
SOUTH TRANSMISSION

DUWAMISH TO CRESTON
26KV-NEUTRAL ATTACHMENT
CONFIGURATIONS

SHEET 15 OF 23
CLASS S-15
DRAWING NO. TB-4192
SCALE AS NOTED
REV. NO. 0

I:\OL_293\VNH\NORMAN\DUWM TO CRESTON\TB-4192.dwg
dongv Oct/14/2011 6:23am

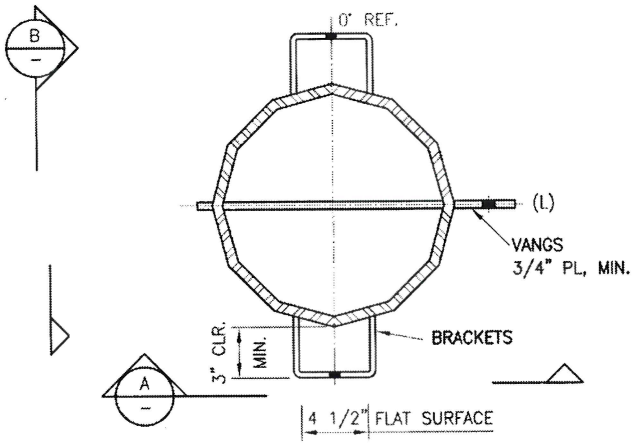


PLAN
N.T.S.

## NOTES

1. STREET LIGHT BRACKET DESIGN LOADS SHOWN ARE FACTORED LOADS.

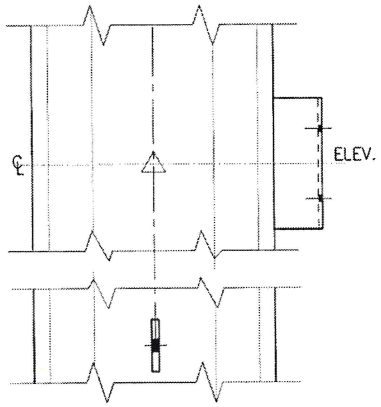


ELEVATION (B)
N.T.S.

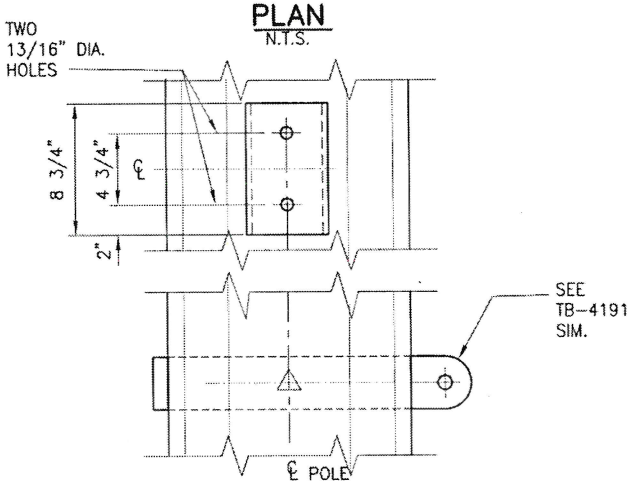


ELEVATION (A)
N.T.S.

SERVICE WIRE BRACKET ITEM 11
POLE DU 1/28 N ONLY

ONE INCH
AT FULL SIZE

**REVISIONS**

| REV | DATE | MF |
|---|---|---|
| DR | CK | APP |
| W.O. # | | |
| DESCRIPTION | | |
| 0 | 04/26/11 | |
| VWD | | |
| W.O. # 1827201 | | |

IRVING SEITOKU OGI
STATE OF WASHINGTON
23207
STRUCTURAL ENGINEER
PROFESSIONAL ENGINEER
10-14-11

**Seattle City Light**

| SIGNATURE | | DATE |
|---|---|---|
| DR | : V. DONG | 04/26/2011 |
| CK | : | |
| DSGN | : I. Ogi | 10/14/11 |
| CK | : | |
| APP | : Irving S. Ogi | 10/14/11 |

# OVERHEAD TRANSMISSION
## SOUTH TRANSMISSION
## DUWAMISH TO CRESTON
## SERVICE WIRE ATTACHMENT DIMENSIONS

SHEET 16 OF 23
CLASS **S-16**
DRAWING NO. **TB-4193**
SCALE **AS NOTED**
REV. NO. **0**

E:\OU_293\VANA\MORGAN\DUWA TO CRESTON\TB-4193.dwg
dongv Oct/14/2011 6:23am

## NOTES:

1. SEE DRAWING TB-4178 FOR GENERAL NOTES.
2. FOR POLE DESIGN FORCES SEE TB-4179 THRU. TB-4187

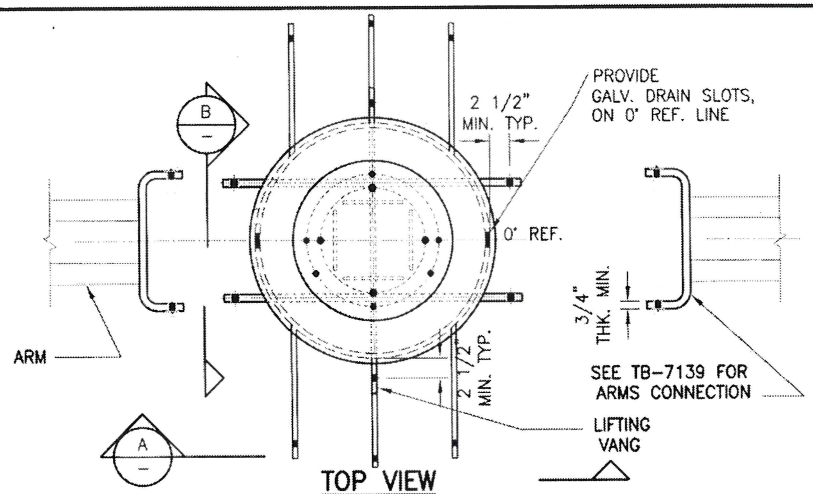


TOP VIEW

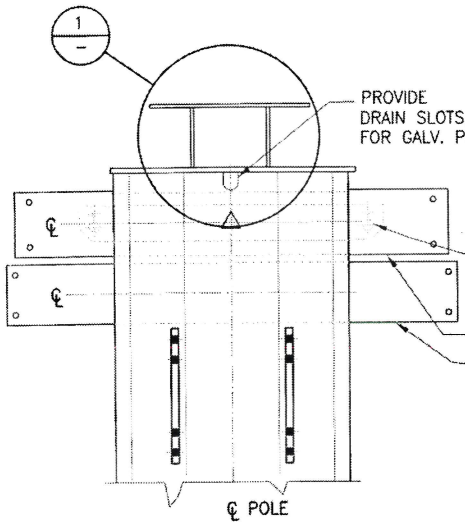


ELEVATION (B) POLE TOP
N.T.S.

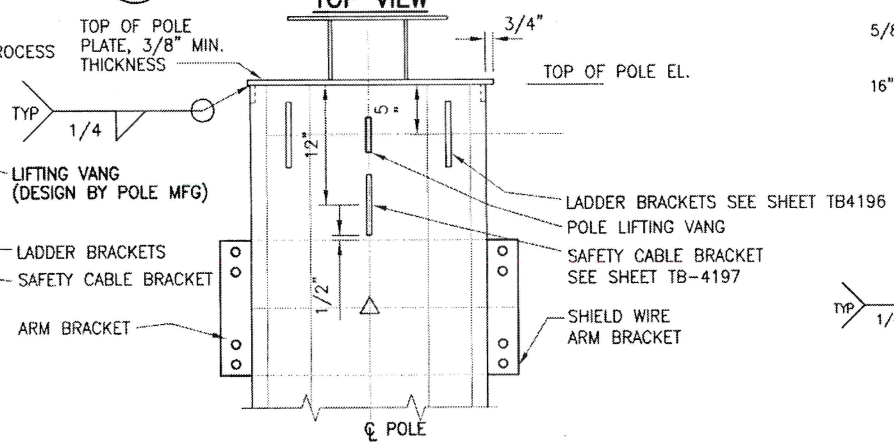


ELEVATION (A) POLE TOP
N.T.S.

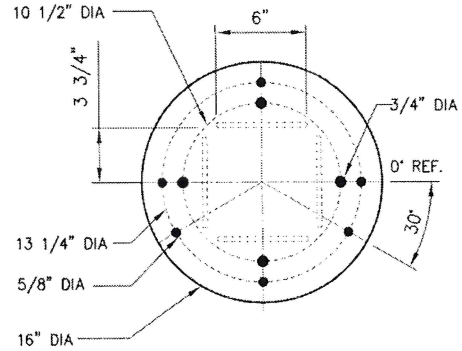


PLAN

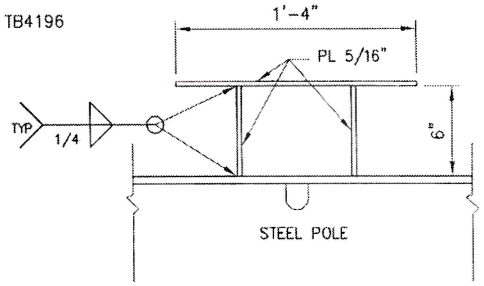


DETAIL (1) FAA BEACON MOUNT
N.T.S.

ONE INCH AT FULL SIZE

**REVISIONS**

| REV | DATE | MF |
|---|---|---|
| DR | CK | APP |
| W.O. # | | |

| | DESCRIPTION | | |
|---|---|---|---|
| 0 | | 04/26/11 | |
| VWD | W.O. # 1827201 | | |

IRVING SEITOKU OGI — STATE OF WASHINGTON — 23207 — STRUCTURAL ENGINEER — PROFESSIONAL ENGINEER — 10/14/11

**Seattle City Light**

| SIGNATURE | | DATE |
|---|---|---|
| DR | : V. DONG | 04/26/2011 |
| CK | : | |
| DSGN | : I. Ogi | 10/14/11 |
| CK | : | |
| APP | : Irving S. Ogi | 10/14/11 |

# OVERHEAD TRANSMISSION
## SOUTH TRANSMISSION
## DUWAMISH TO CRESTON
## 230KV STEEL POLE
## POLE TOP DETAILS/FAA BEACON BRACKET

SHEET 17 OF 23

CLASS **S-17**

DRAWING NO. **TB-4194**

SCALE **AS NOTED** REV. NO. **0**

S:\OU_293\VWH\NORMAN\DUWM TO CRESTON\TB-4194.dwg
dongv Oct/14/2011 6:23am

## NOTES:

1. LOCATE STUDS ON POLES DU 1/24N. @10'-0" O.C. MAXIMUM VERTICAL SPACING.
2. LOCATE BOTTOM STUDS 2'-0" BELOW SPLICE BOX BOTTOM BRACKETS. THEN 10'-0" O.C. MAX. SPACING.
3. LOCATE TOP STUDS AT 2'-0" BELOW TOP OF POLE.
4. SEE TB-4178 FOR GENERAL NOTES.

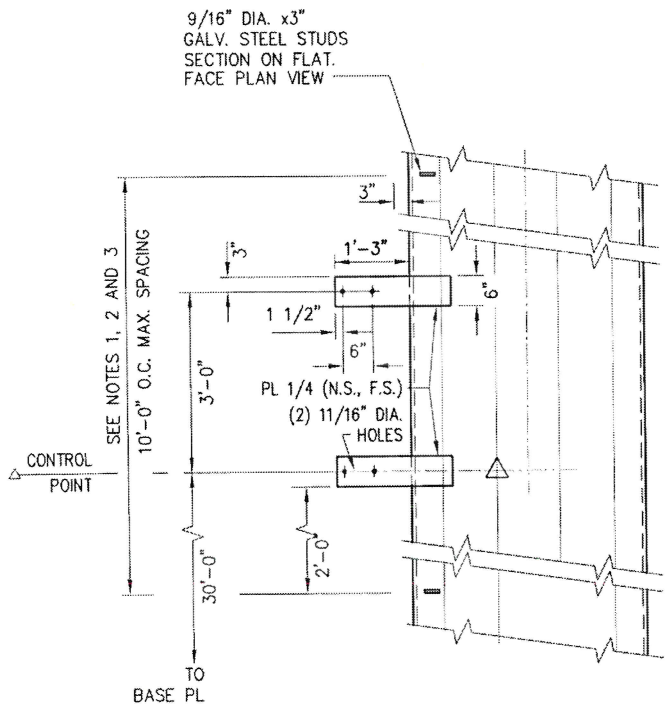


ELEVATION (A) OPGW SPICE BOX MOUNTING BRACKET - ITEM 13

N.T.S.

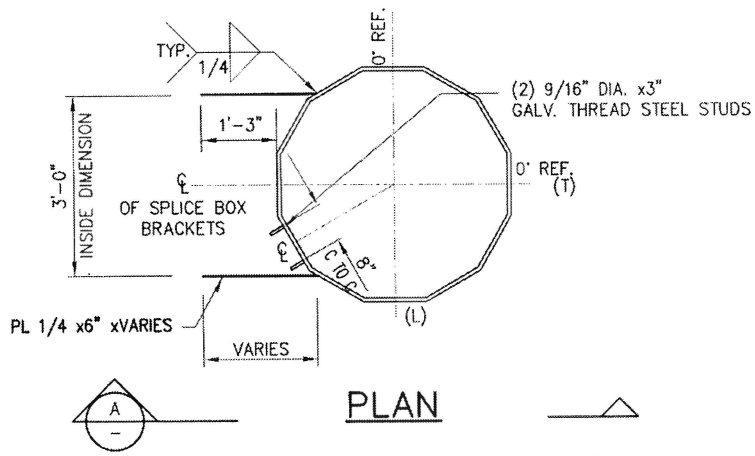


PLAN

MOUNTING @ POLES DU 1/24N

| REVISIONS | | | | |
|---|---|---|---|---|
| REV | DR | CK | DATE | APP |
| W.O. # | DESCRIPTION | | | MF |
| 0 | VWD | | 04/26/11 | |
| W.O. # 1827201 | | | | |

ONE INCH — AT FULL SIZE

IRVING SEITO KUOGI — STATE OF WASHINGTON — 23207 — STRUCTURAL ENGINEER — PROFESSIONAL ENGINEER — 10/14/11

Seattle City Light

| SIGNATURE | | DATE |
|---|---|---|
| DR | : V. DONG | 04/26/2011 |
| CK | : | |
| DSGN | : | 10/14/11 |
| CK | : | |
| APP | : | 10/14/11 |

# OVERHEAD TRANSMISSION
## SOUTH TRANSMISSION
## DUWAMISH TO CRESTON
## 230KV POLE
## OPGW SPLICE BOX MOUNTING

SHEET 18 OF 23

CLASS **S-18**

DRAWING NO. TB-4195

SCALE: AS NOTED

REV. NO. 0

I:\QU_293\VANH\NORMAN\DUWM TO CRESTON\TB-4195.dwg
dongv Oct/14/2011 8:23am

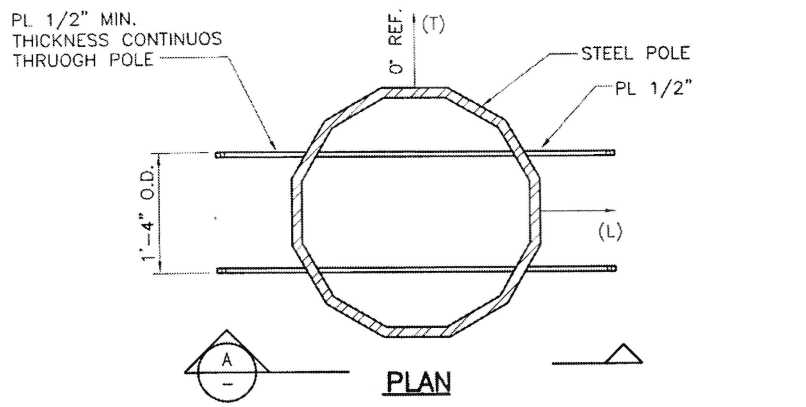


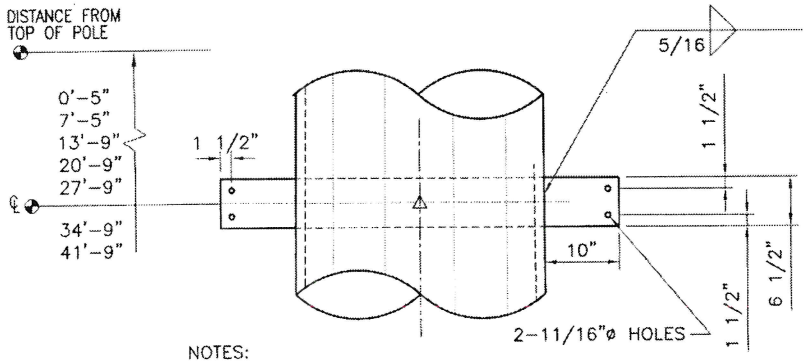


NOTES:

1. WHERE POLE SECTION OVER LAPS LOWER SECTION BRACKET IS NOT CONTINUOUS THROUGH POLE.
2. LADDER BRACKET ATTACHMENT HEIGHTS MAY REQUIRE ADJUSTMENT PENDING POLE SECTION LENGTH AND ATTACHMENT DETAILS

## SCL LADDER BRACKETS

SCALE: 3/4"=1'-0"

A (TOP POLE SECTION ONLY)

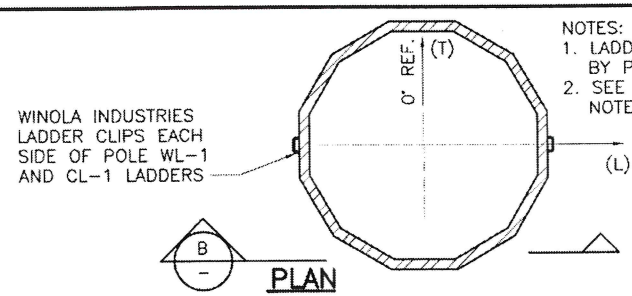


NOTES:

1. LADDERS BY SCL, ATTACHMENTS BY POLE MANUFACTURER.
2. SEE TB-4178 FOR GENERAL NOTES.

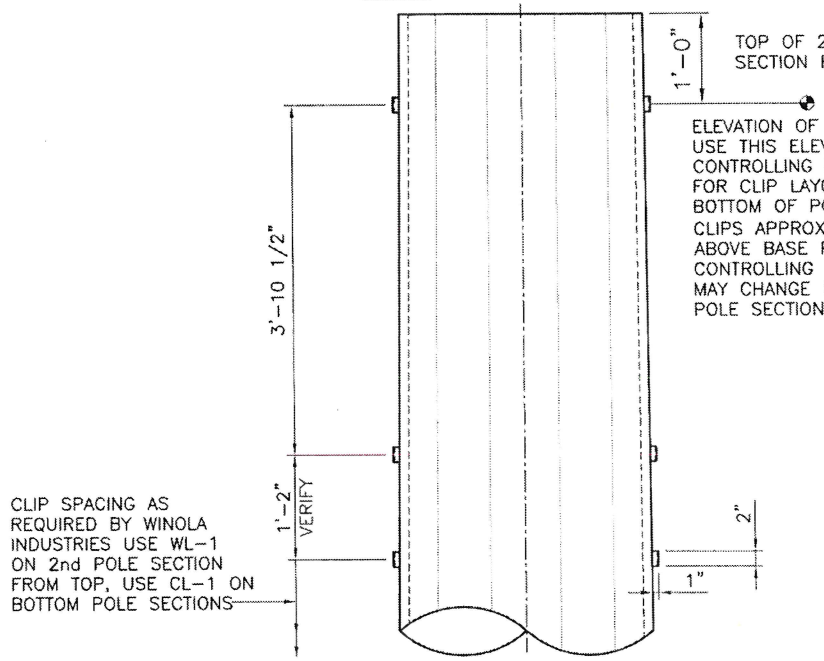


## WINOLA IND. LADDER CLIP ATTACHMENT

SCALE: 3/4"=1'-0"

B

| REV | DATE | CK | APP | MF |
|---|---|---|---|---|
| DR | | | | |
| W.O. # | | | | |
| DESCRIPTION | | | | |
| C | 04/26/11 | | | |
| VWO | W.O. # 1827201 | | | |

ONE INCH AT FULL SIZE

REVISIONS

IRVING SEITO KLOGI — STATE OF WASHINGTON — 23207 — STRUCTURAL ENGINEER — PROFESSIONAL ENGINEER

Seattle City Light

| SIGNATURE | DATE |
|---|---|
| DR : V. DONG | 04/26/2011 |
| CK : | |
| DSGN : | 10/14/11 |
| CK : | |
| APP : | 10/14/11 |

# OVERHEAD TRANSMISSION
## SOUTH TRANSMISSION
## DUWAMISH TO CRESTON
## LADDER DETAILS

SHEET 19 OF 23

CLASS S-19

DRAWING NO. TB-4196

SCALE AS NOTED

REV. NO. 0

I:\OU_293\VINH\NORMAN\DUWM TO CRESTON\TB-4196.dwg
dongy Oct/14/2011 6:22am

## NOTES:

1. FOR GENERAL NOTES, SEE TB-4178.
2. △ INDICATES CONTROL POINT.
3. SEE TB-4194 FOR OTHER ATTACHMENTS NEAR POLE TOP.

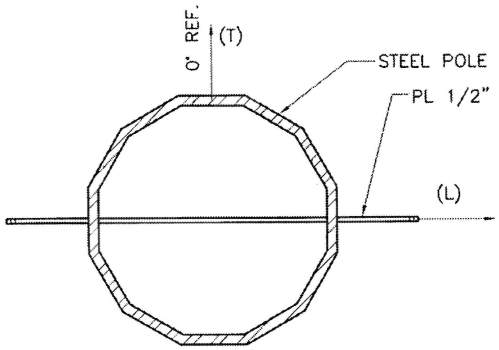


PLAN

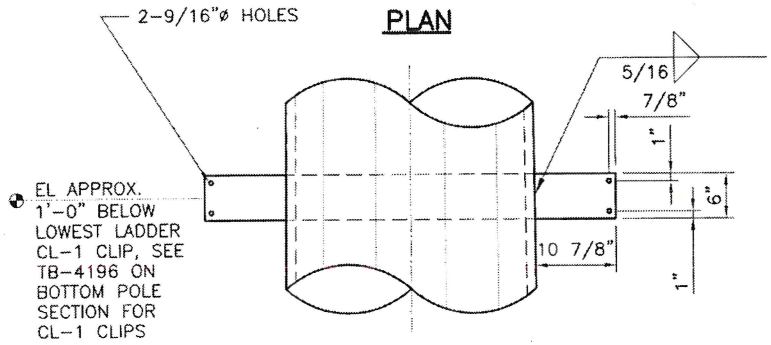


BOTTOM STAND OFF FOR SAFETY CABLE
N.T.S.

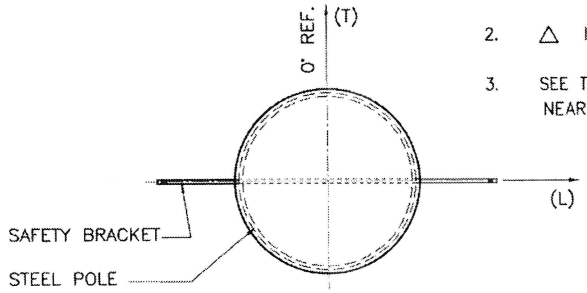


SECTIONAL PLAN A

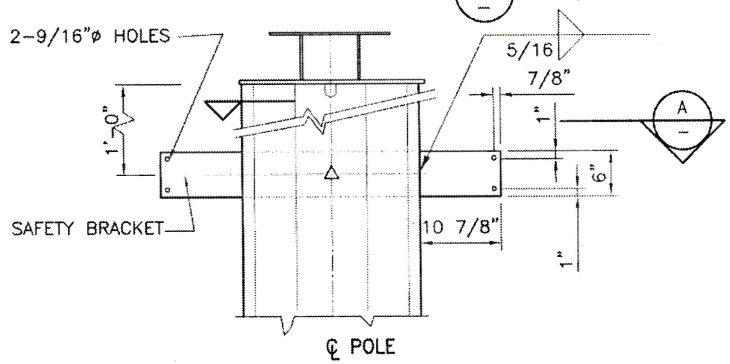


TOP STAND OFF FOR SAFETY CABLE
N.T.S.

| REV | DATE | DR | W.O. # | DESCRIPTION |
|---|---|---|---|---|
| 0 | 04/26/11 | VWD | W.O. # 1827201 | |

ONE INCH AT FULL SIZE

IRVING SEITOKU DGI — STATE OF WASHINGTON — 23207 — STRUCTURAL ENGINEER — PROFESSIONAL ENGINEER — 10/14/11

Seattle City Light

| SIGNATURE | | DATE |
|---|---|---|
| DR | : V. DONG | 04/26/2011 |
| CK | : | |
| DSGN | : | 10/14/11 |
| CK | : | |
| APP | : | 10/14/11 |

OVERHEAD TRANSMISSION
SOUTH TRANSMISSION
DUWAMISH TO CRESTON
230KV STEEL POLE
SAFETY CABLE ATTACHMENTS

SHEET 20 OF 23
CLASS S-20
DRAWING NO. TB-4197
SCALE AS NOTED
REV. NO. 0

I:\OU_293\VINH\NORMAN\DUWM TO CRESTON\TB-4197.dwg
dongv Oct/14/2011 6:22am

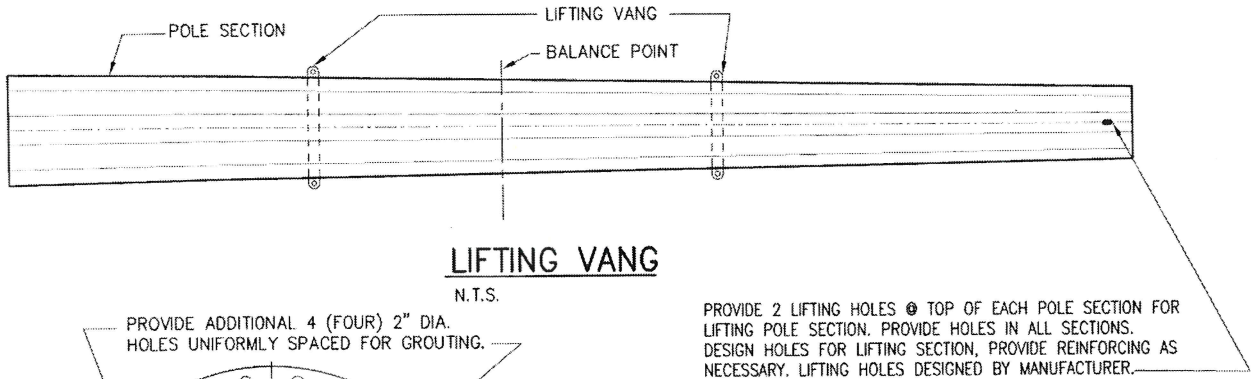


## LIFTING VANG

N.T.S.

## NOTE:

SEE DRAWING TB-4178 FOR GENERAL NOTES.

NOTE FOR LIFTING VANG:
PROVIDE 2 LIFTING VANGS FOR EACH POLE SECTION CENTERED ABOUT THE SECTION BALANCE POINT FOR LIFTING THE POLE SECTION FROM A HORIZONTAL POSITION. DESIGN BY POLE MANUFACTURE.

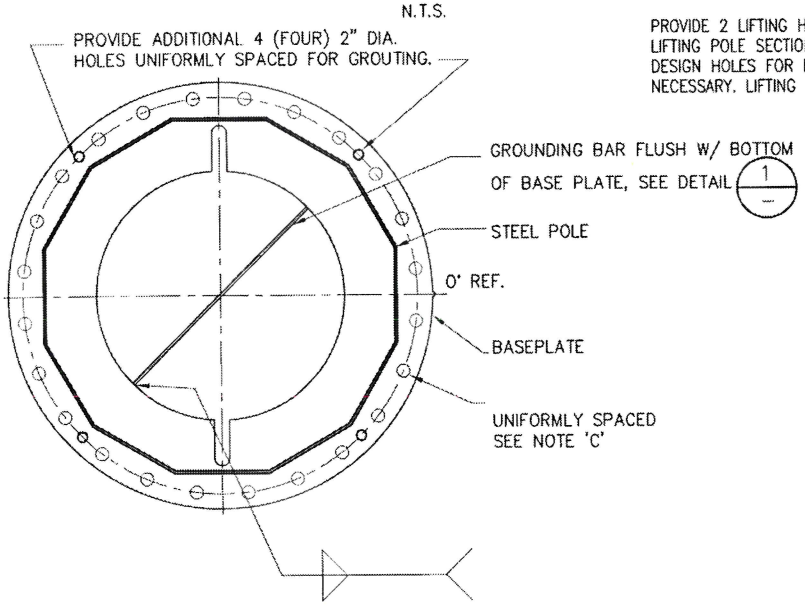


## GROUT HOLES IN BASEPLATE

N.T.S.

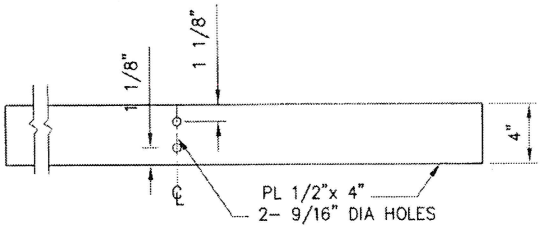


## DETAIL 1 GROUNDING BAR

N.T.S.

| REV | DATE | DESCRIPTION |
|---|---|---|
| 0 | 04/26/11 | |

REVISIONS

DR | CK | APP | MF

W.O. #

VWD | W.O. # 1827201

ONE INCH AT FULL SIZE

IRVING SEITOKU LOO — STATE OF WASHINGTON — 23207 — STRUCTURAL ENGINEER — PROFESSIONAL ENGINEER — 10/14/11

| Seattle City Light | |
|---|---|
| SIGNATURE | DATE |
| DR : V. DONG | 04/26/2011 |
| CK : | |
| DSGN : | 10/14/11 |
| CK : | |
| APP : | 10/14/11 |

OVERHEAD TRANSMISSION
SOUTH TRANSMISSION
DUWAMISH TO CRESTON
230KV STEEL POLES
POLE SECTION LIFTING VANGS

SHEET 21 OF 23
CLASS S-21
DRAWING NO. TB-4198
SCALE AS NOTED
REV. NO. 0

E:\OL_293\VINH\NORMAN\DUWM TO CRESTON\TB-4198.dwg
dengr Oct/14/2011 6:32am

## NOTE:

SEE DRAWING TB-4178 FOR GENERAL NOTES.

NOTES FOR TOP RING:

A. PROVIDE TWO 'V' NOTCHS ON THE 0° & 180° REFERENCE LINE.

B. TOP SPACER RING SHALL BE 3/4" MIN. THICKNESS.

C. ANCHOR BOLTS SHALL NOT BE LOCATED ON THE '0°' REFERENCE LINE.

D. SET TOP SPACER RING 7 1/4" BELOW TOP OF ALL ANCHOR BOLTS .

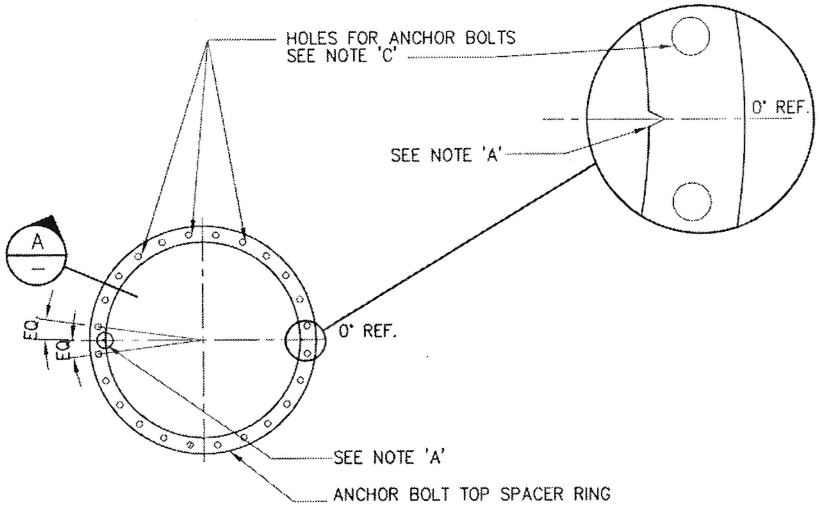


TOP RING OF ANCHOR BOLTS
N.T.S. CAGE 'V' NOTCHES

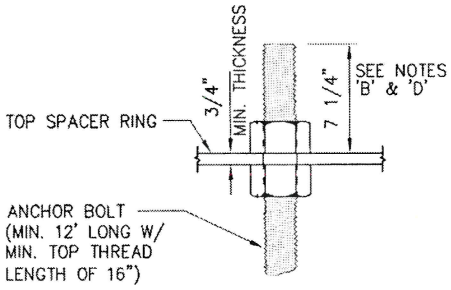


SECTION A
N.T.S.

| REV | DATE | CK | APP | MF |
|---|---|---|---|---|
| DR | | | | |
| W.O. # | | | | |

REVISIONS

| | DESCRIPTION | |
|---|---|---|
| 0 | 04/26/11 | |
| VWD | | Dong |
| W.O. # 1827201 | | |

ONE INCH AT FULL SIZE

IRVING SEITO KOGI — STATE OF WASHINGTON — 23207 — STRUCTURAL ENGINEER — PROFESSIONAL ENGINEER — 10/14/11

Seattle City Light

| SIGNATURE | | DATE |
|---|---|---|
| DR | : V. DONG | 04/26/2011 |
| CK | : | |
| DSGN | : | 10/14/11 |
| CK | : | |
| APP | : | 10/14/11 |

OVERHEAD TRANSMISSION
SOUTH TRANSMISSION
DUWAMISH TO CRESTON
230KV STEEL POLES
TOP SPACER RING FOR ANCHOR BOLT CAGE

SHEET 22 OF 23
CLASS S-22
DRAWING NO. TB-4199
SCALE AS NOTED
REV. NO. 0

I:\OU_293\VINH\NORMAN\DUWA TO CRESTON\TB-4199.dwg
dongv Oct/14/2011 6:32am

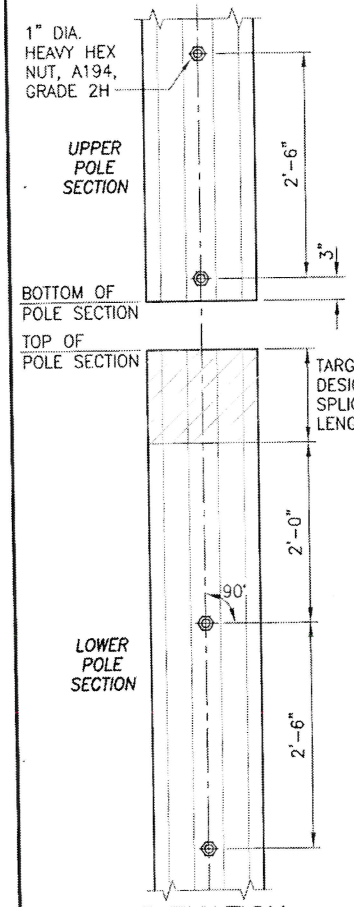


ELEVATION

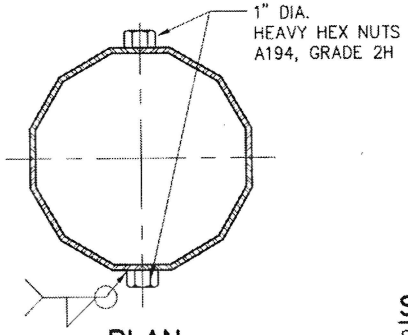


PLAN

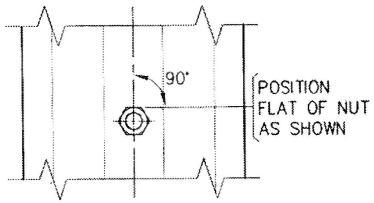


ELEVATION

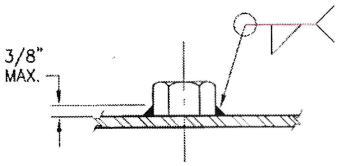


DETAIL– JACK NUT

STEEL POLE JACKING NUTS
N.T.S.

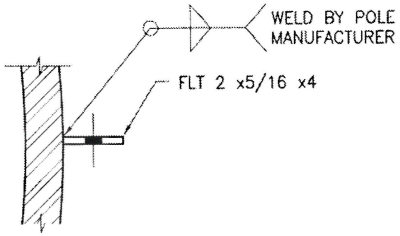


SECTION A – GROUNDING PLATE
SCALE: N.T.S.

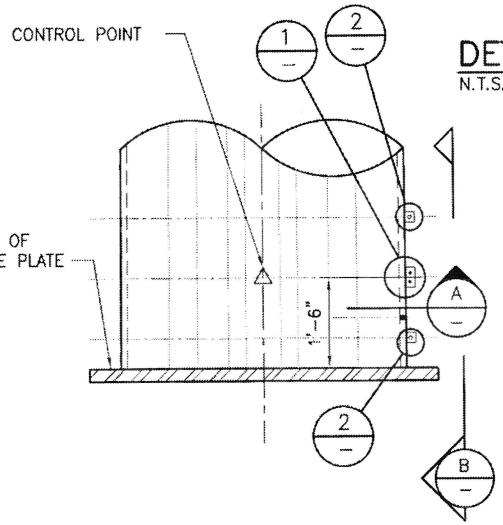


TYPICAL GROUNDING PAD– ITEM #12
N.T.S.

## NOTES

1. SEE DRAWING TB-4178 FOR GENERAL NOTES.
2. PROVIDE JACKING NUTS AS DETAILED FOR EACH POLE SLIP JOINT TO FACILITATE THE USE OF SCL JACKING DEVICE.
3. PLACE GROUNDING PLATE ON 0' REF. LINE.

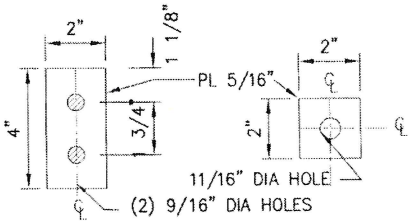


DETAIL 1 – GROUNDING PLATE
N.T.S.

DETAIL 2 – GROUNDING WIRE COVER BRACKET
N.T.S.

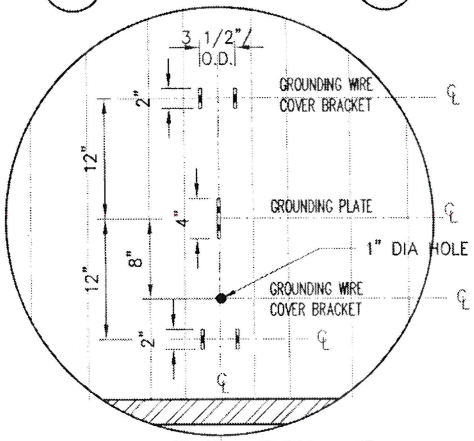


ELEVATION B
N.T.S.

| REVISIONS | | | | |
|---|---|---|---|---|
| REV | DATE | CK | APP | MF |
| DR | | | | |
| W.O. # | | | | |
| DESCRIPTION | | | | |
| 0 | 04/26/11 | | | |
| VWD | | | | |
| W.O. # 1827201 | | | | |

ONE INCH
AT FULL SIZE

IRVING SEITOKU DONG
STATE OF WASHINGTON
23207
STRUCTURAL ENGINEER
PROFESSIONAL ENGINEER
10/14/11

Seattle City Light

| SIGNATURE | DATE |
|---|---|
| DR : V. DONG | 04/26/2011 |
| CK : | |
| DSGN : | 10/14/11 |
| CK : | |
| APP : | 10/14/11 |

OVERHEAD TRANSMISSION
SOUTH TRANSMISSION
DUWAMISH TO CRESTON
230KV STEEL POLES JACKING NUTS &
GROUNDING PAD

SHEET 23 OF 23
CLASS S-23
DRAWING NO. TB-4200
SCALE AS NOTED
REV. NO. 0

E:\OU_293\VINH\NORMAN\DUWA TO CRESTON\TB-4200.dwg
dongv Oct/14/2011 6:32am