Central Waterfront Project – Transmission Line Relocation

Ampacity Calculations

Prepared for

City of Seattle, Washington

POWER ENGINEERS

CALCULATION COVER SHEET

Project Name:	MA-US-1-2	**Calculation No.:**	N/A
Client Name:	CH2M Hill	**Number of Sheets:**	1
Project Number:	122724	**Task Number:**	01.02

Title: Ampacity Calculations

	Name	Initials
Designed/Calculated By:	Nathan Scott	NDS
Checked By:	Joseph Hunter	JH
Approved and Released By:		
Code Related:		
Reviewed By:	PW Spencer	PWS
P. E.'s Seal No. (If Required):		**State of:**

Calculation		Responsible Design Engineer (RDE)		Checker		Lead Design Engineer (LDE)		PM/PE
Rev.	**Description**	**By**	**Date**	**Checker**	**Date**	**Approve**	**Date**	**QA/QC**
1	100%	NDS	06/23	JH	06/24			

☐ Preliminary Calculation
☒ Final Calculation
☐ Superseded by Calculation Number _____

122724 MA-US-1 & 2 Yesler to Union, AMPACITY SUMMARY

Prepared By: N. Scott Date: 6/10/2011

Reviewed By: J. Hunter Date:

Execution Name	Approx. STATIONING (in Progrees Submittal)	Ambient Soil Temp (°c)	STEAM High/Low Pressure	Size (in)	Depth to Center (ft)	Insulation?	SHORING Shoring Present? Douglas Fir	115kV Horiz. to Ductbank 2 (ft)	BR-CN & BR-UN Ductbank 2 ORIENTATION	DOC-2 (ft)	Conductor Size (kcmil)	Cable Type (XLPE or SCFF)	Circuit Ampacities Circ. 1 (A)	TEMP (°C)	Circ. 2 (A)	TEMP (°C)	2nd Ductbank Horiz. to Ductbank 3	Ductbank 2 ORIENTATION	DOC-3 (ft)	Circuit Ampacities Circ. 1 (A)	TEMP (°C)	3rd Ductbank Horiz. to Ductbank 3	Ductbank 3 ORIENTATION	DOC-1 (ft)	Circuit Ampacities Circ. 1 (A)	TEMP (°C)	Circ. 2 (A)	TEMP (°C)	Circ. 3 (A)	TEMP (°C)	Circ. 4 (A)	TEMP (°C)	Circ. 5 (A)	TEMP (°C)
W&U-1A	3+56	36.4	HIGH PRES	12	8	YES - 6"		0	4 x 2	21	2500	XLPE	603	64.9	603	65																		
W&U-1B	3+56	36.4	HIGH PRES	12	8	NONE		5	4 x 2	21	2500	XLPE	603	89.8	603	88.5																		
W&U-1C	3+56	36.4	HIGH PRES	12	8	YES - 6"	YES - 4"	0	4 x 2	21	2500	XLPE	603	68.1	603	68																		
W&U-1D	3+56	36.4	HIGH PRES	12	8	NONE	YES - 4"	7	4 x 2	21	2500	XLPE	603	89.6	603	88.3																		
W&U-2A	3+17	36.4	HIGH PRES	12	7	YES - 6"		0	4 x 2	18	2500	XLPE	603	64.2	603	64.3																		
W&U-2B	3+17	36.4	HIGH PRES	12	7	NONE		5	4 x 2	18	2500	XLPE	603	89.7	603	88.1																		
W&U-2C	3+17	36.4	HIGH PRES	12	7	YES - 6"	YES - 4"	0	4 x 2	18	2500	XLPE	603	67.4	603	67.2																		
W&U-2D	3+17	36.4	HIGH PRES	12	7	NONE	YES - 4"	7	4 x 2	18	2500	XLPE	603	89	603	87.5																		
W&U-3A	2+10	36.4	HIGH PRES	14	6	YES - 6"		0	4 x 2	18	2500	XLPE	603	63.2	603	63.1																		
W&U-3B	2+10	36.4	HIGH PRES	14	6	NONE		5	4 x 2	18	2500	XLPE	603	87.5	603	86.9																		
W&U-3C	2+10	36.4	HIGH PRES	14	6	YES - 6"	YES - 4"	0	4 x 2	18	2500	XLPE	603	66.1	603	66.2																		
W&U-3D	2+10	36.4	HIGH PRES	14	6	NONE	YES - 4"	6.92	4 x 2	18	2500	XLPE	603	88.5	603	88.1																		
W&U-4A	2+10	36.4	HIGH PRES	14	4.33	YES - 6"		0	4 x 2	18	2500	XLPE	603	70.5	603	70.8	3.5 C/L	6 X 2 - 13.8kV	4	200	86.5	13 C/L	3 X 4 - 13.8kV	3.5	423	89.6	423	91.5	423	89.9	423	86.3	423	88.1
W&U-4C	2+10	36.4	HIGH PRES	14	4.33	YES - 6"	YES - 4"	0	4 x 2	18	2500	XLPE	603	75.1	603	74.9	3.5 C/L	6 X 2 - 13.8kV	4	200	86.7	13 C/L	3 X 4 - 13.8kV	3.5	423	89.7	423	91.6	423	90	423	86.3	423	88.3
W&U-5A	2+00	36.4	HIGH PRES	14	4.33	YES - 6"		13 C/L	4 x 2	18	2500	XLPE	603	71.3	603	71.2	3.5 C/L	6 X 2 - 13.8kV	4	200	86.5	13 C/L	3 X 4 - 13.8kV	3.5	423	89.7	423	91.5	423	89.9	423	86.4	423	87.9
W&U-58	2+00	36.4	HIGH PRES	14	4.33	NONE		13 C/L	4 x 2	18	2500	XLPE	603	89.6	603	88.6	3.5 C/L	6 X 2 - 13.8kV	4	200	135.1	13 C/L	3 X 4 - 13.8kV	3.5	423	100.6	423	101.9	423	99.6	423	96.3	423	101
W&U-5C	2+00	36.4	HIGH PRES	14	4.33	YES - 6"	YES - 4"	13 C/L	4 x 2	18	2500	XLPE	603	76.7	603	76.1	3.5 C/L	6 X 2 - 13.8kV	4	200	87.8	13 C/L	3 X 4 - 13.8kV	3.5	423	90.3	423	92.3	423	90.7	423	87.2	423	89.2
Mar1A	17+74	18	HIGH PRES	4	6.5	YES - 6"		0	2 x 4	8.5	2500	XLPE	603	42	603	41.9																		
Mar1B	17+74	18	HIGH PRES	4	6.5	NONE		5	2 x 4	8.5	2500	XLPE	603	76	603	70																		
B85-A	16+30	18	-	-	-	-		0	2 x 4	12	2500	XLPE	603	48.7	603	48.5	-1.5 C/L	8" HPFF-115kV	5.5	941	72.6	1.5 C/L	5" HPFF-115kV	5.5	226	49.1	-	-	-	-	-	-	-	-
B85-C	16+30	18	-	-	-	-	YES - 4"	0	2 x 4	12	2500	XLPE	603	52.6	603	51.9	-1.5 C/L	8" HPFF-115kV	5.5	941	73	1.5 C/L	5" HPFF-115kV	5.5	226	49.5	-	-	-	-	-	-	-	-

*Conditions that apply to all calculations

DOC = Depth of Cover
Ambient Soil Temperature = 36.4°C
Ambient Native Soil Rho = 1.0°C-m/W
HS Concrete Rho Value = 0.60°C-m/W

LS FTB Rho Value = 0.75°C-m/W
115kV Ampacity Target = 603A
Steam Insulation Rho Value = 23.8°c-m/w
Douglas Fir Shoring Rho Value = 8.33°C-m/W

Southwire
HV Solutions

115 kV XLPE Cable

Cable Construction
Reverse Concentric Stranded Copper, Compressed Conductor
Super Smooth Conductor Shield
Super Clean XLPE Insulation
Full Wall - 800 mil XLPE
True Triple Extrusion, Dry Cured and Dry Cooled
Firmly Bonded Insulation Shield
Welded Copper Corrugated Sheath
Polyethylene Jacket with Extruded Semi-Conductive Outer Layer

Cable Data	
Voltage Characteristics (kV)	
Max Voltage Rating	120
BIL Rating	550
Temperatures (°C)	
Nominal Conductor	90
Max. Emergency Conductor	105/130
Short Circuit Conductor	250
Minimum Installation	-10
Design Characteristics	
Design Standards	AEIC, IEC
Typical Test Voltages	200 kV / 15 min.
XLPE Loss Factor	0.0005
Relative Permittivity	2.3

Southwire
HV Solutions

115 kV XLPE - Copper Conductor
Full Wall 800 mil XLPE Cu Corrugated Sheath

Conductor Size in kcmil		750	1000	1250	1500	1750	2000	2500	3000
Dimensional	Nominal								
Conductor Diameter	in	0.97	1.12	1.25	1.37	1.48	1.59	1.77	2.00
	(mm)	(24.7)	(28.5)	(31.8)	(34.8)	(37.6)	(40.4)	(45)	(50.8)
Diameter over Insulation	in	2.64	2.79	2.92	3.04	3.17	3.28	3.46	3.69
	(mm)	(67.1)	(70.8)	(74.2)	(77.3)	(80.6)	(83.2)	(87.9)	(93.7)
Diameter over Sheath	in	3.17	3.33	3.48	3.61	3.75	3.87	4.07	4.32
	(mm)	(80.5)	(84.6)	(88.3)	(91.7)	(95.3)	(98.2)	(103.4)	(109.7)
Overall Jacket Diameter	in	3.48	3.64	3.79	3.92	4.06	4.18	4.38	4.63
	(mm)	(88.4)	(92.5)	(96.3)	(99.6)	(103.2)	(106.2)	(111.3)	(117.6)
Total Weight	lbs/ft	6.2	7.3	8.3	9.2	10.2	11.2	13.1	15.2
Min. Bending Radius (pulling/training)	in	52/35	55/36	57/38	59/39	61/41	63/42	66/44	69/46
Maximum Pulling Tension	lbs	6,000	8,000	10,000	12,000	14,000	16,000	20,000	24,000
Typical Shipping Reel Size									
Flange x Traverse	in	138x95	138x95	138x95	138x95	138x95	138x95	158x95	158x95
Shipping Reel Capacity*	ft	>3,000	>3,000	2,650	2,700	2,550	2,425	2,250	2,150
Electrical									
Electrical Stress @ U_o									
Conductor Shield	kV/mm	5.4	5.2	5.0	4.9	4.7	4.7	4.5	4.4
Insulation Shield	kV/mm	2.1	2.2	2.3	2.3	2.4	2.4	2.4	2.5
Short Circuit for 0.5s**									
Conductor	kA	76.9	102.5	128.1	153.8	179.4	205	256.3	307.5
Sheath	kA	39.7	41.7	43.6	45.2	47	48.4	51	54.1
Conductor Resistance									
DC @ 20° C	Ω/kft	0.014	0.011	0.008	0.007	0.006	0.005	0.004	0.004
DC @ 90° C	Ω/kft	0.018	0.014	0.011	0.009	0.008	0.007	0.005	0.005
Capacitance	pF/ft	41.8	45.7	49.1	52.2	55.5	58.1	62.8	68.5
Charging Current	Amps/kft	1.04	1.14	1.22	1.30	1.38	1.49	1.58	1.72
Ampacity @ 90° C	per circuit								
Typical Single Ductbank***	Amps	740	860	960	1040	1110	1170	1270	1350
Power Rating	MVA	148	172	192	208	222	234	253	269
Typical Double Ductbank***	Amps	630	730	810	870	930	980	1060	1120
Power Rating	MVA	126	146	162	174	186	196	212	224

*Increased shipping reel capacity can be accomodated on request.
**Declared values for 30 mils copper sheath. Thicker sheath can accommodate more current.
***4ft top of duct, 1°C-m/W native, 0.8°C/W ductbank backfill, 25°C Ambient, 75% lf, 9" spacing, single-point or cross bonde

Seattle City Light

MATERIAL STANDARD

115 KV, 2500 KCMIL, 1/C, XLPE INSULATED CABLE

1. Scope

This material standard covers the detailed requirements for 115 kV, 2500 kcmil, cross-linked polyethylene (XLPE), single conductor cable used for the transmission of electric energy.

Industry designation: 1/C

This material standard applies to the following Seattle City Light Stock Number:

Stock Number	**012801**
Size	2500 kcmil

Cable joint and termination requirements are outside the scope of this Material Standard.

Commission testing requirements of installed cable prior to energization are outside the scope of this Material Standard.

2. Application

Cable is intended for use on a nominal 115 kV, three-phase, grounded, wye-connected power system.

	System Characteristics and Design Criteria	Reference
Stock Number	**012801**	SCL
Size	2500 kcmil	various
Frequency	60 Hz	SCL
Operating voltage, ph-ph		
nominal	115 kV	SCL
maximum	121 kV	SCL
Basic impulse voltage (BIL)	550 kV crest	SCL
Fault current		
symmetrical	35 kA	SCL
duration	30 cycles	SCL
Location	wet	SCL

Seattle City Light assumes responsibility for determining the normal ampacity rating of cable.

3. General Requirements

This detailed material standard is to be used in conjunction with the latest revision of Seattle City Light Material Standard 6050.00, "High Voltage, XLPE Insulated Cable – General."

4. Industry Standards

Cable shall meet the requirements of the following industry standards:

AEIC CS9-2006 – Specification for Extruded Insulation Power Cables and Their Accessories Rated Above 46kV through 345 kVAC

ICEA S-108-720-2004 – Standard for Extruded Insulation Power Cables Rated Above 46 through 345 kV

Refer to Material Standard 6050.00 to obtain the appropriate revision date for other referenced industry standards.

5. Construction

5.1 General

Unless indicated otherwise, all values cited below should be consistent with industry standards - they are repeated here for the convenience of the reader. Values or requirements different from industry standards are identified with the symbol ▲. In some situations, the ▲ symbol offers warning that special requirements are located in Material Standard 6050.00.

5.2 Conductor

	Requirements	Reference
Stock Number	**012801**	SCL
Size	2500 kcmil	various
Diameter		
minimum	1.788 in	ICEA S-108-720, Section 2.5
nominal	1.824 in	ASTM B8
maximum	1.860 in	ICEA S-108-720, Section 2.5
Metal	copper	ASTM B49

standards coordinator John Shipek

standards supervisor John Shipek

unit director Darnell Cola

5. Construction, continued

5.2 Conductor, continued

	Requirements	Reference
Stock Number	**012801**	SCL
Stranding type	concentric-lay	ASTM B8
Class	B	ASTM B8
Number of strands	127	ASTM B8, Table 1
Temper	soft drawn, annealed prior to stranding	ASTM B3
Lay, outer layer	left hand	ASTM B8, Section 5.5.1
Sealant for stranded conductors	not required or desired	ICEA S-108-720, Section 2.2

5.3 Conductor Shield (Stress Control Layer)

	Requirements	Reference
Stock Number	**012801**	SCL
Size	2500 kcmil	various
Thickness, minimum point	30 mil	ICEA S-108-720, Part 3, Table 3.1
Material	formulated with acetylene black ▲	SCL and AEIC CS9, Section 2.2.2

5.4 Insulation

	Requirements	Reference
Stock Number	**012801**	SCL
Size	2500 kcmil	various
Material	crosslinked polyethylene (XLPE) with no mineral fillers	ICEA S-108-720, Section 4.1
Approved material formulations	specified in general Material Standard	SCL 6050.00

5.4 Insulation, continued

	Requirements	Reference
Stock Number	**012801**	SCL
Thickness		
minimum	760 mil	SCL
nominal	800 mil	ICEA S-108-720, Appendix F, Table F-1
maximum	840 mil	SCL
Basic Impulse Level (BIL)	550 kV crest	ICEA S-108-720, Section 4.3, Table 4-6

5.5 Extruded Insulation Shield

	Requirements	Reference
Stock Number	**012801**	SCL
Size	2500 kcmil	various
Material	discharge-free (thermosetting material)	SCL
Thickness		
minimum point	40 mil	ICEA S-108-720, Section 5.2, Table 5-1
maximum point	100 mil	ICEA S-108-720, Section 5.2, Table 5-1

5.6 Metallic Shield/Sheath

	Requirements	Reference
Stock Number	**012801**	SCL
Size	2500 kcmil	various
Metal and type	welded corrugated copper or laminated copper foil longitudinally folded and bonded to the jacket	ICEA S-108-720, Part 6

5. Construction, continued

5.6 Metallic Shield/Sheath, continued

	Requirements	Reference
Stock Number	**012801**	SCL
Radial moisture barrier	required ▲	ICEA S-108-720, Section 6.4
Water blocking components for metallic shield	required ▲	ICEA S-108-720, Section 6.5

5.7 Jacket (Non-Metallic Covering)

	Requirements	Reference
Stock Number	**012801**	SCL
Size	2500 kcmil	various
Material	linear low density polyethylene (LLDPE)	ICEA S-108-720, Section 7.1.1
Color	black	ICEA S-108-720, Section 7.1.1
Thickness		
minimum point	100 mil	ICEA S-108-720, Section 7.2.1, Table 7-5
maximum point	160 mil	ICEA S-108-720, Section 7.2.1, Table 7-5
Semi-conducting coating	required	AEIC CS9, Section 2.6.3
Maximum diameter over jacket	4.32 in ▲	SCL preference

5.8 Assembly and Identification

	Requirements	Reference
Stock Number	**012801**	SCL
Size	2500 kcmil	various
Center strand identification	not required	ICEA S-108-720, Section 8.1.1
Sequential length marking	required ▲	ICEA S-108-720, Section 8.1.2

6. Packaging

	Requirements	Reference
Stock Number	**012801**	SCL
Size	2500 kcmil	various
Reel type	steel fluted	WC 26, Section 2.1.2
Flange diameter, maximum	as specified on purchase order	SCL preference
Outside width, maximum	as specified on purchase order	SCL preference
Drum diameter, minimum	as specified on purchase order	SCL preference
Length per reel, +1.5, -0%	as specified on purchase order	SCL preference

7. Issuance

	Requirements	Reference
Stock Number	**012801**	SCL
Size	2500 kcmil	various
Stock Unit	FT	SCL

8. Approved Manufacturers

Brugg Cables, LLC

General Cable / SILEC

J-Power Systems (JPS)

Prysmian

Southwire Company/Forte Power Systems

9. References

6050.00; "High Voltage, XLPE Insulated Cable – General"; SCL Material Standard

IEC 60840; *Power Cables with Extruded Insulation and Their Accessories for Rated Voltages above 30 kV (Um = 36 kV) up to 150 kV (Um = 170 kV) - Test Methods and Requirements;* International Electrotechnical Commission; April 2004 (Edition 3)

Risch, Bob; SCL Engineer, subject matter expert (bob.risch@seattle.gov)

Shipek, John; SCL Standards Engineer, subject matter expert and originator of 6050.25 (john.shipek@seattle.gov)

Summary Results

Study: MA-US-1&2 Yesler to Union Sub Ampacity Study, June 2011
Execution: W&U-1A-12"HP w insl-21'd,0'h 2500kcmilCu-2@603A@65.0h
Date: 6/6/2011
Frequency: 60 Hz
Conductor Resistances: IEC-228
Fraction of conductor current returning through sheath for single phase cables: 1

Installation Type: Multiple Duct Banks Backfills

Parameter						Unit	Value
Ambient Soil Temperature at Installation Depth						°C	36.4
Thermal Resistivity of Native Soil						°C.m/W	1
Layers		Dimensions [ft]				Type	Thermal Resistivity [°C.m/W]
No.	Name	X Center	Y Center	Width	Height		
1	DB 4X2	0	23.032	1.854	4.063	Standard ductbank	0.6
2	Backfill	0	10.495	2.001	21.001	Backfill	0.75
Heat Source Type							Temperature
Heat Source Temperature						°C	185
Heat Source X Center						ft	0
Heat Source Y Center						ft	8
Heat Source Diameter						inch	12
Heat Source Insulation Diameter						inch	24
Heat Source Insulation Thermal Resistivity						°C.m/W	78.084

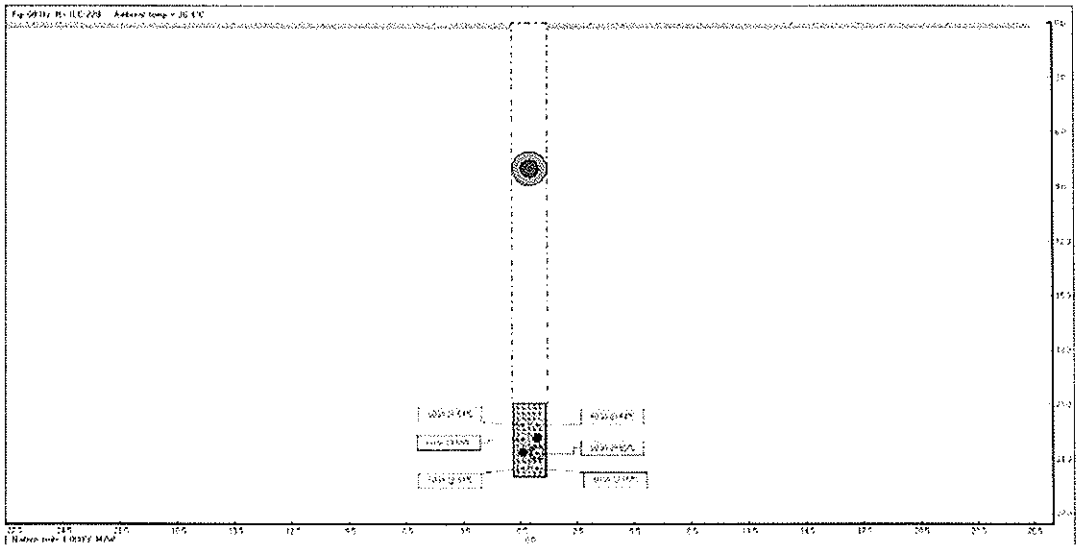

Summary Results

Solution converged

Cable\Cable type no	Circuit	Phase	Location		Load Factor	Temperature	Ampacity
			X[ft]	Y[ft]	[p.u.]	[°C]	[A]
1 \ 1	1	A	0.401	22.159	0.8	64	603
2 \ 1	1	B	-0.401	22.159	0.8	64.3	603
3 \ 1	1	C	-0.401	22.961	0.8	64.9	603
4 \ 1	2	A	-0.401	24.565	0.8	64.3	603
5 \ 1	2	B	0.401	24.565	0.8	64.5	603
6 \ 1	2	C	0.401	23.763	0.8	65	603

Cables input data

Study: MA-US-1&2 Yesler to Union Sub Ampacity Study, June 2011
Execution: W&U-1A-12"HP w insl-21'd,0'h 2500kcmilCu-2@603A@65.0h
Date: 6/6/2011

No	Description	Unit	1
General cable information			
1	Cable type no		1
2	Number of cores		1
3	Voltage	kV	115
4	Conductor area	$inch^2$	1.9631
5	Maximum Steady-State Conductor Temperature	°C	90
6	Maximum Emergency Conductor Temperature	°C	110
Construction			
Conductor			
7	Material		copper
8	Resistivity @20°C	uΩ.cm	1.7241
9	Temperature coefficient	1/K	0.00393
10	Reciprocal of temperature coefficient of resistance (BETA)	°C	234.5
11	Volumetric specific heat (SH)	$J/K.m^3$	3.45
12	Construction		4 segments
13	Is cable dried?		No
14	ks (Skin effect coefficient)		0.44
15	kp (Proximity effect coefficient)		0.37
16	Diameter	inch	1.77
Conductor shield			
17	Is layer present?		Yes
18	Thickness	inch	0.05
19	Diameter	inch	1.87
Insulation			
20	Is layer present?		Yes
21	Material		XLPE (unfilled)
22	Thermal resistivity	K.m/w	3.5
23	Dielectric loss factor - (tan δ)		0.001
24	Relative permittivity (ε)		2.5
25	Thickness	inch	0.8
26	Diameter	inch	3.47
Insulation screen			
27	Is layer present?		Yes
28	Material		semi-conducting
29	Thickness	inch	0.05
30	Diameter	inch	3.57

Sheath

31	Is layer present?		Yes
32	Is around each core? (Only for Three core cable)		No
33	Material		copper
34	Resistivity @20°C	uΩ.cm	1.7241
35	Temperature coefficient	1/K	0.00393
36	Reciprocal of temperature coefficient of resistance (BETA)	°C	234.5
37	Volumetric specific heat (SH)	$J/K.m^3$	3.45
38	Corrugated construction		Corrugated
39	Thickness of the corrugated sheath	inch	0.03
40	Inner radius of the corrugated sheath	inch	1.91
41	Outer radius of the corrugated sheath	inch	2.035
42	Thickness	inch	0.25
43	Diameter	inch	4.07

Jacket

44	Is layer present?		Yes
45	Material		polyethylene
46	Thermal resistivity	K.m/w	3.5
47	Thickness	inch	0.155
48	Diameter	inch	4.38

Overall cable diameter

49	Diameter	inch	4.38

No	Description/Value	Unit	1
SPECIFIC INSTALLATION DATA			
Bonding			
1	1-CON, sheaths single point bonded, triang. configuration		Yes
Loss factor constant			
2	Loss factor constant		0.3
Duct construction			
3	PVC duct in concrete or buried		Yes
4	Resistivity (RH)		6
Cables touching			
5	Single conductor cables NOT touching		Yes

No	Symbol	Description	Unit	1	2	3	4	5	6
Temperature calculations									
1		Cable type no		1	1	1	1	1	1
2		Circuit no		1	1	1	2	2	2
3		Phase		A	B	C	A	B	C
4	θ_c	Conductor temperature	°C	64	64.3	64.9	64.3	64.5	65
5	θ_i	Sheath/Shield temperature	°C	61	61.3	61.9	61.2	61.5	62
6	θ_j	Armour/Pipe or Jacket temperature	°C	60.6	60.9	61.5	60.8	61.1	61.6
7	θ_s	Exterior duct temperature	°C	4.1	4.1	4.1	4.3	4.3	4.2
8	θ_o	Ambient temperature	°C	36.4	36.4	36.4	36.4	36.4	36.4

Cable type no: 1
Cable type: EXTRUDED
Cable ID: 115C2.5MX5
Cable title: 115KV 2500 KCMIL CU XLPE 800mil Southwire

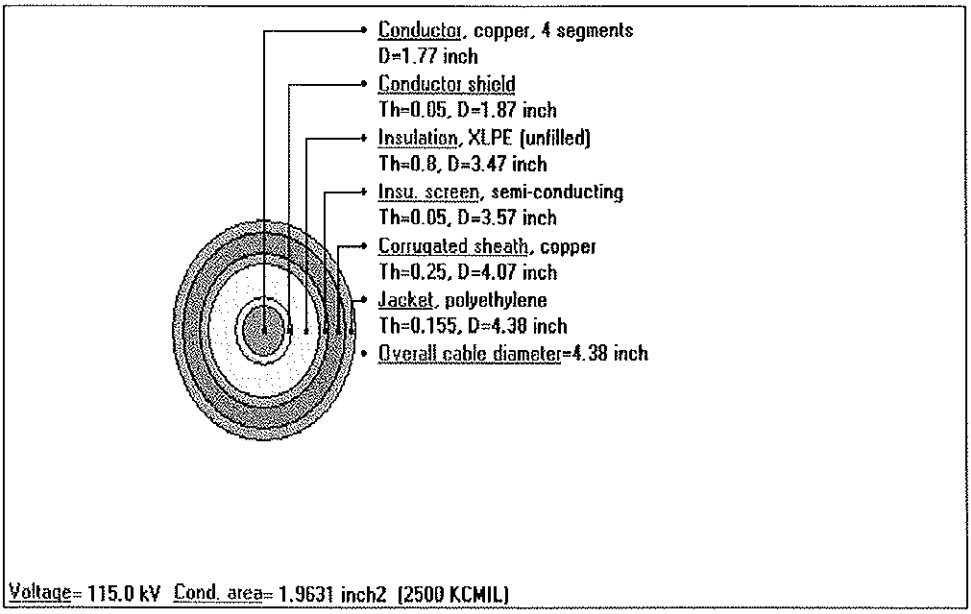

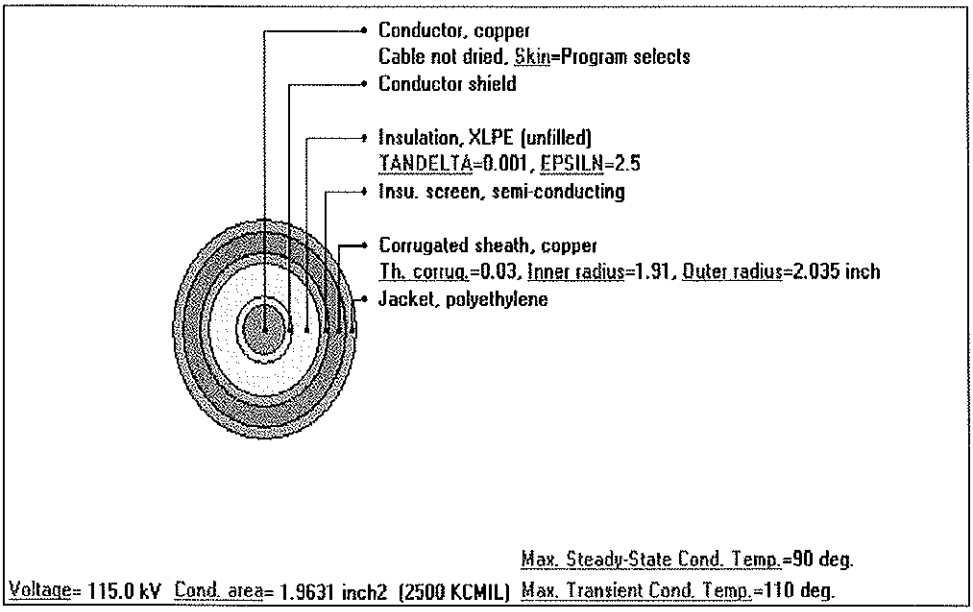

Summary Results

Study: MA-US-1&2 Yesler to Union Sub Ampacity Study, June 2011
Execution: W&U-1B-12"HP w insl-21'd,5'h 2500kcmilCu-2@603A@89.8h
Date: 6/6/2011
Frequency: 60 Hz
Conductor Resistances: IEC-228
Fraction of conductor current returning through sheath for single phase cables: 1

Installation Type: Multiple Duct Banks Backfills

Parameter						Unit	Value
Ambient Soil Temperature at Installation Depth						°C	36.4
Thermal Resistivity of Native Soil						°C.m/W	1
Layers		Dimensions [ft]				Type	Thermal Resistivity [°C.m/W]
No.	Name	X Center	Y Center	Width	Height		
1	DB 4X2	0	23.032	1.854	4.063	Standard ductbank	0.6
2	Backfill	0	10.495	2.001	21.001	Backfill	0.75
3	Backfill	-1.48	23.027	1.073	4.019	Backfill	0.75
4	Backfill	1.48	23.027	1.073	4.019	Backfill	0.75
5	Backfill	-1.517	10.48	1.001	21.001	Backfill	0.75
6	Backfill	1.517	10.48	1.001	21.001	Backfill	0.75
Heat Source Type							Temperature
Heat Source Temperature						°C	185
Heat Source X Center						ft	-6.43
Heat Source Y Center						ft	8
Heat Source Diameter						inch	12
Heat Source Insulation Diameter						inch	26
Heat Source Insulation Thermal Resistivity						°C.m/W	54.692

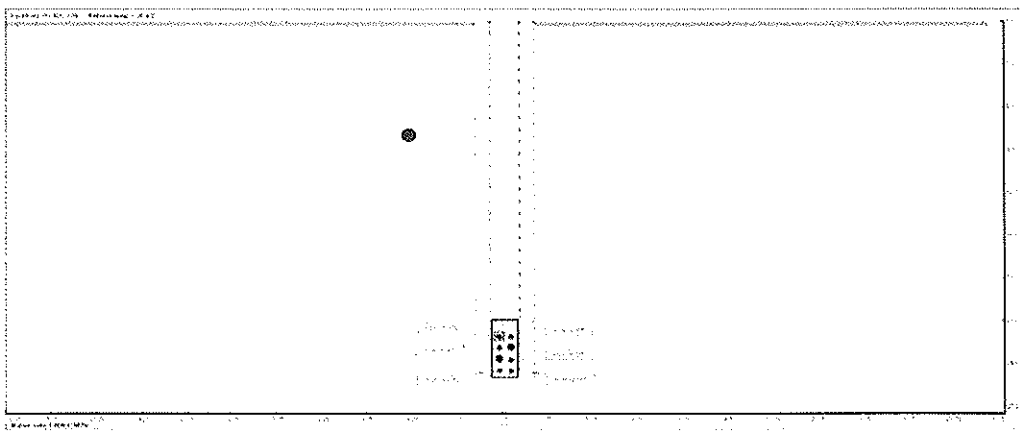

Summary Results

Solution converged

Cable\Cable type no	Circuit	Phase	Location		Load Factor	Temperature	Ampacity
			X[ft]	Y[ft]	[p.u.]	[°C]	[A]
1\1	1	A	0.401	22.159	0.8	88.8	603
2\1	1	B	-0.401	22.159	0.8	89.8	603
3\1	1	C	-0.401	22.961	0.8	89.6	603
4\1	2	A	-0.401	24.565	0.8	87.7	603
5\1	2	B	0.401	24.565	0.8	87.5	603
6\1	2	C	0.401	23.763	0.8	88.5	603

Cables input data

Study: MA-US-1&2 Yesler to Union Sub Ampacity Study, June 2011
Execution: W&U-1B-12"HP w insl-21'd,5'h 2500kcmilCu-2@603A@89.8h
Date: 6/6/2011

No	Description	Unit	1
General cable information			
1	Cable type no		1
2	Number of cores		1
3	Voltage	kV	115
4	Conductor area	$inch^2$	1.9631
5	Maximum Steady-State Conductor Temperature	°C	90
6	Maximum Emergency Conductor Temperature	°C	110
Construction			
Conductor			
7	Material		copper
8	Resistivity @20°C	uΩ.cm	1.7241
9	Temperature coefficient	1/K	0.00393
10	Reciprocal of temperature coefficient of resistance (BETA)	°C	234.5
11	Volumetric specific heat (SH)	$J/K.m^3$	3.45
12	Construction		4 segments
13	Is cable dried?		No
14	ks (Skin effect coefficient)		0.44
15	kp (Proximity effect coefficient)		0.37
16	Diameter	inch	1.77
Conductor shield			
17	Is layer present?		Yes
18	Thickness	inch	0.05
19	Diameter	inch	1.87
Insulation			
20	Is layer present?		Yes
21	Material		XLPE (unfilled)
22	Thermal resistivity	K.m/w	3.5
23	Dielectric loss factor - (tan δ)		0.001
24	Relative permittivity (ε)		2.5
25	Thickness	inch	0.8
26	Diameter	inch	3.47
Insulation screen			
27	Is layer present?		Yes
28	Material		semi-conducting
29	Thickness	inch	0.05
30	Diameter	inch	3.57

Sheath

31	Is layer present?		Yes
32	Is around each core? (Only for Three core cable)		No
33	Material		copper
34	Resistivity @20°C	uΩ.cm	1.7241
35	Temperature coefficient	1/K	0.00393
36	Reciprocal of temperature coefficient of resistance (BETA)	°C	234.5
37	Volumetric specific heat (SH)	$J/K.m^3$	3.45
38	Corrugated construction		Corrugated
39	Thickness of the corrugated sheath	inch	0.03
40	Inner radius of the corrugated sheath	inch	1.91
41	Outer radius of the corrugated sheath	inch	2.035
42	Thickness	inch	0.25
43	Diameter	inch	4.07

Jacket

44	Is layer present?		Yes
45	Material		polyethylene
46	Thermal resistivity	K.m/w	3.5
47	Thickness	inch	0.155
48	Diameter	inch	4.38

Overall cable diameter

49	Diameter	inch	4.38

No	Description/Value	Unit	1
SPECIFIC INSTALLATION DATA			
Bonding			
1	1-CON, sheaths single point bonded, triang. configuration		Yes
Loss factor constant			
2	Loss factor constant		0.3
Duct construction			
3	PVC duct in concrete or buried		Yes
4	Resistivity (RH)		6
Cables touching			
5	Single conductor cables NOT touching		Yes

No	Symbol	Description	Unit	1	2	3	4	5	6
Temperature calculations									
1		Cable type no		1	1	1	1	1	1
2		Circuit no		1	1	1	2	2	2
3		Phase		A	B	C	A	B	C
4	θ_c	Conductor temperature	°C	88.8	89.8	89.6	87.7	87.5	88.5
5	θ_i	Sheath/Shield temperature	°C	85.5	86.6	86.4	84.5	84.2	85.3
6	θ_j	Armour/Pipe or Jacket temperature	°C	85.1	86.1	86	84.1	83.8	84.9
7	θ_s	Exterior duct temperature	°C	4.1	4.1	4.2	4.3	4.4	4.3
8	θ_a	Ambient temperature	°C	36.4	36.4	36.4	36.4	36.4	36.4

Cable type no: 1
Cable type: EXTRUDED
Cable ID: 11SC2.5MX5
Cable title: 115KV 2500 KCMIL CU XLPE 800mil Southwire

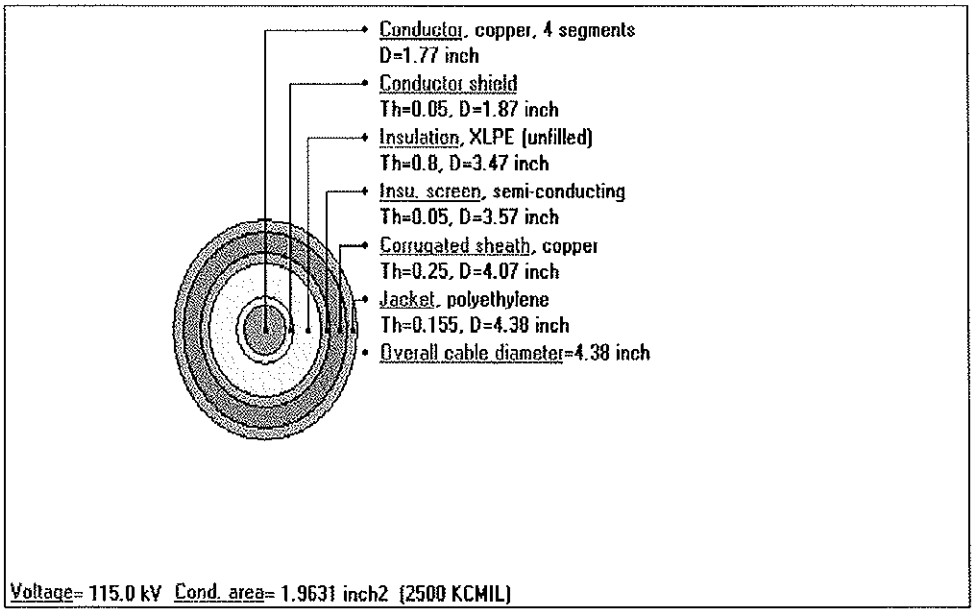

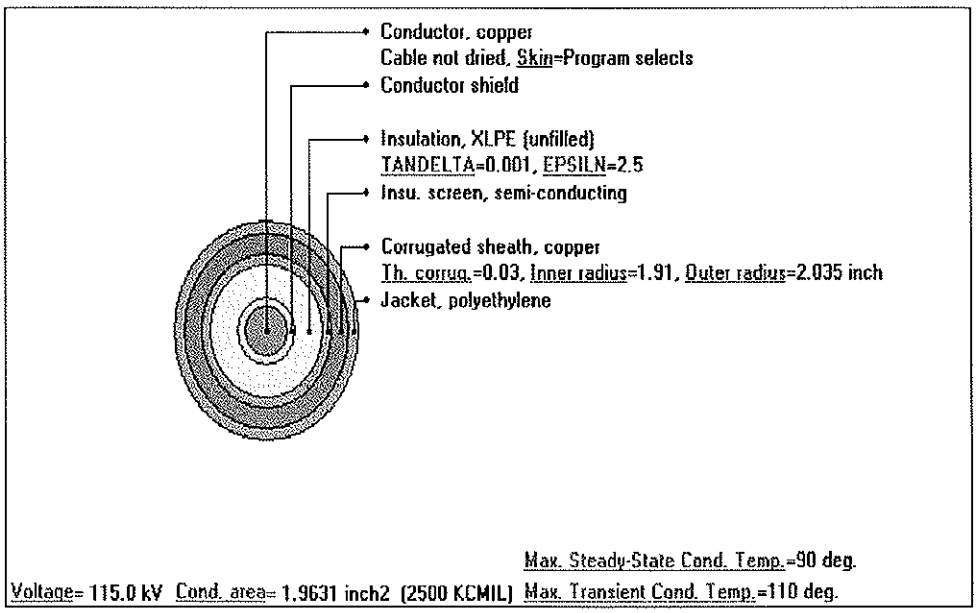

Summary Results

Study: MA-US-1&2 Yesler to Union Sub Ampacity Study, June 2011
Execution: W&U-1C-12"HP w insl-21'd,0'h 2500kcmilCu-2@603A@68.1h
Date: 6/10/2011
Frequency: 60 Hz
Conductor Resistances: IEC-228
Fraction of conductor current returning through sheath for single phase cables: 1

Installation Type: Multiple Duct Banks Backfills

Parameter						Unit	Value
Ambient Soil Temperature at Installation Depth						°C	36.4
Thermal Resistivity of Native Soil						°C.m/W	1
Layers		Dimensions [ft]				Type	Thermal Resistivity [°C.m/W]
No.	Name	X Center	Y Center	Width	Height		
1	DB 4X2	0	23.032	1.854	4.063	Standard ductbank	0.6
2	Backfill	0	10.495	2.001	21.001	Backfill	0.75
3	Backfill	-1.172	15.51	0.331	19.019	Backfill	8.333
4	Backfill	1.172	15.51	0.331	19.019	Backfill	8.333
Heat Source Type							Temperature
Heat Source Temperature						°C	185
Heat Source X Center						ft	0
Heat Source Y Center						ft	8
Heat Source Diameter						inch	12
Heat Source Insulation Diameter						inch	24
Heat Source Insulation Thermal Resistivity						°C.m/W	78.084

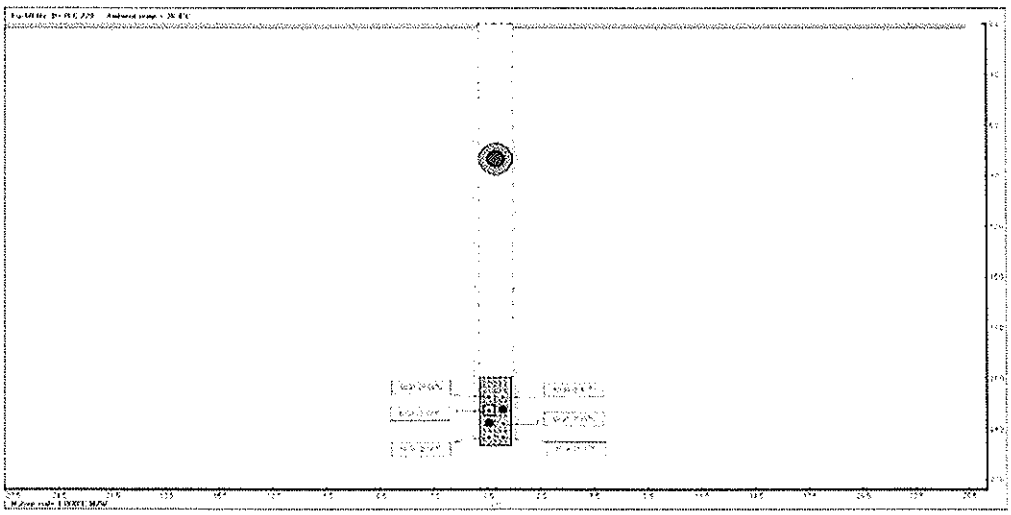

Summary Results

Solution converged

Cable\Cable type no	Circuit	Phase	Location		Load Factor	Temperature	Ampacity
			X[ft]	Y[ft]	[p.u.]	[°C]	[A]
1\1	1	A	0.401	22.159	0.8	67.2	603
2\1	1	B	-0.401	22.159	0.8	67.6	603
3\1	1	C	-0.401	22.961	0.8	68.1	603
4\1	2	A	-0.401	24.565	0.8	66.3	603
5\1	2	B	0.401	24.565	0.8	66.6	603
6\1	2	C	0.401	23.763	0.8	68	603

Cables input data

Study: MA-US-1&2 Yesler to Union Sub Ampacity Study, June 2011
Execution: W&U-1C-12"HP w insl-21'd,0'h 2500kcmilCu-2@603A@68.1h
Date: 6/10/2011

No	Description	Unit	1
General cable information			
1	Cable type no		1
2	Number of cores		1
3	Voltage	kV	115
4	Conductor area	$inch^2$	1.9631
5	Maximum Steady-State Conductor Temperature	°C	90
6	Maximum Emergency Conductor Temperature	°C	110
Construction			
Conductor			
7	Material		copper
8	Resistivity @20°C	uΩ.cm	1.7241
9	Temperature coefficient	1/K	0.00393
10	Reciprocal of temperature coefficient of resistance (BETA)	°C	234.5
11	Volumetric specific heat (SH)	$J/K.m^3$	3.45
12	Construction		4 segments
13	Is cable dried?		No
14	ks (Skin effect coefficient)		0.44
15	kp (Proximity effect coefficient)		0.37
16	Diameter	inch	1.77
Conductor shield			
17	Is layer present?		Yes
18	Thickness	inch	0.05
19	Diameter	inch	1.87
Insulation			
20	Is layer present?		Yes
21	Material		XLPE (unfilled)
22	Thermal resistivity	K.m/w	3.5
23	Dielectric loss factor - (tan δ)		0.001
24	Relative permittivity (ε)		2.5
25	Thickness	inch	0.8
26	Diameter	inch	3.47
Insulation screen			
27	Is layer present?		Yes
28	Material		semi-conducting
29	Thickness	inch	0.05
30	Diameter	inch	3.57

Sheath

31	Is layer present?		Yes
32	Is around each core? (Only for Three core cable)		No
33	Material		copper
34	Resistivity @20°C	uΩ.cm	1.7241
35	Temperature coefficient	1/K	0.00393
36	Reciprocal of temperature coefficient of resistance (BETA)	°C	234.5
37	Volumetric specific heat (SH)	$J/K.m^3$	3.45
38	Corrugated construction		Corrugated
39	Thickness of the corrugated sheath	inch	0.03
40	Inner radius of the corrugated sheath	inch	1.91
41	Outer radius of the corrugated sheath	inch	2.035
42	Thickness	inch	0.25
43	Diameter	inch	4.07

Jacket

44	Is layer present?		Yes
45	Material		polyethylene
46	Thermal resistivity	K.m/w	3.5
47	Thickness	inch	0.155
48	Diameter	inch	4.38

Overall cable diameter

49	Diameter	inch	4.38

No	Description/Value	Unit	1
SPECIFIC INSTALLATION DATA			
Bonding			
1	1-CON, sheaths single point bonded, triang. configuration		Yes
Loss factor constant			
2	Loss factor constant		0.3
Duct construction			
3	PVC duct in concrete or buried		Yes
4	Resistivity (RH)		6
Cables touching			
5	Single conductor cables NOT touching		Yes

No	Symbol	Description	Unit	1	2	3	4	5	6
Temperature calculations									
1		Cable type no		1	1	1	1	1	1
2		Circuit no		1	1	1	2	2	2
3		Phase		A	B	C	A	B	C
4	θ_c	Conductor temperature	°C	67.2	67.6	68.1	66.3	66.6	68
5	θ_i	Sheath/Shield temperature	°C	64.2	64.6	65.1	63.2	63.5	64.9
6	θ_j	Armour/Pipe or Jacket temperature	°C	63.8	64.1	64.7	62.8	63.1	64.5
7	θ_s	Exterior duct temperature	°C	4.8	4.9	4.9	4.7	4.8	4.9
8	θ_a	Ambient temperature	°C	36.4	36.4	36.4	36.4	36.4	36.4

Cable type no: 1
Cable type: EXTRUDED
Cable ID: 115C2.5MX5
Cable title: 115KV 2500 KCMIL CU XLPE 800mil Southwire

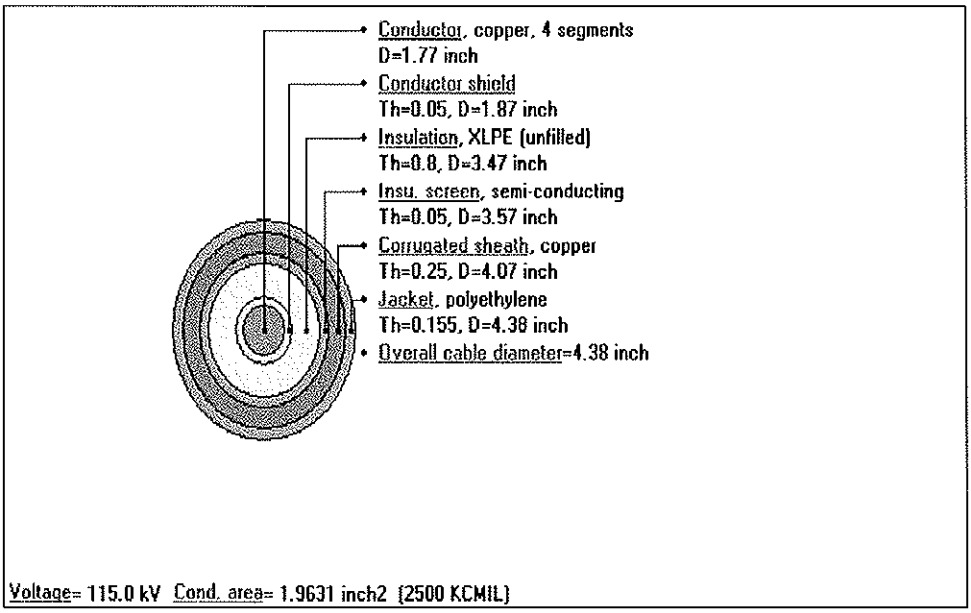

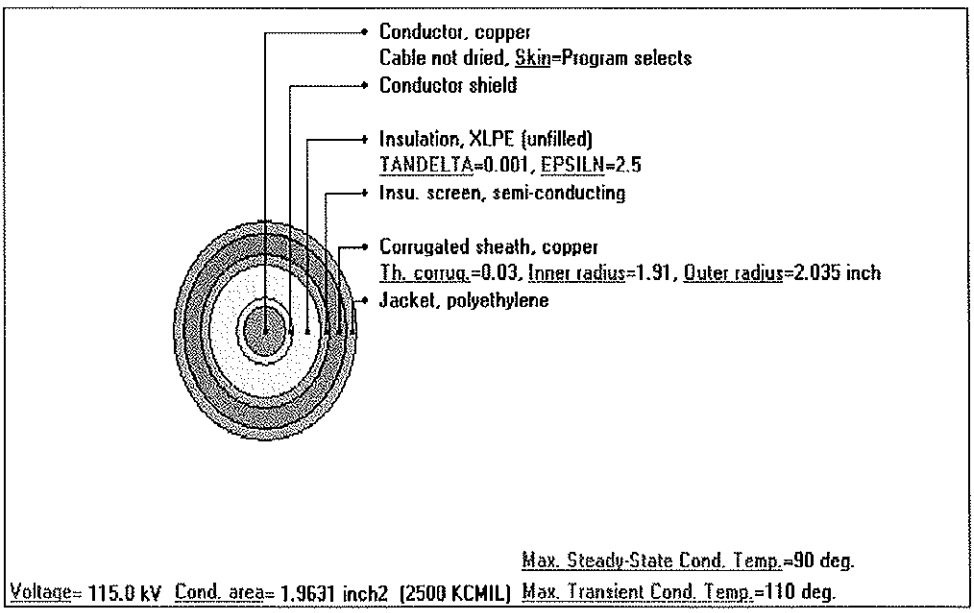

Summary Results

Study: MA-US-1&2 Yesler to Union Sub Ampacity Study, June 2011
Execution: W&U-1D-12"HP w insl-21'd,7'h 2500kcmilCu-2@603A@89.6h
Date: 6/10/2011
Frequency: 60 Hz
Conductor Resistances: IEC-228
Fraction of conductor current returning through sheath for single phase cables: 1

Installation Type: Multiple Duct Banks Backfills

Parameter						Unit	Value
Ambient Soil Temperature at Installation Depth						°C	36.4
Thermal Resistivity of Native Soil						°C.m/W	1
Layers		Dimensions [ft]				Type	Thermal Resistivity [°C.m/W]
No.	Name	X Center	Y Center	Width	Height		
1	DB 4X2	0	23.032	1.854	4.063	Standard ductbank	0.6
2	Backfill	0	10.495	2.001	21.001	Backfill	0.75
3	Backfill	-1.48	23.027	1.073	4.019	Backfill	0.75
4	Backfill	1.48	23.027	1.073	4.019	Backfill	0.75
5	Backfill	-1.517	10.48	1.001	21.001	Backfill	0.75
6	Backfill	1.517	10.48	1.001	21.001	Backfill	0.75
7	Backfill	-2.17	15.5	0.328	18.999	Backfill	8.33
8	Backfill	2.172	15.5	0.331	18.999	Backfill	8.33
Heat Source Type							Temperature
Heat Source Temperature						°C	185
Heat Source X Center						ft	-8.43
Heat Source Y Center						ft	8
Heat Source Diameter						inch	12
Heat Source Insulation Diameter						inch	26
Heat Source Insulation Thermal Resistivity						°C.m/W	54.692

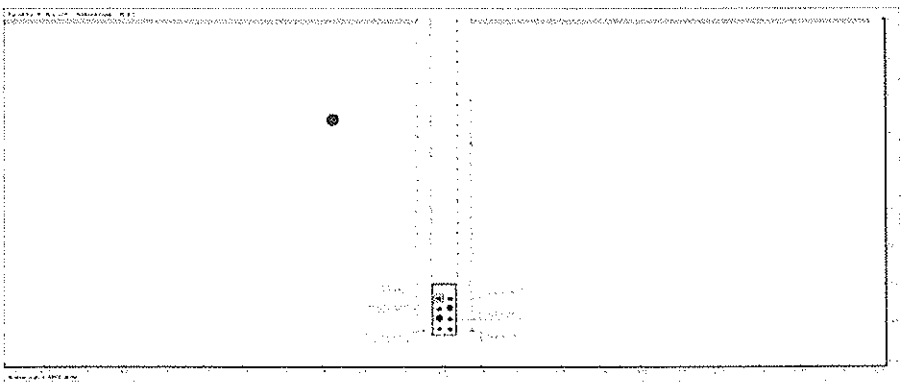

Summary Results

Solution converged

Cable\Cable type no	Circuit	Phase	Location		Load Factor	Temperature	Ampacity
			X[ft]	Y[ft]	[p.u.]	[°C]	[A]
1\1	1	A	0.401	22.159	0.8	88.5	603
2\1	1	B	-0.401	22.159	0.8	89.6	603
3\1	1	C	-0.401	22.961	0.8	89.5	603
4\1	2	A	-0.401	24.565	0.8	87.4	603
5\1	2	B	0.401	24.565	0.8	87	603
6\1	2	C	0.401	23.763	0.8	88.3	603

Cables input data

Study: MA-US-1&2 Yesler to Union Sub Ampacity Study, June 2011
Execution: W&U-1D-12"HP w insl-21'd,7'h 2500kcmilCu-2@603A@89.6h
Date: 6/10/2011

No	Description	Unit	1
General cable information			
1	Cable type no		1
2	Number of cores		1
3	Voltage	kV	115
4	Conductor area	$inch^2$	1.9631
5	Maximum Steady-State Conductor Temperature	°C	90
6	Maximum Emergency Conductor Temperature	°C	110
Construction			
Conductor			
7	Material		copper
8	Resistivity @20°C	uΩ.cm	1.7241
9	Temperature coefficient	1/K	0.00393
10	Reciprocal of temperature coefficient of resistance (BETA)	°C	234.5
11	Volumetric specific heat (SH)	$J/K.m^3$	3.45
12	Construction		4 segments
13	Is cable dried?		No
14	ks (Skin effect coefficient)		0.44
15	kp (Proximity effect coefficient)		0.37
16	Diameter	inch	1.77
Conductor shield			
17	Is layer present?		Yes
18	Thickness	inch	0.05
19	Diameter	inch	1.87
Insulation			
20	Is layer present?		Yes
21	Material		XLPE (unfilled)
22	Thermal resistivity	K.m/w	3.5
23	Dielectric loss factor - (tan δ)		0.001
24	Relative permittivity (ε)		2.5
25	Thickness	inch	0.8
26	Diameter	inch	3.47
Insulation screen			
27	Is layer present?		Yes
28	Material		semi-conducting
29	Thickness	inch	0.05
30	Diameter	inch	3.57

Sheath

31	Is layer present?		Yes
32	Is around each core? (Only for Three core cable)		No
33	Material		copper
34	Resistivity @20°C	uΩ.cm	1.7241
35	Temperature coefficient	1/K	0.00393
36	Reciprocal of temperature coefficient of resistance (BETA)	°C	234.5
37	Volumetric specific heat (SH)	$J/K.m^3$	3.45
38	Corrugated construction		Corrugated
39	Thickness of the corrugated sheath	inch	0.03
40	Inner radius of the corrugated sheath	inch	1.91
41	Outer radius of the corrugated sheath	inch	2.035
42	Thickness	inch	0.25
43	Diameter	inch	4.07

Jacket

44	Is layer present?		Yes
45	Material		polyethylene
46	Thermal resistivity	K.m/w	3.5
47	Thickness	inch	0.155
48	Diameter	inch	4.38

Overall cable diameter

49	Diameter	inch	4.38

No	Description/Value	Unit	1
SPECIFIC INSTALLATION DATA			
Bonding			
1	1-CON, sheaths single point bonded, triang. configuration		Yes
Loss factor constant			
2	Loss factor constant		0.3
Duct construction			
3	PVC duct in concrete or buried		Yes
4	Resistivity (RH)		6
Cables touching			
5	Single conductor cables NOT touching		Yes

No	Symbol	Description	Unit	1	2	3	4	5	6
Temperature calculations									
1		Cable type no		1	1	1	1	1	1
2		Circuit no		1	1	1	2	2	2
3		Phase		A	B	C	A	B	C
4	θ_c	Conductor temperature	°C	88.5	89.6	89.5	87.4	87	88.3
5	θ_i	Sheath/Shield temperature	°C	85.3	86.4	86.3	84.2	83.8	85.1
6	θ_j	Armour/Pipe or Jacket temperature	°C	84.8	86	85.9	83.7	83.4	84.6
7	θ_s	Exterior duct temperature	°C	4.5	4.5	4.5	4.6	4.6	4.6
8	θ_a	Ambient temperature	°C	36.4	36.4	36.4	36.4	36.4	36.4

Cable type no: 1
Cable type: EXTRUDED
Cable ID: 115C2.5MX5
Cable title: 115KV 2500 KCMIL CU XLPE 800mil Southwire

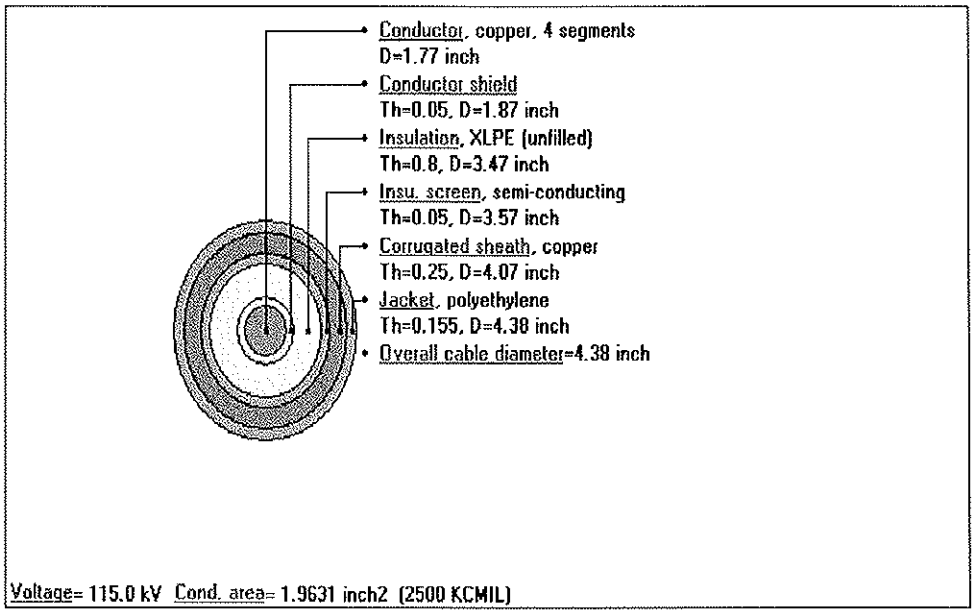

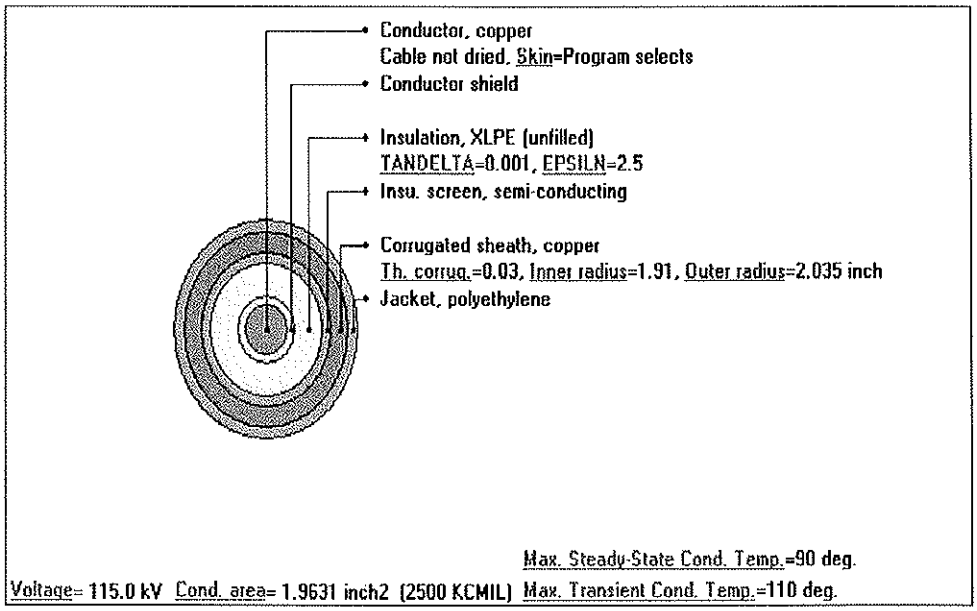

Summary Results

Study: MA-US-1&2 Yesler to Union Sub Ampacity Study, June 2011
Execution: W&U-2A-12"HP w insl-18'd,0'h 2500kcmilCu-2@603A@64.3h
Date: 6/6/2011
Frequency: 60 Hz
Conductor Resistances: IEC-228
Fraction of conductor current returning through sheath for single phase cables: 1

Installation Type: Multiple Duct Banks Backfills

Parameter						Unit	Value
Ambient Soil Temperature at Installation Depth						°C	36.4
Thermal Resistivity of Native Soil						°C.m/W	1
Layers		Dimensions [ft]				Type	Thermal Resistivity [°C.m/W]
No.	Name	X Center	Y Center	Width	Height		
1	DB 4X2	0	20.032	1.854	4.063	Standard ductbank	0.6
2	Backfill	0	8.982	2.001	17.999	Backfill	0.75
Heat Source Type							Temperature
Heat Source Temperature						°C	185
Heat Source X Center						ft	0
Heat Source Y Center						ft	7
Heat Source Diameter						inch	12
Heat Source Insulation Diameter						inch	24
Heat Source Insulation Thermal Resistivity						°C.m/W	78.084

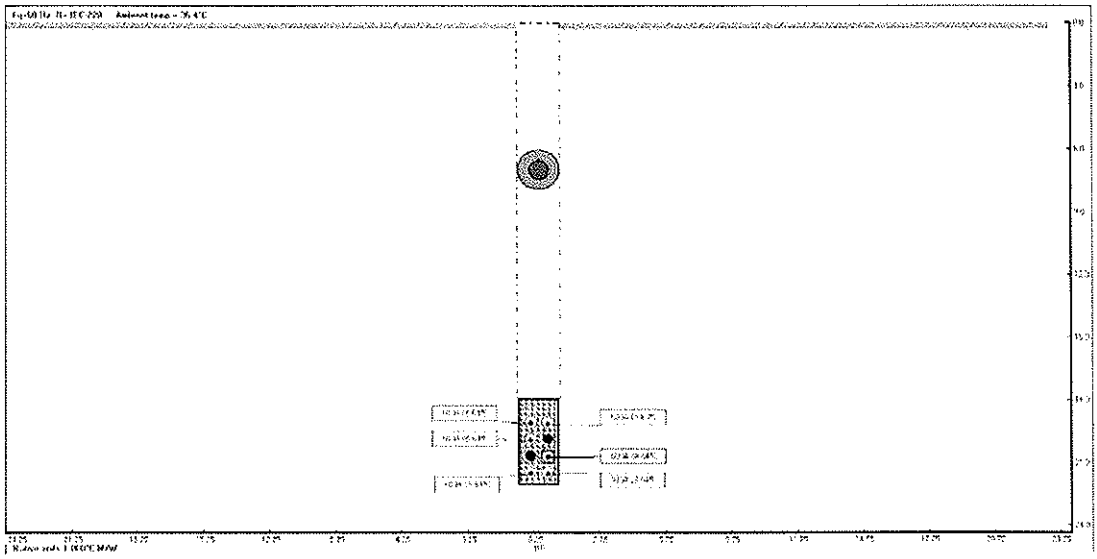

Summary Results

Solution converged

Cable\Cable type no	Circuit	Phase	Location		Load Factor	Temperature	Ampacity
			X[ft]	Y[ft]	[p.u.]	[°C]	[A]
1\1	1	A	0.401	19.159	0.8	63.3	603
2\1	1	B	-0.401	19.159	0.8	63.6	603
3\1	1	C	-0.401	19.961	0.8	64.2	603
4\1	2	A	-0.401	21.565	0.8	63.5	603
5\1	2	B	0.401	21.565	0.8	63.8	603
6\1	2	C	0.401	20.763	0.8	64.3	603

Cables input data

Study: MA-US-1&2 Yesler to Union Sub Ampacity Study, June 2011
Execution: W&U-2A-12"HP w insi-18'd,0'h 2500kcmilCu-2@603A@64.3h
Date: 6/6/2011

No	Description	Unit	1
General cable information			
1	Cable type no		1
2	Number of cores		1
3	Voltage	kV	115
4	Conductor area	$inch^2$	1.9631
5	Maximum Steady-State Conductor Temperature	°C	90
6	Maximum Emergency Conductor Temperature	°C	110
Construction			
Conductor			
7	Material		copper
8	Resistivity @20°C	uΩ.cm	1.7241
9	Temperature coefficient	1/K	0.00393
10	Reciprocal of temperature coefficient of resistance (BETA)	°C	234.5
11	Volumetric specific heat (SH)	$J/K.m^3$	3.45
12	Construction		4 segments
13	Is cable dried?		No
14	ks (Skin effect coefficient)		0.44
15	kp (Proximity effect coefficient)		0.37
16	Diameter	inch	1.77
Conductor shield			
17	Is layer present?		Yes
18	Thickness	inch	0.05
19	Diameter	inch	1.87
Insulation			
20	Is layer present?		Yes
21	Material		XLPE (unfilled)
22	Thermal resistivity	K.m/w	3.5
23	Dielectric loss factor - (tan δ)		0.001
24	Relative permittivity (ε)		2.5
25	Thickness	inch	0.8
26	Diameter	inch	3.47
Insulation screen			
27	Is layer present?		Yes
28	Material		semi-conducting
29	Thickness	inch	0.05
30	Diameter	inch	3.57

Sheath

31	Is layer present?		Yes
32	Is around each core? (Only for Three core cable)		No
33	Material		copper
34	Resistivity @20°C	uΩ.cm	1.7241
35	Temperature coefficient	1/K	0.00393
36	Reciprocal of temperature coefficient of resistance (BETA)	°C	234.5
37	Volumetric specific heat (SH)	$J/K.m^3$	3.45
38	Corrugated construction		Corrugated
39	Thickness of the corrugated sheath	inch	0.03
40	Inner radius of the corrugated sheath	inch	1.91
41	Outer radius of the corrugated sheath	inch	2.035
42	Thickness	inch	0.25
43	Diameter	inch	4.07

Jacket

44	Is layer present?		Yes
45	Material		polyethylene
46	Thermal resistivity	K.m/w	3.5
47	Thickness	inch	0.155
48	Diameter	inch	4.38

Overall cable diameter

49	Diameter	inch	4.38

No	Description/Value	Unit	1

SPECIFIC INSTALLATION DATA

Bonding

1	1-CON, sheaths single point bonded, triang. configuration		Yes

Loss factor constant

2	Loss factor constant		0.3

Duct construction

3	PVC duct in concrete or buried		Yes
4	Resistivity (RH)		6

Cables touching

5	Single conductor cables NOT touching		Yes

No	Symbol	Description	Unit	1	2	3	4	5	6

Temperature calculations

1		Cable type no		1	1	1	1	1	1
2		Circuit no		1	1	1	2	2	2
3		Phase		A	B	C	A	B	C
4	θ_c	Conductor temperature	°C	63.3	63.6	64.2	63.5	63.8	64.3
5	θ_i	Sheath/Shield temperature	°C	60.3	60.6	61.2	60.5	60.8	61.2
6	θ_j	Armour/Pipe or Jacket temperature	°C	59.9	60.2	60.8	60.1	60.4	60.8
7	θ_s	Exterior duct temperature	°C	3.9	3.9	4	4.1	4.2	4.1
8	θ_a	Ambient temperature	°C	36.4	36.4	36.4	36.4	36.4	36.4

Cable type no: 1
Cable type: EXTRUDED
Cable ID: 115C2.5MX5
Cable title: 115KV 2500 KCMIL CU XLPE 800mil Southwire

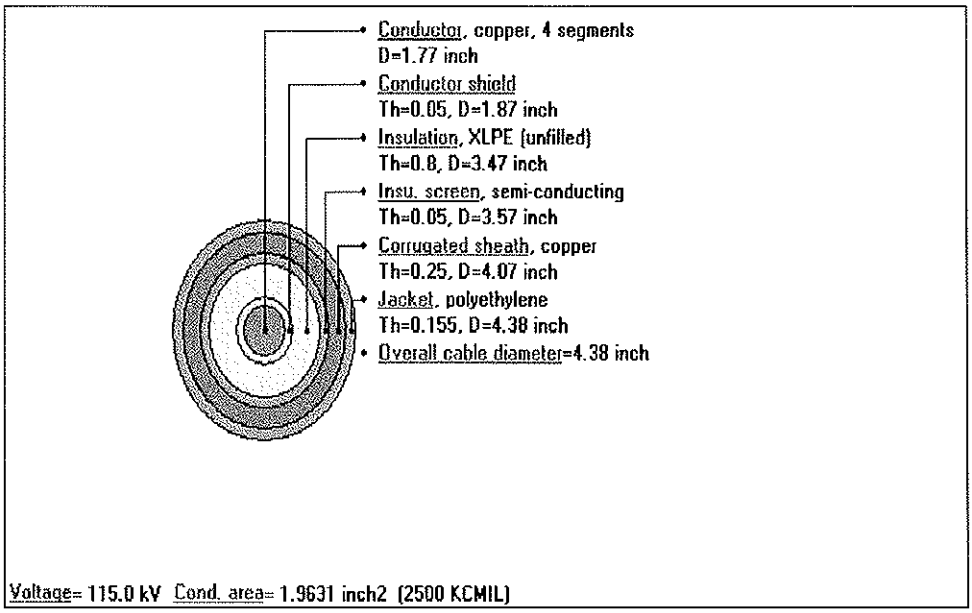

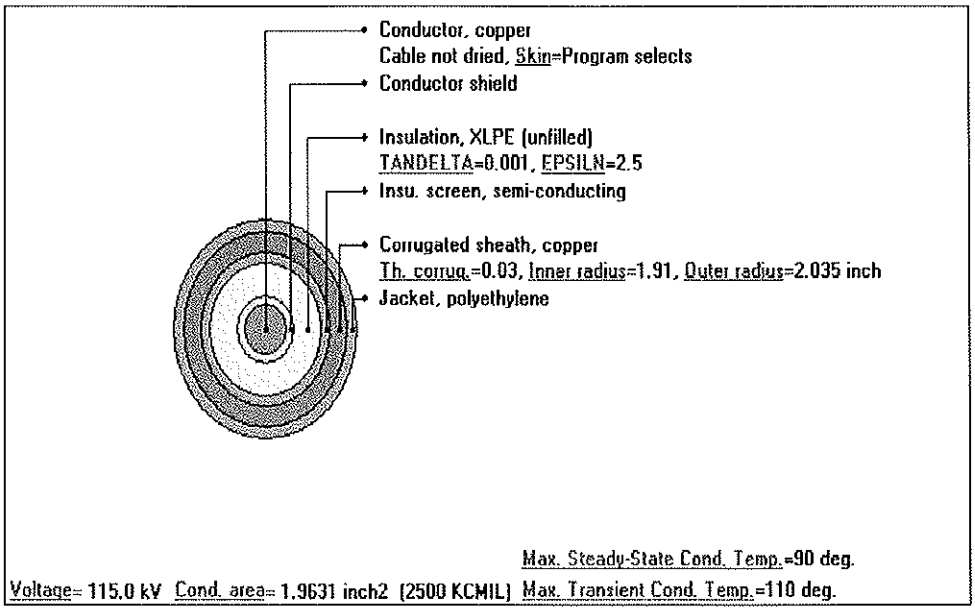

Summary Results

Study: MA-US-1&2 Yesler to Union Sub Ampacity Study, June 2011
Execution: W&U-2B-12"HP w/o-18'd,5'h 2500kcmilCu-2@603A@89.7h
Date: 6/6/2011
Frequency: 60 Hz
Conductor Resistances: IEC-228
Fraction of conductor current returning through sheath for single phase cables: 1

Installation Type: Multiple Duct Banks Backfills

Parameter						Unit	Value
Ambient Soil Temperature at Installation Depth						°C	36.4
Thermal Resistivity of Native Soil						°C.m/W	1
Layers		Dimensions [ft]				Type	Thermal Resistivity [°C.m/W]
No.	Name	X Center	Y Center	Width	Height		
1	DB 4X2	0	20.032	1.854	4.063	Standard ductbank	0.6
2	Backfill	0	8.982	2.001	17.999	Backfill	0.75
3	Backfill	-1.484	20.026	1.073	4.026	Backfill	0.75
4	Backfill	1.484	20.026	1.073	4.026	Backfill	0.75
5	Backfill	-1.516	8.965	1.001	17.999	Backfill	0.75
6	Backfill	1.516	8.965	1.001	17.999	Backfill	0.75
Heat Source Type							Temperature
Heat Source Temperature						°C	185
Heat Source X Center						ft	-6.43
Heat Source Y Center						ft	7
Heat Source Diameter						inch	12
Heat Source Insulation Diameter						inch	26
Heat Source Insulation Thermal Resistivity						°C.m/W	54.692

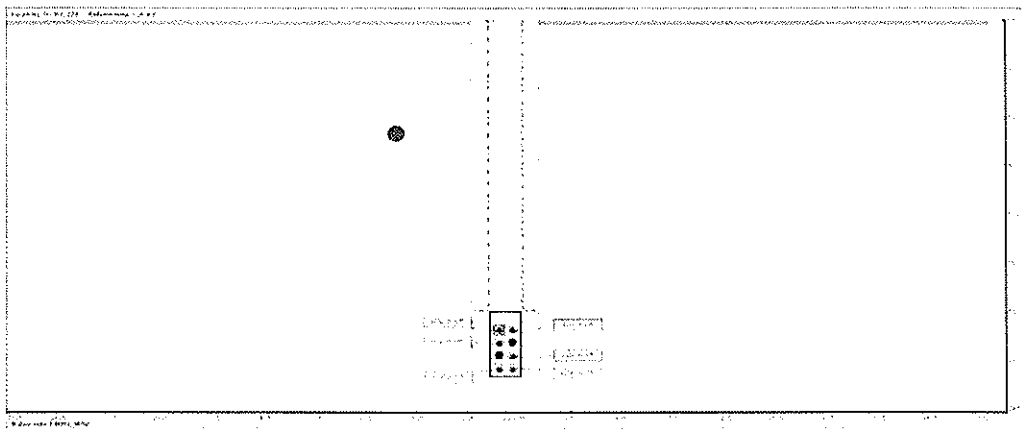

Summary Results

Solution converged

Cable\Cable type no	Circuit	Phase	Location		Load Factor	Temperature	Ampacity
			X[ft]	Y[ft]	[p.u.]	[°C]	[A]
1\1	1	A	0.401	19.159	0.8	88.5	603
2\1	1	B	-0.401	19.159	0.8	89.7	603
3\1	1	C	-0.401	19.961	0.8	89.5	603
4\1	2	A	-0.401	21.565	0.8	87.4	603
5\1	2	B	0.401	21.565	0.8	87.1	603
6\1	2	C	0.401	20.763	0.8	88.1	603

Cables input data

Study: MA-US-1&2 Yesler to Union Sub Ampacity Study, June 2011
Execution: W&U-2B-12"HP w/o-18'd,5'h 2500kcmilCu-2@603A@89.7h
Date: 6/6/2011

No	Description	Unit	1
General cable information			
1	Cable type no		1
2	Number of cores		1
3	Voltage	kV	115
4	Conductor area	$inch^2$	1.9631
5	Maximum Steady-State Conductor Temperature	°C	90
6	Maximum Emergency Conductor Temperature	°C	110
Construction			
Conductor			
7	Material		copper
8	Resistivity @20°C	uΩ.cm	1.7241
9	Temperature coefficient	1/K	0.00393
10	Reciprocal of temperature coefficient of resistance (BETA)	°C	234.5
11	Volumetric specific heat (SH)	$J/K.m^3$	3.45
12	Construction		4 segments
13	Is cable dried?		No
14	ks (Skin effect coefficient)		0.44
15	kp (Proximity effect coefficient)		0.37
16	Diameter	inch	1.77
Conductor shield			
17	Is layer present?		Yes
18	Thickness	inch	0.05
19	Diameter	inch	1.87
Insulation			
20	Is layer present?		Yes
21	Material		XLPE (unfilled)
22	Thermal resistivity	K.m/w	3.5
23	Dielectric loss factor - (tan δ)		0.001
24	Relative permittivity (ε)		2.5
25	Thickness	inch	0.8
26	Diameter	inch	3.47
Insulation screen			
27	Is layer present?		Yes
28	Material		semi-conducting
29	Thickness	inch	0.05
30	Diameter	inch	3.57

Sheath

31	Is layer present?		Yes
32	Is around each core? (Only for Three core cable)		No
33	Material		copper
34	Resistivity @20°C	uΩ.cm	1.7241
35	Temperature coefficient	1/K	0.00393
36	Reciprocal of temperature coefficient of resistance (BETA)	°C	234.5
37	Volumetric specific heat (SH)	$J/K.m^3$	3.45
38	Corrugated construction		Corrugated
39	Thickness of the corrugated sheath	inch	0.03
40	Inner radius of the corrugated sheath	inch	1.91
41	Outer radius of the corrugated sheath	inch	2.035
42	Thickness	inch	0.25
43	Diameter	inch	4.07

Jacket

44	Is layer present?		Yes
45	Material		polyethylene
46	Thermal resistivity	K.m/w	3.5
47	Thickness	inch	0.155
48	Diameter	inch	4.38

Overall cable diameter

49	Diameter	inch	4.38

No	Description/Value	Unit	1
SPECIFIC INSTALLATION DATA			
Bonding			
1	1-CON, sheaths single point bonded, triang. configuration		Yes
Loss factor constant			
2	Loss factor constant		0.3
Duct construction			
3	PVC duct in concrete or buried		Yes
4	Resistivity (RH)		6
Cables touching			
5	Single conductor cables NOT touching		Yes

No	Symbol	Description	Unit	1	2	3	4	5	6
Temperature calculations									
1		Cable type no		1	1	1	1	1	1
2		Circuit no		1	1	1	2	2	2
3		Phase		A	B	C	A	B	C
4	θ_c	Conductor temperature	°C	88.5	89.7	89.5	87.4	87.1	88.1
5	θ_i	Sheath/Shield temperature	°C	85.3	86.5	86.3	84.2	83.9	84.9
6	θ_j	Armour/Pipe or Jacket temperature	°C	84.9	86.1	85.8	83.8	83.4	84.5
7	θ_s	Exterior duct temperature	°C	4	4	4	4.2	4.2	4.1
8	θ_a	Ambient temperature	°C	36.4	36.4	36.4	36.4	36.4	36.4

Cable type no: 1
Cable type: EXTRUDED
Cable ID: 115C2.5MX5
Cable title: 115KV 2500 KCMIL CU XLPE 800mil Southwire

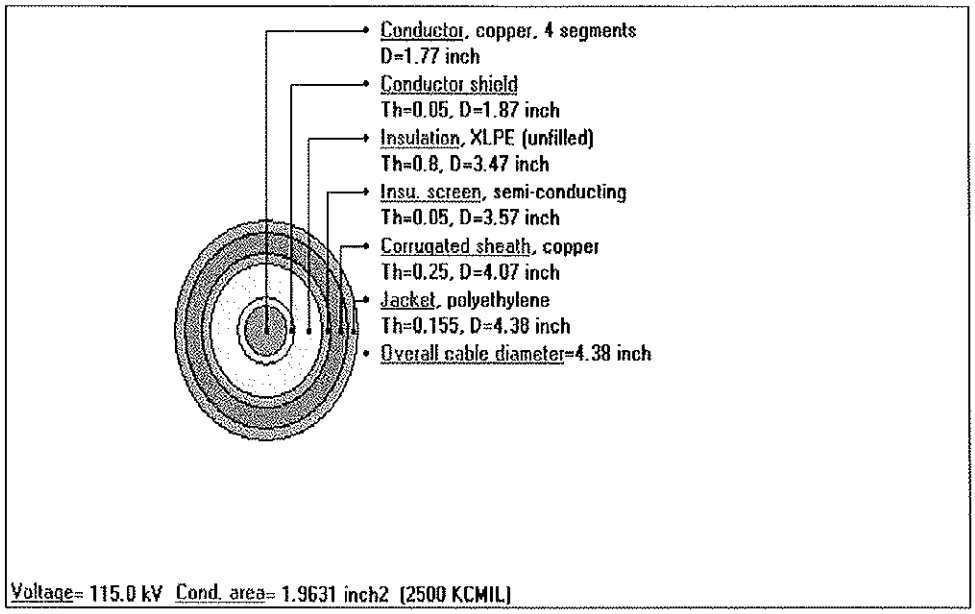

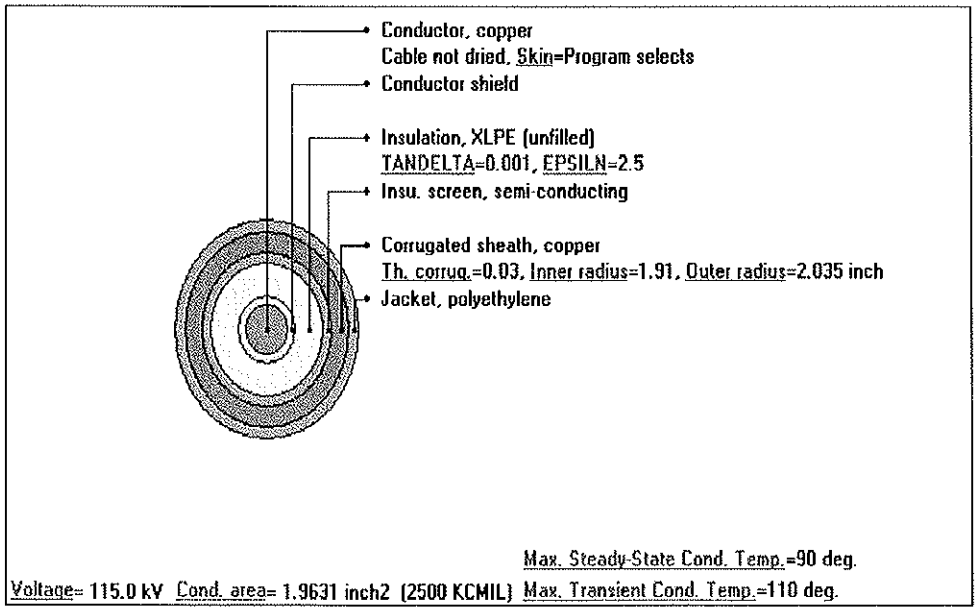

Summary Results

Study: MA-US-1&2 Yesler to Union Sub Ampacity Study, June 2011
Execution: W&U-2C-12"HP w insl-21'd,0'h 2500kcmilCu-2@603A@67.4h
Date: 6/10/2011
Frequency: 60 Hz
Conductor Resistances: IEC-228
Fraction of conductor current returning through sheath for single phase cables: 1

Installation Type: Multiple Duct Banks Backfills

Parameter						Unit	Value
Ambient Soil Temperature at Installation Depth						°C	36.4
Thermal Resistivity of Native Soil						°C.m/W	1
Layers		Dimensions [ft]				Type	Thermal Resistivity [°C.m/W]
No.	Name	X Center	Y Center	Width	Height		
1	DB 4X2	0	20.032	1.854	4.063	Standard ductbank	0.6
2	Backfill	0	8.982	2.001	17.999	Backfill	0.75
3	Backfill	-1.172	14.013	0.331	16.024	Backfill	8.333
4	Backfill	1.172	14.013	0.331	16.024	Backfill	8.333
Heat Source Type							Temperature
Heat Source Temperature						°C	185
Heat Source X Center						ft	0
Heat Source Y Center						ft	7
Heat Source Diameter						inch	12
Heat Source Insulation Diameter						inch	24
Heat Source Insulation Thermal Resistivity						°C.m/W	78.084

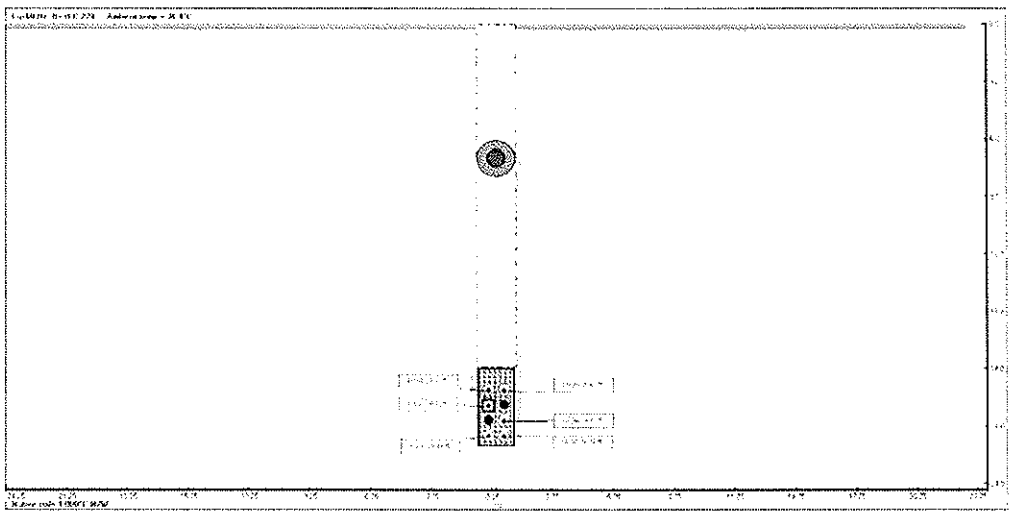

Summary Results

Solution converged

Cable\Cable type no	Circuit	Phase	Location		Load Factor	Temperature	Ampacity
			X[ft]	Y[ft]	[p.u.]	[°C]	[A]
1 \ 1	1	A	0.401	19.159	0.8	66.5	603
2 \ 1	1	B	-0.401	19.159	0.8	66.9	603
3 \ 1	1	C	-0.401	19.961	0.8	67.4	603
4 \ 1	2	A	-0.401	21.565	0.8	65.5	603
5 \ 1	2	B	0.401	21.565	0.8	65.8	603
6 \ 1	2	C	0.401	20.763	0.8	67.2	603

Cables input data

Study: MA-US-1&2 Yesler to Union Sub Ampacity Study, June 2011
Execution: W&U-2C-12"HP w insl-21'd,0'h 2500kcmilCu-2@603A@67.4h
Date: 6/10/2011

No	Description	Unit	1
General cable information			
1	Cable type no		1
2	Number of cores		1
3	Voltage	kV	115
4	Conductor area	$inch^2$	1.9631
5	Maximum Steady-State Conductor Temperature	°C	90
6	Maximum Emergency Conductor Temperature	°C	110
Construction			
Conductor			
7	Material		copper
8	Resistivity @20°C	uΩ.cm	1.7241
9	Temperature coefficient	1/K	0.00393
10	Reciprocal of temperature coefficient of resistance (BETA)	°C	234.5
11	Volumetric specific heat (SH)	$J/K.m^3$	3.45
12	Construction		4 segments
13	Is cable dried?		No
14	ks (Skin effect coefficient)		0.44
15	kp (Proximity effect coefficient)		0.37
16	Diameter	inch	1.77
Conductor shield			
17	Is layer present?		Yes
18	Thickness	inch	0.05
19	Diameter	inch	1.87
Insulation			
20	Is layer present?		Yes
21	Material		XLPE (unfilled)
22	Thermal resistivity	K.m/w	3.5
23	Dielectric loss factor - (tan δ)		0.001
24	Relative permittivity (ε)		2.5
25	Thickness	inch	0.8
26	Diameter	inch	3.47
Insulation screen			
27	Is layer present?		Yes
28	Material		semi-conducting
29	Thickness	inch	0.05
30	Diameter	inch	3.57

Sheath

31	Is layer present?		Yes
32	Is around each core? (Only for Three core cable)		No
33	Material		copper
34	Resistivity @20°C	uΩ.cm	1.7241
35	Temperature coefficient	1/K	0.00393
36	Reciprocal of temperature coefficient of resistance (BETA)	°C	234.5
37	Volumetric specific heat (SH)	$J/K.m^3$	3.45
38	Corrugated construction		Corrugated
39	Thickness of the corrugated sheath	inch	0.03
40	Inner radius of the corrugated sheath	inch	1.91
41	Outer radius of the corrugated sheath	inch	2.035
42	Thickness	inch	0.25
43	Diameter	inch	4.07

Jacket

44	Is layer present?		Yes
45	Material		polyethylene
46	Thermal resistivity	K.m/w	3.5
47	Thickness	inch	0.155
48	Diameter	inch	4.38

Overall cable diameter

49	Diameter	inch	4.38

No	Description/Value	Unit	1
SPECIFIC INSTALLATION DATA			
Bonding			
1	1-CON, sheaths single point bonded, triang. configuration		Yes
Loss factor constant			
2	Loss factor constant		0.3
Duct construction			
3	PVC duct in concrete or buried		Yes
4	Resistivity (RH)		6
Cables touching			
5	Single conductor cables NOT touching		Yes

No	Symbol	Description	Unit	1	2	3	4	5	6
Temperature calculations									
1		Cable type no		1	1	1	1	1	1
2		Circuit no		1	1	1	2	2	2
3		Phase		A	B	C	A	B	C
4	θ_c	Conductor temperature	°C	66.5	66.9	67.4	65.5	65.8	67.2
5	θ_i	Sheath/Shield temperature	°C	63.4	63.8	64.4	62.5	62.8	64.2
6	θ_j	Armour/Pipe or Jacket temperature	°C	63	63.4	63.9	62.1	62.4	63.8
7	θ_s	Exterior duct temperature	°C	4.7	4.7	4.7	4.6	4.6	4.8
8	θ_a	Ambient temperature	°C	36.4	36.4	36.4	36.4	36.4	36.4

Cable type no: 1
Cable type: EXTRUDED
Cable ID: 115C2.5MX5
Cable title: 115KV 2500 KCMIL CU XLPE 800mil Southwire

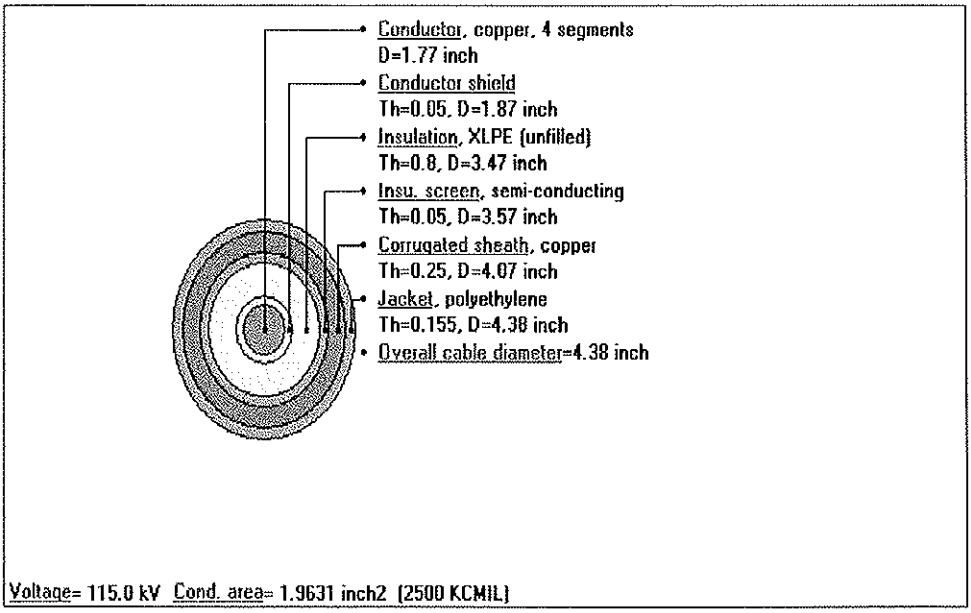

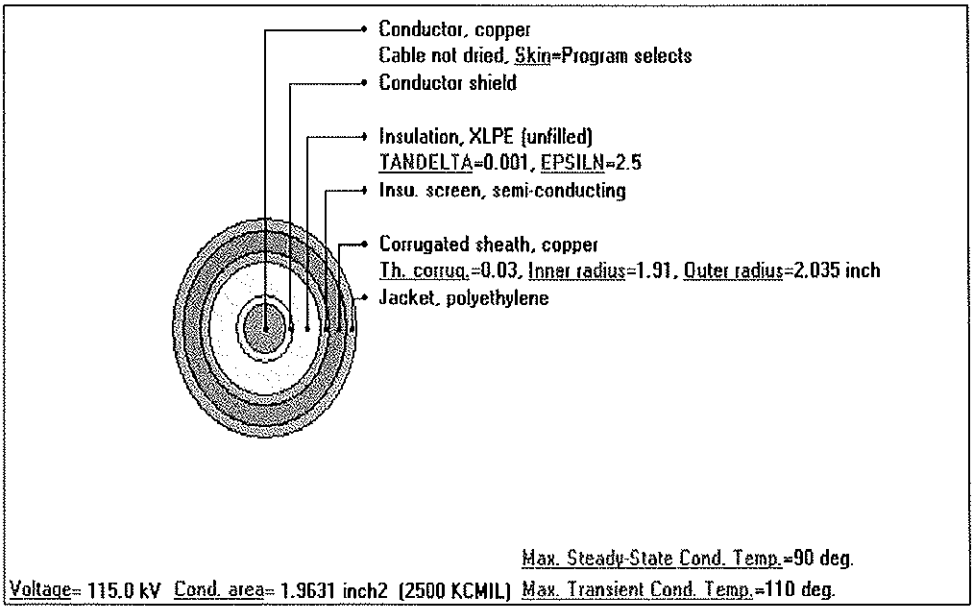

Summary Results

Study: MA-US-1&2 Yesler to Union Sub Ampacity Study, June 2011
Execution: W&U-2D-12"HP w/o-18'd,7'h 2500kcmilCu-2@603A@89.0h
Date: 6/10/2011
Frequency: 60 Hz
Conductor Resistances: IEC-228
Fraction of conductor current returning through sheath for single phase cables: 1

Installation Type: Multiple Duct Banks Backfills

Parameter						Unit	Value
Ambient Soil Temperature at Installation Depth						°C	36.4
Thermal Resistivity of Native Soil						°C.m/W	1
Layers		Dimensions [ft]				Type	Thermal Resistivity [°C.m/W]
No.	Name	X Center	Y Center	Width	Height		
1	DB 4X2	0	20.032	1.854	4.063	Standard ductbank	0.6
2	Backfill	0	8.982	2.001	17.999	Backfill	0.75
3	Backfill	-1.484	20.026	1.073	4.026	Backfill	0.75
4	Backfill	1.484	20.026	1.073	4.026	Backfill	0.75
5	Backfill	-1.516	8.965	1.001	17.999	Backfill	0.75
6	Backfill	1.516	8.965	1.001	17.999	Backfill	0.75
7	Backfill	-2.17	14	0.328	16.001	Backfill	8.33
8	Backfill	2.172	14	0.331	16.001	Backfill	8.33
Heat Source Type							Temperature
Heat Source Temperature						°C	185
Heat Source X Center						ft	-8.43
Heat Source Y Center						ft	7
Heat Source Diameter						inch	12
Heat Source Insulation Diameter						inch	26
Heat Source Insulation Thermal Resistivity						°C.m/W	54.692

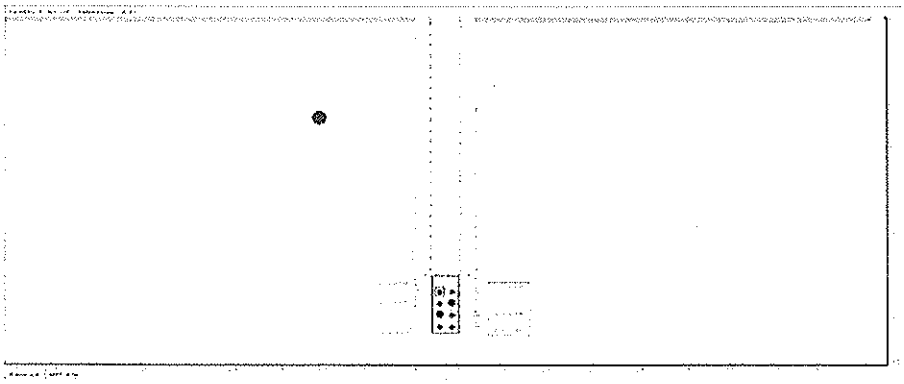

Summary Results

Solution converged

Cable\Cable type no	Circuit	Phase	Location		Load Factor	Temperature	Ampacity
			X[ft]	Y[ft]	[p.u.]	[°C]	[A]
1\1	1	A	0.401	19.159	0.8	87.7	603
2\1	1	B	-0.401	19.159	0.8	89	603
3\1	1	C	-0.401	19.961	0.8	88.9	603
4\1	2	A	-0.401	21.565	0.8	86.7	603
5\1	2	B	0.401	21.565	0.8	86.2	603
6\1	2	C	0.401	20.763	0.8	87.5	603

Cables input data

Study: MA-US-1&2 Yesler to Union Sub Ampacity Study, June 2011
Execution: W&U-2D-12"HP w/o-18'd,7'h 2500kcmilCu-2@603A@89.0h
Date: 6/10/2011

No	Description	Unit	1
General cable information			
1	Cable type no		1
2	Number of cores		1
3	Voltage	kV	115
4	Conductor area	$inch^2$	1.9631
5	Maximum Steady-State Conductor Temperature	°C	90
6	Maximum Emergency Conductor Temperature	°C	110
Construction			
Conductor			
7	Material		copper
8	Resistivity @20°C	uΩ.cm	1.7241
9	Temperature coefficient	1/K	0.00393
10	Reciprocal of temperature coefficient of resistance (BETA)	°C	234.5
11	Volumetric specific heat (SH)	$J/K.m^3$	3.45
12	Construction		4 segments
13	Is cable dried?		No
14	ks (Skin effect coefficient)		0.44
15	kp (Proximity effect coefficient)		0.37
16	Diameter	inch	1.77
Conductor shield			
17	Is layer present?		Yes
18	Thickness	inch	0.05
19	Diameter	inch	1.87
Insulation			
20	Is layer present?		Yes
21	Material		XLPE (unfilled)
22	Thermal resistivity	K.m/w	3.5
23	Dielectric loss factor - (tan δ)		0.001
24	Relative permittivity (ε)		2.5
25	Thickness	inch	0.8
26	Diameter	inch	3.47
Insulation screen			
27	Is layer present?		Yes
28	Material		semi-conducting
29	Thickness	inch	0.05
30	Diameter	inch	3.57

Sheath

31	Is layer present?		Yes
32	Is around each core? (Only for Three core cable)		No
33	Material		copper
34	Resistivity @20°C	uΩ.cm	1.7241
35	Temperature coefficient	1/K	0.00393
36	Reciprocal of temperature coefficient of resistance (BETA)	°C	234.5
37	Volumetric specific heat (SH)	$J/K.m^3$	3.45
38	Corrugated construction		Corrugated
39	Thickness of the corrugated sheath	inch	0.03
40	Inner radius of the corrugated sheath	inch	1.91
41	Outer radius of the corrugated sheath	inch	2.035
42	Thickness	inch	0.25
43	Diameter	inch	4.07

Jacket

44	Is layer present?		Yes
45	Material		polyethylene
46	Thermal resistivity	K.m/w	3.5
47	Thickness	inch	0.155
48	Diameter	inch	4.38

Overall cable diameter

49	Diameter	inch	4.38

No	Description/Value	Unit	1
SPECIFIC INSTALLATION DATA			
Bonding			
1	1-CON, sheaths single point bonded, triang. configuration		Yes
Loss factor constant			
2	Loss factor constant		0.3
Duct construction			
3	PVC duct in concrete or buried		Yes
4	Resistivity (RH)		6
Cables touching			
5	Single conductor cables NOT touching		Yes

No	Symbol	Description	Unit	1	2	3	4	5	6
Temperature calculations									
1		Cable type no		1	1	1	1	1	1
2		Circuit no		1	1	1	2	2	2
3		Phase		A	B	C	A	B	C
4	θ_c	Conductor temperature	°C	87.7	89	88.9	86.7	86.2	87.5
5	θ_i	Sheath/Shield temperature	°C	84.5	85.8	85.7	83.5	83	84.3
6	θ_j	Armour/Pipe or Jacket temperature	°C	84	85.3	85.3	83	82.6	83.8
7	θ_s	Exterior duct temperature	°C	4.3	4.4	4.4	4.4	4.5	4.4
8	θ_a	Ambient temperature	°C	36.4	36.4	36.4	36.4	36.4	36.4

Cable type no: 1
Cable type: EXTRUDED
Cable ID: 115C2.5MX5
Cable title: 115KV 2500 KCMIL CU XLPE 800mil Southwire

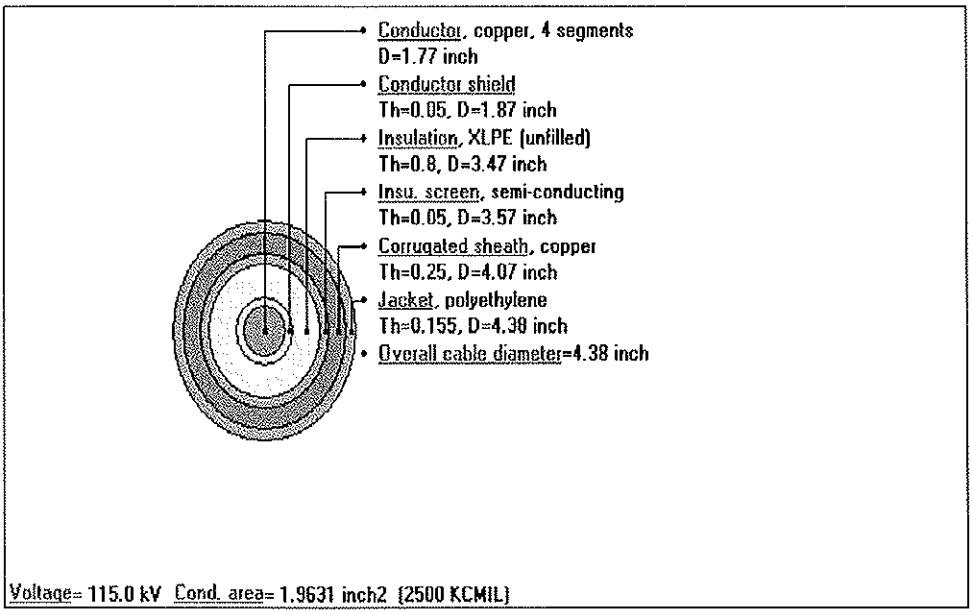

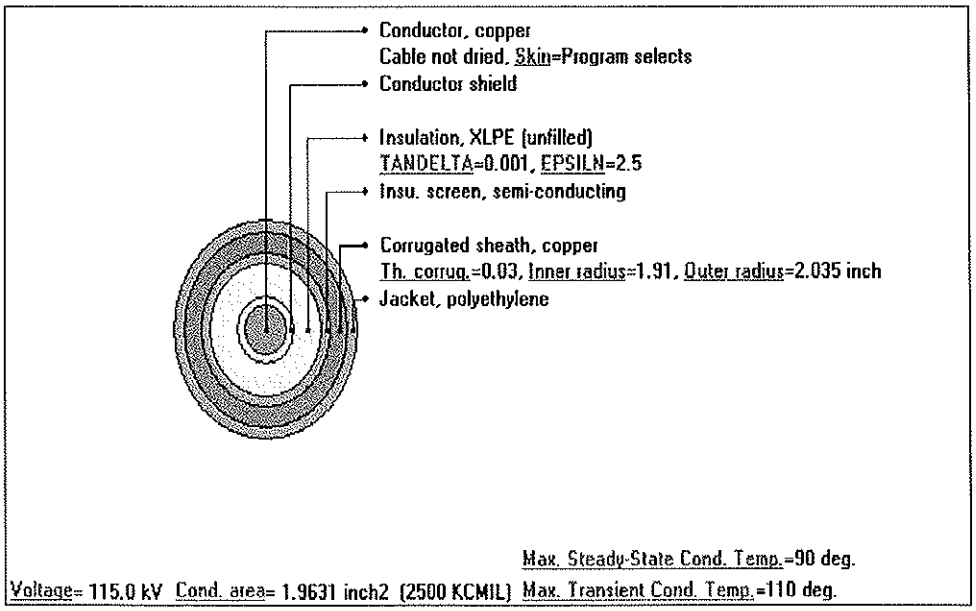

Summary Results

Study: MA-US-1&2 Yesler to Union Sub Ampacity Study, June 2011
Execution: W&U-3A-14"HPwith insl-18'd,0'h 2500kcmilCu-2@603A@63.2h
Date: 6/6/2011
Frequency: 60 Hz
Conductor Resistances: IEC-228
Fraction of conductor current returning through sheath for single phase cables: 1

Installation Type: Multiple Duct Banks Backfills

Parameter						Unit	Value
Ambient Soil Temperature at Installation Depth						°C	36.4
Thermal Resistivity of Native Soil						°C.m/W	1
Layers		Dimensions [ft]				Type	Thermal Resistivity [°C.m/W]
No.	Name	X Center	Y Center	Width	Height		
1	DB 4X2	0	20.032	1.854	4.063	Standard ductbank	0.6
2	Backfill	0	8.982	2.001	17.999	Backfill	0.75
Heat Source Type							Temperature
Heat Source Temperature						°C	185
Heat Source X Center						ft	0
Heat Source Y Center						ft	6
Heat Source Diameter						inch	14
Heat Source Insulation Diameter						inch	26
Heat Source Insulation Thermal Resistivity						°C.m/W	78.084

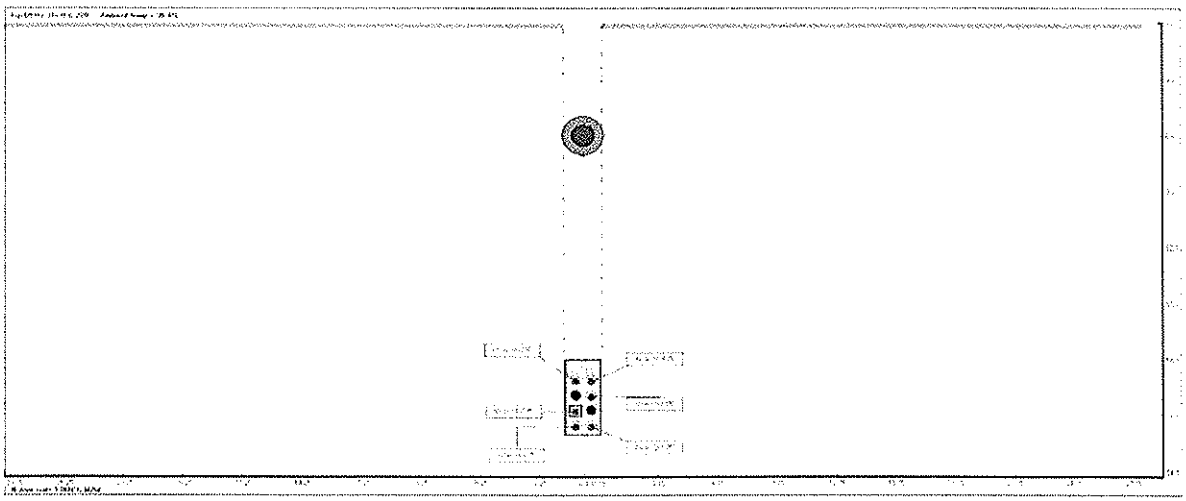

Summary Results

Solution converged

Cable\Cable type no	Circuit	Phase	Location		Load Factor	Temperature	Ampacity
			X[ft]	Y[ft]	[p.u.]	[°C]	[A]
1 \ 1	1	A	0.401	19.159	0.8	62.6	603
2 \ 1	1	B	-0.401	19.159	0.8	62.3	603
3 \ 1	1	C	-0.401	20.763	0.8	63.2	603
4 \ 1	2	A	0.401	19.961	0.8	63.1	603
5 \ 1	2	B	0.401	21.565	0.8	62.5	603
6 \ 1	2	C	-0.401	21.565	0.8	62.7	603

Cables input data

Study: MA-US-1&2 Yesler to Union Sub Ampacity Study, June 2011
Execution: W&U-3A-14"HPwith insl-18'd,0'h 2500kcmilCu-2@603A@63.2h
Date: 6/6/2011

No	Description	Unit	1
General cable information			
1	Cable type no		1
2	Number of cores		1
3	Voltage	kV	115
4	Conductor area	$inch^2$	1.9631
5	Maximum Steady-State Conductor Temperature	°C	90
6	Maximum Emergency Conductor Temperature	°C	110
Construction			
Conductor			
7	Material		copper
8	Resistivity @20°C	uΩ.cm	1.7241
9	Temperature coefficient	1/K	0.00393
10	Reciprocal of temperature coefficient of resistance (BETA)	°C	234.5
11	Volumetric specific heat (SH)	$J/K.m^3$	3.45
12	Construction		4 segments
13	Is cable dried?		No
14	ks (Skin effect coefficient)		0.44
15	kp (Proximity effect coefficient)		0.37
16	Diameter	inch	1.77
Conductor shield			
17	Is layer present?		Yes
18	Thickness	inch	0.05
19	Diameter	inch	1.87
Insulation			
20	Is layer present?		Yes
21	Material		XLPE (unfilled)
22	Thermal resistivity	K.m/w	3.5
23	Dielectric loss factor - (tan δ)		0.001
24	Relative permittivity (ε)		2.5
25	Thickness	inch	0.8
26	Diameter	inch	3.47
Insulation screen			
27	Is layer present?		Yes
28	Material		semi-conducting
29	Thickness	inch	0.05
30	Diameter	inch	3.57

Sheath

31	Is layer present?		Yes
32	Is around each core? (Only for Three core cable)		No
33	Material		copper
34	Resistivity @20°C	uΩ.cm	1.7241
35	Temperature coefficient	1/K	0.00393
36	Reciprocal of temperature coefficient of resistance (BETA)	°C	234.5
37	Volumetric specific heat (SH)	$J/K.m^3$	3.45
38	Corrugated construction		Corrugated
39	Thickness of the corrugated sheath	inch	0.03
40	Inner radius of the corrugated sheath	inch	1.91
41	Outer radius of the corrugated sheath	inch	2.035
42	Thickness	inch	0.25
43	Diameter	inch	4.07

Jacket

44	Is layer present?		Yes
45	Material		polyethylene
46	Thermal resistivity	K.m/w	3.5
47	Thickness	inch	0.155
48	Diameter	inch	4.38

Overall cable diameter

49	Diameter	inch	4.38

No	Description/Value	Unit	1
SPECIFIC INSTALLATION DATA			
Bonding			
1	1-CON, sheaths single point bonded, triang. configuration		Yes
Loss factor constant			
2	Loss factor constant		0.3
Duct construction			
3	PVC duct in concrete or buried		Yes
4	Resistivity (RH)		6
Cables touching			
5	Single conductor cables NOT touching		Yes

No	Symbol	Description	Unit	1	2	3	4	5	6
Temperature calculations									
1		Cable type no		1	1	1	1	1	1
2		Circuit no		1	1	1	2	2	2
3		Phase		A	B	C	A	B	C
4	θ_c	Conductor temperature	°C	62.6	62.3	63.2	63.1	62.5	62.7
5	θ_i	Sheath/Shield temperature	°C	59.6	59.3	60.2	60.1	59.5	59.7
6	θ_j	Armour/Pipe or Jacket temperature	°C	59.2	58.9	59.8	59.7	59.1	59.4
7	θ_s	Exterior duct temperature	°C	3.8	3.8	3.9	3.8	4	4
8	θ_a	Ambient temperature	°C	36.4	36.4	36.4	36.4	36.4	36.4

Cable type no: 1
Cable type: EXTRUDED
Cable ID: 115C2.5MX5
Cable title: 115KV 2500 KCMIL CU XLPE 800mil Southwire

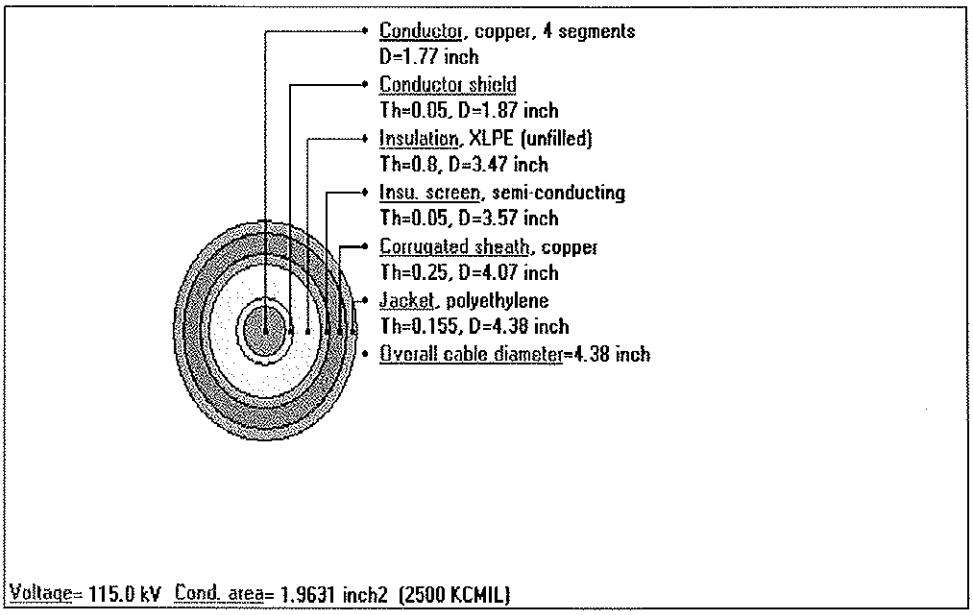

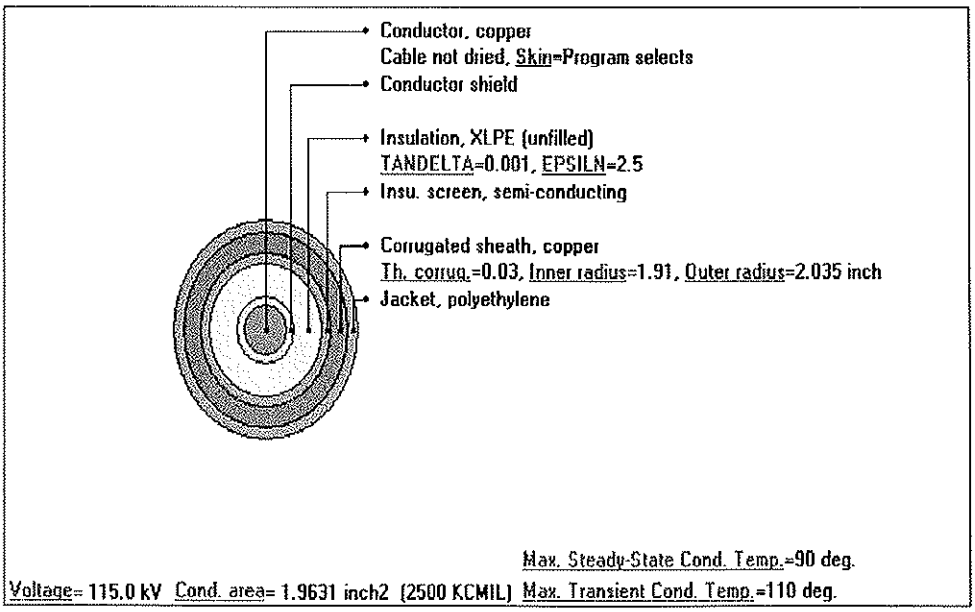

Summary Results

Study: MA-US-1&2 Yesler to Union Sub Ampacity Study, June 2011
Execution: W&U-3B-14"HP w/o-18'd,0'h 2500kcmilCu-2@603A@87.5h
Date: 6/6/2011
Frequency: 60 Hz
Conductor Resistances: IEC-228
Fraction of conductor current returning through sheath for single phase cables: 1

Installation Type: Multiple Duct Banks Backfills

Parameter						Unit	Value
Ambient Soil Temperature at Installation Depth						°C	36.4
Thermal Resistivity of Native Soil						°C.m/W	1
Layers		Dimensions [ft]				Type	Thermal Resistivity [°C.m/W]
No.	Name	X Center	Y Center	Width	Height		
1	DB 4X2	0	20.032	1.854	4.063	Standard ductbank	0.6
2	Backfill	0	8.982	2.001	17.999	Backfill	0.75
Heat Source Type							Temperature
Heat Source Temperature						°C	185
Heat Source X Center						ft	-6.43
Heat Source Y Center						ft	6
Heat Source Diameter						inch	14
Heat Source Insulation Diameter						inch	26
Heat Source Insulation Thermal Resistivity						°C.m/W	78.084

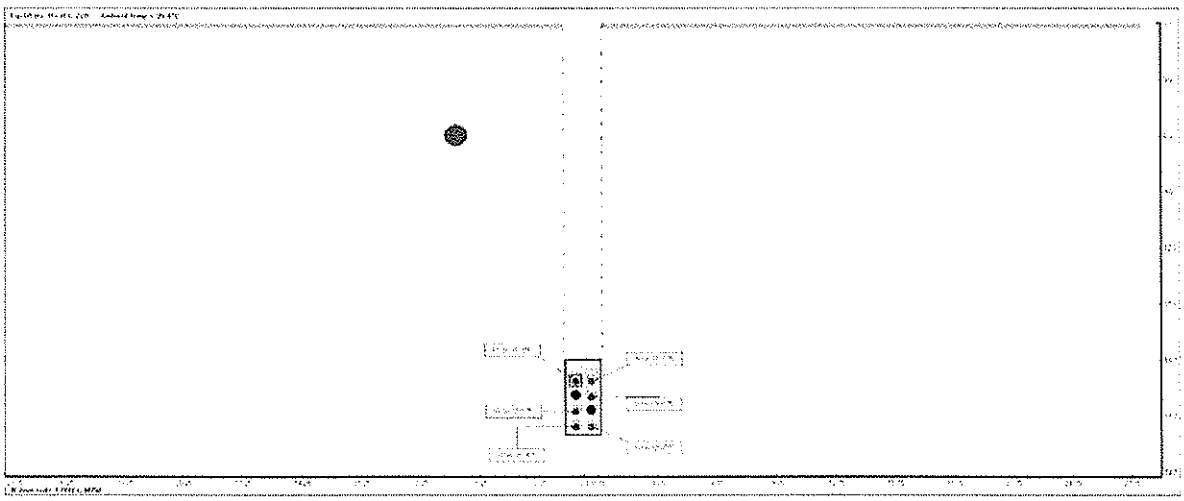

Summary Results

Solution converged

Cable\Cable type no	Circuit	Phase	Location		Load Factor	Temperature	Ampacity
			X[ft]	Y[ft]	[p.u.]	[°C]	[A]
1\1	1	A	0.401	19.159	0.8	87	603
2\1	1	B	-0.401	19.159	0.8	87.5	603
3\1	1	C	-0.401	20.763	0.8	87	603
4\1	2	A	0.401	19.961	0.8	86.9	603
5\1	2	B	0.401	21.565	0.8	84.9	603
6\1	2	C	-0.401	21.565	0.8	85.7	603

Cables input data

Study: MA-US-1&2 Yesler to Union Sub Ampacity Study, June 2011
Execution: W&U-3B-14"HP w/o-18'd,0'h 2500kcmilCu-2@603A@87.5h
Date: 6/6/2011

No	Description	Unit	1
General cable information			
1	Cable type no		1
2	Number of cores		1
3	Voltage	kV	115
4	Conductor area	$inch^2$	1.9631
5	Maximum Steady-State Conductor Temperature	°C	90
6	Maximum Emergency Conductor Temperature	°C	110
Construction			
Conductor			
7	Material		copper
8	Resistivity @20°C	uΩ.cm	1.7241
9	Temperature coefficient	1/K	0.00393
10	Reciprocal of temperature coefficient of resistance (BETA)	°C	234.5
11	Volumetric specific heat (SH)	$J/K.m^3$	3.45
12	Construction		4 segments
13	Is cable dried?		No
14	ks (Skin effect coefficient)		0.44
15	kp (Proximity effect coefficient)		0.37
16	Diameter	inch	1.77
Conductor shield			
17	Is layer present?		Yes
18	Thickness	inch	0.05
19	Diameter	inch	1.87
Insulation			
20	Is layer present?		Yes
21	Material		XLPE (unfilled)
22	Thermal resistivity	K.m/w	3.5
23	Dielectric loss factor - (tan δ)		0.001
24	Relative permittivity (ε)		2.5
25	Thickness	inch	0.8
26	Diameter	inch	3.47
Insulation screen			
27	Is layer present?		Yes
28	Material		semi-conducting
29	Thickness	inch	0.05
30	Diameter	inch	3.57

Sheath

31	Is layer present?		Yes
32	Is around each core? (Only for Three core cable)		No
33	Material		copper
34	Resistivity @20°C	uΩ.cm	1.7241
35	Temperature coefficient	1/K	0.00393
36	Reciprocal of temperature coefficient of resistance (BETA)	°C	234.5
37	Volumetric specific heat (SH)	$J/K.m^3$	3.45
38	Corrugated construction		Corrugated
39	Thickness of the corrugated sheath	inch	0.03
40	Inner radius of the corrugated sheath	inch	1.91
41	Outer radius of the corrugated sheath	inch	2.035
42	Thickness	inch	0.25
43	Diameter	inch	4.07

Jacket

44	Is layer present?		Yes
45	Material		polyethylene
46	Thermal resistivity	K.m/w	3.5
47	Thickness	inch	0.155
48	Diameter	inch	4.38

Overall cable diameter

49	Diameter	inch	4.38

No	Description/Value	Unit	1
SPECIFIC INSTALLATION DATA			
Bonding			
1	1-CON, sheaths single point bonded, triang. configuration		Yes
Loss factor constant			
2	Loss factor constant		0.3
Duct construction			
3	PVC duct in concrete or buried		Yes
4	Resistivity (RH)		6
Cables touching			
5	Single conductor cables NOT touching		Yes

No	Symbol	Description	Unit	1	2	3	4	5	6
Temperature calculations									
1		Cable type no		1	1	1	1	1	1
2		Circuit no		1	1	1	2	2	2
3		Phase		A	B	C	A	B	C
4	θ_c	Conductor temperature	°C	87	87.5	87	86.9	84.9	85.7
5	θ_i	Sheath/Shield temperature	°C	83.8	84.3	83.8	83.7	81.7	82.6
6	θ_j	Armour/Pipe or Jacket temperature	°C	83.4	83.9	83.4	83.3	81.3	82.2
7	θ_s	Exterior duct temperature	°C	4	4	4.1	4.1	4.2	4.2
8	θ_a	Ambient temperature	°C	36.4	36.4	36.4	36.4	36.4	36.4

Cable type no: 1
Cable type: EXTRUDED
Cable ID: 115C2.5MX5
Cable title: 115KV 2500 KCMIL CU XLPE 800mil Southwire

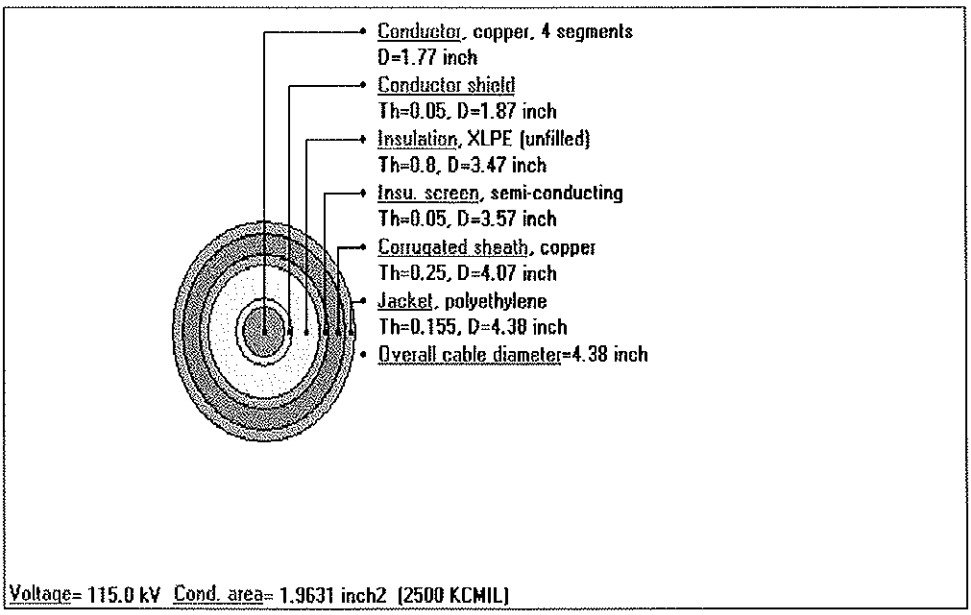

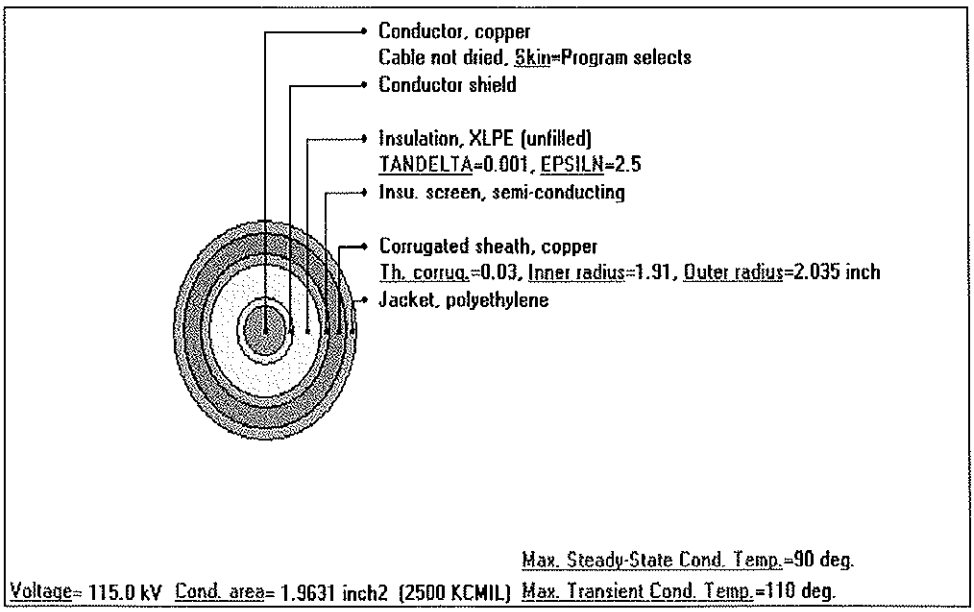

Summary Results

Study: MA-US-1&2 Yesler to Union Sub Ampacity Study, June 2011
Execution: W&U-3C-14"HPwith insl-18'd,0'h 2500kcmilCu-2@603A@66.2h
Date: 6/10/2011
Frequency: 60 Hz
Conductor Resistances: IEC-228
Fraction of conductor current returning through sheath for single phase cables: 1

Installation Type: Multiple Duct Banks Backfills

Parameter						Unit	Value
Ambient Soil Temperature at Installation Depth						°C	36.4
Thermal Resistivity of Native Soil						°C.m/W	1
Layers		Dimensions [ft]				Type	Thermal Resistivity [°C.m/W]
No.	Name	X Center	Y Center	Width	Height		
1	DB 4X2	0	20.032	1.854	4.063	Standard ductbank	0.6
2	Backfill	0	8.982	2.001	17.999	Backfill	0.75
3	Backfill	-1.172	14.013	0.331	16.024	Backfill	8.333
4	Backfill	1.172	14.013	0.331	16.024	Backfill	8.333
Heat Source Type							Temperature
Heat Source Temperature						°C	185
Heat Source X Center						ft	0
Heat Source Y Center						ft	6
Heat Source Diameter						inch	14
Heat Source Insulation Diameter						inch	26
Heat Source Insulation Thermal Resistivity						°C.m/W	78.084

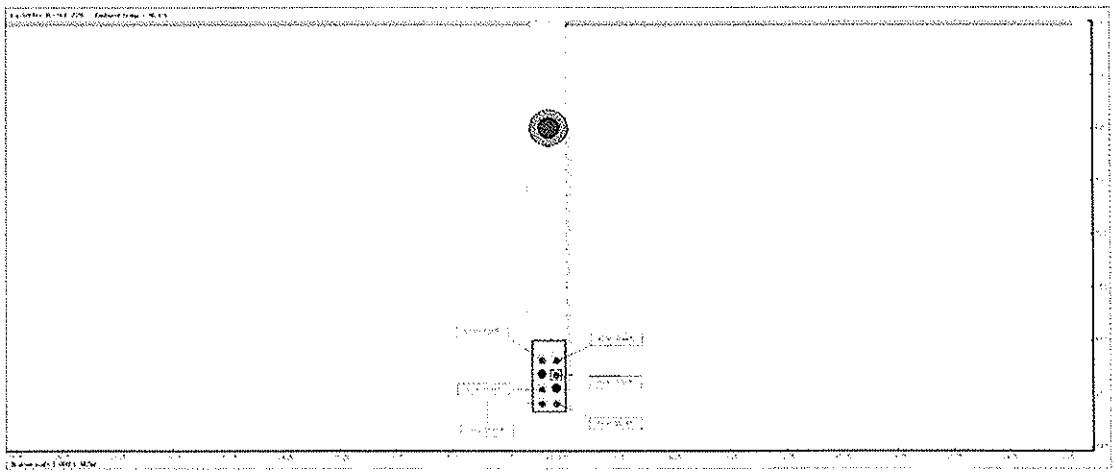

Summary Results

Solution converged

Cable\Cable type no	Circuit	Phase	Location		Load Factor	Temperature	Ampacity
			X[ft]	Y[ft]	[p.u.]	[°C]	[A]
1\1	1	A	0.401	19.159	0.8	65.7	603
2\1	1	B	-0.401	19.159	0.8	65.3	603
3\1	1	C	-0.401	20.763	0.8	66.1	603
4\1	2	A	0.401	19.961	0.8	66.2	603
5\1	2	B	0.401	21.565	0.8	64.4	603
6\1	2	C	-0.401	21.565	0.8	64.7	603

Cables input data

Study: MA-US-1&2 Yesler to Union Sub Ampacity Study, June 2011
Execution: W&U-3C-14"HPwith insl-18'd,0'h 2500kcmilCu-2@603A@66.2h
Date: 6/10/2011

No	Description	Unit	1
General cable information			
1	Cable type no		1
2	Number of cores		1
3	Voltage	kV	115
4	Conductor area	$inch^2$	1.9631
5	Maximum Steady-State Conductor Temperature	°C	90
6	Maximum Emergency Conductor Temperature	°C	110
Construction			
Conductor			
7	Material		copper
8	Resistivity @20°C	uΩ.cm	1.7241
9	Temperature coefficient	1/K	0.00393
10	Reciprocal of temperature coefficient of resistance (BETA)	°C	234.5
11	Volumetric specific heat (SH)	$J/K.m^3$	3.45
12	Construction		4 segments
13	Is cable dried?		No
14	ks (Skin effect coefficient)		0.44
15	kp (Proximity effect coefficient)		0.37
16	Diameter	inch	1.77
Conductor shield			
17	Is layer present?		Yes
18	Thickness	inch	0.05
19	Diameter	inch	1.87
Insulation			
20	Is layer present?		Yes
21	Material		XLPE (unfilled)
22	Thermal resistivity	K.m/w	3.5
23	Dielectric loss factor - (tan δ)		0.001
24	Relative permittivity (ε)		2.5
25	Thickness	inch	0.8
26	Diameter	inch	3.47
Insulation screen			
27	Is layer present?		Yes
28	Material		semi-conducting
29	Thickness	inch	0.05
30	Diameter	inch	3.57

Sheath

31	Is layer present?		Yes
32	Is around each core? (Only for Three core cable)		No
33	Material		copper
34	Resistivity @20°C	uΩ.cm	1.7241
35	Temperature coefficient	1/K	0.00393
36	Reciprocal of temperature coefficient of resistance (BETA)	°C	234.5
37	Volumetric specific heat (SH)	$J/K.m^3$	3.45
38	Corrugated construction		Corrugated
39	Thickness of the corrugated sheath	inch	0.03
40	Inner radius of the corrugated sheath	inch	1.91
41	Outer radius of the corrugated sheath	inch	2.035
42	Thickness	inch	0.25
43	Diameter	inch	4.07

Jacket

44	Is layer present?		Yes
45	Material		polyethylene
46	Thermal resistivity	K.m/w	3.5
47	Thickness	inch	0.155
48	Diameter	inch	4.38

Overall cable diameter

49	Diameter	inch	4.38

No	Description/Value	Unit	1
SPECIFIC INSTALLATION DATA			
Bonding			
1	1-CON, sheaths single point bonded, triang. configuration		Yes
Loss factor constant			
2	Loss factor constant		0.3
Duct construction			
3	PVC duct in concrete or buried		Yes
4	Resistivity (RH)		6
Cables touching			
5	Single conductor cables NOT touching		Yes

No	Symbol	Description	Unit	1	2	3	4	5	6
Temperature calculations									
1		Cable type no		1	1	1	1	1	1
2		Circuit no		1	1	1	2	2	2
3		Phase		A	B	C	A	B	C
4	θ_c	Conductor temperature	°C	65.7	65.3	66.1	66.2	64.4	64.7
5	θ_i	Sheath/Shield temperature	°C	62.7	62.3	63	63.2	61.4	61.7
6	θ_j	Armour/Pipe or Jacket temperature	°C	62.3	61.9	62.7	62.8	61	61.3
7	θ_s	Exterior duct temperature	°C	4.5	4.5	4.6	4.6	4.4	4.5
8	θ_a	Ambient temperature	°C	36.4	36.4	36.4	36.4	36.4	36.4

Cable type no: 1
Cable type: EXTRUDED
Cable ID: 115C2.5MX5
Cable title: 115KV 2500 KCMIL CU XLPE 800mil Southwire

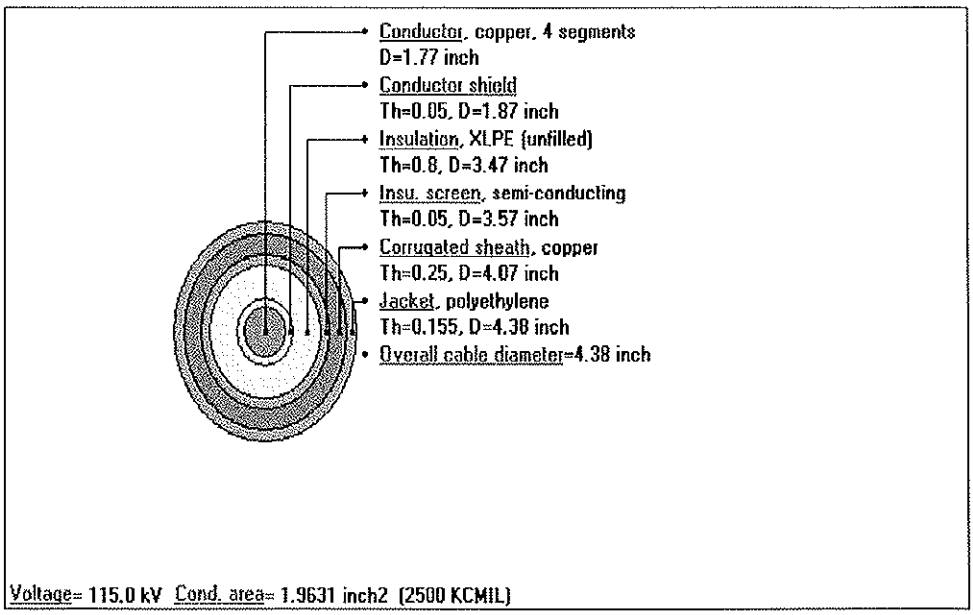

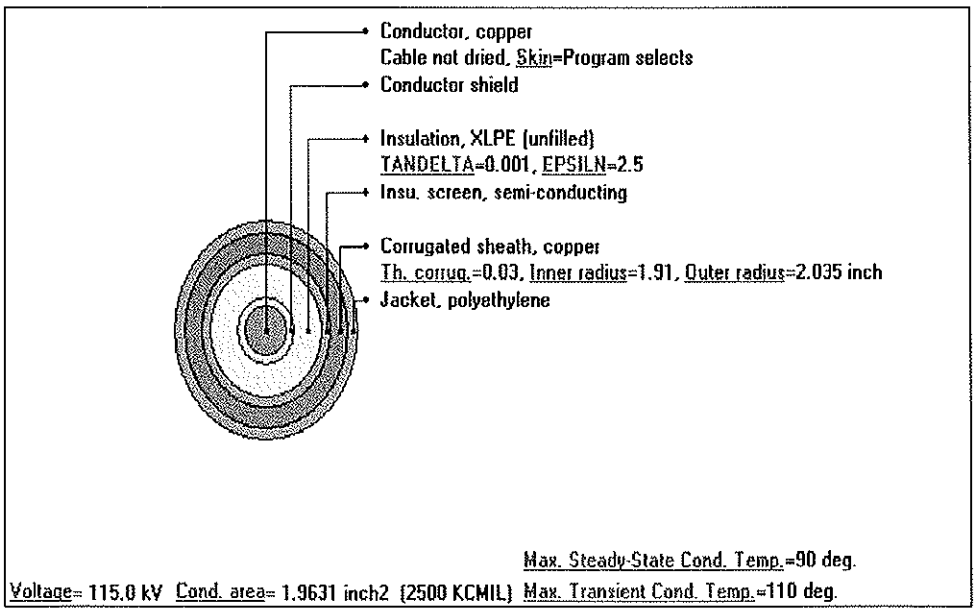

Summary Results

Study: MA-US-1&2 Yesler to Union Sub Ampacity Study, June 2011
Execution: W&U-3D-14"HP w/o-18'd,7'h 2500kcmilCu-2@603A@88.5h
Date: 6/10/2011
Frequency: 60 Hz
Conductor Resistances: IEC-228
Fraction of conductor current returning through sheath for single phase cables: 1

Installation Type: Multiple Duct Banks Backfills

Parameter						Unit	Value
Ambient Soil Temperature at Installation Depth						°C	36.4
Thermal Resistivity of Native Soil						°C.m/W	1
Layers		Dimensions [ft]				Type	Thermal Resistivity [°C.m/W]
No.	Name	X Center	Y Center	Width	Height		
1	DB 4X2	0	20.032	1.854	4.063	Standard ductbank	0.6
2	Backfill	0	8.982	2.001	17.999	Backfill	0.75
3	Backfill	-1.17	14.013	0.328	16.024	Backfill	8.333
4	Backfill	1.17	14.013	0.328	16.024	Backfill	8.333
Heat Source Type							Temperature
Heat Source Temperature						°C	185
Heat Source X Center						ft	-8.43
Heat Source Y Center						ft	6
Heat Source Diameter						inch	14
Heat Source Insulation Diameter						inch	26
Heat Source Insulation Thermal Resistivity						°C.m/W	78.084

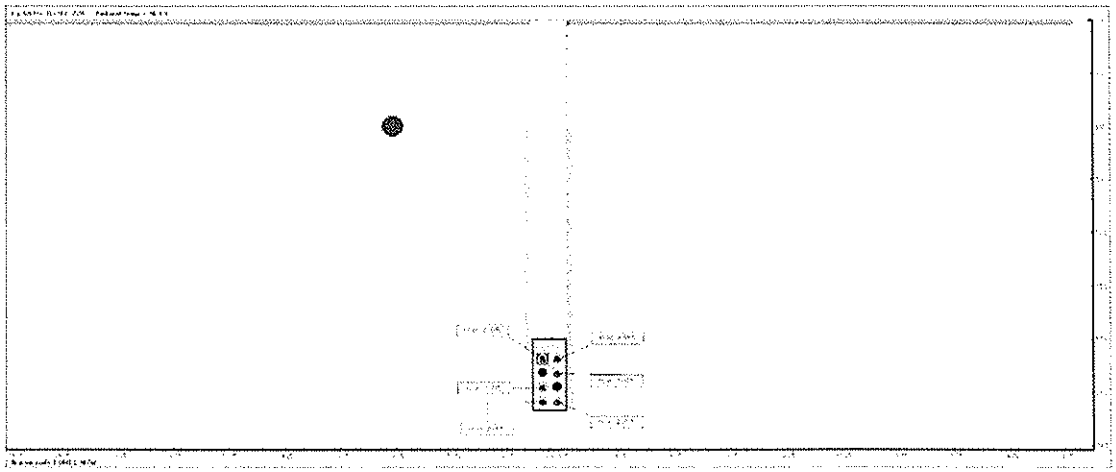

Summary Results

Solution converged

Cable\Cable type no	Circuit	Phase	Location		Load Factor	Temperature	Ampacity
			X[ft]	Y[ft]	[p.u.]	[°C]	[A]
1\1	1	A	0.401	19.159	0.8	88	603
2\1	1	B	-0.401	19.159	0.8	88.5	603
3\1	1	C	-0.401	20.763	0.8	88.2	603
4\1	2	A	0.401	19.961	0.8	88.1	603
5\1	2	B	0.401	21.565	0.8	85.2	603
6\1	2	C	-0.401	21.565	0.8	86.2	603

Cables input data

Study: MA-US-1&2 Yesler to Union Sub Ampacity Study, June 2011
Execution: W&U-3D-14"HP w/o-18'd,7'h 2500kcmilCu-2@603A@88.5h
Date: 6/10/2011

No	Description	Unit	1
General cable information			
1	Cable type no		1
2	Number of cores		1
3	Voltage	kV	115
4	Conductor area	$inch^2$	1.9631
5	Maximum Steady-State Conductor Temperature	°C	90
6	Maximum Emergency Conductor Temperature	°C	110
Construction			
Conductor			
7	Material		copper
8	Resistivity @20°C	uΩ.cm	1.7241
9	Temperature coefficient	1/K	0.00393
10	Reciprocal of temperature coefficient of resistance (BETA)	°C	234.5
11	Volumetric specific heat (SH)	$J/K.m^3$	3.45
12	Construction		4 segments
13	Is cable dried?		No
14	ks (Skin effect coefficient)		0.44
15	kp (Proximity effect coefficient)		0.37
16	Diameter	inch	1.77
Conductor shield			
17	Is layer present?		Yes
18	Thickness	inch	0.05
19	Diameter	inch	1.87
Insulation			
20	Is layer present?		Yes
21	Material		XLPE (unfilled)
22	Thermal resistivity	K.m/w	3.5
23	Dielectric loss factor - (tan δ)		0.001
24	Relative permittivity (ε)		2.5
25	Thickness	inch	0.8
26	Diameter	inch	3.47
Insulation screen			
27	Is layer present?		Yes
28	Material		semi-conducting
29	Thickness	inch	0.05
30	Diameter	inch	3.57

Sheath

31	Is layer present?		Yes
32	Is around each core? (Only for Three core cable)		No
33	Material		copper
34	Resistivity @20°C	uΩ.cm	1.7241
35	Temperature coefficient	1/K	0.00393
36	Reciprocal of temperature coefficient of resistance (BETA)	°C	234.5
37	Volumetric specific heat (SH)	$J/K.m^3$	3.45
38	Corrugated construction		Corrugated
39	Thickness of the corrugated sheath	inch	0.03
40	Inner radius of the corrugated sheath	inch	1.91
41	Outer radius of the corrugated sheath	inch	2.035
42	Thickness	inch	0.25
43	Diameter	inch	4.07

Jacket

44	Is layer present?		Yes
45	Material		polyethylene
46	Thermal resistivity	K.m/w	3.5
47	Thickness	inch	0.155
48	Diameter	inch	4.38

Overall cable diameter

49	Diameter	inch	4.38

No	Description/Value	Unit	1
SPECIFIC INSTALLATION DATA			
Bonding			
1	1-CON, sheaths single point bonded, triang. configuration		Yes
Loss factor constant			
2	Loss factor constant		0.3
Duct construction			
3	PVC duct in concrete or buried		Yes
4	Resistivity (RH)		6
Cables touching			
5	Single conductor cables NOT touching		Yes

No	Symbol	Description	Unit	1	2	3	4	5	6
Temperature calculations									
1		Cable type no		1	1	1	1	1	1
2		Circuit no		1	1	1	2	2	2
3		Phase		A	B	C	A	B	C
4	θ_c	Conductor temperature	°C	88	88.5	88.2	88.1	85.2	86.2
5	θ_i	Sheath/Shield temperature	°C	84.8	85.2	84.9	84.8	82	83
6	θ_j	Armour/Pipe or Jacket temperature	°C	84.4	84.8	84.5	84.4	81.6	82.6
7	θ_s	Exterior duct temperature	°C	4.8	4.7	4.8	4.8	4.6	4.7
8	θ_a	Ambient temperature	°C	36.4	36.4	36.4	36.4	36.4	36.4

Cable type no: 1
Cable type: EXTRUDED
Cable ID: 115C2.5MX5
Cable title: 115KV 2500 KCMIL CU XLPE 800mil Southwire

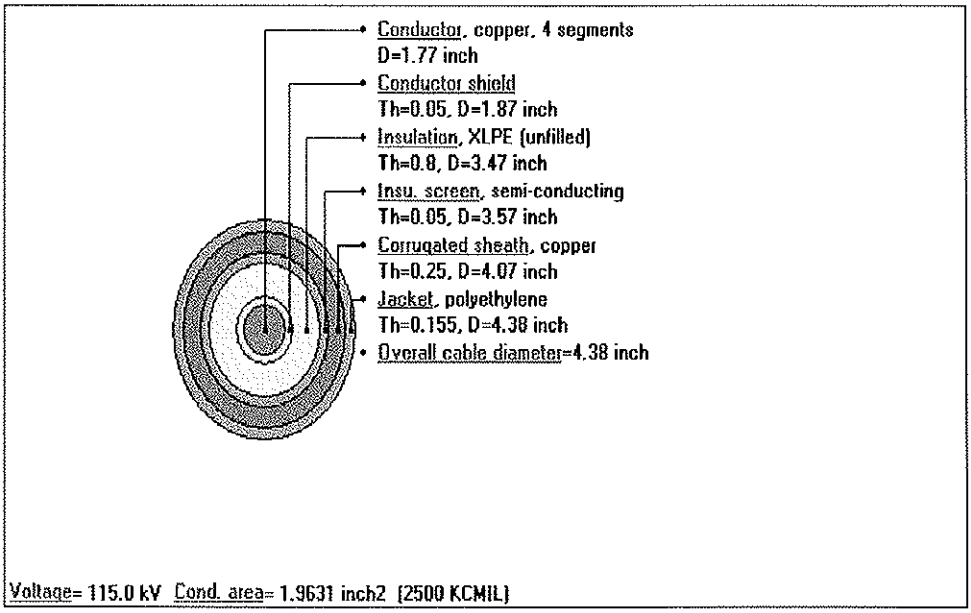

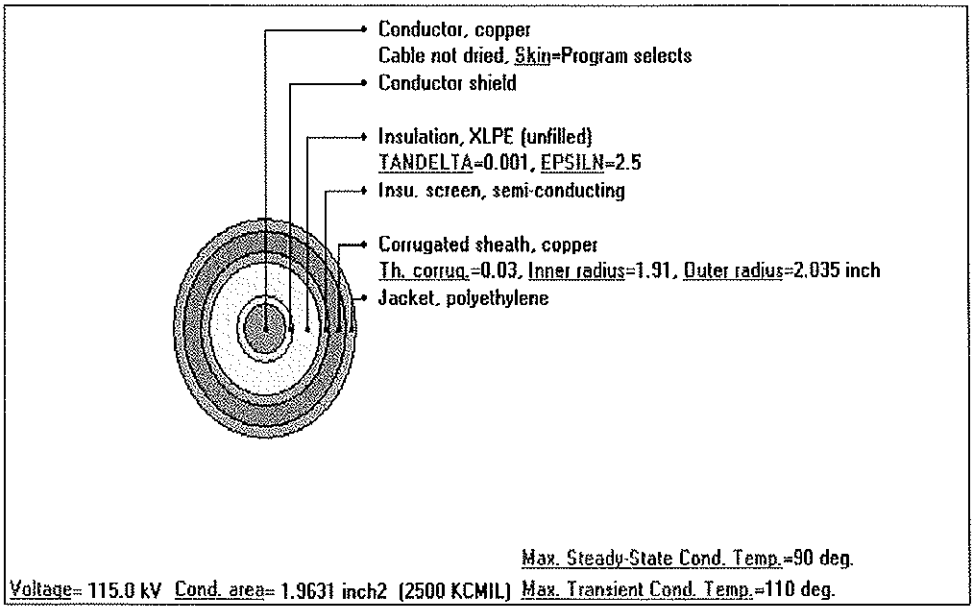

Summary Results

Study: MA-US-1&2 Yesler to Union Sub Ampacity Study, June 2011
Execution: W&U-4A-14"HP w/insl-18'd,0'h 2500kcmilCu-2@603A@70.8h
Date: 6/6/2011
Frequency: 60 Hz
Conductor Resistances: IEC-228
Fraction of conductor current returning through sheath for single phase cables: 1

Installation Type: Multiple Duct Banks Backfills

Parameter						Unit	Value
Ambient Soil Temperature at Installation Depth						°C	36.4
Thermal Resistivity of Native Soil						°C.m/W	1
Layers		Dimensions [ft]				Type	Thermal Resistivity [°C.m/W]
No.	Name	X Center	Y Center	Width	Height		
1	DB 4X2	0	20.032	1.854	4.063	Standard ductbank	0.6
2	Backfill	0	8.982	2.001	17.999	Backfill	0.75
3	DB 3X4	13	4.613	2.857	2.226	Standard ductbank	0.6
4	DB 6X2	3.5	5.792	1.417	3.583	Standard ductbank	0.6
Heat Source Type							Temperature
Heat Source Temperature						°C	185
Heat Source X Center						ft	0
Heat Source Y Center						ft	6
Heat Source Diameter						inch	14
Heat Source Insulation Diameter						inch	26
Heat Source Insulation Thermal Resistivity						°C.m/W	78.084

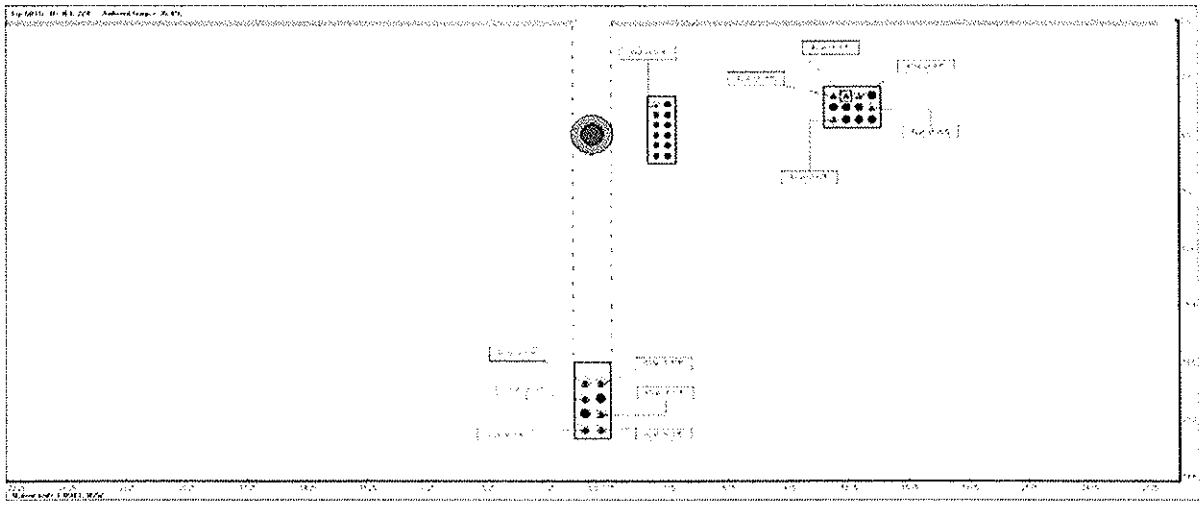

Summary Results

Solution converged

Cable\Cable type no	Circuit	Phase	Location		Load Factor	Temperature	Ampacity
			X[ft]	Y[ft]	[p.u.]	[°C]	[A]
1\1	1	A	0.401	19.159	0.8	69.9	603
2\1	1	B	-0.401	19.159	0.8	70.1	603
3\1	1	C	-0.401	19.961	0.8	70.5	603
4\1	2	A	-0.401	21.565	0.8	69.8	603
5\1	2	B	0.401	21.565	0.8	70.3	603
6\1	2	C	0.401	20.763	0.8	70.8	603
7\2	3	A	11.975	4.026	0.8	88.3	423
8\2	3	B	12.133	4.026	0.8	89.6	423
9\2	3	C	12.054	3.891	0.8	88.3	423
10\2	4	A	12.605	4.026	0.8	91.4	423
11\2	4	B	12.762	4.026	0.8	91.5	423
12\2	4	C	12.684	3.891	0.8	90.8	423
13\2	5	A	13.238	4.026	0.8	89.9	423
14\2	5	B	13.392	4.026	0.8	88.8	423
15\2	5	C	13.317	3.891	0.8	88.7	423
16\2	6	A	13.868	4.659	0.8	86.3	423
17\2	6	B	14.026	4.659	0.8	85.2	423
18\2	6	C	13.947	4.524	0.8	86.1	423
19\2	7	A	11.975	5.289	0.8	87.4	423
20\2	7	B	12.133	5.289	0.8	87.8	423
21\2	7	C	12.054	5.154	0.8	88.1	423
22\3	8	ABC	3.229	4.51	0.8	86.5	200

Cables input data

Study: MA-US-1&2 Yesler to Union Sub Ampacity Study, June 2011
Execution: W&U-4A-14"HP w/insl-18'd,0'h 2500kcmilCu-2@603A@70.8h
Date: 6/6/2011

No	Description	Unit	1	2	3
General cable information					
1	Cable type no		1	2	3
2	Number of cores		1	1	3
3	Voltage	kV	115	13.8	13.8
4	Conductor area	$inch^2$	1.9631	0.7854	0.1318
5	Maximum Steady-State Conductor Temperature	°C	90	105	90
6	Maximum Emergency Conductor Temperature	°C	110	130	110
Construction					
Conductor					
7	Material		copper	copper	copper
8	Resistivity @20°C	uΩ.cm	1.7241	1.7241	1.7241
9	Temperature coefficient	1/K	0.00393	0.00393	0.00393
10	Reciprocal of temperature coefficient of resistance (BETA)	°C	234.5	234.5	234.5
11	Volumetric specific heat (SH)	$J/K.m^3$	3.45	3.45	3.45
12	Construction		4 segments	compressed	compressed
13	Is cable dried?		No	No	No
14	ks (Skin effect coefficient)		0.44	1	1
15	kp (Proximity effect coefficient)		0.37	1	1
16	Diameter	inch	1.77	1.117	0.456
Conductor shield					
17	Is layer present?		Yes	Yes	Yes
18	Thickness	inch	0.05	0.02	0.012
19	Diameter	inch	1.87	1.157	0.48
Insulation					
20	Is layer present?		Yes	Yes	Yes
21	Material		XLPE (unfilled)	EPR	XLPE (unfilled)
22	Thermal resistivity	K.m/w	3.5	5	3.5
23	Dielectric loss factor - (tan δ)		0.001	0.02	0.004
24	Relative permittivity (ε)		2.5	3	2.5
25	Thickness	inch	0.8	0.175	0.175
26	Diameter	inch	3.47	1.507	
Insulation screen					
27	Is layer present?		Yes	Yes	Yes
28	Material		semi-conducting	semi-conducting	semi-conducting
29	Thickness	inch	0.05	0.042	0.06
30	Diameter	inch	3.57	1.591	
Sheath					
31	Is layer present?		Yes	No	Yes
32	Is around each core? (Only for Three core cable)		No		Yes
33	Material		copper		copper
34	Resistivity @20°C	uΩ.cm	1.7241		1.7241
35	Temperature coefficient	1/K	0.00393		0.00393
36	Reciprocal of temperature coefficient of resistance (BETA)	°C	234.5		234.5
37	Volumetric specific heat (SH)	$J/K.m^3$	3.45		3.45
38	Corrugated construction		Corrugated		Non-corrugated
39	Thickness of the corrugated sheath	inch	0.03		
40	Inner radius of the corrugated sheath	inch	1.91		
41	Outer radius of the corrugated sheath	inch	2.035		
42	Thickness	inch	0.25		0.005
43	Diameter	inch	4.07	Yes	

Concentric neutral/Skid wires					
44	Is layer present?		No	copper	No
45	Is around each core? (Only for Three core cable)			1.7241	
46	Material			0.00393	
47	Resistivity @20°C	mΩ.cm		234.5	
48	Temperature coefficient	1/K		3.45	
49	Reciprocal of temperature coefficient of resistance (BETA)	°C			
50	Volumetric specific heat (SH)	J/K.m³		23	
51	Length of lay	inch		Unknown	
52	Number of wires			0.045	
53	Wire gauge			1.681	
54	Thickness	inch			
55	Diameter	inch	Yes	Yes	Yes
Jacket					
56	Is layer present?		3.5	3.5	3.5
57	Material		0.155	0.095	0.105
58	Thermal resistivity	K.m/w	4.38	1.871	2.27851
59	Thickness	inch			
60	Diameter	inch	4.38	1.871	2.27851
Overall cable diameter					
61	Diameter	inch			0.55426
Other useful dimensions for three core cable					
62	Distance between conductor center and cable center	inch			
63	Axial spacing between conductors of the same circuit	inch			

No	Description/Value	Unit	1	2	3
SPECIFIC INSTALLATION DATA					
Bonding					
1	1-CON, sheaths single point bonded, triang. configuration		Yes		
2	1-CON, sheaths bonded ends, triangular configuration			Yes	
3	3-CON, sheath/screen around each core two point bonded				Yes
Loss factor constant					
4	Loss factor constant		0.3	0.3	0.3
Duct construction					
5	PVC duct in concrete or buried		Yes	Yes	
6	Asbestos duct in concrete or buried				Yes
7	Resistivity (RII)		6	6	2
Cables touching					
8	Single conductor cables NOT touching		Yes		
9	Single conductor cables touching			Yes	

No	Symbol	Description	Unit	1	2	3	4	5	6	7	8	9	10	11
Temperature calculations														
1		Cable type no		1	1	1	1	1	1	2	2	2	2	2
2		Circuit no		1	1	1	2	2	2	3	3	3	4	4
3		Phase		A	B	C	A	B	C	A	B	C	A	B
4	θ_c	Conductor temperature	°C	69.9	70.1	70.5	69.8	70.3	70.8	88.3	89.6	88.3	91.4	91.5
5	θ_s	Sheath/Shield temperature	°C	66.9	67	67.5	66.8	67.2	67.7	85.6	87	85.7	88.7	88.9
6	θ_j	Armour/Pipe or Jacket temperature	°C	66.4	66.6	67	66.3	66.8	67.3	85	86.3	85	88.1	88.2
7	θ_e	Exterior duct temperature	°C	3.9	4	4	4.2	4.2	4.1	11.6	11.6	11.6	11.7	11.7
8	θ_a	Ambient temperature	°C	36.4	36.4	36.4	36.4	36.4	36.4	36.4	36.4	36.4	36.4	36.4

No	Symbol	Description	Unit	12	13	14	15	16	17	18	19	20	21	22
Temperature calculations														
1		Cable type no		2	2	2	2	2	2	2	2	2	2	3
2		Circuit no		4	5	5	5	6	6	6	7	7	7	8
3		Phase		C	A	B	C	A	B	C	A	B	C	ABC
4	θ_c	Conductor temperature	°C	90.8	89.9	88.8	88.7	86.3	85.2	86.1	87.4	87.8	88.1	86.5
5	θ_s	Sheath/Shield temperature	°C	88.1	87.3	86.2	86	83.6	82.6	83.4	84.8	85.2	85.5	81.9
6	θ_j	Armour/Pipe or Jacket temperature	°C	87.5	86.6	85.6	85.4	83	81.9	82.8	84.2	84.6	84.9	79.7
7	θ_e	Exterior duct temperature	°C	11.7	11.5	11.5	11.5	11.7	11.7	11.7	12.3	12.3	12.3	13.1
8	θ_a	Ambient temperature	°C	36.4	36.4	36.4	36.4	36.4	36.4	36.4	36.4	36.4	36.4	36.4

Cable type no: 1
Cable type: EXTRUDED
Cable ID: 115C2.SMXS
Cable title: 115KV 2500 KCMIL CU XLPE 800mil Southwire

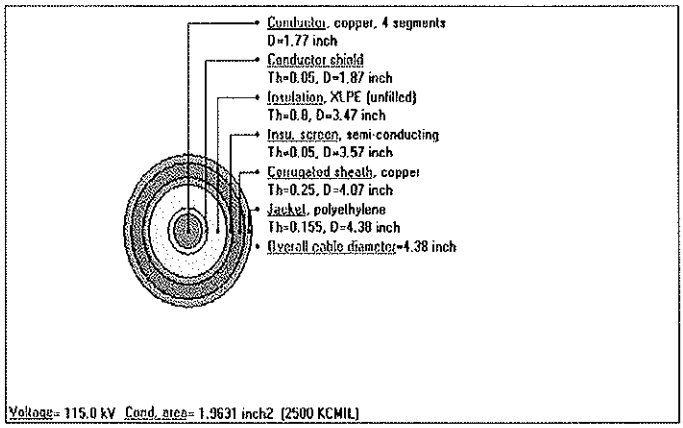

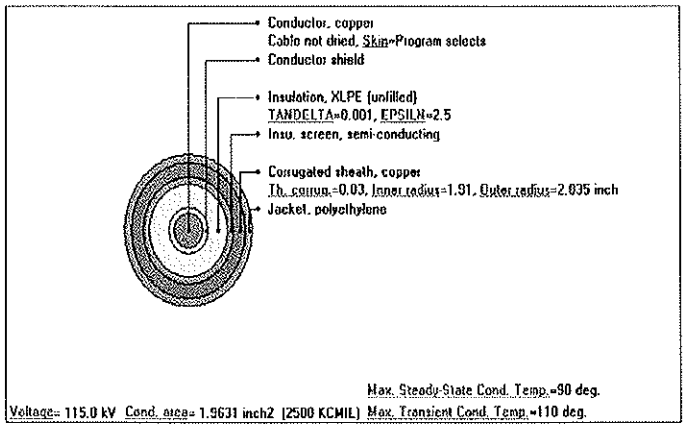

Cable type no: 2
Cable type: OTHER
Cable ID: 015C1.0ME3
Cable title: 15kV 1000KCMIL Cu 175 MIL EPR 1/C SCL Alaskan Way 623670

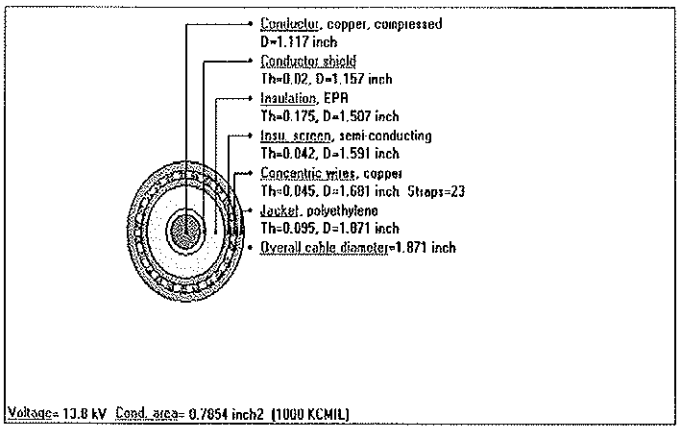

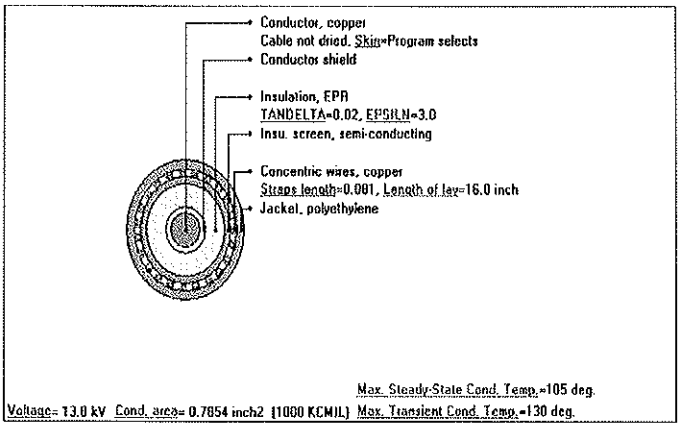

Cable type no: 3
Cable type: EXTRUDED
Cable ID: 015C3/0 X
Cable title: 15kV 3/0 Cu 175 MIL XLPE 3/C SCL Alaska Way 613526

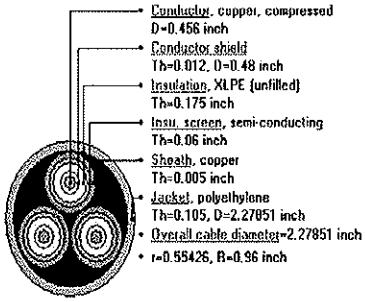

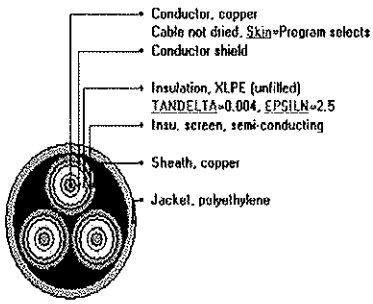

Summary Results

Study: MA-US-1&2 Yesler to Union Sub Ampacity Study, June 2011
Execution: W&U-4C-14"HP w/insl-18'd,0'h 2500kcmilCu-2@603A@74.9h
Date: 6/10/2011
Frequency: 60 Hz
Conductor Resistances: IEC-228
Fraction of conductor current returning through sheath for single phase cables: 1

Installation Type: Multiple Duct Banks Backfills

Parameter						Unit	Value
Ambient Soil Temperature at Installation Depth						°C	36.4
Thermal Resistivity of Native Soil						°C.m/W	1
Layers		**Dimensions [ft]**				**Type**	**Thermal Resistivity [°C.m/W]**
No.	**Name**	**X Center**	**Y Center**	**Width**	**Height**		
1	DB 4X2	0	20.032	1.854	4.063	Standard ductbank	0.6
2	Backfill	0	8.982	2.001	17.999	Backfill	0.75
3	DB 3X4	13	4.613	2.857	2.226	Standard ductbank	0.6
4	DB 6X2	3.5	5.792	1.417	3.583	Standard ductbank	0.6
5	Backfill	-1.172	14.013	0.331	16.024	Backfill	8.333
6	Backfill	1.172	14.013	0.331	16.024	Backfill	8.333
Heat Source Type							Temperature
Heat Source Temperature						°C	185
Heat Source X Center						ft	0
Heat Source Y Center						ft	6
Heat Source Diameter						inch	14
Heat Source Insulation Diameter						inch	26
Heat Source Insulation Thermal Resistivity						°C.m/W	78.084

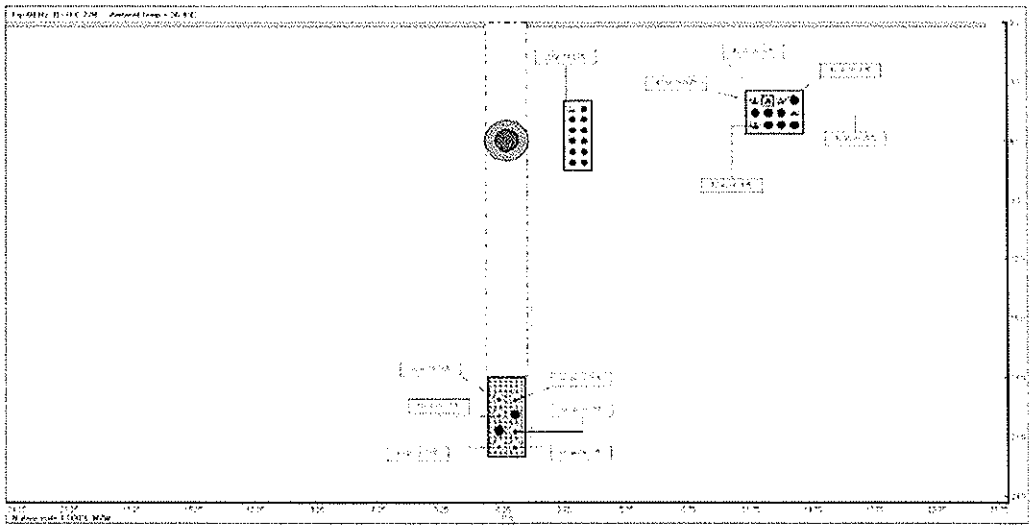

Summary Results

Solution converged

Cable\Cable type no	Circuit	Phase	Location		Load Factor	Temperature	Ampacity
			X[ft]	Y[ft]	[p.u.]	[°C]	[A]
1\1	1	A	0.401	19.159	0.8	74.5	603
2\1	1	B	-0.401	19.159	0.8	74.7	603
3\1	1	C	-0.401	19.961	0.8	75.1	603
4\1	2	A	-0.401	21.565	0.8	72.6	603
5\1	2	B	0.401	21.565	0.8	73.1	603
6\1	2	C	0.401	20.763	0.8	74.9	603
7\2	3	A	11.975	4.026	0.8	88.3	423
8\2	3	B	12.133	4.026	0.8	89.7	423
9\2	3	C	12.054	3.891	0.8	88.4	423
10\2	4	A	12.605	4.026	0.8	91.5	423
11\2	4	B	12.762	4.026	0.8	91.6	423
12\2	4	C	12.684	3.891	0.8	90.9	423
13\2	5	A	13.238	4.026	0.8	90	423
14\2	5	B	13.392	4.026	0.8	88.9	423
15\2	5	C	13.317	3.891	0.8	88.7	423
16\2	6	A	13.868	4.659	0.8	86.3	423
17\2	6	B	14.026	4.659	0.8	85.3	423
18\2	6	C	13.947	4.524	0.8	86.1	423
19\2	7	A	11.975	5.289	0.8	87.5	423
20\2	7	B	12.133	5.289	0.8	87.9	423
21\2	7	C	12.054	5.154	0.8	88.3	423
22\3	8	ABC	3.229	4.51	0.8	86.7	200

Cables input data

Study: MA-US-1&2 Yesler to Union Sub Ampacity Study, June 2011
Execution: W&U-4C-14"HP w/insl-18'd,0'h 2500kcmilCu-2@603A@74.9h
Date: 6/10/2011

No	Description	Unit	1	2	3
General cable information					
1	Cable type no		1	2	3
2	Number of cores		1	1	3
3	Voltage	kV	115	13.8	13.8
4	Conductor area	$inch^2$	1.9631	0.7854	0.1318
5	Maximum Steady-State Conductor Temperature	°C	90	105	90
6	Maximum Emergency Conductor Temperature	°C	110	130	110
Construction					
Conductor					
7	Material		copper	copper	copper
8	Resistivity @20°C	uΩ.cm	1.7241	1.7241	1.7241
9	Temperature coefficient	1/K	0.00393	0.00393	0.00393
10	Reciprocal of temperature coefficient of resistance (BETA)	°C	234.5	234.5	234.5
11	Volumetric specific heat (SH)	$J/K.m^3$	3.45	3.45	3.45
12	Construction		4 segments	compressed	compressed
13	Is cable dried?		No	No	No
14	ks (Skin effect coefficient)		0.44	1	1
15	kp (Proximity effect coefficient)		0.37	1	1
16	Diameter	inch	1.77	1.117	0.456
Conductor shield					
17	Is layer present?		Yes	Yes	Yes
18	Thickness	inch	0.05	0.02	0.012
19	Diameter	inch	1.87	1.157	0.48
Insulation					
20	Is layer present?		Yes	Yes	Yes
21	Material		XLPE (unfilled)	EPR	XLPE (unfilled)
22	Thermal resistivity	K.m/W	3.5	5	3.5
23	Dielectric loss factor - (tan δ)		0.001	0.02	0.004
24	Relative permittivity (ε)		2.5	3	2.5
25	Thickness	inch	0.8	0.175	0.175
26	Diameter	inch	3.47	1.507	
Insulation screen					
27	Is layer present?		Yes	Yes	Yes
28	Material		semi-conducting	semi-conducting	semi-conducting
29	Thickness	inch	0.05	0.042	0.06
30	Diameter	inch	3.57	1.591	
Sheath					
31	Is layer present?		Yes	No	Yes
32	Is around each core? (Only for Three core cable)		No		Yes
33	Material		copper		copper
34	Resistivity @20°C	uΩ.cm	1.7241		1.7241
35	Temperature coefficient	1/K	0.00393		0.00393
36	Reciprocal of temperature coefficient of resistance (BETA)	°C	234.5		234.5
37	Volumetric specific heat (SH)	$J/K.m^3$	3.45		3.45
38	Corrugated construction		Corrugated		Non-corrugated
39	Thickness of the corrugated sheath	inch	0.03		
40	Inner radius of the corrugated sheath	inch	1.91		
41	Outer radius of the corrugated sheath	inch	2.035		
42	Thickness	inch	0.25		0.005
43	Diameter	inch	4.07	Yes	

Concentric neutral/Skid wires

44	Is layer present?		No	copper	No
45	Is around each core? (Only for Three core cable)			1.7241	
46	Material			0.00393	
47	Resistivity @20°C	uΩ.cm		234.5	
48	Temperature coefficient	1/K		3.45	
49	Reciprocal of temperature coefficient of resistance (BETA)	°C			
50	Volumetric specific heat (SH)	J/K.m³		23	
51	Length of lay	inch		Unknown	
52	Number of wires			0.045	
53	Wire gauge			1.681	
54	Thickness	inch			
55	Diameter	inch	Yes	Yes	Yes

Jacket

56	Is layer present?		3.5	3.5	3.5
57	Material		0.155	0.095	0.105
58	Thermal resistivity	K.m/w	4.38	1.871	2.27851
59	Thickness	inch			
60	Diameter	inch	4.38	1.871	2.27851

Overall cable diameter

61	Diameter	inch			0.55426

Other useful dimensions for three core cable

62	Distance between conductor center and cable center	inch			
63	Axial spacing between conductors of the same circuit	inch			

No	Description/Value	Unit	1	2	3
SPECIFIC INSTALLATION DATA					
Bonding					
1	1-CON, sheaths single point bonded, triang. configuration		Yes		
2	1-CON, sheaths bonded ends, triangular configuration			Yes	
3	3-CON, sheath/screen around each core two point bonded				Yes
Loss factor constant					
4	Loss factor constant		0.3	0.3	0.3
Duct construction					
5	PVC duct in concrete or buried		Yes	Yes	
6	Asbestos duct in concrete or buried				Yes
7	Resistivity (RII)		6	6	2
Cables touching					
8	Single conductor cables NOT touching		Yes		
9	Single conductor cables touching			Yes	

No	Symbol	Description	Unit	1	2	3	4	5	6	7	8	9	10	11
Temperature calculations														
1		Cable type no		1	1	1	1	1	1	2	2	2	2	2
2		Circuit no		1	1	1	2	2	2	3	3	3	4	4
3		Phase		A	B	C	A	B	C	A	B	C	A	B
4	θ_c	Conductor temperature	°C	74.5	74.7	75.1	72.6	73.1	74.9	88.3	89.7	88.4	91.5	91.6
5	θ_s	Sheath/Shield temperature	°C	71.4	71.6	72	69.5	70	71.8	85.7	87	85.7	88.8	88.9
6	θ_j	Armour/Pipe or Jacket temperature	°C	70.9	71.2	71.5	69.1	69.6	71.4	85	86.4	85.1	88.2	88.3
7	θ_x	Exterior duct temperature	°C	4.7	4.8	4.8	4.7	4.7	4.8	11.6	11.6	11.6	11.7	11.7
8	θ_a	Ambient temperature	°C	36.4	36.4	36.4	36.4	36.4	36.4	36.4	36.4	36.4	36.4	36.4

No	Symbol	Description	Unit	12	13	14	15	16	17	18	19	20	21	22
Temperature calculations														
1		Cable type no		2	2	2	2	2	2	2	2	2	2	3
2		Circuit no		4	5	5	5	6	6	6	7	7	7	8
3		Phase		C	A	B	C	A	B	C	A	B	C	ABC
4	θ_c	Conductor temperature	°C	90.9	90	88.9	88.7	86.3	85.3	86.1	87.5	87.9	88.3	86.7
5	θ_s	Sheath/Shield temperature	°C	88.2	87.3	86.3	86.1	83.7	82.6	83.5	84.9	85.3	85.6	82.1
6	θ_j	Armour/Pipe or Jacket temperature	°C	87.6	86.7	85.6	85.4	83	82	82.8	84.3	84.6	85	79.9
7	θ_x	Exterior duct temperature	°C	11.7	11.5	11.5	11.5	11.7	11.7	11.7	12.3	12.3	12.3	13.2
8	θ_a	Ambient temperature	°C	36.4	36.4	36.4	36.4	36.4	36.4	36.4	36.4	36.4	36.4	36.4

Cable type no: 1
Cable type: EXTRUDED
Cable ID: 115C2.5MX5
Cable title: 115KV 2500 KCMIL CU XLPE 800mil Southwire

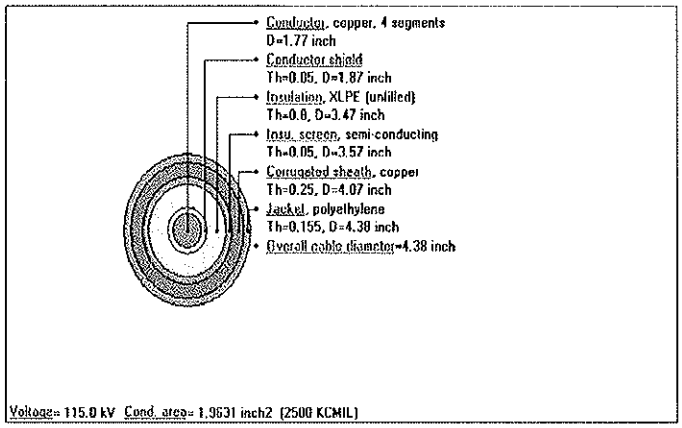

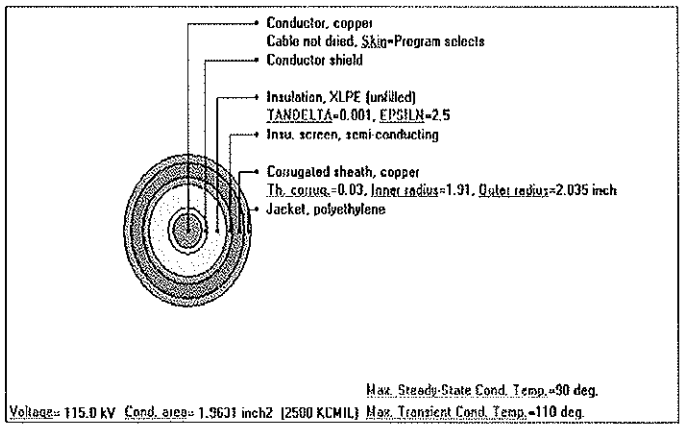

Cable type no: 2
Cable type: OTHER
Cable ID: 015C1.0ME3
Cable title: 15kV 1000KCMIL Cu 175 MIL EPR 1/C SCL Alaskan Way 623670

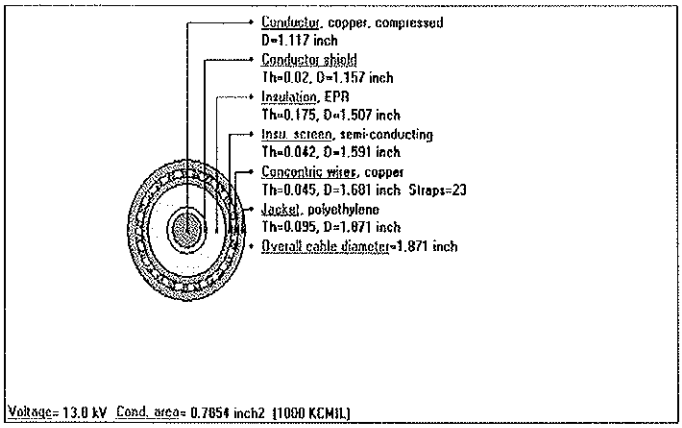

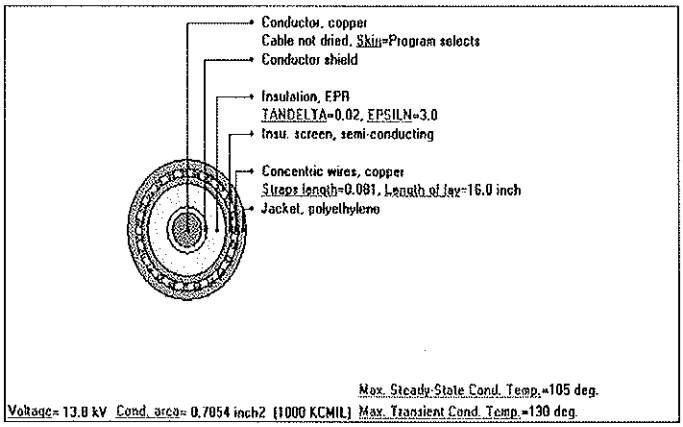

Cable type no: 3
Cable type: EXTRUDED
Cable ID: 015C3/0 X
Cable title: 15kV 3/0 Cu 175 MIL XLPE 3/C SCL Alaska Way 613526

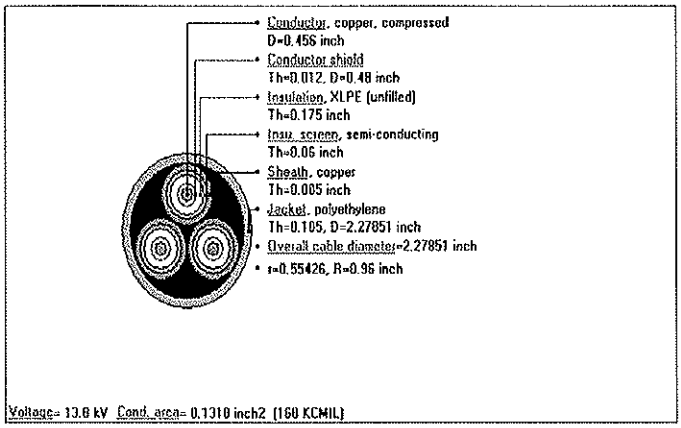

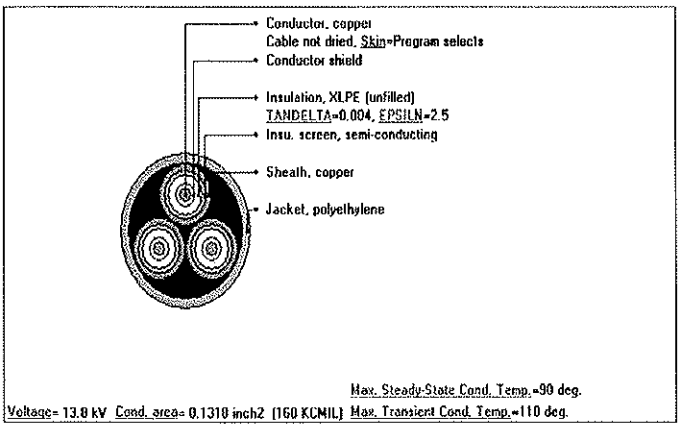

Summary Results

Study: MA-US-1&2 Yesler to Union Sub Ampacity Study, June 2011

Execution: W&U-5A-14"HP w/insl-18'd,13'h 2500kcmilCu-2@603A@71.2h

Date: 6/6/2011

Frequency: 60 Hz

Conductor Resistances: IEC-228

Fraction of conductor current returning through sheath for single phase cables: 1

Installation Type: Multiple Duct Banks Backfills

Parameter						Unit	Value
Ambient Soil Temperature at Installation Depth						°C	36.4
Thermal Resistivity of Native Soil						°C.m/W	1
Layers		**Dimensions [ft]**				**Type**	**Thermal Resistivity [°C.m/W]**
No.	**Name**	**X Center**	**Y Center**	**Width**	**Height**		
1	DB 4X2	13	20.032	1.854	4.063	Standard ductbank	0.6
2	Backfill	13	11.881	1.998	12.228	Backfill	0.75
3	DB 3X4	13	4.613	2.857	2.226	Standard ductbank	0.6
4	DB 6X2	3.5	5.792	1.417	3.583	Standard ductbank	0.6
Heat Source Type							Temperature
Heat Source Temperature						°C	185
Heat Source X Center						ft	0
Heat Source Y Center						ft	6
Heat Source Diameter						inch	14
Heat Source Insulation Diameter						inch	26
Heat Source Insulation Thermal Resistivity						°C.m/W	78.084

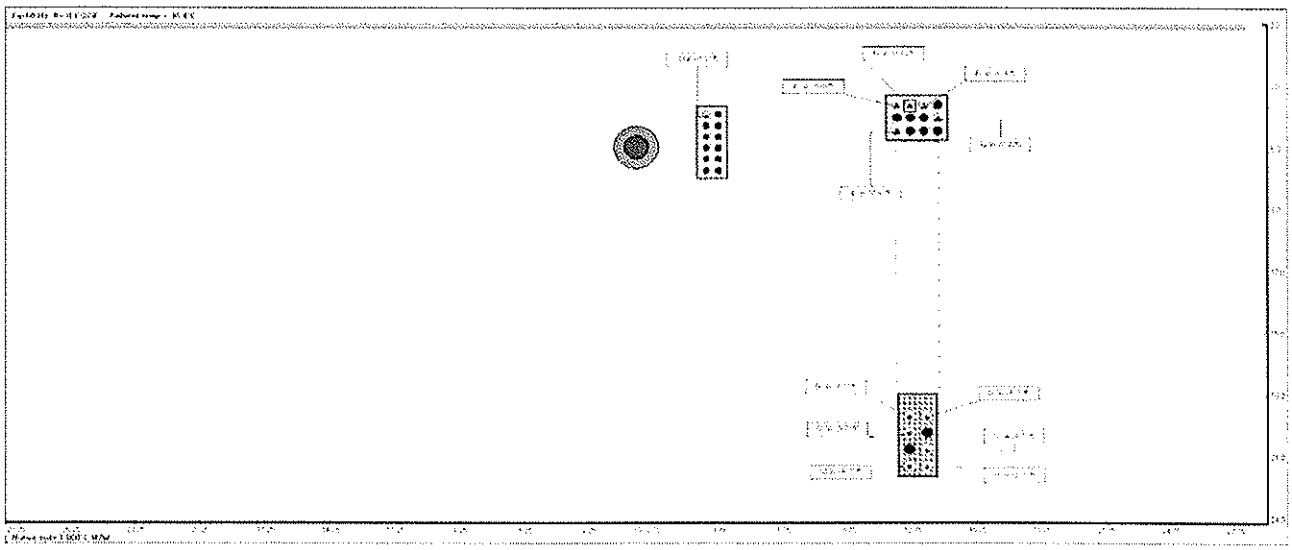

Summary Results

Solution converged

Cable\Cable type no	Circuit	Phase	Location		Load Factor	Temperature	Ampacity
			X[ft]	Y[ft]	[p.u.]	[°C]	[A]
1 \ 1	1	A	13.401	19.159	0.8	70.3	603
2 \ 1	1	B	12.599	19.159	0.8	70.9	603
3 \ 1	1	C	12.599	19.961	0.8	71.3	603
4 \ 1	2	A	12.599	21.565	0.8	70.5	603
5 \ 1	2	B	13.401	21.565	0.8	70.6	603
6 \ 1	2	C	13.401	20.763	0.8	71.2	603
7 \ 2	3	A	11.975	4.026	0.8	88.3	423
8 \ 2	3	B	12.133	4.026	0.8	89.7	423
9 \ 2	3	C	12.054	3.891	0.8	88.3	423
10 \ 2	4	A	12.605	4.026	0.8	91.5	423
11 \ 2	4	B	12.762	4.026	0.8	91.5	423
12 \ 2	4	C	12.684	3.891	0.8	90.9	423
13 \ 2	5	A	13.238	4.026	0.8	89.9	423
14 \ 2	5	B	13.392	4.026	0.8	88.9	423
15 \ 2	5	C	13.317	3.891	0.8	88.8	423
16 \ 2	6	A	13.868	4.659	0.8	86.4	423
17 \ 2	6	B	14.026	4.659	0.8	85.4	423
18 \ 2	6	C	13.947	4.524	0.8	86.1	423
19 \ 2	7	A	11.975	5.289	0.8	87.2	423
20 \ 2	7	B	12.133	5.289	0.8	87.6	423
21 \ 2	7	C	12.054	5.154	0.8	87.9	423
22 \ 3	8	ABC	3.229	4.51	0.8	86.5	200

Cables input data

Study: MA-US-1&2 Yesler to Union Sub Ampacity Study, June 2011
Execution: W&U-5A-14"HP w/insl-18'd,13'h 2500kcmilCu-2@603A@71.2h
Date: 6/6/2011

No	Description	Unit	1	2	3
General cable information					
1	Cable type no		1	2	3
2	Number of cores		1	1	3
3	Voltage	kV	115	13.8	13.8
4	Conductor area	$inch^2$	1.9631	0.7854	0.1318
5	Maximum Steady-State Conductor Temperature	°C	90	105	90
6	Maximum Emergency Conductor Temperature	°C	110	130	110
Construction					
Conductor					
7	Material		copper	copper	copper
8	Resistivity @20°C	uΩ.cm	1.7241	1.7241	1.7241
9	Temperature coefficient	1/K	0.00393	0.00393	0.00393
10	Reciprocal of temperature coefficient of resistance (BETA)	°C	234.5	234.5	234.5
11	Volumetric specific heat (SH)	$J/K.m^3$	3.45	3.45	3.45
12	Construction		4 segments	compressed	compressed
13	Is cable dried?		No	No	No
14	ks (Skin effect coefficient)		0.44	1	1
15	kp (Proximity effect coefficient)		0.37	1	1
16	Diameter	inch	1.77	1.117	0.456
Conductor shield					
17	Is layer present?		Yes	Yes	Yes
18	Thickness	inch	0.05	0.02	0.012
19	Diameter	inch	1.87	1.157	0.48
Insulation					
20	Is layer present?		Yes	Yes	Yes
21	Material		XLPE (unfilled)	EPR	XLPE (unfilled)
22	Thermal resistivity	K.m/w	3.5	5	3.5
23	Dielectric loss factor - (tan δ)		0.001	0.02	0.004
24	Relative permittivity (ε)		2.5	3	2.5
25	Thickness	inch	0.8	0.175	0.175
26	Diameter	inch	3.47	1.507	
Insulation screen					
27	Is layer present?		Yes	Yes	Yes
28	Material		semi-conducting	semi-conducting	semi-conducting
29	Thickness	inch	0.05	0.042	0.06
30	Diameter	inch	3.57	1.591	
Sheath					
31	Is layer present?		Yes	No	Yes
32	Is around each core? (Only for Three core cable)		No		Yes
33	Material		copper		copper
34	Resistivity @20°C	uΩ.cm	1.7241		1.7241
35	Temperature coefficient	1/K	0.00393		0.00393
36	Reciprocal of temperature coefficient of resistance (BETA)	°C	234.5		234.5
37	Volumetric specific heat (SH)	$J/K.m^3$	3.45		3.45
38	Corrugated construction		Corrugated		Non-corrugated
39	Thickness of the corrugated sheath	inch	0.03		
40	Inner radius of the corrugated sheath	inch	1.91		
41	Outer radius of the corrugated sheath	inch	2.035		
42	Thickness	inch	0.25		0.005
43	Diameter	inch	4.07	Yes	

Concentric neutral/Skid wires					
44	Is layer present?		No	copper	No
45	Is around each core? (Only for Three core cable)			1.7241	
46	Material			0.00393	
47	Resistivity @20°C	uΩ.cm		234.5	
48	Temperature coefficient	1/K		3.45	
49	Reciprocal of temperature coefficient of resistance (BETA)	°C			
50	Volumetric specific heat (SH)	J/K.m³		23	
51	Length of lay	inch		Unknown	
52	Number of wires			0.045	
53	Wire gauge			1.681	
54	Thickness	inch			
55	Diameter	inch	Yes	Yes	Yes
Jacket					
56	Is layer present?		3.5	3.5	3.5
57	Material		0.155	0.095	0.105
58	Thermal resistivity	K.m/w	4.38	1.871	2.27851
59	Thickness	inch			
60	Diameter	inch	4.38	1.871	2.27851
Overall cable diameter					
61	Diameter	inch			0.55426
Other useful dimensions for three core cable					
62	Distance between conductor center and cable center	inch			
63	Axial spacing between conductors of the same circuit	inch			

No	Description/Value	Unit	1	2	3
SPECIFIC INSTALLATION DATA					
Bonding					
1	1-CON, sheaths single point bonded, triang. configuration		Yes		
2	1-CON, sheaths bonded ends, triangular configuration			Yes	
3	3-CON, sheath/screen around each core two point bonded				Yes
Loss factor constant					
4	Loss factor constant		0.3	0.3	0.3
Duct construction					
5	PVC duct in concrete or buried		Yes	Yes	
6	Asbestos duct in concrete or buried				Yes
7	Resistivity (RH)		6	6	2
Cables touching					
8	Single conductor cables NOT touching		Yes		
9	Single conductor cables touching			Yes	

No	Symbol	Description	Unit	1	2	3	4	5	6	7	8	9	10	11
Temperature calculations														
1		Cable type no		1	1	1	1	1	1	2	2	2	2	2
2		Circuit no		1	1	1	2	2	2	3	3	3	4	4
3		Phase		A	B	C	A	B	C	A	B	C	A	B
4	θ_c	Conductor temperature	°C	70.3	70.9	71.3	70.5	70.6	71.2	88.3	89.7	88.3	91.5	91.5
5	θ_s	Sheath/Shield temperature	°C	67.3	67.8	68.2	67.4	67.6	68.1	85.6	87	85.7	88.8	88.8
6	θ_j	Armour/Pipe or Jacket temperature	°C	66.9	67.4	67.8	67	67.2	67.7	85	86.4	85	88.2	88.2
7	θ_t	Exterior duct temperature	°C	4	4	4	4.2	4.2	4.1	11.5	11.5	11.5	11.6	11.6
8	θ_A	Ambient temperature	°C	36.4	36.4	36.4	36.4	36.4	36.4	36.4	36.4	36.4	36.4	36.4

No	Symbol	Description	Unit	12	13	14	15	16	17	18	19	20	21	22
Temperature calculations														
1		Cable type no		2	2	2	2	2	2	2	2	2	2	3
2		Circuit no		4	5	5	5	6	6	6	7	7	7	8
3		Phase		C	A	B	C	A	B	C	A	B	C	ABC
4	θ_c	Conductor temperature	°C	90.9	89.9	88.9	88.8	86.4	85.4	86.1	87.2	87.6	87.9	86.5
5	θ_s	Sheath/Shield temperature	°C	88.3	87.3	86.3	86.2	83.8	82.8	83.5	84.6	84.9	85.3	81.9
6	θ_j	Armour/Pipe or Jacket temperature	°C	87.6	86.6	85.6	85.5	83.2	82.2	82.9	83.9	84.3	84.7	79.7
7	θ_t	Exterior duct temperature	°C	11.6	11.4	11.4	11.4	11.5	11.5	11.5	12	12	12	13.3
8	θ_A	Ambient temperature	°C	36.4	36.4	36.4	36.4	36.4	36.4	36.4	36.4	36.4	36.4	36.4

Cable type no: 1
Cable type: EXTRUDED
Cable ID: 115C2.SMX5
Cable title: 115KV 2500 KCMIL CU XLPE 800mil Southwire

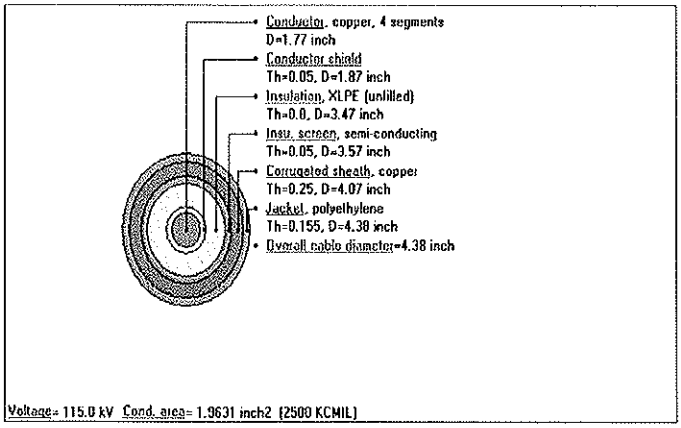

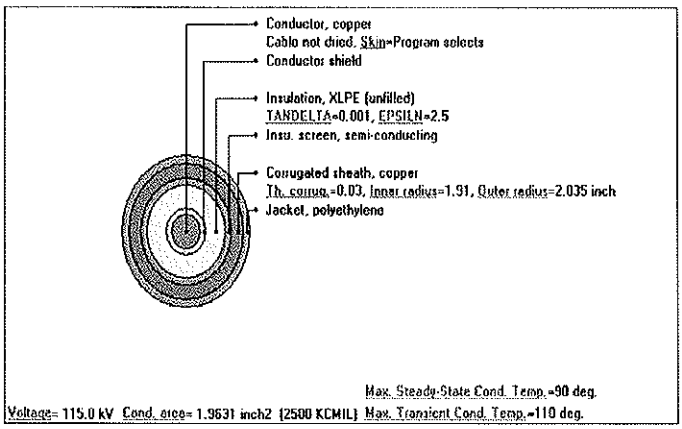

Cable type no: 2
Cable type: OTHER
Cable ID: 015C1.0ME3
Cable title: 15kV 1000KCMIL Cu 175 MIL EPR 1/C SCL Alaskan Way 623670

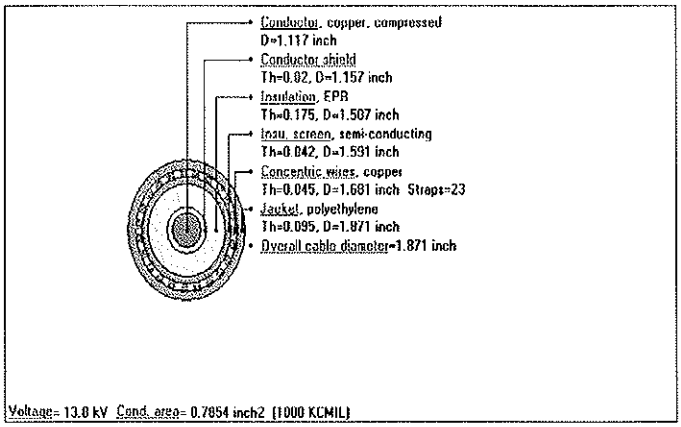

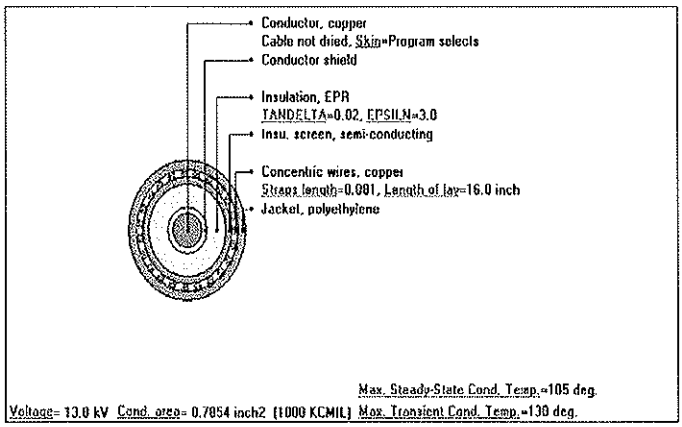

Cable type no: 3
Cable type: EXTRUDED
Cable ID: 015C3/0 X
Cable title: 15kV 3/0 Cu 175 MIL XLPE 3/C SCL Alaska Way 613526

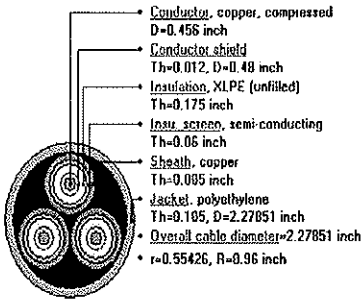

Voltage= 13.0 kV Cond. area= 0.1318 inch2 (160 KCMIL)

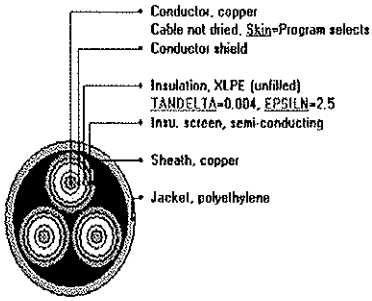

Max. Steady-State Cond. Temp.=90 deg.
Voltage= 13.0 kV Cond. area= 0.1318 inch2 (160 KCMIL) Max. Transient Cond. Temp.=110 deg.

Summary Results

Study: MA-US-1&2 Yesler to Union Sub Ampacity Study, June 2011
Execution: W&U-58-14"HP w/o-18'd,13'h 2500kcmilCu-2@603A@89.5h
Date: 6/6/2011
Frequency: 60 Hz
Conductor Resistances: IEC-228
Fraction of conductor current returning through sheath for single phase cables: 1

Installation Type: Multiple Duct Banks Backfills

Parameter						Unit	Value
Ambient Soil Temperature at Installation Depth						°C	36.4
Thermal Resistivity of Native Soil						°C.m/W	1
Layers		**Dimensions [ft]**				**Type**	**Thermal Resistivity [°C.m/W]**
No.	**Name**	**X Center**	**Y Center**	**Width**	**Height**		
1	DB 4X2	13	20.032	1.854	4.063	Standard ductbank	0.6
2	Backfill	13	11.881	1.998	12.254	Backfill	0.75
3	DB 3X4	13	4.613	2.857	2.226	Standard ductbank	0.6
4	DB 6X2	3.5	5.792	1.417	3.583	Standard ductbank	0.6
5	Backfill	11.498	20.026	1.001	3.999	Backfill	0.75
6	Backfill	14.482	20.026	1.073	3.999	Backfill	0.75
7	Backfill	11.466	11.898	1.001	12.254	Backfill	0.75
8	Backfill	14.514	11.898	1.001	12.254	Backfill	0.75
Heat Source Type							Temperature
Heat Source Temperature						°C	185
Heat Source X Center						ft	0
Heat Source Y Center						ft	6
Heat Source Diameter						inch	14
Heat Source Insulation Diameter						inch	24
Heat Source Insulation Thermal Resistivity						°C.m/W	78.084

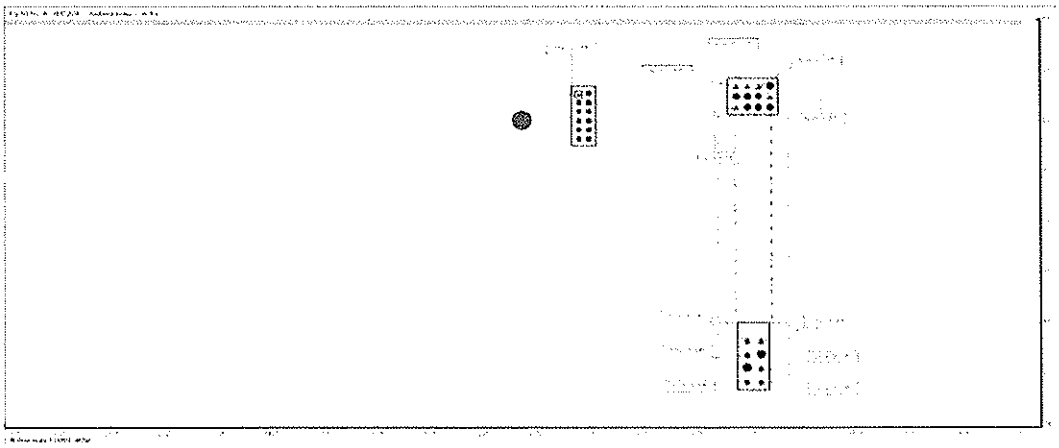

Summary Results

Solution converged

Cable\Cable type no	Circuit	Phase	Location		Load Factor	Temperature	Ampacity
			X[ft]	Y[ft]	[p.u.]	[°C]	[A]
1\1	1	A	13.401	19.159	0.8	88.1	603
2\1	1	B	12.599	19.159	0.8	89.5	603
3\1	1	C	12.599	19.961	0.8	89.6	603
4\1	2	A	12.599	21.565	0.8	88.4	603
5\1	2	B	13.401	21.565	0.8	87.9	603
6\1	2	C	13.401	20.763	0.8	88.6	603
7\2	3	A	11.975	4.026	0.8	99.4	423
8\2	3	B	12.133	4.026	0.8	100.6	423
9\2	3	C	12.054	3.891	0.8	99.2	423
10\2	4	A	12.605	4.026	0.8	101.9	423
11\2	4	B	12.762	4.026	0.8	101.8	423
12\2	4	C	12.684	3.891	0.8	101	423
13\2	5	A	13.238	4.026	0.8	99.6	423
14\2	5	B	13.392	4.026	0.8	98.4	423
15\2	5	C	13.317	3.891	0.8	98	423
16\2	6	A	13.868	4.659	0.8	96.3	423
17\2	6	B	14.026	4.659	0.8	95.2	423
18\2	6	C	13.947	4.524	0.8	95.9	423
19\2	7	A	11.975	5.289	0.8	100.7	423
20\2	7	B	12.133	5.289	0.8	100.8	423
21\2	7	C	12.054	5.154	0.8	101	423
22\3	8	ABC	3.229	4.51	0.8	135.1	200

Cables input data

Study: MA-US-1&2 Yesler to Union Sub Ampacity Study, June 2011
Execution: W&U-5B-14"HP w/o-18'd,13'h 2500kcmilCu-2@603A@89.5h
Date: 6/6/2011

No	Description	Unit	1	2	3
General cable information					
1	Cable type no		1	2	3
2	Number of cores		1	1	3
3	Voltage	kV	115	13.8	13.8
4	Conductor area	$inch^2$	1.9631	0.7854	0.1318
5	Maximum Steady-State Conductor Temperature	°C	90	105	90
6	Maximum Emergency Conductor Temperature	°C	110	130	110
Construction					
Conductor					
7	Material		copper	copper	copper
8	Resistivity @20°C	uΩ.cm	1.7241	1.7241	1.7241
9	Temperature coefficient	1/K	0.00393	0.00393	0.00393
10	Reciprocal of temperature coefficient of resistance (BETA)	°C	234.5	234.5	234.5
11	Volumetric specific heat (SH)	$J/K.m^3$	3.45	3.45	3.45
12	Construction		4 segments	compressed	compressed
13	Is cable dried?		No	No	No
14	ks (Skin effect coefficient)		0.44	1	1
15	kp (Proximity effect coefficient)		0.37	1	1
16	Diameter	inch	1.77	1.117	0.456
Conductor shield					
17	Is layer present?		Yes	Yes	Yes
18	Thickness	inch	0.05	0.02	0.012
19	Diameter	inch	1.87	1.157	0.48
Insulation					
20	Is layer present?		Yes	Yes	Yes
21	Material		XLPE (unfilled)	EPR	XLPE (unfilled)
22	Thermal resistivity	K.m/w	3.5	5	3.5
23	Dielectric loss factor - (tan δ)		0.001	0.02	0.004
24	Relative permittivity (ε)		2.5	3	2.5
25	Thickness	inch	0.8	0.175	0.175
26	Diameter	inch	3.47	1.507	
Insulation screen					
27	Is layer present?		Yes	Yes	Yes
28	Material		semi-conducting	semi-conducting	semi-conducting
29	Thickness	inch	0.05	0.042	0.06
30	Diameter	inch	3.57	1.591	
Sheath					
31	Is layer present?		Yes	No	Yes
32	Is around each core? (Only for Three core cable)		No		Yes
33	Material		copper		copper
34	Resistivity @20°C	uΩ.cm	1.7241		1.7241
35	Temperature coefficient	1/K	0.00393		0.00393
36	Reciprocal of temperature coefficient of resistance (BETA)	°C	234.5		234.5
37	Volumetric specific heat (SH)	$J/K.m^3$	3.45		3.45
38	Corrugated construction		Corrugated		Non-corrugated
39	Thickness of the corrugated sheath	inch	0.03		
40	Inner radius of the corrugated sheath	inch	1.91		
41	Outer radius of the corrugated sheath	inch	2.035		
42	Thickness	inch	0.25		0.005
43	Diameter	inch	4.07	Yes	

Concentric neutral/Skid wires					
44	Is layer present?		No	copper	No
45	Is around each core? (Only for Three core cable)			1.7241	
46	Material			0.00393	
47	Resistivity @20°C	uΩ.cm		234.5	
48	Temperature coefficient	1/K		3.45	
49	Reciprocal of temperature coefficient of resistance (BETA)	°C			
50	Volumetric specific heat (SH)	J/K.m³		23	
51	Length of lay	inch		Unknown	
52	Number of wires			0.045	
53	Wire gauge			1.681	
54	Thickness	inch			
55	Diameter	inch	Yes	Yes	Yes
Jacket					
56	Is layer present?		3.5	3.5	3.5
57	Material		0.155	0.095	0.105
58	Thermal resistivity	K.m/w	4.38	1.871	2.27851
59	Thickness	inch			
60	Diameter	inch	4.38	1.871	2.27851
Overall cable diameter					
61	Diameter	inch			0.55426
Other useful dimensions for three core cable					
62	Distance between conductor center and cable center	inch			
63	Axial spacing between conductors of the same circuit	inch			

No	Description/Value	Unit	1	2	3
SPECIFIC INSTALLATION DATA					
Bonding					
1	1-CON, sheaths single point bonded, triang. configuration		Yes		
2	1-CON, sheaths bonded ends, triangular configuration			Yes	
3	3-CON, sheath/screen around each core two point bonded				Yes
Loss factor constant					
4	Loss factor constant		0.3	0.3	0.3
Duct construction					
5	PVC duct in concrete or buried		Yes	Yes	
6	Asbestos duct in concrete or buried				Yes
7	Resistivity (RH)		6	6	2
Cables touching					
8	Single conductor cables NOT touching		Yes		
9	Single conductor cables touching			Yes	

No	Symbol	Description	Unit	1	2	3	4	5	6	7	8	9	10	11
Temperature calculations														
1		Cable type no		1	1	1	1	1	1	2	2	2	2	2
2		Circuit no		1	1	1	2	2	2	3	3	3	4	4
3		Phase		A	B	C	A	B	C	A	B	C	A	B
4	θ_c	Conductor temperature	°C	88.1	89.5	89.6	88.4	87.9	88.6	99.4	100.6	99.2	101.9	101.8
5	θ_s	Sheath/Shield temperature	°C	84.9	86.2	86.3	85.2	84.7	85.3	96.7	97.9	96.4	99.2	99
6	θ_j	Armour/Pipe or Jacket temperature	°C	84.5	85.8	85.9	84.7	84.3	84.9	96.1	97.2	95.8	98.5	98.4
7	θ_x	Exterior duct temperature	°C	4	4	4	4.2	4.2	4.1	11.6	11.6	11.6	11.7	11.7
8	θ_a	Ambient temperature	°C	36.4	36.4	36.4	36.4	36.4	36.4	36.4	36.4	36.4	36.4	36.4

No	Symbol	Description	Unit	12	13	14	15	16	17	18	19	20	21	22
Temperature calculations														
1		Cable type no		2	2	2	2	2	2	2	2	2	2	3
2		Circuit no		4	5	5	5	6	6	6	7	7	7	8
3		Phase		C	A	B	C	A	B	C	A	B	C	ABC
4	θ_c	Conductor temperature	°C	101	99.6	98.4	98	96.3	95.2	95.9	100.7	100.8	101	135.1
5	θ_s	Sheath/Shield temperature	°C	98.2	96.9	95.7	95.3	93.6	92.5	93.2	98	98	98.3	129.8
6	θ_j	Armour/Pipe or Jacket temperature	°C	97.6	96.2	95	94.6	93	91.8	92.6	97.3	97.4	97.7	127.3
7	θ_x	Exterior duct temperature	°C	11.7	11.5	11.5	11.5	11.6	11.6	11.6	12.1	12.1	12.1	14.9
8	θ_a	Ambient temperature	°C	36.4	36.4	36.4	36.4	36.4	36.4	36.4	36.4	36.4	36.4	36.4

Cable type no: 1
Cable type: EXTRUDED
Cable ID: 115C2.5MX5
Cable title: 115KV 2500 KCMIL CU XLPE 800mil Southwire

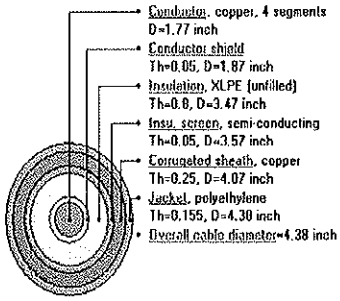

Voltage= 115.0 kV Cond. area= 1.9631 inch2 (2500 KCMIL)

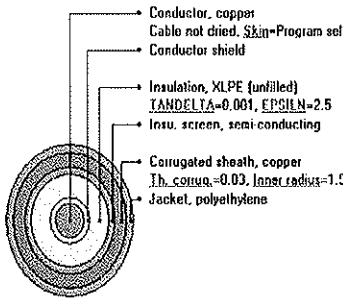

Max. Steady-State Cond. Temp.=90 deg.
Voltage= 115.0 kV Cond. area= 1.9631 inch2 (2500 KCMIL) Max. Transient Cond. Temp.=110 deg.

Cable type no: 2
Cable type: OTHER
Cable ID: 015C1.0ME3
Cable title: 15kV 1000KCMIL Cu 175 MIL EPR 1/C SCL Alaskan Way 623670

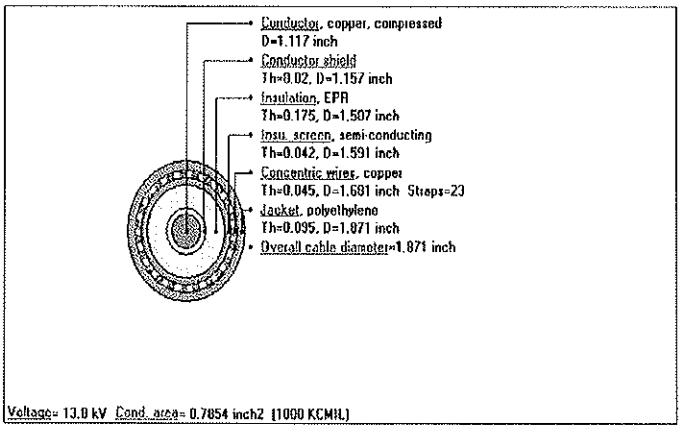

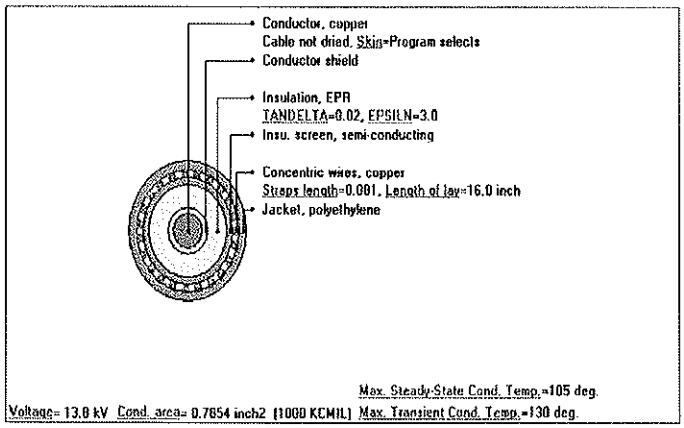

Cable type no: 3
Cable type: EXTRUDED
Cable ID: 015C3/0 X
Cable title: 15kV 3/0 Cu 175 MIL XLPE 3/C SCL Alaska Way 613526

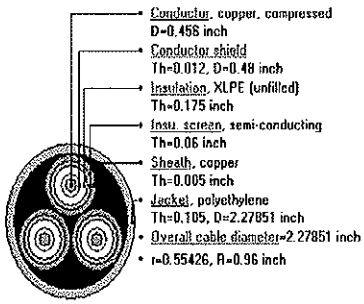

Voltage= 13.8 kV Cond. area= 0.1318 inch2 (168 KCMIL)

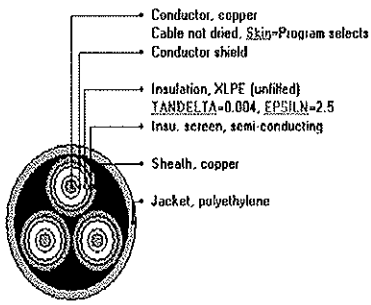

Max. Steady-State Cond. Temp.=90 deg.
Voltage= 13.8 kV Cond. area= 0.1318 inch2 (168 KCMIL) Max. Transient Cond. Temp.=110 deg.

Summary Results

Study: MA-US-1&2 Yesler to Union Sub Ampacity Study, June 2011
Execution: W&U-5C-14"HP w/insl-18'd,13'h 2500kcmilCu-2@603A@76.7h
Date: 6/10/2011
Frequency: 60 Hz
Conductor Resistances: IEC-228
Fraction of conductor current returning through sheath for single phase cables: 1

Installation Type: Multiple Duct Banks Backfills

Parameter						Unit	Value
Ambient Soil Temperature at Installation Depth						°C	36.4
Thermal Resistivity of Native Soil						°C.m/W	1
Layers		Dimensions [ft]				Type	Thermal Resistivity [°C.m/W]
No.	Name	X Center	Y Center	Width	Height		
1	DB 4X2	13	20.032	1.854	4.063	Standard ductbank	0.6
2	Backfill	13	11.881	1.998	12.228	Backfill	0.75
3	DB 3X4	13	4.613	2.857	2.226	Standard ductbank	0.6
4	DB 6X2	3.5	5.792	1.417	3.583	Standard ductbank	0.6
5	Backfill	11.83	14.013	0.338	16.024	Backfill	8.333
6	Backfill	14.172	14.013	0.335	16.024	Backfill	8.333
Heat Source Type							Temperature
Heat Source Temperature						°C	185
Heat Source X Center						ft	0
Heat Source Y Center						ft	6
Heat Source Diameter						inch	14
Heat Source Insulation Diameter						inch	24
Heat Source Insulation Thermal Resistivity						°C.m/W	78.084

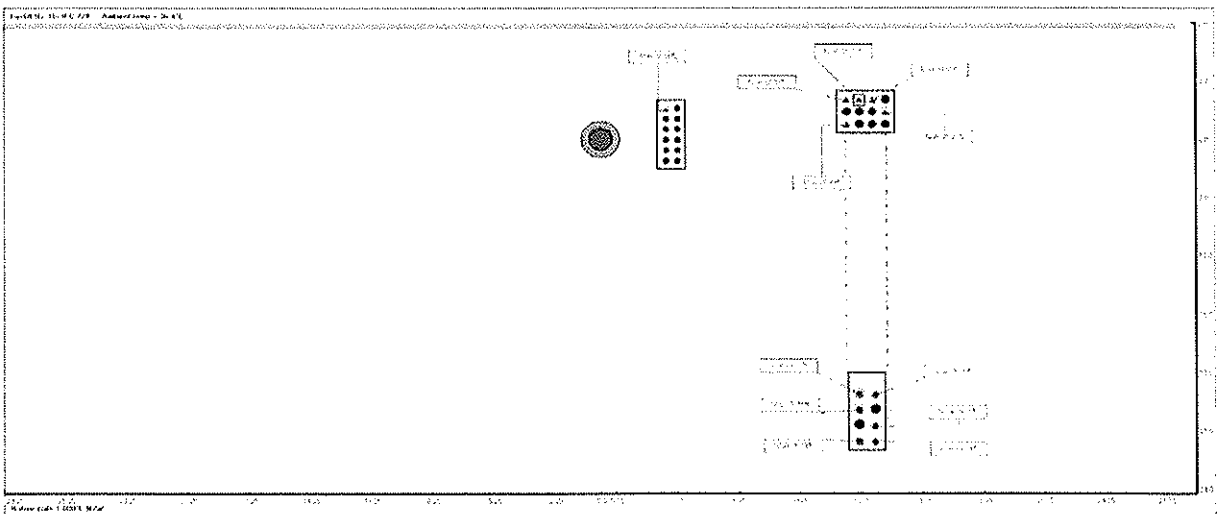

Summary Results

Solution converged

Cable\Cable type no	Circuit	Phase	Location		Load Factor	Temperature	Ampacity
			X[ft]	Y[ft]	[p.u.]	[°C]	[A]
1\1	1	A	13.401	19.159	0.8	75.8	603
2\1	1	B	12.599	19.159	0.8	76.6	603
3\1	1	C	12.599	19.961	0.8	76.7	603
4\1	2	A	12.599	21.565	0.8	73.9	603
5\1	2	B	13.401	21.565	0.8	74.1	603
6\1	2	C	13.401	20.763	0.8	76.1	603
7\2	3	A	11.975	4.026	0.8	88.9	423
8\2	3	B	12.133	4.026	0.8	90.3	423
9\2	3	C	12.054	3.891	0.8	89	423
10\2	4	A	12.605	4.026	0.8	92.1	423
11\2	4	B	12.762	4.026	0.8	92.3	423
12\2	4	C	12.684	3.891	0.8	91.5	423
13\2	5	A	13.238	4.026	0.8	90.7	423
14\2	5	B	13.392	4.026	0.8	89.6	423
15\2	5	C	13.317	3.891	0.8	89.5	423
16\2	6	A	13.868	4.659	0.8	87.2	423
17\2	6	B	14.026	4.659	0.8	86.2	423
18\2	6	C	13.947	4.524	0.8	87	423
19\2	7	A	11.975	5.289	0.8	88.5	423
20\2	7	B	12.133	5.289	0.8	88.9	423
21\2	7	C	12.054	5.154	0.8	89.2	423
22\3	8	ABC	3.229	4.51	0.8	87.8	200

Cables input data

Study: MA-US-1&2 Yesler to Union Sub Ampacity Study, June 2011
Execution: W&U-SC-14"HP w/insl-18'd,13'h 2500kcmilCu-2@603A@76.7h
Date: 6/10/2011

No	Description	Unit	1	2	3
General cable information					
1	Cable type no		1	2	3
2	Number of cores		1	1	3
3	Voltage	kV	115	13.8	13.8
4	Conductor area	$inch^2$	1.9631	0.7854	0.1318
5	Maximum Steady-State Conductor Temperature	°C	90	105	90
6	Maximum Emergency Conductor Temperature	°C	110	130	110
Construction					
Conductor					
7	Material		copper	copper	copper
8	Resistivity @20°C	uΩ.cm	1.7241	1.7241	1.7241
9	Temperature coefficient	1/K	0.00393	0.00393	0.00393
10	Reciprocal of temperature coefficient of resistance (BETA)	°C	234.5	234.5	234.5
11	Volumetric specific heat (SH)	$J/K.m^3$	3.45	3.45	3.45
12	Construction		4 segments	compressed	compressed
13	Is cable dried?		No	No	No
14	ks (Skin effect coefficient)		0.44	1	1
15	kp (Proximity effect coefficient)		0.37	1	1
16	Diameter	inch	1.77	1.117	0.456
Conductor shield					
17	Is layer present?		Yes	Yes	Yes
18	Thickness	inch	0.05	0.02	0.012
19	Diameter	inch	1.87	1.157	0.48
Insulation					
20	Is layer present?		Yes	Yes	Yes
21	Material		XLPE (unfilled)	EPR	XLPE (unfilled)
22	Thermal resistivity	K.m/w	3.5	5	3.5
23	Dielectric loss factor - (tan δ)		0.001	0.02	0.004
24	Relative permittivity (ε)		2.5	3	2.5
25	Thickness	inch	0.8	0.175	0.175
26	Diameter	inch	3.47	1.507	
Insulation screen					
27	Is layer present?		Yes	Yes	Yes
28	Material		semi-conducting	semi-conducting	semi-conducting
29	Thickness	inch	0.05	0.042	0.06
30	Diameter	inch	3.57	1.591	
Sheath					
31	Is layer present?		Yes	No	Yes
32	Is around each core? (Only for Three core cable)		No		Yes
33	Material		copper		copper
34	Resistivity @20°C	uΩ.cm	1.7241		1.7241
35	Temperature coefficient	1/K	0.00393		0.00393
36	Reciprocal of temperature coefficient of resistance (BETA)	°C	234.5		234.5
37	Volumetric specific heat (SH)	$J/K.m^3$	3.45		3.45
38	Corrugated construction		Corrugated		Non-corrugated
39	Thickness of the corrugated sheath	inch	0.03		
40	Inner radius of the corrugated sheath	inch	1.91		
41	Outer radius of the corrugated sheath	inch	2.035		
42	Thickness	inch	0.25		0.005
43	Diameter	inch	4.07	Yes	

Concentric neutral/Skid wires					
44	Is layer present?		No	copper	No
45	Is around each core? (Only for Three core cable)			1.7241	
46	Material			0.00393	
47	Resistivity @20°C	uΩ.cm		234.5	
48	Temperature coefficient	1/K		3.45	
49	Reciprocal of temperature coefficient of resistance (BETA)	°C			
50	Volumetric specific heat (SH)	J/K.m³		23	
51	Length of lay	inch		Unknown	
52	Number of wires			0.045	
53	Wire gauge			1.681	
54	Thickness	inch			
55	Diameter	inch	Yes	Yes	Yes
Jacket					
56	Is layer present?		3.5	3.5	3.5
57	Material		0.155	0.095	0.105
58	Thermal resistivity	K.m/w	4.38	1.871	2.27851
59	Thickness	inch			
60	Diameter	inch	4.38	1.871	2.27851
Overall cable diameter					
61	Diameter	inch			0.55426
Other useful dimensions for three core cable					
62	Distance between conductor center and cable center	inch			
63	Axial spacing between conductors of the same circuit	inch			

No	Description/Value	Unit	1	2	3
SPECIFIC INSTALLATION DATA					
Bonding					
1	1-CON, sheaths single point bonded, triang. configuration		Yes		
2	1-CON, sheaths bonded ends, triangular configuration			Yes	
3	3-CON, sheath/screen around each core two point bonded				Yes
Loss factor constant					
4	Loss factor constant		0.3	0.3	0.3
Duct construction					
5	PVC duct in concrete or buried		Yes	Yes	
6	Asbestos duct in concrete or buried				Yes
7	Resistivity (RH)		6	6	2
Cables touching					
8	Single conductor cables NOT touching		Yes		
9	Single conductor cables touching			Yes	

No	Symbol	Description	Unit	1	2	3	4	5	6	7	8	9	10	11
Temperature calculations														
1		Cable type no		1	1	1	1	1	1	2	2	2	2	2
2		Circuit no		1	1	1	2	2	2	3	3	3	4	4
3		Phase		A	B	C	A	B	C	A	B	C	A	B
4	θ_c	Conductor temperature	°C	75.8	76.6	76.7	73.9	74.1	76.1	88.9	90.3	89	92.1	92.3
5	θ_s	Sheath/Shield temperature	°C	72.7	73.4	73.6	70.8	71	73	86.3	87.7	86.4	89.5	89.6
6	θ_j	Armour/Pipe or Jacket temperature	°C	72.3	73	73.2	70.4	70.6	72.5	85.6	87	85.7	88.8	89
7	θ_e	Exterior duct temperature	°C	4.8	4.8	4.8	4.7	4.7	4.8	11.6	11.6	11.6	11.7	11.7
8	θ_a	Ambient temperature	°C	36.4	36.4	36.4	36.4	36.4	36.4	36.4	36.4	36.4	36.4	36.4

No	Symbol	Description	Unit	12	13	14	15	16	17	18	19	20	21	22
Temperature calculations														
1		Cable type no		2	2	2	2	2	2	2	2	2	2	3
2		Circuit no		4	5	5	5	6	6	6	7	7	7	8
3		Phase		C	A	B	C	A	B	C	A	B	C	ABC
4	θ_c	Conductor temperature	°C	91.5	90.7	89.6	89.5	87.2	86.2	87	88.5	88.9	89.2	87.8
5	θ_s	Sheath/Shield temperature	°C	88.9	88	87	86.8	84.6	83.6	84.4	85.9	86.2	86.6	83.1
6	θ_j	Armour/Pipe or Jacket temperature	°C	88.2	87.4	86.3	86.2	83.9	82.9	83.7	85.2	85.6	85.9	80.9
7	θ_e	Exterior duct temperature	°C	11.7	11.5	11.5	11.5	11.7	11.7	11.7	12.3	12.3	12.3	13.4
8	θ_a	Ambient temperature	°C	36.4	36.4	36.4	36.4	36.4	36.4	36.4	36.4	36.4	36.4	36.4

Cable type no: 1
Cable type: EXTRUDED
Cable ID: 115C2.5MX5
Cable title: 115KV 2500 KCMIL CU XLPE 800mil Southwire

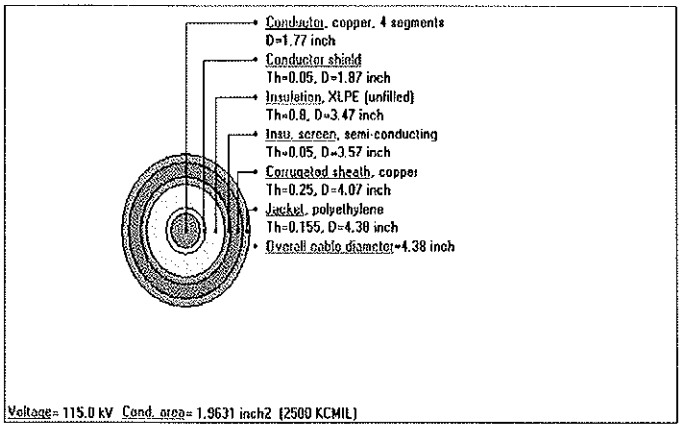

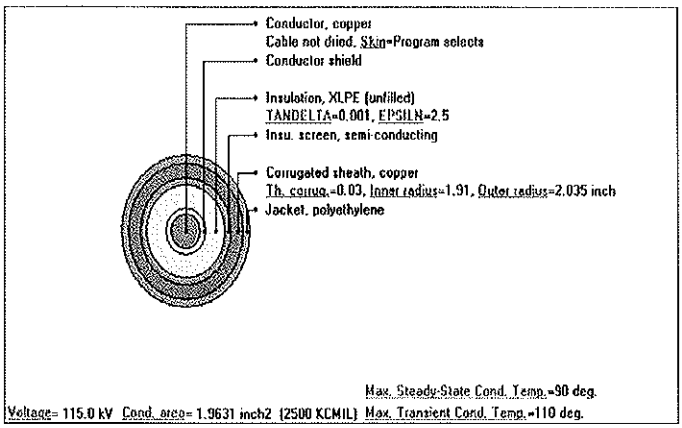

Cable type no: 2
Cable type: OTHER
Cable ID: 015C1.0ME3
Cable title: 15kV 1000KCMIL Cu 175 MIL EPR 1/C SCL Alaskan Way 623670

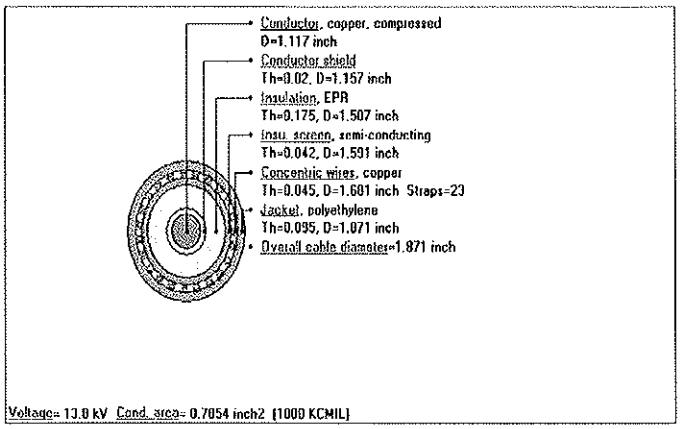

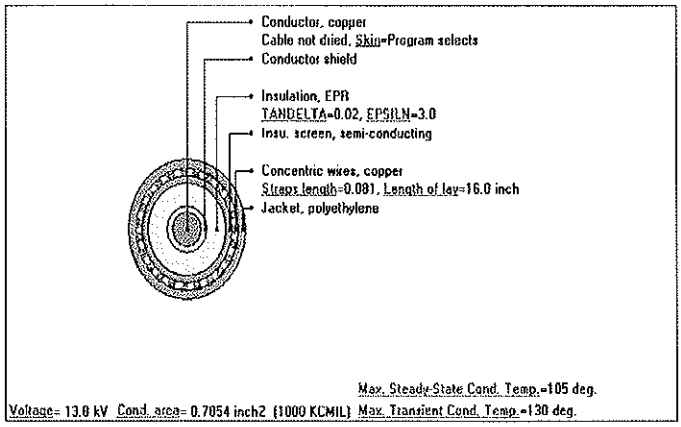

Cable type no: 3
Cable type: EXTRUDED
Cable ID: 015C3/0 X
Cable title: 15kV 3/0 Cu 175 MIL XLPE 3/C SCL Alaska Way 613526

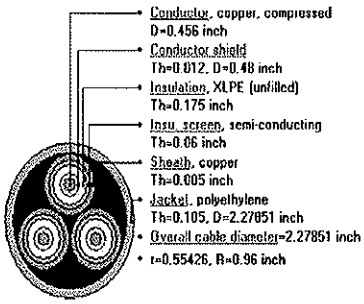

Voltage= 13.0 kV Cond. area= 0.1310 inch2 (168 KCMIL)

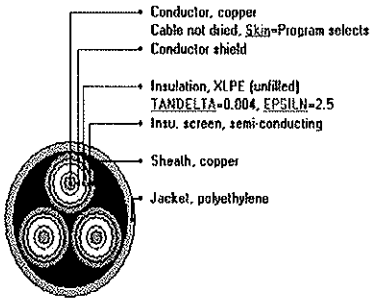

Max. Steady-State Cond. Temp.=90 deg.
Voltage= 13.0 kV Cond. area= 0.1310 inch2 (168 KCMIL) Max. Transient Cond. Temp.=110 deg.

Summary Results

Study: MA-US-1&2 Yesler to Union Sub Ampacity Study, June 2011
Execution: Mar1A-4"HP w insl-5.5'd, 2500kcmil Cu-603A@42.0,603A@41.9
Date: 6/6/2011
Frequency: 60 Hz
Conductor Resistances: IEC-228
Fraction of conductor current returning through sheath for single phase cables: 1

Installation Type: Multiple Duct Banks Backfills

Parameter						Unit	Value
Ambient Soil Temperature at Installation Depth						°C	18
Thermal Resistivity of Native Soil						°C.m/W	1
Layers		Dimensions [ft]				Type	Thermal Resistivity [°C.m/W]
No.	Name	X Center	Y Center	Width	Height		
1	DB 2X4	0	9.729	3.458	2.458	Standard ductbank	0.6
2	Backfill	0	4.245	3.497	8.501	Backfill	0.75
Heat Source Type							Temperature
Heat Source Temperature						°C	185
Heat Source X Center						ft	0
Heat Source Y Center						ft	6.5
Heat Source Diameter						inch	4.5
Heat Source Insulation Diameter						inch	16.5
Heat Source Insulation Thermal Resistivity						°C.m/W	78.084

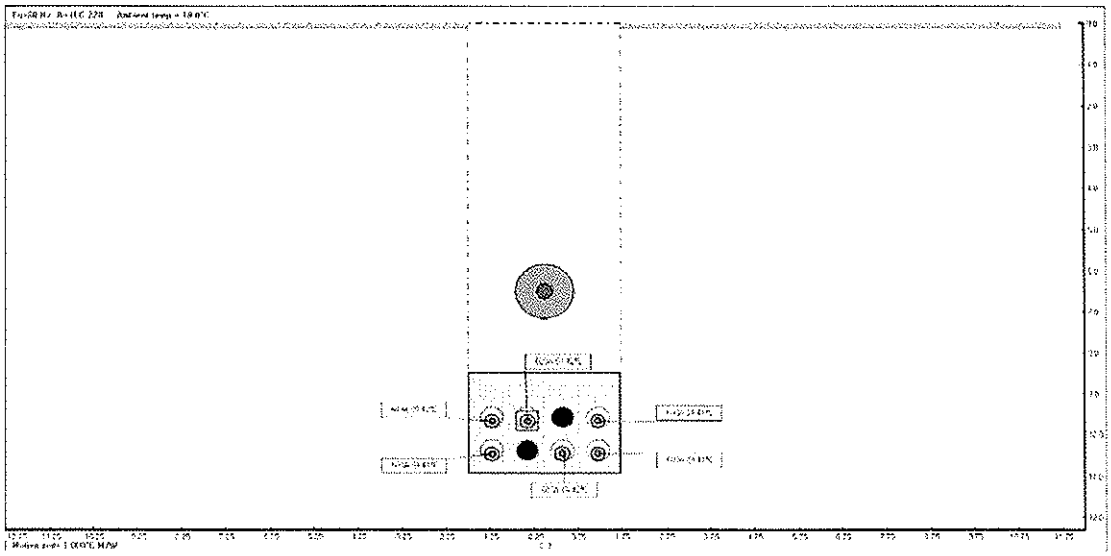

Summary Results

Solution converged

Cable\Cable type no	Circuit	Phase	Location		Load Factor	Temperature	Ampacity
			X[ft]	Y[ft]	[p.u.]	[°C]	[A]
1\1	1	A	-1.203	10.461	0.8	41.2	603
2\1	1	B	-1.203	9.659	0.8	41.5	603
3\1	1	C	-0.401	9.659	0.8	42	603
4\1	2	A	0.401	10.461	0.8	41.9	603
5\1	2	B	1.203	10.461	0.8	41.4	603
6\1	2	C	1.203	9.659	0.8	41.3	603

Cables input data

Study: MA-US-1&2 Yesler to Union Sub Ampacity Study, June 2011
Execution: Mar1A-4"HP w insl-5.5'd, 2500kcmil Cu-603A@42.0,603A@41.9
Date: 6/6/2011

No	Description	Unit	1
General cable information			
1	Cable type no		1
2	Number of cores		1
3	Voltage	kV	115
4	Conductor area	$inch^2$	1.9631
5	Maximum Steady-State Conductor Temperature	°C	90
6	Maximum Emergency Conductor Temperature	°C	110
Construction			
Conductor			
7	Material		copper
8	Resistivity @20°C	uΩ.cm	1.7241
9	Temperature coefficient	1/K	0.00393
10	Reciprocal of temperature coefficient of resistance (BETA)	°C	234.5
11	Volumetric specific heat (SH)	$J/K.m^3$	3.45
12	Construction		4 segments
13	Is cable dried?		No
14	ks (Skin effect coefficient)		0.44
15	kp (Proximity effect coefficient)		0.37
16	Diameter	inch	1.77
Conductor shield			
17	Is layer present?		Yes
18	Thickness	inch	0.05
19	Diameter	inch	1.87
Insulation			
20	Is layer present?		Yes
21	Material		XLPE (unfilled)
22	Thermal resistivity	K.m/w	3.5
23	Dielectric loss factor - (tan δ)		0.001
24	Relative permittivity (ε)		2.5
25	Thickness	inch	0.8
26	Diameter	inch	3.47
Insulation screen			
27	Is layer present?		Yes
28	Material		semi-conducting
29	Thickness	inch	0.05
30	Diameter	inch	3.57

Sheath

31	Is layer present?		Yes
32	Is around each core? (Only for Three core cable)		No
33	Material		copper
34	Resistivity @20°C	uΩ.cm	1.7241
35	Temperature coefficient	1/K	0.00393
36	Reciprocal of temperature coefficient of resistance (BETA)	°C	234.5
37	Volumetric specific heat (SH)	$J/K.m^3$	3.45
38	Corrugated construction		Corrugated
39	Thickness of the corrugated sheath	inch	0.03
40	Inner radius of the corrugated sheath	inch	1.91
41	Outer radius of the corrugated sheath	inch	2.035
42	Thickness	inch	0.25
43	Diameter	inch	4.07

Jacket

44	Is layer present?		Yes
45	Material		polyethylene
46	Thermal resistivity	K.m/w	3.5
47	Thickness	inch	0.155
48	Diameter	inch	4.38

Overall cable diameter

49	Diameter	inch	4.38

No	Description/Value	Unit	1
SPECIFIC INSTALLATION DATA			
Bonding			
1	1-CON, sheaths single point bonded, triang. configuration		Yes
Loss factor constant			
2	Loss factor constant		0.3
Duct construction			
3	PVC duct in concrete or buried		Yes
4	Resistivity (RH)		6
Cables touching			
5	Single conductor cables NOT touching		Yes

No	Symbol	Description	Unit	1	2	3	4	5	6
Temperature calculations									
1		Cable type no		1	1	1	1	1	1
2		Circuit no		1	1	1	2	2	2
3		Phase		A	B	C	A	B	C
4	θ_c	Conductor temperature	°C	41.2	41.5	42	41.9	41.4	41.3
5	θ_i	Sheath/Shield temperature	°C	38.4	38.7	39.2	39.1	38.6	38.4
6	θ_j	Armour/Pipe or Jacket temperature	°C	38	38.3	38.8	38.7	38.2	38.1
7	θ_s	Exterior duct temperature	°C	3.2	3.1	3	3.2	3.3	3.1
8	θ_a	Ambient temperature	°C	18	18	18	18	18	18

Cable type no: 1
Cable type: EXTRUDED
Cable ID: 115C2.5MX5
Cable title: 115KV 2500 KCMIL CU XLPE 800mil Southwire

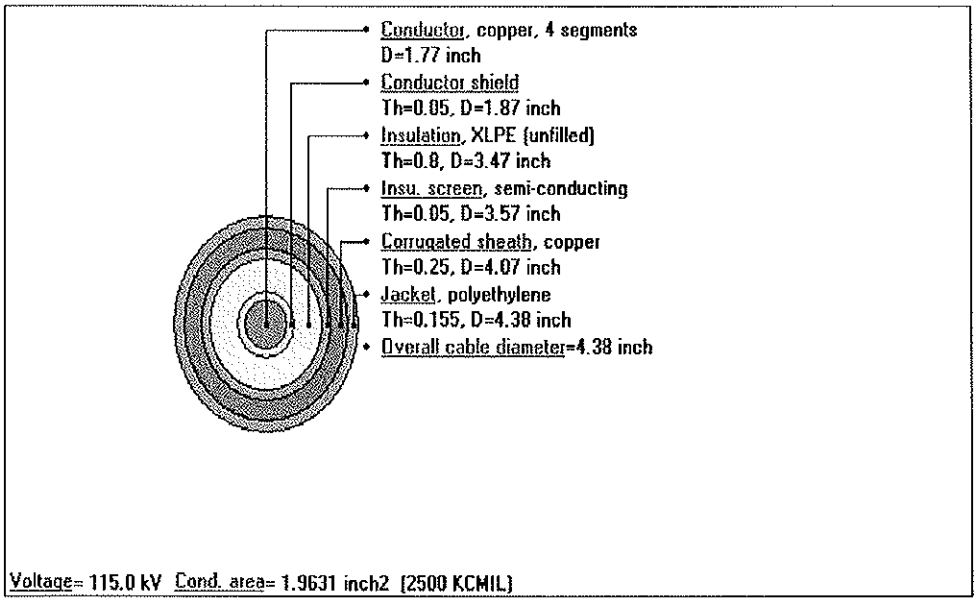

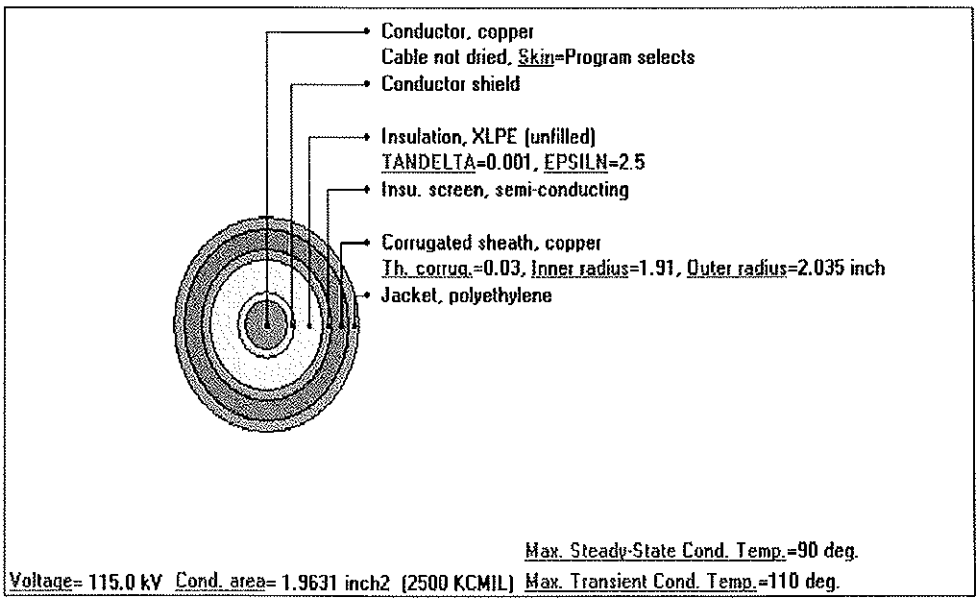

Summary Results

Study: MA-US-1&2 Yesler to Union Sub Ampacity Study, June 2011
Execution: Mar1B-4"HP w/o insl-5.5'd, 2500kcmil Cu-603A@76.0,603A@70.0
Date: 6/6/2011
Frequency: 60 Hz
Conductor Resistances: IEC-228
Fraction of conductor current returning through sheath for single phase cables: 1

Installation Type: Multiple Duct Banks Backfills

Parameter						Unit	Value
Ambient Soil Temperature at Installation Depth						°C	18
Thermal Resistivity of Native Soil						°C.m/W	1
Layers		Dimensions [ft]				Type	Thermal Resistivity [°C.m/W]
No.	Name	X Center	Y Center	Width	Height		
1	DB 2X4	0	9.729	3.458	2.458	Standard ductbank	0.6
2	Backfill	0	4.245	3.497	8.501	Backfill	0.75
Heat Source Type							Temperature
Heat Source Temperature						°C	185
Heat Source X Center						ft	-6.73
Heat Source Y Center						ft	6.5
Heat Source Diameter						inch	4.5
Heat Source Insulation Diameter						inch	16.5
Heat Source Insulation Thermal Resistivity						°C.m/W	54.692

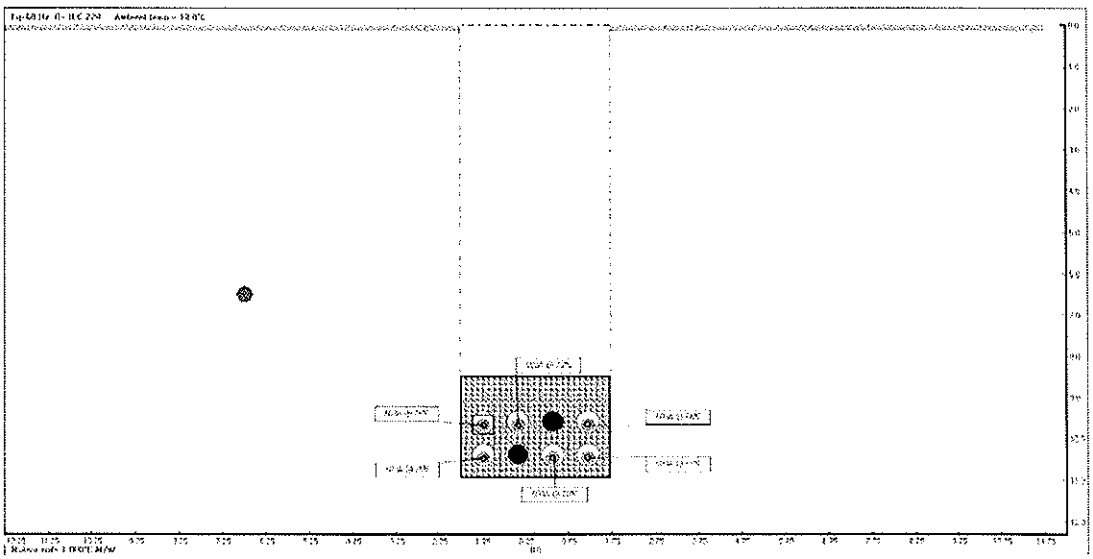

Summary Results

Solution converged

Cable\Cable type no	Circuit	Phase	Location		Load Factor	Temperature	Ampacity
			X[ft]	Y[ft]	[p.u.]	[°C]	[A]
1\1	1	A	-1.203	10.461	0.8	75.4	603
2\1	1	B	-1.203	9.659	0.8	76	603
3\1	1	C	-0.401	9.659	0.8	72.7	603
4\1	2	A	0.401	10.461	0.8	70	603
5\1	2	B	1.203	10.461	0.8	66.9	603
6\1	2	C	1.203	9.659	0.8	66.1	603

Cables input data

Study: MA-US-1&2 Yesler to Union Sub Ampacity Study, June 2011
Execution: Mar1B-4"HP w/o insl-5.5'd, 2500kcmil Cu-603A@76.0,603A@70.0
Date: 6/6/2011

No	Description	Unit	1
General cable information			
1	Cable type no		1
2	Number of cores		1
3	Voltage	kV	115
4	Conductor area	$inch^2$	1.9631
5	Maximum Steady-State Conductor Temperature	°C	90
6	Maximum Emergency Conductor Temperature	°C	110
Construction			
Conductor			
7	Material		copper
8	Resistivity @20°C	uΩ.cm	1.7241
9	Temperature coefficient	1/K	0.00393
10	Reciprocal of temperature coefficient of resistance (BETA)	°C	234.5
11	Volumetric specific heat (SH)	$J/K.m^3$	3.45
12	Construction		4 segments
13	Is cable dried?		No
14	ks (Skin effect coefficient)		0.44
15	kp (Proximity effect coefficient)		0.37
16	Diameter	inch	1.77
Conductor shield			
17	Is layer present?		Yes
18	Thickness	inch	0.05
19	Diameter	inch	1.87
Insulation			
20	Is layer present?		Yes
21	Material		XLPE (unfilled)
22	Thermal resistivity	K.m/w	3.5
23	Dielectric loss factor - (tan δ)		0.001
24	Relative permittivity (ε)		2.5
25	Thickness	inch	0.8
26	Diameter	inch	3.47
Insulation screen			
27	Is layer present?		Yes
28	Material		semi-conducting
29	Thickness	inch	0.05
30	Diameter	inch	3.57

Sheath

31	Is layer present?		Yes
32	Is around each core? (Only for Three core cable)		No
33	Material		copper
34	Resistivity @20°C	uΩ.cm	1.7241
35	Temperature coefficient	1/K	0.00393
36	Reciprocal of temperature coefficient of resistance (BETA)	°C	234.5
37	Volumetric specific heat (SH)	J/K.m^3	3.45
38	Corrugated construction		Corrugated
39	Thickness of the corrugated sheath	inch	0.03
40	Inner radius of the corrugated sheath	inch	1.91
41	Outer radius of the corrugated sheath	inch	2.035
42	Thickness	inch	0.25
43	Diameter	inch	4.07

Jacket

44	Is layer present?		Yes
45	Material		polyethylene
46	Thermal resistivity	K.m/w	3.5
47	Thickness	inch	0.155
48	Diameter	inch	4.38

Overall cable diameter

49	Diameter	inch	4.38

No	Description/Value	Unit	1
SPECIFIC INSTALLATION DATA			
Bonding			
1	1-CON, sheaths single point bonded, triang. configuration		Yes
Loss factor constant			
2	Loss factor constant		0.3
Duct construction			
3	PVC duct in concrete or buried		Yes
4	Resistivity (RH)		6
Cables touching			
5	Single conductor cables NOT touching		Yes

No	Symbol	Description	Unit	1	2	3	4	5	6
Temperature calculations									
1		Cable type no		1	1	1	1	1	1
2		Circuit no		1	1	1	2	2	2
3		Phase		A	B	C	A	B	C
4	θ_c	Conductor temperature	°C	75.4	76	72.7	70	66.9	66.1
5	θ_i	Sheath/Shield temperature	°C	72.3	72.9	69.6	66.9	63.9	63.1
6	θ_j	Armour/Pipe or Jacket temperature	°C	71.9	72.5	69.2	66.5	63.5	62.7
7	θ_s	Exterior duct temperature	°C	3.5	3.4	3.3	3.4	3.4	3.3
8	θ_a	Ambient temperature	°C	18	18	18	18	18	18

Cable type no: 1
Cable type: EXTRUDED
Cable ID: 115C2.5MX5
Cable title: 115KV 2500 KCMIL CU XLPE 800mil Southwire

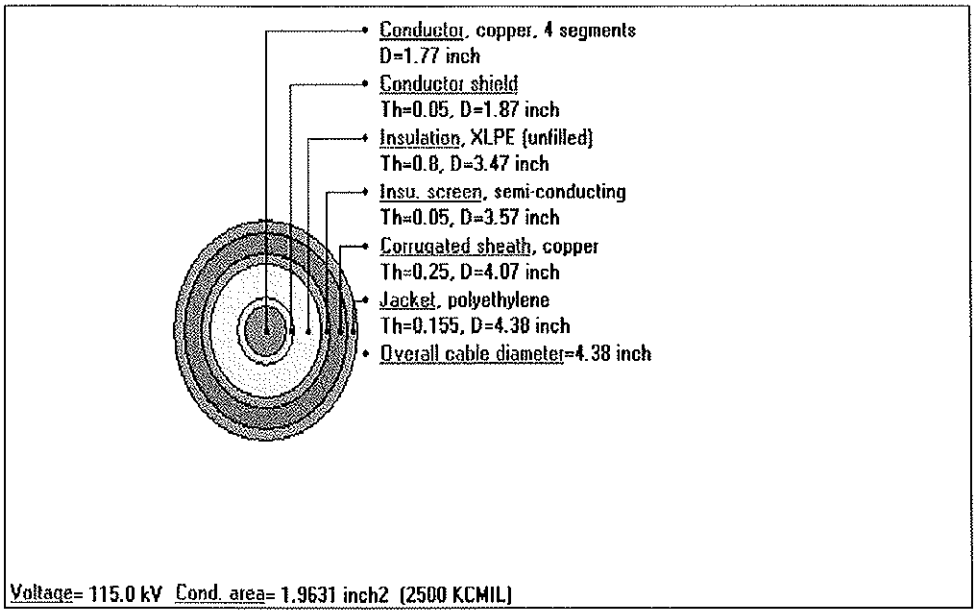

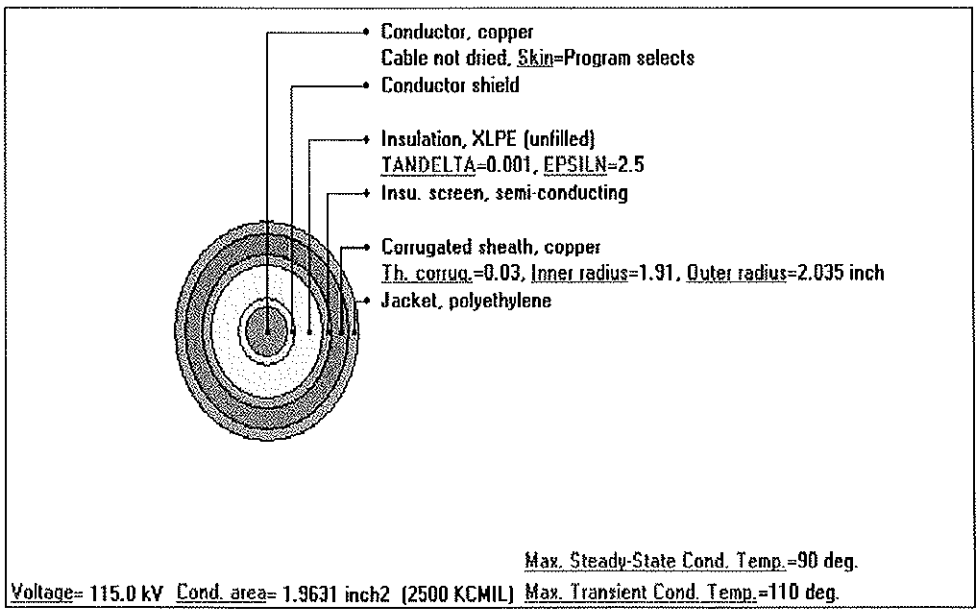

Summary Results

Study: MA-US-1&2 Yesler to Union Sub Ampacity Study, June 2011
Execution: B85-A-HPFF xing-12'd, 2500kcmil Cu-603A@48.7,603A@48.5
Date: 6/10/2011
Frequency: 60 Hz
Conductor Resistances: IEC-228
Fraction of conductor current returning through sheath for single phase cables: 1

Installation Type: Multiple Duct Banks Backfills

Parameter						Unit	Value
Ambient Soil Temperature at Installation Depth						°C	18
Thermal Resistivity of Native Soil						°C.m/W	1
Layers		Dimensions [ft]				Type	Thermal Resistivity [°C.m/W]
No.	Name	X Center	Y Center	Width	Height		
1	DB 2X4	0	13.229	3.458	2.458	Standard ductbank	0.6
2	Backfill	0	5.5	5	1.998	Backfill	0.75

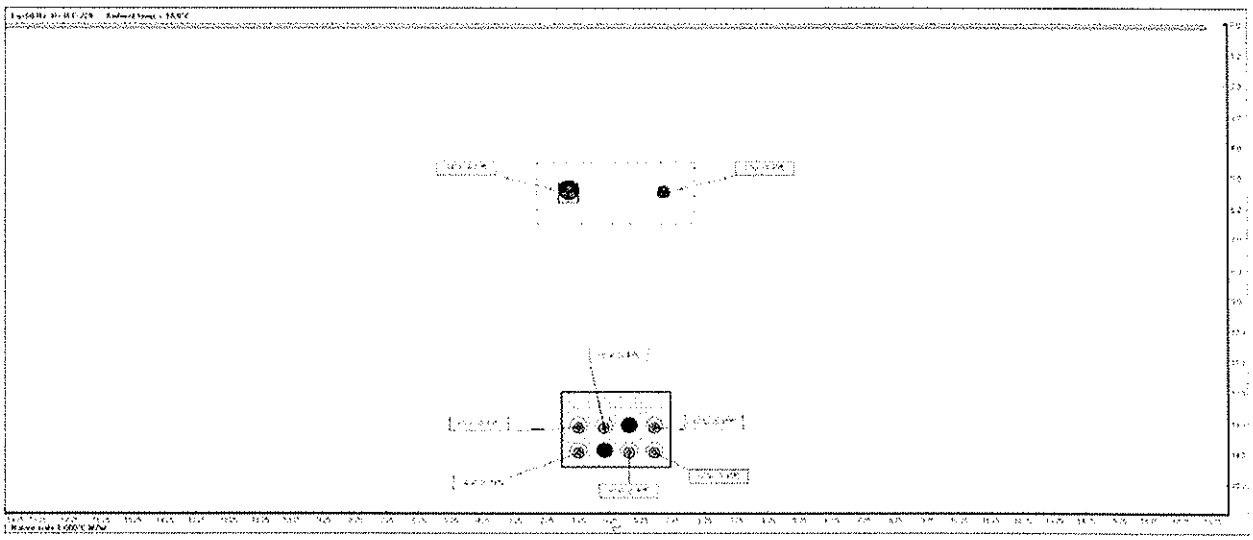

Summary Results

Solution converged

Cable\Cable type no	Circuit	Phase	Location		Load Factor	Temperature	Ampacity
			X[ft]	Y[ft]	[p.u.]	[°C]	[A]
1\1	1	A	-1.203	13.961	0.8	48	603
2\1	1	B	-1.203	13.159	0.8	48.6	603
3\1	1	C	-0.401	13.159	0.8	48.7	603
4\1	2	A	0.401	13.961	0.8	48.5	603
5\1	2	B	1.203	13.961	0.8	48.1	603
6\1	2	C	1.203	13.159	0.8	48	603
7\2	3	ABC	-1.5	5.5	0.75	72.6	941
8\3	4	ABC	1.5	5.5	0.8	49.1	226

Summary Results

Study: MA-US-1&2 Yesler to Union Sub Ampacity Study, June 2011
Execution: B85-C-HPFF xing-12'd, 2500kcmil Cu-603A@52.6,603A@51.9
Date: 6/10/2011
Frequency: 60 Hz
Conductor Resistances: IEC-228
Fraction of conductor current returning through sheath for single phase cables: 1

Installation Type: Multiple Duct Banks Backfills

Parameter						Unit	Value
Ambient Soil Temperature at Installation Depth						°C	18
Thermal Resistivity of Native Soil						°C.m/W	1
Layers		Dimensions [ft]				Type	Thermal Resistivity [°C.m/W]
No.	Name	X Center	Y Center	Width	Height		
1	DB 2X4	0	13.229	3.458	2.458	Standard ductbank	0.6
2	Backfill	0	5.5	5	1.998	Backfill	0.75
3	Backfill	-1.912	10.523	0.348	7.844	Backfill	8.333
4	Backfill	1.912	10.523	0.348	7.844	Backfill	8.333

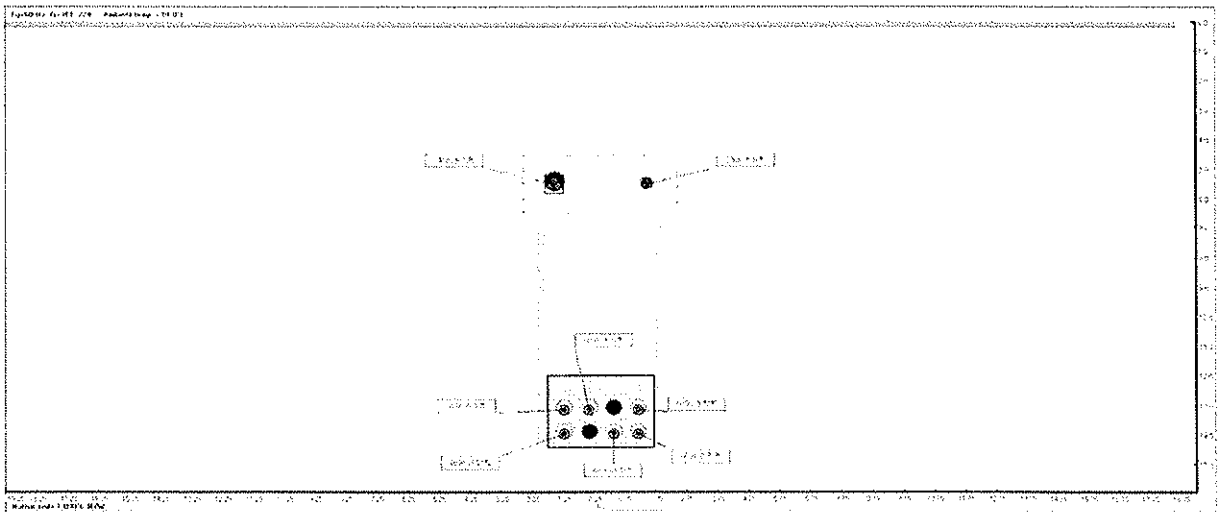

Summary Results

Solution converged

Cable\Cable type no	Circuit	Phase	Location		Load Factor	Temperature	Ampacity
			X[ft]	Y[ft]	[p.u.]	[°C]	[A]
1\1	1	A	-1.203	13.961	0.8	50.9	603
2\1	1	B	-1.203	13.159	0.8	52.6	603
3\1	1	C	-0.401	13.159	0.8	51.5	603
4\1	2	A	0.401	13.961	0.8	50.5	603
5\1	2	B	1.203	13.961	0.8	50.9	603
6\1	2	C	1.203	13.159	0.8	51.9	603
7\2	3	ABC	-1.5	5.5	0.75	73	941
8\3	4	ABC	1.5	5.5	0.8	49.5	226